INTERNATIONAL STANDARD

**ISO/IEC 15938-3**

First edition
2002-06-20

**AMENDMENT 1**
2004-08-01

# Information technology — Multimedia content description interface —

## Part 3: **Visual**

## AMENDMENT 1: Visual extensions

*Technologies de l'information — Interface de description du contenu multimédia —*

*Partie 3: Visuel*

*AMENDEMENT 1: Extensions visuelles*

Reference number
ISO/IEC 15938-3:2002/Amd.1:2004(E)

© ISO/IEC 2004

Copyright International Organization for Standardization
Provided by IHS under license with ISO
No reproduction or networking permitted without license from IHS

Not for Resale

**PDF disclaimer**

This PDF file may contain embedded typefaces. In accordance with Adobe's licensing policy, this file may be printed or viewed but shall not be edited unless the typefaces which are embedded are licensed to and installed on the computer performing the editing. In downloading this file, parties accept therein the responsibility of not infringing Adobe's licensing policy. The ISO Central Secretariat accepts no liability in this area.

Adobe is a trademark of Adobe Systems Incorporated.

Details of the software products used to create this PDF file can be found in the General Info relative to the file; the PDF-creation parameters were optimized for printing. Every care has been taken to ensure that the file is suitable for use by ISO member bodies. In the unlikely event that a problem relating to it is found, please inform the Central Secretariat at the address given below.

© ISO/IEC 2004

All rights reserved. Unless otherwise specified, no part of this publication may be reproduced or utilized in any form or by any means, electronic or mechanical, including photocopying and microfilm, without permission in writing from either ISO at the address below or ISO's member body in the country of the requester.

ISO copyright office
Case postale 56 • CH-1211 Geneva 20
Tel. + 41 22 749 01 11
Fax + 41 22 749 09 47
E-mail copyright@iso.org
Web www.iso.org

Published in Switzerland

Copyright International Organization for Standardization
Provided by IHS under license with ISO
No reproduction or networking permitted without license from IHS

© ISO/IEC 2004 – All rights reserved

Not for Resale

# Foreword

ISO (the International Organization for Standardization) and IEC (the International Electrotechnical Commission) form the specialized system for worldwide standardization. National bodies that are members of ISO or IEC participate in the development of International Standards through technical committees established by the respective organization to deal with particular fields of technical activity. ISO and IEC technical committees collaborate in fields of mutual interest. Other international organizations, governmental and non-governmental, in liaison with ISO and IEC, also take part in the work. In the field of information technology, ISO and IEC have established a joint technical committee, ISO/IEC JTC 1.

International Standards are drafted in accordance with the rules given in the ISO/IEC Directives, Part 2.

The main task of the joint technical committee is to prepare International Standards. Draft International Standards adopted by the joint technical committee are circulated to national bodies for voting. Publication as an International Standard requires approval by at least 75 % of the national bodies casting a vote.

Attention is drawn to the possibility that some of the elements of this document may be the subject of patent rights. ISO and IEC shall not be held responsible for identifying any or all such patent rights.

Amendment 1 to ISO/IEC 15938-3:2002 was prepared by Joint Technical Committee ISO/IEC JTC 1, *Information technology,* Subcommittee SC 29, *Coding of audio, picture, multimedia and hypermedia information.*

© ISO/IEC 2004 All rights reserved

Copyright International Organization for Standardization
Provided by IHS under license with ISO
No reproduction or networking permitted without license from IHS
Not for Resale

# Introduction

This document specifies the first Amendment to the Visual part of the ISO/IEC 15938 standard. The normative syntax of the Visual description tools is specified in this document using the Description Definition Language (DDL) and the normative semantics is specified using text.

The current set of relevant documents for the Visual description tools is given as follows:

ISO/IEC 15938-3 – Visual
ISO/IEC 15938-3/Amd.1 – Visual extensions
ISO/IEC TR 15938-8 – Extraction and use of MPEG-7 descriptions
ISO/IEC TR 15938-8/Amd.1 – Extensions of extraction and use of MPEG-7 descriptions


Copyright International Organization for Standardization
Provided by IHS under license with ISO
No reproduction or networking permitted without license from IHS
© ISO/IEC 2004 — All rights reserved
Not for Resale

# Information technology — Multimedia content description interface —

## Part 3: Visual

## AMENDMENT 1: Visual extensions

*Replace subclause 1.2 with:*

### 1.2. Overview of Visual Description Tools

This part of ISO/IEC 15938 specifies tools for description of visual content, including still images, video and 3D models. These tools are defined by their syntax in DDL and binary representations and semantics associated with the syntactic elements. They enable description of the visual features of the visual material, such as color, texture, shape and motion, as well as localization of the described objects in the image or video sequence. An overview of the visual description tools is shown in Figure 1.

The basic structure description tools include five supporting tools of visual descriptions defined in clauses 6-11. They are categorized into two groups, descriptor containers and basic supporting tools. The former consists of three datatypes, GridLayout providing efficient representations of visual features on grids, TimeSeries representing temporal arrays of several descriptions, GofGopFeature describes representative descriptions over video segment, and MultipleView describing a 3D object using several pictures captured from different view angles. The latter contains two tools, Spatial2DcoordinateSystem used to specify the 2D coordinate system and TemporalInterpolation indicating the interpolation method between two samples on a time axis.

The remaining description tools, except for the FaceRecognition descriptor, are associated with visual features and are grouped into five feature categories: Color, Texture, Shape, Motion and Localization.

The color description tools include five color descriptors to represent different aspects of color features: representative colors (DominantColor), color distribution (ScalableColor), spatial distribution of colors (ColorLayout and ColorStructure) and perceptual feeling of illumination color (ColorTemperature). It also contains three supporting tools, ColorSpace and ColorQuantization used in DominantColor and IlluminationInvariantColor to extend four color descriptors, DominantColor, ScalableColor, ColorLayout and ColorStructure, to support illumination invariant similarity matching. An extension of ScalableColor to a group of frames or pictures (GoFGoPColor) is also included in this group. All the color descriptors can be extracted from arbitrarily shaped regions.

The texture description tools facilitate browsing (TextureBrowsing) and similarity retrieval (HomogeneousTexture and EdgeHistogram) using the texture of a still or moving image region. All the texture descriptors can be extracted from arbitrarily shaped regions.

The shape description tools include two descriptors that characterize different shape features of a 2D object or region. The RegionShape descriptor captures the distribution of all pixels within a region and the Contour Shape descriptor characterizes the shape properties of the contour of an object. The extension of RegionShape is also defined as ShapeVariation to describe temporal variation of shape over video segment. The Shape3D descriptor provides an intrinsic shape characterization of 3D mesh models.

The motion description tools include four descriptors that characterize various aspects of motion. The CameraMotion descriptor specifies a set of basic camera operations such as, for example, panning and tilting. The motion of a key point (pixel) from a moving object or region can be characterized by the MotionTrajectory descriptor. The ParametricMotion descriptor characterizes an evolution of an arbitrarily shaped region over time in terms of a 2D geometric transformation. Finally, the MotionActivity descriptor captures the pace of the motion in the sequence, as perceived by the viewer. All motion descriptors except for CameraMotion can be extracted from arbitrarily shaped regions.

The localization description tools can be used to indicate regions of interest in the spatial (RegionLocator) and spatio-temporal (SpatioTemporalLocator) domains.

© ISO/IEC 2004 All rights reserved

Copyright International Organization for Standardization
Provided by IHS under license with ISO
No reproduction or networking permitted without license from IHS
Not for Resale

The FaceRecognition descriptor and the Advance Face Recognition descriptor are not associated with any particular visual feature and can be used to describe a human face for applications requiring the matching and retrieval of face images.

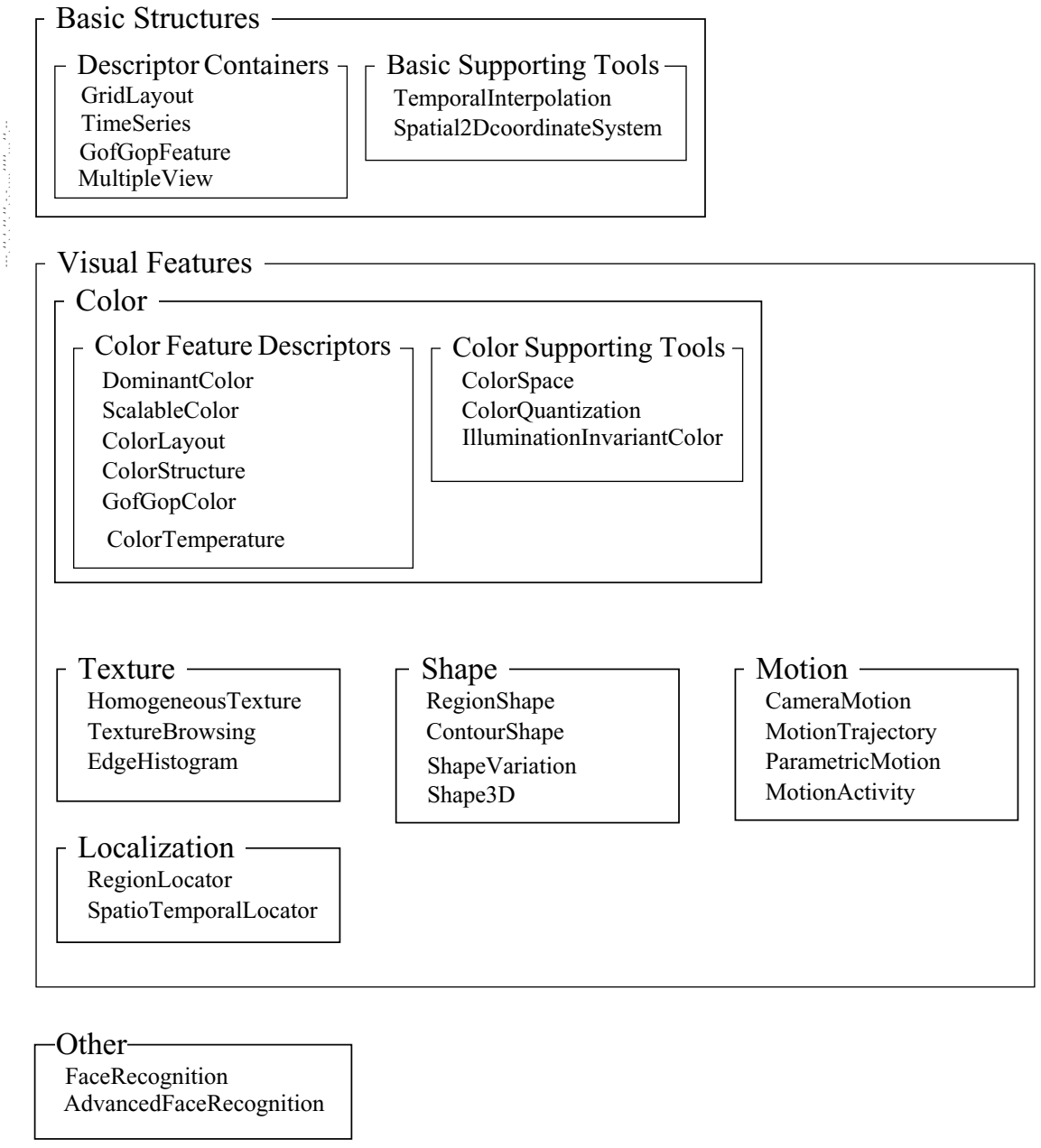


**Figure 1 - Overview of Visual Description Tools**

*Extend the definitions in subclause 3.2:*

NSVM Negative Shape Variation Map


© ISO/IEC 2004 — All rights reserved
Copyright International Organization for Standardization
Provided by IHS under license with ISO
No reproduction or networking permitted without license from IHS
Not for Resale

| | |
|---|---|
| SVM | Shape Variation Map |
| LDA | Linear Discriminant Analysis |
| PCA | Principal Component Analysis |
| PCLDA | Linear Discriminant Analysis of Principal Components |
| MIRED | MIcro REciprol Degree |

*Extend the definitions in subclause 3.3:*

| | |
|---|---|
| $\Re e[z]$ | Real part of a complex value $z$ |
| $\Im m[z]$ | Imaginary part of a complex value $z$ |

*Replace subclause 4.2.2 with:*

### 4.2.2 Generic binary representation

The use of the video-specific syntax is signaled using the codec configuration mechanism defined in ISO/IEC 15938-1 and the following classification scheme is defined for this purpose.

```
<ClassificationScheme uri="urn:mpeg:mpeg7:cs:VisualDescriptorCodecCS:2001">
   <Term termID="1">
      <Name xml:lang="en">MPEG7CameraMotion</Name>
      <Definition xml:lang="en">ISO/IEC 15938-3 Binary Camera Motion
            Codec</Definition>
   </Term>
   <Term termID="2">
      <Name xml:lang="en">MPEG7ColorLayout</Name>
      <Definition xml:lang="en">ISO/IEC 15938-3 Binary Color Layout
            Codec</Definition>
   </Term>
   <Term termID="3">
      <Name xml:lang="en">MPEG7ColorQuantization</Name>
      <Definition xml:lang="en">ISO/IEC 15938-3 Binary Color Quantization
            Codec</Definition>
   </Term>
   <Term termID="4">
      <Name xml:lang="en">MPEG7ColorSpace</Name>
      <Definition xml:lang="en">ISO/IEC 15938-3 Binary Color Space
            Codec</Definition>
   </Term>
   <Term termID="5">
      <Name xml:lang="en">MPEG7ColorStructure</Name>
      <Definition xml:lang="en">ISO/IEC 15938-3 Binary Color Structure
            Codec</Definition>
   </Term>
   <Term termID="6">
      <Name xml:lang="en">MPEG7ContourShape</Name>
      <Definition xml:lang="en">ISO/IEC 15938-3 Binary Contour Shape
            Codec</Definition>
```

© ISO/IEC 2004 All rights reserved
Copyright International Organization for Standardization
Provided by IHS under license with ISO
No reproduction or networking permitted without license from IHS
Not for Resale

```
    </Term>
    <Term termID="7">
        <Name xml:lang="en">MPEG7DominantColor</Name>
        <Definition xml:lang="en">ISO/IEC 15938-3 Binary Dominant Color
              Codec</Definition>
    </Term>
    <Term termID="8">
        <Name xml:lang="en">MPEG7EdgeHistogram</Name>
        <Definition xml:lang="en">ISO/IEC 15938-3 Binary Edge Histogram
              Codec</Definition>
    </Term>
    <Term termID="9">
        <Name xml:lang="en">MPEG7FaceRecognition</Name>
        <Definition xml:lang="en">ISO/IEC 15938-3 Binary Face Recognition
              Codec</Definition>
    </Term>
    <Term termID="10">
        <Name xml:lang="en">MPEG7FoFGoPColor</Name>
        <Definition xml:lang="en">ISO/IEC 15938-3 Binary GoFGoP Color
              Codec</Definition>
    </Term>
    <Term termID="11">
        <Name xml:lang="en">MPEG7GridLayout</Name>
        <Definition xml:lang="en">ISO/IEC 15938-3 Binary Grid Layout
              Codec</Definition>
    </Term>
    <Term termID="12">
        <Name xml:lang="en">MPEG7HomogeneousTexture</Name>
        <Definition xml:lang="en">ISO/IEC 15938-3 Binary Homogeneous Texture
              Codec</Definition>
    </Term>
    <Term termID="13">
        <Name xml:lang="en">MPEG7IrregularVisualTimeSeries</Name>
        <Definition xml:lang="en">ISO/IEC 15938-3 Binary Irregular Time Series
              Codec</Definition>
    </Term>
    <Term termID="14">
        <Name xml:lang="en">MPEG7MotionActivity</Name>
        <Definition xml:lang="en">ISO/IEC 15938-3 Binary Motion Activity
              Codec</Definition>
    </Term>
    <Term termID="15">
        <Name xml:lang="en">MPEG7MotionTrajectory</Name>
        <Definition xml:lang="en">ISO/IEC 15938-3 Binary Motion Trajectory
              Codec</Definition>
    </Term>
    <Term termID="16">
        <Name xml:lang="en">MPEG7MultipleView</Name>
        <Definition xml:lang="en">ISO/IEC 15938-3 Binary Multiple View
              Codec</Definition>
    </Term>
    <Term termID="17">
        <Name xml:lang="en">MPEG7ParametricMotion</Name>
        <Definition xml:lang="en">ISO/IEC 15938-3 Binary Parametric Motion
              Codec</Definition>
    </Term>
    <Term termID="18">
        <Name xml:lang="en">MPEG7RegionLocator</Name>
        <Definition xml:lang="en">ISO/IEC 15938-3 Binary Region Locator
              Codec</Definition>
```



--`,,```,,,,````-`-`,,`,,`,`,,`---

Copyright International Organization for Standardization
Provided by IHS under license with ISO
No reproduction or networking permitted without license from IHS

© ISO/IEC 2004 — All rights reserved

Not for Resale

```
    </Term>
    <Term termID="19">
       <Name xml:lang="en">MPEG7RegionShape</Name>
       <Definition xml:lang="en">ISO/IEC 15938-3 Binary Region Shape
             Codec</Definition>
    </Term>
    <Term termID="20">
       <Name xml:lang="en">MPEG7RegularVisualTimeSeries</Name>
       <Definition xml:lang="en">ISO/IEC 15938-3 Binary Regular Time Series
             Codec</Definition>
    </Term>
    <Term termID="21">
       <Name xml:lang="en">MPEG7ScalableColor</Name>
       <Definition xml:lang="en">ISO/IEC 15938-3 Binary Scalable Color
             Codec</Definition>
    </Term>
    <Term termID="22">
       <Name xml:lang="en">MPEG7Shape3D</Name>
       <Definition xml:lang="en">ISO/IEC 15938-3 Binary Shape 3D
             Codec</Definition>
    </Term>
    <Term termID="23">
       <Name xml:lang="en">MPEG7Spatial2DCoordinateSystem</Name>
       <Definition xml:lang="en">ISO/IEC 15938-3 Binary Spatial 2D Coordinate
             System Codec</Definition>
    </Term>
    <Term termID="24">
       <Name xml:lang="en">MPEG7SpatioTemporalLocator</Name>
       <Definition xml:lang="en">ISO/IEC 15938-3 Binary SpatioTemporal Locator
             Codec</Definition>
    </Term>
    <Term termID="25">
       <Name xml:lang="en">MPEG7TemporalInterpolation</Name>
       <Definition xml:lang="en">ISO/IEC 15938-3 Binary Temporal Interpolation
             Codec</Definition>
    </Term>
    <Term termID="26">
       <Name xml:lang="en">MPEG7TextureBrowsing</Name>
       <Definition xml:lang="en">ISO/IEC 15938-3 Binary Texture Browsing
             Codec</Definition>
    </Term>
    <Term termID="27">
       <Name xml:lang="en">MPEG7GofGopFeature</Name>
       <Definition xml:lang="en">ISO/IEC 15938-3 Binary Gof Gop Feature
Codec</Definition>
    </Term>
    <Term termID="28">
       <Name xml:lang="en">MPEG7ColorTemperature</Name>
       <Definition xml:lang="en">ISO/IEC 15938-3 Binary Color Temperature
Codec</Definition>
    </Term>
    <Term termID="29">
       <Name xml:lang="en">MPEG7ShapeVariation</Name>
       <Definition xml:lang="en">ISO/IEC 15938-3 Binary Shape Variation
Codec</Definition>
    </Term>
    <Term termID="30">
       <Name xml:lang="en">MPEG7IlluminationInvariantColor</Name>
       <Definition xml:lang="en">ISO/IEC 15938-3 Binary Illumination Invariant
Color Codec</Definition>
```

--`,,```,,,,````-`-,,`,,`,`,,`---
© ISO/IEC 2004 All rights reserved
Copyright International Organization for Standardization
Provided by IHS under license with ISO
No reproduction or networking permitted without license from IHS
Not for Resale

```
    </Term>
    <Term termID="31">
        <Name xml:lang="en">MPEG7AdvancedFaceRecognition</Name>
        <Definition xml:lang="en">ISO/IEC 15938-3 Binary Advanced Face Recognition
Codec</Definition>
    </Term>
</ClassificationScheme>
```

*Replace Table 1 in subclause 5.2.4 with:*

**Table 1 – Assignment of IDs to descriptors**

| ID | Descriptor |
|---|---|
| 0 | Forbidden |
| 1 | CameraMotion |
| 2 | ColorLayout |
| 3 | ColorSpace |
| 4 | ColorStructure |
| 5 | ColorQuantization |
| 6 | ContourShape |
| 7 | DominantColor |
| 8 | EdgeHistogram |
| 9 | FaceRecognition |
| 10 | GoFGoPColor |
| 11 | GridLayout |
| 12 | HomogeneousTexture |
| 13 | IrregularVisualTimeSeries |
| 14 | MotionActivity |
| 15 | MotionTrajectory |
| 16 | MultipleView |
| 17 | ParametricMotion |
| 18 | RegionLocator |
| 19 | RegionShape |
| 20 | RegularVisualTimeSeries |
| 21 | ScalableColor |
| 22 | Shape3D |
| 23 | Spatial2DCoordinateSystem |
| 24 | SpatioTemporalLocator |
| 25 | TemporalInterpolation |
| 26 | TextureBrowsing |
| 27 | GofGopFeature |
| 28 | ColorTemperature |
| 29 | ShapeVariation |
| 30 | IlluminationInvariantColor |
| 31 | AdvancedFaceRecognition |
| 32-255 | Reserved |

*Add after subclause 5.6:*

## 5.7 GofGopFeature

### 5.7.1 Introduction

This container is a generic and extensible container to use several description tools defined in ISO/IEC 15938-3 to describe the representative feature over Group of Frames (GoF)/Group of Pictures (GoP). For the use to describe the transition of the feature through a video frame, VisualTimeSeries is much preferable.


© ISO/IEC 2004 — All rights reserved
Copyright International Organization for Standardization
Provided by IHS under license with ISO
No reproduction or networking permitted without license from IHS
Not for Resale

### 5.7.2 DDL representation syntax

```
<!-- ################################################ -->
<!--  Definition of MPEG-7 GofGopFeature                -->
<!-- ################################################ -->
<complexType name="GofGopFeature">
   <sequence>
      <element name="Descriptor" xsi:type="mpeg7:VisualDType"/>
   <sequence>
   <attribute name="aggregation" use="optional">
   <simpleType>
      <restriction base="string">
         <enumeration value="Average"/>
         <enumeration value="Median"/>
         <enumeration value="SplitMerge"/>
      </restriction>
   </simpleType>
   </attribute>
</complexType>
```

### 5.7.3 Binary representation syntax

| GofGopFeature { | **Number of bits** | **Mnemonic** |
|---|---|---|
| **AggregationFlag** | 1 | bsbf |
| if(AggregationFlag){ | | |
| **AggregationType** | 3 | bsbf |
| } | | |
| **DescriptorID** | 8 | uimsbf |
| **SizeOfDescriptor** | 8 | uimsbf |
| **Descriptor** | see subclauses 5 to 8 | bsbf |
| } | | |

### 5.7.4 Descriptor component semantics

**DescriptorID**
This field, which is only present in the binary representation, specifies a descriptor identifier. The descriptor identifier indicates the descriptor type accommodated in this container. The assignment of IDs to the descriptors is specified in Table 1 in subclause 5.2.4. The available value of this field is 2 for Color Layout, 7 for Dominant Color, 8 for Edge Histogram, and 12 for Homogeneous Texture. The other values are prohibited.

**SizeOfDescriptor**
This field, which is only present in the binary representation, specifies a size of following descriptor in bytes.

**Descriptor**
This element represents the elementary feature using several description tools defined in ISO/IEC 15938-3. The applicable tools are Dominant Color, Color Layout, Edge Histogram and Homogeneous Texture which are specified in subclause 6.4, 6.6, 7.4 and 7.2, respectively. The size of this element shall be a multiple of 8 bits, and be equal to the value of SizeOfDescriptor element in bits. For the alignment of byte boundary, '0' bits should be staffed just after the Descriptor bitstream.

**AggregationFlag**
This field signals the presence of aggregation attribute. If it is set to "1", the aggregation attribute is following.

© ISO/IEC 2004 All rights reserved
Copyright International Organization for Standardization
Provided by IHS under license with ISO
No reproduction or networking permitted without license from IHS
Not for Resale

**aggregation**
This optional field specifies the aggregation method to create representative feature from the ones extracted from group of frames/pictures. The aggregation is performed over all the elementary descriptions of the group of video frames or images. One of the three types of aggregation presented below is allowed. If the aggregation is not explicitly specified, one of the allowed aggregation methods for the embeded descriptor is used.

**Average**
The average aggregation means that each element of the Descriptor is computed by accumulating the corresponding elements over group of frame/picture and subsequently normalizing each accumulated value by the number of the frames/pictures.

**Median**
The median aggregation means that each element of the Descriptor is obtained by constructing the ascending list of element values over the frame/picture, and assigning the median of this list to the representative value.

**SplitMerge**
The SplitMerge aggregation is allowed to be used only for Dominant Color. When this method is used, the descriptors are first extracted from all frames/pictures and then merged into a single descriptor consisting of all representative color values ("Value" elements in subclause 6.3). The size of the resulting descriptor is then brought down to the limit imposed by the syntax of DominantColor descriptor by iterative merging of the closest dominant color "Value" elements, where closeness is defined by Euclidean distance in color space. The values of the merged "Value" element fields are as follows:

$$W = \frac{w_1 + w_2}{N}$$

$$M = \frac{w_1 * m_1 + w_2 * m_2}{w_1 + w_2}$$

$$V = \frac{w_1 * v_1 + w_2 * v_2}{w_1 + w_2} + \frac{w_1 * w_2 * (m_1 - m_2)^2}{(w_1 + w_2)^2}$$

Where $W$ , $M$ , and $V$ are the values of the "Percentage", "Index", and "ColorVariance" fields of the merged "Value" element, $w_1$, $w_2$, $m_1$, $m_2$, and $v_1$, $v_2$ are the corresponding fields of the elements being merged and $N$ is the total number of frame/pictures. If SpatialCoherency field is used, it is simply averaged over all frames/pictures.

Note, the use of some of the aggregation methods is prohibited. The applicable methods for each description tool are specified using "Y" mark in Table Amd1-1.

**Table Amd1-1 - Applicable Aggregation Methods**

| Description Tools | Average | Medium | SplitMerge |
|---|---|---|---|
| Color Layout | Y | Y | n/a |
| Edge Histogram | Y | Y | n/a |
| Homogeneous Texture | Y | Y | n/a |
| Dominant Color | n/a | n/a | Y |


Copyright International Organization for Standardization
Provided by IHS under license with ISO
No reproduction or networking permitted without license from IHS
© ISO/IEC 2004 — All rights reserved
Not for Resale

In the binary description, the following mapping table is used

| AggregationType | Aggregation |
|---|---|
| 000 | Reserved |
| 001 | Average |
| 010 | Medium |
| 011 | SplitMerge |
| 100-111 | Reserved |

*Add after subclause 6.8:*

## 6.9 Color Temperature

### 6.9.1 Introduction

This descriptor specifies the perceptual temperature feeling of illumination color in an image for browsing and display preference control purposes. Four perceptual temperature browsing categories are provided; hot, warm, moderate, and cool. Each category is used for browsing images based upon its perceptual meaning. This descriptor can be used to control the display quality of images or videos to either warmer or cooler direction so as to gratify user's preference.

### 6.9.2 DDL representation syntax

```
<!-- ################################################-->
<!--  Definition of MPEG-7 ColorTemperatureType      -->
<!-- ################################################-->

<complexType name="ColorTemperatureType" final="#all">
 <complexContent>
  <extension base="mpeg7:VisualDType">
   <sequence>
      <element name="BrowsingCategory">
         <simpleType>
            <restriction base="string">
               <enumeration value="hot"/>
               <enumeration value="warm"/>
               <enumeration value="moderate"/>
               <enumeration value="cool"/>
            </restriction>
         </simpleType>
      </element>
      <element name="SubRangeIndex" type="mpeg7:unsigned6"/>
   </sequence>
  </extension>
 </complexContent>
</complexType>
```

### 6.9.3 Binary representation syntax

| ColorTemperature { | **Number of bits** | **Mnemonic** |
|---|---|---|
| **BrowsingCategory** | 2 | bslbf |
| **SubRangeIndex** | 6 | uimsbf |
| } | | |

© ISO/IEC 2004 All rights reserved
Copyright International Organization for Standardization
Provided by IHS under license with ISO
No reproduction or networking permitted without license from IHS
Not for Resale

### 6.9.4 Descriptor component semantics

**BrowsingCategory**
This element specifies the category of perceptual temperature. The color temperature in the range from 1667K (Kelvin) to 25000K estimates the illumination color of an image. The temperture value out of this range shall be clipped to the corresponding range boundary value. A color temperature value is rounded with the first digit under the decimal pointto be an integer. This color temperature range is divided and mapped into the 4 corresponding categories as defined in Table Amd1-2. The mapping between binary representation and semantics is also provided in Table Amd1-2.

**Table Amd1-2- Semantics of the Browsing Category field**

| Browsing Category | Semantics | Temperature Range |
|---|---|---|
| 00 | Hot | Temperature < 2251K |
| 01 | Warm | 2251K ≤ Temperature < 4171K |
| 10 | Moderate | 4171K ≤ Temperature < 8061K |
| 11 | Cool | 8061K ≤ Temperature |

**SubrangeIndex**
This element specifies the sub-range index inside each browsing category. The temperature range for each category is uniformly quantized into 64 sub-ranges in MIRED ($M/K^{-1}$). The color temperature range corresponding to each subrangeindex is provided in Table Amd1-3. A color temperature value is rounded with the first digit under the decimal point to be an integer.

**Table Amd1-3 - SubrangeIndex and its color temperature range for each category**

| Index | Hot | Warm | Moderate | Cool |
|---|---|---|---|---|
| 000000 | [1667,1674) | [2251,2267) | [4171,4203) | [8061,8147) |
| 000001 | [1674,1681) | [2267,2284) | [4203,4235) | [8147,8235) |
| 000010 | [1681,1687) | [2284,2301) | [4235,4268) | [8235,8325) |
| 000011 | [1687,1694) | [2301,2318) | [4268,4301) | [8325,8417) |
| 000100 | [1694,1701) | [2318,2335) | [4301,4334) | [8417,8512) |
| 000101 | [1701,1709) | [2335,2352) | [4334,4369) | [8512,8608) |
| 000110 | [1709,1716) | [2352,2370) | [4369,4403) | [8608,8706) |
| 000111 | [1716,1723) | [2370,2388) | [4403,4439) | [8706,8807) |
| 001000 | [1723,1730) | [2388,2407) | [4439,4475) | [8807,8910) |
| 001001 | [1730,1737) | [2407,2425) | [4475,4511) | [8910,9015) |
| 001010 | [1737,1745) | [2425,2444) | [4511,4548) | [9015,9123) |
| 001011 | [1745,1752) | [2444,2464) | [4548,4586) | [9123,9234) |
| 001100 | [1752,1760) | [2464,2483) | [4586,4624) | [9234,9347) |
| 001101 | [1760,1767) | [2483,2503) | [4624,4663) | [9347,9464) |
| 001110 | [1767,1775) | [2503,2523) | [4663,4703) | [9464,9583) |
| 001111 | [1775,1782) | [2523,2544) | [4703,4743) | [9583,9705) |
| 010000 | [1782,1790) | [2544,2564) | [4743,4784) | [9705,9830) |
| 010001 | [1790,1798) | [2564,2586) | [4784,4826) | [9830,9959) |
| 010010 | [1798,1806) | [2586,2607) | [4826,4868) | [9959,10091) |
| 010011 | [1806,1814) | [2607,2629) | [4868,4912) | [10091,10226) |
| 010100 | [1814,1822) | [2629,2651) | [4912,4956) | [10226,10366) |
| 010101 | [1822,1830) | [2651,2674) | [4956,5000) | [10366,10509) |
| 010110 | [1830,1838) | [2674,2697) | [5000,5046) | [10509,10656) |
| 010111 | [1838,1846) | [2697,2720) | [5046,5092) | [10656,10807) |
| 011000 | [1846,1855) | [2720,2744) | [5092,5140) | [10807,10962) |
| 011001 | [1855,1863) | [2744,2769) | [5140,5188) | [10962,11123) |


© ISO/IEC 2004 — All rights reserved
Copyright International Organization for Standardization
Provided by IHS under license with ISO
No reproduction or networking permitted without license from IHS
Not for Resale

| | | | | |
|---|---|---|---|---|
| 011010 | [1863,1872) | [2769,2793) | [5188,5237) | [11123,11287) |
| 011011 | [1872,1880) | [2793,2818) | [5237,5287) | [11287,11457) |
| 011100 | [1880,1889) | [2818,2844) | [5287,5338) | [11457,11632) |
| 011101 | [1889,1897) | [2844,2870) | [5338,5390) | [11632,11813) |
| 011110 | [1897,1906) | [2870,2897) | [5390,5443) | [11813,11999) |
| 011111 | [1906,1915) | [2897,2924) | [5443,5497) | [11999,12191) |
| 100000 | [1915,1924) | [2924,2951) | [5497,5552) | [12191,12389) |
| 100001 | [1924,1933) | [2951,2979) | [5552,5609) | [12389,12594) |
| 100010 | [1933,1942) | [2979,3008) | [5609,5666) | [12594,12806) |
| 100011 | [1942,1951) | [3008,3037) | [5666,5725) | [12806,13025) |
| 100100 | [1951,1961) | [3037,3067) | [5725,5785) | [13025,13252) |
| 100101 | [1961,1970) | [3067,3097) | [5785,5846) | [13252,13487) |
| 100110 | [1970,1980) | [3097,3128) | [5846,5908) | [13487,13730) |
| 100111 | [1980,1989) | [3128,3160) | [5908,5972) | [13730,13982) |
| 101000 | [1989,1999) | [3160,3192) | [5972,6037) | [13982,14244) |
| 101001 | [1999,2009) | [3192,3225) | [6037,6104) | [14244,14515) |
| 101010 | [2009,2018) | [3225,3259) | [6104,6172) | [14515,14797) |
| 101011 | [2018,2028) | [3259,3293) | [6172,6241) | [14797,15090) |
| 101100 | [2028,2038) | [3293,3328) | [6241,6313) | [15090,15396) |
| 101101 | [2038,2049) | [3328,3364) | [6313,6385) | [15396,15713) |
| 101110 | [2049,2059) | [3364,3400) | [6385,6460) | [15713,16044) |
| 101111 | [2059,2069) | [3400,3437) | [6460,6536) | [16044,16390) |
| 110000 | [2069,2080) | [3437,3476) | [6536,6615) | [16390,16750) |
| 110001 | [2080,2090) | [3476,3515) | [6615,6695) | [16750,17127) |
| 110010 | [2090,2101) | [3515,3554) | [6695,6777) | [17127,17521) |
| 110011 | [2101,2112) | [3554,3595) | [6777,6861) | [17521,17934) |
| 110100 | [2112,2122) | [3595,3637) | [6861,6947) | [17934,18367) |
| 110101 | [2122,2133) | [3637,3680) | [6947,7035) | [18367,18821) |
| 110110 | [2133,2145) | [3680,3724) | [7035,7126) | [18821,19298) |
| 110111 | [2145,2156) | [3724,3768) | [7126,7219) | [19298,19799) |
| 111000 | [2156,2167) | [3768,3814) | [7219,7314) | [19799,20328) |
| 111001 | [2167,2179) | [3814,3861) | [7314,7412) | [20328,20886) |
| 111010 | [2179,2190) | [3861,3910) | [7412,7513) | [20886,21475) |
| 111011 | [2190,2202) | [3910,3959) | [7513,7616) | [21475,22098) |
| 111100 | [2202,2214) | [3959,4010) | [7616,7722) | [22098,22758) |
| 111101 | [2214,2226) | [4010,4062) | [7722,7832) | [22758,23459) |
| 111110 | [2226,2238) | [4062,4115) | [7832,7944) | [23459,24205) |
| 111111 | [2238,2251) | [4115,4171) | [7944,8061) | [24205,25001) |

## 6.10 Illumination Invariant Color

### 6.10.1 Introduction

This descriptor wraps the color descriptors in ISO/IEC 15938-3 that are Dominant Color, Scalable Color, Color Layout, and Color Structure. Before extracting one of the DominantColor, ScalableColor, ColorLayout, and ColorStructure from an image, the pixel values shall be converted using a tranformation which correspons to changing the illumination to 6500K on the daylight locus.

--`,,```,,,,````-`-`,,`,,`,`,,`---

© ISO/IEC 2004 All rights reserved

Copyright International Organization for Standardization
Provided by IHS under license with ISO
No reproduction or networking permitted without license from IHS
Not for Resale

### 6.10.2 DDL representation syntax

```
<!-- ################################################ -->
<!-- Definition of MPEG-7 IlluminationInvariantColorType -->
<!-- ################################################ -->
<complexType name="IlluminationInvariantColorType" >
   <choice>
      <element name="DominantColor" type="mpeg7:DominantColorType"/>
      <element name="ScalableColor" type="mpeg7:ScalableColorType"/>
      <element name="ColorLayout" type="mpeg7:ColorLayoutType"/>
      <element name="ColorStructure" type="mpeg7:ColorStructureType"/>
   </choice>
</complexType>
```

### 6.10.3 Binary representation syntax

| IlluminationInvariantColor { | **Number of bits** | **Mnemonic** |
|---|---|---|
| **DescriptorID** | **8** | **uimsbf** |
| **SizeOfDescriptor** | **8** | **uimsbf** |
| **Descriptor** | **see subclauses 6.4 to 6.7** | **bsbf** |
| } | | |

### 6.10.4 Descriptor component semantics

**DescriptorID**
This field, which is only present in the binary representation, specifies a descriptor identifier. The descriptor identifier indicates the descriptor type accommodated in this container. The assignment of IDs to the descriptors is specified in Table 1 in subclause 5.2.4. The available value of this field is 2 for Color Layout, 4 for Color Structure, 7 for Dominant Color, 21 for Scalable Color. The other values are prohibited.

**SizeOfDescriptor**
This field, which is only present in the binary representation, specifies a size of following descriptor in bytes.

**Descriptor**
This element represents the elementary feature using several description tools defined in ISO/IEC 15938-3. The applicable tools are Dominant Color, Scalable Color, Color Layout, and Color Structure which are specified in subclause 6.4, 6.5, 6.6, and 6.7, respectively. If DominantColor is instantiated in this tool, the ColorReferenceFlag shall be set to the default value. The size of this element shall be a multiple of 8 bits, and be equal to the value of **SizeOfDescriptor** element in bits. For the alignment of byte boundary, '0' bits should be staffed just after the **Descriptor** bitstream.


© ISO/IEC 2004 — All rights reserved
Copyright International Organization for Standardization
Provided by IHS under license with ISO
No reproduction or networking permitted without license from IHS
Not for Resale

*Add after subclause 8.4:*

## 8.5 Shape Variation

The descriptor can describe shape variations in terms of Shape Variation Map and the statistics of the region shape description of each binary shape image in the collection. Shape Variation Map consists of StaticShapeVariation and DynamicShapeVariation. The former corresponds to 35 quantized ART coefficients on a 2-dimensional histogram of group of shape images and the latter to the inverse of the histogram except the background. For the statistics, a set of standard deviations of 35 coefficients of the Region Shape, which is defined in ISO/IEC 15938-3 are used.

### 8.5.1 DDL representation syntax

```
<!-- ################################################ -->
<!--  Definition of MPEG-7 ShapeVariationType   -->
<!-- ################################################ -->

<complexType name="ShapeVariationType" final="#all">
   <complexContent>
      <extension base="mpeg7:VisualDType">
         <sequence>
            <element name="StaticShapeVariation">
               <simpleType>
                  <restriction>
                     <simpleType>
                        <list itemType="mpeg7:unsigned4"/>
                     </simpleType>
                     <length value="35"/>
                  </restriction>
               </simpleType>
            </element>
            <element name="DynamicShapeVariation">
               <simpleType>
                  <restiction>
                     <simpleType>
                        <list itemType="mpeg7:unsigned4"/>
                     </simpleType>
                     <length value="35"/>
                  </restriction>
               </simpleType>
            </element>
            <element name="StatisticalVariation">
               <simpleType>
                  <resitiction>
                     <simpleType>
                        <list itemType="mpeg7:unsigned4"/>
                     </simpleType>
                     <length value="35"/>
                  </restriction>
               </simpleType>
            </element>
         </sequence>
      </extension>
   </complexContent>
</complexType>
```

© ISO/IEC 2004 All rights reserved
Copyright International Organization for Standardization
Provided by IHS under license with ISO
No reproduction or networking permitted without license from IHS
Not for Resale

### 8.5.2 Binary representation syntax

| Shape Variation { | **Number of bits** | **Mnemonic** |
|---|---|---|
| for( k=0; k<35; k++) { | | |
| **StaticShapeVariation[k]** | 4 | uimsbf |
| } | | |
| for( k=0; k<35; k++) { | | |
| **DynamicShapeVariation[k]** | 4 | uimsbf |
| } | | |
| for( k=0; k<35; k++) { | | |
| **StatisticalVariation[k]** | 4 | uimsbf |
| } | | |
| } | | |

### 8.5.3 Descriptor component semantics

**StaticShapeVariation**
This is an array of 35 normalized and quantized magnitudes of the ART coefficients on the accumulated binary shape images (called Shape Variation Map: SVM) which can be considered as a two-dimensional histogram. The number of each bin in the histogram corresponds to the frequency how often the object appears at the pixel location throughout the sequence. The maximum number in the bin implies that a part of the object appears at the location all the time, or becomes static through out the whole sequence. Higher is the value of a pixel in SVM, the degree of being static of the object at the pixel location. Hence the name StaticShapeVariation is used for the array to describe the histogram. The relationship between the order of k and the order of radial and angular indices (n,m) is as follows:

| k | 0 | 1 | 2 | 3 | 4 | 5 | 6 | … | 31 | 32 | 33 | 34 |
|---|---|---|---|---|---|---|---|---|---|---|---|---|
| n | 1 | 2 | 3 | 0 | 1 | 2 | 3 | … | 0 | 1 | 2 | 3 |
| m | 0 | 0 | 0 | 1 | 1 | 1 | 1 | … | 8 | 8 | 8 | 8 |

StaticShapeVariation[k] is obtained by quantizing of the ART coefficient into 4 bits. Quantization range and reconstruction values are listed in Table Amd1-4 and Table Amd1-, respectively.

**DynamicShapeVariation**
Similar to the StaticShapeVariation, this is an array of 35 normalized and quantized magnitudes of the region shape coefficients on the inverted cumulated image (NSVM: Negative Shape Variation Map) or 2-D histogram except the background. Hence the term DynamicShapeVariation is used to contrast with the StaticShapeVariation. Normalization, quantization and indexing scheme are the same as in StaticShapeVariation.

**StatisticalVariation**
This is an array of 35 quantized values of the set of standard deviations of each coefficients described by the region shape descriptor in each frame. Quantization and indexing scheme are the same as in StaticShapeVariation.

**Table Amd1-4 - Quantization table**

| Range | index |
|---|---|
| 0.000000000 ≤ value < 0.003073263 | 0000 |
| 0.003073263 ≤ value < 0.006358638 | 0001 |
| 0.006358638 ≤ value < 0.009887589 | 0010 |
| 0.009887589 ≤ value < 0.013699146 | 0011 |
| 0.013699146 ≤ value < 0.017842545 | 0100 |
| 0.017842545 ≤ value < 0.022381125 | 0101 |


--`,,```,,,,````-`-`,,`,,`,`,,`---
© ISO/IEC 2004 — All rights reserved
Copyright International Organization for Standardization
Provided by IHS under license with ISO
No reproduction or networking permitted without license from IHS
Not for Resale

| | |
|---|---|
| 0.022381125 ≤ value < 0.027398293 | 0110 |
| 0.027398293 ≤ value < 0.033007009 | 0111 |
| 0.033007009≤ value < 0.039365646 | 1000 |
| 0.039365646≤ value < 0.046706155 | 1001 |
| 0.046706155≤ value < 0.055388134 | 1010 |
| 0.055388134≤ value < 0.066014017 | 1011 |
| 0.066014017≤ value < 0.079713163 | 1100 |
| 0.079713163≤ value < 0.099021026 | 1101 |
| 0.099021026≤ value < 0.132028034 | 1110 |
| 0.132028034≤ value | 1111 |

**Table Amd1-5 - Reconstruction value for 4bit quantized value**

| Quantization index | Reconstruction value |
|---|---|
| 0000 | 0.001511843 |
| 0001 | 0.004687623 |
| 0010 | 0.008090430 |
| 0011 | 0.011755242 |
| 0100 | 0.015725795 |
| 0101 | 0.020057784 |
| 0110 | 0.024823663 |
| 0111 | 0.030120122 |
| 1000 | 0.036080271 |
| 1001 | 0.042894597 |
| 1010 | 0.050849554 |
| 1011 | 0.060405301 |
| 1100 | 0.072372655 |
| 1101 | 0.088395142 |
| 1110 | 0.112720172 |
| 1111 | 0.165035042 |

*Add after subclause 11.1:*

## 11.2 AdvancedFaceRecognition

### 11.2.1 Introduction

Advanced Face Recognition Descriptor is a descriptor of face identity robust to variations in pose and illumination conditions.

### 11.2.2 DDL representation syntax

```
<complexType name="AdvancedFaceRecognitionType" final="#all">
   <complexContent>
      <extension base="mpeg7:VisualDType">
         <sequence>
            <element name="FourierFeature">
               <simpleType>
                  <restriction>
                     <simpleType>
                        <list itemType="mpeg7:unsigned5"/>
                     </simpleType>
                     <minLength value="24"/>
```

© ISO/IEC 2004 All rights reserved

Copyright International Organization for Standardization
Provided by IHS under license with ISO
No reproduction or networking permitted without license from IHS
Not for Resale

```
                        <maxLength value="63"/>
                    </restriction>
                </simpleType>
            </element>
            <element name="CentralFourierFeature">
                <simpleType>
                    <restriction>
                        <simpleType>
                            <list itemType="mpeg7:unsigned5"/>
                        </simpleType>
                        <minLength value="24"/>
                        <maxLength value="63"/>
                    </restriction>
                </simpleType>
            </element>
            <sequence minOccurs="0">
                <element name="CompositeFeature">
                    <simpleType>
                        <restriction>
                            <simpleType>
                                <list itemType="mpeg7:unsigned5"/>
                            </simpleType>
                            <minLength value="0"/>
                            <maxLength value="63"/>
                        </restriction>
                    </simpleType>
                </element>
                <element name="SubregionCompositeFeature">
                    <simpleType>
                        <restriction>
                            <simpleType>
                                <list itemType="mpeg7:unsigned5"/>
                            </simpleType>
                            <minLength value="0"/>
                            <maxLength value="63"/>
                        </restriction>
                    </simpleType>
                </element>
            </sequence>
        </sequence>
    </complexContent>
  </extension>
</complexType>
```


Copyright International Organization for Standardization
Provided by IHS under license with ISO
No reproduction or networking permitted without license from IHS
Not for Resale
© ISO/IEC 2004 — All rights reserved

### 11.2.3 Binary representation syntax

| AdvancedFaceRecognition{ | Number of bits | Mnemonic |
|---|---|---|
| **numOfFourierFeature** | **6** | **uimsbf** |
| **numOfCentralFourierFeature** | **6** | **uimsbf** |
| **extensionFlag** | **1** | **bsblf** |
| for(k=0; k<numOfFourierFeature; k++){ | | |
| **FourierFeature[k]** | **5** | **uimsbf** |
| } | | |
| for(k=0; k<numOfCentralFourierFeature; k++){ | | |
| **CentralFourierFeature[k]** | **5** | **uimsbf** |
| } | | |
| if ( extensionFlag=="1" ){ | | |
| **numOfCompositeFeature** | **6** | **uimsbf** |
| **numOfSubregionCompositeFeature** | **6** | **uimsbf** |
| for (k=0; k< numOfCompositeFeature; k++){ | | |
| **CompositeFeature[k]** | **5** | **uimsbf** |
| } | | |
| for (k=0; k< numOfSubregionCompositeFeature; k++){ | | |
| **SubregionCompositeFeature[k]** | **5** | **uimsbf** |
| } | | |
| } | | |
| } | | |

### 11.2.4 Descriptor component semantics

**numOfFourierFeature**
This field specifies the number of components in FourierFeature. The allowed range is from 24 to 63.

**numOfCentralFourierFeature**
This field specifies the number of components in CentralFourierFeature. The allowed range is from 24 to 63.

**extensionFlag**
This field specifies existence of CompositeFeature and SubregionCompositeFeature. "1" indicates their presence, "0" does their absence. If extensionFlag is set to 1, either numOfCompositeFeature or numOfSubregionCompositeFeature shall be non-zero value.

**FourierFeature**
This element represents a facial feature based on the cascaded LDA of the Fourier characteristics of a normalized face image. The normalized face image is obtained by scaling an original image into 56 lines with 46 luminance values in each line. The center positions of two eyes in the normalized face image shall be located on the 24th row and the 16th and 31st columns for the right and left eyes respectively.

The FourierFeature element is derived from two feature vectors; one is a Fourier Spectrum Vector $\boldsymbol{x}_1^f$ , and the other is a Multi-block Fourier Amplitude Vector $\boldsymbol{x}_2^f$ . Figure Amd1-1 illustrates the extraction process of FourierFeature. Given a normalized face image, five steps should be performed to extract the element;

(1) Extraction of a Fourier Spectrum Vector $\boldsymbol{x}_1^f$ ,

© ISO/IEC 2004 All rights reserved
Copyright International Organization for Standardization
Provided by IHS under license with ISO
No reproduction or networking permitted without license from IHS
Not for Resale

(2) Extraction of a Multi-block Fourier Amplitude Vector $\boldsymbol{x}_2^f$ ,

(3) Projections of the feature vectors using PCLDA basis matrices $\boldsymbol{\Psi}_1^f$ , $\boldsymbol{\Psi}_2^f$ , and their normalization to unit vectors $\boldsymbol{y}_1^f$ , $\boldsymbol{y}_2^f$ ,

(4) Projection of a Joint Fourier Vector $\boldsymbol{y}_3^f$ of the unit vectors using an LDA basis matrix $\boldsymbol{\Psi}_3^f$ ,

(5) Quantization of the projected vector $\boldsymbol{z}^f$ .


© ISO/IEC 2004 — All rights reserved
Copyright International Organization for Standardization
Provided by IHS under license with ISO
No reproduction or networking permitted without license from IHS
Not for Resale

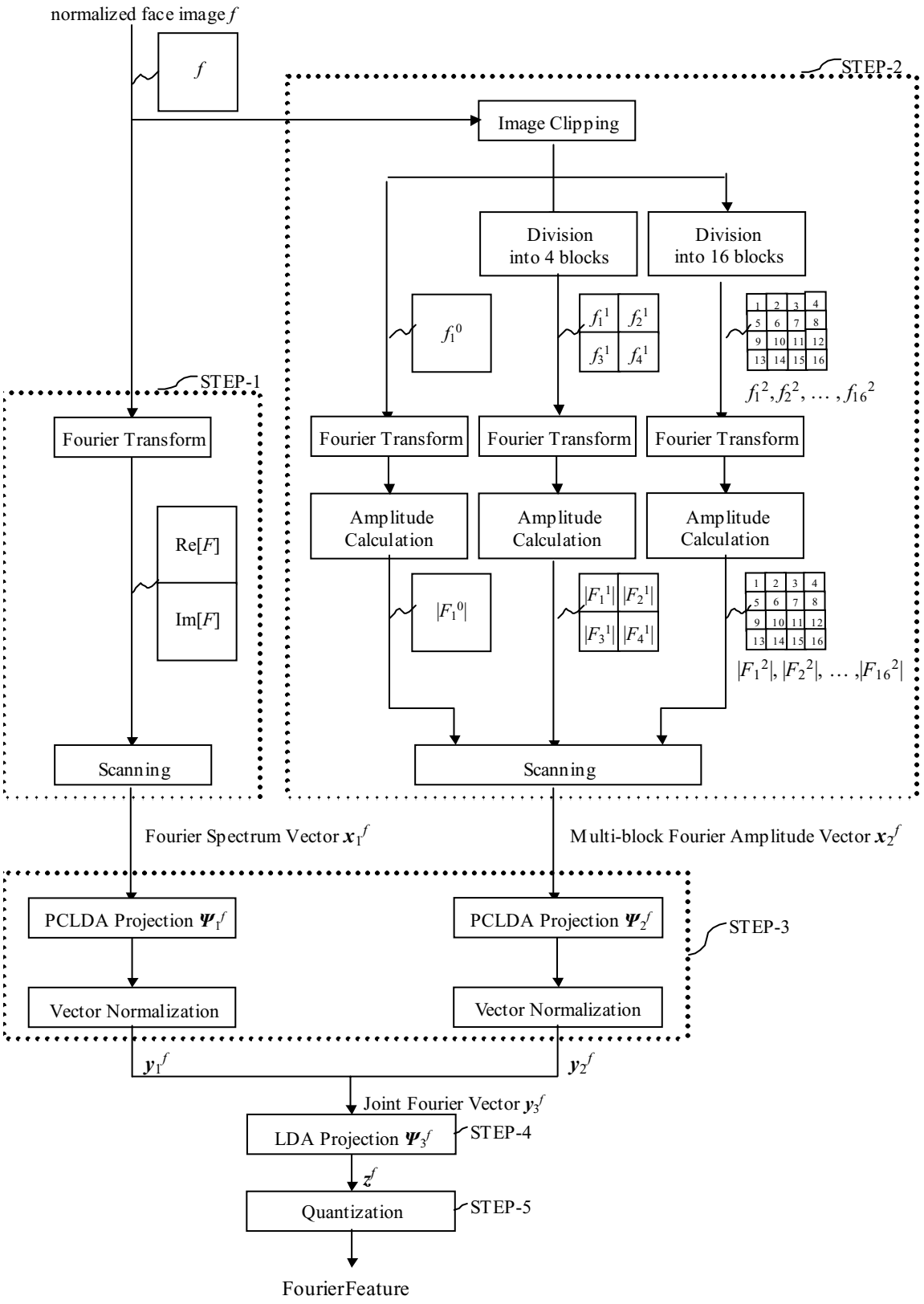


**Figure Amd1-1 - Extraction of FourierFeature.**

© ISO/IEC 2004 All rights reserved
Copyright International Organization for Standardization
Provided by IHS under license with ISO
No reproduction or networking permitted without license from IHS
Not for Resale

STEP 1) Extraction of Fourier Spectrum Vector

Given a normalized face image $f(x,y)$, the Fourier spectrum $F(u,v)$ of $f(x,y)$ is calculated by

$$F(u,v)=\sum_{x=0}^{M-1}\sum_{y=0}^{N-1}f(x,y)\exp\left(-2\pi i\left(\frac{xu}{M}+\frac{yv}{N}\right)\right)\quad(u=0,\cdots,M-1;v=0,\cdots,N-1).$$

Here, $M$ =46, $N$ =56. A Fourier Spectrum Vector $\boldsymbol{x}_1^f$ is defined as a set of scanned components of the Fourier spectrum. Figure Amd1-2 shows the scanning method of the Fourier spectrum. The scanning shall be performed only on two rectangle regions, region A and region B, in the Fourier domain. The scanning rule is concluded in Table Amd1-6. Here, $S_R$ (u, v) denotes the top-left coordinate of region R and $E_R$ (u,v) does the bottom-right point of region R, respectively. Therefore, the Fourier Spectrum Vector $\boldsymbol{x}_1^f$ is expressed by

$$\boldsymbol{x}_1^f=\begin{pmatrix}\Re e[F(0,0)]\\ \vdots\\ \Re e[F(11,0)]\\ \Re e[F(35,0)]\\ \vdots\\ \Re e[F(45,0)]\\ \vdots\\ \Re e[F(45,13)]\\ \Im m[F(0,0)]\\ \vdots\\ \Im m[F(11,0)]\\ \Im m[F(35,0)]\\ \vdots\\ \Im m[F(45,0)]\\ \vdots\\ \Im m[F(45,13)]\end{pmatrix}.$$

The dimension of $\boldsymbol{x}_1^f$ is $2*(M/2)*(N/4)$, i.e., 644.

STEP 2) Extraction of Multi-block Fourier Amplitude Vector

A Multi-block Fourier Amplitude Vector is extracted from the Fourier amplitudes of partial images in the normalized face image. As the partial images, three types of images are used; (a) a holistic image, (b) quarter images, and (c) 1/16 images.

(a) holistic image

A holistic image $f_1^0(x,y)$ is obtained by clipping the normalized face image $f(x,y)$ into 44x56 image size removing boundary columns in both sides. It is given by

$$f_1^0(x,y)=f(x+1,y)\qquad(x=0,1,\cdots,43;\ y=0,1,\cdots,55).$$

(b) quarter images

Quarter images are obtained by dividing the holistic image $f_1^0(x,y)$ equally into 4 blocks $f_k^1(x,y)$ ($k$ =1,2,3,4) given by

$$f_k^1(x,y)=f_1^0(x+22s_k^1,y+28t_k^1)\qquad(x=0,1,\cdots,21;y=0,1,\cdots,27),$$

where $s_k^1=(k-1)\%2$ and $t_k^1=(k-1)/2$.


© ISO/IEC 2004 — All rights reserved
Copyright International Organization for Standardization
Provided by IHS under license with ISO
No reproduction or networking permitted without license from IHS
Not for Resale

(c) one-sixteenth images

One-sixteenth images are obtained by dividing $f_1^0(x,y)$ equally into 16 blocks $f_k^2(x,y)$ ($k$=1,2,3, …, 16) given by

$$f_k^2(x,y) = f_1^0(x+11s_k^2, y+14t_k^2) \quad (x=0,1,\cdots,10; y=0,1,\cdots,13),$$

where $s_k^2 = (k-1)\%4$ and $t_k^2 = (k-1)/4$.

From these images, Fourier amplitudes $\left|F_k^j(u,v)\right|$ are calculated as follows:

$$F_k^j(u,v) = \sum_{x=0}^{M^j-1}\sum_{y=0}^{N^j-1} f_k^j(x,y)\exp\left(-2\pi i\left(\frac{xu}{M^j}+\frac{yv}{N^j}\right)\right),$$

$$\left|F_k^j(u,v)\right| = \sqrt{\Re e\left[F_k^j(u,v)\right]^2 + \Im m\left[F_k^j(u,v)\right]^2}.$$

$M^j$ denotes the width of each partial image, that is, $M^0$=44, $M^1$=22, and $M^2$=11. $N^j$ denotes the height of each partial image, that is, $N^0$=56, $N^1$=28, and $N^2$=14.

The Multi-block Fourier Amplitude Vector is obtained by scanning low frequency regions of each amplitude $\left|F_k^j(u,v)\right|$ in order as 1) the holistic image (k=1), 2) the quarter images (k=1,2,3,4), and 3) the one-sixteenth images (k=1,2,…,16). The scan regions are defined in Table Amd1-6.

Therefore, the Multi-block Fourier Amplitude Vector $\boldsymbol{x}_2^f$ is expressed as follow:

$$\boldsymbol{x}_2^f = \begin{pmatrix} \left|F_1^0(0,0)\right| \\ \vdots \\ \left|F_1^0(43,13)\right| \\ |F_1^1(0,0)| \\ \vdots \\ |F_1^1(21,6)| \\ |F_2^1(0,0)| \\ \vdots \\ |F_2^1(21,6)| \\ |F_3^1(0,0)| \\ \vdots \\ |F_4^1(21,6)| \\ |F_1^2(0,0)| \\ \vdots \\ |F_{16}^2(10,2)| \end{pmatrix}.$$

The dimension of $\boldsymbol{x}_2^f$ is $(M^0/2)*(N^0/4)+4*(M^1/2)*(N^1/4)+16*(M^2/2)*(N^2/4)$, i.e., 856.

© ISO/IEC 2004 All rights reserved

Copyright International Organization for Standardization
Provided by IHS under license with ISO
No reproduction or networking permitted without license from IHS
Not for Resale

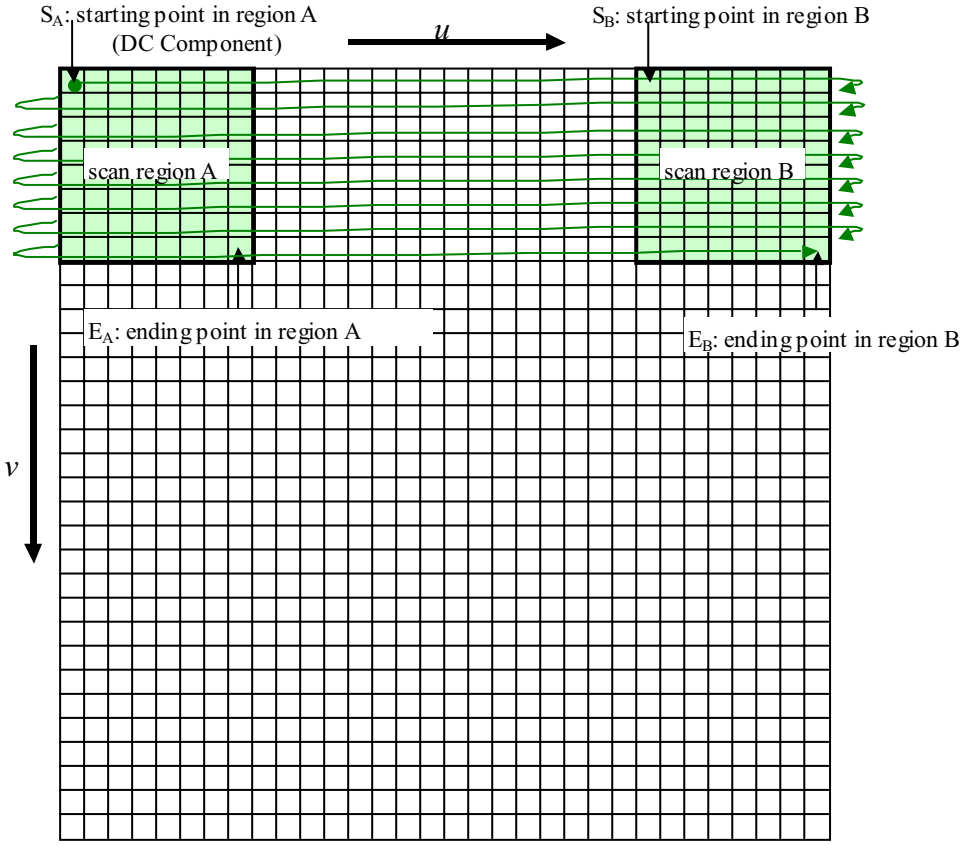


**Figure Amd1-2 - Definition of scanning in the Fourier domain.**

**Table Amd1-6 - Scan regions in Fourier domain for the FourierFeature element.**

| feature vector | elements of feature vector | scan region A | | scan region B | | vector dimension | | |
|---|---|---|---|---|---|---|---|---|
| | | $S_A$ | $E_A$ | $S_B$ | $E_B$ | subtotal | # of blocks | total |
| Fourier Spectrum vector $\boldsymbol{x}_1^f$ | $\Re e[F(u,v)]$ | (0,0) | (11,13) | (35,0) | (45,13) | 322 | - | 644 |
| | $\Im m[F(u,v)]$ | (0,0) | (11,13) | (35,0) | (45,13) | 322 | - | |
| Multi-block Fourier Amplitude vector $\boldsymbol{x}_2^f$ | $\lvert F_1^0(u,v)\rvert$ | (0,0) | (10,13) | (33,0) | (43,13) | 308 | 1 | 856 |
| | $\lvert F_k^1(u,v)\rvert$ | (0,0) | (5,6) | (17,0) | (21,6) | 77 | 4 | |
| | $\lvert F_k^2(u,v)\rvert$ | (0,0) | (2,2) | (9,0) | (10,2) | 15 | 16 | |

STEP 3) PCLDA projection and normalization

The Fourier Spectrum Vector $\boldsymbol{x}_1^f$ and the Multi-block Fourier Amplitude Vector $\boldsymbol{x}_2^f$ shall be respectively projected using PCLDA basis matrices $\boldsymbol{\Psi}_1^f$ and $\boldsymbol{\Psi}_2^f$, and normalized to unit vectors $\boldsymbol{y}_1^f$ and $\boldsymbol{y}_2^f$. The normalized vector $\boldsymbol{y}_k^f$ (k=1,2) is given by


© ISO/IEC 2004 — All rights reserved
Copyright International Organization for Standardization
Provided by IHS under license with ISO
No reproduction or networking permitted without license from IHS
Not for Resale

$$\boldsymbol{y}_k^f = \frac{\boldsymbol{\Psi}_k^{fT}\boldsymbol{x}_k^f - \boldsymbol{m}_k^f}{\left|\boldsymbol{\Psi}_k^{fT}\boldsymbol{x}_k^f - \boldsymbol{m}_k^f\right|},$$

where the PCLDA basis matrices $\boldsymbol{\Psi}_k^f$ and the mean vectors $\boldsymbol{m}_k^f$ are defined in Annex D. The dimensions of $\boldsymbol{y}_1^f$ and $\boldsymbol{y}_2^f$ are 70 and 80, respectively.

STEP 4) LDA projection of Joint Fourier vector

The normalized Vectors $\boldsymbol{y}_1^f$ and $\boldsymbol{y}_2^f$ are combined to form a 150-dimensional Joint Fourier Vector $\boldsymbol{y}_3^f$, and projected using the LDA basis matrix $\boldsymbol{\Psi}_3^f$ defined in Annex D. The projected vector $\boldsymbol{z}^f$ is given by

$$\begin{aligned}\boldsymbol{z}^f &= \boldsymbol{\Psi}_3^{fT}\boldsymbol{y}_3{}^f \\ &= \boldsymbol{\Psi}_3^{fT}\begin{pmatrix}\boldsymbol{y}_1{}^f \\ \boldsymbol{y}_2{}^f\end{pmatrix}.\end{aligned}$$

STEP 5) Quantization

Each element of $\boldsymbol{z}^f$ is clipped in the range of 5bit-unsigned integer using the following equation:

$$w_i^f = \begin{cases} 0, & if \quad z_i^f < -16 \\ 31, & if \quad z_i^f > 15 \\ \text{floor}(z_i^f + 16). & \text{otherwise} \end{cases}$$

The quantized elements are stored as FourierFeature. FourierFeature[0] represents the first quantized element $w_0^f$, and FourierFeature[numOfFourierFeature-1] corresponds to the *numOfFourierFeature*-th element $w_{\text{numOfFourierFeature}-1}^f$.

## CentralFourierFeature

This element represents a facial feature based on the cascaded LDA of the Fourier characteristics of the central part in the normalized face image. CentralFourierFeature is extracted in the similar way as FourierFeature.

The central part $g(x,y)$ is obtained by clipping the image $f(x,y)$ into 32x32 image size starting at (7,12) as follows:

$$g(x,y) = f(x+7, y+12) \quad (x = 0,1,\cdots,31; y = 0,1,\cdots,31).$$

STEP 1) Extraction of Central Fourier Spectrum Vector

The Fourier spectrum $G(u,v)$ of $g(x,y)$ is calculated by

$$G(u,v) = \sum_{x=0}^{M-1}\sum_{y=0}^{N-1} g(x,y)\exp\left(-2\pi i\left(\frac{xu}{M} + \frac{yv}{N}\right)\right) \quad (u = 0,\cdots,M-1; v = 0,\cdots,N-1),$$

where, $M$ =32, and $N$ =32. A 256-dimensional Central Fourier Spectrum Vector $\boldsymbol{x}_1^g$ is produced by scanning the Fourier spectrum $G(u,v)$ as defined in Table Amd1-7.

--`,,```,,,,````-`-`,,`,,`,`,,`---

© ISO/IEC 2004 All rights reserved

Copyright International Organization for Standardization
Provided by IHS under license with ISO
No reproduction or networking permitted without license from IHS
Not for Resale

**Table Amd1-7 - Scan regions in Fourier domain for the CentralFourierFeature element.**

| feature vector | elements of feature vector | scan region A | | scan region B | | vector dimension | | |
|---|---|---|---|---|---|---|---|---|
| | | $S_A$ | $E_A$ | $S_B$ | $E_B$ | subtotal | # of blocks | total |
| Central Fourier Spectrum Vector $\boldsymbol{x}_1^g$ | $\Re e[G(u,v)]$ | (0,0) | (7,7) | (24,0) | (31,7) | 128 | - | 256 |
| | $\Im m[G(u,v)]$ | (0,0) | (7,7) | (24,0) | (31,7) | 128 | - | |
| Central Multi-block Fourier Amplitude Vector $\boldsymbol{x}_2^g$ | $\lvert G_1^0(u,v)\rvert$ | (0,0) | (7,7) | (24,0) | (31,7) | 128 | 1 | 384 |
| | $\lvert G_k^1(u,v)\rvert$ | (0,0) | (3,3) | (12,0) | (15,3) | 32 | 4 | |
| | $\lvert G_k^2(u,v)\rvert$ | (0,0) | (1,1) | (6,0) | (7,1) | 8 | 16 | |

STEP 2) Extraction of Central Multi-block Fourier Amplitude Vector

A Central Multi-block Fourier Amplitude Vector $\boldsymbol{x}_2^g$ is extracted from the Fourier amplitudes of (a) the central part $g_1^0(x,y)$, (b) quarter images $g_k^1(x,y)$ ($k$ =1,2,3,4), and (c) 1/16 images $g_k^2(x,y)$ ($k$ =1,2,3,…,16).

(a) central part

$$g_1^0(x,y) = g(x,y) \quad (x = 0,1,\cdots,31; y = 0,1,\cdots,31).$$

(b) quarter images

$$g_k^1(x,y) = g(x+16s_k^1, y+16t_k^1) \quad (x = 0,1,\cdots,15; y = 0,1,\cdots,15),$$

where $s_k^1 = (k-1)\%2$ and $t_k^1 = (k-1)/2$.

(c) one-sexteenth images

$$g_k^2(x,y) = g_1^0(x+8s_k^2, y+8t_k^2) \quad (x = 0,1,\cdots,7; y = 0,1,\cdots,7),$$

where $s_k^2 = (k-1)\%4$ and $t_k^2 = (k-1)/4$.

The Fourier amplitude $\lvert G_k^j(u,v)\rvert$ of each image is calculated as follows:

$$G_k^j(u,v) = \sum_{x=0}^{M^j-1}\sum_{y=0}^{N^j-1} g_k^j(x,y)\exp\left(-2\pi i\left(\frac{xu}{M^j}+\frac{yv}{N^j}\right)\right),$$

$$\lvert G_k^j(u,v)\rvert = \sqrt{\Re e\left[G_k^j(u,v)\right]^2 + \Im m\left[G_k^j(u,v)\right]^2}.$$

where $M^0$ =32, $M^1$ =16, $M^2$ =8, $N^0$ =32, $N^1$ =16, and $N^2$ =8. A Multi-block Central Fourier Amplitude Vector $\boldsymbol{x}_2^g$ is obtained by scanning each amplitude $\lvert G_k^j(u,v)\rvert$ as defined in Table Amd1-7.

STEP 3-5) are the same as those of FourierFeature, for example, the Joint Central Fourier Vector $\mathbf{y}_3^g$ consists of the normalized vectors $\mathbf{y}_1^g$ and $\mathbf{y}_2^g$. The basis matrices $\boldsymbol{\Psi}_1^g$, $\boldsymbol{\Psi}_2^g$, $\boldsymbol{\Psi}_3^g$ and the mean vectors $\boldsymbol{m}_1^g$, $\boldsymbol{m}_2^g$ for CentralFourierFeature are defined in Annex D.

The size of CentralFourierFeature is indicated by numOfCentralFourierFeature.


© ISO/IEC 2004 — All rights reserved
Copyright International Organization for Standardization
Provided by IHS under license with ISO
No reproduction or networking permitted without license from IHS
Not for Resale

**numOfCompositeFeature**
This field specifies the number of components in CompositeFeature. The allowed range is from 0 to 63.

**numOfSubregionCompositeFeature**
This field specifies the number of components in CentralCompositeFeature. The allowed range is from 0 to 63.

### CompositeFeature

This element represents a facial feature based on the cascaded LDA of Joint Fourier Vector $\mathbf{y}_3^f$ and Luminance Vector $\mathbf{y}^k$ of a normalized face image. Figure Amd1-3 illustrates its extraction process.

© ISO/IEC 2004 All rights reserved
Copyright International Organization for Standardization
Provided by IHS under license with ISO
No reproduction or networking permitted without license from IHS
Not for Resale

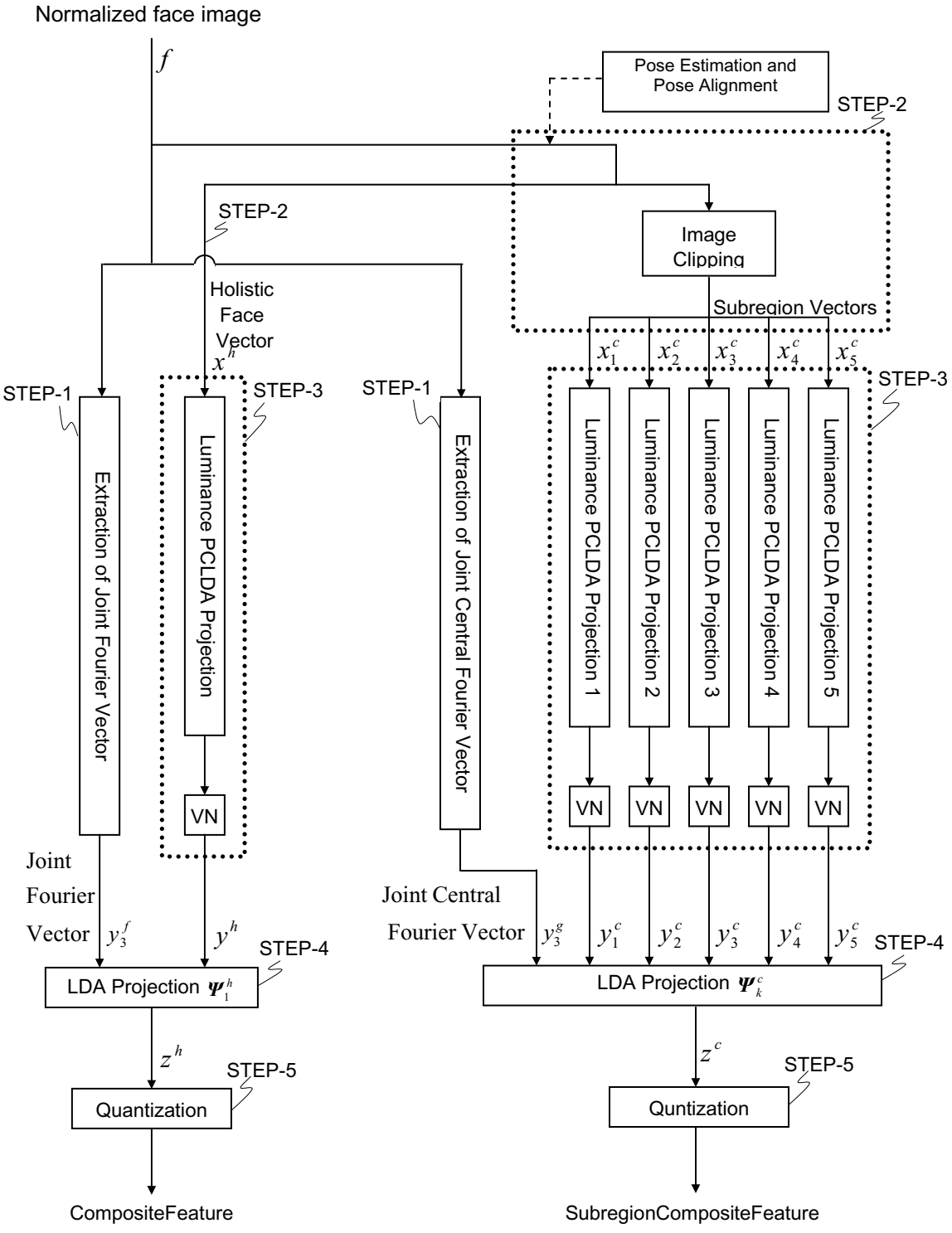


**Figure Amd1-3 - Extraction of CompositeFeature and CentralCompositeFeature.**


© ISO/IEC 2004 — All rights reserved
Copyright International Organization for Standardization
Provided by IHS under license with ISO
No reproduction or networking permitted without license from IHS
Not for Resale

STEP 1) Extraction of Joint Fourier Vector

A 150-dimensional Joint Fourier Vector $\boldsymbol{y}_3^f$ is extracted from the normalized face image as defined in the Component semantics of FourierFeature

STEP 2) Extraction of Holistic Face Vector

A 2576-dimensional Holistic Face Vector $\boldsymbol{x}^h$ is extracted from the normalized face image using a row-wise raster-scan starting at the top-left corner and finishing at the bottom-right corner. Pose compensation process can be applied before or after the normalization process as optional. In case of pose compensated image, the eye positions are also restricted as defined in the normalized face image.

STEP 3) PCLDA projection and normalization of Holistic Face Vector

The Holistic Face Vector $\boldsymbol{x}^h$ is projected using a PCLDA basis matrix, and normalized to a 40-dimensional Luminance Vector $\boldsymbol{y}^h$ given by

$$\boldsymbol{y}^h = \frac{\boldsymbol{\Psi}_1^{hT}\boldsymbol{x}^h - \boldsymbol{m}^h}{\left|\boldsymbol{\Psi}_1^{hT}\boldsymbol{x}^h - \boldsymbol{m}^h\right|},$$

where the PCLDA basis matrix $\boldsymbol{\Psi}_1^h$ and the mean vector $\boldsymbol{m}^h$ are specified in Annex D.

STEP 4) LDA projection

The Joint Fourier Vector $\boldsymbol{y}_3^f$ and the Luminance Vector $\boldsymbol{y}^h$ are combined to form a 190-dimensional vector. The combined vector shall be projected using the LDA basis matrix $\boldsymbol{\Psi}_2^h$ specified in Annex D. The projected vector $\boldsymbol{z}^h$ is given by

$$\boldsymbol{z}^h = \boldsymbol{\Psi}_2^{hT}\begin{pmatrix}\boldsymbol{y}_3^f \\ \boldsymbol{y}^h\end{pmatrix}.$$

STEP 5) Quantization

Each element of $\boldsymbol{z}^h$ is clipped in the range of 5-bit unsigned integer, and stored as CompositeFeature. The size of CompositeFeature is indicated by numOfCompositeFeature.

## SubregionCompositeFeature

This element represents a facial feature based on the cascaded LDA of Joint Central Fourier Vector $\mathbf{y}_3^g$ and Subregion Vectors $\mathbf{y}_k^c(k=1,2,\ldots 5)$ of a normalized face image as shown in Figure 6. The Subregions are designed to decompose the normalized face image into five parts as shown in Figure Amd1-4.

© ISO/IEC 2004 All rights reserved

Copyright International Organization for Standardization
Provided by IHS under license with ISO
No reproduction or networking permitted without license from IHS
Not for Resale

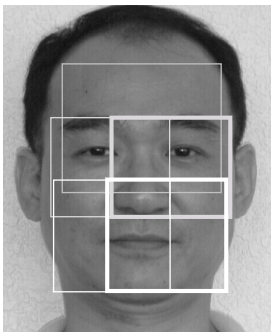

**Figure Amd1-4 - The five subregions of a normalized face image**

The extraction process is described below.

STEP 1) Extraction of Joint Central Fouirer Vector

A 150-dimensional Joint Central Fourier Vector $\boldsymbol{y}_3^g$ is extracted as defined in the Component semantics of CentralFourierFeature.

STEP 2) Extraction of Face Subregion Vectors

Five Face Subregion Vectors $x_k^c(k=1,2,\cdots 5)$ are extracted from the normalized face image using the row-wise raster-scan defined in Table Amd1-8. A pose-compensated image can be used instead of the normalized face image as in CompositeFeature.

STEP 3) PCLDA projection of Face Subregion Vectors

Each vector $\boldsymbol{x}_k^c$ is projected using a PCLDA basis matrix, and normalized to a 40-dimensional Subregion Vector $\boldsymbol{y}_k^c$ given by

$$\boldsymbol{y}_k^c = \frac{\boldsymbol{\Psi}_k^{cT}\boldsymbol{x}_k^c - \boldsymbol{m}_k^c}{\left|\boldsymbol{\Psi}_k^{cT}\boldsymbol{x}_k^c - \boldsymbol{m}_k^c\right|},$$

where the PCLDA basis matrices $\boldsymbol{\Psi}_k^c$ ($k$=1,2,...,5) and the mean vectors $\boldsymbol{m}_k^c$ ($k$=1,2,...,5) are specified in Annex D.

STEP 4) LDA projection

The Joint Central Fourier Vector $\boldsymbol{y}_3^g$ and the Subregion Vectors $\boldsymbol{y}_k^c$ ($k$=1,2,...,5) are combined to form a 350-dimensional vector. The combined vector shall be projected using the LDA basis matrix $\boldsymbol{\Psi}_6^c$ specified in Annex D. The projected vector $\boldsymbol{z}^c$ is given by

$$\boldsymbol{z}^c = \boldsymbol{\Psi}_6^{cT}\begin{pmatrix}\boldsymbol{y}_3^g\\ \boldsymbol{y}_1^c\\ \boldsymbol{y}_2^c\\ \boldsymbol{y}_3^c\\ \boldsymbol{y}_4^c\\ \boldsymbol{y}_5^c\end{pmatrix}.$$

STEP 5) Quantization


© ISO/IEC 2004 — All rights reserved
Copyright International Organization for Standardization
Provided by IHS under license with ISO
No reproduction or networking permitted without license from IHS
Not for Resale

Each element of $z^c$ is clipped in the range of 5-bits unsigned integer, and stored as SubregionCompositeFeature. The size of SubregionCompositeFeature is indicated by numOfSubregionCompositeFeature.

**Table Amd1-8 - Scan regions for CompositeFeature and SubregionCompositeFeature.**

| Feature vector | Top-left | | size | | Vector Dimension |
|---|---|---|---|---|---|
| | $x$ | $y$ | Width | Height | |
| Holistic Face Vector $\boldsymbol{x}^h$ | 0 | 0 | 46 | 56 | 2576 |
| Subregion Vector $\boldsymbol{x}_1^c$ | 9 | 4 | 29 | 27 | 783 |
| Subregion Vector $\boldsymbol{x}_2^c$ | 6 | 16 | 24 | 21 | 504 |
| Subregion Vector $\boldsymbol{x}_3^c$ | 17 | 16 | 24 | 21 | 504 |
| Subregion Vector $\boldsymbol{x}_4^c$ | 7 | 25 | 24 | 24 | 576 |
| Subregion Vector $\boldsymbol{x}_5^c$ | 16 | 25 | 24 | 24 | 576 |

*Add a new subclause 12:*

# 12 Visual Description Schemes

## 12.1 Media-centric description schemes

### 12.1.1 Introduction

This subclause specifies three visual description schemes designed to describe different types of visual contents. The StillRegionFeatureType contains several elementary descriptors to describe the signal-level characteristics of arbitrary shaped still regions. The VideoSegmentFeatureType and MovingRegionFeatureType are designed to describe those of moving pictures. The former supports ordinary video without shape and the latter does arbitrary shaped video sequences. Note that these visual description schemes include features associated with vsisual-signal characteristics (eg., color, texture, shape and motion) and that other features such as spatial or temporal localization shall be specified in the corresponding Segment DSs (defined in ISO/IEC 15938-5).

### 12.1.2 Media-centric DS Syntax

```
<!-- ######################################### -->
<!--  Definition of media-centric visual DSs  -->
<!-- ######################################### -->

<!-- ################################################## -->
<!--  Definition of MPEG-7 Still Region Feature Type   -->
<!-- ################################################## -->

<complexType name="StillRegionFeatureType">
  <complexContent>
    <extension base="mpeg7:VisualDSType">
      <sequence>
      <!-- List of features available -->
      <!-- Color Distribution -->
      <choice minOccurs="0">
        <!-- for the region with limited number of colors -->
```

© ISO/IEC 2004 All rights reserved

Copyright International Organization for Standardization
Provided by IHS under license with ISO
No reproduction or networking permitted without license from IHS
Not for Resale

```
        <element name="DominantColor" type="mpeg7:DominantColorType">
        <!-- for generic applications -->
        <element name="ScalableColor" type="mpeg7:ScalableColorType">
        <!-- for high-level applications requesting precise retrieval -->
        <element name="ColorStructure" type="mpeg7:ColorStructureType">
      </choice>
      <!-- Spatial Distribution of Color -->
      <element name="ColorLayout" type="mpeg7:ColorLayoutType" minOccurs="0">
      <!-- Color Temperature -->
      <element name="ColorTemperature" type="mpeg7:ColorTemperatureType"
               minOccurs="0">
      <!—Illumination Independent Color -->
      <element name="IlluminationCompensatedColor"
                type="mpeg7:IlluminationInvariantColorType" minOccurs="0">
      <!-- Spatial Distribution of edges -->
      <element name="Edge" type="mpeg7:EdgeHistogramType" minOccurs="0">
      <!-- Homogeneous Patterns -->
      <!-- It is applicable only to the picture with homogeneous pattern -->
      <choice minOccurs="0">
        <element name="HomogeneousPattern" type="mpeg7:HomogenousTextureType">
        <!-- In case only rough browsing is requested -->
        <element name="TextureBrowsing" type="mpeg7:TextureBrowsingType">
      </choice>
      <!-- Shape -->
      <choice minOccurs="0">
        <!-- for shape mask-->
        <element name="ShapeMask" type="mpeg7:RegionShapeType">
        <!-- for contour -->
        <element name="Contour" type="mpeg7:ContourShapeType">
      </choice>
      </sequence>
    </extension>
  </complexContent>
</complexType>

<!-- ################################################## -->
<!--  Definition of MPEG-7 VideoSegmentFeatureType   -->
<!-- ################################################## -->

<complexType name="VideoSegmentFeatureType">
  <complexContent>
    <extension base="mpeg7:VisualDSType">
      <sequence>
      <!-- List of features available -->
      <!-- Temporal transition of frame feature -->
      <element name="TemporalTransition" type="mpeg7:VisualTimeSeriesType"
                minOccurs="0" maxOccurs="unbounded"/>
      <!-- Representative feature over all frame in the sequence -->
      <element name="RepresentativeFeature" type="mpeg7:GofGopFeature"
        minOccurs="0" maxOccurs="unbounded"/>
      <!-- motion activity -->
      <element name="MotionActivity" type="mpeg7:MotionActivityType"
                minOccurs="0"/>
      </sequence>
    </extension>
  </complexContent>
</complexType>

<!-- ################################################## -->
<!--  Definition of MPEG-7 MovingRegionFeatureType   -->
```


Copyright International Organization for Standardization
Provided by IHS under license with ISO
No reproduction or networking permitted without license from IHS
Not for Resale
© ISO/IEC 2004 — All rights reserved

```
<!-- ################################################## -->

<complexType name="MovingRegionFeatureType">
  <complexContent>
    <extension base="mpeg7:VideoSegmentFeatureType">
      <sequence>
      <!-- List of features available -->
      <!-- description of statistical characteristics of shape changes -->
      <element name="ShapeVariation" type="mpeg7:ShapeVariationType"
                minOccurs="0"/>
      <!-- description of motion characteristics -->
      <choice minOccurs="0">
        <element name="ParametricMotion" type="mpeg7:ParametricMotionType">
        <element name="MotionTrajectory" type="mpeg7:MotionTrajectoryType">
      </choice>
      </sequence>
    </extension>
  </complexContent>
</complexType>
```

### 12.1.3 Semantics

Semantics of the `StillRegionFeatureType`:

| *Name* | *Definition* |
|---|---|
| `StillRegionFeatureType` | Describes visual characteristics of an arbitrary-shaped still region. StillPicture`Type` extends Visual`DSType`. |
| `DominantColor` | Describes the color distribution of a still region. This element is useful for the pictures which have limited number of colors like an animation or a piece of natural pictures. |
| `ScalableColor` | Describes the color distribution of a still region. This element is useful for the applications which request the interoperability between the conventional systems which are not mpeg-7 conformant, but uses a histogram-based color-distribution description tool. |
| `ColorStructure` | Describes the color distribution of a still region. This tool is useful for the applications which expect high accuracy rather than low description storage cost as well as low complexity. |
| `ColorLayout` | Describes the spatial distribution of colors of a still region. |
| `ColorTemperature` | Describes the perceptual temperature feeling of illumination color in a still region. |
| `IlluminationCompensatedColor` | Describe the color distribution or spatial-distribution of color of a still region in where illumination condition is compensated for illumination independent color retrieval. |
| `Edge` | Describes the spatial distribution of edges of a still region. |
| `HomogeneousPattern` | Describes the homogeneous pattern of a still region. |

© ISO/IEC 2004 All rights reserved
Copyright International Organization for Standardization
Provided by IHS under license with ISO
No reproduction or networking permitted without license from IHS
Not for Resale

| *Name* | *Definition* |
|---|---|
| TextureBrowsing | Describes the homogeneous pattern of a still region using predefined terms. |
| ShapeMask | Describe the shape mask of an arbitrary shaped region. This element is useful in case the region is disconnected or has holes inside. |
| Contour | Describes the contour characteristic of an arbitrary shaped region. This element is useful to describe a contour instead of a mask pattern. |

Semantics of the VideoSegmentFeatureType:

| *Name* | *Definition* |
|---|---|
| VideoSegmentFeatureType | Describes visual characteristics of ordinary moving pictures. VideoSequenceType extends VisualDSType. |
| TemporalTransition | Describe temporal transition of an elementary feature. |
| RepresentativeFeature | Describe a representative value of an elementary feature. |
| MotionActivity | Describe motion variation over a segment. |

Semantics of the MovingRegionFeatureType:

| *Name* | *Definition* |
|---|---|
| MovingRegionFeatureType | Describes visual characteristics of arbitrary shaped video sequeces. VideoObjectType extends VisualDSType. |
| ShapeVariation | Describes shape variation over a video segment. |
| ParametricMotion | Describe model parameters representing the motion over the attached moving region. |
| MotionTrajectory | Describe the trajectory of the attached region. |

--`,,```,,,,````-`-`,,`,,`,`,,`---



© ISO/IEC 2004 — All rights reserved
Copyright International Organization for Standardization
Provided by IHS under license with ISO
No reproduction or networking permitted without license from IHS
Not for Resale

*Add new Annex after Annex C:*

## Annex D
## (normative)

## Model parameters for Advanced Face Recognition

Tables D-1, D-2, D-3 and D-4 summarize the model parameters used by the Advanced Face Recognition descriptor described in Section 11.2. All the parameter values are defined bellow the Tables; using C language like syntax. For example, if a model parameter $\Psi$ is described in this annex as follows:

$\Psi$ [2][3]={{1,2,3},{4,5,6}};

it means that:

$$\Psi = \begin{pmatrix} 1 & 4 \\ 2 & 5 \\ 3 & 6 \end{pmatrix}$$

**Table D-1 - Model parameters for FourierFeature element used in Advanced Face Recognition**

| model parameter | meaning of model parameter |
|---|---|
| PCLDA basis matrix $\Psi_1^f$ | 70x644 basis matrix obtained by PCLDA of Fourier Spectrum Vector $x_1^f$ |
| mean vector $m_1^f$ | 70-dimensional mean vector of projected vector $\Psi_1^{fT} x_1^f$ |
| PCLDA basis matrix $\Psi_2^f$ | 80x856 basis matrix obtained by PCLDA of Multi-block Fourier Amplitude Vector $x_2^f$ |
| mean vector $m_2^f$ | 80-dimensional mean vector of projected vector $\Psi_2^{fT} x_2^f$ |
| LDA basis matrix $\Psi_3^f$ | 63x150 basis matrix obtained by LDA of Joint Fourier Vector $y_3^f$ |

**Table D-2 - Model parameters for CentralFourierFeature used in Advanced Face Recognition**

| model parameter | meaning of model parameter |
|---|---|
| PCLDA basis matrix $\Psi_1^g$ | 70x256 basis matrix obtained by PCLDA of Central Fourier Spectrum Vector $x_1^g$ |
| mean vector $m_1^g$ | 70-dimensional mean vector of projected vector $\Psi_1^{gT} x_1^g$ |
| PCLDA basis matrix $\Psi_2^g$ | 80x384 basis matrix obtained by PCLDA of Central Multi-block Fourier Amplitude Vector $x_2^g$ |
| mean vector $m_2^g$ | 80-dimensional mean vector of projected vector $\Psi_2^{gT} x_2^g$ |
| LDA basis matrix $\Psi_3^g$ | 63x150 basis matrix obtained by LDA of Joint Central Fourier Vector $y_3^g$ |

**Table D-3 - Model parameters for CompositeFeature used in Advanced Face Recognition**

| model parameter | meaning of model parameter |
|---|---|
| PCLDA basis matrix $\Psi_1^h$ | 40x2576 basis matrix obtained by PCLDA of Holistic Face Vector $x^h$ |
| mean vector $m^h$ | 40-dimensional mean vector of projected vector $\Psi_1^{hT} x^h$ |
| LDA basis matrix $\Psi_2^h$ | 63x190 basis matrix obtained by LDA of combined vector of $y_3^f$ and $y^h$ |

**Table D-4 - Model parameters for SubregionCompositeFeature used in Advanced Face Recognition**

| model parameter | meaning of model parameter |
|---|---|
| PCLDA basis matrix $\Psi_1^c$ | 40x783 basis matrix obtained by PCLDA of Face Subregion Vector $x_1^c$ |
| PCLDA basis matrix $\Psi_2^c$ | 40x504 basis matrix obtained by PCLDA of Face Subregion Vector $x_2^c$ |
| PCLDA basis matrix $\Psi_3^c$ | 40x504 basis matrix obtained by PCLDA of Face Subregion Vector $x_3^c$ |
| PCLDA basis matrix $\Psi_4^c$ | 40x576 basis matrix obtained by PCLDA of Face Subregion Vector $x_4^c$ |
| PCLDA basis matrix $\Psi_5^c$ | 40x576 basis matrix obtained by PCLDA of Face Subregion Vector $x_5^c$ |
| mean vector $m_1^c$ | 40-dimensional mean vector of projected vector $\Psi_1^{cT} x_1^c$ |
| mean vector $m_2^c$ | 40-dimensional mean vector of projected vector $\Psi_2^{cT} x_2^c$ |
| mean vector $m_3^c$ | 40-dimensional mean vector of projected vector $\Psi_3^{cT} x_3^c$ |
| mean vector $m_4^c$ | 40-dimensional mean vector of projected vector $\Psi_4^{cT} x_4^c$ |
| mean vector $m_5^c$ | 40-dimensional mean vector of projected vector $\Psi_5^{cT} x_5^c$ |
| LDA basis matrix $\Psi_6^c$ | 63x350 basis matrix obtained by LDA of combined vector of $y_3^g, y_1^c, y_2^c, y_3^c, y_4^c, y_5^c$ |

© ISO/IEC 2004 — All rights reserved


Copyright International Organization for Standardization
Provided by IHS under license with ISO
No reproduction or networking permitted without license from IHS
Not for Resale

PCLDA basis matrix $\Psi_1^f$ [70][644]={

{2.928142e-002, 1.719657e-001, -4.431209e-002, 1.431678e-002, 9.404494e-002, -2.425928e-002, 4.765720e-002, 1.479648e-002, 2.928023e-004, 5.470493e-002, -3.046105e-002, 3.502573e-002, 3.502573e-002, -3.046105e-002, 5.470493e-002, 2.928023e-004, 1.479648e-002, 4.765720e-002, -2.425928e-002, 9.404494e-002, 1.431678e-002, -4.431209e-002, 1.719657e-001, 4.842488e-002, -1.008709e-001, 2.226921e-001, -6.170412e-002, 8.626641e-002, -2.506170e-002, 2.019665e-002, -2.703654e-003, 3.422383e-002, -5.832668e-002, 3.697568e-002, 4.341332e-004, 2.983990e-002, 5.227782e-002, -1.534924e-002, 4.036130e-002, 3.783265e-002, 3.399130e-002, -3.111502e-002, 3.267962e-002, 4.210681e-002, 1.196126e-001, -5.267082e-002, 2.398889e-002, 8.602008e-002, -6.629223e-002, 2.209730e-002, 2.229748e-002, 2.584037e-002, 6.588156e-004, 1.132942e-002, 2.245798e-002, 6.417187e-002, -3.879746e-002, -5.227759e-003, 2.769614e-003, 8.290947e-003, 4.675062e-002, 1.412390e-002, -1.534332e-002, -7.683035e-003, 1.020499e-001, -3.925166e-002, 4.785850e-002, -1.094535e-001, 8.274209e-002, 4.504214e-002, -1.817646e-002, 1.166661e-001, 6.097985e-002, -4.827652e-002, 8.919261e-002, 4.427936e-002, -1.105109e-002, 5.285195e-002, 2.421766e-003, 4.707541e-002, 2.924441e-002, 1.895663e-002, 1.356471e-004, -1.790212e-003, 7.941514e-003, -7.192989e-003, 6.274009e-003, 2.283336e-003, 6.729050e-003, -5.127053e-002, 1.051507e-001, 4.503916e-002, -5.841115e-002, 2.603932e-002, -4.670765e-002, 3.396085e-002, 3.983563e-002, 4.443092e-002, -2.484549e-002, 4.711532e-002, 1.508593e-002, 4.201075e-002, -2.066626e-003, -3.866731e-002, -5.988993e-003, 4.027007e-002, -1.523774e-003, 1.595520e-002, 7.042017e-002, -2.634239e-002, 2.532085e-002, 5.677276e-002, 6.509260e-002, -1.082861e-002, 3.327327e-002, 4.220668e-002, -1.561912e-002, 8.038052e-002, 2.340617e-002, 3.666640e-002, 7.200849e-003, 6.870737e-002, -1.777832e-003, 1.553079e-002, -8.208426e-003, -2.321398e-002, 2.445433e-003, -2.726799e-002, -2.791122e-002, 2.417603e-002, -8.741110e-003, -1.845534e-002, 1.189513e-001, -4.590476e-003, -2.052539e-003, 3.205180e-002, 1.459760e-001, 3.547427e-002, 2.680840e-002, 3.992865e-002, 6.269639e-002, 3.696668e-002, -3.244331e-002, 8.547534e-002, -4.207478e-002, 1.351396e-002, -3.398529e-003, -8.046674e-003, 5.811366e-003, -1.666645e-002, -2.323962e-002, -7.236192e-003, -8.148130e-003, 1.538433e-002, 1.010369e-002, -5.468572e-002, 3.142811e-002, 2.330009e-002, -2.080412e-002, 1.387783e-001, 1.948067e-002, 8.921116e-002, 3.262514e-002, -8.258636e-002, 6.005106e-002, -3.548484e-003, 3.616212e-003, 5.876242e-002, -1.808209e-002, 2.138555e-002, 2.983253e-002, -1.319066e-002, -1.501944e-002, -1.019477e-002, -4.018774e-002, 2.029407e-003, 2.284629e-002, -9.027509e-003, 4.400758e-002, -3.056263e-002, -3.432101e-002, 9.717422e-002, -5.985118e-002, 1.476761e-002, -6.119363e-002, 5.131605e-002, 2.446677e-002, -2.650960e-002, 2.546457e-002, 8.759276e-003, -4.797285e-002, 4.538432e-002, 9.605836e-003, -1.668006e-002, -1.772051e-002, -2.736696e-002, 6.851678e-003, -2.046165e-003, -3.857791e-002, -2.928202e-002, 4.805542e-002, -3.133418e-003, -2.538183e-002, 2.172448e-002, 1.546931e-002, 4.598113e-002, 2.283818e-002, 8.661684e-003, 3.383235e-002, 5.905397e-002, 8.643810e-003, -3.547162e-002, -3.258100e-003, 1.532459e-002, -1.864142e-002, 1.722424e-002, -1.171515e-002, -2.970899e-002, -1.616431e-002, 1.123617e-002, 6.772148e-003, -2.117760e-002, -1.045900e-002, -1.498204e-002, 8.908662e-003, 1.268856e-002, -2.904782e-002, -2.978640e-002, 4.916459e-002, 4.690168e-002, 5.619050e-002, 8.020360e-003, 3.720805e-002, -3.016525e-003, 1.190253e-002, 3.819415e-003, -2.319658e-002, -6.856196e-003, 1.289163e-002, -2.501261e-002, -2.776890e-002, -4.972681e-003, 5.119079e-003, -7.981111e-003, 5.809963e-003, -1.018658e-002, 5.371414e-003, -2.592355e-003, -1.994785e-002, -7.397682e-003, 2.177879e-002, 2.924424e-003, 4.221390e-002, -6.441957e-003, 1.726997e-002, 1.456628e-002, 4.901712e-003, 3.528113e-002, 1.926344e-002, -1.808985e-002, 1.021286e-002, -1.109246e-002, -2.335846e-002, -4.067626e-003, 4.029135e-003, 1.284967e-003, 1.838665e-002, -6.860565e-003, 2.114314e-003, 8.503163e-003, -2.350975e-002, -7.794201e-003, 1.536111e-002, 1.420203e-002, 2.314845e-002, 6.244320e-003, 1.096820e-002, -1.439276e-003, 2.584791e-002, -5.489382e-003, 1.495002e-002, 1.592999e-002, 8.121851e-003, -9.563546e-003, -5.739768e-003, -1.278827e-002, -5.588983e-003, 1.308182e-003, 5.196910e-003, -4.139638e-004, 1.748569e-002, 2.708094e-004, -1.619654e-002, 1.451333e-002, -3.727321e-003, 1.941171e-004, -1.988147e-003, 3.000748e-002, 1.668786e-002, -9.269694e-003, 1.897441e-002, 1.736901e-002, -2.332687e-002, 2.721933e-002, 1.857813e-002, -1.777435e-002, 1.643169e-002, -1.598888e-003, -1.738384e-002, 1.190701e-003, 5.286855e-003, 3.487196e-004, 6.666230e-003, 4.687781e-003, 6.076918e-004, 2.243805e-002, -1.839224e-002, 9.342994e-003, 8.630246e-003, -3.952570e-003, 1.644494e-002, 1.690965e-002, 1.267699e-017, -6.815579e-003, 2.644735e-002, -2.551720e-002, 3.852634e-002, 5.649824e-003, -3.216271e-003, -1.603590e-002, 4.285660e-002, 8.981522e-003, 1.551337e-002, 3.655094e-002, -3.655094e-002, -1.551337e-002, -8.981522e-003, -4.285660e-002, 1.603590e-002, 3.216271e-003, -5.649824e-003, -3.852634e-002, 2.551720e-002, -2.644735e-002, 6.815579e-003, -9.225577e-002, 1.036860e-001, -1.630799e-002, 6.683128e-002, 2.373192e-002, 8.029718e-002, 7.197275e-003, 2.918706e-002, 7.218083e-003, -2.660391e-002, 5.917282e-003, -3.408560e-002, -5.899893e-002, -4.715534e-002, -2.850076e-002, 4.701692e-002, 4.193763e-002, -2.011415e-002, 2.894306e-002, 3.777705e-003, 3.282757e-002, -4.831474e-002, 1.210848e-001, -


© ISO/IEC 2004 — All rights reserved

Copyright International Organization for Standardization
Provided by IHS under license with ISO
No reproduction or networking permitted without license from IHS
Not for Resale

1.377055e-001, -5.792044e-002, 5.325722e-002, -4.948085e-002, -7.446835e-002, 4.785602e-002, -1.825273e-002, -3.383690e-003, -6.336581e-004, 5.915947e-002, -2.278132e-002, 2.651507e-002, 1.450842e-002, -4.156814e-002, 4.173056e-002, 5.903495e-003, -3.045556e-002, -9.873950e-003, -1.112008e-002, -3.745951e-002, -9.065576e-002, 1.044670e-001, -2.634437e-002, 1.178992e-001, -5.560025e-002, -1.099136e-001, 7.960356e-002, -3.913083e-002, 4.061430e-002, -9.016647e-002, 9.486736e-003, 3.242317e-002, -7.412747e-002, 9.122073e-003, -8.676661e-003, 2.164974e-002, 2.342047e-002, -8.956029e-002, 1.559508e-002, 5.469436e-003, -1.256066e-001, -2.371166e-002, -1.360972e-002, -4.988991e-003, -2.063319e-002, -9.891970e-002, -8.577971e-002, 9.749025e-002, -2.539530e-002, 1.123935e-002, 4.578883e-002, -3.736719e-002, 9.828974e-002, 7.304753e-003, -3.283976e-002, 7.151275e-002, -2.242837e-002, 8.444321e-005, 2.232252e-002, -5.363266e-003, 6.871066e-003, -6.758540e-002, -1.814016e-002, 5.975538e-002, -4.870198e-002, 4.117262e-002, 4.026363e-002, -3.116752e-002, 8.019010e-002, 1.869799e-002, -3.463284e-002, 4.875188e-002, -3.776397e-002, -4.965823e-002, 4.641636e-002, -7.452860e-002, -1.535235e-003, 1.122951e-002, -5.423695e-002, -1.134586e-002, -5.709689e-002, -4.348204e-002, 9.614492e-003, -2.340142e-002, -1.089901e-002, 3.290045e-003, -6.264088e-002, 3.429398e-002, -4.663417e-002, -2.412714e-002, 3.522797e-002, -9.733648e-002, 2.427057e-002, 3.124237e-002, -2.350285e-002, -5.753743e-002, 5.843489e-002, -3.188425e-002, 1.751512e-002, -3.313050e-002, -1.730371e-002, -1.280812e-002, -6.491695e-002, -1.631806e-002, -6.176201e-004, -3.753628e-002, -1.193893e-002, -4.991019e-002, -4.135850e-002, 8.685620e-003, -3.023587e-002, 6.300155e-002, -3.817855e-003, -7.969032e-002, -3.630739e-002, 2.438657e-002, 1.697686e-002, 5.624706e-004, 3.864146e-003, -6.112880e-003, -1.932450e-003, -2.073453e-002, -1.448116e-003, -1.462729e-002, -5.909637e-002, -2.365651e-002, -1.238565e-003, 1.200054e-002, 1.877144e-003, 2.200273e-003, -5.463106e-003, -5.426353e-002, -5.709379e-003, -3.089491e-002, -5.402753e-002, 5.217873e-002, 1.361624e-002, -1.311584e-005, -5.162799e-002, -4.468758e-002, 1.408601e-002, -4.005611e-002, -1.272323e-002, 1.899633e-002, -3.402836e-003, 3.500757e-003, -2.417994e-002, -1.053848e-002, 5.781910e-003, 1.787546e-002, 1.130225e-002, 1.272319e-002, 1.034391e-002, 4.466087e-003, -5.349199e-003, -3.027226e-002, 5.020536e-003, -2.663148e-002, -4.592810e-002, 4.944268e-002, -5.135575e-002, 1.814029e-002, -3.469256e-002, 2.666215e-002, -5.673812e-002, 2.863562e-003, -1.985748e-002, 6.705326e-003, -1.646400e-002, -1.114912e-002, -6.906089e-003, 4.760390e-003, 3.751592e-003, 7.957988e-003, 1.224197e-002, 1.609386e-002, 2.625428e-004, -2.114638e-002, 1.065042e-002, -2.094706e-002, -1.386527e-002, -2.862858e-002, -1.913870e-002, -2.265236e-002, 3.050753e-002, -7.700262e-003, 1.331161e-002, -4.310730e-002, -6.957547e-003, -1.833992e-002, -4.812091e-002, 2.429754e-002, 2.370666e-003, -1.571802e-002, 9.438792e-003, 5.456266e-003, 4.160758e-004, 1.342100e-002, -1.098708e-002, 6.463484e-003, 2.862323e-002, -1.596825e-002, -2.922476e-002, -1.827541e-002, -5.290378e-003, -9.796140e-003, -4.884255e-002, 9.385489e-003, -5.426462e-003, -8.496038e-003, 2.263530e-002, -2.300182e-002, -3.359065e-002, 1.165231e-002, -2.424937e-002, -8.558967e-003, 1.025743e-002, 6.417671e-004, 7.733810e-003, -1.586514e-003, -6.695982e-003, 1.249955e-002, 7.488279e-004, -2.668262e-003, 1.606921e-002, -1.976984e-002, -4.535107e-002, -4.797351e-003, 7.284657e-003, -1.380080e-002, -1.350901e-002, 1.952836e-002, 7.664908e-003, -2.228245e-002, 2.012225e-002, -1.136928e-002, -2.851439e-002, -2.536665e-003, -9.340015e-003, -6.135796e-003, 6.447102e-003, 8.303082e-003, -8.927898e-003, 3.926125e-003, 2.711561e-003, 3.187306e-003, 3.671245e-003, 7.554640e-003, -1.922989e-002, 8.232853e-004, -1.033098e-002, -4.987093e-003, 9.748818e-004, 3.141614e-002, -6.194808e-003, -2.322626e-002, 1.077620e-002, 7.508646e-003, -8.175928e-003, -8.563582e-003, 2.634149e-003, -1.336602e-002, 9.916510e-004, 1.901532e-003, -3.280710e-003, -4.699687e-003, -2.246669e-003, 7.433593e-004, 6.035441e-003, 5.487317e-003, -7.703005e-004, -1.129779e-002, -1.902235e-002, 1.397909e-002, -9.808698e-003, -4.655858e-002},

{2.609012e-002, -3.400346e-002, -4.636973e-002, 8.649676e-003, 1.291042e-002, -5.190591e-002, -2.221065e-002, 5.880639e-002, -5.029656e-002, -1.129796e-003, -1.341616e-002, -1.825489e-002, -1.825489e-002, -1.341616e-002, -1.129796e-003, -5.029656e-002, 5.880639e-002, -2.221065e-002, -5.190591e-002, 1.291042e-002, 8.649676e-003, -4.636973e-002, -3.400346e-002, 1.031982e-001, -6.645174e-002, -7.192515e-003, 3.200457e-002, 2.719218e-002, -1.617471e-002, 2.256992e-002, -3.904313e-003, 2.736825e-002, -2.789549e-003, -2.940253e-002, 2.601179e-002, -4.753599e-002, -1.330588e-002, -4.571227e-003, 6.587701e-002, -4.138727e-002, 1.903302e-002, 6.617125e-002, -7.941725e-002, 3.196617e-002, -3.652845e-002, -3.054720e-002, -2.743135e-001, 6.667821e-002, 9.668086e-002, -1.754049e-001, 1.342121e-001, -3.220909e-002, -1.317327e-002, -1.789822e-002, -7.062092e-004, -3.872714e-002, 3.040198e-002, 6.275693e-004, 2.914538e-002, -1.883505e-002, 1.012218e-002, -4.363617e-003, 4.218000e-002, -9.960298e-003, -2.841923e-002, -2.614179e-002, 1.633081e-002, 6.861537e-002, 4.409723e-002, 5.440564e-002, 1.611411e-003, -1.215511e-001, 1.059194e-001, -7.180855e-002, -1.053644e-003, -4.428414e-002, -1.379327e-002, -3.666854e-002, 9.230615e-003, -4.288796e-002, 1.452025e-002, 9.938245e-003, 2.023558e-002, -3.537888e-002, 1.151773e-002, -5.637657e-002, -2.352593e-002, 3.957386e-002, -7.555570e-002, 1.484879e-001, -1.547225e-001, 2.746142e-002, -2.219653e-003, -1.200090e-001, 6.825818e-002, 1.021792e-002, -3.033795e-004, -1.794212e-002, 2.813774e-002, -1.757361e-002, 4.687322e-002, -4.243013e-003, -2.327763e-003, -2.116016e-002,

© ISO/IEC 2004 — All rights reserved


Copyright International Organization for Standardization
Provided by IHS under license with ISO
No reproduction or networking permitted without license from IHS
Not for Resale

5.545127e-003, -2.508917e-002, 1.219195e-002, -3.360897e-002, 3.037759e-003, 6.254855e-003, -3.709841e-002, 1.268553e-001, -1.213637e-001, 4.832694e-002, -4.552643e-002, -9.525580e-003, -1.417307e-002, -5.209847e-002, 6.287693e-003, -4.295810e-002, 1.661446e-003, -3.862984e-002, 3.878859e-002, -2.100849e-002, -1.955081e-002, -1.693939e-002, 1.786036e-002, 7.052459e-003, 2.763150e-002, -3.875323e-002, 1.811073e-002, 3.124676e-002, -1.679836e-003, 1.730000e-002, -1.350043e-001, 1.994600e-002, -5.161206e-002, 6.494761e-003, 6.868034e-002, -2.185938e-002, 2.546499e-003, -4.706297e-002, 4.498404e-002, 1.884382e-003, -3.352049e-002, -5.659010e-002, 4.361101e-004, 9.567302e-003, 1.929949e-002, 2.868982e-003, 1.505874e-002, 4.016198e-002, 5.845135e-002, -1.795826e-002, -6.265418e-002, -1.936496e-002, 4.481764e-002, 4.975592e-002, -7.741862e-002, -1.188888e-002, -1.651537e-002, -3.564749e-002, 1.215735e-002, -1.192477e-001, 3.926975e-002, 3.955861e-002, -7.148233e-002, -1.907350e-002, 5.361402e-002, 2.254171e-002, -1.478759e-002, 9.398222e-003, 1.352957e-002, -7.324629e-003, -1.202864e-003, -2.931086e-003, -1.574907e-003, -7.341386e-003, 1.799658e-002, -5.883186e-002, 1.851327e-002, 5.406238e-002, -8.998542e-002, -6.414133e-003, -3.716436e-002, -7.501980e-003, 1.735201e-002, -4.521944e-003, -4.568373e-002, 3.723633e-003, 1.904571e-002, -4.034496e-003, -3.317965e-002, -1.137339e-002, 2.407289e-002, 1.853065e-002, -1.581862e-002, 2.269620e-002, 1.350141e-002, -1.327251e-002, 2.616930e-002, -3.106247e-002, 6.013802e-002, -6.534649e-002, -2.633633e-002, 2.558771e-002, -2.978157e-002, 1.343216e-002, -2.732239e-002, -1.033161e-002, -7.729785e-003, 1.497074e-002, 7.601716e-003, 1.532800e-002, -3.312666e-002, -1.890068e-002, 3.504828e-002, 1.383802e-002, -4.090854e-003, -4.413351e-003, -2.152218e-002, -3.251190e-003, 1.144831e-002, -5.478631e-002, 1.147230e-002, 2.416438e-002, -4.836659e-003, 4.768204e-002, -4.643431e-002, -1.524202e-003, -2.351314e-002, 2.182196e-002, -1.439098e-002, -2.611845e-002, 3.714256e-002, 2.847094e-003, -2.225043e-002, 1.554773e-002, 1.713973e-002, -8.089263e-003, 5.079544e-004, -6.010161e-003, 1.471794e-002, 4.099575e-004, -2.599171e-002, -9.171364e-003, 2.757992e-002, -2.470806e-002, -3.543643e-002, 5.402992e-002, -1.292353e-002, 1.821024e-004, -3.512615e-002, -1.703471e-002, 3.090088e-004, -1.570040e-002, 2.847552e-002, -2.828805e-002, -7.135899e-003, 2.600467e-002, 9.697538e-003, -9.390221e-003, 5.059550e-003, -6.900437e-003, 4.538847e-003, -7.396316e-003, 4.722397e-003, 9.498096e-003, -7.411272e-003, -6.725100e-003, 1.378718e-002, 1.517912e-002, -2.947127e-002, 5.985309e-003, 1.330339e-002, -1.280263e-002, -1.051999e-002, -4.969217e-003, 7.215630e-003, -3.823290e-002, 5.182645e-003, -4.017181e-003, -9.370002e-004, 6.287717e-003, -1.617456e-003, -9.628045e-003, -4.226707e-003, -7.745409e-005, -1.297127e-003, -3.860581e-003, -1.521703e-002, 1.484144e-002, 1.108175e-002, -1.952925e-002, 3.061151e-003, 2.534043e-002, -2.946991e-003, -1.656131e-002, -4.355340e-003, -1.530467e-002, 2.170698e-002, -2.238116e-002, -1.674629e-003, 8.600232e-004, -2.148923e-002, 3.595482e-003, 1.074210e-002, -5.570500e-003, -5.846788e-003, 1.569113e-004, 8.315252e-003, 5.608677e-003, -1.186611e-002, -1.904413e-003, 9.876335e-004, 1.904761e-002, 2.319659e-003, -3.431697e-002, 5.306295e-003, 1.719847e-002, -1.802802e-002, -6.730919e-003, -3.027569e-017, -5.219546e-003, 8.126209e-003, -2.131815e-002, 1.772904e-002, -9.845230e-003, -1.075815e-002, 1.342016e-002, -7.873224e-003, -1.217985e-002, 1.237900e-002, -3.879746e-002, 3.879746e-002, -1.237900e-002, 1.217985e-002, 7.873224e-003, -1.342016e-002, 1.075815e-002, 9.845230e-003, -1.772904e-002, 2.131815e-002, -8.126209e-003, 5.219546e-003, -2.490408e-001, 6.371772e-002, 6.113634e-002, -8.416228e-002, -1.785281e-002, -3.572265e-002, 2.174548e-002, -3.940369e-002, -4.544323e-002, 6.865405e-003, -3.405772e-002, -1.798920e-002, 3.266857e-002, 4.916491e-002, 2.204726e-002, -3.656958e-002, -4.540258e-002, 2.337377e-002, 1.359872e-002, -7.442230e-002, -2.389874e-002, 5.493176e-003, 1.167588e-001, 2.206967e-003, -2.487952e-003, -4.448351e-002, 4.132105e-002, 8.786276e-004, 3.689602e-002, -2.734480e-002, 2.397189e-002, -4.228820e-003, -2.717990e-002, -1.702633e-003, -2.607452e-002, 5.572590e-004, 7.405988e-003, 1.763538e-004, 2.240716e-002, 7.171874e-002, -7.407629e-002, 1.556280e-002, 8.245596e-003, 5.361073e-002, -5.926724e-002, -3.084605e-002, -9.324517e-002, 6.229717e-002, -8.945789e-002, 7.488433e-002, -4.497961e-002, 4.139814e-002, 5.053152e-002, -5.649677e-002, -1.821903e-003, -4.798981e-003, -5.828058e-002, 1.972349e-003, 1.925814e-002, 1.835124e-002, 1.585391e-002, -2.810167e-002, -9.350637e-002, 3.861362e-002, 3.146980e-002, 3.625339e-002, -4.778096e-002, -4.096912e-002, 8.384900e-002, 5.675457e-002, -2.962950e-002, -1.737467e-003, 6.209548e-002, -5.997189e-003, 8.361954e-003, -4.447547e-002, 2.962110e-002, -3.026552e-002, -6.217729e-002, -1.114100e-002, 2.347958e-002, -1.992497e-002, -1.401697e-002, 5.284468e-002, -3.849674e-003, 2.082467e-002, 3.359796e-002, -4.796201e-002, -3.194028e-003, 8.317141e-003, 4.255000e-002, -2.428172e-002, -4.282195e-002, 2.598506e-002, 8.930848e-002, -7.736930e-002, -3.750922e-002, 6.651301e-002, -1.836952e-002, -1.362180e-002, 5.429079e-003, -1.241842e-002, 2.464593e-002, 3.389235e-002, -1.569635e-002, -1.016016e-002, 3.823973e-003, 8.171837e-002, -4.794622e-003, -8.311831e-002, 9.231190e-002, -1.328919e-001, -4.912869e-002, 5.247937e-002, -3.659903e-002, -1.615645e-002, 5.955229e-002, -2.753069e-002, -1.555446e-002, 1.036139e-001, -6.913117e-002, 2.477135e-003, 1.381715e-002, -5.457798e-003, 2.637659e-002, 1.646472e-002, -6.843515e-003, -6.042768e-005, -4.045487e-002, 1.267621e-002, 2.997162e-002, 8.615888e-003, 4.390437e-002, -4.558310e-002, 1.074897e-001, 4.514965e-002, -4.439050e-002, 8.777358e-002, -4.968071e-002, 7.209807e-003, 1.952898e-002, 4.916371e-002, -2.593318e-002, -


© ISO/IEC 2004 — All rights reserved
--`,,```,,,,````-`-`,,`,,`,`,,`---

Copyright International Organization for Standardization
Provided by IHS under license with ISO
No reproduction or networking permitted without license from IHS
Not for Resale

3.257732e-002, 1.320433e-002, 3.102045e-002, 6.390975e-003, 4.956603e-004, 2.577630e-002, 2.485193e-002, 6.464236e-003, 2.857153e-002, -3.648557e-002, -1.725966e-003, 3.357825e-002, -2.916357e-002, 6.300038e-002, -3.445584e-002, 1.910267e-002, 2.432706e-002, -1.992368e-002, -1.396636e-002, -1.129348e-002, 4.266869e-002, -5.104131e-003, -4.120375e-002, 5.570009e-002, 1.431299e-002, -3.953564e-002, -7.633102e-004, 3.899429e-002, 2.059113e-002, -2.681337e-003, -1.002444e-002, -1.813061e-002, 6.452605e-002, 7.472549e-003, -6.182904e-002, 1.696266e-002, 3.386623e-002, -2.747880e-002, -2.911501e-002, -2.739741e-002, 4.394785e-002, 2.829354e-002, -2.931991e-003, -9.088025e-003, -1.932570e-003, 2.537754e-002, -2.282086e-002, -3.864231e-002, 1.416277e-002, 2.378756e-002, 5.640192e-003, -8.864870e-003, -2.747059e-003, -5.145814e-004, 1.067231e-002, -2.885120e-002, 1.463676e-002, 3.725614e-002, -5.967728e-002, -1.467923e-002, 2.526829e-002, -7.453437e-003, 3.470368e-003, -2.388420e-002, -6.514743e-002, 2.939453e-002, 3.017456e-002, -2.971944e-004, 5.173214e-003, 4.531945e-003, 1.062255e-003, 8.150402e-003, -1.386642e-002, 9.106732e-005, 4.393446e-003, 4.704562e-003, 3.092589e-003, 3.274329e-003, 2.505189e-003, -7.074347e-003, -9.038939e-003, -3.042685e-003, 1.774403e-002, -3.984520e-002, -1.446189e-002, 2.724328e-002, 1.743638e-002, 1.365871e-002, -3.301547e-002, 1.456613e-002, 2.466964e-003, -9.133843e-003, 1.326609e-002, 1.482756e-002, -8.970157e-003, -6.277046e-003, -7.684994e-004, 7.396316e-003, 4.469844e-003, -6.037405e-003, -8.649701e-003, 4.726857e-003, -7.045907e-003, -3.598773e-002, 1.481163e-002, 1.022669e-002, 3.715312e-003, 1.327146e-003, -1.091133e-002, 1.489280e-003, -3.656753e-002, 4.376339e-002, -2.941054e-002, -1.051216e-002, 2.815436e-002, 1.559640e-002, -1.161540e-002, 8.398105e-003, -2.168610e-003, 5.442156e-003, 7.619545e-003, 7.648030e-003, 8.543875e-003, 1.220465e-002, -8.446644e-003, -8.627661e-003, 2.839136e-002, -3.139332e-002, -9.237592e-003, 2.848873e-002, -7.374983e-003, -3.504928e-004, -6.380931e-003, 2.509438e-002, -3.071986e-002, -5.540358e-003, 1.527540e-002, -6.012222e-003, -1.351094e-002, 2.872701e-002, -4.978090e-003, -1.596707e-002, 8.799972e-003, 1.211557e-002, 8.514311e-003, 1.263320e-004, -2.988661e-003, 2.853864e-003, -5.499403e-003, -1.271427e-002, 1.368775e-002, 1.295867e-002, -3.138146e-002, 6.812305e-003, 2.035560e-002, -2.608804e-002},
{8.764901e-002, -3.719054e-002, 5.693143e-002, -8.800662e-003, 1.537052e-002, -2.853375e-002, 7.303968e-002, -6.085449e-002, 7.140970e-002, -9.500253e-003, 6.290275e-003, 3.205225e-003, 3.205225e-003, 6.290275e-003, -9.500253e-003, 7.140970e-002, -6.085449e-002, 7.303968e-002, -2.853375e-002, 1.537052e-002, -8.800662e-003, 5.693143e-002, -3.719054e-002, 2.262586e-002, -1.154812e-002, 7.742916e-002, -4.809260e-002, 6.321464e-002, -1.298142e-002, -2.859463e-002, 8.246435e-002, -1.562446e-002, 4.139586e-002, 7.018539e-003, 1.891304e-003, 2.033309e-002, 1.959093e-002, 2.706249e-002, -1.994845e-002, 8.374075e-002, -1.110487e-002, 5.790823e-004, -3.889051e-004, 1.309572e-002, 8.467421e-002, -4.939836e-002, -3.649713e-002, 1.430233e-002, -7.124131e-002, 1.088712e-001, -1.052888e-002, -1.965910e-002, 4.886755e-002, -1.751305e-002, 4.342338e-002, -3.296294e-003, 5.231364e-003, -4.067066e-005, -1.408593e-002, 6.445326e-003, 2.242071e-002, 2.454967e-002, -3.426880e-002, 6.175475e-002, -3.938324e-002, 4.629808e-002, 1.185916e-001, -1.489548e-001, 6.930698e-002, 1.049902e-001, -6.742262e-002, 3.416204e-002, -8.157847e-002, -6.579877e-002, 7.090425e-002, -1.152682e-002, 4.343112e-002, -2.239557e-003, 2.531105e-002, 1.249959e-002, -2.513829e-003, 1.645498e-002, 2.592911e-002, 2.337786e-002, -4.215387e-003, 5.063761e-002, -2.610767e-002, 6.159060e-002, -6.146899e-002, -2.726888e-002, 1.052357e-001, -1.005373e-003, -1.469751e-001, 1.221656e-001, -4.121529e-002, 7.657291e-002, 1.757447e-002, -8.250113e-002, 3.339960e-003, -2.425565e-002, 1.643673e-002, -4.211237e-002, -3.637853e-002, -1.332960e-002, -1.298227e-003, 5.239516e-004, 1.225365e-002, 8.485693e-003, -5.652252e-002, -2.311295e-004, -2.350142e-002, -4.741357e-002, 1.563054e-001, -1.247954e-001, 1.416274e-001, 3.264013e-002, 5.586406e-002, -1.632503e-002, 2.142931e-002, -1.099972e-002, 7.658852e-002, -3.023222e-002, 2.811951e-002, 1.526873e-002, 5.249038e-002, 3.299350e-002, 3.183875e-003, 3.205956e-002, 1.110875e-002, 2.326746e-002, 1.366404e-002, 1.761617e-002, -2.941550e-002, 1.658628e-002, -2.840314e-003, -3.187381e-002, -6.004148e-002, -1.907911e-002, 5.401233e-003, -7.584363e-002, 6.330879e-002, -8.601338e-003, 8.497900e-004, -1.440721e-002, 4.664263e-002, 5.168869e-004, 3.134501e-002, -6.420530e-003, -1.081300e-002, -2.304104e-002, 2.817589e-002, 1.469760e-002, -3.686121e-002, -7.508108e-003, 2.110072e-002, 2.070555e-002, -2.482467e-002, 2.701674e-002, -2.933786e-002, 8.866181e-002, -5.845708e-002, -4.632831e-003, 3.654060e-002, -1.797328e-002, -3.031389e-002, 6.175334e-002, 3.007292e-002, -3.623541e-002, 1.887781e-002, -1.081898e-002, 7.702540e-003, -7.840128e-003, -2.642331e-002, 1.742231e-003, -5.552668e-003, -7.851627e-003, -2.046862e-002, 6.169732e-002, 7.753546e-003, -1.988437e-002, 6.998897e-002, -7.467107e-003, -4.976502e-002, 1.189728e-002, -1.924276e-003, 2.309839e-003, 3.536964e-002, 3.027733e-002, -5.437500e-002, 3.876186e-002, 3.297988e-002, -2.241946e-002, 6.270531e-003, -3.158401e-003, -1.900287e-002, -6.753301e-004, 1.109567e-002, 2.267971e-002, -1.727361e-002, -2.055514e-002, -3.039897e-002, 3.589695e-002, -4.272149e-003, -3.455746e-002, 1.262143e-002, 6.294711e-002, -1.981903e-002, 3.504363e-002, 2.353170e-002, 1.544104e-002, -2.804467e-002, 3.905289e-002, -9.544785e-003, 5.780432e-003, 8.307026e-003, 3.674917e-003, -3.433968e-003, -1.425990e-002, -2.640269e-002, -7.609299e-003, 9.505042e-003, 4.929314e-002, -2.052227e-002, -2.583253e-002,

© ISO/IEC 2004 — All rights reserved


--`,,```,,,,````-`-`,,`,,`,`,,`---

Copyright International Organization for Standardization
Provided by IHS under license with ISO
No reproduction or networking permitted without license from IHS
Not for Resale

1.520895e-002, -1.424053e-002, 2.835951e-002, 1.987963e-002, -3.341528e-002, 5.345634e-002, -1.931766e-002, 2.938333e-002, 1.521714e-003, -2.644581e-002, 2.383726e-002, 1.866615e-002, -1.530457e-002, 2.955534e-002, 6.953451e-003, -1.623369e-002, -1.847396e-002, -2.061111e-003, -1.733402e-002, 3.860286e-003, 2.065610e-002, 1.371817e-002, 5.060975e-003, -8.576042e-003, 7.097371e-003, 1.423490e-002, -1.452285e-002, -3.954800e-003, 2.806410e-002, 6.543909e-002, -3.460633e-002, 3.049071e-003, 4.081980e-002, -2.758902e-002, 3.873219e-003, 2.636286e-003, -5.115197e-003, 1.583570e-002, -1.259723e-002, -1.140583e-002, -1.683078e-003, 5.297020e-004, -7.323947e-003, 6.906304e-003, 9.074478e-003, -1.440051e-002, 2.600070e-002, 7.353256e-003, -4.467440e-002, 5.828331e-002, 2.563589e-002, -2.913859e-002, -1.428382e-002, 3.913254e-003, -2.891239e-003, -1.071383e-003, 3.129976e-002, -7.836079e-003, -8.387939e-003, 9.625530e-003, 8.873924e-003, 5.598841e-003, -4.564944e-003, -6.652696e-003, -5.137772e-003, -1.561717e-002, 1.143637e-002, 1.454100e-002, 1.836411e-003, -1.143785e-002, 3.723314e-003, 2.047469e-002, 6.268059e-003, -1.169377e-002, 3.437298e-002, 4.740761e-002, -2.979230e-002, 1.688656e-002, -1.845293e-002, 2.858940e-002, -1.838786e-002, -7.548891e-003, 2.325936e-002, -8.337607e-004, -1.032037e-002, -6.161538e-003, 4.075602e-003, 2.452885e-003, -5.638793e-003, -1.110258e-002, 6.915727e-003, 1.085918e-002, 9.812522e-003, -1.187076e-002, 1.184623e-002, 1.243175e-003, 3.224772e-002, -3.393018e-002, 1.390651e-017, 5.860608e-003, -4.181574e-003, -6.076899e-003, 2.237239e-002, -3.403119e-002, 3.879241e-002, -6.949406e-003, 7.813644e-003, 5.019799e-003, 2.608116e-002, -1.191745e-003, 1.191745e-003, -2.608116e-002, -5.019799e-003, -7.813644e-003, 6.949406e-003, -3.879241e-002, 3.403119e-002, -2.237239e-002, 6.076899e-003, 4.181574e-003, -5.860608e-003, 1.483417e-001, -1.598611e-001, 7.056297e-002, -6.111901e-002, 4.712175e-002, 1.015858e-002, -9.646745e-003, 6.685473e-002, -1.596819e-002, -2.648836e-003, -4.264241e-003, 4.065986e-002, 5.854092e-003, -1.714962e-002, -4.218820e-002, -1.995872e-002, 2.061723e-002, -1.882375e-002, -3.317627e-002, 3.258922e-002, -2.868027e-002, 4.596965e-002, -1.532464e-001, -1.603061e-001, 1.536258e-001, -1.204048e-001, -5.969550e-003, -8.775519e-002, -1.066509e-002, 6.365091e-002, -5.824981e-002, -8.601540e-004, -1.118962e-002, 1.593182e-002, -4.610811e-002, -2.930472e-002, -1.404546e-003, -2.269734e-002, -2.763743e-002, -6.985222e-002, 4.254612e-002, -1.026574e-002, -5.078230e-002, -2.188914e-002, -6.316357e-002, 1.395251e-001, 7.591609e-002, -1.096531e-001, 1.191900e-001, -5.961532e-002, 1.265124e-001, -6.457621e-002, 4.859081e-003, 6.298874e-002, -4.130715e-002, -5.954405e-003, -3.320755e-002, -3.510082e-003, 1.526067e-003, -3.762629e-002, -1.010584e-002, -4.221562e-002, 4.532915e-002, -1.139654e-002, -5.868198e-002, 9.931995e-002, -1.266250e-002, -1.449667e-002, -1.025443e-001, -7.778317e-002, 6.355846e-002, 2.135869e-002, 1.210461e-002, -5.486129e-002, 9.120560e-002, -6.346855e-002, -2.241487e-002, 3.845350e-002, -2.857905e-002, -1.076061e-002, -3.667564e-002, -2.944725e-002, 3.229492e-002, 2.726255e-002, 5.522364e-002, -2.667771e-002, -2.725076e-002, 7.066765e-002, -4.625164e-002, -4.103670e-002, 1.027960e-002, 3.358318e-002, -2.047837e-003, -7.173062e-002, 6.455560e-002, -1.625633e-002, -4.278992e-003, -8.880879e-002, 5.051053e-002, -8.961090e-003, -3.535825e-002, 1.705245e-002, -2.216533e-002, 1.687778e-002, -4.342774e-003, -1.983631e-002, 3.399285e-002, -9.399046e-003, -1.023718e-002, 6.303842e-002, -3.214686e-002, 3.250881e-002, -8.102469e-002, 6.085844e-002, -5.389252e-002, 7.035215e-002, -1.830435e-002, -9.506116e-002, 4.636277e-002, -1.875524e-002, 6.221112e-002, -4.607708e-002, 1.293539e-002, 9.336606e-003, -6.724127e-002, -1.759571e-002, -2.094238e-002, 2.587514e-003, 1.136268e-002, -4.851210e-003, -1.248343e-002, -3.750054e-002, -8.200007e-002, 2.263377e-002, 1.428609e-002, 3.721280e-002, 2.258504e-003, -1.926210e-002, -3.613520e-002, 1.142564e-002, 7.799322e-003, -2.289589e-002, 1.877562e-002, -3.754131e-002, -1.313526e-002, -5.422992e-003, -5.427236e-002, -3.612599e-003, -1.782084e-002, -2.017571e-003, 7.967764e-003, -1.274609e-002, 2.787837e-004, 8.063906e-003, 1.923965e-002, 2.254637e-002, -5.030661e-002, -2.354609e-002, -4.274278e-002, -5.082801e-002, 8.120952e-003, 4.050836e-002, -7.093704e-002, 2.882460e-002, -3.919687e-003, -2.181513e-002, -2.937882e-002, -2.880022e-002, -3.237467e-002, 6.047046e-003, -2.585645e-002, 4.820470e-003, -1.644282e-002, -9.318765e-003, 2.297950e-002, -1.836466e-002, -1.126177e-002, -5.410144e-003, 8.383424e-003, -1.564404e-002, -8.791375e-003, 4.769215e-002, -2.062617e-002, -2.262240e-002, -6.609678e-003, 2.514249e-002, -3.191403e-002, 1.039310e-002, 9.641326e-003, 7.765209e-003, -8.274665e-003, -1.831802e-002, -2.377264e-002, 1.438760e-002, -2.951483e-002, 7.002840e-003, 4.053484e-004, -2.627295e-002, 9.871852e-003, 1.446563e-002, -9.894612e-003, -1.465466e-002, -3.233593e-003, -1.497604e-002, 3.099887e-002, -6.690693e-002, -1.566164e-003, 6.346398e-003, 2.610380e-002, 1.550973e-002, -3.180357e-002, -6.485081e-003, -2.913269e-002, 5.203428e-003, -2.304383e-003, -1.673967e-002, -2.248467e-002, 1.068006e-002, -1.318982e-003, -5.679745e-003, 3.777168e-003, -8.342468e-003, -4.969563e-003, -1.524079e-002, 1.810125e-002, -2.501326e-003, -3.306631e-002, -1.975801e-003, 2.060019e-002, -2.187639e-002, 2.726297e-002, -1.249341e-003, -3.822489e-003, -1.483634e-002, -2.639614e-002, 1.516279e-002, -1.034562e-003, 3.865291e-003, -2.784944e-003, -2.188899e-002, -1.264908e-002, 1.709525e-002, 7.654458e-003, -1.161560e-002, -7.847091e-003, 3.769777e-003, -5.997898e-003, -5.048329e-003, 2.650454e-002, -1.085259e-002, -1.439977e-002, -1.231834e-002, 2.652901e-003, -2.778606e-002, 3.332192e-002, -8.123350e-003, 4.960824e-003, -1.140792e-002, -1.517797e-002, 2.596941e-003, -4.032181e-003, -1.569679e-002, -7.525230e-003, -


© ISO/IEC 2004 — All rights reserved

Copyright International Organization for Standardization
Provided by IHS under license with ISO
No reproduction or networking permitted without license from IHS
Not for Resale

2.590415e-003, 6.068579e-003, 8.808047e-003, 1.974104e-003, -1.409473e-002, -5.110098e-003, 3.397720e-003, -8.292438e-003, 5.795528e-003, -1.720434e-004, -2.398065e-002, -3.460195e-003, 3.490046e-002, 2.152861e-002, 7.408193e-003, -9.528130e-003, 4.625314e-003, -2.282549e-002, -1.442756e-002, 8.239960e-004, 2.996419e-003, -1.312838e-002, -8.974942e-003, 1.207457e-002, -2.739886e-003, 4.491308e-003, 8.766152e-003, -1.588243e-002, -3.446205e-003, -6.275729e-003, 8.407393e-003, -6.034146e-004, -3.229856e-002, 2.074986e-002, 6.505330e-003, -1.327507e-002},
{-8.479876e-003, 6.085839e-003, 1.705423e-002, -2.815145e-003, -3.097318e-002, 3.681167e-002, -5.301159e-002, 7.975517e-003, 5.573362e-002, -5.082351e-002, -2.321904e-003, 2.890324e-002, 2.890324e-002, -2.321904e-003, -5.082351e-002, 5.573362e-002, 7.975517e-003, -5.301159e-002, 3.681167e-002, -3.097318e-002, -2.815145e-003, 1.705423e-002, 6.085839e-003, 2.342352e-001, -1.264315e-001, 9.961995e-002, -6.411764e-003, 7.129924e-002, 9.836148e-003, -2.366098e-002, 4.337254e-002, -3.386341e-002, 7.767258e-003, -1.413209e-002, 1.349417e-002, -4.132924e-002, -9.372237e-003, 4.253990e-002, -4.329770e-003, -2.507415e-002, 3.621602e-003, 3.666354e-002, 2.625273e-002, -2.014437e-002, 6.862224e-002, -8.202159e-002, -2.569175e-002, 9.124943e-002, 2.085551e-002, -3.811906e-003, 1.706445e-002, -3.701336e-002, 1.065068e-001, -4.276261e-002, -1.756126e-003, -4.666666e-004, 2.966125e-002, -1.228128e-002, -1.210399e-003, 2.417324e-003, 1.120355e-002, 8.452762e-004, 3.982764e-002, 6.096462e-002, -8.120403e-002, 1.319980e-002, 3.430840e-002, 1.768988e-003, 4.037976e-002, 8.443064e-002, 3.148961e-002, -9.211135e-002, 1.029357e-001, -5.750463e-002, 4.540194e-002, -1.751943e-002, 1.245521e-002, -2.086542e-002, 5.553443e-003, -2.717906e-002, 2.475632e-002, -8.655895e-003, 4.994023e-003, 3.069625e-002, -7.531488e-003, -7.328395e-002, 2.990677e-002, 4.633541e-002, -4.031418e-002, 7.988632e-002, -1.293101e-001, 6.930691e-002, -7.753066e-002, 1.544782e-001, -1.896991e-002, 3.684488e-002, 5.590298e-003, -3.932334e-003, 5.281800e-003, 3.022416e-002, 5.941382e-002, -3.179971e-002, 7.508419e-003, 1.009866e-002, -1.462047e-002, -3.705886e-002, -6.280052e-002, -7.395988e-003, 1.855373e-002, -5.523698e-002, -4.667466e-003, 2.426748e-002, 1.150052e-002, -1.355020e-002, 1.155524e-001, -4.150133e-002, -8.394556e-002, 5.387893e-002, 1.215444e-002, 3.276261e-002, 2.734946e-003, 5.130556e-002, 3.298479e-002, -1.014906e-002, 1.815448e-002, 1.534620e-002, 2.424975e-002, 1.517826e-002, -9.419727e-003, -3.936993e-002, -3.714639e-002, -1.504173e-002, 3.649352e-002, -1.364625e-002, 1.672175e-002, -2.766686e-002, 1.029065e-001, -1.156579e-002, 1.668943e-001, -4.157666e-002, 2.474393e-002, -2.541272e-002, 1.400349e-002, 4.056820e-002, -5.488422e-002, 1.392282e-002, -1.216168e-002, -3.289914e-002, -5.738041e-003, -1.725662e-002, -7.898862e-003, 2.668823e-002, -1.216222e-002, -2.761781e-002, 5.317164e-003, -4.403309e-002, 7.214734e-002, 9.541290e-003, -1.367917e-002, -8.155526e-004, -9.932395e-002, -2.872799e-002, 9.014415e-003, -1.676178e-002, 3.155581e-002, 1.321920e-002, -4.782917e-002, 8.431240e-002, -1.524909e-002, -2.865275e-002, 1.540560e-002, 1.826845e-002, 2.729976e-002, -1.865916e-002, -2.329953e-003, 3.398037e-002, -4.094531e-003, -4.085864e-002, 2.893388e-002, -5.214125e-002, 1.829271e-002, 6.599892e-002, -8.457716e-003, 4.469204e-002, -8.537813e-002, 9.998080e-003, 4.051012e-002, 5.394287e-003, 1.019494e-002, 5.199035e-002, -3.079445e-002, -2.373419e-003, 1.107606e-002, -9.102706e-003, -4.688702e-003, -3.287615e-003, -3.719190e-002, -2.114159e-002, -1.116025e-002, 1.326860e-002, 7.040212e-003, -5.527394e-002, 3.015061e-002, 6.005705e-003, 2.870645e-002, -1.253969e-002, 7.387719e-002, -5.550068e-002, 5.942807e-002, -6.059807e-003, 4.119264e-003, 1.111093e-002, -5.446797e-002, 9.303797e-003, 1.416311e-002, 1.467969e-002, 2.058330e-002, -1.390987e-003, 9.415306e-003, 1.966374e-002, -1.244523e-002, -1.607212e-002, -9.243218e-003, -4.122244e-003, 1.005531e-002, -3.475368e-002, 1.266834e-002, 3.201481e-002, 6.027112e-004, 4.206428e-002, 1.173707e-002, 9.691941e-003, 1.391218e-002, 3.199439e-002, -3.622382e-002, 2.409758e-002, 1.954229e-002, 5.645702e-003, 1.882462e-002, 1.326091e-002, 3.356909e-003, -1.049579e-002, -9.694574e-004, 5.321101e-003, 1.655949e-002, -1.804301e-002, -3.165405e-002, 1.384818e-002, -3.295422e-003, -4.502316e-002, -9.565799e-003, 8.578072e-002, -4.850419e-002, 1.018568e-002, -3.752633e-003, 6.232651e-003, 1.275132e-003, 1.295408e-002, 3.087233e-002, -1.814538e-002, 1.951805e-002, 2.761033e-002, -2.588143e-003, -1.316232e-002, 6.402757e-003, 2.188126e-003, 3.607286e-003, -3.833809e-003, 5.482866e-003, -6.798594e-003, -5.515910e-002, -6.870077e-003, 9.082804e-003, -1.527259e-002, 1.386128e-002, -9.468245e-003, -1.582675e-002, 3.318563e-002, 1.136125e-002, 2.399108e-002, -1.750859e-002, -3.650952e-002, 2.571672e-002, 1.827889e-002, -6.793112e-003, -3.439537e-003, 2.991787e-003, 9.027567e-003, 4.858331e-004, 8.053295e-003, 5.499287e-003, 1.677039e-004, -3.053289e-002, -5.540067e-003, -2.205770e-002, -2.855357e-002, 1.627048e-002, 3.744830e-002, 1.925122e-002, -6.610991e-002, 5.928129e-002, 4.728250e-002, -5.017271e-002, -2.289296e-003, 2.667869e-002, -8.503505e-003, 1.646717e-002, 5.762552e-003, -1.020672e-002, 4.113258e-003, 2.732644e-003, -1.567479e-003, -3.855625e-003, 6.948214e-003, 1.277251e-003, -1.809952e-002, -4.131597e-002, 5.717486e-003, 5.222029e-003, -3.574598e-002, 4.701546e-002, 3.208639e-002, -1.857200e-017, -1.114625e-002, 1.607624e-002, 3.476889e-003, -8.564744e-003, -1.089859e-002, 9.544291e-003, 1.985458e-002, -1.278514e-002, -7.476246e-003, 2.281793e-002, -4.824127e-003, 4.824127e-003, -2.281793e-002, 7.476246e-003, 1.278514e-002, -1.985458e-002, -9.544291e-003, 1.089859e-002, 8.564744e-003, -3.476889e-003, -1.607624e-002,

© ISO/IEC 2004 — All rights reserved


Copyright International Organization for Standardization
Provided by IHS under license with ISO
No reproduction or networking permitted without license from IHS
Not for Resale

1.114625e-002, 7.864232e-003, -1.854830e-001, 8.783518e-002, 6.204525e-002, -9.427994e-002, 4.956323e-002, 1.984580e-002, -2.350230e-002, 3.535267e-002, 3.179341e-002, 8.966251e-003, -6.399587e-003, -1.603070e-004, 1.430027e-002, -3.954114e-002, -1.169577e-002, -4.660350e-002, -4.634057e-002, 8.730090e-002, -1.530925e-001, 5.852746e-002, 4.459956e-002, -1.569389e-001, 4.199610e-002, 3.739260e-002, -5.400937e-002, -3.281267e-002, 6.948945e-003, 3.680737e-003, 4.362765e-003, 1.478877e-002, 8.018086e-003, 3.358563e-002, 1.755314e-002, -4.895705e-003, -3.256715e-002, -6.553383e-002, 1.856298e-003, -8.154277e-003, 1.623083e-002, -4.338615e-002, 2.554939e-003, 1.733152e-002, 3.435596e-005, -6.648400e-002, -1.952846e-003, -1.938966e-001, -4.068863e-002, 4.317786e-002, 3.670357e-003, -3.999308e-002, 2.705071e-002, 5.673957e-004, -4.865557e-002, -9.826801e-003, 2.043642e-003, -1.738677e-002, -1.570745e-002, 1.353174e-002, 1.674168e-002, -7.721138e-004, 5.808257e-003, -3.379768e-002, 2.863465e-002, 2.288447e-002, 1.792674e-002, -5.932377e-002, 4.789011e-002, 5.496216e-002, 2.424423e-002, -1.345333e-001, 2.053503e-002, -3.014559e-002, -4.252565e-002, 1.754351e-002, 4.183737e-002, 6.844948e-003, 9.325326e-004, 2.409771e-002, 3.928187e-003, 4.268537e-003, -1.578706e-002, -1.236106e-002, 1.734916e-002, -1.518211e-002, -6.001637e-003, 1.260326e-002, -3.264084e-002, -3.423005e-003, -6.573349e-002, 5.906615e-002, -9.944994e-002, 3.339715e-002, -5.392383e-002, -5.212928e-002, 7.395616e-002, 6.157591e-002, 2.200523e-002, -2.984402e-002, 2.188618e-002, 3.553518e-002, -1.979988e-002, -2.370890e-002, 1.288678e-002, 1.898419e-002, -1.517178e-003, -2.366099e-002, 3.367182e-002, -2.342739e-002, -3.016362e-002, -1.598379e-002, -5.672554e-002, 4.311454e-002, 4.104135e-003, -4.224882e-002, -8.303167e-002, -2.830548e-002, 6.231585e-003, 1.185271e-002, 2.340063e-003, -4.414828e-002, 3.624860e-003, -6.061939e-003, -4.570794e-003, 5.737474e-003, 4.138701e-003, -2.740602e-003, 2.933972e-002, -4.966335e-003, -5.044628e-002, -6.591882e-002, -5.475324e-003, 1.016652e-002, -2.311276e-003, 4.421270e-002, 1.432460e-002, -2.618261e-002, -4.981483e-002, -1.692070e-003, -5.477300e-003, -3.915065e-003, 2.796154e-002, -1.153029e-001, -2.367995e-002, 6.083476e-003, -2.720277e-002, 8.938655e-003, 2.375372e-002, 1.044125e-002, -3.625435e-004, -4.315148e-003, 1.903308e-002, -2.394875e-003, -1.164939e-002, -4.035367e-002, 2.323518e-002, 3.815419e-002, -6.490550e-002, 6.380671e-002, -1.239400e-001, 5.513347e-002, -3.156594e-002, 1.637142e-002, -2.483621e-002, -6.865289e-002, 4.923033e-002, 3.048737e-002, -3.243007e-002, 4.334307e-002, 1.607918e-002, -1.200244e-002, -1.416473e-002, -8.243709e-004, 7.268872e-003, 1.384307e-003, 6.119009e-003, -2.401106e-002, 2.098126e-002, -6.198803e-002, -2.246038e-002, 7.943169e-002, -7.191314e-002, -1.528057e-003, -2.497897e-002, 7.602727e-002, -7.308626e-002, -4.748485e-002, 3.245896e-002, -3.557638e-002, -3.253820e-002, 5.492338e-002, 7.828254e-003, -5.611726e-003, -2.109894e-002, -2.250353e-003, 1.143198e-002, 3.606140e-003, 1.720751e-002, -4.492353e-003, -7.461332e-003, -2.278533e-002, 2.540917e-002, 1.513431e-002, -5.663243e-002, 4.248150e-002, 4.108334e-002, -1.137457e-001, 4.533949e-002, -4.498166e-002, -1.245738e-002, -1.882766e-002, -1.893409e-002, 3.503052e-002, -8.948832e-003, 2.096276e-002, 2.841494e-003, -1.553293e-002, -9.111328e-003, 2.675185e-004, 4.437616e-003, -3.756394e-003, 1.496565e-002, 5.436752e-003, 3.334819e-003, -2.146337e-002, 1.161632e-002, -2.219552e-003, -1.213433e-002, -2.581764e-002, -3.728284e-002, 1.470611e-002, -3.964644e-002, -5.801366e-002, 2.438040e-002, 1.759561e-002, -2.875715e-002, 4.644082e-002, 2.402824e-002, -1.427642e-002, -1.955130e-002, 4.190266e-003, 4.002090e-003, 4.821447e-003, 1.004164e-002, 6.506883e-003, 9.573180e-003, 1.451646e-002, 1.898950e-002, -3.633143e-002, 2.107291e-002, -6.533914e-003, -2.220628e-002, -4.813198e-002, -3.124145e-002, -4.107375e-003, 2.525435e-003, -2.743631e-002, -6.197502e-003, 4.232585e-002, 2.418233e-002, -3.319468e-003, -1.863732e-002, 4.277920e-003, 7.808367e-003, 4.973022e-003, -2.720433e-003, 7.764561e-003, 1.725195e-002, 1.247449e-002, -3.333588e-003, -8.999853e-003, 2.313225e-002, -3.935527e-002, -3.568797e-002, 2.588891e-002, -3.520144e-002, 3.437361e-002, -2.925437e-002, -5.201338e-002, 9.643992e-003, -8.881486e-003, 1.901364e-002, 6.275919e-003, -3.511063e-003, 6.571086e-003, 7.744822e-003, -6.520534e-003, -4.711611e-003, 3.595648e-003, -4.638720e-003, 5.968889e-003, 1.818065e-002, 6.284261e-003, -1.970317e-002, -8.179505e-003, 6.087713e-004, 1.885820e-002, -6.724105e-002, -1.616969e-002},

{1.642398e-002, -1.474730e-002, 2.494143e-002, -2.800930e-002, 2.312739e-002, -1.708360e-002, -2.054174e-002, 9.840845e-003, -7.747190e-003, 2.077454e-002, -1.248306e-002, 1.234835e-002, 1.234835e-002, -1.248306e-002, 2.077454e-002, -7.747190e-003, 9.840845e-003, -2.054174e-002, -1.708360e-002, 2.312739e-002, -2.800930e-002, 2.494143e-002, -1.474730e-002, -1.505556e-001, 1.817482e-001, -7.785622e-002, 3.920904e-002, 3.086896e-002, 2.050556e-002, 3.658213e-002, 1.385230e-002, 4.395900e-002, 2.167050e-002, 4.629847e-002, 4.206591e-002, -1.218354e-002, 1.435751e-002, -1.368529e-003, 2.862895e-002, 1.975699e-002, 1.160116e-003, 6.049630e-003, 1.830971e-002, 5.357015e-002, -6.134528e-002, 1.638677e-001, 1.279727e-001, -1.869151e-001, 1.274949e-001, -2.589055e-002, 6.823611e-002, -1.915670e-002, -3.548011e-002, 2.943526e-002, -2.344737e-002, -1.260033e-002, -1.258759e-002, -1.221769e-003, 1.977908e-003, 1.151271e-002, 4.365195e-002, 1.308007e-002, -1.636591e-003, -5.195364e-002, -5.385111e-003, 9.951158e-003, -1.947743e-002, 6.029615e-002, -1.389494e-001, -9.005847e-002, 3.275121e-002, 7.966889e-003, -4.023512e-002, 5.016740e-002, -8.771301e-003, 7.159279e-002, -4.701839e-003, 3.141288e-002, 2.285023e-002, 1.548967e-002,


© ISO/IEC 2004 — All rights reserved

Copyright International Organization for Standardization
Provided by IHS under license with ISO
No reproduction or networking permitted without license from IHS
Not for Resale

1.685804e-002, 2.186597e-002, 3.198542e-002, -1.044135e-002, 1.122886e-003, 1.493033e-002, 4.559072e-002, -2.762328e-002, 4.374798e-002, -1.477842e-002, -4.475519e-003, 8.637051e-002, 4.229388e-002, 2.827025e-002, -6.167335e-003, 6.883607e-002, -3.659478e-002, 4.486454e-002, -5.369708e-002, -1.861605e-002, -6.367578e-003, 1.729731e-002, -2.911814e-003, -3.483564e-002, -2.681184e-002, -1.990388e-002, -1.561509e-003, -1.406306e-002, -8.720302e-003, -1.057000e-002, 9.082074e-002, -2.152606e-002, 3.491512e-002, 7.548621e-002, -1.430136e-002, -7.907856e-002, 1.163167e-002, 6.806971e-002, -7.742653e-002, 1.991268e-002, 4.811572e-003, 6.249194e-002, -1.231113e-002, 2.259683e-002, 2.287603e-002, -8.097790e-003, 1.327580e-003, -8.807614e-003, -1.670989e-002, -1.183304e-003, 2.425570e-002, -1.310938e-002, 3.517035e-002, -3.058070e-002, 2.254176e-002, -7.862589e-002, 9.763220e-002, 3.103680e-002, 8.715180e-002, -4.407034e-002, -3.589550e-002, 4.080381e-002, 3.710688e-002, -3.468477e-002, -5.487621e-002, 4.714205e-002, 2.753510e-002, 4.753541e-003, 3.511363e-003, -2.601869e-002, -4.370158e-003, -9.579063e-003, -1.917201e-002, 3.304736e-003, 8.109788e-002, -7.755196e-002, -8.919601e-003, 2.942749e-002, 6.238133e-002, 3.847139e-003, -6.232860e-002, -2.303874e-002, -1.416646e-002, 2.385675e-002, 6.700543e-002, -2.150939e-002, 1.064255e-002, 8.323527e-002, -1.559006e-002, 2.282769e-003, 1.327981e-002, -3.553120e-003, 3.233825e-003, 1.008470e-002, 4.748414e-003, 3.374933e-003, -1.460819e-002, -3.698393e-002, 6.575560e-002, -3.447925e-003, -3.254066e-002, 3.008369e-003, -7.190196e-003, -2.634961e-002, 1.047605e-002, 3.922938e-003, 4.302789e-003, -1.332330e-003, 3.896699e-002, 2.027588e-002, -2.850736e-002, 1.097407e-004, 2.740799e-002, 3.586482e-003, -1.293347e-002, -1.430405e-002, -1.836571e-002, -1.242189e-002, 1.000683e-002, 1.424086e-002, 3.258768e-002, -3.488431e-002, -1.729324e-002, 2.804417e-002, -2.705541e-002, -1.778503e-002, -2.539281e-002, 9.324469e-003, 7.551404e-004, -1.348331e-004, 5.731009e-002, -1.321360e-002, -1.247872e-002, 1.029213e-002, 2.210872e-002, -5.874707e-004, -1.060184e-002, -4.294466e-003, 4.828880e-003, 5.901225e-004, -1.002069e-002, -2.245644e-002, -2.673706e-003, 4.054396e-004, 5.691954e-004, -8.337538e-003, -3.084680e-002, 7.332143e-003, -1.289942e-002, 3.043173e-002, 2.722488e-002, -1.619101e-002, 5.275923e-002, -3.261136e-003, -2.559732e-002, 3.700989e-002, 1.575420e-002, -3.225447e-002, -3.324147e-003, 2.132533e-003, -4.454107e-004, 2.433003e-003, -5.772466e-003, -2.299152e-002, -7.292779e-003, -1.252231e-003, -1.109478e-002, 5.554797e-003, 4.519481e-003, 6.653136e-003, -4.166041e-003, 3.014461e-002, -4.923473e-003, -2.257213e-002, 5.074709e-002, -1.937247e-002, -1.360578e-002, 5.579171e-002, 2.540421e-003, -3.177878e-002, -6.678208e-004, 1.253606e-002, -7.584973e-003, -6.276465e-003, 2.793211e-003, -2.141397e-003, -1.580257e-002, -1.777972e-002, 7.283029e-004, 1.263320e-002, -2.459761e-002, -1.811104e-002, 4.044990e-002, 1.599064e-002, -1.170222e-002, 3.413373e-002, 9.365268e-003, -1.949875e-002, 2.603459e-002, 2.184846e-002, -1.914273e-002, -1.267928e-002, 1.609071e-002, 2.239951e-003, -1.096427e-002, -9.612819e-003, -7.896667e-004, 4.728993e-003, 6.324638e-003, 2.993426e-003, -7.508448e-003, -1.393781e-002, -2.634236e-003, 2.416117e-002, 5.264669e-003, 6.385172e-003, 6.719870e-003, -1.858304e-003, 1.029575e-002, -2.515851e-002, 2.882069e-002, 8.039703e-003, -1.387648e-002, 2.937897e-003, 3.089416e-002, -1.674068e-002, -1.091781e-002, 1.269143e-003, -3.862157e-003, -4.800134e-003, -5.308743e-003, -1.404932e-003, -2.683241e-003, -2.737735e-003, 1.855153e-003, -1.835655e-003, -6.277612e-003, 2.793606e-002, 1.108347e-002, 3.356207e-003, 1.328654e-002, 1.205637e-002, -5.992882e-018, -1.780286e-003, 9.316438e-003, -9.094879e-003, -1.455171e-003, -6.050491e-003, 1.646369e-002, -1.577886e-002, -2.437980e-002, 1.250586e-002, 1.752600e-002, -7.118383e-003, 7.118383e-003, -1.752600e-002, -1.250586e-002, 2.437980e-002, 1.577886e-002, -1.646369e-002, 6.050491e-003, 1.455171e-003, 9.094879e-003, -9.316438e-003, 1.780286e-003, -1.331514e-001, 3.953565e-003, -5.371582e-002, 5.550125e-002, 2.834660e-002, 3.033686e-003, -1.774271e-003, 7.614363e-003, 3.604789e-002, -9.829696e-004, 2.008276e-002, 2.673740e-002, -1.041474e-002, -2.645972e-002, -4.497423e-002, 9.539100e-004, -9.753701e-003, -2.028766e-002, 3.523577e-003, -3.217185e-002, 5.222510e-002, -5.092980e-002, 3.367589e-002, 6.213262e-002, -1.190481e-001, 1.452063e-001, -1.504961e-001, -4.628309e-002, 2.465432e-002, 2.571179e-002, -1.829653e-002, -4.675618e-002, 3.205428e-003, -2.165298e-002, -3.894100e-003, -1.741818e-002, -2.875089e-002, 2.611539e-003, -2.261514e-002, 1.514434e-003, 2.107597e-002, -3.856416e-002, -3.114143e-004, -1.153714e-001, 9.114854e-002, -9.951708e-002, -1.176673e-001, 6.193330e-002, -1.962691e-001, 1.074893e-001, -1.124493e-002, -1.316644e-002, -5.029544e-002, -2.072329e-003, 2.787180e-002, -1.614774e-002, 1.903825e-003, -2.087159e-002, 1.339162e-003, 2.182049e-002, -1.292829e-002, -7.477693e-003, -3.147941e-002, -2.766320e-002, -1.670161e-002, -1.039019e-002, 1.043771e-001, -1.137544e-001, 7.952114e-003, -6.767483e-002, -1.874833e-002, 1.780198e-001, -1.262820e-001, 2.664712e-002, 1.252060e-002, 2.406702e-002, 3.692445e-003, -2.026650e-002, 2.984567e-002, -1.807145e-002, -1.093675e-002, 6.555496e-003, 5.420351e-003, 2.819797e-002, -4.059559e-002, -3.990670e-002, 2.126456e-002, -4.243044e-003, 3.619836e-002, -1.947143e-001, 1.870393e-001, -2.771761e-002, 5.204518e-002, -9.533354e-002, -5.618173e-002, 8.750277e-002, -1.954140e-002, -1.223879e-004, -2.749395e-002, -4.260498e-003, 3.302246e-002, -4.133529e-002, -3.734226e-002, -2.386442e-002, -4.129523e-003, -6.580133e-003, -7.361120e-003, 3.415846e-002, -1.062105e-003, -2.898531e-002, -4.765811e-002, -6.916751e-002, 7.427590e-002, -5.806620e-002, -1.102451e-001, 2.032305e-002, 1.912052e-002, 1.031009e-002, -3.508545e-002, -

© ISO/IEC 2004 — All rights reserved


Copyright International Organization for Standardization
Provided by IHS under license with ISO
No reproduction or networking permitted without license from IHS
Not for Resale

1.921976e-002, -8.182058e-003, 6.640122e-003, -7.533745e-004, -4.842589e-002, -1.047390e-002, -1.298995e-002, 6.631405e-003, 5.149524e-003, -8.960832e-003, -2.533214e-003, -2.851917e-002, -7.163115e-003, 3.296271e-002, 2.559236e-002, -5.183700e-002, 3.912789e-002, -4.269846e-002, 2.738943e-002, -9.655327e-002, 3.998422e-003, 2.804147e-002, -9.552746e-002, 2.971126e-002, 1.771013e-002, -1.948537e-002, -3.752635e-002, 7.480595e-003, -1.452483e-002, -7.944907e-003, -1.264975e-002, -4.148308e-003, 7.955462e-003, -5.912083e-003, 2.607675e-002, -1.832383e-002, -1.210245e-002, 3.077586e-002, 9.561164e-003, 3.283923e-003, -2.011842e-002, -1.726772e-002, -3.351215e-002, -2.697398e-002, -1.167663e-002, 2.786520e-002, 7.656070e-002, -2.813741e-002, -5.202178e-002, 3.195837e-002, -9.706156e-003, -4.678294e-003, -1.445704e-002, 1.271623e-002, 1.360769e-002, -1.916010e-002, -1.408767e-003, -5.223629e-004, 3.126802e-002, -3.374997e-002, -2.071899e-002, 3.458776e-002, 7.573148e-003, -1.258510e-002, -6.414333e-002, 7.991472e-003, -5.682320e-002, 2.478103e-002, 3.986701e-002, -5.719615e-002, -2.906275e-002, 4.066556e-002, -1.497326e-002, 1.850793e-004, -4.789198e-003, 1.692511e-002, 7.024299e-005, 7.058174e-003, 2.476529e-002, -1.275293e-002, -5.043609e-003, 5.026108e-003, 3.387545e-002, -2.310132e-004, -6.471469e-002, 5.635728e-003, -2.402187e-003, -6.535867e-002, -3.138408e-002, 1.595978e-002, -1.688275e-003, -3.460914e-002, 5.484577e-002, -7.901001e-003, -4.099541e-002, 7.681480e-003, 8.412006e-003, 5.182994e-003, -1.230967e-002, 4.980756e-003, 1.394471e-002, -5.951573e-003, -9.449116e-003, -4.975916e-003, 1.732202e-002, -3.340295e-002, -1.797889e-002, 6.088873e-003, -1.936593e-002, -1.031854e-002, -3.470747e-002, 2.240430e-002, -2.793046e-002, -4.066228e-003, 5.433790e-002, -3.870854e-003, -4.432736e-002, 7.976030e-003, 1.527476e-002, -9.180518e-003, -3.090373e-003, 1.233073e-002, 1.135055e-002, 6.369819e-003, 1.768220e-002, -3.304777e-003, -1.742955e-002, -3.658406e-003, 6.219281e-003, -3.866142e-002, -3.107776e-002, 1.340687e-002, -1.768874e-003, -3.750837e-002, -2.287998e-002, 3.696973e-003, 3.089395e-002, -3.177323e-003, -2.013318e-002, -3.635377e-003, 1.872244e-002, -2.076924e-002, 3.025219e-003, 6.635904e-003, 4.495074e-003, 1.075018e-002, -1.739360e-003, 3.795720e-004, -7.975302e-004, -8.299860e-003, -1.864009e-002, -1.159232e-003, 1.167936e-003, -1.172878e-002, -9.815939e-003, 1.416719e-002, -1.917144e-002, 2.620014e-002, -1.365546e-002, -8.852105e-003, 7.525450e-003, 1.979690e-002, -1.031915e-002, -2.284164e-002, 2.386851e-003, 3.093332e-003, 5.218685e-003, -1.978042e-003, 6.315361e-003, -9.882496e-004, 5.598785e-004, 2.200537e-003, -9.448561e-003, 1.687532e-003, -1.632999e-002, -8.179373e-003, 4.270605e-004, 1.759141e-002, 8.203970e-003, -5.988282e-002},

{-3.003509e-002, -2.017493e-002, 8.574960e-002, -9.870159e-002, 5.314015e-002, -9.500481e-003, -2.250674e-002, 2.065038e-002, -1.545027e-002, 3.338636e-002, -1.158518e-002, 1.326954e-003, 1.326954e-003, -1.158518e-002, 3.338636e-002, -1.545027e-002, 2.065038e-002, -2.250674e-002, -9.500481e-003, 5.314015e-002, -9.870159e-002, 8.574960e-002, -2.017493e-002, -2.948365e-003, 1.351787e-003, 2.606094e-002, 7.517834e-002, -7.489626e-002, 2.823893e-002, 4.597426e-002, 1.856376e-002, -3.115870e-003, -6.661324e-003, 2.296591e-002, 4.531771e-002, -1.487983e-002, 1.352309e-002, -4.999717e-003, 4.416200e-002, -3.468372e-002, 5.256436e-002, 5.355554e-002, -1.388007e-001, 1.063164e-001, -1.200328e-003, 3.920799e-002, 1.368509e-001, 1.558517e-002, -1.509591e-002, -3.109856e-002, 8.041627e-002, 1.811263e-002, -2.236547e-002, 1.924655e-003, 2.816782e-002, -2.805559e-005, -2.931188e-003, -2.486483e-002, 3.327236e-004, -1.931294e-002, 3.367440e-002, -1.050897e-002, 4.163666e-002, -2.707460e-002, -2.581761e-002, 5.035347e-002, -1.626615e-002, 2.884559e-002, -6.439658e-002, -1.449989e-001, 3.785790e-002, 5.615150e-002, -3.123737e-002, 3.711394e-002, -4.745170e-002, -2.157577e-002, 9.092777e-003, 5.326548e-003, 1.945944e-002, 2.757566e-003, 3.723802e-002, -2.807423e-002, 1.738974e-002, 2.468537e-002, 4.401933e-002, 1.311162e-003, 2.607132e-002, -3.762007e-002, 7.272029e-002, -2.660291e-002, 3.121343e-002, 2.639312e-002, -5.770429e-002, 4.769916e-002, -1.730532e-002, 8.845959e-002, -2.779766e-002, -6.974945e-003, 3.733407e-003, 7.615776e-003, 1.754677e-003, -8.048480e-003, 1.702150e-002, -2.548412e-002, 1.061779e-002, 6.975184e-003, 1.381423e-002, -5.224461e-002, -2.413003e-002, 4.524196e-002, -2.698247e-002, -2.258994e-002, 9.949132e-002, -4.389094e-002, 5.948801e-002, 1.791159e-001, -1.646986e-001, 2.794658e-002, -4.270653e-002, 7.604161e-003, 3.303509e-002, -1.882853e-002, 1.084137e-003, -6.006145e-003, -1.302638e-002, -1.446861e-002, 2.130716e-002, -3.917402e-002, -1.337032e-002, 2.434941e-002, 1.907266e-002, -2.329165e-002, 1.061338e-002, 3.377501e-002, -2.193319e-002, -5.099933e-002, 3.015007e-002, -1.056888e-001, -1.174433e-001, 1.970108e-002, 7.320062e-002, -3.723802e-002, -2.062116e-003, -3.353967e-002, -1.191057e-002, 1.149621e-002, 1.848377e-002, -2.565555e-003, 2.089491e-002, 8.275710e-003, 5.851289e-003, -2.942236e-003, 1.559144e-002, 2.389676e-002, -9.231714e-003, -3.153910e-002, -1.330231e-002, -2.400414e-002, -1.633051e-002, 8.554784e-002, 4.324328e-002, 1.677859e-002, 4.065850e-002, -9.267914e-002, 2.052778e-002, 3.813126e-002, 3.082672e-002, 1.228625e-002, 4.954446e-003, 5.159316e-003, 9.303372e-003, 4.722140e-003, -6.249123e-003, 6.717778e-004, -1.291114e-002, 1.202954e-004, 4.365394e-003, -5.964581e-003, 1.159555e-002, 2.686570e-002, -2.191893e-002, 2.206959e-002, -8.320012e-002, -2.736683e-002, 5.554546e-003, 1.728864e-002, -3.259096e-002, 4.250575e-002, 8.546691e-003, -2.187787e-002, -1.316686e-002, 3.363520e-002, 1.138248e-002, -1.052557e-002, -1.017081e-002, -8.416647e-003, 4.598423e-004, 5.223355e-004, -6.309679e-003, 9.058582e-003,


© ISO/IEC 2004 — All rights reserved

Copyright International Organization for Standardization
Provided by IHS under license with ISO
No reproduction or networking permitted without license from IHS
Not for Resale

7.728814e-003, -1.975846e-002, -2.740952e-002, -2.208527e-003, 7.542710e-003, -1.552633e-002, 2.415397e-002, 9.831145e-003, -4.658701e-002, 3.604566e-002, -4.300333e-003, -2.203609e-002, 7.743082e-003, 2.719734e-002, 5.607699e-003, -1.826241e-002, -9.447765e-003, 2.724328e-003, -2.864543e-003, 2.502813e-003, -1.698659e-003, 3.249867e-003, 1.018919e-002, 1.784340e-003, 1.157118e-002, 8.002486e-003, 2.257763e-003, 1.853877e-002, 3.001730e-002, -3.395867e-002, 7.378139e-002, -2.337169e-002, 1.518744e-002, 1.622413e-002, -9.254918e-003, 3.295257e-002, -2.182177e-002, -7.830597e-003, 8.042795e-003, -6.365356e-004, -7.818358e-003, -8.987910e-003, -1.469142e-004, -4.140661e-003, -9.469930e-003, 1.917224e-002, 2.234471e-002, -2.279446e-002, 2.776948e-002, -3.560323e-003, 1.908279e-002, 6.146542e-003, -7.423567e-002, -2.076098e-002, -1.257084e-002, 2.669881e-002, 9.689215e-004, 2.304111e-002, -2.641714e-002, 1.130554e-002, 2.428260e-003, 6.553225e-003, -6.269443e-003, -1.566409e-002, -1.049686e-002, 4.186366e-003, -9.779849e-003, 2.096532e-003, 9.943585e-003, 3.383329e-003, 2.927292e-002, -1.843276e-002, 3.559944e-002, -4.609458e-003, 1.085184e-002, -2.566223e-003, -9.909125e-003, 5.396598e-003, 1.340125e-002, -1.932002e-002, 1.765375e-002, 1.724649e-002, -1.385650e-002, 6.721239e-003, -4.660719e-003, -1.549647e-002, -1.608214e-004, 2.832621e-003, 8.833331e-004, 7.853206e-003, -1.669243e-003, -8.102434e-004, 1.396807e-002, 3.249858e-003, 1.744025e-002, -1.547211e-003, -6.784604e-003, 2.566042e-003, -2.215570e-002, 2.012851e-002, -8.620508e-003, -4.403567e-003, 1.718401e-002, 6.328388e-004, 1.254386e-002, -2.569975e-002, 2.798963e-003, 3.324508e-003, -5.623763e-003, -4.179585e-003, 2.464381e-003, 2.452801e-003, 1.820682e-003, -9.114937e-004, 1.150443e-002, 1.189821e-002, -5.606993e-003, 1.554340e-002, -1.172144e-002, 2.906854e-003, -1.210500e-002, -1.238225e-002, 9.408841e-018, -4.341091e-003, 9.288168e-003, -1.203907e-002, 1.526911e-002, -1.815992e-002, 3.347232e-002, -1.278968e-002, 1.066953e-002, 2.920290e-003, -2.765346e-002, 8.508947e-003, -8.508947e-003, 2.765346e-002, -2.920290e-003, -1.066953e-002, 1.278968e-002, -3.347232e-002, 1.815992e-002, -1.526911e-002, 1.203907e-002, -9.288168e-003, 4.341091e-003, -7.346485e-002, 9.792004e-002, -2.058972e-001, 9.791473e-002, 4.042882e-002, -8.431184e-002, 8.808647e-003, 1.480667e-002, 2.247900e-002, -1.088043e-002, -2.378972e-002, -4.804275e-002, 1.382127e-002, -2.898138e-002, -5.309345e-002, 1.093724e-002, -1.114604e-002, -2.762856e-002, -4.913604e-002, 8.844995e-003, 8.369683e-002, -2.341644e-001, 1.243078e-001, -1.141705e-001, 7.367553e-002, 6.934997e-002, -8.262026e-002, -1.527776e-003, 1.219531e-001, -3.954293e-002, 2.705273e-002, -8.333355e-003, 1.500011e-002, -1.609408e-002, -4.426423e-003, 1.271896e-002, -1.004685e-002, -2.436580e-003, -3.251412e-002, 1.651049e-002, -5.626693e-002, 4.659432e-002, -1.138235e-002, -6.915838e-002, 8.619679e-002, 1.594866e-002, 6.600259e-002, -1.530069e-001, 8.222484e-002, 4.629727e-002, -2.304771e-002, -6.065624e-002, 8.152044e-002, -6.825387e-003, 5.073240e-002, -1.412300e-002, -1.924862e-002, -8.582082e-003, -6.203883e-003, 1.179581e-003, -4.225514e-002, -1.312773e-002, -3.062109e-002, 9.860649e-003, 7.896695e-003, 2.222442e-002, -2.161989e-004, 4.155328e-002, -6.871876e-002, -1.361497e-002, 1.886603e-002, -1.786848e-001, 1.697424e-002, 3.636755e-003, 1.350028e-002, -1.875912e-004, 2.557823e-002, -5.764391e-002, 3.448600e-003, -1.177639e-002, -1.085599e-002, -1.451760e-003, -3.082561e-003, 2.305816e-002, -3.373242e-002, -6.847931e-003, -2.833213e-003, -4.501309e-002, 7.271356e-002, 4.239452e-003, -7.173633e-002, 1.722737e-002, 1.305492e-001, -1.254656e-001, 1.441699e-001, -2.169288e-002, 1.078987e-002, 3.029759e-002, 6.318735e-003, -1.100332e-002, 4.505489e-003, -3.972945e-002, -1.850775e-002, -1.694768e-003, -1.865926e-002, 8.946850e-005, -2.510850e-003, 3.851933e-002, 3.978328e-002, -1.106776e-002, 4.259077e-002, -8.578516e-002, -5.049737e-002, 4.775596e-002, -7.997624e-002, -1.536039e-001, 1.106009e-001, -1.054161e-001, 1.127860e-003, 1.635696e-002, -7.048648e-002, 1.643486e-002, -4.042562e-003, -1.901437e-002, 2.820571e-002, 2.305706e-002, 5.977469e-003, 7.329633e-003, -1.231193e-002, -6.621019e-004, -5.190427e-002, -3.465622e-002, 5.923230e-002, -5.555370e-002, 6.972975e-002, 1.452797e-002, -6.316942e-002, 9.918131e-002, 4.242474e-003, -2.982307e-002, -9.653996e-003, 2.640217e-002, 9.269048e-003, 4.013920e-002, -2.545595e-002, 2.304927e-002, 1.027534e-002, -3.363446e-002, -7.164798e-003, -5.092299e-003, -1.036713e-002, 2.794038e-002, 1.938776e-002, 1.514173e-002, -8.144064e-003, -5.330086e-002, 2.838057e-002, -1.325870e-002, -2.491189e-002, -5.852203e-002, -8.222135e-003, 4.044342e-003, -5.376975e-002, 5.663729e-002, 9.570006e-003, -2.697696e-002, -4.890422e-002, 5.891944e-002, -1.807547e-002, -2.236056e-002, -6.369780e-003, -8.656136e-003, 5.786715e-003, -5.871786e-003, -1.738536e-002, 1.389313e-002, 4.588410e-003, -1.223418e-002, 5.195494e-002, -2.230078e-002, -2.178701e-002, -7.986086e-003, 4.154295e-002, -3.243232e-002, 1.409527e-002, 3.327557e-003, -5.252854e-003, -4.723757e-002, 7.178462e-003, 2.934874e-002, -2.202147e-003, -7.003273e-003, -1.915674e-002, -5.599576e-004, 6.338664e-003, -2.548590e-003, -6.632964e-003, 1.148499e-003, -2.221581e-003, -7.662612e-003, -6.387891e-003, 1.019837e-002, -4.265387e-003, -1.472237e-002, -2.891658e-002, -6.744588e-003, 1.747949e-003, 7.920950e-003, -2.473166e-002, 8.039676e-003, 7.673356e-003, -8.415713e-003, -5.587340e-003, -3.325127e-002, 3.470306e-003, 4.314154e-003, -1.716347e-002, -4.220900e-003, 3.835909e-004, -6.649134e-003, -3.625781e-003, -6.366420e-003, 4.836437e-003, 9.045710e-003, -1.833857e-002, 7.202214e-003, -1.359739e-002, 1.729742e-002, -1.612059e-002, 1.099245e-002, -7.237126e-002, 3.644457e-002, -1.115681e-003, -9.442655e-003, 2.159053e-003, -3.698705e-002, 2.846936e-002, -1.233611e-002, -1.729387e-002, -

© ISO/IEC 2004 — All rights reserved


Copyright International Organization for Standardization
Provided by IHS under license with ISO
No reproduction or networking permitted without license from IHS
Not for Resale

1.844263e-004, 7.641534e-004, 2.992242e-003, 8.151562e-004, -1.163331e-002, 9.077525e-004, -1.076495e-002, -2.345603e-002, 3.511798e-002, -1.466616e-002, -2.895024e-003, 9.581943e-003, 6.752213e-003, 2.729247e-002, -7.182968e-003, 1.512571e-002, -1.848007e-003, -6.055588e-003, 1.604630e-002, -1.229472e-002, -8.063456e-003, 2.850125e-003, -8.248494e-003, -4.463131e-003, -2.306629e-003, 1.521327e-004, -1.297021e-003, 2.312777e-003, -1.870753e-003, -2.723043e-003, 2.679093e-003, -5.726965e-003, 1.020364e-003, 1.970474e-002, -8.004701e-003, 8.685576e-003, -1.301112e-002, -4.456471e-002, 2.207442e-002, -1.407255e-002, 3.914423e-002, -2.047561e-002, -1.390693e-002, -3.528530e-004, -7.340298e-003, -6.799857e-003, -2.588175e-003, 7.485346e-004, 2.678900e-003, 1.160236e-003, -4.335524e-003, 2.266002e-003, 6.297353e-003, -2.893166e-004, 1.431063e-002, 7.694376e-003, -1.006225e-002, 3.240271e-002, -2.872615e-002, 2.620437e-002},

{-1.589862e-002, 2.566615e-003, 1.563226e-002, -7.689339e-003, 1.729790e-002, -1.777318e-002, 1.817595e-002, -1.278611e-002, -6.006678e-003, 4.851795e-003, 3.995665e-003, -1.407415e-002, -1.407415e-002, 3.995665e-003, 4.851795e-003, -6.006678e-003, -1.278611e-002, 1.817595e-002, -1.777318e-002, 1.729790e-002, -7.689339e-003, 1.563226e-002, 2.566615e-003, 7.348930e-002, 1.732156e-002, 7.324283e-002, -2.853987e-002, 1.800656e-002, 8.733586e-002, -5.999978e-004, 1.780004e-002, 2.139962e-002, -1.678120e-002, -1.686304e-002, -5.875879e-003, -1.759745e-002, -2.836128e-002, -1.146045e-002, -1.878011e-003, -1.254062e-002, 4.579472e-002, 5.409999e-002, -3.280620e-002, 5.794952e-002, -7.275579e-002, 9.760359e-002, -2.135687e-001, -1.999020e-003, 1.499631e-001, -2.222819e-002, -2.921720e-002, 6.206023e-002, 9.948787e-003, 3.946125e-002, 1.398796e-002, -8.409423e-003, -2.404633e-002, -7.231502e-003, 8.957087e-003, -2.566394e-002, -7.924739e-003, 1.292178e-002, -1.048101e-002, -7.536446e-002, 5.381989e-002, -2.565210e-002, -1.276210e-002, 1.035538e-001, 5.439520e-002, 1.328984e-001, -4.519717e-002, -1.434568e-001, 8.205165e-002, 2.833313e-002, -7.800168e-002, 3.141969e-002, 4.078398e-002, 3.079965e-002, 1.127899e-002, 2.572089e-002, 1.613382e-002, 2.926775e-002, 1.213907e-002, -3.401554e-002, -1.506701e-004, 7.167670e-003, 4.009152e-002, 8.425411e-003, 6.731587e-002, -1.137081e-002, -3.664174e-002, -1.008870e-002, 2.091665e-001, -3.548726e-002, 2.083363e-002, -1.614849e-002, 3.095673e-003, 2.206877e-002, -4.750736e-003, 1.571617e-002, 5.169705e-003, 4.766557e-003, -2.797636e-002, -1.620618e-002, 1.406822e-002, 1.932828e-002, 8.205970e-003, 8.242155e-003, 5.652489e-003, -2.616958e-002, -9.823910e-003, -4.001050e-002, -3.428152e-002, 7.589596e-002, -1.491289e-001, -8.291569e-002, 6.282161e-002, 1.604767e-002, 6.778334e-002, -2.857372e-002, 2.879186e-002, 1.748400e-002, 2.186423e-003, 3.579286e-003, -8.839906e-003, -8.851522e-004, -8.069024e-003, 9.138257e-003, 8.237845e-003, 2.487457e-002, -7.240666e-003, 1.817037e-002, 2.026120e-002, -1.117982e-002, 4.941315e-002, 3.840988e-002, 2.037058e-002, 7.239467e-002, -1.171213e-001, 1.348846e-001, -7.993857e-002, -2.795562e-002, 4.535900e-002, -3.071867e-002, 7.697853e-003, -5.963352e-004, -7.333821e-004, -4.593885e-003, 8.349041e-004, -7.628332e-003, -2.235589e-003, 9.693736e-003, -1.161650e-002, 3.022007e-003, -5.282326e-003, 6.350087e-003, -1.812486e-002, 1.126685e-002, 5.914517e-002, -1.473516e-001, 1.560945e-001, 5.216957e-002, -6.903995e-002, 1.057132e-001, -6.481105e-002, -3.582190e-002, 1.159511e-002, -4.363718e-002, -2.286468e-003, -7.632965e-003, 1.451463e-002, -1.023801e-002, -1.662549e-002, 1.440887e-003, -2.521535e-003, 3.462420e-002, -2.307100e-003, 1.077639e-002, -1.781757e-002, 5.722683e-002, 1.497863e-002, -8.316851e-002, 1.353422e-001, -7.109946e-002, 6.047903e-002, -7.001790e-002, 8.425943e-003, 2.717205e-002, -7.835835e-004, -1.850239e-002, 1.739174e-002, -1.687251e-002, 1.916283e-002, -2.683150e-003, -1.373979e-002, -1.539467e-002, -8.843267e-003, -3.235917e-003, 3.761124e-004, 4.607422e-002, -3.236669e-002, 8.617686e-003, 3.957953e-003, 5.301367e-003, -4.361567e-003, 1.853758e-004, -3.427944e-002, 2.734959e-003, 1.410201e-002, -3.786583e-002, -1.971059e-003, 3.730321e-002, -1.378782e-002, -1.088454e-002, 2.719315e-002, -1.373386e-002, -1.626045e-002, -1.200038e-002, 6.953825e-003, 1.328160e-002, 6.293032e-003, -2.212156e-003, -2.381149e-002, 3.622436e-002, -2.260382e-002, -3.061823e-002, 4.370576e-002, 2.414787e-002, -4.722504e-002, 3.352980e-002, -6.945137e-002, 1.364748e-002, 3.959760e-002, -1.802355e-002, -2.992432e-002, -8.065628e-003, 9.728270e-003, 9.813401e-003, -1.637414e-002, -6.943708e-003, 6.327471e-003, -4.287700e-003, 9.365730e-004, 1.852937e-002, -3.975960e-003, -8.876053e-003, -2.028995e-002, 7.749443e-003, 8.320821e-003, -2.216619e-002, -3.338854e-003, 3.950083e-002, 4.237716e-002, 2.088454e-002, 8.115419e-003, -1.100723e-002, 5.506942e-003, -1.567265e-002, -3.748214e-003, 3.534667e-002, -1.026680e-002, -9.505487e-003, -7.190665e-003, -7.354279e-003, 7.302309e-004, 6.243549e-003, 5.545028e-004, -5.284945e-003, -1.489691e-002, -8.112041e-003, 1.418233e-002, 2.197190e-003, -3.937318e-003, 2.352412e-002, -6.312860e-003, 1.633849e-002, 2.146345e-002, 2.561592e-003, -5.643416e-003, 1.478259e-002, -9.592885e-003, -1.984499e-002, 9.676362e-003, 1.054013e-002, -9.252876e-003, -2.789246e-003, -1.586968e-003, -5.270449e-003, -6.389763e-003, 9.841123e-004, 4.174176e-003, -1.710220e-002, 1.737458e-003, 1.373888e-002, -3.995722e-003, 4.305086e-003, 1.268258e-002, 1.136574e-002, 5.422762e-003, -1.571034e-002, -7.737902e-003, 3.089236e-002, -9.936702e-003, -1.625056e-002, 8.545397e-003, 1.916910e-002, -1.403240e-002, -3.790800e-003, -1.756248e-003, -2.837671e-003, 5.797248e-004, -5.372769e-004, 3.490828e-003, 6.447153e-003, 2.580831e-003, -1.728139e-002, 1.587251e-002, 1.576584e-002, 2.648968e-003, -1.559276e-002,


© ISO/IEC 2004 — All rights reserved

--`,,```,,,,````-`-`,,`,,`,`,,`---

Copyright International Organization for Standardization
Provided by IHS under license with ISO
No reproduction or networking permitted without license from IHS
Not for Resale

4.762589e-002, -9.460078e-003, 3.122996e-017, -6.058018e-003, 1.761953e-002, -3.557268e-002, 3.518668e-002, -2.618362e-002, -1.738577e-007, 1.870748e-002, 3.082844e-003, -2.126684e-002, -1.378721e-002, 2.681865e-002, -2.681865e-002, 1.378721e-002, 2.126684e-002, -3.082844e-003, -1.870748e-002, 1.738577e-007, 2.618362e-002, -3.518668e-002, 3.557268e-002, -1.761953e-002, 6.058018e-003, -1.131747e-001, -5.419139e-002, -1.913354e-002, 4.427044e-002, 3.259978e-003, -3.348091e-002, 7.648276e-003, -1.980494e-002, -1.801993e-002, 1.559947e-002, 1.870013e-002, -3.433074e-003, -5.915387e-003, -1.696113e-002, -1.100130e-002, 6.423853e-003, -5.957004e-003, -2.259424e-002, -2.881406e-002, -4.732523e-003, 5.203455e-002, -8.760538e-002, 1.783966e-002, 1.045210e-001, -5.064973e-002, -6.204782e-002, 1.077431e-002, -1.873578e-002, -2.013606e-002, 1.270800e-002, -2.483372e-002, -1.218995e-002, -1.972969e-002, -1.018245e-002, -8.510713e-003, -2.112175e-002, -1.657904e-002, 3.631594e-003, 8.600493e-003, 6.692216e-003, 5.999127e-002, -4.964941e-002, 3.355086e-002, -3.145028e-002, 6.862426e-002, -8.965315e-002, 1.934934e-001, -1.301045e-001, 2.619667e-002, -4.744085e-002, -5.372831e-003, -3.705137e-002, -7.668914e-003, -3.459150e-003, -5.720434e-003, -6.762932e-003, 1.065304e-003, 1.236361e-002, -2.908814e-002, -4.981398e-002, -1.936508e-002, -1.855046e-002, -1.403427e-003, -3.637753e-002, -4.239449e-002, 4.782918e-002, -1.125096e-001, 1.173368e-001, -1.229202e-001, -5.196196e-003, 7.407514e-002, -5.070518e-002, 3.616566e-002, -2.875087e-002, 4.977728e-002, -3.458827e-002, -7.829830e-003, 1.540272e-002, -1.129564e-002, -2.268141e-002, -2.844418e-002, 2.482001e-002, 1.683531e-003, -2.693228e-002, -8.822211e-003, -1.047616e-002, -6.128386e-002, 5.136421e-002, -9.562744e-003, 5.849543e-002, -3.218271e-002, 6.436160e-002, -2.129014e-001, 9.848783e-002, -3.087675e-002, 3.401590e-002, 3.665461e-002, -7.726058e-002, 1.753687e-002, 9.060022e-003, 1.321395e-002, -2.616412e-002, -3.946437e-002, -8.775900e-003, 1.294874e-002, -3.393976e-003, 9.855141e-003, 7.759857e-003, -5.399914e-003, 8.261910e-002, -8.011523e-002, 8.314942e-003, 1.039952e-003, -1.220470e-001, 4.043461e-002, 1.080258e-001, 2.925171e-003, -1.212025e-002, 5.674824e-003, -2.017591e-002, 7.749995e-002, -1.875502e-002, 2.192892e-002, -3.092356e-002, -3.600381e-002, -4.300304e-003, 1.142799e-002, -2.076702e-002, -1.387304e-002, -1.784058e-002, -4.141538e-003, 2.578200e-002, -3.422399e-002, 6.005312e-002, -3.229579e-002, 1.022131e-002, 7.634970e-002, -1.336256e-001, 8.836799e-002, -5.425437e-002, 5.125870e-002, -2.999926e-002, -3.748990e-002, -1.184716e-002, -1.514171e-002, -3.030769e-002, -1.203301e-003, 7.982756e-003, -4.074173e-003, -1.222956e-003, 8.892094e-003, -2.307604e-002, -1.349083e-002, -1.123224e-008, -3.016561e-002, 6.465707e-003, -1.300070e-002, 3.715862e-004, -8.801545e-003, 6.357006e-002, -5.485135e-002, 1.581538e-002, 6.061240e-002, -7.833701e-002, -6.885628e-003, 3.732997e-003, -3.936584e-002, -2.138956e-003, 8.292876e-005, 1.491412e-002, -1.013393e-002, -1.831818e-002, -7.309910e-003, 2.208667e-003, -6.300380e-004, -3.011135e-002, 8.960736e-004, 3.055828e-002, -1.818855e-002, -1.183803e-002, 4.267053e-002, 1.341395e-002, -7.552060e-002, 2.402987e-002, -6.035856e-002, 3.791510e-002, -9.273777e-003, -9.280476e-003, 4.327232e-004, 2.439885e-003, -1.698608e-002, 6.801225e-003, -5.376562e-003, -1.355752e-002, -5.967399e-003, 1.744430e-004, 3.404394e-003, -2.002289e-003, 2.711105e-003, 2.277541e-003, -6.185114e-003, 1.852641e-002, -2.728922e-003, 8.047523e-003, 6.151989e-003, -2.108978e-002, 2.095399e-002, -3.332248e-002, 1.027867e-002, -1.382721e-002, -2.447274e-002, -1.314612e-002, 1.068095e-002, 2.339284e-003, -1.383619e-002, -1.294209e-002, -1.223259e-003, 1.192608e-003, 1.706328e-002, -1.603408e-003, 9.913624e-003, 1.247449e-002, -3.386892e-003, -1.450679e-002, -1.197336e-002, 3.777440e-003, 1.004723e-002, -1.481699e-002, -1.640388e-002, 1.664689e-002, 5.752945e-002, 1.218414e-003, -6.364294e-002, 2.289168e-002, -1.295726e-002, 1.067183e-002, -1.054836e-002, -2.063499e-003, -1.283996e-002, -1.182561e-002, 1.732807e-003, 2.081128e-003, 2.650167e-003, 1.059949e-002, -1.700744e-004, 1.836878e-003, -2.267492e-003, -3.257733e-002, -1.128083e-003, 2.988695e-003, 3.730167e-002, -5.640440e-002, -7.982764e-003, -2.121310e-002, 5.097855e-003, 9.087933e-003, -2.045448e-002, -1.484383e-002, 1.674186e-003, 8.594572e-003, -1.447609e-002, -9.540093e-003, -2.472962e-003, 1.086871e-003, -1.411360e-003, -1.198433e-004, -7.454232e-003, 4.453634e-003, 1.074100e-003, -2.384383e-002, -3.086590e-003, 3.988187e-003, -2.132329e-002, -9.713095e-003, 1.014703e-002, 1.147817e-002, 2.502615e-002, -1.429474e-002, 7.874185e-003, -4.467659e-002, 8.031620e-004, 3.148792e-002, -1.449661e-002, -8.700660e-003, -1.165093e-004, -4.186004e-003, -6.641538e-003, 8.510436e-004, -1.637545e-004, -2.979902e-003, -3.218859e-003, -2.326202e-003, -1.429458e-003, -2.421023e-002, 1.285758e-002, 2.039511e-002, -2.441336e-002, 3.470247e-003, -2.764208e-003},

{2.535841e-002, -5.341557e-003, 5.303889e-002, -7.391457e-002, 6.423550e-002, -1.427393e-002, -4.621362e-002, 4.783438e-002, -3.269131e-003, 3.500157e-003, -1.518018e-002, 6.032845e-003, 6.032845e-003, -1.518018e-002, 3.500157e-003, -3.269131e-003, 4.783438e-002, -4.621362e-002, -1.427393e-002, 6.423550e-002, -7.391457e-002, 5.303889e-002, -5.341557e-003, -5.778015e-002, 6.378225e-002, -6.028083e-002, 1.190281e-001, -1.072322e-001, 2.417226e-002, 3.988986e-002, -6.062778e-002, -1.471475e-002, -4.575131e-003, -8.460649e-003, 2.500619e-003, -2.778156e-003, 4.677896e-003, 1.840706e-002, 4.847277e-002, 3.696355e-003, 1.778399e-002, -5.296214e-002, 1.020277e-001, -1.574576e-001, 1.441384e-001, -3.347082e-002, 1.024585e-001, -4.579719e-002, -8.379172e-002, 1.268445e-001, -5.899491e-002, 1.905363e-002, 5.032999e-003, -7.281084e-003, 2.265981e-003, -1.750164e-002,

© ISO/IEC 2004 — All rights reserved


Copyright International Organization for Standardization
Provided by IHS under license with ISO
No reproduction or networking permitted without license from IHS
Not for Resale

3.465572e-003, -1.864337e-002, 4.374822e-002, 1.955680e-002, -4.782133e-003, -3.507288e-002, 4.294856e-002, 2.431432e-002, -5.337774e-002, 1.527261e-002, -5.899422e-002, 1.219207e-001, -1.060581e-001, 9.175355e-002, 1.696297e-002, -6.649085e-002, 2.669914e-002, -3.309160e-002, 2.012033e-002, -5.553573e-004, 1.174268e-003, -9.627043e-003, 7.565027e-003, -1.328874e-002, 3.221698e-003, -2.407725e-002, -1.137289e-002, -2.776389e-002, -3.434946e-003, -9.929524e-003, 3.130265e-002, -1.503458e-002, -2.951227e-002, 1.442639e-001, -1.731143e-001, 1.587401e-002, -1.282073e-001, 7.296189e-002, -1.152106e-002, -3.463573e-002, -4.744007e-003, 4.437854e-002, 6.767290e-003, 1.369232e-002, 4.173542e-002, 2.333934e-002, 1.169678e-002, -2.133605e-002, -1.212364e-002, -3.756815e-002, 9.712282e-003, 2.006425e-002, -1.161365e-002, 1.351944e-002, 2.289243e-002, -9.764947e-002, 4.883169e-002, 6.538560e-003, 1.245933e-001, 8.743184e-002, -4.984719e-002, 6.437558e-002, -2.263922e-002, 2.959869e-002, -2.771250e-002, -2.913628e-002, 2.859046e-002, 4.149135e-003, -1.402278e-003, -1.178301e-002, 9.979759e-003, -6.907342e-003, -1.778779e-002, -3.561644e-002, 2.641267e-002, 2.997121e-002, -4.849006e-002, -3.307834e-002, 4.311978e-002, -6.664749e-002, 7.087255e-002, -1.279817e-001, -3.976216e-002, 6.643787e-002, -6.558293e-002, 4.274532e-002, -1.712003e-002, -4.650212e-002, 1.069760e-002, -1.693808e-002, -1.944514e-002, 3.199348e-003, 8.012165e-003, 1.079608e-002, 9.399036e-003, 2.614855e-004, -2.443436e-002, -2.238638e-002, 3.149432e-002, 3.252467e-002, -4.270101e-003, -1.614634e-003, 4.661336e-002, -9.563373e-002, 7.339391e-002, 1.767036e-002, -7.297667e-002, 9.068177e-002, -6.765091e-002, -2.467872e-002, -8.010464e-003, -2.408791e-002, -1.208461e-002, -2.080378e-003, 1.338352e-002, 3.739665e-003, -6.677254e-003, 5.277959e-003, 2.634543e-002, -5.807207e-003, -1.888302e-002, -2.076624e-002, -1.191315e-002, -2.720225e-002, -2.500366e-002, -4.758325e-003, 3.432013e-002, 1.324742e-002, -8.591591e-003, -1.075089e-002, -3.449965e-002, 2.004304e-002, -2.187927e-002, -4.182241e-003, 3.605957e-003, -3.529896e-002, 6.823066e-003, -6.647495e-004, -7.432809e-003, -6.331734e-003, -2.049611e-002, 3.812051e-003, 1.791274e-002, -3.230921e-003, 5.710910e-003, 3.304141e-002, -1.940321e-002, 2.099953e-003, 2.882580e-002, -1.658342e-002, -1.703999e-002, -2.178033e-002, 7.554037e-003, 3.292734e-003, -2.055630e-002, 2.757218e-002, -6.268951e-003, -2.162378e-002, -4.739757e-003, 1.228084e-003, 7.262831e-003, -5.523083e-003, -7.999520e-003, -3.421183e-004, -1.151939e-002, -1.441708e-002, -9.234277e-004, 1.016023e-002, 6.019981e-003, 1.215690e-002, -1.015009e-002, 2.661160e-003, 8.168302e-003, 6.623317e-003, -2.506148e-003, -4.256284e-002, 4.200192e-002, -6.120307e-003, -3.143803e-002, 2.956411e-002, -6.211378e-003, -3.009508e-003, 5.699954e-003, -7.311805e-003, -4.401119e-003, 7.846213e-003, 2.079595e-003, -1.141180e-002, -1.554829e-002, -1.054408e-002, -7.641147e-004, 1.275592e-002, 1.902327e-002, -2.223691e-002, 1.036599e-002, 3.665258e-002, -2.294727e-002, -1.452215e-002, -2.920333e-003, -3.745237e-002, -1.229946e-003, -1.715170e-003, 2.206029e-002, 6.079777e-003, -5.808944e-003, -8.198074e-003, -5.414092e-003, -3.392356e-003, 4.139936e-003, 2.240543e-003, -3.270222e-003, -5.466042e-003, -3.687533e-003, -4.544093e-003, 4.650764e-004, -1.183511e-002, 1.368395e-002, 2.004777e-002, -9.492861e-003, 6.253194e-003, -4.908691e-002, 2.470713e-002, 7.835980e-003, -3.247487e-002, 1.382447e-002, -1.616172e-002, 3.162747e-003, 8.354878e-003, -1.025247e-002, -1.102591e-002, -2.261353e-003, 1.899466e-003, 4.267098e-003, 3.209908e-003, -4.584861e-003, -3.096336e-003, 4.559210e-004, 6.747555e-003, -4.356044e-003, 1.156580e-002, -1.417840e-002, 5.672466e-003, 1.870504e-002, 1.037086e-002, -3.579314e-002, 3.235915e-002, -1.852391e-002, -2.742541e-002, 3.328504e-002, 8.584666e-003, -2.367690e-003, -2.546780e-003, -5.275364e-003, -3.204752e-003, -1.787821e-003, -3.040646e-003, 3.100377e-003, -2.873239e-004, -5.391662e-003, -8.805749e-003, -9.160454e-004, 2.288366e-002, -1.340314e-002, 1.777122e-002, 8.731812e-003, -2.557429e-002, 4.101809e-018, 1.127684e-002, -3.897322e-002, 6.222498e-002, -4.362947e-002, 3.086839e-003, 3.438972e-002, -1.331892e-002, 6.943910e-003, 2.252756e-002, 1.089821e-002, -2.449718e-003, 2.449718e-003, -1.089821e-002, -2.252756e-002, -6.943910e-003, 1.331892e-002, -3.438972e-002, -3.086839e-003, 4.362947e-002, -6.222498e-002, 3.897322e-002, -1.127684e-002, -2.078773e-001, 1.763820e-001, -1.251254e-001, 5.091562e-002, 2.200023e-002, -3.404996e-002, 4.217912e-002, -3.674117e-002, 1.081089e-002, -7.705966e-003, -7.355593e-003, -3.070983e-004, -3.201787e-002, -1.460451e-002, 6.578154e-003, 1.671928e-003, -3.527799e-002, 8.442806e-002, -6.471055e-002, 4.783539e-002, -1.725181e-002, 2.982796e-002, 7.598307e-002, 2.242611e-001, -1.643382e-001, 4.729000e-002, 4.652218e-002, -1.191800e-001, 9.134983e-002, -6.756322e-002, 2.704558e-002, -1.959221e-002, -1.589045e-002, -2.382957e-002, 6.205547e-003, 3.260781e-003, 5.118042e-003, 9.946648e-003, -9.284757e-003, 5.224999e-002, -6.080901e-002, 5.934891e-002, -6.785404e-002, 1.441989e-001, -1.265595e-001, -3.542144e-002, -8.875446e-002, 1.018703e-002, 5.599416e-002, -9.838678e-002, 3.022914e-002, -1.020531e-002, 2.647358e-002, -4.859524e-002, 1.593735e-003, -1.566741e-002, 1.544542e-003, 7.869336e-003, 1.137253e-002, 2.790208e-002, 2.157966e-002, -1.479797e-003, -7.957806e-002, 3.370333e-002, 4.347493e-002, -1.042911e-001, 3.562771e-002, 1.227711e-002, -8.117346e-003, 4.091905e-002, -3.405807e-002, 7.805200e-003, 3.473085e-003, 6.998769e-002, -2.425329e-002, 3.373992e-002, 7.386253e-002, 1.780044e-002, 2.150076e-002, 1.418711e-002, -6.900855e-003, 3.300905e-003, -3.804026e-002, -1.894672e-002, -2.629413e-003, 7.246265e-003, -8.576834e-003, -3.946757e-002, 3.582335e-002, 1.229291e-003, 1.249078e-002, -1.739535e-002, -1.601126e-002, 3.358403e-003, -2.932146e-002,


© ISO/IEC 2004 — All rights reserved

Copyright International Organization for Standardization
Provided by IHS under license with ISO
No reproduction or networking permitted without license from IHS
Not for Resale

4.216001e-002, -2.611923e-002, -2.256967e-002, 3.042642e-002, -4.025972e-002, -1.085783e-002, -1.142493e-002, -1.317594e-002, 5.893603e-003, 2.547988e-002, 9.509420e-003, -1.872680e-002, 7.913928e-003, 6.118964e-003, -3.928139e-002, 3.344461e-002, -2.218557e-002, 4.164545e-002, -1.026806e-001, 4.443924e-002, 4.759145e-002, -2.638627e-002, -2.754767e-002, 5.348389e-002, -6.304628e-002, -1.679544e-003, 1.571181e-002, -1.585894e-002, 1.965189e-002, 1.446609e-002, 1.172959e-002, -1.214911e-002, 7.535360e-003, 1.457071e-002, 1.307177e-002, 4.935265e-003, -1.348263e-002, 3.993065e-002, -3.175753e-003, 5.704350e-003, 3.513663e-002, -1.944720e-002, -3.885035e-002, -3.916971e-002, 5.279960e-002, 6.945409e-002, -6.273427e-002, 2.706459e-002, 1.092544e-003, -3.598817e-002, 2.837610e-002, 4.198091e-002, 1.531202e-002, -6.097220e-003, 6.794327e-003, -8.312454e-003, 8.183666e-003, -3.491113e-003, -2.248282e-003, 3.931317e-003, -5.148520e-002, 4.919880e-002, 4.436267e-002, -5.235654e-002, 2.943681e-002, 2.646308e-003, 5.553512e-002, 8.869487e-003, -7.888864e-002, 3.488485e-002, -1.065771e-002, -2.862630e-002, 1.218361e-002, 1.494108e-002, 1.697030e-002, 4.394924e-003, 3.177782e-003, 4.622900e-003, -2.234413e-003, -2.205146e-002, -1.623204e-003, 7.286086e-003, -1.436080e-002, 5.031002e-003, -2.653553e-002, -3.389608e-004, 4.178725e-002, -4.948429e-002, -1.325143e-002, -1.246106e-002, -3.109208e-003, 3.337949e-002, -1.509925e-002, -7.735664e-003, -1.136729e-002, -4.992093e-003, 1.541654e-002, 4.118516e-003, -1.029961e-002, 5.596206e-003, 7.286869e-003, 1.453469e-003, 1.403163e-002, -7.665514e-003, -1.808841e-002, 1.323104e-002, -1.331157e-002, -1.356285e-002, 2.925461e-002, -3.535464e-002, 4.618042e-002, -1.215397e-002, 8.554192e-002, -4.749284e-002, -4.166218e-003, 2.747327e-002, -1.332731e-002, -6.981489e-003, -3.223372e-003, -5.882983e-003, 4.047823e-003, 5.809491e-003, 7.490787e-004, 2.249715e-003, 1.251935e-002, -2.005005e-003, -9.868163e-003, -9.263434e-003, -1.225271e-002, 8.804161e-003, -4.882509e-003, -2.353964e-002, 6.296507e-002, -2.514056e-002, -4.409978e-002, -2.612549e-002, 2.512175e-002, -1.493286e-002, -1.858715e-003, 2.982984e-002, 2.392864e-004, -1.710291e-002, 3.287103e-003, -8.807378e-003, 5.627471e-003, 1.417562e-002, -2.793972e-004, 8.876727e-004, 1.426744e-002, 2.282439e-003, -1.221202e-002, 7.243269e-003, 3.635667e-004, -2.474767e-002, 2.087688e-002, 4.588297e-003, -7.532029e-003, 2.597008e-002, 2.976528e-002, -3.667334e-002, 1.981937e-002, 5.651234e-005, -1.413598e-002, 1.539477e-002, -6.165590e-003, -1.187287e-002, 6.811009e-004, 1.460155e-003, 5.783240e-003, 2.091308e-003, -4.334919e-003, -7.149740e-004, -1.891095e-003, 2.545561e-003, -5.042546e-003, -2.243135e-003, 4.393107e-003, -1.779529e-002, 1.751907e-002, 1.871056e-002, -2.723091e-002, 5.248439e-003, -7.505862e-004, -2.322868e-002, 5.241294e-003, 9.684982e-003, 9.011184e-003, -5.143053e-003, -1.196124e-002, -4.260541e-003, 4.086215e-003, 1.045880e-003, -2.595211e-003, 5.135710e-003, -3.320868e-003, 8.217914e-003, 8.747172e-004, -3.580873e-003, -2.910121e-003, -7.568700e-003, 2.995555e-003, 3.596445e-002, -2.733514e-002, 2.047990e-002},

{-1.516418e-002, 5.273985e-003, -7.438108e-003, 9.582540e-003, -2.674287e-002, 4.423723e-002, -5.296990e-002, -7.941908e-003, 2.479880e-002, -2.159417e-002, -8.907387e-003, 2.002078e-003, 2.002078e-003, -8.907387e-003, -2.159417e-002, 2.479880e-002, -7.941908e-003, -5.296990e-002, 4.423723e-002, -2.674287e-002, 9.582540e-003, -7.438108e-003, 5.273985e-003, 4.540288e-002, 7.682803e-002, -1.189521e-001, 9.977655e-002, -2.372775e-002, -1.347479e-002, 3.445856e-002, -1.419181e-002, -2.656258e-002, -1.945161e-003, -1.142508e-002, -3.614296e-002, 2.193279e-002, 5.786822e-003, 9.557930e-003, -1.600088e-002, 3.487560e-002, -4.493841e-002, -5.489188e-002, 1.617292e-001, -2.003699e-001, 2.069713e-001, -9.684180e-002, -7.834069e-002, 6.799234e-002, -5.147733e-002, 6.183657e-002, 1.194797e-002, 1.564488e-002, 1.786107e-002, -7.312824e-003, 1.525090e-002, 4.513183e-002, 7.905710e-003, 2.000817e-002, -1.515603e-002, 1.657118e-002, 1.137823e-003, -1.443930e-002, -4.118514e-002, 6.051025e-002, -5.897524e-002, 1.088678e-001, -5.789257e-002, 4.293610e-002, 5.869989e-002, -1.260201e-001, 2.019145e-002, 7.586820e-002, -8.103654e-002, 1.147937e-002, 2.625224e-002, -3.678211e-002, 1.086794e-002, -3.096201e-003, -4.116910e-002, 2.495424e-002, 1.521953e-002, -2.429153e-002, -3.776588e-002, -2.067033e-002, -4.987689e-002, 1.487192e-002, -2.577132e-002, 2.434525e-002, -2.587958e-002, 1.261411e-001, -1.093196e-001, 4.732691e-002, 1.670464e-001, -1.824104e-001, 1.329399e-001, -1.104744e-001, 4.638677e-002, -3.906920e-002, 5.539880e-003, 1.717139e-002, -1.166134e-002, 1.706958e-002, 3.374498e-002, 3.515332e-002, -1.796045e-002, -3.767848e-002, -2.635814e-002, 1.962198e-002, -1.632036e-002, 2.942238e-002, 2.156692e-002, -2.565106e-002, -1.901142e-003, 5.107606e-002, -1.041491e-001, -6.102262e-002, 1.433319e-001, -2.888319e-002, 5.916558e-002, 2.105724e-002, 1.198987e-002, -1.278361e-003, 2.026615e-002, -6.882906e-003, 3.193925e-003, 1.121866e-002, -2.220650e-002, 1.136837e-002, 6.648157e-003, 8.747673e-003, 7.172219e-003, -1.915880e-003, -4.003907e-002, 2.281890e-002, -5.712138e-002, 2.467172e-002, -1.054207e-001, 2.440422e-002, 5.539335e-002, -7.254253e-002, -7.829799e-003, 2.286957e-002, -2.417542e-002, -4.573866e-002, 3.506525e-002, -2.074081e-002, -4.103903e-002, 3.418080e-003, 3.221527e-003, 5.938035e-003, -1.187178e-002, -1.156612e-002, -1.078200e-002, 9.214326e-003, 1.882478e-002, 3.206117e-002, 3.125646e-002, 1.056057e-002, 2.331812e-002, -1.169424e-002, 3.313706e-002, -7.431243e-002, 2.753691e-002, 8.596524e-002, -8.516705e-002, 3.071677e-002, 4.687694e-002, 1.267588e-002, -1.144301e-002, 1.550493e-003, 1.640246e-002, -5.004875e-003, -1.015446e-002, 2.025840e-002, 1.904502e-002, -3.101874e-002,

© ISO/IEC 2004 — All rights reserved


Copyright International Organization for Standardization
Provided by IHS under license with ISO
No reproduction or networking permitted without license from IHS
Not for Resale

1.138375e-003, 3.347253e-003, -2.240319e-002, 3.627354e-002, 3.261824e-002, -3.252354e-002, 2.960263e-002, 4.361290e-002, 4.523792e-002, 3.698774e-002, -3.607807e-002, 3.504375e-002, 9.897886e-004, 6.265174e-003, -3.296850e-003, -1.070825e-002, 1.257156e-002, -4.033580e-003, -1.627742e-002, -8.420128e-003, 2.212736e-003, -3.087575e-003, -4.121001e-003, -1.703170e-002, 3.397996e-003, -3.624471e-003, -1.790181e-002, 3.276653e-002, 4.076815e-002, 1.228543e-002, 4.100897e-003, -3.318059e-002, -5.919035e-003, 9.568323e-003, -1.347217e-002, -5.509853e-003, -1.037657e-002, 2.881237e-003, 1.495392e-002, 7.944871e-003, 1.291786e-003, -6.812981e-003, -2.472896e-004, -5.449330e-003, -1.829303e-004, -6.603264e-004, -1.807093e-003, -5.771356e-003, -2.442146e-003, 6.364652e-003, 1.418448e-002, -8.531139e-003, 3.937977e-002, 5.002252e-003, 6.555946e-002, -2.632102e-002, -3.624665e-002, 1.694424e-002, -5.128403e-003, -6.817393e-003, 4.860092e-003, 1.352714e-003, 8.952703e-003, 2.665925e-003, 6.278188e-003, 6.662801e-003, -4.591246e-003, -3.705482e-003, -7.810796e-003, 6.783406e-003, -8.307955e-003, -6.378283e-003, 1.897132e-002, 2.738258e-003, 4.497139e-002, -1.958424e-002, -5.438865e-002, -3.738068e-002, 3.281869e-002, -1.897760e-002, -4.068849e-002, 1.487001e-002, -2.092211e-002, -1.091254e-002, 6.636916e-003, 3.302875e-004, 5.888511e-003, 1.520698e-002, -3.557498e-003, -2.284525e-003, -5.826523e-003, 1.013617e-004, -1.004783e-002, 1.107071e-002, -1.332793e-002, -1.268619e-002, 4.952226e-002, -1.852883e-002, -5.190288e-003, 6.021899e-002, 3.995917e-002, -8.857723e-003, -1.266016e-002, 1.040618e-002, -3.217002e-002, -1.326406e-002, 1.071652e-002, -1.675580e-002, 1.627649e-003, 1.543598e-002, 4.679320e-003, 4.538661e-003, -1.184254e-003, 1.731658e-003, -7.885996e-003, 7.668012e-004, -9.315333e-003, 3.492570e-003, 8.832782e-003, -7.283659e-004, 1.915473e-002, 1.515394e-002, -4.344526e-002, 1.124718e-002, -9.685406e-004, -1.722542e-002, 3.600304e-003, -1.312269e-002, -7.487329e-003, -1.196741e-002, 4.493333e-003, 6.071468e-003, 9.892537e-003, 6.391403e-003, -5.987401e-003, -5.784782e-004, 1.629497e-003, -3.101019e-003, -9.726183e-003, -2.103267e-003, -6.427317e-003, 7.441136e-003, 1.347482e-002, 2.570037e-002, -2.503312e-002, 1.883830e-002, -2.746462e-017, 1.529460e-002, -4.920357e-002, 5.586087e-002, -4.396912e-002, -1.022703e-002, 2.295130e-002, 2.596574e-003, 6.031569e-003, 1.917886e-002, -3.159827e-003, 1.230065e-003, -1.230065e-003, 3.159827e-003, -1.917886e-002, -6.031569e-003, -2.596574e-003, -2.295130e-002, 1.022703e-002, 4.396912e-002, -5.586087e-002, 4.920357e-002, -1.529460e-002, 1.085634e-001, -1.198128e-002, -6.644655e-002, -1.598165e-002, 4.299594e-003, -3.937753e-003, -3.984886e-002, -3.771071e-003, -1.686731e-003, -9.260831e-003, 4.052498e-003, 1.606327e-002, 2.490351e-003, -7.113618e-003, -1.466177e-002, -3.866559e-002, 2.006268e-002, -1.839330e-003, -3.725996e-002, 5.124680e-002, -5.688739e-002, 1.257882e-001, -1.985540e-001, -1.492830e-001, -8.011781e-002, 1.779682e-001, -6.842326e-003, -7.828579e-002, 3.907792e-002, 3.127887e-002, 1.649941e-004, 1.005698e-002, 7.698696e-004, -3.183690e-002, -3.031830e-002, -1.903100e-002, 2.551281e-002, -9.063475e-004, 1.361556e-002, -2.360178e-002, 2.804745e-002, 3.987580e-002, -8.563280e-002, 1.123836e-001, -1.114705e-001, 1.765925e-001, 9.099944e-002, -3.257753e-002, 8.222118e-003, -8.209596e-002, 9.363417e-002, -2.988103e-002, -2.930103e-003, 3.202089e-003, -7.751712e-003, 3.230152e-002, 2.322752e-002, 1.493888e-002, -6.811579e-004, -1.708954e-002, 3.241733e-002, -3.487668e-003, 2.506252e-002, 5.427181e-002, -3.036663e-002, -2.244097e-002, 8.073213e-002, -6.709748e-002, -2.486124e-002, 1.587629e-002, 2.563869e-002, -5.569346e-002, 2.721675e-002, 1.172596e-003, -2.346466e-002, 3.117289e-003, 2.613603e-002, 4.436473e-002, -8.649465e-003, 2.079517e-002, 5.255898e-004, -2.195025e-002, -8.609679e-003, -8.533927e-003, 1.430552e-002, -2.970709e-002, -1.810823e-002, -2.145030e-002, 1.954535e-002, -6.482442e-002, -4.477784e-002, -7.360333e-002, -8.457522e-002, 1.035774e-001, -2.306004e-002, 3.418658e-002, -5.309697e-002, 3.750886e-002, -6.818903e-005, -2.555983e-003, -1.116785e-002, 2.760113e-002, 9.598258e-003, 2.204429e-003, 1.403071e-002, -1.201351e-002, -2.483540e-002, -1.551640e-002, 1.097264e-002, -1.433192e-002, 2.401004e-002, -9.239961e-003, -4.660967e-002, 3.260967e-002, 1.145026e-001, 6.362778e-002, -1.035365e-001, 5.095380e-002, 1.225447e-002, -8.231350e-003, -1.524645e-002, -1.317088e-002, -2.613810e-002, 3.850296e-002, 7.898922e-004, -1.136135e-002, -2.731400e-002, -3.292518e-003, -5.506577e-003, 3.514259e-003, 3.502213e-003, -1.586527e-002, 8.065875e-003, -1.233154e-002, 1.418406e-002, 1.329447e-002, -1.699472e-003, -2.338787e-002, -7.678436e-002, 7.278999e-002, -1.829719e-002, -1.895048e-002, 1.003360e-002, 8.853141e-004, -4.637395e-002, 3.341863e-002, -1.569134e-002, -1.332841e-002, -2.652843e-002, -9.468529e-003, -7.880959e-004, 6.139187e-003, -1.621051e-002, -2.057228e-002, 2.935142e-002, 1.267987e-002, -7.832200e-003, 1.164469e-003, 2.350947e-002, -2.209972e-002, -3.176383e-002, 9.917701e-003, -9.894249e-003, 2.964918e-002, -1.833950e-002, -4.490735e-003, -2.402624e-003, 6.459622e-003, -4.621984e-003, -1.451605e-002, -3.495679e-002, 8.742594e-003, 4.890304e-003, 1.062610e-002, 8.879365e-003, -1.078340e-002, -2.150996e-003, -1.402135e-002, -1.980383e-002, 4.311065e-002, -2.630781e-002, -5.342071e-002, 8.812900e-002, 3.864283e-003, -1.881376e-002, 3.931419e-002, 1.467517e-003, 4.699488e-003, 1.493831e-002, -2.045686e-002, 4.225637e-002, -1.116567e-002, -3.706234e-002, 3.719176e-003, 3.815329e-003, 4.999292e-003, 7.078898e-003, -1.692488e-003, 9.647688e-003, -2.147477e-002, -2.384944e-003, -2.046780e-003, -5.169354e-002, 2.484006e-002, 8.414435e-003, 1.551375e-002, -4.276417e-003, -3.738862e-002, 1.285991e-002, -1.223824e-002, 8.466145e-003, -6.877986e-003, 3.282457e-002, -1.052274e-002, 9.574534e-003,


© ISO/IEC 2004 — All rights reserved

Copyright International Organization for Standardization
Provided by IHS under license with ISO
No reproduction or networking permitted without license from IHS
Not for Resale

1.044854e-002, 6.844812e-003, 3.777885e-003, -1.000317e-002, 3.023488e-003, 5.009454e-003, -1.582131e-002, -4.599508e-003, 3.829467e-003, -2.692453e-002, 7.492104e-003, 3.688701e-003, 1.395432e-003, 2.962498e-002, 3.489167e-002, -1.589518e-002, 5.696049e-003, -7.504863e-004, -7.016693e-004, 1.327721e-002, -5.983153e-003, 2.916827e-002, -4.371206e-003, 1.116454e-002, 9.555795e-003, -1.501001e-003, -6.503776e-003, 6.748516e-003, 6.204732e-005, 7.729118e-005, -2.817271e-003, -2.880941e-003, 8.661964e-003, -8.383851e-003, -5.460363e-003, -5.541335e-003, 2.347455e-002, -2.493437e-003, 2.347728e-003, -6.006344e-003, -3.601545e-003, -1.320313e-002, -6.894268e-003, 1.108893e-002, -5.469050e-003, 1.277224e-002, 1.217575e-002, 8.918085e-003, -3.955651e-003, -8.127258e-003, -6.391408e-003, 6.205474e-003, 1.787241e-003, -6.457451e-003, -4.592304e-003, -9.084026e-004, -1.540909e-002, 9.685375e-003, 5.812748e-003, -3.663762e-003, 2.413151e-002, 1.079263e-002, -1.113559e-002, -2.161420e-003, -2.403503e-002, 4.833162e-003, -1.394882e-002, 7.232954e-003, 7.839200e-003, 7.705311e-003, 1.561555e-003, -4.096687e-004, 4.727862e-003, 2.467408e-003, 5.272628e-003, 2.216236e-003, -1.033964e-002, 8.315101e-004, -5.322060e-003, -2.050434e-002, 2.820676e-002, -4.098773e-003, 1.582768e-002, 1.390663e-002},
{6.226343e-003, 2.557132e-002, -7.278421e-002, 5.590386e-002, -2.596220e-002, -1.869118e-002, -1.854998e-003, -2.894721e-002, 3.737640e-002, -3.971139e-002, -2.176197e-002, 1.395604e-002, 1.395604e-002, -2.176197e-002, -3.971139e-002, 3.737640e-002, -2.894721e-002, -1.854998e-003, -1.869118e-002, -2.596220e-002, 5.590386e-002, -7.278421e-002, 2.557132e-002, -5.699840e-002, 5.400532e-002, 4.343446e-002, -6.549073e-002, -3.076246e-003, 6.125606e-002, -6.314006e-002, 2.379604e-003, -2.009510e-002, 5.949490e-002, -4.526368e-003, -1.890038e-002, -6.293931e-003, -1.253977e-003, 1.475619e-002, -8.882598e-003, -1.809623e-002, -7.573726e-002, 3.702974e-002, 2.720437e-003, -6.223588e-002, 7.323048e-003, 6.729872e-002, 4.647572e-002, -1.058286e-001, 1.394906e-002, 9.947691e-002, -7.608387e-002, -4.438980e-002, 4.870788e-002, -2.781127e-002, -6.460536e-003, -6.918455e-002, -1.588832e-002, -7.637173e-003, 7.343939e-003, -5.654729e-003, -1.046473e-003, 1.481013e-002, -2.350825e-002, 4.363321e-002, -2.551254e-002, -9.318265e-002, 8.037766e-002, 4.402542e-002, -1.283552e-001, -2.314119e-002, -8.630968e-002, 1.036634e-001, -1.007205e-001, 7.315989e-002, -2.857640e-002, -4.999894e-002, -2.175530e-003, -1.404096e-002, 2.970124e-002, -2.362655e-002, -1.547262e-002, -4.598305e-002, -4.837256e-002, -1.439699e-002, -1.308610e-003, 2.936468e-002, -5.644517e-002, -4.726269e-002, 1.713336e-001, -1.289738e-001, 9.207185e-002, 7.594103e-003, -1.184674e-001, 9.973045e-003, -1.027955e-001, 6.292007e-002, -7.531806e-003, -1.991238e-002, 2.100767e-002, -5.115713e-003, 1.292012e-002, -1.409533e-002, 3.015874e-002, 1.298750e-002, 2.983417e-002, 1.397072e-002, 7.855062e-003, -2.607081e-003, -8.564398e-004, 4.392917e-002, -4.228433e-002, 1.733966e-002, 5.576299e-002, -5.021067e-002, 2.239154e-002, 1.369122e-001, -1.050591e-001, -1.120389e-001, 9.290910e-002, -9.424970e-002, 7.644333e-002, 1.246079e-002, 8.485182e-004, 5.077844e-005, -1.816718e-003, 1.638265e-002, 2.200830e-002, -1.166491e-002, -1.069601e-003, -1.957261e-002, -7.626379e-003, 7.579163e-003, -2.895171e-002, 7.236298e-002, -7.292550e-002, 6.171359e-002, -4.412667e-002, -9.142107e-002, -3.644952e-002, 5.734056e-002, 8.466180e-002, -4.244369e-002, 5.276023e-002, -2.668935e-002, 1.381203e-002, 9.644420e-003, 2.296504e-004, 2.314851e-002, 2.550827e-002, 1.131843e-002, 6.578453e-003, -1.480134e-002, 1.788257e-002, 7.199391e-003, -1.467352e-002, 4.589893e-002, -6.471828e-002, 4.248279e-002, -6.030487e-002, 7.001548e-002, 3.045061e-002, 3.159896e-002, -1.164379e-002, -5.149535e-002, 5.705660e-002, -1.714854e-002, 4.073701e-002, 4.165050e-003, 4.713169e-002, 4.387349e-002, 1.092879e-003, -1.054218e-002, -1.984027e-002, -1.379690e-002, -2.527336e-002, -2.764371e-002, 6.295129e-003, 4.522449e-002, -5.208540e-002, 1.154001e-002, -3.304901e-003, -1.000408e-002, -1.982502e-002, -2.034490e-002, 2.965634e-002, -1.248832e-002, -2.761749e-002, 3.126128e-002, 6.253265e-003, -3.959642e-002, 4.058977e-002, -2.219661e-003, -3.418952e-002, -3.321270e-003, 1.977540e-003, 2.646855e-002, 3.035717e-002, -1.778697e-002, -2.865501e-002, -2.376686e-003, -9.809925e-003, 2.852181e-002, -3.347304e-002, -3.528124e-003, 6.005618e-002, -5.560154e-003, -2.839221e-002, -5.506854e-002, 2.308725e-002, 4.061862e-002, -4.440832e-002, -3.311302e-002, 5.652466e-002, -1.390847e-002, -7.957569e-003, -1.165833e-002, -2.578714e-003, 3.291115e-002, 3.298488e-003, 3.947689e-003, 1.468572e-003, 9.842722e-003, 8.116587e-003, -4.208967e-003, -4.569467e-003, 8.601542e-003, 1.618978e-002, -2.926860e-002, -7.488259e-004, -1.074417e-002, 3.111772e-002, 3.719405e-002, -5.928276e-002, 4.282018e-002, -1.953474e-002, -5.277765e-003, 9.301496e-003, -2.250859e-002, 1.085612e-003, 1.642951e-002, 2.628863e-003, 1.322380e-002, 4.592975e-003, 1.383128e-002, 6.400129e-004, 1.296238e-002, 2.182432e-002, -4.477396e-002, -1.260932e-002, -3.882100e-003, 2.439142e-002, -6.370781e-002, 6.890662e-003, -3.000096e-002, 2.330223e-002, 4.924430e-002, -5.976671e-002, 2.382426e-002, -8.446036e-004, -1.029068e-002, 2.746250e-003, -8.630348e-003, 8.291194e-003, 7.922668e-003, -8.098200e-003, -9.671145e-004, 1.276050e-002, 2.095941e-002, 4.766768e-003, -7.683158e-003, -2.096736e-003, 8.138574e-003, 2.604803e-002, -4.545850e-002, 2.981627e-002, -1.627864e-002, 2.184591e-002, 1.694453e-002, -3.709260e-002, 2.486712e-002, -2.257550e-002, 1.696796e-002, -1.015429e-002, -1.126268e-002, 1.097736e-002, 3.494955e-004, 7.257089e-003, 1.903733e-003, 3.651533e-003, 9.218426e-003, 3.921570e-003, 1.636118e-003, -3.758550e-003, -6.077146e-003, -1.618679e-002, -7.858655e-003,



Copyright International Organization for Standardization
Provided by IHS under license with ISO
No reproduction or networking permitted without license from IHS Not for Resale

2.558075e-002, -4.505809e-002, 4.660356e-003, 1.255026e-002, 2.830303e-003, 2.221218e-004, -1.447371e-002, 1.821268e-002, -1.212723e-002, -3.092251e-003, 3.248618e-003, 4.545032e-003, 6.621214e-003, -1.572514e-003, -2.262416e-003, -6.000588e-003, 2.445948e-003, 5.964222e-003, -7.927996e-003, 1.063219e-003, -1.326841e-002, -4.710176e-003, 1.879733e-002, -2.854145e-002, 1.328882e-002, 2.959848e-003, -8.372029e-018, -3.141999e-003, 4.609222e-003, -5.497670e-003, -2.032684e-003, -9.313331e-003, 1.405176e-002, -1.988087e-002, -4.063526e-004, 4.223935e-003, -1.739656e-002, 1.249343e-002, -1.249343e-002, 1.739656e-002, -4.223935e-003, 4.063526e-004, 1.988087e-002, -1.405176e-002, 9.313331e-003, 2.032684e-003, 5.497670e-003, -4.609222e-003, 3.141999e-003, -3.467350e-002, -5.855112e-002, 1.047581e-001, -1.010338e-001, 6.729694e-002, -1.420091e-002, -2.606878e-002, 3.797550e-002, 3.167232e-002, -1.741357e-002, -6.013488e-003, -1.249728e-002, -1.286487e-002, -3.789639e-002, -1.336268e-002, 1.829784e-002, -1.477401e-002, 1.802902e-002, -3.145092e-002, 3.385324e-002, -9.090714e-002, 1.001140e-001, -6.039842e-002, -8.225518e-002, 1.376324e-002, 1.036690e-002, -1.274289e-002, -3.378338e-002, 4.525977e-002, -3.646258e-003, -1.263277e-003, -5.441024e-003, -3.608212e-003, -9.917043e-003, 9.861727e-003, 3.972039e-002, 2.068126e-002, -1.658986e-002, -5.016782e-003, 4.037494e-002, -2.951169e-002, -1.070158e-002, 6.102716e-002, -3.445370e-002, 4.363236e-002, -2.254839e-003, 9.725824e-002, -1.565510e-001, -1.235901e-002, -3.951509e-002, 6.084177e-002, -4.658027e-002, 1.765199e-002, -3.479869e-002, 1.132271e-002, -1.967427e-003, -2.876096e-002, -2.244760e-002, 7.296740e-003, 2.415186e-002, 3.251552e-002, -1.676666e-002, -1.177841e-002, 2.195088e-002, 3.538715e-003, 1.261893e-002, -3.628358e-002, 3.232254e-003, -8.382289e-002, 1.417446e-002, 1.211438e-001, -1.626008e-001, 1.528844e-001, -8.875938e-002, -1.694491e-002, 3.283206e-002, 8.229852e-003, 9.552651e-003, -1.766873e-002, -1.276548e-002, 4.228177e-003, -2.633466e-002, -2.870611e-002, -2.503219e-002, 2.433328e-002, 4.572420e-003, 5.868253e-002, -1.082020e-003, -9.881488e-002, 1.278298e-001, -1.867466e-001, 4.547872e-002, 3.616517e-002, -4.174279e-003, 1.063995e-001, -1.374912e-001, -7.988612e-003, 4.711889e-002, -3.941017e-002, -3.358567e-002, -1.848013e-002, 2.825802e-002, 1.713423e-002, 3.719370e-003, -1.502366e-003, -1.993182e-003, 1.564136e-002, -2.412333e-002, -4.649204e-003, -3.012502e-002, 1.537794e-002, 4.054337e-002, -1.153872e-001, 1.577780e-001, -6.118378e-002, -9.690120e-002, 3.840605e-002, -9.376954e-002, 3.192506e-002, -1.186983e-002, 1.110078e-002, -1.528452e-002, 1.189116e-002, 3.932315e-002, 7.842292e-003, -8.699217e-003, -1.807552e-002, 1.458662e-002, 1.127061e-002, -1.077840e-002, 2.701614e-002, -1.355794e-002, 3.002530e-002, 3.707774e-002, -1.184142e-003, 1.638970e-002, -1.164801e-001, -7.867733e-003, 9.272424e-002, 2.820592e-003, 2.911262e-002, 1.180291e-002, 3.959065e-002, -2.109287e-002, -2.081384e-002, 5.185328e-002, -2.367056e-003, -2.420151e-002, -2.189200e-002, 5.887850e-003, 1.197027e-002, 8.455522e-003, -1.269941e-002, -3.668645e-002, 4.326019e-002, -2.111095e-002, -1.691324e-002, 1.723882e-002, -4.219464e-002, 4.631042e-002, -7.473464e-003, -4.218390e-002, -1.428837e-002, 4.200049e-002, -1.353344e-002, 2.327124e-002, -3.128553e-002, 5.320961e-002, 9.942850e-003, 1.114215e-002, -2.441067e-002, 1.459473e-002, 4.487412e-003, 3.500827e-003, 2.598137e-002, -3.129067e-003, -8.642279e-004, -1.903682e-002, 5.200692e-002, -2.458043e-002, 1.657919e-002, -3.746502e-004, 3.774137e-002, -2.221838e-002, -1.079204e-002, -5.734224e-003, -2.460890e-002, 6.202482e-003, 2.164860e-002, -1.287458e-003, -2.086645e-003, 1.770666e-003, -1.783878e-002, 2.870703e-002, 1.196870e-002, 1.042611e-002, 5.369512e-003, -9.700221e-003, 1.130712e-002, -5.037223e-003, 1.105036e-002, 8.918430e-004, -1.115246e-002, 2.164377e-002, 2.108490e-002, -2.933881e-002, 8.772479e-003, 4.359986e-002, -1.822288e-002, -4.614738e-003, 2.655501e-002, -2.553636e-002, -3.737540e-003, -5.441316e-003, 5.746712e-003, 2.646317e-002, 8.000661e-003, 2.446725e-002, -9.227518e-003, -1.629540e-002, -6.482511e-003, -2.664390e-003, 2.562340e-002, 1.025942e-002, 1.850216e-002, -1.841343e-002, -1.440926e-002, 3.723485e-002, -9.883735e-003, -2.893247e-002, -6.117458e-003, -1.998060e-002, 3.061768e-002, -2.323963e-002, -7.962675e-003, 3.089600e-003, 7.907878e-003, 3.294625e-003, 1.108224e-002, 1.691972e-002, -1.105931e-002, -4.668257e-003, 1.362200e-003, -1.541858e-002, 8.296783e-003, 7.147987e-003, 1.084781e-002, 1.410615e-002, -1.149953e-002, 2.580720e-003, 1.165488e-002, 2.392566e-002, -4.715161e-002, 5.426487e-002, -3.324230e-002, -1.486867e-002, 2.181154e-002, -4.072376e-003, -9.469042e-003, -6.896286e-003, 1.529939e-002, 4.041343e-005, -6.462094e-003, -5.649472e-003, -5.842434e-003, -7.850914e-003, -1.713299e-003, -3.457817e-003, 1.924308e-002, 1.822628e-002, -9.428957e-003, -6.009050e-003, -4.766599e-003, 2.230609e-002, -1.099304e-002, -4.087725e-002, -3.552594e-002, 2.685891e-002, 3.160720e-002, -2.971263e-002, -2.987815e-003, -9.025007e-003, 5.287569e-003, 2.010948e-002, 2.043470e-003, -2.732562e-003, 4.936919e-003, -5.933367e-003, -1.983731e-003, -4.793048e-003, 5.152159e-003, 1.794262e-002, -2.637627e-003, 1.582275e-002, -8.847689e-003, -2.090209e-003, -1.368847e-002, 1.203300e-002, 2.117700e-003},

{4.254877e-003, -1.047434e-002, -3.455796e-003, -2.198449e-002, 1.977438e-002, 1.983777e-003, -7.692760e-003, -1.325385e-002, 1.928466e-002, -5.539283e-003, 2.768739e-004, 2.281360e-002, 2.281360e-002, 2.768739e-004, -5.539283e-003, 1.928466e-002, -1.325385e-002, -7.692760e-003, 1.983777e-003, 1.977438e-002, -2.198449e-002, -3.455796e-003, -1.047434e-002, 7.139074e-002, 5.404123e-003, 9.766698e-002, -1.245150e-001, 1.190842e-001, -9.654914e-002, 5.879870e-002, 1.877424e-002, -1.534868e-002,


© ISO/IEC 2004 — All rights reserved
--`,,```,,,,````-`-`,,`,,`,`,,`---

Copyright International Organization for Standardization
Provided by IHS under license with ISO
No reproduction or networking permitted without license from IHS
Not for Resale

2.136973e-002, 7.172511e-003, -8.883339e-003, -3.306871e-003, 2.624506e-002, 2.241551e-002, -1.531825e-002, 1.226225e-002, 4.651555e-002, -5.608357e-002, 1.401173e-001, -1.865793e-001, 1.162695e-001, 7.306351e-002, 8.889908e-002, -1.091625e-001, 1.462635e-001, 2.034781e-002, -5.741277e-002, 3.694275e-002, -5.509180e-003, -7.955076e-002, -8.082923e-003, 2.910082e-003, -2.171028e-002, -4.088205e-003, -5.783970e-002, -1.579650e-002, 5.201328e-002, 4.901905e-003, -5.539957e-002, 2.770344e-002, -1.980582e-002, -5.412855e-002, -1.049781e-002, 1.916584e-001, -1.835365e-001, -9.050992e-002, 1.511243e-001, -2.628896e-001, 1.259362e-001, -2.752963e-003, 6.943438e-003, -1.362850e-002, 2.125619e-002, 4.463337e-002, 2.988073e-002, 4.786666e-003, 2.173466e-002, -1.145143e-002, -1.744594e-002, 7.908661e-003, 3.374710e-002, 1.996763e-002, -1.212892e-002, 2.868748e-002, 1.732828e-002, 8.858832e-002, -8.026333e-002, 8.463607e-002, 6.776847e-002, -2.620049e-002, -6.066898e-002, 6.276318e-002, -7.502693e-002, 4.685269e-002, 4.619391e-002, -6.554324e-004, -4.244639e-003, 1.916698e-002, 4.158358e-002, 5.021343e-002, 1.851173e-002, -3.535552e-002, -4.153630e-004, 3.090815e-002, 1.207275e-003, -4.090475e-003, 4.563314e-002, -6.630532e-002, 8.856767e-002, -6.433303e-002, -2.788962e-003, -5.690200e-002, 8.666323e-002, 2.254282e-002, 2.437264e-003, -4.828132e-002, 9.428280e-002, 7.750652e-003, -2.076677e-002, 2.584077e-002, 2.865462e-002, 3.030195e-002, -1.845256e-002, 2.811631e-003, 7.411789e-003, -1.186525e-002, 5.519427e-002, 3.225238e-002, -1.831035e-003, 5.309459e-002, -3.111671e-002, 1.350967e-002, -3.682851e-002, 9.815228e-002, -4.074937e-003, 1.209674e-002, -4.686496e-002, -3.681318e-002, 6.510646e-002, 3.142282e-003, -8.068500e-003, -6.678324e-003, -1.839059e-002, 7.966155e-003, -1.057249e-002, -9.091342e-003, 3.477593e-003, -1.175658e-002, 1.555319e-002, 3.898298e-003, 1.919404e-002, -3.115213e-002, -4.005997e-002, 6.031508e-002, 5.057048e-002, -7.430223e-003, -1.481316e-002, -1.027480e-002, 2.604439e-002, 3.920956e-002, -1.316333e-002, -1.520023e-003, 2.645271e-002, -2.121975e-002, -2.238321e-002, 2.605793e-002, -1.181931e-002, 1.016140e-002, 1.287297e-002, 1.627745e-004, 9.094329e-003, -2.252558e-002, 1.447477e-002, -2.862523e-003, -1.743999e-002, 2.418598e-002, -4.196052e-002, -2.404128e-002, 1.062741e-002, 2.631332e-002, 5.308652e-002, -1.563103e-002, -5.271828e-003, 2.639214e-002, 8.314030e-003, -4.219195e-002, 1.387265e-002, 5.616188e-003, -2.635677e-002, 1.758558e-002, -8.102817e-003, -8.980750e-003, -3.044665e-003, -1.694706e-002, -2.823526e-003, -1.137063e-002, 1.967250e-004, -3.705597e-003, -2.949490e-002, -2.733183e-004, 2.618528e-002, 1.004170e-002, -2.223991e-002, 7.131112e-006, -1.457830e-002, 5.969052e-002, -5.650104e-002, -7.231177e-003, 2.825164e-002, -4.049004e-003, 4.533366e-003, -2.366977e-003, -1.050497e-002, 1.599678e-002, -4.532991e-004, 1.152475e-003, -2.744426e-003, -1.725177e-002, -2.126451e-002, -4.181745e-003, -5.159891e-003, 1.452535e-002, -9.545334e-003, -1.903966e-002, 5.130085e-002, -2.742937e-003, 5.191555e-003, 1.717568e-002, -2.864376e-002, 1.297989e-002, -1.592373e-002, 8.121764e-003, 1.125186e-002, -2.035947e-002, 3.011455e-003, 1.746544e-002, -1.949363e-003, -8.736349e-003, 4.444076e-003, 1.689964e-003, -2.606990e-002, -2.332581e-003, 2.280256e-003, 3.623517e-003, 1.581743e-002, -2.176300e-002, 2.940031e-002, -1.399507e-002, 3.048144e-002, -2.071193e-002, 1.953554e-002, -1.306869e-003, -2.883026e-002, 2.014200e-003, 7.532410e-003, -1.398300e-002, 6.459481e-003, 7.879280e-003, 9.254401e-003, -1.106434e-002, -2.071864e-002, -2.239637e-003, -5.888409e-003, 7.275155e-004, -1.259921e-002, 5.770807e-003, 6.884287e-003, -9.265090e-003, 2.490445e-002, 6.826035e-003, 2.337319e-002, 2.067363e-002, 2.932247e-002, 1.968409e-003, 7.726096e-003, -1.596091e-003, -1.566220e-002, -4.723288e-003, -3.429297e-003, -2.241064e-003, 4.679297e-003, -1.311141e-003, -7.659650e-003, 1.927375e-003, 2.913001e-003, 2.494317e-003, -1.770269e-002, -2.443169e-003, 1.064906e-002, 9.131155e-003, 1.085413e-002, 2.171359e-003, 1.054352e-002, 2.674153e-002, -2.367017e-002, -4.834650e-002, 2.256556e-002, -7.408751e-005, -1.808938e-002, 4.126939e-003, -1.337079e-003, -1.591330e-002, 6.603752e-003, 4.240539e-003, 2.807071e-003, -2.314925e-003, -5.978222e-003, 9.202087e-004, -6.312755e-004, -1.379422e-003, -8.427136e-003, 9.788354e-003, 3.756174e-003, 1.053336e-002, 1.277855e-003, 6.326511e-003, 5.055842e-003, 3.256951e-002, -2.254999e-018, 4.885064e-003, -1.300083e-002, 8.169598e-003, -5.266022e-003, 6.933820e-003, 1.128281e-002, -1.031232e-002, -1.370838e-003, -1.574403e-002, 1.513752e-002, -3.022374e-002, 3.022374e-002, -1.513752e-002, 1.574403e-002, 1.370838e-003, 1.031232e-002, -1.128281e-002, -6.933820e-003, 5.266022e-003, -8.169598e-003, 1.300083e-002, -4.885064e-003, -2.496261e-003, 2.333247e-002, 8.269385e-002, -6.186175e-002, 6.904045e-002, 3.540078e-002, 2.550696e-002, 3.453941e-002, 1.185412e-002, 6.072462e-002, 3.081665e-002, 2.202967e-002, -8.559672e-003, 1.946161e-002, 3.481154e-002, 1.063147e-002, -2.733026e-002, -1.250673e-002, 3.548928e-002, 1.048819e-002, -8.994603e-002, 8.717747e-002, 8.989296e-003, 1.360401e-002, -7.585462e-002, -5.991411e-002, 5.668699e-002, 1.424387e-002, -2.522761e-002, -3.633088e-002, 1.832491e-002, 3.986976e-002, 6.960258e-003, -1.993107e-002, -5.266766e-002, 3.593401e-002, 4.078417e-002, 1.759442e-002, 2.047733e-002, 3.337937e-002, -2.569950e-002, -1.559992e-002, -2.936389e-002, 1.171107e-001, -8.648563e-003, -7.415448e-002, 7.631720e-002, 5.878824e-002, -1.472825e-001, 6.113152e-002, -2.124829e-002, -3.185142e-003, 5.932117e-002, 7.081942e-003, -3.298611e-002, 8.353471e-003, -2.344613e-002, 1.561624e-002, -1.704409e-002, -1.026388e-002, -1.206831e-002, -7.431496e-002, -3.059662e-002, 5.056565e-002, -6.157173e-002, -3.487513e-002, 1.123508e-001, -2.193669e-001, 6.187022e-002, -7.916430e-002, 5.147666e-002,

© ISO/IEC 2004 — All rights reserved


Copyright International Organization for Standardization
Provided by IHS under license with ISO
No reproduction or networking permitted without license from IHS
Not for Resale

2.115812e-002, -2.495129e-002, -1.027800e-002, -1.331901e-002, -1.945511e-002, -2.731530e-002, 4.212168e-002, 2.369265e-003, -1.198144e-002, -2.346272e-002, -3.838321e-002, -1.288245e-002, 1.772763e-002, 2.717432e-002, -1.506487e-003, 3.835674e-002, -6.810754e-003, 2.692519e-002, -2.081526e-002, -8.159005e-002, 1.559702e-001, -1.550931e-003, -1.860761e-002, 1.068876e-001, -6.319825e-002, 1.633519e-003, -4.543345e-003, -5.704035e-002, 9.257567e-003, 3.068274e-002, 2.084891e-002, -7.227878e-003, -8.603338e-003, -2.530434e-003, -2.551438e-002, -7.437758e-003, 9.941720e-003, 3.625075e-002, -2.731190e-003, 2.118115e-002, 1.338178e-002, -4.095726e-002, 1.165520e-001, -9.540483e-002, 2.201543e-002, -4.032390e-002, -1.087597e-001, 2.543638e-003, 2.166432e-002, -2.459673e-003, 5.160730e-002, 1.940632e-002, -2.639240e-003, -1.606728e-002, -3.647442e-002, -2.079878e-002, 1.250789e-002, -6.654934e-004, 6.326054e-003, -5.126007e-004, -3.254018e-002, -7.861022e-003, -2.349856e-002, 2.824262e-002, 1.396163e-002, -1.174833e-002, 2.660283e-003, -5.141593e-002, 4.797937e-002, 2.363647e-002, -3.940917e-002, 1.200715e-002, -7.764762e-003, -1.529096e-002, -1.303006e-002, -1.774356e-002, -1.358340e-002, 9.424555e-003, -5.114181e-003, -6.629852e-003, -1.866175e-003, -1.498057e-002, 1.317781e-002, 3.801371e-002, 6.088242e-003, -3.052764e-002, 3.869127e-002, -4.359694e-002, -6.826117e-003, 5.305690e-002, 4.490087e-002, -8.420330e-002, -5.381542e-004, 2.056162e-003, -4.014693e-002, 3.504350e-002, 8.623465e-004, -3.744225e-002, 2.159717e-002, 1.046089e-002, -1.386499e-002, 1.016878e-002, 1.657239e-002, 4.585943e-003, 1.548408e-002, 7.281971e-003, -1.586431e-002, -3.089778e-003, -3.482207e-003, -1.458268e-002, 1.599818e-004, 2.164125e-002, -7.452954e-002, -6.142330e-002, 6.232436e-002, -2.752787e-002, -3.007203e-002, 2.412071e-002, -2.203018e-002, 3.266149e-003, -2.512355e-003, -9.710157e-003, 9.089167e-003, 3.225231e-003, -1.156364e-002, -1.480528e-003, 1.049951e-002, 4.732105e-003, -1.305922e-002, -1.377671e-002, 1.921489e-002, -3.756014e-002, -3.013777e-003, -2.100692e-002, -2.852328e-002, 6.010496e-002, -2.876110e-003, -6.189526e-003, -9.691653e-003, -2.115103e-002, -1.233852e-003, 1.781133e-002, -3.293748e-002, 5.703764e-003, 1.189159e-002, -3.650230e-003, -1.432041e-002, -3.942036e-003, -8.445199e-003, -1.151615e-003, 7.133671e-003, 2.036549e-003, -2.285917e-002, -1.885199e-002, 2.328964e-003, -1.460316e-002, -4.664378e-004, -1.803547e-002, 2.116904e-002, 3.173314e-002, -1.293709e-002, -1.842990e-002, 5.029900e-003, -7.333072e-003, 8.239338e-003, 6.550824e-003, -1.826108e-003, 4.865192e-003, -1.524247e-002, -1.300667e-002, 1.277638e-002, 1.373428e-002, -7.380185e-003, 8.401630e-003, -4.501286e-003, -2.226265e-002, 2.884057e-003, 3.205992e-004, -2.249209e-002, 1.157704e-002, -2.196375e-003, -1.588259e-002, -3.609430e-002, 2.813674e-002, -2.845199e-002, -1.778010e-002, 6.288407e-003, -4.372937e-003, 2.037084e-003, 3.662116e-003, -6.031307e-003, -9.284996e-003, -1.341561e-003, -4.056511e-003, -5.172323e-003, 6.080256e-003, -1.059051e-002, 3.250569e-003, -1.132403e-002, -1.085232e-002, 1.344807e-003, 1.615188e-002, -2.025004e-002, -1.651032e-002, 4.388302e-002, 4.566240e-002, -2.038544e-002, 5.114295e-003, -4.029596e-002, 1.124210e-002, -8.694408e-003, -7.839643e-003, 9.029200e-003, -3.997489e-003, -5.851540e-005, 2.708875e-004, 2.775051e-003, -1.043693e-003, -5.142013e-003, 5.529345e-003, -3.171991e-003, -8.263773e-003, -9.457294e-003, -1.637897e-003, 2.100395e-003, 7.597979e-003, 5.832263e-003, -3.504972e-002},

{6.466701e-003, -5.882737e-003, -2.080316e-002, 7.896612e-003, 1.661241e-002, 1.231497e-002, -6.065957e-002, 4.179561e-002, -1.856616e-004, 9.218817e-003, 7.325288e-003, -2.129638e-002, -2.129638e-002, 7.325288e-003, 9.218817e-003, -1.856616e-004, 4.179561e-002, -6.065957e-002, 1.231497e-002, 1.661241e-002, 7.896612e-003, -2.080316e-002, -5.882737e-003, -1.978684e-002, 1.220059e-002, 4.035480e-003, 2.235156e-002, -7.724986e-002, 5.012948e-002, -2.468383e-003, -3.694288e-002, 3.327741e-002, 1.481701e-002, 1.273323e-002, 9.159702e-003, -6.409951e-003, 2.712479e-003, 2.696964e-002, -1.357375e-004, -2.413457e-002, 1.534004e-002, 6.333257e-002, -1.097785e-001, 9.744817e-002, -5.452509e-002, 4.840575e-002, 1.454450e-001, -1.226650e-004, -8.624953e-002, 4.138959e-002, 8.935983e-003, -5.369749e-002, -6.699551e-003, -4.373154e-003, -2.975149e-002, 3.295007e-003, -8.717253e-003, 1.565735e-002, 2.994971e-003, -3.896006e-002, -5.746568e-002, -2.429326e-002, -1.044377e-002, -7.300110e-003, -3.836518e-002, -2.376064e-002, 9.553444e-002, -1.163502e-001, -1.074361e-002, 8.064545e-003, 9.388222e-002, -5.762299e-002, 4.558921e-002, -2.416172e-002, 5.693420e-002, 1.686725e-002, 7.459698e-003, 1.425690e-002, 9.921501e-004, 4.969274e-002, 2.588908e-002, 1.590903e-002, 6.678563e-003, 2.358548e-002, 1.204878e-003, -1.516774e-003, 5.182715e-002, -1.177968e-002, 4.137677e-002, 6.814002e-003, -1.108911e-001, 1.520932e-002, -5.673136e-002, -5.435379e-002, 2.275039e-001, -1.883021e-001, 9.034035e-002, 6.294040e-003, 1.948937e-002, 1.471909e-002, 2.302789e-003, -1.952494e-004, 1.877748e-003, -9.849988e-003, 1.776712e-002, 4.330904e-002, 1.469012e-003, 2.574349e-002, 4.226195e-003, 2.481740e-003, -1.088609e-003, 8.135328e-002, -2.689705e-001, 2.539042e-001, -9.165807e-002, 8.143936e-003, 4.468726e-002, -1.174729e-001, 1.348806e-001, -4.341718e-002, -1.187129e-003, -3.898066e-002, 1.842548e-002, 7.880087e-003, 3.700699e-002, 3.427326e-002, 1.986784e-002, -2.302326e-002, -3.096999e-002, 3.878215e-002, -5.148014e-003, 7.748234e-004, -1.285135e-002, -4.653995e-002, -3.710127e-002, 7.069682e-002, -1.053687e-001, 1.231254e-001, 6.178918e-002, -4.252566e-003, 4.844559e-003, -2.956627e-002, 2.626406e-002, 1.475392e-002, 4.842005e-002, -8.740424e-003, 1.599640e-003, -3.173304e-002, -1.578138e-002, -1.866283e-002, -9.557532e-004, -8.364868e-004, -


© ISO/IEC 2004 — All rights reserved

Copyright International Organization for Standardization
Provided by IHS under license with ISO
No reproduction or networking permitted without license from IHS
Not for Resale

3.916276e-002, 1.135755e-002, -2.497129e-002, 3.586293e-002, 2.529945e-003, 1.625938e-002, 1.792165e-002, -4.146440e-002, 3.717273e-002, 1.987514e-004, -8.946801e-003, 5.393322e-002, -4.999279e-002, -2.617458e-002, -2.285425e-002, -1.960007e-002, 2.449758e-002, -1.062068e-002, 1.245611e-002, -9.195288e-003, -1.126158e-002, 7.088546e-003, 9.862218e-004, 2.106174e-002, -3.064863e-002, 2.574313e-003, -1.882136e-002, 1.581145e-002, -3.347260e-002, -3.733000e-002, 6.383544e-002, -2.506452e-002, 1.432050e-002, -1.205191e-002, -2.482982e-002, 2.240721e-002, -4.292768e-002, 5.235295e-002, 1.988785e-002, -3.767748e-002, -4.188741e-003, -8.398817e-003, -1.360396e-002, -8.717745e-003, 1.709058e-003, 7.282658e-003, -6.242710e-003, 1.697541e-002, -2.785727e-002, 2.438533e-002, 3.916140e-002, -1.542033e-002, 3.237308e-002, -7.412435e-002, -2.148854e-002, -7.623742e-002, 8.752703e-002, -4.518015e-002, -1.744726e-002, 4.586984e-002, 2.338015e-002, -2.415164e-002, -7.981431e-003, -6.346505e-003, -9.122653e-004, -1.766243e-002, -2.113092e-002, 8.535335e-003, 5.502010e-003, -2.026910e-003, -4.630885e-003, 7.949472e-003, -3.379543e-003, -3.895199e-003, 6.434883e-003, -1.775296e-002, 6.480390e-003, 3.843405e-002, -2.152291e-002, 3.001576e-002, -2.037371e-002, 5.434304e-003, 2.134827e-003, -4.595855e-003, -5.425623e-003, -3.066658e-003, -4.110664e-003, -1.017266e-002, -1.437954e-002, -9.716866e-004, 1.726961e-003, 3.433871e-003, 8.794259e-003, -4.950997e-003, -1.045713e-002, 1.408298e-002, -1.173809e-003, -2.497422e-002, -1.755803e-002, 2.611264e-002, 4.154167e-002, -1.885221e-002, 2.723524e-002, 1.115628e-002, -1.545461e-002, 2.366443e-003, 1.463728e-002, -4.996806e-003, 4.149716e-003, -5.933651e-003, -1.802003e-002, -1.431229e-002, -1.079161e-003, 3.730038e-003, 9.079115e-003, -1.292174e-002, 8.471705e-004, 9.595853e-003, -1.386062e-002, 1.864450e-002, 9.667071e-003, -1.082261e-002, -9.117708e-003, 3.839484e-002, 4.501760e-002, 5.463604e-003, -7.824536e-003, 2.607023e-002, 8.624615e-003, -2.080761e-002, -9.275352e-003, -2.768313e-003, 6.430480e-004, -1.390170e-002, -3.308408e-003, 2.569470e-003, 3.944646e-004, -6.782930e-004, 7.380618e-003, -5.319349e-003, -1.584879e-002, 1.575189e-002, -8.469334e-003, -8.709637e-003, 2.266580e-002, 1.358671e-002, -2.032263e-002, -2.656315e-003, 5.857988e-003, 1.696885e-002, 8.176688e-003, 3.764585e-003, 4.155391e-003, -1.068031e-003, 1.578412e-004, -7.115308e-003, -5.993073e-004, 2.738670e-003, -1.047507e-003, -3.461602e-003, 2.504401e-003, 4.893993e-003, 2.888635e-003, -2.981525e-003, -5.495286e-004, 3.250750e-003, 1.053340e-002, -2.096104e-002, 3.028556e-002, -1.015868e-005, 2.562156e-017, -5.949612e-004, 1.254922e-002, -2.565348e-002, 1.312566e-002, 2.440435e-004, -1.752467e-002, -2.047224e-002, 1.544616e-002, -1.245105e-002, -2.697522e-002, 2.884113e-003, -2.884113e-003, 2.697522e-002, 1.245105e-002, -1.544616e-002, 2.047224e-002, 1.752467e-002, -2.440435e-004, -1.312566e-002, 2.565348e-002, -1.254922e-002, 5.949612e-004, 3.068328e-002, 8.153640e-002, -2.783126e-002, 5.958519e-002, 1.239345e-002, 1.466372e-002, 6.045360e-003, -2.790546e-003, -1.039355e-002, -1.237290e-002, 9.772184e-003, 1.884266e-003, 1.159525e-002, 1.897418e-002, -3.170338e-004, 5.942702e-002, 3.875743e-002, -1.014453e-003, 4.660645e-002, 1.323831e-003, 1.402224e-002, -4.669710e-002, 4.268514e-002, -1.120418e-001, -4.137827e-002, 5.992308e-002, -6.176191e-003, -5.745518e-002, 3.010664e-002, -1.304032e-002, -1.346273e-002, -4.229978e-004, 3.011351e-002, -1.249960e-002, -1.262293e-002, 3.566526e-003, 2.570700e-002, 5.304143e-002, 1.726592e-002, 1.407124e-002, 3.652718e-002, -1.326393e-002, -3.850331e-002, -5.099791e-003, -1.661775e-002, -2.345788e-003, 5.798891e-002, -3.988643e-002, 1.007093e-001, -1.676706e-001, 1.034884e-001, -8.692646e-003, 3.007597e-002, 1.164036e-002, 2.100217e-002, -1.748321e-002, -1.013918e-002, -9.126778e-003, -1.696242e-002, -1.245858e-003, 1.495152e-002, 1.758953e-003, -4.362757e-002, 3.299028e-002, -4.648654e-002, 1.069415e-001, -2.484590e-001, 2.025122e-001, -9.230103e-002, -7.785785e-002, -6.194715e-003, -1.717754e-003, 1.286023e-001, -2.205558e-002, -5.901190e-002, 3.397923e-003, 3.041996e-002, -2.189218e-002, 1.697374e-002, 3.869731e-002, 3.218413e-002, -5.636128e-003, -3.155465e-002, -1.812507e-002, -2.607497e-002, 2.800218e-002, -6.201622e-002, -2.886921e-002, -8.451137e-002, 7.167402e-002, -9.264080e-003, 8.599994e-002, 1.894954e-002, -3.379365e-003, -6.322732e-002, 9.839340e-003, -2.302895e-002, 4.442502e-002, -2.627769e-002, -6.116348e-002, -6.014028e-003, 2.881982e-002, 1.675257e-002, -1.919393e-002, -1.757169e-003, 7.575315e-003, 2.164440e-002, 2.370543e-003, -4.007144e-002, 2.206048e-002, 2.107447e-002, 1.562713e-002, 2.681775e-002, -4.598585e-002, 2.970333e-002, 4.251520e-002, -5.456182e-002, 1.787887e-002, 1.590324e-002, 4.759971e-003, 7.091546e-004, 5.530876e-003, 2.581012e-002, 3.704973e-002, 2.357396e-003, -2.398106e-002, -1.956084e-002, -5.515988e-003, -9.499136e-003, 5.382488e-003, 4.950511e-002, 3.221362e-002, -1.867736e-002, -3.464727e-002, -6.419726e-002, -1.679452e-002, 2.890114e-002, -4.605918e-002, -1.212770e-002, 2.122833e-002, 2.198423e-002, 2.124858e-002, -4.907091e-002, -1.107403e-003, -2.013728e-002, 2.300503e-003, -2.350825e-002, -7.275857e-003, -2.035286e-002, 2.448184e-002, 3.701330e-003, -3.445232e-002, 1.566513e-003, -1.043155e-002, -6.976007e-003, 4.568359e-004, -6.542941e-003, -2.693510e-002, 3.679991e-002, 2.931408e-002, 4.959338e-002, -3.879362e-002, 7.171222e-002, 2.039519e-003, -6.805616e-002, 5.151061e-003, -4.615437e-003, -1.683834e-002, -1.912017e-003, 5.332790e-003, -3.278655e-002, 1.708411e-002, 3.665886e-003, 1.370762e-003, 2.298313e-002, -4.001407e-002, 8.642484e-003, 1.464249e-002, -1.567618e-002, -1.168907e-003, -4.664906e-004, -2.195187e-002, -3.844865e-002, 5.821499e-002, 1.978323e-002, -1.471931e-002, 6.642935e-003, -1.871107e-002, 1.935145e-002, -3.562326e-002, -3.010416e-002, -

© ISO/IEC 2004 — All rights reserved


--`,,```,,,,````-`-`,,`,,`,`,,`---

Copyright International Organization for Standardization
Provided by IHS under license with ISO
No reproduction or networking permitted without license from IHS
Not for Resale

2.425243e-003, -1.886343e-002, 1.030746e-002, -3.375972e-003, 1.940887e-002, 6.398410e-003, 3.127942e-002, 2.590141e-002, -2.255419e-002, -2.225644e-002, 8.795840e-003, -1.021413e-003, -7.341771e-003, -2.100161e-002, 2.087262e-002, -2.860631e-002, -2.241044e-002, 8.349596e-003, -1.295490e-002, -6.341323e-003, -1.625362e-002, 9.915570e-003, -8.863641e-003, -1.297784e-002, -5.081478e-003, -1.501273e-002, 1.999219e-002, -1.580125e-003, -8.956140e-003, 1.424004e-002, -5.723778e-004, 1.514053e-003, -9.473804e-003, -1.083205e-002, 1.365505e-002, 1.326606e-002, -2.467853e-002, -2.182631e-002, 1.004339e-002, 5.076393e-002, -2.939113e-003, -2.584568e-002, -2.618086e-002, 6.930011e-003, -1.759460e-002, -2.526477e-003, 1.263209e-003, -1.039216e-002, 5.660817e-003, 4.208750e-003, 6.529552e-003, 2.347364e-003, -3.643481e-003, 3.111606e-003, 1.128084e-003, 1.381243e-003, -1.429920e-002, -8.994059e-003, -2.650997e-002, -8.590861e-003, 2.770759e-003, -3.312962e-002, 1.368237e-002, 9.909036e-003, -2.026972e-002, -9.839871e-003, -1.964615e-002, -9.975251e-003, -8.486150e-004, 5.040767e-003, -8.561083e-003, -1.879741e-003, 6.168863e-003, 4.227413e-003, -5.395811e-003, -2.750020e-003, 1.052802e-002, 3.734141e-003, -5.155498e-003, 3.245032e-004, 3.046454e-003, -3.031067e-002, -4.671441e-003, 4.937644e-003, 5.171557e-004, 1.880287e-002, -9.695492e-003, 3.281255e-002, -4.474837e-002, -7.246136e-003, -4.491123e-003, 5.857787e-003, -8.496112e-003, -2.767858e-003, -3.365336e-003, 1.115765e-003, 2.774229e-003, 3.167556e-003, -2.128101e-004, -4.076045e-003, -1.017714e-003, 7.476385e-003, -1.224310e-002, -8.753273e-004, 1.524613e-002, -4.795583e-002, 2.636238e-002, 9.698563e-003},

{-2.388658e-003, -8.250326e-003, 4.546268e-003, 2.295263e-002, -2.058058e-002, -1.681148e-002, 3.982485e-002, -6.857218e-003, -2.276474e-002, 4.619929e-002, -4.026895e-002, -1.385204e-002, -1.385204e-002, -4.026895e-002, 4.619929e-002, -2.276474e-002, -6.857218e-003, 3.982485e-002, -1.681148e-002, -2.058058e-002, 2.295263e-002, 4.546268e-003, -8.250326e-003, 5.396582e-002, -4.233980e-002, -3.499702e-002, -3.500397e-002, 4.538688e-002, 3.775364e-002, -4.683961e-002, 2.783401e-002, 7.081777e-002, -2.515188e-002, 1.764391e-002, 8.181918e-004, 5.568998e-003, -8.845364e-003, -7.216767e-002, 5.454792e-002, 1.566282e-003, -1.226287e-002, -1.644023e-002, 4.445303e-002, -4.264240e-003, -6.596317e-003, -6.633613e-002, 4.228449e-002, -8.413570e-002, 7.059142e-002, 1.536733e-002, -2.206168e-002, -2.065654e-002, 9.916103e-002, 6.372506e-004, -2.466171e-002, 3.375633e-002, -3.963653e-003, -4.532027e-004, 1.716001e-002, -2.177023e-002, 1.030436e-002, -3.866340e-002, 5.116166e-002, 6.305983e-002, -5.329217e-002, 4.906148e-002, 1.812193e-002, 1.538364e-002, -1.170994e-002, 5.286255e-002, 1.837785e-001, -7.213153e-002, -1.521348e-002, -2.660533e-002, 5.561113e-002, -3.228305e-002, -3.378390e-002, -5.884167e-004, -1.046123e-002, -3.262895e-002, -2.194674e-002, -9.680990e-003, 1.308298e-002, -1.787256e-002, 4.832167e-003, -2.342563e-002, 1.098177e-002, 6.472111e-002, -3.266814e-002, -3.160348e-002, -7.190921e-002, 7.441315e-002, 7.280152e-002, -1.016838e-001, 1.565048e-002, 1.149011e-002, -2.578663e-002, 9.965436e-004, -5.595108e-002, -6.808596e-003, 1.735333e-002, -2.568113e-002, 2.902831e-003, 2.042605e-002, 8.983837e-003, -3.345172e-002, -3.310202e-002, -1.532020e-002, 1.943909e-002, -3.154828e-002, -7.027058e-002, 1.040526e-003, 3.143364e-002, 4.718466e-002, -1.058762e-001, -8.951958e-002, 2.294491e-002, -1.165853e-001, -1.773774e-002, 6.366802e-002, -6.124293e-002, 6.670749e-002, 3.893965e-002, -1.702400e-002, -6.561778e-003, -8.060971e-003, -6.382441e-004, -4.901112e-004, 1.059310e-002, -9.967547e-003, -2.282548e-002, 5.470401e-003, 1.151309e-002, 1.159193e-002, 2.877031e-002, -2.592972e-002, -7.764667e-002, 2.580355e-002, 1.519523e-002, -5.293253e-002, 8.953294e-003, 6.368683e-002, -1.253694e-001, 6.704709e-002, -4.448849e-002, -1.235415e-002, -8.764416e-003, -1.682532e-003, 3.445253e-002, 4.254922e-003, -1.900926e-002, 1.899226e-002, 4.445392e-002, 4.607630e-002, 2.158492e-002, -1.478679e-002, 3.912761e-002, -8.510434e-002, 1.058060e-002, -1.286232e-002, 2.635441e-002, 1.879198e-003, -9.729426e-003, 4.930949e-002, -6.727327e-002, 8.724713e-002, -2.478991e-002, 5.121941e-003, -1.188735e-002, 9.911219e-003, 1.652432e-002, -1.089828e-002, -4.523099e-003, 1.163216e-002, -9.844150e-003, -2.650736e-002, -4.794160e-003, 5.761830e-003, 5.149503e-003, -3.191630e-002, 4.034623e-002, -3.999816e-002, -4.484191e-002, 2.213628e-002, -2.268138e-002, 2.565620e-002, -5.937857e-004, -8.150761e-003, 2.913179e-002, -9.275861e-003, -3.623439e-002, 2.965877e-002, -8.239058e-003, -1.744159e-002, 1.869505e-002, -1.191693e-002, 4.901743e-003, 1.524090e-002, -6.575295e-003, -4.668460e-002, -3.850061e-003, 1.597064e-002, 5.109143e-002, -2.671984e-002, -6.204582e-003, 1.258884e-002, -8.039454e-003, -4.589159e-003, -2.468571e-002, 2.112775e-002, -1.718833e-002, -3.048519e-003, -2.860864e-002, 4.671042e-002, -3.785432e-003, -1.002410e-002, 1.692485e-002, -1.041501e-002, -1.891508e-004, -7.711823e-003, 2.054786e-003, 8.815967e-003, 4.274121e-004, -2.217456e-002, 1.391193e-002, -1.372279e-003, 2.848286e-002, -4.073039e-002, -1.652794e-002, 9.344938e-003, 3.405162e-002, -1.892933e-002, 1.960520e-002, -5.647803e-003, 5.480985e-003, -1.334390e-002, -1.550910e-002, 6.507572e-003, 9.823508e-004, -1.090532e-002, -6.973232e-003, -9.279346e-003, 3.724852e-003, -2.389726e-003, -1.109826e-002, -6.557312e-004, 2.291152e-002, -8.231411e-003, 1.152424e-002, -1.600481e-003, 2.374851e-002, -1.334760e-002, -6.406831e-002, -5.393069e-002, 2.316201e-002, -2.450880e-002, 4.478549e-002, -2.835097e-002, -2.859746e-002, 2.874743e-002, -1.640799e-002, -1.420545e-002, -1.447312e-003, 1.278163e-002, 5.197539e-003, -1.032828e-002, -2.651725e-003, 1.949354e-002, -3.902036e-005, -2.374785e-003, 1.274851e-002, 1.694184e-003, -


© ISO/IEC 2004 — All rights reserved

Copyright International Organization for Standardization
Provided by IHS under license with ISO
No reproduction or networking permitted without license from IHS
Not for Resale

1.771905e-002, 4.522749e-003, 1.648628e-002, -5.488238e-003, -6.234095e-002, 1.841262e-002, 3.200764e-002, -4.999474e-002, 3.276105e-002, -6.551373e-003, -5.461753e-003, -2.196046e-002, -2.092816e-003, 1.495345e-002, -2.522152e-003, -5.119638e-003, -1.038191e-003, -9.265674e-004, -1.369820e-003, 1.499277e-002, -3.744261e-003, -1.015705e-002, -1.090710e-002, 4.175986e-002, -3.361168e-002, 5.042898e-003, 1.497504e-002, 1.731378e-002, -2.088243e-002, -1.925259e-002, 4.010607e-002, -2.552108e-002, -6.505992e-003, -3.325146e-003, 3.929027e-003, 5.084434e-005, -9.858570e-003, 6.334455e-003, 6.597009e-003, 1.006355e-002, -3.321207e-003, -1.977003e-003, -8.604560e-003, 1.800262e-002, -3.727054e-003, -2.727611e-003, -1.630269e-002, 3.919490e-002, -2.140065e-002, -2.046639e-002, -4.706826e-017, 6.997508e-003, -3.789338e-003, -9.595583e-003, 9.035998e-003, -1.616960e-003, 3.547392e-003, -8.969089e-003, 2.643560e-003, 2.831014e-002, -2.168194e-003, -1.019040e-002, 1.019040e-002, 2.168194e-003, -2.831014e-002, -2.643560e-003, 8.969089e-003, -3.547392e-003, 1.616960e-003, -9.035998e-003, 9.595583e-003, 3.789338e-003, -6.997508e-003, -2.324113e-002, -2.231297e-002, -4.323165e-002, -4.661866e-002, 7.584110e-002, -4.355282e-002, -8.606808e-002, 2.781416e-002, 4.735466e-002, -5.622876e-002, -3.958926e-002, 9.037922e-003, 2.194883e-002, -1.928339e-002, -2.579639e-002, 1.125301e-002, 6.933362e-003, 5.308410e-003, -9.849160e-002, 7.304104e-002, 4.631556e-002, -1.245273e-001, 3.715269e-002, 7.824116e-002, -8.980179e-002, 2.266167e-001, -1.053887e-001, -8.361348e-002, 1.336390e-001, -1.002003e-002, 3.713908e-002, -1.947949e-002, 3.325336e-002, 4.792167e-002, 4.609294e-002, -1.417057e-002, -1.323928e-002, 4.263262e-003, -4.421354e-002, -2.769660e-002, -3.032578e-002, 1.463197e-001, -5.503477e-002, -1.480576e-001, 2.230490e-001, -7.451389e-002, -3.372439e-002, 7.726588e-002, -7.974740e-002, 8.575471e-002, -2.450452e-002, -3.851725e-002, 1.820318e-002, -2.586067e-002, 2.968738e-002, 1.952587e-002, -1.407070e-002, -5.526813e-002, 2.597426e-002, 2.537047e-002, 4.027184e-004, 4.039205e-002, 1.044179e-002, 7.808298e-003, -2.702427e-003, -1.354984e-002, 9.736547e-002, -2.421996e-002, -3.227657e-002, 9.327133e-002, 5.669885e-002, -8.682810e-002, -8.402225e-005, 6.328836e-002, -5.290645e-002, 3.437585e-002, 3.408194e-004, -8.344776e-003, -1.643869e-002, -5.065651e-002, -3.110823e-002, -2.829757e-003, -2.799322e-002, -4.381059e-004, -5.096139e-002, -4.334201e-002, 2.209794e-002, -7.966394e-002, 6.091706e-002, -2.893374e-002, -1.076253e-001, 3.365932e-002, 2.676473e-002, -7.629116e-002, 7.283108e-002, 3.365896e-002, -8.040574e-002, 1.040055e-001, -1.682563e-002, -3.940893e-002, 1.411547e-002, -4.451195e-003, -4.701451e-003, 1.400630e-002, -5.526078e-003, 1.098805e-002, -1.093405e-002, 2.844692e-002, -3.341958e-002, -8.733734e-002, 1.565830e-001, -1.381027e-001, 5.817518e-002, 4.958681e-002, -1.964521e-003, 1.012238e-002, -3.355437e-002, 3.107802e-002, -5.348512e-003, 3.983117e-002, -5.066005e-002, -2.176555e-003, -3.087095e-002, 1.790748e-002, 1.339450e-002, -1.417269e-002, -1.861782e-002, -7.381224e-003, -3.942305e-002, 1.102704e-002, 3.651439e-002, 7.596770e-003, 1.537867e-002, -7.609423e-002, 8.574908e-002, 4.267866e-002, -3.830734e-002, 1.336620e-002, -5.224821e-002, 8.817490e-002, -3.284580e-002, 1.127109e-002, -2.276417e-002, 2.300803e-002, -3.235949e-002, 4.733882e-002, 4.087698e-002, -5.087614e-002, -2.555634e-002, 5.225616e-003, 5.336553e-004, 2.878709e-003, -2.523951e-002, -1.362018e-002, 4.564335e-002, -1.075158e-002, 6.136563e-004, 5.642739e-003, 3.607302e-003, -3.205954e-003, 2.103086e-002, 7.952108e-002, -2.804623e-002, 3.991051e-002, 5.504775e-002, -5.832012e-002, 1.616074e-002, 3.102086e-003, -2.800220e-005, -3.602563e-002, 9.108695e-003, 2.287448e-002, 1.516684e-002, 4.505639e-003, 1.183949e-002, 1.081654e-002, 1.822675e-002, -5.044888e-002, -1.945688e-002, 6.896215e-002, -8.351988e-002, 4.452089e-002, 1.041664e-002, -1.053088e-002, 2.469400e-002, 4.035667e-002, 2.560923e-002, -6.336216e-002, 5.790064e-002, -1.733736e-002, 1.025974e-003, -1.376767e-003, 6.698657e-003, -1.284882e-002, 3.810839e-003, -6.636826e-003, 1.230760e-002, -5.760753e-003, 3.036342e-003, -1.429968e-002, 2.204265e-003, -3.127980e-002, -5.911705e-002, 7.862371e-002, -4.802075e-002, 8.657296e-003, -9.477529e-003, 3.321008e-002, 5.000389e-002, -1.680078e-002, 2.424727e-002, -4.729087e-002, 1.445523e-002, -2.320489e-003, 2.260703e-002, -1.867395e-002, 1.290951e-002, 3.882528e-003, 1.243574e-002, -4.521916e-003, 1.775570e-002, -1.614425e-002, -1.140711e-002, 1.593676e-002, -2.018657e-002, 2.091530e-002, -6.723140e-002, 1.834997e-002, -3.924402e-003, -1.290682e-002, 5.352854e-003, 5.118594e-002, -6.428563e-003, -4.963629e-003, -1.213651e-002, 2.574748e-003, 1.273578e-002, -2.210279e-002, 1.267101e-002, 9.795377e-003, 8.779194e-003, -8.675796e-003, -2.078056e-004, -2.042522e-002, 1.008093e-003, 1.069460e-002, -1.163667e-002, 1.010425e-002, 1.300959e-002, 2.509140e-003, -2.662949e-002, -1.620322e-002, 1.448948e-002, 5.834526e-002, 2.202694e-003, 9.348912e-003, -4.593978e-003, 7.919261e-003, 5.229138e-003, -2.669161e-002, 1.776527e-002, 1.453730e-002, -6.703623e-004, -9.846445e-003, -5.870509e-003, -1.021051e-003, 6.844195e-003, -5.889291e-003, -5.604050e-003, 2.851986e-002, -6.656370e-003, -2.569003e-002, 2.240487e-002, -9.020109e-003, -5.812196e-003, -3.490813e-002, 3.760051e-002, 9.034188e-003, -6.009701e-003, 2.211962e-002, -1.625319e-002, -1.842394e-002, 1.222589e-002, 5.648171e-003, -4.014420e-003, 3.267673e-003, 2.884286e-003, 5.704603e-003, -2.858702e-003, 8.515860e-004, 1.774754e-003, -5.112207e-003, 5.708230e-003, 4.361950e-003, -1.193240e-002, -2.544862e-002, 9.789744e-004, 8.499207e-003, -1.353850e-002},

© ISO/IEC 2004 — All rights reserved


Copyright International Organization for Standardization
Provided by IHS under license with ISO
No reproduction or networking permitted without license from IHS
Not for Resale

{2.822046e-003, 1.333924e-002, -3.511274e-002, 3.862291e-002, 9.086048e-003, -2.802686e-002, 2.517374e-002, 3.130435e-003, -3.592172e-002, 5.089634e-002, -5.525784e-002, 3.575464e-002, 3.575464e-002, -5.525784e-002, 5.089634e-002, -3.592172e-002, 3.130435e-003, 2.517374e-002, -2.802686e-002, 9.086048e-003, 3.862291e-002, -3.511274e-002, 1.333924e-002, -1.736368e-002, 1.124383e-001, 1.373519e-002, -6.183524e-002, 5.372827e-002, 3.968632e-002, -5.035689e-002, 3.176497e-002, 6.768707e-002, -8.744783e-003, 3.143648e-002, -2.312667e-002, -1.748865e-002, 5.653068e-002, 1.137446e-002, 6.606493e-002, 1.841817e-002, -9.707504e-003, 9.662369e-002, -5.154213e-003, -1.800733e-002, 3.119735e-002, 7.185308e-002, -3.598481e-002, -9.934622e-002, 1.269540e-001, -3.522068e-002, 1.637555e-002, -4.094964e-002, -3.404726e-003, 2.845923e-002, -7.401315e-003, 1.093601e-002, -1.217015e-002, 8.542840e-003, 2.770612e-002, -9.390352e-003, 2.817291e-002, 2.354183e-002, 2.148024e-002, 8.226533e-003, 1.491574e-002, -9.697331e-002, 9.686931e-002, -4.201942e-002, -3.691043e-002, -4.956343e-003, 4.335220e-002, -1.369283e-002, -5.639475e-002, 6.459330e-002, -2.431001e-002, -1.820999e-002, -2.799052e-002, 2.657954e-002, 1.296794e-002, -1.176534e-002, -1.762314e-002, -2.659504e-002, -3.463898e-002, -6.764482e-003, 4.526575e-002, 1.011193e-002, -5.329811e-002, 3.610397e-003, 1.148422e-001, -4.045903e-002, -4.310881e-002, 1.527052e-001, 3.399151e-002, -2.469215e-002, 1.549964e-002, 3.673809e-002, 1.139990e-002, -1.331786e-002, 1.714463e-002, -1.346958e-002, -4.521528e-003, -3.773748e-005, 6.818090e-003, 1.405956e-003, -8.501627e-004, -1.668825e-002, -3.108558e-002, -1.446241e-002, -8.060572e-003, 4.181960e-002, -2.737112e-002, -4.034694e-003, -2.969949e-002, 7.563775e-002, -9.285709e-002, -6.779962e-002, 2.647801e-003, 6.706150e-002, -6.725290e-002, -3.370148e-002, 3.058764e-002, -4.474330e-003, -6.738974e-003, 1.014446e-002, 1.238866e-002, -1.835896e-003, 1.298414e-002, 1.023622e-002, 2.421963e-002, 2.916000e-002, -2.780234e-002, -2.220869e-002, -5.349564e-002, 2.166445e-002, 1.149625e-002, -1.785136e-001, 1.379601e-001, -5.946707e-002, 2.154473e-001, -1.145286e-001, -5.703660e-002, 4.411984e-002, -4.273807e-003, -4.030397e-002, -1.237900e-002, 3.558495e-002, 2.410019e-002, -2.206083e-002, 1.794035e-002, -3.856134e-003, -1.328924e-002, 2.080208e-002, 1.155192e-003, 3.370941e-002, 1.969618e-002, 7.778655e-003, -4.950640e-002, 1.565173e-002, 8.806590e-002, -5.789593e-002, -7.337862e-002, -1.095201e-001, 2.202823e-003, 1.267812e-002, 1.116844e-002, -1.653575e-002, 2.010544e-002, 3.022182e-002, 3.438145e-002, 2.402441e-002, 2.868811e-002, -2.158438e-003, -2.113044e-003, -1.413330e-002, -3.561075e-002, 1.423554e-003, -1.736721e-002, 2.346857e-002, 6.165503e-002, 3.904444e-002, -3.957493e-002, -3.218245e-002, -7.187415e-003, 1.956755e-002, -3.297557e-002, 2.651295e-002, -9.825718e-003, 1.955272e-003, 5.414727e-002, -3.611901e-002, -2.872447e-002, 1.598952e-002, 1.149208e-003, -1.695221e-002, 3.223990e-003, -2.380921e-003, -9.191660e-003, -4.413242e-004, -1.990590e-002, -1.672054e-002, -5.113298e-005, -2.390981e-002, -2.630912e-002, 3.196621e-002, 2.412625e-002, -1.158368e-002, 5.208171e-002, 1.790574e-002, -2.800592e-002, 2.778167e-002, -5.428726e-005, -3.127332e-002, 2.239632e-002, 1.873117e-002, 3.703342e-003, -4.577399e-003, 8.573204e-003, 1.228510e-002, 1.071157e-002, 7.382377e-003, -2.579425e-003, 8.208612e-003, 9.671319e-003, -1.489367e-002, 9.931404e-003, 1.756897e-002, -3.052718e-002, 1.195391e-002, -2.692129e-002, 1.539951e-002, 6.330875e-002, -2.392462e-002, 1.622634e-003, 1.434500e-002, 1.028536e-002, 3.269775e-003, -7.296848e-003, -1.459734e-002, -5.315239e-003, 1.450432e-002, -3.976370e-003, -7.438489e-003, -3.552104e-003, -1.737458e-002, -5.153796e-003, 6.895651e-003, 3.313920e-003, -2.128618e-002, -4.264289e-003, 1.031811e-002, 2.416075e-002, 1.990721e-002, -3.072749e-002, -1.489113e-002, -2.416933e-002, 2.590301e-002, -1.144019e-002, 3.479449e-002, -1.948043e-003, -3.130004e-003, -4.451678e-004, -9.525240e-003, -1.090148e-002, 2.778436e-003, -4.888861e-003, -5.828097e-003, 3.670048e-003, -7.365017e-004, 5.641622e-003, 1.164592e-003, -3.412974e-003, 9.564036e-003, 2.753282e-002, -8.915785e-003, 4.560775e-002, -3.298083e-002, -4.757797e-002, 2.274512e-004, 2.664006e-002, -1.806724e-002, -5.425562e-004, 1.268877e-002, 2.297578e-003, -1.628994e-003, 3.151889e-003, 8.456104e-003, -5.364849e-003, 7.267521e-004, 7.443365e-003, -6.554880e-004, -3.465202e-003, -3.634652e-004, 6.329056e-003, -9.212007e-004, 4.289369e-003, 2.434998e-002, -7.997201e-003, 7.938888e-003, 2.074038e-002, 1.277773e-002, -3.989953e-002, -8.911915e-004, 9.571821e-003, 2.074920e-002, -2.098409e-003, -3.970537e-003, 8.800144e-003, -2.633591e-003, -1.152204e-002, 3.017918e-004, -3.484765e-004, 1.881080e-003, 2.180259e-003, -9.380050e-003, -6.559248e-003, 9.315328e-003, 4.323273e-003, -6.321081e-003, 1.966122e-002, 4.257678e-003, 1.171492e-002, -3.629525e-002, -3.309401e-018, -2.590079e-003, 8.904359e-003, -2.169668e-002, 3.310389e-002, -2.432374e-002, 6.263773e-004, 7.490817e-003, -1.205136e-002, 1.645372e-002, -6.649643e-003, 1.833811e-002, -1.833811e-002, 6.649643e-003, -1.645372e-002, 1.205136e-002, -7.490817e-003, -6.263773e-004, 2.432374e-002, -3.310389e-002, 2.169668e-002, -8.904359e-003, 2.590079e-003, 2.102854e-002, -2.173965e-002, -3.052049e-002, -5.239089e-004, 7.701215e-003, -1.840611e-002, 5.508559e-002, -9.326034e-003, 5.399046e-003, -6.557320e-003, -1.275396e-003, -3.397762e-003, -8.893301e-003, -3.422174e-002, -2.778981e-002, -1.611518e-002, -2.556999e-002, 8.268508e-002, -3.559341e-002, -3.156639e-002, 4.797288e-002, -6.511504e-002, -2.796060e-002, -9.460761e-002, 1.085485e-001, -1.101870e-001, 1.322457e-001, -5.584196e-002, 3.333324e-003, -2.357062e-002, 6.962986e-002, 2.103064e-002, -6.297029e-003, -2.998331e-002, -1.257568e-002, -1.346761e-002, -1.182434e-002, 8.972500e-003, 1.758187e-002,


© ISO/IEC 2004 — All rights reserved

Copyright International Organization for Standardization
Provided by IHS under license with ISO
No reproduction or networking permitted without license from IHS
Not for Resale

3.494765e-002, -5.154886e-002, 1.475758e-003, 4.544602e-002, 6.627449e-002, -1.610685e-001, 1.560614e-001, -6.995727e-002, -2.156808e-002, 5.688500e-002, -8.442575e-002, 4.694051e-002, 4.123226e-002, 2.681745e-002, -1.688518e-004, -3.183964e-003, -1.138417e-002, 1.902447e-002, -1.184016e-002, 2.952340e-002, 1.323940e-002, -1.990144e-002, -6.698394e-003, 1.342432e-003, 5.129090e-002, 2.029009e-002, 5.147162e-002, -1.574191e-001, 1.647290e-001, -3.441262e-002, 1.167734e-001, 5.648095e-002, 6.536249e-003, 3.873259e-002, -5.754722e-002, -4.184612e-003, 2.377098e-002, 3.033166e-003, -1.054399e-004, 2.176850e-002, -5.272341e-002, -5.123328e-002, -1.091429e-002, -3.182556e-002, 1.622495e-002, 2.072067e-002, 1.777115e-002, 5.100980e-002, 2.304178e-002, -6.368810e-002, -1.394544e-003, 7.280037e-002, -1.394212e-001, 1.037402e-001, -1.169140e-001, 4.693028e-002, -8.934503e-002, 9.174229e-002, -3.511593e-002, -6.963891e-002, -3.016640e-003, -1.759870e-002, -2.458262e-002, -8.982539e-003, 1.412346e-002, 2.450587e-004, -1.953278e-002, -1.479206e-002, 2.427161e-002, 1.549751e-002, -5.428505e-002, -3.231414e-002, 7.513709e-002, -1.174673e-002, 5.736826e-002, -4.358941e-002, -1.128989e-002, 6.269277e-002, -8.295020e-002, 9.510271e-002, -3.523813e-002, -9.992421e-003, 8.992410e-002, -1.782571e-002, -2.503650e-002, -1.280161e-002, 4.224649e-003, 1.409863e-002, 3.780934e-003, 4.570596e-003, 1.934898e-003, -2.230855e-002, -5.631000e-002, 6.472977e-002, -2.788578e-002, -1.293920e-002, 1.169001e-001, -1.657527e-001, 1.061086e-001, -4.445926e-002, 7.136398e-002, 4.457899e-002, -5.754984e-002, -3.912765e-002, 1.376718e-002, -2.739449e-002, 1.357968e-002, 5.993968e-003, 6.175211e-003, -2.461359e-005, -2.352726e-003, -6.894561e-003, 5.418229e-003, -9.777331e-004, 1.220402e-002, -2.828818e-004, -4.462534e-002, 4.354666e-002, -4.894649e-002, -3.111024e-002, 3.621916e-002, 5.547878e-002, 6.232631e-002, -3.753523e-002, 4.496474e-002, -6.231911e-004, 4.121540e-002, -3.336724e-002, 4.548681e-002, 1.763561e-002, -2.771245e-003, -1.202807e-002, -8.212886e-003, -5.645543e-003, -1.920419e-003, -2.294949e-002, 5.253432e-004, -1.051512e-002, -7.861965e-003, 2.007405e-002, 4.507980e-003, 6.827747e-003, 9.574495e-003, 9.015610e-003, -5.717776e-002, 2.575222e-002, 1.966458e-002, -2.424972e-004, 1.152047e-002, -3.460323e-002, -5.483170e-003, -3.680202e-003, -2.176142e-002, -2.057221e-003, 1.894621e-002, 6.924814e-003, 1.347308e-003, 3.332970e-003, 9.920203e-003, -1.533005e-002, -1.013535e-002, -4.734852e-004, -6.409853e-003, -9.934053e-003, -1.246170e-002, -2.967789e-002, 1.198777e-002, 1.846968e-002, 9.567499e-002, 2.134576e-002, -1.493965e-002, 6.963779e-003, -1.172303e-002, -1.969550e-002, -1.753814e-002, -9.421953e-004, 2.307775e-002, 3.269343e-003, -3.577326e-003, 6.834762e-004, 5.654330e-003, -3.145214e-003, -1.271972e-002, -1.637766e-003, 1.430258e-002, -1.484067e-002, -2.435081e-002, -3.737428e-002, -6.831407e-003, 3.994363e-003, -7.023329e-003, -1.807270e-003, 4.837387e-002, 1.875880e-002, -1.427514e-002, 1.386983e-003, -2.286826e-002, 1.494211e-002, -2.048435e-003, -4.574413e-003, 1.142962e-002, -2.004367e-003, -6.891015e-003, -8.884738e-004, -1.623426e-003, 7.172524e-003, -1.428436e-002, -1.044583e-002, 5.702372e-003, -2.366728e-002, -5.851409e-003, -1.568141e-002, 4.662571e-003, 3.676644e-002, 5.985328e-002, 1.926865e-002, -1.571860e-002, 2.410640e-002, -5.627636e-003, -1.094048e-002, -2.309309e-002, -7.290273e-003, 4.072952e-003, -5.768158e-003, -5.840865e-003, -3.215514e-003, -9.599551e-004, 6.425579e-003, -6.490977e-003, 1.606882e-003, 1.222951e-003, -1.706988e-002, -1.642894e-002, 5.294071e-003, 2.823447e-002, -1.611301e-002, 1.224181e-002, 6.059003e-002, 3.816661e-003, 1.389017e-002, 6.076308e-003, -1.881235e-002, -1.713893e-002, 1.484795e-002, 3.435264e-003, 2.643264e-003, 3.433899e-003, -3.635216e-003, 3.451297e-003, -5.535540e-003, -5.817025e-004, 9.934658e-003, -5.529947e-003, -2.507011e-003, 1.019080e-002, -8.019669e-003, -1.610434e-002, -3.129202e-003, 2.834124e-002, -1.350522e-002},

{-2.265096e-003, -1.776787e-002, 5.073005e-002, -6.600267e-002, -6.903122e-003, 3.286973e-002, -2.525025e-003, -4.093209e-002, 5.095968e-002, -2.644002e-003, -1.516149e-002, 3.319202e-002, 3.319202e-002, -1.516149e-002, -2.644002e-003, 5.095968e-002, -4.093209e-002, -2.525025e-003, 3.286973e-002, -6.903122e-003, -6.600267e-002, 5.073005e-002, -1.776787e-002, 6.946433e-004, -4.143662e-002, 4.038315e-002, -6.925733e-002, 3.079284e-002, -1.030260e-002, -2.220489e-002, -2.418447e-002, -1.402514e-002, -3.323843e-003, 3.617791e-003, -2.277407e-002, 2.003798e-002, 2.609318e-002, -1.223099e-003, 1.275632e-002, 1.928009e-002, -1.805045e-002, 3.786185e-002, 9.730385e-003, -1.433772e-002, -2.487005e-003, 3.387506e-004, -7.688026e-002, 4.888566e-002, 5.118203e-002, 1.071714e-002, -3.112808e-002, -5.987959e-002, 4.267815e-002, 3.046539e-003, -3.427190e-002, -4.720693e-005, -1.103084e-002, -4.687052e-003, 2.640532e-002, 2.715522e-003, 8.430010e-003, -7.189129e-002, -4.425882e-002, 8.608720e-002, -7.163137e-002, -7.348728e-002, -5.265563e-003, 3.073252e-002, 4.790574e-002, 1.150342e-001, -1.080569e-001, -7.135580e-003, -1.418428e-002, 5.353632e-002, 2.086512e-002, -5.786630e-002, -4.218555e-002, 2.554505e-002, 3.283817e-002, 1.552774e-002, -2.377249e-002, -1.374380e-002, 1.742272e-002, 6.379199e-002, 8.145885e-003, -2.502170e-003, -3.689557e-002, -3.565890e-002, 1.434672e-001, -6.996862e-002, 2.571548e-002, 1.447440e-002, 7.189599e-003, -2.153109e-002, -2.880859e-002, 3.676029e-002, -1.090249e-001, 3.633654e-002, -1.977223e-003, 5.319273e-002, -7.736641e-003, -3.865152e-002, -9.133653e-003, -8.171412e-003, 2.933798e-002, 8.896805e-003, -1.800666e-002, 5.667206e-002, 1.881504e-002, 4.860657e-002, 4.823189e-002, -4.673659e-002, 7.650285e-002, 3.346050e-002, -1.018503e-001, -1.325136e-001, 7.872059e-002, -3.665452e-002, 1.919980e-002, 6.173990e-002, -

© ISO/IEC 2004 — All rights reserved


Copyright International Organization for Standardization
Provided by IHS under license with ISO
No reproduction or networking permitted without license from IHS
Not for Resale

2.065243e-002, 3.517155e-002, -3.938773e-002, 1.206002e-003, 5.479803e-002, 1.363080e-002, -1.068396e-002, 1.065536e-002, 3.343352e-002, 7.288023e-002, -2.926577e-003, -1.408669e-002, -9.580971e-003, 4.742062e-002, 7.361331e-003, -4.330603e-002, 4.341623e-002, 2.639404e-002, 9.826119e-002, -4.334528e-002, 5.152419e-002, 6.788641e-003, -8.661084e-002, -1.497745e-002, -1.760694e-002, 3.087543e-002, 7.014171e-003, -1.139586e-002, -7.241997e-003, -2.217545e-002, -1.780514e-002, -1.115287e-003, -2.908005e-002, 4.450499e-002, 9.779315e-003, 1.538642e-002, 7.567519e-003, -1.326031e-002, 5.113869e-002, 4.782022e-002, -1.683142e-002, -1.557559e-003, 2.527104e-002, -6.993749e-002, -3.478678e-002, 2.947377e-002, 3.161912e-002, -3.423768e-005, -2.908339e-002, -6.876863e-003, 3.491455e-003, -3.874714e-003, 6.407896e-003, 2.505857e-002, 1.714210e-002, 3.037632e-002, -1.345892e-002, -6.546543e-003, -4.322773e-002, 1.478067e-002, 1.023668e-002, -4.171607e-002, 3.503453e-002, 1.751300e-002, 4.083713e-002, -2.828274e-003, -6.514324e-002, 4.103467e-002, 1.173809e-004, -4.380293e-002, 2.300899e-002, -9.667912e-003, 7.982389e-003, 1.564071e-002, -1.466293e-002, 1.017336e-003, -1.221961e-002, -1.948775e-003, 1.462290e-003, 1.812239e-002, -2.858767e-002, 2.757588e-002, -2.810365e-002, -4.281385e-002, 6.838389e-002, -1.981716e-002, 2.037836e-002, -5.681812e-002, -2.436373e-002, 7.025630e-002, -3.649345e-002, -2.201387e-002, 2.329666e-002, -3.610698e-002, 3.997460e-002, 8.542244e-003, -2.076813e-002, 8.889895e-003, -9.731139e-003, 7.368339e-003, -6.074382e-004, -2.516391e-003, -5.898178e-003, 3.127218e-002, -7.382332e-003, 2.596222e-002, -1.872660e-003, -4.475239e-002, 4.643515e-002, -1.491072e-002, -1.525968e-002, 3.509501e-002, -1.878771e-002, 3.654876e-002, -1.523199e-002, -2.446016e-002, 2.025054e-002, -3.235983e-002, 1.088789e-002, 3.829896e-002, -1.011406e-002, -2.522123e-003, -2.762739e-003, -4.827436e-003, 1.006879e-002, 3.389927e-003, -2.512032e-002, 1.126517e-002, 2.607797e-002, -6.760506e-002, 4.129403e-002, 9.759224e-003, -2.856781e-002, -3.860644e-002, 2.281818e-002, -2.533810e-003, -3.450414e-002, 3.391635e-002, -2.298935e-002, -3.946748e-002, 2.723351e-002, 1.641837e-002, -1.486381e-002, 4.536128e-004, -1.257392e-002, -5.158412e-003, -1.524047e-002, -9.090446e-003, 2.210431e-002, 1.283637e-002, -3.194488e-002, -1.046963e-002, 5.351423e-002, -3.625957e-002, -3.894736e-003, 4.088660e-002, -1.304351e-002, 1.006524e-002, 1.009238e-003, 1.493458e-002, -3.343970e-002, -8.936981e-003, 7.729137e-003, -9.460719e-003, -9.623296e-003, 4.197887e-003, -3.869386e-003, 4.798849e-003, 2.186535e-003, -1.001916e-002, -8.732863e-004, -3.842865e-003, -1.353608e-002, 8.038811e-003, 1.324508e-002, -2.017894e-002, 4.561792e-003, 3.619095e-002, -1.736982e-002, 1.273958e-002, 1.177203e-002, -1.296485e-002, 1.400854e-002, -1.871883e-002, 7.417411e-003, -8.477860e-003, -6.369508e-003, 5.599564e-003, -1.935109e-003, 3.414675e-003, -9.446753e-003, -1.144927e-002, -2.270438e-003, -1.086362e-002, 6.151481e-003, -1.642269e-003, -1.649262e-002, 3.323776e-002, -1.217209e-002, -1.341333e-003, 1.767954e-002, -1.647601e-002, -5.466838e-018, -1.364609e-002, 1.749448e-002, -4.233396e-003, 6.856224e-003, 1.427732e-003, -4.019519e-003, -1.786668e-003, 2.221071e-002, 1.395241e-002, -3.753208e-002, 4.736640e-002, -4.736640e-002, 3.753208e-002, -1.395241e-002, -2.221071e-002, 1.786668e-003, 4.019519e-003, -1.427732e-003, -6.856224e-003, 4.233396e-003, -1.749448e-002, 1.364609e-002, 7.043941e-002, -3.019244e-003, -5.977666e-002, 1.039148e-001, -2.281437e-002, 6.169671e-003, -1.206874e-002, 1.472217e-002, 6.076050e-002, -5.430746e-003, 7.642173e-002, 4.291576e-002, 4.353856e-002, -2.224444e-002, -5.961793e-003, 3.001298e-002, 5.259963e-002, -4.626544e-002, 4.148951e-002, -3.861203e-002, 1.134392e-001, -7.942929e-002, 4.614344e-002, -2.412250e-002, -1.891010e-002, -7.841258e-002, 1.412110e-001, -1.902876e-001, 6.382558e-002, 1.137136e-002, -4.591296e-002, -6.081679e-002, 2.044550e-002, -3.089199e-002, -5.536873e-003, 6.336353e-003, 2.339465e-002, 9.984833e-003, -2.645198e-003, -4.116613e-002, 1.426720e-002, 1.073699e-001, -1.017006e-001, 1.076225e-001, -1.991168e-003, 2.568104e-002, -8.375692e-002, 5.698216e-002, -3.935666e-002, -8.738369e-004, 8.110073e-002, -3.357708e-003, 9.218094e-003, 2.017976e-002, 4.462958e-002, -4.218000e-003, -1.174058e-002, -2.034745e-002, -3.219535e-002, -3.822624e-002, -2.181758e-002, -1.589003e-003, 1.484201e-003, 1.979279e-002, -3.540222e-002, 7.214237e-002, -5.980025e-002, 4.272933e-002, 2.209705e-002, -1.000528e-001, 9.066590e-002, -1.655297e-001, 7.454573e-002, 5.715816e-002, -7.163266e-002, 7.222635e-004, 2.216909e-002, 1.012966e-002, -1.719832e-002, -2.033425e-002, -2.031124e-002, 2.526719e-003, 1.650680e-002, 2.573256e-002, 2.191699e-002, 3.422118e-002, -3.690558e-002, -7.697943e-002, 3.622774e-002, 1.107168e-001, -7.087489e-002, 1.737698e-002, -4.351298e-002, 1.310101e-002, 1.638241e-001, -6.022008e-002, -8.478681e-002, 6.967459e-002, 1.966543e-002, -3.333488e-002, -2.496506e-002, 2.083430e-002, 1.703395e-002, 1.671605e-002, -2.437121e-002, -1.074244e-002, 1.655273e-002, 2.632099e-002, -1.089204e-002, 4.255228e-002, 5.034334e-002, -7.639804e-002, -6.908275e-002, 7.158550e-002, -2.789451e-002, 1.680446e-001, -1.103156e-001, -4.556643e-002, 5.280751e-002, 1.943144e-002, 2.300445e-002, 2.629454e-002, 1.720478e-002, 1.646803e-002, -1.431213e-002, -1.464293e-003, -3.676908e-002, -1.947011e-002, -2.854674e-002, 6.376790e-003, 5.056612e-002, 2.389503e-002, 1.755988e-002, 2.346124e-002, 2.848771e-002, 7.449917e-002, -1.173935e-001, -1.630537e-001, -1.179958e-001, 5.876610e-002, 5.169874e-002, -2.676321e-002, 9.813194e-002, -5.740562e-003, -2.933705e-002, -2.245582e-002, -2.225336e-002, 3.237111e-002, -1.808769e-002, -5.961358e-003, -6.177725e-003, -2.844399e-002, 7.792036e-003, -5.977124e-004, 9.987684e-003, -3.514156e-003, -2.182842e-002, 5.232623e-002, -1.619230e-002,


© ISO/IEC 2004 — All rights reserved
--`,,```,,,,````-`-`,,`,,`,`,,`---

Copyright International Organization for Standardization
Provided by IHS under license with ISO
No reproduction or networking permitted without license from IHS
Not for Resale

2.960756e-002, 8.490572e-002, 2.953744e-002, -8.595424e-002, 3.840269e-002, 2.493807e-002, -1.973382e-002, -1.519182e-002, -1.437450e-003, 3.382419e-003, 2.694922e-002, -2.899809e-002, 1.036563e-002, 1.853511e-002, 1.468548e-002, 1.505320e-002, -4.011484e-002, 3.419302e-002, 2.236065e-002, -1.999451e-002, 6.467344e-003, -1.314261e-002, 3.730601e-003, 4.946688e-002, -9.778568e-003, -6.308085e-002, 4.895573e-002, -1.519199e-002, -4.236926e-002, 2.490418e-002, -1.413752e-002, 4.131597e-002, 6.574307e-003, -1.179106e-002, 2.988292e-002, -1.514499e-003, -1.118545e-002, 1.765204e-002, -1.206408e-003, 2.502977e-002, -2.626967e-002, -9.959925e-003, 5.125535e-002, -6.968908e-003, 1.645274e-002, -3.732913e-002, 3.368511e-002, 3.890535e-002, 6.460195e-002, -1.721824e-002, -3.584562e-002, 5.858005e-002, -4.518789e-002, 3.174858e-003, -1.747320e-002, 8.137667e-003, 3.091526e-002, -9.829602e-003, -1.201271e-002, -6.771727e-005, -8.185419e-003, 6.893770e-003, -3.091270e-002, 1.652288e-002, 1.014619e-002, -1.204238e-002, 2.343989e-002, -1.668969e-002, 4.445057e-002, -4.273076e-002, -2.123783e-002, -4.529062e-002, 9.382222e-003, 3.332527e-002, -1.197416e-002, 1.212257e-002, -1.105293e-002, 6.003132e-003, 1.908470e-002, 3.672379e-003, -3.778458e-003, 4.890187e-003, -7.554626e-004, 1.752733e-002, -9.398240e-003, -5.497625e-003, -2.395471e-003, 2.095401e-002, -1.701319e-003, -1.622885e-002, 6.722399e-003, -4.391133e-002, 3.425645e-002, -5.804543e-003, 3.061732e-003, 1.408880e-002, -1.608061e-002, 2.096829e-002, -3.356422e-002, -4.688026e-003, 2.630699e-002, 3.347206e-003, 2.211241e-003, 1.311103e-002, -9.403331e-003, -1.455389e-002, 8.536095e-004, 2.735972e-003, -3.366840e-003, 1.115318e-003, -1.330769e-002, 1.807123e-002, -7.651312e-003, -2.230637e-002, 8.199801e-003, 1.136860e-002, -1.283642e-002, -1.635420e-002, 1.046137e-002, -1.153219e-003, -1.780653e-002, 1.275599e-002, 3.879871e-003, -3.021099e-002, 9.468736e-003, 8.193253e-003, -7.482449e-003, -1.400261e-004, 6.747109e-004, 4.609965e-003, 4.321376e-003, -1.146919e-002, -2.812737e-003, 1.308959e-002, -1.872666e-002, -7.413371e-003, 3.511322e-002, -1.609508e-002, -1.838847e-002, 2.748393e-002},
{1.231377e-002, -8.430713e-003, -1.147947e-002, 6.869984e-002, -9.988452e-002, 9.286438e-002, -1.537029e-003, 2.769515e-003, 2.007916e-002, 5.519045e-003, 1.895814e-002, -2.949194e-002, -2.949194e-002, 1.895814e-002, 5.519045e-003, 2.007916e-002, 2.769515e-003, -1.537029e-003, 9.286438e-002, -9.988452e-002, 6.869984e-002, -1.147947e-002, -8.430713e-003, -1.639037e-002, -3.101737e-002, -1.319135e-003, -3.631505e-002, 3.536684e-002, -3.483251e-002, 3.244189e-002, 3.153442e-002, 1.776123e-002, -1.882903e-002, -1.386579e-002, 3.226385e-002, 2.765525e-003, -2.669309e-002, -2.979176e-003, 8.261926e-003, 1.551463e-002, 6.637406e-003, -3.126099e-002, 4.772132e-002, 1.423329e-002, -6.295909e-002, 2.078488e-002, 8.476302e-002, 9.173715e-002, 7.972969e-002, -1.607738e-001, 7.780967e-002, -4.488710e-002, 5.256777e-002, 6.067207e-003, 2.288560e-002, 2.018372e-002, 1.009520e-002, 8.973919e-003, -3.665273e-002, 1.227314e-002, 1.594638e-002, 1.258710e-003, -3.492092e-002, 2.032103e-002, -1.832844e-002, 8.120116e-002, -1.791840e-001, 7.572908e-002, 7.233983e-002, -9.326285e-002, 1.119636e-001, -1.497257e-001, 6.045964e-002, -2.486151e-002, 4.054536e-002, -9.556595e-002, 1.502983e-002, -1.943517e-002, -3.579823e-003, 8.689282e-003, 5.883255e-003, -2.175770e-002, -2.745012e-002, 1.041696e-002, -2.818787e-002, 4.019364e-002, -9.911065e-003, 5.241564e-002, -8.303884e-002, 4.387076e-002, -2.089316e-002, 9.293019e-003, 4.874520e-002, -2.804193e-002, 6.968389e-002, 7.908128e-002, -7.369587e-002, -2.073853e-002, 1.320210e-001, -1.670640e-002, -2.262595e-002, -1.116804e-002, 3.823168e-002, 5.305772e-002, 2.794598e-002, 1.289752e-002, -1.582422e-002, -1.045956e-002, -3.478525e-002, 3.024127e-002, -5.945426e-002, -4.054304e-002, 8.562693e-002, 8.574209e-002, -4.537004e-002, 1.138682e-001, -9.325552e-002, 1.103977e-001, -5.918021e-002, 9.371130e-002, 4.349253e-002, -3.456655e-002, 2.306698e-002, -1.234769e-002, 7.033041e-003, -1.205463e-002, -6.223336e-002, -7.900218e-003, 5.044877e-003, 2.295166e-002, 1.436032e-002, 4.024201e-002, -1.541592e-002, 6.082082e-002, 5.491830e-002, -3.940015e-002, 3.151848e-002, 3.075538e-002, -6.029685e-002, 9.139323e-004, 8.517080e-003, 2.088200e-002, -9.065331e-002, 3.002721e-003, 2.329417e-002, -1.027583e-002, -7.900489e-003, -2.387717e-003, -2.409706e-002, 5.725662e-003, 1.607417e-002, -1.452601e-002, -1.297617e-002, 1.089624e-002, -7.039923e-003, 1.517478e-002, -1.208499e-002, -3.004803e-002, 1.738605e-003, 1.982963e-002, 1.699943e-002, -4.079507e-002, 1.645015e-001, -1.049530e-001, 8.600517e-003, 3.367505e-002, -4.826250e-002, 9.383009e-003, -1.317522e-002, -1.687769e-002, -2.058366e-002, 1.674072e-002, 2.498175e-003, 1.278850e-002, 2.956635e-002, -9.265835e-003, -3.141357e-002, 1.714593e-002, -1.031454e-002, -2.511520e-002, 3.026157e-002, -2.461348e-002, -1.359130e-002, 1.042066e-001, 4.845388e-002, 6.835320e-003, -2.057307e-002, 2.880999e-002, -4.148557e-002, 2.141295e-002, -4.570741e-003, 7.245598e-004, -7.000525e-003, 1.407742e-002, 6.438407e-003, 1.612788e-003, 1.156157e-002, 1.219845e-002, 7.695196e-003, -8.221706e-003, -2.033669e-002, 1.349181e-003, 3.783223e-002, -4.265461e-002, 2.271319e-002, -1.024551e-002, 1.679205e-003, 4.365959e-002, -5.202609e-002, 4.227317e-002, 2.402075e-003, -3.579181e-002, -6.602484e-003, 2.438823e-002, 2.094002e-003, 1.556833e-002, -4.790799e-003, -1.751529e-002, -1.813859e-002, -1.210887e-002, -1.215453e-002, -1.143430e-002, 4.900043e-003, 3.296624e-003, 1.276613e-002, -1.931152e-002, 2.566693e-002, -2.448708e-002, 2.356206e-002, 1.244181e-002, 2.304577e-002, 6.289941e-003, -3.151524e-002, 5.311109e-003, 8.001006e-003, 8.759998e-003, 2.326019e-002, 7.013734e-003, -1.434560e-002, -4.143880e-003, -

© ISO/IEC 2004 — All rights reserved


Copyright International Organization for Standardization
Provided by IHS under license with ISO
No reproduction or networking permitted without license from IHS
Not for Resale

2.546401e-003, -4.276924e-003, 6.648425e-003, -3.066363e-003, -5.830212e-003, -1.789121e-002, 1.064271e-002, 2.850515e-002, -1.352945e-002, -1.305552e-002, 2.407057e-003, 1.283480e-002, -2.742857e-002, -5.798252e-002, 4.367140e-002, -2.434219e-002, -5.301619e-003, -9.616088e-003, 5.861118e-003, 4.913839e-003, -9.775920e-003, 3.946006e-003, -1.956652e-003, -1.144459e-003, -2.285174e-003, -1.687618e-003, -7.551765e-004, -3.472399e-003, 1.094821e-002, 8.993663e-003, -3.121759e-003, 4.372450e-004, -2.116547e-002, -6.712926e-003, -2.386775e-002, 6.478672e-002, -8.358058e-003, -2.303470e-002, 1.612880e-002, -3.281705e-002, 1.219577e-002, 1.086572e-002, -1.083819e-002, -4.011038e-003, -1.246335e-002, -5.668262e-003, -1.037183e-002, 8.290670e-003, 4.925359e-004, 1.660878e-003, 2.429983e-003, 9.616359e-004, 1.614227e-004, -4.083722e-003, -1.211518e-002, -1.401352e-003, 4.083105e-003, -4.612583e-003, 4.411876e-002, 1.432861e-002, 2.236190e-002, -5.455743e-002, 3.142342e-002, -1.950538e-002, 2.727663e-004, 2.068180e-002, -1.444125e-003, -9.071771e-003, -4.784007e-003, 7.086111e-003, -3.855330e-003, 2.215966e-004, 9.163998e-003, 1.016554e-002, -6.078228e-003, -1.415832e-003, 1.225916e-002, -1.927202e-002, -2.838779e-002, 3.327372e-002, -2.133204e-002, 7.270676e-003, -3.868444e-017, 6.436016e-004, 1.650395e-003, -8.648572e-004, 9.530141e-004, 1.502311e-002, -2.081815e-002, 2.295872e-002, -1.801147e-002, 1.991045e-002, 6.038357e-003, -1.714593e-002, 1.714593e-002, -6.038357e-003, -1.991045e-002, 1.801147e-002, -2.295872e-002, 2.081815e-002, -1.502311e-002, -9.530141e-004, 8.648572e-004, -1.650395e-003, -6.436016e-004, 3.322017e-002, 3.220929e-002, 6.018754e-002, -1.389952e-001, 1.436072e-001, -3.766960e-002, -7.436235e-003, 3.783530e-002, 1.539391e-003, 1.845831e-003, 2.425756e-002, 6.639212e-002, 4.372732e-002, -1.454157e-002, -1.009298e-002, -2.403759e-002, 6.415455e-003, -7.991167e-002, -2.897163e-003, 1.077726e-001, -1.091222e-001, 3.744602e-002, 3.866832e-002, -3.346143e-002, -1.610756e-002, 4.532553e-002, 4.458184e-002, -1.080226e-001, 7.920456e-002, -3.510098e-002, -1.589798e-003, 4.280883e-002, 2.583080e-002, 3.053958e-002, -3.751438e-002, 1.148577e-002, 6.361107e-002, 4.251556e-003, 2.913457e-002, -2.523792e-002, -6.786499e-002, 1.004705e-001, -1.585884e-001, 7.145794e-002, 9.242032e-002, -6.939995e-002, -6.921623e-002, 4.273716e-002, 2.005967e-002, 7.368720e-002, -1.709221e-002, -5.339514e-002, 6.696791e-002, -2.416376e-002, -1.215186e-002, 5.055779e-002, -1.259868e-002, 2.921316e-002, 1.686602e-002, -1.171874e-002, 3.158194e-002, -2.524567e-002, -1.288489e-002, 3.990659e-003, -7.906022e-002, 3.261120e-002, 5.559627e-002, 4.368690e-002, 4.338611e-002, 1.803080e-001, -2.008860e-001, 5.980294e-002, -4.344579e-003, 3.848625e-002, 2.199475e-002, -3.417256e-002, -1.678892e-002, 2.723910e-002, -3.559841e-002, -9.538079e-003, -3.688095e-002, -4.275935e-002, 2.308851e-002, 1.041745e-002, 3.210429e-002, 1.077307e-003, -8.126144e-003, -2.244096e-003, 5.972225e-002, 2.738155e-002, -2.664029e-002, -9.925090e-002, -4.691591e-002, 1.407655e-001, 3.936695e-002, -4.217461e-002, -4.506521e-002, 7.696050e-002, -1.984601e-002, -1.315599e-002, -1.884266e-003, 3.281971e-002, -5.038291e-003, 1.704124e-002, -3.278971e-003, -1.220075e-002, 1.018799e-002, -2.425664e-002, -3.223278e-002, -6.897551e-003, 4.506374e-002, -4.541045e-002, -2.152507e-003, 9.975297e-003, 3.073233e-002, -4.237494e-002, 3.597989e-002, -5.285477e-002, 1.213451e-002, 3.622801e-002, -2.649596e-002, 1.972220e-002, -1.998180e-002, 6.576646e-003, -3.471044e-002, -1.182517e-002, -2.020935e-002, -1.970197e-002, 1.065011e-002, 8.183974e-003, 3.925878e-002, 7.260625e-003, -2.172526e-002, -2.790211e-002, -2.367633e-004, -1.499990e-002, 5.265620e-002, -9.492626e-002, 2.969358e-002, 3.996913e-002, -8.677083e-002, -5.128125e-003, 1.844112e-002, 2.394514e-002, -4.970746e-003, 1.359033e-002, 5.264562e-005, 6.949786e-003, 6.533586e-003, -7.197691e-003, -8.878422e-003, -2.119156e-002, 2.608040e-002, 2.123684e-003, 4.836457e-003, 1.138613e-002, 1.502760e-002, 2.422903e-002, -7.721013e-003, -3.206393e-002, 8.000118e-003, 5.892769e-002, -9.418660e-002, 5.604969e-002, 6.699770e-002, -4.215671e-002, 2.028750e-002, 1.393569e-002, -2.238233e-002, -1.082608e-002, -3.324945e-003, 2.097699e-003, 7.436420e-003, 6.674044e-003, 5.962956e-003, -5.809333e-003, 1.986808e-002, -1.250611e-002, -3.021170e-002, 1.054840e-003, -1.567529e-002, 1.103190e-002, -2.738920e-002, -3.960564e-002, -1.508494e-002, 6.805932e-003, 4.806092e-003, -7.474891e-003, -1.894538e-002, 2.611890e-002, -2.479680e-003, 1.572217e-002, 1.284096e-005, -1.289974e-002, -3.049751e-003, -2.221853e-004, 4.322927e-003, -9.989592e-004, -4.017432e-005, -8.510929e-003, 1.054899e-002, -2.023355e-002, 1.172420e-002, -1.539448e-002, 3.756790e-002, 2.752998e-003, 1.560157e-002, -6.746185e-003, 5.988282e-003, 1.005255e-002, 1.745042e-002, -2.491343e-003, 9.075409e-003, 1.466258e-002, -1.541716e-002, -1.178416e-002, -3.968835e-003, -9.144149e-003, -1.448268e-003, -1.968064e-004, 5.059349e-003, -7.250601e-003, -1.790596e-004, -1.610302e-002, 2.136366e-002, 1.177123e-002, -2.198716e-002, 2.456987e-002, -1.061025e-002, -3.064072e-002, -8.846938e-002, 1.220833e-002, 4.976833e-002, -3.168247e-002, 2.638681e-002, 1.745302e-002, -2.700528e-002, -3.980985e-003, -1.667622e-003, -3.022446e-003, 3.417937e-004, 2.033505e-003, 5.416718e-003, -3.398621e-003, 6.592412e-003, -4.729654e-003, 1.046781e-002, 1.264271e-002, 8.367708e-003, 2.553949e-002, -4.274640e-002, 1.528998e-002, 4.823799e-002, 8.385423e-003, -4.011144e-003, -2.037401e-002, 2.388036e-002, -1.497014e-002, 1.379656e-002, -6.164924e-003, -2.550425e-003, 8.132536e-003, -7.529538e-004, 1.267764e-002, 4.684082e-003, 5.516618e-003, 6.078746e-003, -2.592658e-003, 6.633380e-003, 4.083043e-003, 7.708929e-003, 1.237826e-002, -3.638628e-002, 3.728505e-002, -1.987434e-002, -2.489463e-002, -4.045165e-002, 1.344156e-002, -5.906655e-003,


© ISO/IEC 2004 — All rights reserved

Copyright International Organization for Standardization
Provided by IHS under license with ISO
No reproduction or networking permitted without license from IHS
Not for Resale

1.149263e-003, 2.266467e-002, -1.039818e-002, -1.760943e-003, -1.875521e-002, -5.792659e-004, 1.070146e-002, 1.075400e-002, -3.194803e-003, -1.276487e-003, -4.466839e-003, 4.101277e-003, 1.285235e-002, -4.241892e-003, 3.425515e-003, 1.773919e-002, -1.871381e-002, -4.911876e-003, 1.621867e-002, -6.467245e-003},
{1.931078e-003, 2.086838e-003, 1.722638e-002, -4.817608e-002, 3.700434e-002, -1.079810e-002, -2.980930e-002, 3.569147e-002, -2.386374e-002, -1.316351e-002, 3.822612e-003, 6.527156e-003, 6.527156e-003, 3.822612e-003, -1.316351e-002, -2.386374e-002, 3.569147e-002, -2.980930e-002, -1.079810e-002, 3.700434e-002, -4.817608e-002, 1.722638e-002, 2.086838e-003, -2.361123e-002, -8.101404e-004, 7.563967e-002, -1.362680e-001, 1.078687e-001, -1.823010e-002, 4.498826e-003, -3.453414e-002, -3.474098e-002, -2.650116e-002, -1.000450e-003, 1.332601e-002, 2.113020e-003, -2.325330e-002, -2.367757e-002, -6.429134e-003, -5.103453e-002, 2.881958e-002, -2.320121e-002, 5.557602e-002, -7.037935e-002, 2.172298e-002, 2.546209e-002, 6.876208e-003, -6.338763e-002, -3.250876e-002, 7.096556e-003, -4.911887e-002, -1.630985e-002, 6.800802e-002, -4.884615e-002, 1.413237e-002, -1.916941e-002, -9.886379e-003, -3.402555e-002, -2.616350e-002, -1.657052e-002, -8.444291e-003, -4.672460e-002, 4.512171e-003, -1.698875e-002, -2.549541e-002, -4.392479e-002, 5.226101e-002, -1.122076e-001, -2.226692e-002, -1.036410e-001, -1.084440e-002, 5.717636e-003, 8.003490e-002, -1.397372e-001, 9.907371e-002, -2.243237e-002, 3.724410e-002, 5.715963e-003, -3.652907e-003, -3.993808e-002, -3.388282e-003, 1.308076e-002, 2.436049e-003, 3.890563e-003, 1.214064e-002, -1.589337e-003, 2.921959e-002, 1.091088e-001, -1.882611e-001, 8.753110e-002, 1.008179e-001, 3.866003e-002, 8.796174e-002, -5.743393e-002, -3.717489e-003, -1.833863e-002, 4.366913e-002, 2.178399e-002, 5.293391e-004, -6.648531e-003, 2.906724e-002, -2.257759e-002, 4.574822e-003, 9.370149e-003, -8.962657e-003, -5.849307e-003, -1.859716e-002, 1.699096e-003, -2.295071e-002, -2.755945e-002, -9.321892e-003, 5.131402e-002, -3.586872e-002, -9.464289e-002, -1.722620e-002, -9.278308e-003, 3.652961e-002, -5.857201e-002, 2.148288e-002, 9.239653e-002, -7.919953e-002, -5.189265e-003, 3.288353e-002, -6.337555e-002, -2.446363e-002, 6.456803e-003, 2.988573e-002, 3.589824e-002, 6.150940e-003, -5.375674e-002, -5.023443e-002, 6.155930e-002, -3.157823e-002, -3.772490e-002, 5.112487e-002, 3.846128e-002, -1.514813e-002, -1.082124e-002, 4.329352e-002, 7.074795e-002, -3.573565e-002, 1.300045e-001, -1.133047e-001, 9.217619e-002, 3.546457e-002, -8.653398e-003, -3.362731e-002, 1.678229e-002, 3.307504e-002, 1.829143e-003, -2.706181e-002, 1.747619e-002, -2.089157e-003, 1.157197e-002, -1.833759e-002, 7.231357e-002, 5.717967e-002, -1.149985e-001, 7.440841e-002, -3.821051e-003, -2.138811e-002, -1.722757e-001, -4.485418e-002, 1.311662e-001, -9.374611e-002, 4.474262e-002, -2.671534e-002, -9.131523e-003, -2.986738e-002, 3.171486e-002, 2.893253e-002, 7.464508e-003, -9.067416e-003, 9.497059e-003, -1.614698e-002, -4.156372e-003, -1.417784e-002, 2.344832e-002, -2.326797e-002, -3.972776e-002, 1.191566e-001, -9.966113e-002, 1.173346e-001, 2.164595e-002, 3.335969e-002, -8.343513e-004, -1.060849e-002, -6.428290e-003, 3.949681e-002, -2.430576e-002, -2.111421e-002, 1.662022e-002, 4.450337e-003, 9.011204e-003, -3.958494e-003, -2.354191e-002, -1.940250e-004, 2.650093e-002, -2.515829e-003, -1.551479e-003, 1.802377e-002, -2.691299e-002, -4.497224e-002, -5.015025e-003, 1.369665e-002, -5.578323e-002, 4.814969e-004, 1.416116e-002, -1.958082e-002, 8.978443e-003, 3.738536e-003, -3.675456e-002, 1.094745e-002, 1.611919e-002, -2.783894e-002, 2.554023e-003, 3.134509e-003, -1.255350e-002, 6.272859e-003, 1.149910e-002, -1.309973e-003, 9.388763e-003, -9.485675e-003, -3.174193e-002, 3.195036e-002, -3.783671e-003, -3.541608e-002, 1.963405e-002, -3.843174e-003, -3.904329e-003, 4.591363e-002, -2.686806e-002, 2.010356e-002, -3.347023e-002, 1.451349e-002, -5.577095e-003, -1.039257e-002, -4.172535e-003, -1.007967e-002, -1.808805e-002, -3.396426e-003, -3.505457e-003, 9.975619e-003, 4.691347e-003, -1.675927e-002, -2.749417e-002, -2.089351e-002, -9.164699e-003, -2.758845e-004, 7.602083e-004, 1.338350e-003, 2.949697e-002, -5.206626e-002, -1.942487e-002, 2.510615e-002, -1.724240e-002, -9.749015e-003, 4.633193e-003, -3.873832e-003, 5.807303e-003, 6.975262e-003, -3.262424e-002, 6.288027e-004, 9.755184e-003, 4.495020e-003, 3.906275e-003, 1.140077e-002, 7.673813e-003, -2.183558e-002, -8.257556e-003, 1.660764e-002, 1.049068e-003, -6.936554e-003, 1.147073e-002, -1.060643e-002, 6.251190e-003, -2.648978e-002, 7.249362e-003, 4.688750e-002, -3.190369e-002, -8.942493e-003, 7.891121e-003, 3.044798e-003, -1.412321e-002, 5.562186e-003, 3.376367e-003, -1.001934e-002, -2.701177e-003, -3.556824e-003, 5.838258e-003, -3.629685e-003, 8.483623e-003, -6.085093e-003, 5.581703e-003, 1.581053e-002, -1.409372e-002, -2.256670e-002, 2.201506e-002, 1.295919e-002, 2.881896e-002, -1.700096e-002, 1.897012e-003, 4.010590e-003, 6.264816e-004, -1.111860e-002, 1.717962e-002, -2.552124e-004, -3.319348e-003, 1.858675e-003, -1.354333e-003, -4.185947e-003, -1.632893e-003, -3.867310e-003, 9.416450e-003, -1.513960e-002, 3.866162e-003, 1.561434e-002, -1.212801e-002, -1.070990e-002, 4.317181e-003, -1.074584e-002, -2.231407e-002, 1.491949e-017, -4.438993e-003, 1.042071e-002, -2.029145e-002, 2.146971e-002, 2.009290e-003, -6.366500e-003, -9.069069e-003, 1.938227e-002, -5.672162e-003, 7.002373e-003, -1.042489e-002, 1.042489e-002, -7.002373e-003, 5.672162e-003, -1.938227e-002, 9.069069e-003, 6.366500e-003, -2.009290e-003, -2.146971e-002, 2.029145e-002, -1.042071e-002, 4.438993e-003, -7.842786e-003, -6.003090e-002, 1.983220e-002, 2.497140e-002, -4.141047e-002, -2.276772e-002, 5.510836e-002, -5.004666e-002, 2.695072e-002, 2.048489e-002, -1.379872e-002, -1.786710e-002, -9.968248e-003, 5.730925e-003, 9.590424e-003, -

© ISO/IEC 2004 — All rights reserved


--`,,```,,,,````-`-`,,`,,`,`,,`---

Copyright International Organization for Standardization
Provided by IHS under license with ISO
No reproduction or networking permitted without license from IHS
Not for Resale

5.913902e-003, -1.796682e-002, 7.824866e-002, -6.575540e-002, -5.259956e-002, 1.233187e-001, -8.243224e-002, 4.171066e-002, -1.444076e-002, 4.216208e-002, -1.391293e-001, 1.386002e-001, -1.385373e-001, 8.573180e-002, -1.120725e-001, 5.367201e-002, -5.064678e-003, 1.443751e-003, 1.216009e-002, 2.225523e-002, 1.399087e-002, 4.095856e-003, -3.231938e-004, -2.043471e-002, 3.088227e-002, -9.801728e-002, 1.200732e-001, -1.546901e-001, 8.400146e-002, -8.318508e-003, -3.926704e-003, 4.161000e-003, 3.470417e-002, -6.020200e-002, 5.442112e-002, -5.466495e-002, 2.572688e-002, 4.148810e-002, -3.599117e-002, 9.754995e-003, -2.349288e-002, -1.351851e-003, 4.256453e-002, 1.622473e-002, 2.248863e-002, 2.498588e-002, 5.343578e-002, -3.230397e-002, -2.001373e-002, -9.945489e-003, -1.704836e-002, 2.328220e-002, 1.340174e-003, -4.334494e-002, 9.600171e-002, -5.645544e-002, -2.474700e-002, 1.517302e-002, 6.703836e-002, -9.809953e-002, -1.360486e-002, 3.689263e-002, 8.168793e-003, -4.736331e-003, 1.832267e-002, 3.514703e-002, 3.299936e-003, 2.859626e-003, 1.747437e-002, -1.739520e-002, 2.170839e-002, -2.425094e-002, -4.337133e-002, 6.915517e-002, -2.154203e-003, -1.195502e-001, -3.798659e-002, -1.571660e-001, 1.592593e-001, -8.480741e-002, -1.775076e-002, -2.707105e-002, 5.997506e-002, 5.250057e-003, 5.218635e-003, 4.215486e-003, 1.792981e-002, 4.221102e-002, 7.953425e-003, 3.923669e-003, 1.573401e-002, -1.547362e-002, -2.422555e-002, -3.374915e-002, -1.538529e-002, 1.096437e-002, -8.884306e-003, -3.470824e-002, 8.268089e-003, 1.057025e-001, -4.516110e-002, -4.940393e-002, 4.143409e-002, -2.457016e-003, -5.057729e-004, 2.410139e-002, 2.821677e-002, -3.808934e-002, 3.364991e-002, 3.403083e-003, -1.807273e-002, -3.877943e-002, 2.588381e-003, 1.987576e-002, 3.464506e-002, 2.840001e-002, -5.909718e-003, 2.415335e-003, -1.307231e-002, 2.122486e-002, -4.351853e-002, 1.496153e-001, 1.307461e-002, 5.908111e-002, -4.985080e-002, -1.176821e-003, -6.662060e-003, 1.269321e-002, -8.141991e-003, -2.408428e-002, 6.830506e-002, 6.557580e-003, -2.371547e-002, -2.209433e-002, -4.272150e-003, 1.326326e-002, -2.283671e-002, -3.481748e-002, -1.580391e-002, 7.518758e-002, 5.685585e-002, -2.417729e-002, 4.463733e-002, 3.958337e-002, -3.828657e-002, -4.227489e-002, 2.173968e-002, -3.084743e-002, -1.907879e-003, 6.087354e-003, -3.082697e-002, 3.995398e-002, 3.610326e-002, 1.992410e-002, -2.111728e-002, 4.274216e-003, 1.114072e-002, 1.355652e-003, -1.097954e-003, 2.069972e-002, 1.777518e-002, -2.883720e-002, 1.320252e-003, 1.755324e-002, 2.840007e-002, -3.855118e-002, 3.046905e-002, -2.148745e-002, -6.218712e-003, -1.007781e-002, -1.043699e-002, 1.195007e-002, -6.636365e-003, 2.569667e-002, -2.082616e-002, -6.317291e-003, -2.541899e-002, 3.278432e-003, -1.129352e-002, 5.427998e-003, 1.137943e-002, 5.961618e-003, 1.092552e-002, 1.278287e-002, 2.062380e-002, -7.020328e-003, -1.035856e-002, -2.843450e-002, 1.756631e-002, -1.687672e-002, 3.235910e-002, -2.729737e-002, -3.495130e-002, 3.841054e-002, -5.296033e-002, 6.631397e-003, 2.593974e-003, 2.293542e-002, -8.257385e-003, 2.536371e-003, -1.167175e-002, 2.748833e-002, 1.544229e-002, 5.864854e-003, -2.298803e-003, 1.454366e-002, 2.209176e-002, -5.045814e-003, -6.288566e-003, -1.308807e-003, -1.181776e-002, -2.518912e-002, 2.895014e-002, -5.210525e-002, 3.505490e-002, -4.635521e-002, -2.019634e-003, -1.192310e-002, -1.054338e-002, 8.314015e-003, 2.370160e-002, -1.702988e-002, -1.875730e-002, -2.383510e-005, 1.040645e-002, 1.326259e-002, 8.010183e-004, -4.248715e-003, -1.773906e-003, 8.946219e-003, 1.865194e-003, -2.190380e-002, -3.585597e-003, 1.495552e-002, 2.400709e-002, 1.448888e-002, -1.407748e-002, 3.424285e-002, 1.198025e-002, 9.477458e-004, -1.644617e-002, 6.455491e-003, -1.280995e-003, 2.738755e-002, -2.069786e-002, -3.322595e-003, 4.807112e-003, 4.014256e-003, 7.703625e-003, -3.858531e-003, -1.208539e-003, 3.172249e-003, 3.778225e-003, 3.504442e-003, -3.085680e-003, -5.375994e-003, 6.129660e-003, 1.191755e-002, 9.157695e-003, -5.015103e-003, -1.793463e-002, -2.025370e-002, 2.652532e-002, -3.830560e-002, -8.871040e-003, 3.004249e-002, -1.313301e-002, 1.365675e-002, 2.545166e-003, -1.059025e-002, 1.244448e-002, -4.924203e-003, 2.510877e-003, -4.182041e-003, -1.202477e-002, 1.345893e-002, 1.328868e-003, -5.585093e-003, 8.024479e-003, 3.078152e-003, 5.532267e-003, 8.232384e-003, -3.260462e-002, 2.267907e-002},

{4.203762e-003, 1.183528e-002, -4.857452e-003, 4.745326e-002, -4.295674e-002, 8.385946e-002, -5.622955e-002, 1.535493e-002, 4.177088e-002, -2.027871e-002, 3.684958e-003, 3.774135e-002, 3.774135e-002, 3.684958e-003, -2.027871e-002, 4.177088e-002, 1.535493e-002, -5.622955e-002, 8.385946e-002, -4.295674e-002, 4.745326e-002, -4.857452e-003, 1.183528e-002, -4.821413e-002, -1.010233e-001, 2.079459e-001, -1.149468e-001, 3.977659e-002, 6.025960e-002, -6.603278e-002, 4.457393e-002, -5.974888e-003, 2.013521e-002, -1.047781e-002, -1.379502e-002, 4.598551e-003, 6.909915e-003, -1.266103e-002, -5.196357e-003, -6.131547e-003, -3.649210e-002, 1.074734e-001, -1.045437e-001, 1.060591e-002, 1.381747e-001, -7.550054e-002, 4.860888e-002, -4.670804e-002, -7.745922e-002, 4.054943e-003, 9.030033e-002, -9.742889e-002, 4.147786e-002, 1.801288e-002, 4.452951e-003, 7.128951e-003, 7.057140e-003, 6.538620e-003, 3.930051e-002, -4.333716e-003, 1.250827e-003, 2.365802e-002, 3.451139e-002, 4.358995e-002, -5.055692e-002, 5.243967e-002, 8.627614e-002, -7.022459e-003, 1.654661e-002, -4.533973e-002, 1.901140e-001, -9.327840e-002, 2.340917e-002, 7.662131e-002, -7.837246e-002, -3.035444e-002, 1.195315e-002, 1.454797e-002, 4.199055e-003, 1.182041e-003, -1.496054e-002, -4.080440e-002, -2.783812e-002, -3.109849e-002, -4.236143e-002, -6.816586e-002, -8.478306e-002, -8.104049e-002, 8.016832e-002, -8.686027e-002, 2.492069e-002, 3.831566e-003, -6.281544e-002, -7.999343e-002, 1.022151e-001, -2.990944e-002,


© ISO/IEC 2004 — All rights reserved

Copyright International Organization for Standardization
Provided by IHS under license with ISO
No reproduction or networking permitted without license from IHS
Not for Resale

2.111426e-002, 7.318997e-002, 5.318309e-002, -4.907871e-002, -3.072757e-002, 1.035613e-002, 2.462982e-002, 1.907374e-002, 3.857729e-003, 3.400276e-003, 3.110921e-002, 1.002576e-002, 7.534631e-003, 2.128543e-002, 3.198371e-002, 2.376888e-002, 4.224603e-002, 8.519061e-002, -1.599553e-001, 5.950890e-003, -9.759081e-002, 8.865748e-002, 3.867216e-002, -1.410144e-002, -1.565162e-002, -1.782305e-002, 3.232485e-003, 3.425353e-002, 6.125084e-003, -1.137956e-004, -4.923804e-003, -3.138180e-002, -5.913054e-002, -5.853419e-002, 4.608509e-003, 1.373579e-002, 1.185792e-002, -1.816907e-002, -3.242606e-002, 6.217947e-002, -4.762193e-002, 3.402586e-002, 2.094564e-002, 5.555510e-003, -5.184086e-002, 1.020552e-002, 3.138037e-002, -2.925168e-002, 2.237536e-002, 2.384910e-002, -1.442659e-002, 1.053210e-002, 2.515561e-002, 1.846812e-002, 1.191679e-002, -4.216411e-003, -5.017138e-003, -1.928374e-002, -4.534733e-003, 1.359024e-002, -4.577138e-002, 1.783906e-002, 2.903730e-002, -1.055011e-001, 3.479725e-002, -4.019840e-002, -2.054892e-002, 4.643198e-002, 1.171592e-001, -1.231222e-002, 3.414525e-002, -1.131880e-002, -2.265290e-002, 2.304737e-002, -7.833605e-004, 1.700125e-002, -2.472373e-003, 3.885466e-003, -9.449327e-003, -1.150084e-002, 1.544897e-002, 1.298096e-002, 1.268865e-002, 1.710859e-002, -7.618463e-002, 1.128335e-001, 1.795569e-002, -8.636213e-002, 1.140112e-003, 1.457788e-002, -3.316256e-002, 4.320240e-002, 4.014422e-002, -1.786128e-002, 6.837586e-003, 1.526175e-002, 3.203772e-003, 1.576615e-002, -7.442971e-003, -1.540567e-002, 1.885775e-002, 9.971268e-003, 6.172731e-004, -8.393384e-003, -4.044128e-003, -1.373238e-002, -3.341058e-003, 4.401578e-003, -4.774331e-003, 9.010750e-002, -4.896756e-002, -4.603411e-002, 3.482741e-002, 4.634653e-003, 1.384707e-002, 3.979233e-003, 7.000785e-003, 4.857537e-003, -5.037068e-003, -1.603340e-002, 8.531252e-004, 2.130256e-003, -8.586667e-005, -2.613542e-004, 1.843392e-002, 1.342015e-002, 7.793818e-003, -3.250272e-002, 9.122619e-003, 4.476698e-002, -1.636941e-003, 1.650504e-003, 5.268604e-003, 3.145841e-002, 4.814173e-002, -3.552989e-002, -6.390327e-003, 4.304673e-002, -2.114725e-003, 1.888806e-002, -2.457972e-002, 9.373880e-004, 1.708615e-002, 9.192838e-004, -1.048519e-003, -3.836838e-003, -2.709374e-003, 5.112234e-003, 2.658673e-003, 2.185875e-002, 8.777572e-003, -5.653455e-002, 2.017073e-002, 3.410931e-002, 2.626600e-002, -3.215802e-002, 5.906351e-003, -2.967927e-003, 3.011324e-002, 1.389046e-002, -1.263908e-002, 3.251521e-002, -2.903242e-002, 2.454831e-002, 1.618656e-002, -1.080886e-003, 1.010606e-002, -4.074472e-003, -8.865169e-003, 6.435876e-003, 1.416714e-002, 2.860463e-003, -1.566968e-002, 3.206266e-003, 5.090794e-003, -6.850216e-003, 4.429683e-002, -2.930683e-002, 3.395748e-002, -3.219032e-002, 8.112753e-003, -5.073942e-004, -1.056472e-003, 1.776078e-002, -3.923490e-003, 1.415544e-002, -1.060140e-002, -3.770910e-003, 1.490814e-002, -1.089996e-004, 6.690154e-003, -5.433720e-003, -3.665535e-003, 1.507693e-002, -3.817272e-005, 1.308499e-003, -5.979258e-003, -1.497231e-002, 2.718449e-002, 1.397080e-003, -5.090765e-003, -1.540807e-002, -1.492279e-002, 6.363486e-002, -3.315491e-002, 2.901656e-006, 7.159311e-003, 2.653739e-003, -1.409376e-002, 6.655301e-003, 1.029438e-003, 2.260595e-003, 8.797316e-003, -8.017921e-003, -9.486465e-004, -2.288954e-003, -2.290000e-003, 7.893624e-003, 2.531868e-003, 1.041574e-002, -1.412337e-004, -1.976935e-002, 2.090982e-002, 3.807012e-003, -4.475087e-002, -1.262698e-002, -5.524547e-018, 5.827981e-003, -2.003644e-003, -1.650861e-002, 2.856645e-002, 1.692540e-002, -3.554697e-002, 1.932087e-002, 1.356403e-002, -2.775752e-002, 1.082382e-002, 2.320724e-002, -2.320724e-002, -1.082382e-002, 2.775752e-002, -1.356403e-002, -1.932087e-002, 3.554697e-002, -1.692540e-002, -2.856645e-002, 1.650861e-002, 2.003644e-003, -5.827981e-003, -3.506501e-003, -4.893800e-002, -3.623352e-003, -1.987982e-003, 4.933934e-002, -3.436650e-002, 1.254521e-002, 3.654349e-002, -1.694824e-002, -1.978407e-002, 1.190805e-002, 4.598506e-002, 3.757030e-002, 4.829695e-002, -2.014310e-002, -2.510759e-002, -1.823135e-002, 8.080136e-003, -7.221486e-002, 9.333371e-003, 6.843161e-003, 3.002013e-002, -1.035608e-001, 9.966896e-002, 1.534876e-001, -1.318862e-001, 7.212358e-002, 3.106253e-002, -1.287475e-002, 4.673667e-002, 1.831495e-002, 1.212319e-002, -3.181061e-002, -2.676897e-002, -1.688718e-002, -4.306933e-003, -2.055662e-002, -2.733689e-002, -6.073416e-003, 5.022793e-003, 2.705917e-004, -1.278151e-002, 5.790956e-002, 2.723238e-002, -7.808600e-002, 6.703304e-002, 2.128847e-002, -2.303710e-004, 1.648942e-002, -5.977007e-002, -4.736438e-002, 3.052470e-002, 1.055945e-002, -3.600269e-002, -3.287854e-003, 3.204563e-003, -2.665676e-002, -1.506445e-002, -1.750481e-002, 1.127326e-002, 6.524428e-002, 3.467964e-002, -1.325794e-002, -3.628906e-003, 3.351665e-002, -2.856849e-003, -5.006379e-002, -9.382068e-003, -8.456967e-002, -1.681031e-001, -5.806861e-002, 3.234678e-002, 3.281662e-002, -4.765999e-002, -3.461097e-002, -1.226063e-002, -2.079673e-002, 1.497323e-002, -1.799708e-002, 7.484206e-004, 2.987254e-002, 5.546926e-004, -4.718164e-002, -6.708306e-002, -8.782398e-003, -8.295310e-004, 5.765181e-002, -5.051791e-003, -2.905571e-002, 8.380801e-002, -1.391433e-001, 6.111451e-002, 1.262264e-001, -2.304574e-002, -5.428471e-002, -3.075181e-002, 3.270351e-002, 1.112280e-001, -4.404929e-002, 5.095979e-002, 2.182169e-002, 4.277152e-003, 6.154432e-003, -9.757693e-004, 2.832079e-002, 2.658447e-002, -1.913129e-002, -2.879655e-002, -3.376905e-002, -8.859605e-002, 1.968414e-002, 8.537126e-003, -2.699624e-002, -7.511096e-002, 1.180833e-001, -1.393219e-001, 1.159140e-001, -4.867864e-002, 2.828222e-002, -9.843581e-003, -2.129862e-002, 7.063921e-002, 1.811725e-003, -1.936563e-002, -8.717968e-004, -1.069812e-002, -1.993868e-003, 8.685177e-003, -5.384584e-003, -1.372623e-002, -4.486040e-002, -1.935853e-002, 7.326227e-002, 1.474873e-002, -1.209995e-002, -

© ISO/IEC 2004 — All rights reserved


Copyright International Organization for Standardization
Provided by IHS under license with ISO
No reproduction or networking permitted without license from IHS
Not for Resale

3.172793e-002, -9.215118e-003, 4.739438e-002, -5.597126e-002, -1.529341e-002, -4.944484e-003, 2.114631e-002, 1.482252e-003, -8.855287e-003, -4.889078e-002, 2.371009e-002, -2.917016e-002, -2.577437e-002, 4.850870e-003, -1.698417e-003, 1.896125e-003, 2.054658e-002, -8.486708e-003, -1.850595e-002, 1.205148e-002, -1.050580e-002, -1.279719e-002, 1.469038e-002, -5.154607e-002, 5.881277e-002, -7.601001e-002, -5.740555e-002, 1.480449e-002, 4.176660e-002, -6.195070e-003, -2.947577e-002, 6.833097e-003, 7.940266e-003, -2.173139e-002, -1.354788e-002, -1.673734e-003, -8.205896e-003, -6.208857e-003, -2.499367e-003, 4.429329e-003, 2.264200e-002, -3.913324e-003, -5.740644e-003, 1.564689e-002, 3.872558e-002, -8.451066e-003, -4.481403e-002, 4.484833e-002, 1.411549e-002, -2.744250e-003, -3.627534e-002, -8.374274e-003, 4.206618e-002, 1.082931e-002, -3.066756e-002, -6.670131e-004, -4.165135e-002, -6.017636e-003, -2.482234e-003, -9.910362e-003, -6.464541e-003, -1.733821e-002, -8.319077e-003, 3.389683e-003, 2.588972e-002, -2.560841e-002, -8.624038e-003, -5.518593e-002, 1.661657e-002, 4.747284e-002, -4.890661e-002, 2.635904e-002, -1.912123e-002, -5.254368e-003, 3.955673e-002, -4.441208e-002, 1.884709e-002, -9.413336e-003, -2.768445e-002, 2.515799e-002, -4.988500e-003, -3.737741e-003, -4.238808e-003, 2.856435e-003, -3.734322e-003, -1.819338e-002, 6.923682e-003, 2.380064e-003, 4.114563e-002, -1.056325e-002, -2.969012e-002, 5.179785e-003, -3.572994e-003, 1.849585e-002, 1.880221e-002, 4.049205e-002, -4.477586e-002, 2.171317e-002, 1.296790e-002, -2.636186e-002, -5.068965e-003, 1.550098e-003, -8.073191e-003, 8.954059e-003, -8.858679e-003, -6.888334e-003, 1.090459e-002, -1.993993e-003, -2.165157e-003, 9.771959e-003, 1.539615e-002, -2.277391e-002, -2.736903e-003, 2.519568e-002, -4.857054e-002, 4.498546e-002, 3.775705e-002, -3.321938e-002, 1.286748e-002, -3.649288e-002, 5.279370e-003, 1.512316e-002, 2.522093e-002, -6.789959e-003, -1.224830e-002, 8.586252e-003, -4.520705e-003, -1.366951e-002, -6.534463e-006, 2.651583e-004, -9.274097e-004, -1.322584e-002, -2.299276e-003, 1.792920e-002, 4.542397e-004, -1.312840e-002, -1.896018e-002, 3.245144e-002, 1.985407e-002, -2.757898e-002, 1.453406e-002, 9.499864e-003, -2.224993e-002, 4.563219e-002, -2.653772e-002, 1.393024e-002, -2.952410e-002, 1.428388e-002, 3.178306e-003, -8.019299e-003, -9.695787e-004, 6.328413e-004, 6.000864e-003, 9.056235e-003, 4.649809e-003, -5.307744e-003, -8.854962e-003, 1.172363e-002, 9.173424e-003, 3.907605e-003, 1.295366e-002, -1.303873e-002, 3.982277e-002, -2.294599e-002},

{-6.956626e-004, 8.173570e-003, 1.740147e-002, -3.191732e-002, 4.725020e-002, -2.942699e-002, -3.855791e-005, -1.673149e-002, 4.375137e-002, -3.643646e-002, -3.078763e-002, 1.210913e-003, 1.210913e-003, -3.078763e-002, -3.643646e-002, 4.375137e-002, -1.673149e-002, -3.855791e-005, -2.942699e-002, 4.725020e-002, -3.191732e-002, 1.740147e-002, 8.173570e-003, -4.290670e-002, -2.668371e-002, 6.185732e-002, 1.149205e-002, 2.263517e-002, -1.805427e-002, 9.132289e-002, 6.539756e-003, -3.153412e-002, 4.001902e-002, 5.006455e-002, 1.745267e-002, -2.102836e-002, 1.087823e-002, 5.641006e-002, 2.520282e-002, 1.791247e-002, 2.339473e-002, -5.845751e-002, 1.059636e-001, -5.594251e-002, 7.883297e-003, 8.624146e-002, -4.369592e-002, 6.355690e-002, -1.932258e-001, 1.493898e-001, -2.599058e-002, 1.758860e-003, -2.180066e-002, 2.312222e-003, 3.532821e-003, -2.126126e-002, -7.326301e-003, -2.771471e-003, 2.132750e-002, 3.031381e-002, 1.780159e-003, -1.441054e-002, 2.445572e-002, 5.615402e-003, 1.452411e-002, 4.447960e-002, 2.523864e-003, -1.746926e-002, -3.760408e-002, 1.245969e-001, 5.399789e-002, -8.753927e-002, 1.226587e-001, -1.731041e-001, 1.479008e-001, 1.356202e-002, 2.037710e-002, -1.117472e-002, -1.858783e-002, 9.699823e-003, 8.514227e-003, 1.841439e-002, 4.374736e-002, 2.909375e-003, -2.284527e-002, 1.214578e-002, 2.851313e-002, 9.592883e-002, -9.420974e-002, -4.234334e-002, 1.696062e-001, -1.185533e-001, 2.335832e-002, 9.156259e-002, -4.845954e-002, -5.236994e-002, 3.498637e-002, -1.509719e-002, -1.346775e-002, -1.616353e-003, -1.194872e-003, 3.678605e-003, -2.993937e-002, -4.782776e-002, -5.338337e-003, -1.025693e-003, -8.402521e-003, -3.034804e-002, -3.476024e-003, -1.989049e-002, -9.183854e-002, 6.865382e-002, -4.397576e-003, -4.884257e-002, 6.855917e-002, 3.294208e-002, -3.586716e-002, 1.439264e-002, 9.571776e-003, -4.869329e-003, 1.507750e-002, -4.345626e-002, 9.468038e-003, -9.781307e-003, -5.933071e-003, -2.226053e-002, -1.994292e-002, 2.143585e-002, 5.116767e-002, 5.237047e-002, 2.075727e-002, 1.599975e-002, -1.348764e-002, -2.213111e-002, -9.508853e-003, 5.881480e-002, -9.710223e-002, 4.063338e-002, 1.611093e-002, -5.276135e-002, 1.214921e-001, -9.527525e-002, 2.940380e-002, -4.766251e-002, -4.401861e-004, -3.897028e-002, -1.102825e-002, -1.189141e-002, -1.509025e-002, 4.251510e-003, -6.137089e-006, -3.953971e-003, 5.196257e-003, 2.016643e-002, 5.663510e-004, 5.075323e-002, -2.473077e-002, 2.512372e-004, -4.951157e-002, 3.772153e-002, -4.284452e-002, -2.497352e-002, 6.724941e-002, -5.975427e-002, -5.525684e-002, -2.941727e-004, -2.246401e-003, -1.878664e-002, 4.759737e-003, -3.889275e-002, -4.210412e-002, 2.114287e-002, -4.139011e-003, -1.370698e-002, 1.966667e-002, 1.024210e-002, -9.371379e-003, 6.655643e-003, -2.182635e-002, 3.533800e-002, 4.008254e-002, -1.075735e-002, -2.259571e-002, 9.705421e-002, 2.201132e-002, -4.935940e-002, -3.788950e-002, 5.659420e-003, 8.249398e-003, -2.130314e-003, 5.683020e-002, -2.339744e-002, -3.834245e-002, 1.017321e-002, -3.055024e-002, 1.227659e-002, 5.366516e-003, -1.633581e-002, 8.436772e-003, 5.776114e-003, -3.773447e-002, 1.750532e-002, -1.066391e-002, 4.269997e-002, 6.284259e-003, 5.879352e-003, -5.748981e-002, -1.748849e-002, 2.588900e-002, 7.836180e-003, -1.971895e-002, 7.497405e-004, -2.708957e-002, -7.272704e-004, 4.196454e-003, 2.832604e-005, -


© ISO/IEC 2004 — All rights reserved

Copyright International Organization for Standardization
Provided by IHS under license with ISO
No reproduction or networking permitted without license from IHS
Not for Resale

1.476488e-002, 1.413016e-002, -2.880916e-002, -2.700294e-003, 4.755391e-003, 8.080920e-003, -4.083597e-003, 2.051227e-002, -6.395319e-003, -2.425603e-002, 3.347655e-002, -3.707641e-002, 2.329060e-002, 4.611108e-002, 7.624784e-002, -2.252368e-002, -2.510711e-002, 8.317229e-002, -7.743040e-002, 3.003098e-002, 3.049734e-002, -9.519154e-003, -3.074059e-003, 7.929414e-003, -2.410671e-002, 1.027373e-002, 6.095956e-004, 7.525646e-004, 1.642804e-002, 3.001821e-002, -1.542250e-002, 9.180811e-005, 7.871369e-003, -4.888454e-002, 3.318611e-002, 9.065362e-003, -2.942860e-002, -3.392825e-002, 3.036601e-002, 1.007829e-003, -3.171173e-002, 2.756520e-002, 2.915904e-002, -1.843848e-002, -3.903542e-003, 2.027075e-002, 9.573638e-003, -1.437869e-002, -1.011906e-002, -1.228246e-002, -1.812409e-002, 1.299097e-002, 2.874418e-002, 4.291261e-003, -3.440689e-002, -3.548484e-002, 2.878435e-002, -2.302297e-002, 1.540891e-002, 1.371750e-002, -1.009808e-003, -3.291459e-002, 5.230225e-003, 3.105624e-002, -6.506597e-003, -6.344266e-003, 1.451805e-002, 1.087558e-002, 3.649550e-003, -8.065734e-003, -8.455144e-003, 1.187359e-002, -4.041184e-003, -3.670643e-003, 9.260444e-003, 6.944209e-003, -2.821932e-003, -3.613850e-003, -2.332770e-002, -1.033185e-002, 4.402168e-002, -1.419758e-002, -3.857772e-003, -6.309588e-002, 3.263609e-002, 1.683621e-002, -1.951796e-002, -1.423347e-002, 3.663559e-002, -4.353351e-003, 1.202224e-002, 3.132855e-003, 4.045193e-004, -4.645408e-003, -4.633353e-003, -2.956895e-003, -4.758595e-003, 1.763556e-003, 1.695907e-002, -7.839247e-003, -2.463517e-002, 1.621730e-002, -2.272745e-003, -6.368108e-003, 1.423896e-002, 1.589698e-002, 2.815110e-017, 8.152292e-003, -2.018232e-002, 2.147960e-002, -2.018012e-002, 7.045128e-003, 6.833502e-003, -1.783163e-002, 1.263382e-002, 5.956148e-004, -3.578832e-003, 1.109867e-002, -1.109867e-002, 3.578832e-003, -5.956148e-004, -1.263382e-002, 1.783163e-002, -6.833502e-003, -7.045128e-003, 2.018012e-002, -2.147960e-002, 2.018232e-002, -8.152292e-003, 5.345753e-003, -3.676739e-002, -3.446643e-002, 7.591864e-002, -8.140108e-002, 9.312522e-002, -3.937863e-002, 1.454905e-003, 1.905595e-002, 2.168049e-002, -2.121740e-002, -1.593228e-002, -1.255980e-002, -4.707566e-002, -2.679451e-002, -1.663489e-003, 6.254433e-003, -5.991503e-002, 5.602823e-002, -5.255613e-002, -1.314853e-002, 1.418742e-002, -4.617290e-002, -9.229302e-002, 1.698231e-001, -1.277643e-001, 9.966303e-002, -9.780000e-002, 5.929959e-002, 3.751270e-002, -1.131242e-002, 3.096018e-002, 4.114949e-002, 3.439636e-002, -8.256054e-003, 2.008013e-002, 1.882910e-002, 9.240253e-003, 2.412312e-003, -5.380859e-002, 3.788913e-002, 4.075998e-002, -1.225735e-001, 2.869800e-002, 6.775533e-002, -2.887224e-002, 5.407764e-002, 5.711953e-002, -2.574751e-002, -4.985487e-003, 6.442005e-003, 2.797084e-002, -4.023987e-002, 1.908360e-002, -2.800347e-002, -1.899570e-002, -6.330411e-003, 2.973392e-002, 7.681041e-003, -2.915671e-003, -1.020005e-002, -1.050147e-002, 2.975099e-002, -4.886917e-003, 1.782189e-002, -3.757942e-003, 1.372166e-001, -1.117635e-001, 5.333067e-002, -1.681120e-003, -8.387377e-002, 2.613355e-001, -1.139854e-001, 8.756058e-002, 1.040990e-002, 3.231869e-002, 4.814260e-002, 4.234594e-002, 5.519611e-003, 3.997250e-002, 1.367306e-002, -2.193381e-002, 3.600681e-002, -1.339610e-002, -8.555768e-004, -1.975754e-002, 2.696629e-002, 2.538142e-002, -2.451903e-002, 3.167092e-002, -1.625890e-002, 7.778670e-002, 6.554830e-003, -6.291705e-002, 1.082952e-001, -6.306016e-002, 7.225740e-002, -2.255353e-002, -9.415442e-003, 2.741743e-002, -1.448157e-002, 2.489883e-002, -2.550781e-003, -1.006992e-002, -1.616514e-002, 8.117090e-003, 2.557923e-002, -1.647286e-002, 5.333048e-003, 3.298801e-002, 2.039855e-002, 4.422906e-002, 4.653178e-003, 4.064953e-002, -5.138824e-002, 1.053584e-001, 6.924336e-002, -7.418479e-002, 8.226262e-002, 2.998504e-002, -3.142564e-002, 3.183251e-002, -2.073831e-002, 1.936283e-002, -1.494904e-002, 2.595911e-003, -1.110434e-002, -6.411708e-003, 1.052881e-003, -8.855314e-003, 1.044470e-002, 2.191350e-002, -1.467559e-002, -9.612233e-004, -4.885289e-002, 2.427765e-002, -4.096634e-002, -1.960552e-002, 2.982408e-002, 5.777044e-002, -7.373392e-003, 6.201059e-002, -3.600320e-002, -1.123745e-002, -1.176984e-002, -3.230912e-002, -3.048531e-002, 4.565143e-002, 1.409252e-002, -3.253628e-003, -6.143921e-003, -2.241181e-002, 4.963820e-003, -3.194370e-002, -2.079649e-002, 3.747516e-002, 4.138827e-003, 1.220681e-002, 1.807177e-002, -4.926208e-002, 1.416210e-002, 5.912700e-002, -1.737671e-002, -1.335575e-002, 2.279346e-002, -4.822199e-002, 4.252404e-002, -4.624919e-002, -2.699926e-002, 3.483343e-002, -4.159983e-003, -2.862197e-003, -1.113364e-002, 3.124884e-004, 3.136940e-002, -1.175293e-002, 8.961516e-003, -2.021317e-002, -7.111501e-002, 1.825502e-002, 2.663355e-002, 5.487076e-003, 2.937919e-002, -3.413545e-003, 1.442922e-002, -1.247823e-002, -4.521544e-003, 1.366132e-002, -1.677019e-002, -1.795456e-002, 2.517045e-002, 5.241876e-003, -4.839385e-002, 1.560633e-002, -1.088067e-002, 7.607333e-003, 3.295032e-003, -8.118989e-003, 2.746081e-002, -6.768282e-003, -2.012620e-003, 2.837029e-002, 4.781789e-003, -1.140606e-002, 1.010638e-002, 1.215275e-002, -2.524752e-003, -1.712233e-002, 7.317481e-002, -1.549093e-002, -1.884772e-002, -1.521258e-002, 3.199825e-002, -2.306267e-002, -1.968911e-002, 1.617992e-002, -2.387563e-002, 1.144096e-003, -1.819707e-002, -8.640033e-003, 6.645548e-003, -2.050073e-002, 2.320623e-002, -4.662852e-003, -8.574338e-003, 1.644376e-002, 7.981530e-003, 1.917944e-006, -6.769843e-003, 4.557492e-002, 4.437439e-002, 7.525374e-003, -9.392139e-003, 2.310863e-003, -2.739743e-004, -9.008307e-003, -1.284421e-002, 1.065507e-002, -1.731052e-002, -2.183162e-002, -1.750781e-002, 8.555371e-003, 1.536644e-002, -1.304559e-002, -3.108832e-003, 7.554267e-003, 4.387638e-002, 7.767518e-003, -2.986330e-002, -8.166351e-004, -7.140570e-004, -2.804741e-003, 3.805075e-002, 2.342369e-002, 6.582255e-003,

© ISO/IEC 2004 — All rights reserved


Copyright International Organization for Standardization
Provided by IHS under license with ISO
No reproduction or networking permitted without license from IHS
Not for Resale

2.659204e-002, -2.238201e-003, -7.612850e-003, 1.195343e-002, 9.767400e-003, -1.145032e-002, -1.520677e-002, -1.007552e-002, 1.193555e-002, -5.612463e-003, 5.142897e-004, 6.589110e-004, -1.357859e-002, 1.290894e-003, 1.183066e-002, 1.565491e-002, 1.523691e-003, -1.033556e-002, -1.502409e-002, 9.288191e-003, 1.805055e-002, 4.661074e-002, 3.616088e-002, -2.812733e-002, -6.249981e-003, 2.529259e-002, -5.561951e-003, -6.469406e-003, -4.305445e-003, -5.169938e-003, 8.639627e-003, -7.323790e-003, -1.042736e-002, 8.857838e-004, -5.198622e-003, -1.336912e-003, 1.024326e-002, 1.287007e-003, -2.559107e-003, -2.430882e-002, -3.749940e-003, 2.382427e-002, -1.259910e-002, 2.271528e-003},
{6.517354e-003, 6.197120e-003, 2.138344e-002, 7.299496e-006, -3.009267e-002, 5.801739e-002, -7.171770e-002, 2.296445e-002, -1.501024e-003, 1.771149e-002, -3.954511e-003, -5.703809e-003, -5.703809e-003, -3.954511e-003, 1.771149e-002, -1.501024e-003, 2.296445e-002, -7.171770e-002, 5.801739e-002, -3.009267e-002, 7.299496e-006, 2.138344e-002, 6.197120e-003, -5.589698e-002, 3.537479e-002, 2.334263e-003, -2.093704e-002, 4.143685e-003, -3.867810e-002, 9.415380e-003, -2.091684e-002, 9.714403e-003, 2.049165e-002, 1.258041e-002, -4.464617e-002, 4.377788e-002, 2.706984e-002, 7.643263e-003, -4.623384e-002, -2.568319e-002, 8.899471e-002, -5.508662e-002, -4.107019e-002, 4.977960e-002, -2.517685e-002, -7.541722e-004, 1.091719e-001, 9.370053e-002, 6.970989e-002, -1.360179e-002, 3.473787e-002, 4.188978e-002, -1.361468e-002, 5.628284e-004, 3.006438e-002, 5.867063e-002, -9.860112e-003, 4.921600e-003, -5.285231e-002, -4.660683e-002, -2.261542e-002, 4.928132e-002, 1.015060e-002, -4.136400e-002, 3.172495e-002, 5.278668e-002, 3.466323e-002, -1.125421e-001, 1.145138e-001, 5.594663e-002, -1.413983e-001, 1.039120e-001, -5.054706e-002, 2.458053e-002, -1.142346e-001, -1.745322e-002, -1.502550e-002, -3.562317e-002, -4.325200e-002, -8.290258e-003, -1.278227e-002, 3.039500e-002, -2.266476e-002, -4.730913e-002, -6.627208e-002, 2.561284e-003, -2.597254e-002, -5.261575e-002, -1.142236e-002, 7.713400e-002, -4.245122e-002, 7.317261e-002, 1.314539e-002, -1.688462e-002, -1.979740e-002, 8.551720e-002, 1.099378e-001, 1.985769e-002, 4.152169e-002, -1.117187e-002, -4.832738e-003, 4.137905e-002, 8.989886e-003, 3.669380e-002, -4.486456e-002, -1.878024e-003, 1.711473e-002, 2.171917e-002, -3.358618e-002, 2.652820e-002, 3.958747e-002, -1.575011e-002, -4.082536e-002, 8.073381e-002, 9.966938e-002, -4.874063e-002, 6.819606e-002, -1.428465e-001, 9.641883e-002, -1.314887e-001, 3.625123e-002, -5.251456e-002, 1.476613e-002, 2.838057e-002, -4.724491e-002, 1.299784e-002, 6.636205e-003, 1.172847e-002, -2.659160e-002, -2.412797e-002, 2.648523e-002, 4.948672e-002, 1.328978e-002, 2.711956e-002, -4.986124e-002, 1.043285e-001, -5.887430e-002, -4.029814e-002, 1.848325e-002, 1.115264e-001, 4.394755e-002, -2.017927e-002, 6.931869e-002, -1.641675e-002, 7.505884e-003, -2.756560e-002, -2.767594e-002, 2.898989e-002, 2.210220e-003, 9.053814e-003, 1.116245e-002, 9.936987e-003, 9.255702e-003, -4.463455e-002, -3.544787e-002, 3.622169e-002, 5.963066e-003, 3.563927e-002, -7.329518e-002, 1.819898e-002, 7.471163e-003, -4.178644e-002, -2.767494e-002, 2.078558e-002, -2.940685e-002, 2.474468e-002, 2.148570e-002, -9.976858e-002, 2.943256e-002, 4.729947e-002, -2.083326e-002, -2.185658e-002, -2.065753e-002, 4.207638e-003, 1.927744e-002, -2.476817e-002, -3.431937e-003, -1.166668e-002, -6.106965e-002, 6.889857e-002, 5.601525e-002, 5.658083e-002, 9.274615e-002, -8.391122e-002, 1.081817e-001, 2.303601e-002, 6.646890e-003, -1.522074e-002, 2.226829e-002, -8.728005e-002, -6.756040e-003, -1.001591e-002, -1.390991e-002, -1.383115e-002, -6.171412e-003, 2.724162e-003, 1.204710e-002, -6.744739e-003, 2.373191e-002, -2.739769e-002, 5.668599e-003, 4.898626e-002, -9.519150e-002, 5.054325e-002, 7.460029e-003, -4.472562e-002, -1.752705e-003, -1.136632e-002, -3.020699e-002, 6.046905e-003, 1.367350e-002, -2.136629e-002, 7.944620e-003, -3.434896e-002, -2.343836e-002, -1.406283e-002, 4.836845e-003, 1.193793e-002, 4.091304e-003, -2.101519e-002, 1.168459e-002, -5.930078e-004, 1.785764e-003, 1.570973e-003, 1.235650e-002, 3.715315e-002, -8.207758e-002, 5.216091e-002, 5.245089e-002, -3.600836e-002, -3.609074e-002, 3.657021e-002, -2.075855e-002, -3.970535e-002, 5.480842e-002, -3.970786e-002, -2.305289e-002, 1.930947e-003, 1.256614e-003, 1.928283e-002, 2.122806e-002, 6.772109e-003, -8.255483e-004, -2.235038e-003, 2.342229e-003, 1.243941e-002, -2.115447e-002, -9.605993e-003, -8.683964e-003, -6.610795e-003, 1.920488e-002, -2.460173e-003, 2.319285e-002, 1.968832e-003, -7.400668e-004, -5.363556e-003, -1.467656e-003, -1.372541e-002, -1.569195e-002, 3.650204e-003, 3.065991e-003, -5.991544e-003, 1.970539e-002, 1.601266e-002, -9.400181e-003, 3.055362e-004, -7.015914e-004, 2.561005e-003, -1.468042e-002, -5.270156e-003, 2.599666e-002, -1.696381e-002, -1.763163e-004, 1.543212e-002, -6.571484e-003, 2.898669e-002, -1.181808e-003, 8.656788e-003, -3.291456e-002, 3.966771e-003, -2.598630e-002, 2.749338e-002, -8.479548e-003, -1.798668e-002, 1.128157e-002, 1.014286e-002, 2.333329e-003, 4.847091e-003, 2.186402e-003, 2.318684e-003, -1.147254e-002, 5.062309e-003, 4.720161e-003, -1.274253e-002, 2.704435e-002, -2.171261e-002, -7.674606e-003, 5.935442e-002, -5.238456e-002, -1.739135e-002, 1.915657e-002, -2.510108e-002, -1.094737e-002, 1.035531e-002, -3.216027e-002, 5.138409e-004, -2.879732e-003, 8.432058e-003, 8.805373e-003, 8.456889e-004, 2.499954e-003, -8.261725e-004, -9.706399e-004, 1.597245e-003, 3.452901e-003, -2.268568e-002, 5.081300e-003, -7.225645e-003, -1.509803e-003, 8.241525e-003, -9.651681e-003, 9.529087e-003, -5.605259e-018, -1.487316e-002, 3.062841e-002, -3.257372e-002, 2.896586e-002, 5.141397e-003, -4.263402e-003, -1.897855e-002, 2.490463e-002, -1.368089e-002, -1.075279e-002, 1.752214e-002, -1.752214e-002, 1.075279e-002,


© ISO/IEC 2004 — All rights reserved

Copyright International Organization for Standardization
Provided by IHS under license with ISO
No reproduction or networking permitted without license from IHS
Not for Resale

1.368089e-002, -2.490463e-002, 1.897855e-002, 4.263402e-003, -5.141397e-003, -2.896586e-002, 3.257372e-002, -3.062841e-002, 1.487316e-002, -2.051976e-002, -1.009524e-001, 1.288970e-001, -1.411611e-001, 1.003222e-001, -9.386632e-002, 6.616111e-003, -4.167991e-002, -9.467081e-002, -7.507752e-003, 1.485716e-002, 2.951536e-003, -1.336885e-002, -1.160554e-002, 1.880831e-002, -3.850587e-002, -5.460764e-002, 4.954414e-002, -4.619257e-002, 8.392211e-002, -9.883597e-002, 7.221935e-002, -1.088871e-002, -1.479342e-003, 2.682146e-002, -8.316513e-003, 7.949496e-002, 6.446630e-002, -8.357457e-003, 5.652166e-002, 5.416854e-002, 7.180076e-002, -6.864996e-003, 2.587297e-002, -1.418478e-003, 1.607190e-002, 1.999795e-002, -4.838426e-002, -2.060345e-002, 4.775610e-002, 5.135259e-002, 1.534970e-002, 4.800069e-002, 2.851540e-002, -3.622529e-002, 1.295702e-001, -4.391688e-002, 7.604619e-003, -1.432215e-001, 1.253404e-001, -6.173688e-002, -9.356433e-003, 7.462596e-002, -2.371388e-002, -2.504634e-002, 2.809950e-002, -5.719195e-002, -4.338648e-002, -5.113256e-003, -4.797071e-003, 3.653075e-002, 1.043720e-002, 2.057779e-002, 8.073639e-002, -5.956647e-003, -2.240122e-002, 6.746834e-002, -3.098679e-002, -3.251535e-002, -9.123706e-002, 4.844175e-002, -1.048568e-001, 2.804494e-002, -5.196440e-003, 3.277380e-002, -1.369896e-002, -4.008742e-002, 4.927871e-002, -8.738499e-003, 1.745801e-002, 1.025308e-002, 1.953239e-002, 2.111050e-002, -2.142401e-002, -8.251816e-004, -3.091471e-003, -3.166524e-002, 7.295372e-002, -1.287409e-002, 2.047088e-002, 8.910047e-002, -3.602084e-002, 1.029672e-001, 5.780621e-002, -1.088803e-002, -5.381456e-002, -2.137315e-002, 2.213642e-002, 5.272811e-003, 2.923529e-002, -2.698279e-002, 4.611453e-004, 5.361907e-003, 3.568415e-003, -1.187556e-002, -1.144312e-002, 7.907243e-003, -3.599530e-002, -1.059476e-002, -2.283962e-004, -5.210713e-002, 9.095725e-002, -1.469114e-001, 5.324444e-002, 1.964121e-002, 5.286780e-002, -8.030749e-002, 2.691689e-002, 6.102910e-002, -3.023533e-002, 4.035940e-002, 4.493432e-003, 2.229889e-002, 2.091566e-002, 1.051219e-002, 1.400947e-002, 1.185430e-002, -1.664267e-002, -1.048479e-002, 9.024660e-003, 3.497324e-002, -2.954050e-003, -1.396761e-004, 5.205708e-002, -6.313633e-002, 1.588413e-002, 2.941248e-002, -5.493079e-002, 6.210502e-002, -1.098816e-002, 6.488789e-003, -7.621117e-003, 3.433596e-002, -1.555342e-002, -8.906802e-003, 4.415649e-002, -1.956420e-002, -2.344370e-002, 8.931210e-003, -3.314748e-003, 1.865931e-003, -1.035201e-002, -2.357122e-002, -9.379782e-004, 3.257093e-002, -1.912304e-002, -2.077295e-002, 1.959922e-002, 7.347993e-002, -3.373026e-002, -4.776010e-002, -5.027509e-002, 1.195460e-001, -3.273139e-002, -2.729365e-002, -5.602288e-004, -9.593377e-003, 3.668963e-002, -1.206107e-002, 6.043718e-003, 1.206960e-002, -3.075732e-003, -1.474755e-002, -4.242894e-003, 3.444531e-003, 1.942754e-002, -3.700938e-002, -3.091168e-002, 5.657489e-002, -5.089559e-003, 1.103029e-002, -1.260475e-002, -1.614570e-002, 7.260750e-002, -3.024231e-002, 9.150267e-002, -6.927021e-002, -1.273881e-003, 8.459472e-003, 1.679360e-002, -3.631619e-002, 1.182481e-002, 3.563179e-002, 2.733384e-003, -5.958678e-003, -5.525314e-003, -7.245325e-003, -8.271472e-003, 3.188649e-003, 5.895198e-003, 5.822446e-003, -1.683046e-002, 5.128900e-002, -3.144896e-003, -1.393537e-003, -1.831846e-002, 7.785213e-003, -1.535720e-003, 6.082088e-002, -4.982975e-002, 3.145030e-002, 2.605815e-002, -2.632490e-002, 2.619811e-002, 3.211527e-003, 1.245446e-002, 8.699875e-003, -4.860552e-003, 2.494029e-003, 2.540835e-003, -1.862465e-002, 3.660629e-003, 1.217481e-002, -2.863210e-002, 4.114766e-002, -1.894160e-002, 1.321441e-002, 1.857403e-002, -5.827641e-002, 6.590351e-002, 1.052221e-002, -7.806083e-003, 4.034809e-003, 5.230528e-003, 6.655701e-003, 2.643780e-002, -2.046815e-002, 8.258085e-003, 1.193181e-002, 3.778203e-003, -1.317882e-003, -1.043078e-002, 1.941348e-003, 1.156454e-003, -6.269751e-003, -1.864425e-002, 6.397895e-003, -1.733238e-002, 2.086763e-002, -9.586212e-005, -5.275894e-004, 4.531314e-002, -3.177800e-004, 1.320187e-002, 2.701058e-002, -5.884378e-002, 2.439867e-002, 8.368758e-003, 9.566841e-003, -5.654923e-003, 1.466882e-002, 1.917547e-002, -1.226000e-003, -9.660331e-003, -4.593447e-003, -3.710647e-003, 1.886027e-003, -5.660372e-003, 1.363425e-002, -1.709304e-002, -1.298052e-003, 2.086262e-002, -9.267880e-003, 8.862375e-003, -6.149340e-003, 1.564883e-002, 1.332434e-002, -1.016064e-002, -3.822770e-004, -4.661232e-003, 2.198948e-002, -4.355094e-003, 1.477163e-002, 1.308752e-002, -2.889556e-003, 5.763035e-004, 1.519051e-003, 5.182745e-003, 4.526053e-003, -2.796336e-004, 1.510660e-003, -1.433931e-002, -6.711256e-003, 1.730087e-002, -5.276891e-003, 3.108119e-002, -1.002798e-002, 5.931156e-003, 1.344014e-002},

{-2.462721e-003, -3.068551e-004, -5.015953e-003, -2.901161e-003, 5.715194e-002, -8.305250e-002, 5.252866e-002, -1.915319e-002, 1.621249e-002, -3.187832e-003, -4.107804e-003, 3.063144e-003, 3.063144e-003, -4.107804e-003, -3.187832e-003, 1.621249e-002, -1.915319e-002, 5.252866e-002, -8.305250e-002, 5.715194e-002, -2.901161e-003, -5.015953e-003, -3.068551e-004, -4.848375e-003, 6.108069e-002, -2.881393e-003, -8.202017e-004, 5.874317e-002, -7.319991e-003, 2.213029e-002, -1.211605e-002, 1.947129e-002, -5.577866e-003, 8.811857e-003, -3.787740e-002, 5.070293e-002, 1.572742e-002, -2.185899e-002, -1.870609e-002, 3.779530e-002, 5.053210e-003, -3.881806e-002, 5.414930e-002, 3.619851e-003, 3.186067e-002, -3.874065e-002, -5.461613e-002, -1.006959e-001, 1.143777e-001, -5.244197e-002, 4.709816e-003, 7.314620e-002, -1.303187e-002, 7.875481e-003, -4.293662e-003, 6.812043e-002, -1.754575e-002, 3.606855e-004, -5.726954e-002, 2.025748e-002, 3.775203e-002, 1.718887e-002, -1.100367e-002, -4.073083e-002, 3.605998e-003, 5.840040e-002, -1.577195e-001, 2.181078e-002, 9.654672e-003, 7.449480e-002, 4.063808e-002, -9.693872e-002,

© ISO/IEC 2004 — All rights reserved


Copyright International Organization for Standardization
Provided by IHS under license with ISO
No reproduction or networking permitted without license from IHS
Not for Resale

2.031294e-002, -2.825307e-002, 2.985462e-002, 2.336596e-002, 9.442899e-003, 4.434031e-002, -1.594430e-002, 3.381299e-002, 2.944889e-002, 3.349762e-002, -7.399148e-003, 1.808537e-002, -1.807199e-002, -1.196833e-002, 4.726056e-002, 1.242908e-002, 1.101278e-002, 1.489931e-002, -1.794123e-002, 5.519522e-002, 2.139192e-002, -4.062988e-004, -3.892711e-003, 4.588317e-002, -6.729468e-002, -4.179427e-002, -3.128860e-002, 1.348984e-002, -1.267432e-002, 1.266177e-002, -1.943989e-002, -1.245638e-002, -2.003004e-004, 5.341457e-003, -3.738419e-002, -2.587315e-002, -2.549307e-003, 1.254922e-002, -1.305787e-002, -4.776422e-002, 1.035989e-001, 1.186832e-001, -1.550118e-001, 4.650672e-002, 1.589367e-001, -1.795229e-002, -3.005772e-002, -1.635732e-002, 4.521929e-002, 2.856032e-002, -2.091123e-002, -4.012650e-002, -8.723440e-003, -2.656899e-003, -1.258203e-002, 1.992762e-002, 1.984803e-002, 4.085422e-002, -1.503533e-002, -3.075038e-002, 2.637751e-002, 3.383969e-002, -7.368688e-002, 4.682451e-003, -1.346481e-001, 1.222544e-001, -6.532306e-002, -3.741661e-003, 3.264969e-002, 3.700805e-005, -2.438400e-002, -2.712331e-002, -5.255204e-002, -3.471436e-003, 3.672252e-002, -6.061008e-003, 4.698334e-003, -1.066095e-002, 9.586145e-003, 1.315903e-002, -2.378004e-002, 2.772762e-002, 1.775790e-002, -3.370634e-002, 1.385830e-002, -5.712826e-003, 1.464091e-002, 5.665055e-002, 3.489399e-002, 1.739001e-002, 3.683143e-002, 5.584561e-003, -6.452370e-002, 5.216420e-002, -4.385542e-003, 4.288249e-002, 3.369561e-002, 1.809548e-002, 5.035909e-002, -3.043305e-003, 1.117546e-003, 3.748069e-004, -4.394366e-003, 1.296455e-002, -3.882708e-003, 1.372156e-003, 8.731319e-004, 1.261060e-002, -3.248333e-002, -5.927479e-002, -6.047514e-002, 7.499632e-003, 7.420083e-002, -6.415360e-002, 7.249456e-003, 1.221368e-002, -1.520342e-002, -6.577299e-003, -2.078867e-002, 3.951531e-002, 1.676423e-002, -5.606553e-003, 1.970084e-002, -1.668502e-002, 1.357392e-003, -3.660506e-003, -2.206893e-002, 7.862742e-004, 1.142634e-002, -1.087437e-003, -1.710058e-002, 1.438480e-002, 1.225029e-002, 1.605600e-002, -6.217337e-002, -3.405107e-002, 3.100228e-002, -1.986987e-002, 2.392927e-002, -3.014631e-002, -2.306065e-002, 4.039093e-002, 2.326564e-003, 2.049641e-002, 2.803263e-002, -7.229247e-003, -1.134833e-002, -1.205809e-003, -2.469377e-003, -2.929587e-004, -1.530532e-002, 1.973311e-002, -2.488197e-002, 9.304194e-003, 2.925169e-002, -5.400155e-002, 2.801123e-002, 1.296762e-002, 4.843669e-002, -1.798153e-002, 5.918540e-003, -6.585771e-003, 6.531920e-003, -5.479712e-003, 3.169919e-003, 1.490570e-002, 7.329616e-003, 1.102531e-003, -1.830736e-002, -2.223814e-002, -6.464954e-003, 2.670121e-003, 1.106650e-002, 1.342079e-002, -2.909110e-003, 1.357265e-002, -2.755341e-003, -1.584748e-002, 2.355433e-002, -5.255427e-002, 1.901922e-002, -4.198555e-002, 6.412640e-003, 1.849659e-002, 9.173897e-003, -1.926930e-002, 2.230580e-002, 1.667827e-003, -1.010214e-002, 2.293916e-002, -4.680773e-003, -1.570859e-002, -5.500934e-003, -3.614004e-004, 2.134066e-003, 2.393083e-003, 6.077670e-003, 1.279534e-002, -1.073839e-002, -6.886826e-004, 1.206103e-002, -2.077509e-002, 2.572192e-002, 1.604476e-002, 5.319066e-002, -2.045421e-002, -4.643258e-002, 2.665467e-002, -7.879347e-004, 3.998987e-003, 1.711179e-002, 4.800902e-003, 1.135660e-002, -7.608563e-004, -1.383848e-002, 1.033064e-003, -2.690945e-003, -2.245400e-004, 8.167909e-003, -7.882853e-003, 7.266619e-003, 1.003772e-002, -7.490485e-003, -2.002388e-002, 2.642036e-002, -2.611076e-002, -3.110827e-002, -4.248446e-002, -1.210436e-002, 2.643387e-002, -4.521534e-002, 2.977472e-002, 1.272615e-002, -2.041813e-002, 2.125230e-002, 9.087798e-003, -1.873103e-002, -2.627434e-003, 6.878187e-003, 9.966580e-003, 1.199413e-003, 2.445265e-003, -4.920918e-003, 3.489707e-003, -2.271463e-003, -3.888578e-004, 1.078731e-002, -3.566501e-002, 3.245354e-002, 2.126182e-002, 2.583982e-017, 2.073257e-003, -3.521250e-003, 1.562277e-002, -2.646039e-002, 3.470261e-002, -2.734762e-002, 2.238426e-004, 5.257525e-003, -1.823131e-002, 1.392430e-002, 6.858540e-003, -6.858540e-003, -1.392430e-002, 1.823131e-002, -5.257525e-003, -2.238426e-004, 2.734762e-002, -3.470261e-002, 2.646039e-002, -1.562277e-002, 3.521250e-003, -2.073257e-003, 2.454455e-003, 2.166937e-002, -6.468921e-002, 5.473920e-002, -1.142213e-001, 1.177606e-001, -3.747704e-002, -1.056224e-003, 1.597608e-002, 1.558262e-002, 2.136675e-002, 1.182420e-003, -1.268449e-002, 5.319684e-003, -1.902416e-002, 1.643526e-002, -2.307464e-003, -9.001275e-002, 1.074794e-001, -9.651624e-002, -1.718005e-002, -2.300050e-003, -4.020058e-002, 1.810112e-002, -4.248275e-002, 1.033680e-002, -5.404246e-002, -1.291478e-002, -2.784747e-002, 2.194376e-002, 1.032008e-002, -2.643535e-002, 1.575198e-002, -3.239350e-002, -3.757218e-002, -1.642512e-003, -1.194849e-002, 4.911218e-002, 2.976740e-003, -5.616871e-002, 7.232798e-002, 3.062768e-002, 3.319716e-002, -8.220149e-002, 2.505502e-002, 8.443541e-002, -1.113673e-001, 9.751533e-002, -2.644149e-002, 3.615097e-002, 6.234226e-002, -5.775057e-002, -3.210202e-002, 2.091882e-002, -7.555159e-003, -2.422362e-002, 7.250009e-003, -2.511788e-002, -2.233019e-004, -4.503692e-003, -4.695647e-002, -1.077469e-002, 7.272480e-002, 3.742689e-002, -1.294710e-001, -3.299769e-003, 1.102534e-001, 3.487991e-002, -4.986785e-002, 5.973400e-002, 8.243931e-002, 1.596376e-002, 3.756475e-002, -3.851017e-002, 9.200109e-002, 2.834739e-002, -2.076799e-004, -9.518238e-003, 3.583379e-002, -2.512743e-002, -4.065529e-003, -2.970448e-002, 5.921942e-003, 5.824257e-002, 9.485901e-003, -5.460812e-002, -1.540096e-002, 1.143650e-001, -1.063212e-001, 8.547010e-002, -1.731404e-001, 1.042323e-001, 1.179168e-002, -9.161852e-002, 6.020374e-002, 6.249386e-002, 3.691652e-003, -5.223040e-002, 1.920659e-002, -5.730977e-003, -2.651479e-002, -5.981678e-002, 1.242619e-003, -1.097190e-003, -6.301818e-003, -2.298389e-002, 1.340651e-002, 9.743050e-003, -3.353834e-002, 1.885601e-003, -2.563166e-002, -


© ISO/IEC 2004 — All rights reserved

Copyright International Organization for Standardization
Provided by IHS under license with ISO
No reproduction or networking permitted without license from IHS
Not for Resale

5.381815e-002, 1.089195e-002, 9.276014e-003, -4.168500e-002, -8.391293e-002, 4.839446e-002, 9.272693e-002, -1.273421e-001, 7.975574e-002, -1.860396e-002, -1.737865e-002, -4.703770e-002, -3.590645e-002, 3.935208e-002, 3.621750e-003, 3.649153e-003, 7.565980e-003, 1.706642e-002, -1.962574e-002, -1.155306e-002, 3.283137e-002, -3.018055e-002, 4.934774e-002, 8.603082e-002, -1.155311e-001, 4.897589e-002, 8.256383e-002, 2.327417e-001, -6.316937e-002, -4.101197e-002, 9.921071e-002, -1.143718e-001, 5.924684e-002, -2.089006e-002, -3.416145e-002, 3.242512e-002, -1.771440e-003, -6.067068e-003, -2.670525e-002, 1.764936e-002, 1.098625e-002, 2.052019e-002, 9.180293e-003, -2.855392e-002, -1.465180e-002, 1.536174e-002, -4.675696e-002, 5.938185e-002, 1.594147e-002, -1.490847e-001, -1.070094e-001, 2.331908e-002, 1.907196e-002, -1.848535e-002, 2.926054e-002, -1.466077e-002, 5.774002e-003, 7.624835e-003, 1.719846e-002, -5.252977e-003, -3.752080e-002, -2.890788e-002, -3.004841e-003, 2.103543e-002, -1.449010e-002, 5.215953e-003, 2.823789e-003, -9.488515e-003, -3.502131e-002, 4.100704e-002, -2.184068e-002, 4.694496e-002, 3.301564e-002, -1.427076e-002, 7.789997e-003, 3.044960e-003, -3.356077e-002, 2.182777e-002, -9.930084e-003, 8.609860e-003, 2.042282e-002, -2.662182e-002, -1.863422e-002, -1.545425e-002, -5.790838e-003, 3.431385e-004, -4.185034e-003, 8.921658e-003, -2.792001e-002, 1.432637e-002, 8.226823e-003, -3.048302e-002, 2.920026e-002, -1.551381e-002, -2.572003e-002, 5.377574e-002, -2.337842e-002, -8.518417e-003, 1.742899e-002, 9.831929e-003, -4.880528e-002, 2.828539e-002, -1.535044e-002, 7.866171e-003, 4.777079e-003, -2.449832e-002, -1.035105e-002, -2.820977e-003, -1.277670e-002, 3.030539e-005, -9.260825e-003, 1.640240e-003, 4.182625e-003, -1.825023e-002, 1.843317e-002, -1.615404e-002, 9.800063e-003, 1.954887e-002, 1.398602e-002, 4.842949e-002, -2.108949e-002, -1.084959e-002, 3.133038e-002, -4.688928e-003, -3.126899e-002, 4.671870e-002, -2.778400e-002, -8.533748e-003, -5.101759e-003, -1.681204e-002, 5.613376e-003, 1.871987e-003, -7.609247e-003, 8.630380e-003, -7.340888e-003, -1.045545e-002, 3.263242e-002, -2.019614e-002, -4.942363e-003, 3.151517e-002, 1.177522e-003, -3.049771e-002, -3.469420e-002, 3.516943e-002, 1.148907e-002, -5.699076e-003, 1.046837e-002, 4.196337e-003, -2.745308e-002, 1.156848e-002, -1.119004e-002, -1.773894e-002, -2.295477e-003, 3.258284e-003, -2.488393e-003, 4.683900e-003, 1.751324e-002, -3.919482e-003, -6.756699e-003, 9.539480e-003, -5.163633e-003, -4.246150e-003, 4.334887e-003, -2.615813e-002, 5.355949e-002, -4.273640e-003, -2.916248e-002, 3.817901e-002, -1.222813e-002, -2.043777e-003, 1.814749e-002, -2.486278e-003, -6.372056e-003, 2.269009e-003, -3.205928e-003, 5.177520e-003, 6.787931e-003, -1.353203e-003, 1.093246e-003, 2.073971e-003, 1.164315e-002, -2.211901e-003, -1.078057e-002, 1.154197e-002, -9.886151e-003, -1.344568e-002, 3.031494e-002, -1.262469e-002},

{-5.694078e-003, 1.605695e-002, -2.959474e-002, 3.054692e-002, -1.087046e-002, -4.709408e-002, 3.723802e-002, 8.135243e-005, 3.286221e-003, 1.662613e-002, -2.024782e-002, -5.896849e-003, -5.896849e-003, -2.024782e-002, 1.662613e-002, 3.286221e-003, 8.135243e-005, 3.723802e-002, -4.709408e-002, -1.087046e-002, 3.054692e-002, -2.959474e-002, 1.605695e-002, -1.994851e-002, 3.159019e-002, -2.006055e-002, -5.538263e-002, 6.950097e-002, -4.564182e-002, 3.025002e-002, 3.352265e-002, 1.658067e-002, 2.233386e-002, 4.921151e-003, -7.393518e-003, 3.320664e-003, -8.841664e-004, -4.631529e-002, 5.845555e-004, -8.020772e-003, 1.926078e-002, -4.121604e-002, 2.421286e-003, 3.723652e-002, -9.141877e-002, 4.460395e-002, 3.307972e-002, 3.797511e-002, 6.685500e-003, -5.014390e-003, -3.234108e-002, 6.828579e-002, 1.470374e-002, -2.350281e-002, 3.126230e-002, -2.856535e-002, 1.698577e-002, 1.046481e-002, -1.076048e-003, 7.726623e-003, 1.072549e-002, 7.671806e-004, -6.144618e-003, -6.152629e-003, 1.318772e-001, -9.530940e-002, -8.166400e-002, 1.159432e-001, 3.742083e-003, 4.250626e-002, 5.166007e-002, 1.117038e-002, -3.904302e-002, -1.110724e-002, -6.641027e-004, 4.900575e-003, 8.546999e-003, -5.664182e-002, 3.725795e-002, 1.720732e-002, 3.953251e-002, -2.902674e-002, -5.040990e-002, -2.563048e-002, -2.513628e-002, -3.838093e-002, -8.156937e-002, 2.235770e-002, -5.645684e-002, -6.600025e-002, 9.370283e-002, -7.846329e-002, -1.833450e-002, 3.407090e-002, -1.168653e-001, 1.036355e-001, 5.668387e-003, -5.750055e-002, 3.761413e-002, 1.558929e-002, 1.482459e-002, -2.077105e-002, 3.153743e-002, 1.393022e-002, 1.283617e-002, 1.834350e-002, -4.227197e-004, -1.782967e-002, -1.087145e-002, 4.401008e-002, -4.133256e-002, -2.102246e-002, 1.735547e-001, -7.976947e-002, 6.935609e-002, -1.656879e-001, -1.144451e-002, 1.643209e-001, -6.030044e-002, -4.615377e-002, 2.681988e-002, -1.127812e-003, 3.099789e-002, -2.081754e-002, -2.186466e-003, -1.184638e-002, 4.674890e-003, 1.193736e-002, 1.422441e-002, -1.165469e-002, -3.382052e-002, -2.603248e-002, -3.865852e-002, 2.055422e-003, 2.914843e-003, -2.308159e-003, 8.434623e-002, 8.718425e-002, 3.846884e-002, 2.556483e-002, -9.131250e-002, 4.640536e-002, -2.347360e-002, 3.974700e-002, -9.706610e-003, -2.866342e-002, 1.959662e-002, 3.989860e-003, -6.271688e-003, -1.841711e-002, -1.028118e-002, 8.222999e-003, 2.159144e-002, 3.173276e-003, -3.175479e-002, 1.850843e-002, 4.902011e-002, -5.323460e-002, 8.230567e-002, -9.445122e-002, 2.985654e-002, 3.843314e-003, 2.697191e-002, -7.403603e-003, 1.884811e-002, -1.082984e-002, -2.944963e-002, -2.901781e-002, 2.098665e-002, 1.304908e-002, -4.999632e-003, -2.573835e-002, -1.922689e-002, -1.467430e-002, -2.201250e-002, 1.259199e-002, 1.951936e-002, -1.670252e-002, -2.183634e-002, 2.020458e-002, -3.016053e-002, 4.641927e-002, -3.255404e-002, 1.081014e-004, 1.313937e-002, 1.285605e-002, 1.722018e-002, -2.415160e-002, 5.717173e-003, 1.027436e-002, 2.423106e-003, -1.574831e-002, -

© ISO/IEC 2004 — All rights reserved


Copyright International Organization for Standardization
Provided by IHS under license with ISO
No reproduction or networking permitted without license from IHS
Not for Resale

2.670863e-002, -1.137325e-002, 3.606353e-003, 4.283307e-003, -2.536903e-003, -9.794531e-003, 1.296168e-002, -3.271338e-003, 7.766160e-003, -1.354369e-002, 1.685330e-002, 3.286079e-002, -5.624982e-003, 1.051402e-002, -3.729211e-002, -1.618149e-002, 4.391825e-002, -9.349001e-003, -1.008019e-002, -2.362961e-002, 7.287969e-003, -3.988217e-002, -1.583867e-002, 1.363658e-002, -1.337539e-002, 1.177321e-002, 1.295927e-002, -8.418529e-004, -1.622078e-002, -1.419118e-002, 2.942469e-002, -8.535798e-003, 1.755256e-004, 4.488815e-002, -6.498849e-003, 5.523339e-003, 3.815920e-003, -2.566782e-003, -1.133035e-001, 3.916671e-002, 1.160877e-002, -2.648588e-002, 1.699751e-002, -6.333442e-002, 3.063605e-002, 1.130188e-002, -5.382765e-003, 1.224711e-002, -1.626942e-003, 1.096987e-002, 1.623037e-002, 1.258237e-002, -6.762734e-003, -2.498767e-003, 1.101773e-002, -7.313998e-003, -2.434197e-002, -3.078516e-003, 1.287336e-002, -2.129298e-002, 3.914463e-002, 8.138778e-002, -7.065100e-002, 1.726587e-002, -2.141444e-002, -2.247324e-002, 1.403669e-002, -2.531055e-002, 1.757529e-002, 5.485484e-003, -9.886729e-003, 1.044943e-002, -4.954702e-004, 1.048813e-003, 1.252368e-002, 1.521438e-002, 6.027945e-003, -1.233334e-003, 1.204158e-003, 1.924052e-002, -2.215158e-002, 1.980630e-002, 7.227188e-003, -6.113695e-002, -1.936183e-002, 5.814694e-003, 1.574537e-003, -1.343141e-002, -2.383771e-002, -1.502628e-002, 1.516163e-003, 1.773606e-002, 9.309039e-003, -2.393388e-003, 2.416993e-003, 4.895238e-003, 3.606484e-003, 6.209612e-003, 2.361980e-003, 1.128782e-002, -5.122156e-003, -2.108048e-002, -6.866646e-003, 9.095421e-003, -1.678448e-002, 2.443507e-002, 1.130385e-002, 6.852202e-002, -3.960323e-002, 1.322774e-002, -2.144163e-002, -4.270781e-003, -2.093600e-002, 3.095768e-002, 6.959243e-003, -1.357703e-003, 2.135869e-003, 3.589304e-003, 1.178824e-003, -4.255812e-003, 3.018971e-003, 5.648728e-003, -7.838709e-003, -2.977938e-003, -4.567045e-003, -2.262505e-002, 2.896021e-003, 8.326962e-004, 9.035513e-003, -4.540698e-002, 3.085263e-017, 6.026537e-003, -4.841128e-003, -2.369032e-002, 2.982709e-002, -1.683413e-002, -5.978415e-003, 4.865233e-003, 1.281285e-002, -1.266369e-002, 6.476874e-003, -7.318474e-003, 7.318474e-003, -6.476874e-003, 1.266369e-002, -1.281285e-002, -4.865233e-003, 5.978415e-003, 1.683413e-002, -2.982709e-002, 2.369032e-002, 4.841128e-003, -6.026537e-003, -3.641511e-003, 3.937372e-002, -5.373454e-002, 1.747080e-002, 3.255645e-003, -7.124737e-002, 4.467002e-002, -6.050188e-002, -1.386577e-002, 4.696369e-002, -2.123700e-002, -3.348964e-002, -2.847893e-002, 1.307123e-003, 3.307074e-002, -5.527432e-002, -1.179103e-001, 9.900959e-002, -4.257759e-002, -7.555308e-002, 5.013864e-002, 1.532828e-002, -3.810593e-002, -4.197416e-003, 5.257887e-002, -5.084981e-003, 2.178079e-002, -2.301947e-002, 1.183904e-001, -6.368608e-002, 2.843552e-002, 2.751823e-002, -1.294571e-002, 2.632379e-002, 2.030068e-002, 5.212359e-002, 7.708246e-004, -3.184246e-002, 1.154748e-002, 4.512606e-002, -1.044646e-001, 8.070165e-002, 6.196075e-002, -5.708537e-002, 3.268718e-002, 7.333295e-002, -4.273775e-002, -5.599692e-002, 1.843101e-001, -1.113077e-001, -4.685888e-002, 4.501465e-002, -2.754101e-003, 4.039120e-003, 3.419436e-002, 2.743027e-002, 3.780421e-003, 3.139250e-002, 4.987095e-002, 5.209012e-002, 1.843438e-002, 5.995712e-002, 5.148639e-002, 6.969966e-003, 2.209711e-002, -5.400265e-002, 8.922201e-002, 1.679920e-001, -7.223249e-002, 5.721122e-003, 2.183703e-002, -1.216941e-001, 9.287057e-002, 4.822078e-002, 6.412405e-003, -2.135573e-002, -3.085398e-003, -1.409773e-002, -8.862081e-003, -4.631579e-003, -1.417902e-002, 1.168681e-002, 2.662355e-002, 1.946197e-002, 1.827413e-002, -3.150167e-003, 1.895508e-002, 2.322135e-002, 3.294139e-002, 1.790766e-001, -2.011728e-001, 9.448297e-002, -2.917001e-003, 5.354366e-002, 4.519735e-002, -6.076719e-002, 1.885645e-002, -4.392438e-002, 6.555402e-003, 5.300194e-003, -1.452659e-002, 6.821437e-003, 1.015313e-002, 8.692362e-003, -4.186724e-002, -8.967245e-003, 1.890666e-002, -1.202776e-002, 1.219654e-002, -5.669056e-002, 5.242309e-003, 2.148871e-002, -4.857624e-002, -9.468892e-002, 3.153400e-002, -1.496294e-001, 5.810492e-003, 4.337099e-002, -6.922656e-003, -1.854568e-002, -2.179648e-002, -1.632841e-002, 1.039139e-002, -3.326963e-003, -5.642216e-002, -2.359932e-002, 1.842301e-003, 1.251230e-002, -4.074296e-003, -7.771931e-003, 2.189651e-002, -2.194410e-002, 2.218614e-002, 4.060621e-003, 3.748029e-002, -1.329393e-002, 8.304278e-002, 1.030237e-003, -1.695597e-002, 6.438266e-002, 6.623160e-002, -2.098444e-002, -2.592662e-002, -5.345883e-002, 1.000331e-002, -8.598300e-004, 1.007338e-002, 1.038217e-002, 3.005285e-002, 2.729833e-002, 1.417316e-002, 4.507103e-003, -8.602512e-003, -4.686183e-003, 8.667170e-003, -5.589791e-002, 6.781668e-003, 3.891883e-002, -5.802584e-002, 9.471224e-002, -2.805814e-002, 6.697807e-002, -3.963362e-002, -3.151327e-002, -4.489641e-002, 1.256096e-003, -8.579265e-003, 4.044795e-005, 3.080404e-002, 2.049669e-002, 1.296069e-002, 1.116057e-002, 3.982538e-003, -5.960196e-003, -1.365318e-002, 5.428133e-003, -7.023741e-003, 4.465274e-003, 2.757505e-002, 2.413015e-004, 2.721896e-002, 5.960875e-003, -1.022192e-002, -6.908146e-002, -8.141015e-002, 4.357760e-002, 3.961334e-002, -4.173363e-002, 4.896354e-004, -5.326997e-003, -5.492253e-003, 3.828543e-002, 1.626981e-004, 5.979669e-003, 2.293548e-002, 8.256504e-003, -6.129924e-003, 1.243148e-002, -1.898425e-002, 6.308698e-003, 1.378909e-002, -2.211002e-002, -9.482641e-004, 6.102716e-002, -4.999242e-002, 4.956626e-002, 3.054862e-002, 1.871058e-002, 2.369922e-002, -6.263956e-002, 4.890312e-002, -3.097941e-002, -1.272540e-002, 6.887402e-002, 4.869757e-003, 6.115506e-003, 1.682358e-002, 1.066413e-002, -3.271887e-003, -2.184309e-003, -8.627865e-003, 9.815503e-003, -8.948379e-003, -6.295200e-003, 4.812820e-002, -2.945414e-002, 1.410797e-002, 7.790996e-002, -6.709768e-002, -2.353857e-003, -8.750054e-002,


© ISO/IEC 2004 — All rights reserved

Copyright International Organization for Standardization
Provided by IHS under license with ISO
No reproduction or networking permitted without license from IHS
Not for Resale

1.057138e-002, 4.651261e-002, -6.830830e-002, 3.274259e-002, 4.294013e-003, -1.239740e-003, 2.825207e-002, -5.284869e-003, 9.735950e-003, -4.011051e-003, -7.766364e-003, -6.719783e-003, -4.756627e-003, 1.182601e-002, 1.298635e-003, 1.261753e-002, 3.513588e-003, 1.150668e-002, 2.739597e-002, -1.734282e-002, 2.086896e-002, 3.553741e-002, -3.299760e-003, -2.747366e-002, -1.117042e-002, 3.118623e-002, -4.058390e-002, 1.857931e-002, 3.054834e-002, -3.038515e-003, -9.757385e-004, -3.074402e-003, -5.323492e-004, -6.219900e-003, -2.309945e-003, -1.060572e-004, -4.406598e-003, 2.840725e-002, 6.706731e-003, 1.284420e-002, 7.355834e-003, -3.185742e-002, 5.582243e-002, -2.031818e-002, -2.334072e-002, -4.600816e-002, 2.983788e-002, -3.263639e-003, -4.387461e-002, 5.740683e-003, 3.041052e-002, 1.317416e-002, 2.858223e-003, -3.322221e-003, -2.070986e-003, 1.851134e-003, -2.736350e-003, 2.340990e-003, -6.810065e-003, 1.108068e-002, 4.724786e-003, -1.289700e-003, 1.362660e-002, 1.750771e-003, 4.930435e-003, -1.594620e-002, 5.306370e-003, 1.765873e-002},

{6.714091e-003, -2.854743e-003, -1.054469e-002, -4.069668e-002, 5.762925e-002, -4.148748e-002, -1.002630e-002, 2.158695e-002, -4.593491e-002, 2.756130e-002, 6.898882e-003, -1.301516e-003, -1.301516e-003, 6.898882e-003, 2.756130e-002, -4.593491e-002, 2.158695e-002, -1.002630e-002, -4.148748e-002, 5.762925e-002, -4.069668e-002, -1.054469e-002, -2.854743e-003, -2.873189e-002, 3.077159e-002, 7.832655e-003, -2.276403e-002, -4.383986e-002, 9.372847e-002, -1.498888e-002, -5.553508e-002, 8.828689e-003, -1.493812e-002, -2.146976e-002, -5.879233e-002, -6.786338e-003, -1.178939e-002, -2.342449e-002, 5.899103e-004, -5.181569e-002, 3.275085e-002, -1.200072e-002, 8.078774e-002, -1.578657e-001, 1.031701e-001, -4.242466e-002, 1.326231e-001, -4.427125e-002, 1.436473e-002, 9.344243e-002, -6.198730e-002, 2.008564e-002, 2.285127e-002, 3.840436e-003, 3.480932e-002, 5.233437e-002, 5.189310e-003, 2.415569e-002, 1.338836e-002, 3.905539e-003, -2.149769e-003, -5.915163e-003, 1.254142e-002, 4.689701e-003, -4.373312e-003, 1.613481e-002, -7.390771e-003, -4.891345e-002, 3.365998e-002, 5.682923e-003, -4.544717e-002, 3.501901e-002, -1.919371e-002, -7.185628e-002, 3.070911e-002, -4.390126e-002, -8.623585e-003, -4.878943e-003, 7.851614e-004, 3.747573e-002, 1.839662e-002, -1.358314e-002, 8.992259e-003, 3.748498e-002, 1.407647e-002, -6.797932e-003, 2.641386e-002, 8.894212e-002, -1.427185e-001, 4.444699e-003, 9.565251e-002, -4.024384e-002, 5.660426e-002, 3.365273e-002, -1.616090e-001, 1.066696e-001, 5.025176e-002, -2.245637e-002, -5.527282e-002, 3.146502e-003, 4.236857e-002, 5.351486e-003, -1.474892e-002, -1.950660e-002, -2.456032e-002, -1.483580e-002, -2.228103e-002, -2.328750e-002, -2.108054e-003, -1.529569e-002, -7.972014e-002, 2.102192e-002, 1.414175e-001, -8.656003e-003, 2.373401e-002, -5.803757e-002, -3.027017e-002, 2.110549e-003, -3.472103e-002, 5.750919e-003, -6.119034e-002, -2.887320e-003, 2.454469e-002, -9.590442e-004, -4.796732e-002, -3.708409e-002, 8.532111e-003, 3.046919e-002, 3.655999e-002, 1.398850e-002, -5.098137e-003, -5.861443e-003, -1.357362e-002, -8.549200e-003, -3.356754e-002, 1.909494e-002, 5.522275e-002, -4.265412e-002, 6.740312e-002, 7.229337e-002, 3.842013e-004, -4.516743e-002, 1.928956e-002, 1.073004e-001, -4.454204e-002, -1.664545e-002, -2.449285e-003, 3.806435e-003, -4.544842e-003, -1.417972e-002, -2.690636e-002, 2.307112e-003, 3.980000e-002, 3.535302e-002, -2.404983e-002, 6.453606e-004, 3.406511e-002, 1.677113e-002, -5.286903e-002, -6.921519e-002, 1.396026e-002, 5.563649e-002, 2.165262e-002, -5.290676e-002, 7.548387e-002, -2.550353e-002, -5.736828e-002, -6.580085e-003, 1.378202e-002, 1.079747e-002, -2.420125e-002, -3.099338e-002, 3.326350e-003, -8.220813e-003, -2.426408e-002, -2.964080e-002, 9.906039e-004, 4.332483e-003, 1.236440e-002, -6.263370e-002, 4.127691e-002, 1.513318e-001, -7.667742e-002, 7.241083e-004, -5.645757e-002, 9.114971e-003, 1.131573e-001, -1.252744e-001, 1.843125e-002, 1.851632e-003, -2.400509e-002, 3.984863e-002, -1.943716e-002, -1.686535e-002, 2.259821e-002, 3.340094e-003, -6.356488e-003, 1.071318e-004, 1.403293e-003, -1.516274e-002, 1.426843e-002, -1.166743e-002, 4.001845e-002, -1.570444e-002, -9.966449e-002, 9.434268e-002, 2.200707e-002, -3.785735e-002, 7.677189e-003, -4.090744e-003, 2.528723e-003, -1.093029e-002, -1.570432e-002, -5.671773e-003, -2.398679e-002, -4.896940e-003, 8.879440e-003, -7.175560e-004, 2.395753e-002, -2.749941e-003, -1.886976e-002, 7.065747e-003, 2.485000e-002, -1.302387e-002, -1.068360e-002, 5.861334e-003, -1.193179e-004, 4.203912e-002, -4.097166e-002, 5.038974e-002, -1.061584e-002, -4.010112e-002, -7.291088e-003, -2.108992e-002, 2.756763e-002, -3.714273e-002, -2.339178e-002, 2.780494e-002, -4.990749e-003, -2.034046e-002, 1.903672e-002, 2.834881e-003, -1.708729e-003, 9.351285e-003, -9.257950e-003, 1.641727e-002, 1.741547e-002, -2.548029e-002, -5.165170e-002, 2.952975e-002, 3.127339e-002, -3.034704e-002, 4.891438e-002, -8.335320e-004, -2.651989e-003, 2.108065e-002, -1.752448e-002, -1.565355e-002, -1.424553e-002, 2.058987e-002, -3.309951e-003, -2.752125e-002, 1.680655e-002, 4.035851e-003, -1.645226e-003, 6.826698e-003, 1.172681e-002, 2.761589e-002, -3.363339e-003, 8.044108e-004, -1.489849e-003, 2.748242e-004, -1.465845e-002, -2.488390e-002, 6.226983e-002, -7.391815e-003, -4.888184e-003, -1.509179e-002, -1.088759e-002, -3.389970e-002, -3.160220e-004, 2.333595e-002, -1.222912e-002, -9.956095e-003, 7.521768e-003, 6.155005e-003, 2.861998e-003, -4.281520e-003, -3.052710e-003, 7.945361e-003, 7.183171e-003, 1.761398e-002, -7.987753e-003, -2.651348e-002, 2.080344e-003, -5.044751e-004, 2.237252e-002, -3.803547e-003, 1.627182e-002, 1.976827e-002, -2.556471e-003, -8.664447e-003, -1.512501e-002, 1.598665e-002, -3.364975e-002, 1.204725e-002, 1.113421e-003, -9.133712e-003, 1.912866e-003, -4.797172e-004, 5.622185e-003, 1.190448e-002, -

© ISO/IEC 2004 — All rights reserved


Copyright International Organization for Standardization
Provided by IHS under license with ISO
No reproduction or networking permitted without license from IHS
Not for Resale

4.215092e-003, 8.766852e-003, 1.573086e-003, 2.759302e-003, 2.805011e-003, -3.856832e-002, 2.088503e-002, 1.467884e-002, -3.540252e-002, 3.634877e-002, 4.050575e-017, 3.496243e-003, -1.065892e-002, 3.277876e-002, -3.865082e-002, 3.586659e-002, -2.339524e-002, 2.960710e-003, 6.274798e-003, -4.133952e-003, -1.074798e-003, 1.752993e-002, -1.752993e-002, 1.074798e-003, 4.133952e-003, -6.274798e-003, -2.960710e-003, 2.339524e-002, -3.586659e-002, 3.865082e-002, -3.277876e-002, 1.065892e-002, -3.496243e-003, -3.071299e-004, -3.412615e-003, -2.297840e-002, 8.371311e-002, -5.426846e-002, 3.119570e-002, -3.137271e-002, -5.684452e-003, -2.223877e-002, 1.747770e-002, -2.486748e-002, -8.061624e-002, -5.230907e-003, 1.420162e-002, -1.383998e-002, -4.520177e-002, 2.530525e-003, 2.403030e-002, -1.324855e-002, -4.935938e-002, -2.330648e-003, -8.726212e-003, 3.824625e-002, -5.278519e-002, 6.232866e-002, -1.394382e-001, 4.599331e-002, 4.225273e-002, -2.788632e-002, -1.320276e-002, -1.943739e-002, 3.744090e-002, -1.121042e-002, 3.478728e-003, 5.827469e-003, -8.263909e-003, -2.949581e-002, -1.706299e-002, 3.638065e-002, 1.602117e-002, 3.557861e-002, -3.440011e-002, -4.460864e-002, 1.112163e-001, -8.982539e-002, 4.791121e-002, 7.547312e-002, -7.417637e-002, 2.152243e-002, 2.384270e-002, -5.292016e-002, 5.955778e-002, -4.665398e-002, -2.374991e-002, -6.540307e-003, 4.587129e-002, -3.069516e-003, -2.089279e-002, 1.426590e-002, 1.735599e-002, 1.038528e-002, -1.184811e-002, 1.146846e-002, -4.086572e-002, 1.057707e-001, -1.274759e-001, 7.552417e-002, 1.030822e-001, -7.714296e-002, -2.571735e-002, 7.822610e-002, -7.518406e-002, 6.591241e-002, 4.415262e-002, -4.355680e-002, 7.804632e-002, 1.582762e-002, 1.974924e-002, -1.102937e-002, -9.567056e-003, 3.535460e-003, 3.016676e-003, 1.051109e-002, 4.579704e-003, 3.814506e-003, -4.231575e-002, 1.733132e-002, -3.737431e-003, -1.807394e-002, 1.298512e-001, -1.320757e-001, -6.947830e-002, -1.854188e-002, 1.619763e-002, 5.218508e-002, -7.254222e-002, 3.663531e-002, 3.456337e-002, -2.465279e-002, 3.737898e-002, -1.109737e-002, -1.673051e-002, -6.273449e-003, -1.449114e-002, -4.370459e-002, -2.088279e-002, 6.074128e-003, -1.272361e-002, 3.533660e-002, 6.740534e-003, 4.106340e-002, 7.187445e-002, -7.281526e-002, -1.075438e-002, 3.432146e-002, -1.442878e-001, 1.292371e-001, 3.468344e-002, 6.738683e-003, 2.708395e-002, -4.377441e-002, -3.379725e-002, -1.688751e-002, 2.638223e-002, 7.089607e-003, -1.791517e-002, 1.185691e-002, -6.575129e-003, -1.046994e-002, -3.721804e-002, 2.967821e-003, 9.539781e-003, 4.813294e-003, -4.310997e-002, 1.820640e-002, 8.383782e-003, -4.820147e-002, 7.521525e-002, 7.954248e-002, -8.986247e-002, 4.036231e-003, 4.342829e-002, -4.225443e-002, -9.459769e-003, 2.194850e-002, 1.125468e-002, 4.664863e-003, -3.137068e-002, 1.882527e-002, 1.737522e-002, 1.183421e-002, 1.423778e-002, 2.148884e-002, -4.846990e-002, -3.695392e-002, 1.346785e-002, -2.925539e-002, -1.641763e-002, 1.278080e-002, 6.280933e-002, -1.062958e-001, 2.432293e-002, 7.713424e-002, 5.106588e-002, -1.071458e-001, 1.801336e-002, 3.789199e-002, -1.527164e-002, 2.082225e-002, -1.613695e-002, 3.386835e-002, -2.463688e-003, -1.017359e-002, -3.274910e-002, 1.512665e-003, 3.517536e-002, 3.904914e-003, -2.028529e-002, -3.831519e-002, 3.556749e-002, -1.743747e-002, -7.661613e-002, -1.663377e-002, 2.126220e-002, 8.337825e-002, -3.006708e-002, -5.077470e-002, 7.024121e-002, -5.580802e-003, -7.919969e-003, 2.339169e-002, 1.697506e-002, 3.655841e-002, -2.378342e-002, 8.815455e-003, 8.169247e-003, 1.084199e-002, -2.818121e-002, -3.235168e-002, 3.776929e-002, 1.468539e-002, 4.138844e-003, -3.792218e-002, -9.120905e-003, 9.055621e-002, -1.105534e-001, -6.430080e-002, -2.780552e-002, 1.524101e-002, 5.292006e-002, -5.176508e-002, 2.727898e-002, -2.446693e-002, 2.603625e-002, 2.572256e-002, -2.466708e-002, 2.471591e-002, 1.830219e-002, 1.963206e-003, -7.957749e-003, -1.010337e-002, 9.458008e-003, -1.639719e-002, 3.496527e-002, 3.797030e-002, -2.289623e-002, -1.401493e-002, -3.944510e-002, 2.630623e-002, -7.044169e-003, 4.468627e-002, -6.480488e-002, 1.365863e-002, 3.016854e-003, -3.062926e-002, 3.129881e-002, -4.753404e-003, -8.909696e-003, 1.829237e-002, 6.867007e-003, -8.885238e-003, -1.200658e-002, -1.806289e-002, -1.603782e-003, -1.100064e-002, 2.073994e-002, 9.212259e-005, 2.238227e-003, 2.492754e-002, -5.686513e-002, 3.822426e-002, 2.421324e-003, -4.335368e-002, 3.933714e-002, -4.577480e-002, -1.621129e-002, 3.065305e-004, 3.708566e-002, -1.819358e-003, -1.658279e-002, 1.262078e-002, 7.531762e-003, -1.188156e-002, 1.883771e-003, -8.468162e-003, 1.561243e-003, -1.228519e-002, 9.973449e-003, 9.903119e-003, 2.362797e-002, 5.206525e-003, -2.221383e-002, 9.923474e-003, 1.554344e-002, -1.714942e-002, -2.343309e-002, 3.872261e-002, -4.695931e-002, 2.058491e-002, -1.279869e-002, 6.688026e-003, -7.036056e-003, 2.445719e-002, 2.736673e-003, -1.276721e-002, 9.618723e-003, -1.074169e-002, -1.343594e-004, 1.745028e-003, 4.110487e-003, 8.289584e-004, 6.424392e-003, 1.065481e-002, 1.677850e-002, -6.351502e-003, -1.050270e-002, -1.993130e-002, 3.039872e-002, -5.990069e-002},

{-3.702740e-003, -8.904886e-003, 2.598268e-002, 6.730072e-003, -2.446606e-002, 6.049933e-002, -4.408336e-002, 7.699393e-002, -4.033351e-002, 1.787525e-002, 3.645545e-002, -1.055902e-004, -1.055902e-004, 3.645545e-002, 1.787525e-002, -4.033351e-002, 7.699393e-002, -4.408336e-002, 6.049933e-002, -2.446606e-002, 6.730072e-003, 2.598268e-002, -8.904886e-003, -2.027431e-003, 2.319310e-002, 4.058863e-003, 1.987636e-002, 6.870801e-002, -4.907515e-002, -2.782652e-002, 8.050357e-002, 3.357173e-002, -1.511680e-002, -1.594742e-002, 3.551826e-002, 3.596588e-002, 6.440590e-002, 4.505473e-002, 8.321496e-002, -7.957983e-003, 1.884097e-002, 6.548641e-002, -1.403121e-002, 5.558384e-002, 8.012297e-002, 6.536741e-003, -2.855895e-002, -4.056461e-002, -



© ISO/IEC 2004 — All rights reserved

Copyright International Organization for Standardization
Provided by IHS under license with ISO
No reproduction or networking permitted without license from IHS
Not for Resale

6.284816e-003, -7.000072e-002, 7.141066e-002, -1.426947e-001, 7.686895e-002, -8.963673e-002, -2.415587e-002, -3.362821e-002, 1.560021e-002, -4.249687e-002, 3.348545e-002, -1.082899e-002, 1.241169e-003, -5.532316e-002, -4.546111e-002, 1.443108e-002, -2.575604e-002, 1.213731e-002, 1.327131e-002, -5.694530e-002, -3.683194e-002, 8.763047e-002, -1.235035e-001, 1.109214e-001, -3.904939e-002, -3.143707e-002, 4.287166e-002, -2.347256e-002, -3.829205e-003, -3.870290e-002, 6.254227e-002, -5.358020e-002, -5.268663e-002, -4.463101e-002, -2.105724e-002, -3.213028e-002, -1.833060e-002, -1.772321e-003, -7.963544e-002, 8.462563e-002, -7.224478e-002, 1.885132e-002, 3.157932e-002, -1.140420e-001, -3.747873e-002, 1.913139e-002, -3.006675e-003, 8.154571e-002, -3.180599e-002, 2.713945e-002, 6.325166e-002, -2.272492e-002, 2.636421e-002, -4.863563e-002, -4.582179e-003, -4.781786e-003, 9.461057e-003, -7.395097e-003, -1.402274e-002, 2.721844e-002, 3.361987e-002, 2.162604e-002, -5.133274e-002, -1.608602e-002, 3.714587e-002, -6.435421e-002, -8.292560e-002, 1.754849e-002, 4.680241e-003, -7.207012e-002, 5.350667e-002, 2.545043e-002, -2.637845e-002, 2.919390e-003, -3.713724e-003, -1.294337e-002, 2.572697e-002, 1.841039e-002, 3.405200e-002, 1.890119e-002, 3.707357e-003, -3.523164e-002, -2.626393e-002, 8.892079e-003, -4.635351e-002, -4.272301e-002, 3.123617e-002, 9.986329e-003, 3.485493e-002, 1.916359e-002, 5.798127e-002, -1.063816e-002, 4.296250e-003, 2.887713e-002, -1.819036e-002, 9.443428e-002, 1.492661e-002, 2.189406e-002, -1.411289e-002, 2.372120e-003, -1.443336e-003, -2.423114e-003, -1.018962e-002, -4.723140e-003, 1.759484e-002, -6.540362e-003, -1.339918e-002, 2.615570e-002, 8.672067e-003, -2.387442e-002, -2.070966e-002, -1.106815e-001, -1.664425e-002, -9.817026e-002, 7.359443e-002, 1.207331e-002, 5.225883e-002, -4.944146e-002, -1.557961e-002, 1.190364e-002, 1.599127e-002, 5.602379e-002, -3.328026e-002, -2.025777e-002, -1.335822e-003, 4.195076e-004, -4.078866e-003, -4.076028e-003, 4.175380e-004, -3.647563e-003, 1.713744e-002, -3.738770e-002, -1.075567e-002, 6.274762e-002, 1.154205e-002, 5.724512e-002, 7.327007e-002, -1.591844e-002, -5.513161e-002, -3.076773e-004, 4.278490e-002, 3.416908e-002, 1.274712e-002, -8.273242e-003, -2.387373e-002, -3.047004e-002, -2.837002e-002, 8.095200e-003, 9.336097e-004, 5.679666e-003, 2.174201e-002, 3.003984e-002, -6.877977e-004, -5.564223e-002, 8.622319e-002, -3.006827e-002, -4.619814e-003, -1.550789e-002, -2.237805e-002, -6.477060e-002, 1.339635e-003, 6.450073e-003, -3.910511e-002, 5.594132e-002, -9.584997e-003, -3.735127e-002, 9.834319e-003, -5.484876e-003, -3.058635e-002, 7.280614e-003, 1.014421e-002, 1.186248e-002, -6.378345e-003, -1.719651e-003, 2.388460e-002, -2.111043e-002, 3.584653e-002, -2.829056e-002, 4.125754e-002, -1.416294e-002, 3.591309e-002, 1.490371e-003, -9.468814e-003, 1.028395e-002, -3.186609e-003, 1.248863e-002, -2.154863e-002, 5.996924e-003, 1.408332e-002, -3.218061e-003, -2.810270e-003, -1.174739e-003, 6.629312e-003, 1.194680e-002, 7.969554e-003, 9.311030e-003, -1.268019e-003, -9.428300e-003, 7.027484e-003, -1.802376e-002, 1.169301e-002, -1.214736e-002, -5.965567e-002, 4.542975e-002, -7.188671e-003, 8.063082e-002, -2.329623e-003, -4.821774e-002, 3.128063e-003, 3.377267e-002, -1.457983e-002, -1.423264e-002, 1.688528e-002, 9.647516e-004, 1.933244e-003, 1.796054e-002, -1.031649e-003, 2.140025e-003, 4.484433e-003, -2.499590e-003, 5.233763e-003, 2.264587e-002, -2.666680e-002, -1.066405e-003, -3.261997e-004, -2.131106e-002, -3.436474e-002, -3.290867e-002, -3.227539e-002, 1.717320e-002, 2.681558e-002, 7.652488e-003, 1.584670e-002, -3.840948e-002, 1.190141e-002, 2.978596e-003, -9.830963e-003, -2.760205e-003, 1.322644e-002, 3.059353e-003, 5.265529e-003, 3.433758e-003, -4.884586e-003, 8.454971e-003, -1.930806e-002, 1.758360e-002, -3.345141e-002, -2.261167e-002, -9.737135e-003, 1.746996e-002, 3.146892e-002, 1.995598e-002, -1.435861e-002, 3.884356e-002, -8.970417e-003, -8.258696e-003, 1.056487e-002, 8.465829e-003, -3.739890e-003, -4.292300e-003, 6.705880e-003, 7.873342e-003, 1.120636e-003, -9.270326e-003, -5.334352e-004, 9.428880e-003, -3.606027e-003, 3.008499e-003, -2.293466e-002, 8.511818e-004, 1.763617e-002, -4.827078e-002, 7.139911e-003, 6.019564e-003, -4.429658e-017, 2.910416e-003, 5.205697e-003, -1.234540e-002, 1.474432e-002, 3.042308e-003, -1.023447e-002, -1.544484e-005, 1.281265e-002, -3.960257e-003, 1.930808e-002, 1.040168e-002, -1.040168e-002, -1.930808e-002, 3.960257e-003, -1.281265e-002, 1.544484e-005, 1.023447e-002, -3.042308e-003, -1.474432e-002, 1.234540e-002, -5.205697e-003, -2.910416e-003, 1.299618e-002, 1.224124e-002, 7.144589e-002, -1.101562e-001, 1.334999e-001, -3.427651e-002, 2.037732e-002, 5.382720e-002, -2.004859e-002, 1.808739e-003, 4.323712e-002, 5.297974e-002, -2.155989e-003, 2.146520e-002, 2.257830e-002, 1.111001e-002, 1.517804e-002, 4.357308e-002, -3.500376e-002, 8.973460e-002, -5.796736e-002, 3.371015e-002, -1.275732e-002, -1.259905e-001, 3.041502e-002, 5.940662e-002, -4.264032e-002, 1.015426e-002, 2.084188e-002, -5.576186e-002, -6.083540e-002, -1.776161e-002, -4.432481e-002, -1.567544e-002, -2.258390e-002, 1.832933e-004, 1.421996e-002, -6.939337e-003, -1.123060e-004, 2.725855e-002, -7.974386e-002, 3.634416e-002, -6.823011e-002, -3.621283e-002, -6.233855e-002, 3.956168e-002, 1.101047e-001, 4.287865e-003, -1.922220e-002, 2.147721e-002, -9.771041e-002, 1.339927e-001, 4.322454e-002, 4.381117e-004, 1.159675e-002, 1.493708e-002, -1.698389e-002, 4.353571e-002, -1.087546e-002, -7.435956e-003, 7.372089e-003, 1.770150e-002, -1.647554e-002, -4.624584e-002, 2.519210e-002, -1.133526e-001, 4.827606e-002, -3.982455e-002, -1.521769e-002, 1.056733e-002, 3.384655e-002, 1.442250e-002, 1.772575e-001, 6.842857e-004, -1.227475e-001, 1.212125e-002, 2.023858e-002, 5.096721e-002, -1.680326e-002, 7.073022e-003, -1.535785e-002, 4.503001e-002, 1.699162e-002, -2.406586e-002, -4.049802e-002, 1.025425e-002, 8.806612e-002, -

© ISO/IEC 2004 — All rights reserved


Copyright International Organization for Standardization
Provided by IHS under license with ISO
No reproduction or networking permitted without license from IHS
Not for Resale

9.207711e-002, 1.298756e-001, 1.297361e-002, 1.277542e-002, -8.280376e-002, 1.044660e-001, 6.043022e-002, -9.403264e-002, -2.411069e-002, -6.870297e-002, 1.366537e-001, -6.609810e-002, -2.531524e-002, -3.604180e-002, 2.520819e-002, 1.918223e-002, 2.411574e-002, -1.094583e-002, 1.991713e-002, -1.051972e-002, -1.309578e-002, 3.394416e-002, -9.987945e-002, 5.619344e-002, -2.937154e-002, -2.056710e-002, -1.488121e-001, 1.624773e-001, -1.177097e-001, -8.395006e-002, 1.087892e-001, -6.749300e-002, -1.508031e-002, -2.739732e-003, 1.954302e-003, -3.350730e-002, 6.770552e-004, -2.151590e-002, -6.242812e-003, -3.161102e-002, 2.275463e-002, 4.118707e-003, -2.294929e-003, 1.490189e-003, -1.935579e-002, 4.184060e-002, -6.821995e-002, -3.916396e-002, 6.019007e-003, 1.237802e-001, -3.994313e-002, 4.323663e-002, 1.237184e-002, -3.918089e-002, 2.641323e-003, 4.157202e-002, -5.442259e-002, 1.491283e-002, 1.243073e-002, -3.506723e-002, -5.316262e-003, 2.225322e-002, 1.111188e-002, 6.910471e-003, 2.449344e-003, 1.795417e-003, -4.026330e-002, 3.181604e-002, 2.875961e-002, 5.240961e-003, 8.127500e-002, -7.052052e-002, -1.608219e-002, -4.647024e-002, 4.085018e-002, -1.025631e-002, -4.564071e-002, 7.643437e-003, -5.473944e-002, 6.843820e-003, -8.802028e-003, 2.360086e-002, -9.592813e-003, -3.616005e-003, 1.895879e-002, 1.581824e-002, -6.502955e-003, 1.885445e-003, 5.833695e-003, 2.389343e-002, 2.030403e-002, -2.767061e-002, 4.458645e-002, -2.630430e-002, 1.439218e-002, -5.248273e-002, -7.804958e-003, -2.700041e-002, -5.123673e-002, 3.354193e-002, -7.544187e-003, 3.600782e-003, -4.810450e-002, 3.282013e-002, -2.931010e-002, -2.198988e-002, -1.415625e-002, 1.076618e-002, 1.206588e-002, 4.905674e-003, -1.442164e-002, -1.107496e-002, 2.292409e-003, -1.689986e-002, 1.703697e-002, -8.152201e-003, 1.381962e-002, 2.119934e-002, 4.294883e-002, -6.543192e-003, 6.641439e-002, -6.807218e-002, -5.710062e-002, 2.479620e-002, -5.592742e-003, 2.032414e-002, 1.603567e-003, -1.895739e-003, -7.788438e-003, 2.280728e-002, 1.237826e-002, -7.574650e-004, -3.209848e-004, 3.099723e-003, 8.331250e-003, -1.001222e-002, 1.884197e-002, 5.482892e-004, 1.836698e-004, 4.007085e-002, 2.012214e-002, -6.328868e-002, -3.496337e-002, -3.252188e-002, -2.068932e-002, -3.522763e-002, -1.067918e-002, -1.815027e-003, -3.674261e-003, -9.306835e-003, 2.033265e-002, 1.538177e-002, 6.274324e-003, 7.794288e-005, -6.930425e-003, 8.802441e-003, 1.096304e-002, -6.185107e-003, -1.769014e-003, 2.900418e-003, 2.969149e-002, -7.337682e-003, -8.345708e-003, 2.357532e-002, -1.646900e-002, 2.548620e-002, 4.298022e-004, -5.834610e-002, 1.138707e-002, -2.604232e-002, -3.230737e-002, 2.656346e-002, 1.996066e-002, -1.295030e-002, -1.079049e-003, 9.265307e-003, 1.210555e-002, 7.564408e-006, 5.286574e-003, 4.422558e-004, 8.349367e-003, 7.343157e-003, 8.905889e-003, 8.443462e-003, 3.254498e-002, -2.013770e-002, -3.396029e-002, 1.783657e-002, -6.590337e-003, 2.462795e-002, -8.877327e-003, -3.300777e-002, -1.068205e-002, 1.707998e-002, -9.745092e-003, -8.892195e-003, 2.062410e-003, -3.268854e-003, 1.301918e-002, 3.922532e-003, -6.416512e-003, 3.256759e-003, -3.111935e-003, 1.051166e-002, 3.761423e-003, 1.114655e-002, 5.609049e-003, -1.472026e-002, 1.133313e-002, 2.822281e-003, -3.840791e-002, 3.756109e-003},

{1.232059e-003, 6.179330e-004, 1.189697e-002, -1.015625e-002, 2.109270e-003, 2.302208e-002, 4.903354e-003, -1.852178e-002, 6.219681e-002, -2.511857e-002, -5.145017e-002, 4.013226e-002, 4.013226e-002, -5.145017e-002, -2.511857e-002, 6.219681e-002, -1.852178e-002, 4.903354e-003, 2.302208e-002, 2.109270e-003, -1.015625e-002, 1.189697e-002, 6.179330e-004, -7.807346e-003, -2.511479e-002, 3.218107e-002, 1.307429e-001, -1.174636e-001, 4.422182e-002, 4.522914e-002, 4.528800e-002, 8.622137e-003, -1.070503e-002, 4.221589e-002, 3.048052e-002, -2.440224e-002, 2.217957e-002, 2.868063e-002, -1.230619e-002, 2.755857e-002, 3.685019e-002, -8.339251e-002, 1.468908e-001, -1.345358e-001, 3.891607e-002, 1.840317e-002, 2.730139e-002, 3.131756e-002, -3.436910e-002, 3.860187e-002, 1.269536e-002, -1.081602e-002, 1.610647e-002, -8.459643e-003, -4.733073e-002, -2.373707e-003, -2.330443e-002, -9.726073e-003, 1.704106e-002, 1.274713e-002, 8.672585e-003, -2.297576e-002, 4.114617e-002, 4.752169e-002, -7.011558e-002, 1.428544e-001, -4.444031e-002, 6.793717e-002, 1.474534e-002, -4.163523e-002, -9.536676e-002, 1.034582e-001, -2.565120e-002, -1.564095e-002, 2.884021e-002, -2.232120e-002, -1.633112e-002, 5.572729e-003, -4.137559e-002, -3.007657e-002, -7.596389e-003, -4.525585e-002, 2.861606e-003, -1.289083e-002, -1.019084e-002, 4.273937e-003, 2.046907e-002, 4.859363e-002, -6.174945e-002, -3.619900e-002, 1.690448e-003, 2.946508e-002, -1.319814e-001, 3.123844e-002, -9.580265e-002, 2.472426e-002, 6.288403e-002, 2.480670e-002, -6.531192e-003, -1.425977e-003, -2.217165e-002, 6.167297e-002, 4.382495e-002, 3.465111e-002, -1.021548e-002, -7.221310e-002, -2.215369e-002, -1.342116e-002, -1.717963e-002, -1.059208e-002, -8.834448e-002, 2.368401e-002, -4.688430e-002, -2.075174e-002, -6.490876e-002, 1.263392e-001, 1.378770e-002, -7.520124e-002, 2.229022e-003, -6.338853e-002, -3.466662e-003, 5.022987e-002, -8.402671e-003, 4.622022e-002, -9.473758e-003, 1.370905e-002, 1.980248e-003, 4.284690e-003, 1.530637e-002, -2.384510e-002, -1.598585e-002, -2.376869e-002, -6.229068e-003, 8.575291e-002, -4.577500e-002, -3.128125e-004, 9.754151e-002, -1.059063e-001, -1.084149e-001, 5.589771e-002, 7.517659e-003, 3.622824e-002, -1.701528e-002, -3.547198e-002, -2.253551e-002, 1.078518e-002, -3.980625e-002, 2.633265e-002, 2.163360e-002, 2.903399e-002, 7.426328e-003, -1.707450e-002, 3.776255e-002, 3.705188e-002, 3.086119e-002, 9.128286e-003, -1.016374e-001, 3.710843e-002, 2.466905e-002, 1.173141e-002, -5.443529e-002, 2.687636e-002, -3.298149e-002, -2.512599e-002, -7.825515e-003, -4.436357e-002, 2.367046e-002, 2.177730e-002,


© ISO/IEC 2004 — All rights reserved

--`,,```,,,,````-`-`,,`,,`,`,,`---

Copyright International Organization for Standardization
Provided by IHS under license with ISO
No reproduction or networking permitted without license from IHS

Not for Resale

6.086201e-003, 3.034634e-002, 1.917916e-002, 1.993476e-002, -7.557772e-003, -2.544633e-002, -4.337018e-003, -2.407125e-002, 1.649920e-003, 1.349904e-002, 1.698264e-002, 3.449747e-002, -1.444368e-002, -6.102169e-002, 3.852522e-002, 7.577485e-002, 4.745661e-002, -6.245256e-002, 4.732480e-002, -6.961110e-003, -2.798232e-002, -4.366311e-002, -1.036007e-002, 2.335342e-002, -1.298135e-003, 2.730592e-003, -1.395848e-002, 1.884596e-002, -1.570014e-004, -3.630997e-002, 2.240213e-004, 4.364163e-004, -3.388572e-002, 9.150806e-003, 2.770662e-002, -3.592893e-002, 9.913735e-003, 1.178705e-002, 5.693765e-002, 2.045136e-002, 3.248100e-003, -3.205925e-002, -1.689532e-002, 2.176820e-002, -2.999956e-004, 2.429126e-002, -2.593660e-003, 8.623457e-003, -1.728742e-002, 2.868636e-002, 1.238650e-002, -1.222556e-002, -7.468317e-003, -1.486843e-002, 1.111955e-002, 1.315461e-002, -2.411629e-002, -4.170547e-002, 3.147833e-002, -2.261222e-002, -4.316365e-002, 1.882321e-002, 3.743611e-002, -2.649495e-002, 3.615727e-003, 1.735209e-002, -7.007267e-003, -7.082778e-003, 9.997797e-004, 1.416103e-002, -9.491553e-003, 2.126631e-002, 1.671266e-003, 1.971872e-002, -5.620358e-003, -1.747307e-002, 3.346328e-003, -2.187937e-003, -8.931401e-004, 3.117693e-003, -5.541574e-003, -2.426068e-002, 2.510906e-003, -2.172375e-003, 2.808696e-003, -1.336590e-002, -1.076118e-002, 1.491638e-002, -2.200951e-002, -1.362862e-002, 2.038257e-002, 1.164803e-002, -1.311394e-002, 7.869847e-003, 1.111099e-003, 1.557270e-002, -7.818960e-003, -1.461838e-002, -6.411611e-003, -7.522431e-003, 2.320808e-002, -5.145618e-003, -4.764344e-002, 1.027687e-002, 3.088987e-002, -5.549744e-002, 3.729316e-002, -2.649721e-003, 1.794582e-002, 1.167591e-002, -8.338195e-002, 2.228550e-002, 9.335892e-003, 2.535868e-003, 1.950547e-002, -1.637416e-002, -1.074095e-002, 6.845235e-003, -4.751011e-004, 6.656444e-004, 5.233386e-003, -8.205719e-003, 3.684569e-003, -9.702604e-003, -1.880389e-002, 1.330216e-002, -3.276926e-002, -8.437856e-003, 6.632939e-002, -4.923108e-002, -1.307509e-002, -3.932568e-002, -1.278312e-003, 9.741185e-003, -9.005846e-003, -9.535856e-003, 1.562495e-002, -8.994068e-003, 1.702870e-003, 2.875491e-003, -2.048938e-003, -2.410973e-003, -1.919684e-003, -3.073813e-003, 6.089625e-003, -1.082232e-002, -6.814398e-003, 1.266528e-003, -4.090123e-002, 3.733089e-002, 6.410645e-003, -2.987157e-002, 1.519812e-002, 2.209302e-002, -3.729665e-017, -1.937182e-003, -7.102903e-003, 3.802321e-002, -7.114471e-002, 6.512908e-002, -5.232940e-003, -3.356035e-002, 3.203365e-003, 4.936951e-002, -3.334724e-002, -1.056957e-002, 1.056957e-002, 3.334724e-002, -4.936951e-002, -3.203365e-003, 3.356035e-002, 5.232940e-003, -6.512908e-002, 7.114471e-002, -3.802321e-002, 7.102903e-003, 1.937182e-003, -3.149404e-003, -5.428641e-002, 1.779214e-002, 3.114551e-002, -8.964684e-002, 3.652761e-002, -4.484794e-002, 5.924858e-003, -2.261792e-002, -4.285064e-002, -1.154867e-002, 1.787961e-002, 5.858830e-002, -3.823587e-003, 8.733953e-003, 2.837798e-002, -2.808956e-002, -7.011181e-002, 4.601138e-002, 2.862004e-003, -5.401867e-002, -1.833710e-002, 9.070528e-003, -2.871857e-002, 7.397945e-002, -4.964843e-003, 1.146494e-002, 8.873790e-002, -2.833700e-003, 2.679958e-002, -1.060857e-002, 4.177274e-002, 3.739570e-002, 4.345642e-002, 3.925293e-002, 2.527301e-002, 3.611418e-002, 5.862342e-003, -4.259308e-002, -6.026333e-002, 6.866330e-002, 1.404684e-002, -1.836706e-001, 1.049014e-001, -4.383407e-002, -1.797327e-002, 8.566561e-002, -2.944000e-002, -3.566002e-002, 3.097246e-002, 1.341440e-002, -1.347892e-002, -3.072911e-002, 2.877164e-002, -7.010239e-002, -2.980805e-002, -1.274104e-002, -2.651750e-003, -5.950660e-003, -7.717333e-003, 1.792051e-002, -1.679078e-002, 6.506836e-002, -4.812461e-002, 1.595919e-002, 3.173363e-002, 2.312578e-002, 4.446381e-002, -7.774016e-002, 5.956609e-003, 1.585557e-001, -2.865468e-003, -8.663153e-002, 3.481519e-002, 5.048356e-004, 9.951985e-002, -4.366708e-002, 3.505395e-002, 4.640083e-002, 1.526326e-002, -2.355389e-002, 1.701691e-002, 3.079404e-002, -2.042424e-002, 4.413712e-002, -3.572851e-003, 2.242202e-002, 4.645603e-002, 2.550426e-002, -1.098205e-001, 5.876749e-002, 8.235862e-002, -9.560869e-003, -3.649756e-002, 4.869943e-002, 3.425264e-002, -5.887374e-002, -1.353662e-002, -7.604264e-002, -2.871684e-002, 6.446716e-003, 1.297220e-002, -1.750092e-002, -7.995478e-003, 1.891432e-003, -1.024849e-002, -2.055539e-003, -2.659803e-002, 6.328412e-002, 1.838154e-002, 1.346107e-002, -3.723415e-002, 1.129501e-001, -9.586340e-002, 6.116462e-002, -1.237327e-002, -7.084505e-002, -2.988368e-002, -7.066069e-002, 2.429878e-002, -1.215624e-002, 4.514242e-002, -7.572362e-002, -1.372675e-003, 2.806995e-002, 9.142990e-004, 2.005344e-003, 1.815731e-002, 4.097537e-002, -1.072782e-002, -2.719868e-003, -3.620527e-002, 5.949123e-002, -6.915414e-002, 4.643380e-002, 5.208763e-002, -5.218261e-002, 5.580561e-002, -5.404324e-002, -2.996659e-002, 1.180084e-001, -2.905669e-002, -7.264354e-004, 5.995440e-002, -4.950261e-002, 3.041247e-002, 5.974278e-002, 2.665399e-002, 2.026190e-002, -1.624380e-002, -2.674219e-002, -1.414054e-002, 3.379630e-002, -2.623177e-002, 2.077694e-002, -2.233415e-002, 1.155221e-001, -1.322652e-002, -1.089437e-001, 1.480811e-001, 2.965218e-002, 2.834540e-002, -2.847662e-002, -1.588746e-002, 6.044609e-002, 2.752726e-005, -5.748102e-002, 3.185243e-002, 1.763693e-002, 2.348748e-002, 9.919230e-003, -1.578131e-002, 1.222723e-002, 1.139344e-002, -9.154086e-004, -4.044743e-002, 5.117787e-002, -3.245337e-002, 1.001436e-002, -5.163231e-002, 4.116758e-002, 1.076794e-001, -1.767713e-002, -7.953900e-002, -7.556844e-002, 4.067898e-002, -4.326788e-003, -8.855962e-003, -1.746334e-002, 6.272425e-003, 3.131532e-002, 2.826989e-002, 3.546211e-003, -7.165591e-003, 1.912343e-002, -1.012655e-002, 2.109202e-002, -1.471407e-002, 1.684280e-002, -5.497260e-002, 3.552481e-002, 3.298549e-002, -3.376035e-004, 4.404150e-004, -5.087394e-002, 8.148648e-002, 2.233578e-002,

© ISO/IEC 2004 — All rights reserved


Copyright International Organization for Standardization
Provided by IHS under license with ISO
No reproduction or networking permitted without license from IHS
Not for Resale

2.280735e-002, -2.445833e-002, 3.322423e-002, 5.742797e-002, -3.069884e-002, 8.056561e-005, -3.857255e-003, -4.713554e-003, 1.690608e-002, 1.917018e-003, -2.362773e-003, 1.450538e-002, 8.186664e-003, 7.625039e-003, -2.165974e-002, 3.293378e-002, 6.865963e-003, -2.322356e-002, 4.489740e-002, -4.180189e-002, 2.414959e-003, 2.402886e-002, -1.646655e-002, -2.731259e-002, 2.583966e-002, 9.117136e-003, -1.032086e-002, 1.541782e-002, 9.291547e-003, 1.222915e-002, -7.028426e-003, 2.806655e-003, 1.701775e-002, 4.311560e-003, -1.341695e-002, -2.567947e-003, 5.204099e-004, -4.900387e-003, 5.633720e-003, 1.672182e-002, 2.302913e-002, -5.771059e-002, 2.694712e-002, -8.532238e-003, 7.961073e-003, 2.415942e-002, 4.490815e-002, -3.418727e-002, 1.035765e-002, 4.615068e-002, -1.984411e-002, 8.327316e-003, -2.111980e-002, 3.919176e-003, 1.308910e-002, -1.905530e-003, -1.099222e-003, -1.878595e-003, 1.618264e-003, -5.242305e-003, 6.895575e-003, -7.230233e-003, 1.786075e-002, -8.358789e-003, -1.364526e-002, -9.691653e-003, 7.415303e-003, 3.142977e-002, -2.550052e-002, -8.237808e-002, 2.533612e-002, 2.147726e-002, 7.146289e-003, -6.500363e-004, 1.627848e-002, -8.036484e-003, -3.672787e-003, 7.469793e-003, 9.693779e-003, 3.189549e-004, 1.577682e-004, -1.164373e-002, -3.055063e-003, 4.767637e-003, 2.211154e-002, -6.152613e-003, -1.612743e-002, -1.378609e-002, 2.111275e-002, -6.936926e-003, 7.477265e-003, 5.096072e-002},

{-5.835450e-003, 9.523600e-003, -2.038304e-002, 1.974382e-002, 9.717971e-003, -1.443303e-002, 2.069060e-002, -1.305140e-002, 1.935101e-002, -2.710419e-002, -1.944595e-002, 2.296226e-002, 2.296226e-002, -1.944595e-002, -2.710419e-002, 1.935101e-002, -1.305140e-002, 2.069060e-002, -1.443303e-002, 9.717971e-003, 1.974382e-002, -2.038304e-002, 9.523600e-003, -2.934746e-002, -3.895242e-002, 6.159358e-002, -9.680956e-003, -1.514638e-002, 8.620744e-002, -2.574335e-002, 7.743991e-003, -3.875147e-003, 1.562440e-002, -2.391826e-002, -2.595829e-002, -9.122482e-003, 3.030555e-002, 8.040629e-002, -1.263306e-002, -2.696822e-002, -1.757266e-002, 1.378259e-002, 3.410855e-002, -6.486565e-002, 2.967229e-002, -7.446317e-003, 1.633684e-002, -2.171498e-002, -7.148113e-003, 9.245743e-002, -2.821603e-002, -3.159436e-003, 2.569339e-003, 3.502808e-002, -3.998194e-003, -2.854206e-003, 3.311070e-002, 1.653129e-002, 2.658351e-002, 1.446424e-002, -1.553262e-002, 1.239994e-002, 1.803926e-003, 4.186267e-002, 3.820654e-002, -9.102676e-002, 6.334747e-002, 5.330568e-002, -9.380685e-002, 7.954564e-002, -2.818082e-002, -8.523124e-002, -1.455192e-001, 1.042115e-001, -6.030583e-002, 2.816264e-002, 6.144161e-003, 4.062876e-003, -3.091906e-002, -5.738262e-002, -1.884880e-002, -4.122835e-002, -3.437776e-002, -2.267739e-002, -1.126516e-002, 1.496174e-002, 2.117521e-002, -1.321955e-001, 1.695375e-001, -3.720814e-002, -1.496825e-001, 9.324740e-002, -8.078725e-002, 1.100590e-001, 5.424090e-002, 5.649242e-002, -6.845135e-002, 3.109773e-002, 1.744073e-002, -1.749649e-002, -1.072832e-002, 2.914828e-002, 3.102677e-003, 2.350239e-003, -2.345469e-003, -2.730354e-003, 5.062278e-002, 7.490573e-003, -1.558629e-002, -4.541940e-004, 6.901829e-002, -6.906162e-002, 7.428603e-003, 8.621580e-002, -4.329114e-002, -7.277563e-004, -2.711062e-002, 8.075490e-002, -7.521357e-002, -3.990375e-002, 7.912257e-002, -3.799559e-003, 1.522138e-002, 6.714871e-002, -3.588580e-003, -8.798763e-003, -7.919996e-003, -3.029678e-002, -4.237572e-002, -3.291463e-002, 6.187137e-002, -8.974060e-003, -1.404918e-002, 2.008744e-002, 1.268826e-002, -8.656575e-002, 1.254913e-002, -1.216612e-003, -2.606131e-002, -1.500605e-002, 3.433575e-003, 2.782080e-002, -1.681290e-002, -6.902367e-002, -3.141866e-003, -1.468797e-002, -7.443839e-002, -4.252082e-002, -1.401262e-004, 1.837001e-002, 2.575218e-002, -2.915797e-002, -2.562850e-002, -1.387242e-002, 5.083745e-002, -8.640003e-003, -4.717498e-002, -6.775180e-003, 6.946647e-002, -2.900107e-002, 1.128684e-001, 3.969075e-002, -3.485386e-002, -1.858283e-002, -1.233248e-001, -2.788027e-002, 2.820360e-002, -2.421578e-003, -6.814451e-003, 2.706767e-002, 2.207515e-002, 2.070556e-002, 7.745312e-003, -1.184497e-003, -2.974635e-003, -1.792983e-002, 2.297261e-002, 1.055559e-002, 1.497283e-002, 1.635687e-002, -3.297418e-002, -1.028466e-001, 2.789847e-002, -8.192699e-004, 5.372484e-002, -7.668236e-002, -1.589829e-002, 3.415420e-002, -3.191049e-002, -5.729175e-002, 2.549494e-002, 4.144218e-002, -7.461861e-003, -3.429509e-002, -1.321168e-002, 1.337691e-002, 2.260402e-002, 3.361025e-004, -1.876913e-002, 1.793517e-002, 4.340148e-002, -2.587258e-002, -4.557724e-002, 1.883996e-002, 2.762151e-002, 1.996066e-002, -1.204545e-002, -6.121859e-002, 3.960327e-002, 3.585260e-002, -1.260407e-002, -5.428065e-002, 4.764593e-002, 3.416935e-002, -7.133734e-003, -2.469755e-002, 7.753165e-003, 3.992019e-002, 1.466792e-002, 3.129506e-003, 1.050607e-002, -1.319203e-002, -4.823379e-003, -5.521817e-003, 2.011221e-002, -6.939700e-003, -6.161295e-002, 4.088991e-003, 2.007834e-002, 8.750223e-003, 5.885422e-002, 3.427758e-002, -4.198886e-002, 6.624604e-003, 1.475021e-002, 1.506037e-002, -1.119534e-002, -1.613841e-002, 5.126511e-003, 3.498166e-002, 2.194219e-002, 9.271001e-003, -3.169241e-003, -8.425133e-003, -5.224100e-003, -1.157913e-002, 5.660950e-003, -1.459717e-002, 1.020729e-002, 2.561607e-002, -2.838806e-002, -3.521753e-002, 5.579527e-003, -8.516496e-002, 1.554522e-002, 3.618273e-002, -3.797411e-002, 5.186244e-003, 1.247400e-002, 7.961555e-003, 2.198793e-003, -1.533675e-003, 1.890607e-002, -1.287455e-003, -6.800459e-003, 4.896056e-003, -5.590545e-003, -2.302137e-002, -2.411132e-002, 7.134936e-003, -1.297767e-002, -6.144512e-003, 2.055413e-002, -2.878249e-002, 8.594197e-003, 3.124552e-002, 8.439537e-002, 6.844995e-003, -2.912019e-002, 2.047119e-002, -1.673544e-002, 2.383312e-002, 7.226660e-003, -2.698311e-002, 1.991716e-002, -3.492398e-003, 8.865654e-003, 3.683634e-003,


© ISO/IEC 2004 — All rights reserved

Copyright International Organization for Standardization
Provided by IHS under license with ISO
No reproduction or networking permitted without license from IHS
Not for Resale

2.466124e-003, 1.077663e-003, -2.058982e-002, -1.527109e-002, -1.722608e-002, 3.441116e-002, 1.094280e-002, -2.372875e-002, 4.871067e-003, -1.556854e-002, -6.353825e-002, -4.258330e-002, 2.078656e-002, -1.546072e-002, -5.433489e-003, 3.329901e-002, -2.113188e-004, -2.162118e-002, 8.293747e-003, 3.966565e-003, 4.823087e-003, -1.120846e-002, -2.762305e-003, -9.182835e-003, 2.469191e-003, -2.901520e-003, -1.783999e-002, -8.713337e-004, -4.637166e-003, 1.154717e-002, 2.246760e-002, -2.704094e-002, -2.004388e-002, 1.570362e-002, -6.852059e-017, -1.490107e-002, 1.725357e-002, 1.075187e-002, -2.451667e-002, 2.010074e-002, 1.128334e-002, -3.956367e-002, 2.641650e-003, 1.438120e-002, -1.333074e-002, 7.248324e-003, -7.248324e-003, 1.333074e-002, -1.438120e-002, -2.641650e-003, 3.956367e-002, -1.128334e-002, -2.010074e-002, 2.451667e-002, -1.075187e-002, -1.725357e-002, 1.490107e-002, 2.946481e-002, -3.049068e-002, 4.813883e-003, -1.763041e-002, 7.750653e-002, -5.169378e-002, 2.765471e-002, 3.645852e-002, 2.551879e-002, 7.820866e-003, 1.813526e-002, 6.596748e-003, -2.573793e-002, -2.158145e-002, 2.061707e-002, 2.249334e-002, -4.493874e-002, 2.206934e-002, -2.571123e-002, 3.527763e-002, -6.100887e-002, 5.378471e-002, 1.638300e-002, -1.149431e-001, 5.565567e-002, -6.861958e-002, -8.327035e-002, 1.865278e-002, -1.195511e-002, -1.820414e-002, 1.677771e-003, -1.710327e-002, 2.787631e-002, 2.216198e-002, 2.206062e-002, 9.452057e-003, -5.241625e-003, -2.171160e-002, -9.889564e-003, 4.978577e-002, -9.488158e-003, -9.347525e-002, 5.963332e-002, 3.140437e-002, -5.262974e-002, 3.504148e-002, 5.568659e-002, -1.251327e-002, 4.858875e-002, 8.514374e-002, 2.747534e-002, -1.488896e-002, 3.129978e-002, -2.364316e-002, 2.295176e-003, -2.298315e-002, -3.592055e-003, -3.493389e-002, -3.868737e-002, -1.807940e-002, -6.465882e-003, -1.868947e-002, -4.390003e-002, -1.146267e-002, 6.995734e-002, -1.182721e-001, 6.759852e-002, 2.657914e-002, -3.179633e-002, 9.361206e-002, -6.076471e-002, 1.641640e-001, -7.648073e-002, 3.806282e-002, 1.989659e-002, 3.013525e-002, 1.687590e-002, 2.439240e-002, 3.029540e-002, -4.417491e-002, -1.760288e-002, 2.322048e-002, -1.291587e-002, 1.016964e-002, 2.782120e-002, 2.717986e-002, 1.690005e-002, 8.335547e-004, 6.759638e-002, -8.158002e-002, 1.260690e-001, 1.402535e-003, -1.380113e-001, 8.554197e-002, -7.423041e-002, 1.296632e-001, -1.497681e-002, -7.958742e-002, -4.118461e-002, -1.029804e-002, 1.782486e-002, -2.650435e-002, -3.708968e-003, 3.445610e-002, 2.467622e-002, 2.547890e-002, -3.027298e-002, -2.819837e-002, 3.152396e-003, -3.751406e-002, -6.427813e-002, 6.356463e-002, 6.645569e-002, -1.569801e-001, 1.291013e-001, 1.158878e-001, -5.754669e-002, -1.502886e-002, 1.522436e-002, -5.877536e-002, 4.654028e-002, 3.736743e-002, -3.576049e-003, -1.918969e-002, -3.616467e-003, -7.687318e-003, -1.108236e-003, 4.361105e-003, 6.851604e-003, 2.928731e-002, -8.217917e-004, -2.766322e-002, 5.007380e-002, 7.557440e-002, -2.891927e-002, 2.453478e-002, 1.204995e-001, -1.080191e-001, 4.719389e-002, 8.745961e-002, -3.055110e-002, 3.602262e-002, 5.144628e-002, -3.719829e-002, -5.451539e-002, 1.839262e-003, 1.822128e-002, 6.479467e-003, 2.659932e-002, 2.172574e-002, -1.693714e-002, 4.864040e-003, -1.965621e-002, 2.902633e-002, 4.276788e-002, 1.015053e-004, 2.690704e-003, 1.733791e-002, -2.429623e-002, 4.430125e-003, 1.927202e-002, -8.580797e-002, -6.543397e-003, 4.207298e-002, -8.150355e-004, -6.427287e-002, -1.675452e-002, 7.081109e-002, 6.566899e-003, -1.146293e-002, -7.587505e-003, -8.545695e-004, 5.894807e-003, 3.016505e-002, -1.552861e-002, -2.727627e-002, -3.067440e-002, 2.889060e-002, 5.830016e-002, -3.887526e-002, 2.339620e-002, 1.508318e-002, 1.069443e-001, 2.144422e-002, 5.674926e-002, 3.327029e-002, -7.228578e-002, -2.917371e-002, -1.102734e-002, 4.250661e-002, 9.338791e-003, -4.401658e-002, -4.409673e-003, 2.355025e-003, 8.123507e-004, -1.160274e-002, 3.899394e-003, 2.634728e-002, 1.638422e-002, 8.027292e-005, -2.731570e-002, 2.087790e-002, 2.570515e-002, -1.375428e-002, -9.837644e-004, 3.483022e-002, 3.926234e-003, -3.102330e-003, -1.370683e-002, 2.227139e-002, -7.672498e-003, 2.954153e-002, -1.865190e-002, -3.874463e-002, 1.166020e-002, 1.337803e-002, -5.960497e-003, -7.972785e-003, 7.810799e-005, 1.350154e-002, -5.011575e-003, -3.130170e-003, -1.999745e-003, 8.421904e-003, -2.139250e-002, -9.479780e-003, 3.844687e-002, 3.643239e-003, 3.557709e-002, 3.055627e-002, 1.264850e-003, 1.806903e-002, 2.849067e-002, 1.012858e-004, -2.063227e-002, 1.538698e-002, 4.738055e-003, -1.401038e-003, 2.595972e-003, 1.801958e-002, 6.830188e-003, -4.885806e-003, 1.643496e-002, 2.657421e-002, 1.894002e-002, -1.415140e-002, -2.321652e-002, 7.654476e-003, -1.740142e-002, -1.529074e-002, 3.137107e-002, 3.150229e-002, -7.744992e-004, 3.790550e-002, 2.814856e-003, -2.946670e-002, 1.384051e-002, 1.925883e-002, -2.237565e-002, -5.949158e-003, 4.261268e-003, 8.535119e-003, -2.548932e-003, -3.568193e-003, 3.680557e-003, -5.665921e-003, -3.494456e-003, 1.151320e-002, -3.327012e-003, -1.805135e-002, -1.581386e-002, -5.891327e-003, 1.492861e-002, 1.814425e-002, 1.401256e-002, 5.235025e-003, -6.007092e-002, 3.247628e-002, 3.631182e-002, -1.134316e-002, 7.412082e-003, -1.418699e-002, -4.589219e-003, 1.433917e-002, 3.434091e-003, 6.050489e-003, 1.096257e-002, 8.033227e-004, 5.752620e-003, -1.524092e-004, -1.444589e-004, 8.620062e-004, -5.149947e-003, -1.464160e-002, -1.018372e-002, 2.987034e-002, 1.358136e-003, 1.781958e-002, 6.548898e-002},

{6.867450e-003, -1.033015e-003, -5.968390e-003, 1.854108e-002, -1.740995e-002, -2.216050e-002, -4.536868e-003, -2.950307e-002, 3.334522e-002, -4.395373e-002, 1.230789e-002, 1.373915e-002, 1.373915e-002, 1.230789e-002, -4.395373e-002, 3.334522e-002, -2.950307e-002, -4.536868e-003, -2.216050e-002, -1.740995e-002, 1.854108e-002, -5.968390e-003, -1.033015e-003, 2.062457e-003, -

© ISO/IEC 2004 — All rights reserved


Copyright International Organization for Standardization
Provided by IHS under license with ISO
No reproduction or networking permitted without license from IHS
Not for Resale

2.627554e-002, 2.400785e-002, -1.628010e-002, 1.275372e-001, -1.211735e-001, 2.920053e-002, 4.809947e-002, -4.005482e-002, -3.254455e-002, -1.361642e-002, 3.032918e-002, 1.136702e-003, -2.409114e-002, 1.556344e-002, -3.479295e-002, -8.361532e-003, 1.609349e-002, -5.208690e-002, -3.273649e-003, 1.143759e-001, 6.825765e-003, 5.556240e-003, 4.589856e-002, 3.270136e-002, -4.459178e-002, 1.776886e-002, -1.369020e-002, 6.753147e-002, 1.133224e-002, -6.571221e-002, -1.544094e-002, 1.461869e-002, -7.877749e-003, -5.943479e-002, -2.611183e-002, -2.933582e-003, -6.561594e-003, -1.731128e-002, -1.743658e-002, -2.464917e-002, 3.853726e-002, 8.928564e-003, 3.301165e-002, -1.310080e-001, 3.642220e-002, -1.010788e-001, -6.892817e-002, 1.825850e-003, 8.500320e-002, -1.307768e-001, 3.664267e-002, -1.318460e-002, -2.861569e-003, 4.691182e-002, -1.926390e-002, -4.348696e-002, 9.713473e-003, -1.391171e-002, -1.587477e-002, 1.791653e-002, 1.132803e-002, -7.798003e-003, -3.840425e-002, 4.011854e-002, 8.915953e-003, -1.096645e-002, -3.000907e-002, -7.477640e-002, 2.403695e-002, 1.355512e-001, -1.348496e-001, -3.045135e-002, 3.844884e-002, 2.112854e-002, -6.075306e-003, 1.293243e-002, -2.277981e-002, 1.299768e-002, 3.626102e-003, 3.605818e-003, 2.560835e-002, -1.664445e-002, -3.504199e-002, 7.937189e-003, 3.526178e-002, 7.915127e-003, -7.497320e-002, 3.338879e-002, -1.019641e-001, 6.342051e-002, -7.373045e-002, -1.364179e-002, 1.000810e-001, 4.676562e-003, 2.272080e-002, 4.273674e-002, -1.594588e-002, -1.496343e-002, 4.566176e-003, -2.253820e-002, -3.698665e-002, -1.705085e-002, -1.036399e-002, -3.410029e-003, 1.940237e-002, -2.074625e-002, -2.283884e-002, 1.514171e-002, 2.292237e-002, 1.323678e-002, 9.193841e-002, -2.380320e-003, 1.559516e-002, -1.709843e-002, -1.203499e-001, -1.436631e-001, 8.020669e-002, -1.133194e-002, -1.073798e-001, 6.005470e-002, 4.637362e-002, -6.293899e-003, -2.922689e-002, 6.739838e-003, 2.456995e-002, 3.615716e-002, 1.380976e-002, -1.175193e-002, 2.202419e-003, -1.380779e-002, -1.721010e-002, 2.219649e-002, 2.004041e-002, -4.211325e-003, -1.106775e-002, -1.361135e-001, 1.456961e-001, 1.077935e-001, -3.786146e-002, 5.753742e-002, -3.592345e-002, 5.608732e-002, 1.872832e-002, 3.055263e-002, -9.385316e-004, 1.487535e-002, 1.670641e-002, 3.090407e-003, -1.254320e-002, -7.600551e-003, 3.079831e-002, -3.077584e-003, 7.908245e-003, -3.749435e-003, -8.519920e-003, 4.024258e-003, -3.576653e-002, 1.935033e-002, -3.791416e-002, -3.819981e-002, -3.385306e-002, 2.693617e-002, -2.970618e-002, -4.633641e-003, 5.204790e-002, -2.299489e-002, -3.159533e-002, 1.944080e-002, -6.787950e-004, -6.733881e-003, -3.180810e-003, -1.607982e-002, 1.983892e-002, 2.915347e-003, 2.367309e-002, -1.440455e-002, -2.403146e-002, -2.727409e-002, -4.453316e-003, 4.708075e-002, -1.607636e-002, 4.941716e-002, -3.449076e-002, 4.396748e-002, -2.148270e-002, -5.969340e-002, 6.980914e-002, 1.014222e-002, -1.919428e-002, -1.243842e-002, -1.017564e-002, 1.393955e-002, 7.060207e-003, -8.486513e-003, -8.522192e-003, 3.795175e-003, 2.553225e-002, -1.564084e-002, -9.790079e-003, 1.387643e-004, -8.458382e-003, -2.131681e-002, 1.461080e-002, 1.988369e-002, -8.662063e-003, 8.580258e-003, 1.772313e-002, -1.398242e-002, -2.249613e-002, 7.842136e-002, -4.687442e-003, -1.457838e-002, 1.533965e-002, 4.416599e-003, -3.881760e-003, -3.921628e-003, -8.992240e-003, 2.442689e-003, 1.770719e-003, 3.447074e-003, 9.562343e-003, 2.719283e-003, 4.205173e-003, 2.787035e-002, 2.901794e-003, -1.409713e-002, 6.912939e-003, -6.141366e-003, -2.330725e-002, -1.028442e-001, 4.234717e-002, -5.163502e-002, 1.532205e-002, 1.251288e-002, 3.013236e-002, 1.289652e-002, 2.504085e-003, -9.668924e-003, 1.157997e-002, 4.355289e-003, 2.723816e-003, -8.511035e-003, -5.818855e-003, -6.419539e-003, 3.791938e-003, 1.546663e-002, -1.394768e-002, -2.330782e-002, 3.390028e-002, -2.944193e-002, -2.598847e-002, 3.888597e-002, 4.893082e-002, -3.836308e-002, -3.490642e-002, 4.055104e-002, -3.347041e-003, -1.224161e-002, 6.615090e-003, 9.940123e-003, 5.703818e-003, -9.320180e-003, -2.633272e-003, 1.027936e-002, 3.717659e-003, 9.657935e-003, -3.337639e-003, -9.969977e-003, 6.798393e-003, 2.979285e-002, -1.741877e-002, -3.512360e-002, 3.484767e-002, -2.496154e-002, -5.966605e-002, -2.922922e-002, -2.456905e-002, 3.116220e-002, 1.740325e-002, -3.367173e-002, 1.943793e-003, 6.430674e-003, -1.111183e-004, 1.014593e-002, -2.795853e-004, 4.391991e-003, 7.692726e-003, -1.018820e-002, -3.412660e-003, 9.949484e-003, 5.657782e-003, -5.735705e-003, -1.207900e-002, 1.358955e-002, -1.183763e-002, -3.198453e-002, -1.474018e-002, 2.421646e-002, -6.234741e-018, -3.680239e-003, 1.166984e-002, -1.547229e-002, 2.129698e-002, -4.616272e-002, 5.899402e-002, -5.461448e-002, 2.523651e-002, -1.644593e-003, -4.155910e-002, 6.157765e-003, -6.157765e-003, 4.155910e-002, 1.644593e-003, -2.523651e-002, 5.461448e-002, -5.899402e-002, 4.616272e-002, -2.129698e-002, 1.547229e-002, -1.166984e-002, 3.680239e-003, -1.090785e-002, 9.377538e-004, 6.156136e-002, -1.243635e-001, 1.935099e-002, 1.457893e-002, -5.773115e-003, -6.433556e-002, 1.302559e-002, -7.787130e-003, -2.197189e-002, -4.201269e-002, 2.820007e-002, -3.034330e-002, 6.837148e-003, 2.758986e-002, -1.132409e-002, -9.771427e-002, 6.526741e-002, 2.276043e-002, -9.014141e-002, 3.524388e-002, -5.053033e-002, 4.457641e-002, -2.168606e-002, -1.543538e-002, 4.373147e-002, -1.188549e-001, 1.742618e-001, -1.273284e-001, 4.009620e-002, -6.313737e-002, -2.646432e-002, -1.487788e-002, 3.449883e-003, -2.400679e-002, -6.962076e-003, 3.584197e-003, -3.392099e-004, -3.277102e-002, -4.241843e-002, 6.089872e-002, 4.918345e-002, -1.041809e-001, -3.116997e-002, 5.041227e-002, -4.258527e-002, 6.710870e-002, -2.117887e-002, -3.790771e-002, -4.067426e-002, 6.510499e-004, 2.736326e-002, -1.519239e-002, 5.497842e-002, -9.322058e-003, 1.232649e-002, 3.187771e-002, 1.684428e-002, 1.587883e-002, -6.963582e-003, -3.070230e-002, -2.009050e-002,


© ISO/IEC 2004 — All rights reserved

Copyright International Organization for Standardization
Provided by IHS under license with ISO
No reproduction or networking permitted without license from IHS
Not for Resale

3.610418e-002, -5.228685e-002, -6.009556e-002, -2.878315e-002, 2.084417e-002, -8.243783e-002, 7.960576e-003, -2.659652e-002, 7.795413e-002, -4.239804e-002, 1.111354e-002, -2.819442e-002, -4.236921e-002, 5.886127e-002, 1.422596e-002, 2.262825e-003, -2.855435e-002, -1.453486e-002, -3.378776e-002, 7.941813e-003, 2.269151e-002, 2.088336e-002, -4.742333e-003, 7.888203e-003, -4.277434e-002, -1.185643e-002, -4.924594e-002, 5.257201e-002, -1.103141e-001, -9.244036e-002, -1.462300e-001, 7.614534e-002, -4.818645e-002, 4.844274e-002, -1.382396e-002, -6.260864e-003, -8.522908e-003, 7.692791e-003, -6.189665e-003, 2.262166e-002, 2.758516e-002, 4.759070e-003, -1.941957e-003, 6.218193e-003, 8.561770e-003, 4.989953e-003, -7.051873e-002, 5.383917e-002, -1.248101e-002, 1.135515e-001, -1.281579e-001, 1.949009e-001, 1.651404e-001, -8.425757e-002, 1.163763e-002, -8.926399e-003, 4.947802e-002, -3.930378e-002, 1.805431e-002, -5.754029e-002, -1.691897e-002, 7.516046e-003, 4.895488e-003, -2.534637e-002, 2.507907e-002, -7.615022e-003, -2.074115e-002, 1.410162e-003, 4.063619e-003, 4.808046e-002, -3.955779e-002, 3.600081e-002, 5.804411e-003, -4.721285e-003, -2.192249e-002, -1.296992e-002, 6.692681e-002, -7.049773e-002, 1.254829e-002, -3.892061e-002, 5.793147e-002, -9.527716e-003, 4.002918e-002, 1.711016e-002, -2.407588e-002, -8.425186e-003, -1.899697e-003, -6.523013e-003, 2.357720e-002, 2.129332e-002, -9.824043e-003, 1.492178e-002, 1.391191e-002, 6.159404e-002, 2.720079e-002, -2.482703e-002, 4.051091e-002, -1.490875e-001, -1.078091e-002, -1.877943e-002, 2.722477e-003, 3.012997e-002, -4.089951e-002, -1.656769e-002, 4.762602e-002, -6.356407e-003, -2.688022e-002, -5.544586e-003, 1.952907e-004, 3.682928e-003, -8.048416e-003, -7.030651e-003, 1.289445e-002, 4.296011e-002, -1.022865e-003, -2.458681e-002, 5.937471e-003, 1.836783e-002, -4.451524e-002, 1.554651e-002, 1.565497e-002, -5.342745e-002, 8.143168e-003, 2.136389e-003, 1.129067e-002, 2.836229e-003, -1.128999e-002, -1.138582e-002, 2.238552e-002, -2.433893e-002, -1.598252e-002, 1.167879e-002, -6.524019e-003, -1.108079e-002, 5.820563e-003, 1.887085e-002, -6.683810e-003, -1.034137e-002, 1.141501e-002, -3.061064e-002, 2.536225e-002, 2.792599e-003, -2.196226e-004, 7.872329e-002, -5.726449e-002, 1.793771e-002, 2.062098e-002, 2.318799e-002, -3.452219e-002, 2.171676e-002, -2.405064e-003, -2.323579e-002, 3.486915e-003, 1.199286e-002, -4.469909e-003, 7.412327e-003, -1.380165e-002, -9.093565e-003, -9.390639e-003, 9.444787e-003, -6.743689e-004, -1.951959e-002, 3.182316e-002, 2.137878e-002, -1.763957e-002, 1.566675e-002, 7.166567e-002, 6.953545e-003, 1.183820e-002, -3.497969e-002, 3.389760e-002, 2.885605e-002, 7.013580e-004, 2.106056e-002, -1.607236e-002, -1.021379e-002, 1.165587e-002, 6.856750e-003, -1.195494e-002, 7.534165e-003, -1.641417e-002, -2.799845e-003, -6.441476e-003, 5.409990e-003, 2.941369e-002, -2.016500e-002, 1.968459e-002, 1.949271e-002, -5.784257e-003, 4.082556e-003, -1.487142e-002, -4.225445e-002, 2.509208e-002, 2.080759e-002, -1.522734e-002, 2.660789e-002, -5.864226e-004, 6.452464e-003, -7.467809e-003, -1.003359e-002, 6.068572e-003, 1.127836e-002, 5.183736e-005, -3.155644e-003, -4.650342e-004, -1.133261e-003, -2.194945e-002, 2.562773e-002, 2.696279e-002, 4.877336e-003, 7.600258e-003, -1.663936e-002, 2.844721e-002, -3.129334e-002, 1.045448e-003, 1.462906e-002, -1.771381e-002, 4.191732e-003, 2.614549e-002, 8.146249e-003, -1.717293e-002, -9.754375e-004, 7.166677e-003, 8.477053e-003, 1.510764e-003, 5.617543e-003, -8.327428e-003, -3.836271e-003, 3.617091e-003, 1.402385e-002, -9.806911e-003, 7.992268e-003, 1.645778e-002, -9.928353e-003, -7.642020e-003, 1.844154e-002},

{-1.815172e-003, 3.435103e-004, -7.889918e-003, 1.891177e-002, -2.408569e-002, 3.108756e-002, -3.037833e-002, 8.843824e-003, -1.123316e-002, 2.087812e-002, -2.401440e-002, 1.269795e-002, 1.269795e-002, -2.401440e-002, 2.087812e-002, -1.123316e-002, 8.843824e-003, -3.037833e-002, 3.108756e-002, -2.408569e-002, 1.891177e-002, -7.889918e-003, 3.435103e-004, -1.335183e-002, -5.757769e-002, 1.577607e-002, -2.557344e-002, -1.926429e-002, 5.485744e-002, -4.871950e-002, -3.614168e-002, 2.075970e-002, -5.362710e-002, 2.603251e-002, -2.738673e-002, -1.500666e-002, -1.485174e-002, -3.697213e-002, 1.347171e-002, -4.418987e-002, 7.283822e-003, -6.439992e-003, 4.658531e-002, -2.793492e-003, -3.547362e-002, 3.229846e-002, 2.869464e-002, -8.122980e-003, -4.155901e-002, -2.771075e-002, -4.208912e-003, -4.549494e-002, -5.292027e-002, 8.815868e-003, -8.189801e-002, -2.189800e-002, -5.292641e-002, 8.464334e-004, 1.475319e-002, 3.579493e-002, 1.602067e-003, -5.092202e-003, 3.499359e-002, 2.363542e-003, -6.195657e-002, 1.221693e-001, -2.435488e-002, 2.028633e-002, -4.695942e-002, -6.192135e-003, -3.014837e-002, 7.019671e-002, 2.808561e-002, -3.936677e-002, 1.202732e-002, 2.592944e-002, -3.580642e-003, -7.419081e-003, 2.062821e-003, 5.898465e-002, 2.394410e-002, 1.492851e-002, 6.973705e-003, 6.552870e-003, -4.748072e-002, -2.088065e-002, 2.075328e-002, 5.137052e-003, 9.748076e-002, -1.674217e-001, 1.264326e-003, 7.992105e-002, 4.319778e-002, -5.186602e-002, -1.019809e-001, 8.987525e-002, -6.628617e-002, -2.236664e-002, 2.705975e-002, -5.128604e-002, -6.417844e-003, 4.607619e-002, 1.973452e-002, 1.449110e-003, -2.418624e-002, 8.602934e-003, 2.760735e-002, 2.427311e-002, -6.731362e-002, 5.558708e-002, 5.069347e-002, -1.343784e-001, 7.420737e-002, 4.692364e-002, -1.221349e-001, -3.078905e-002, 9.803988e-002, -6.383799e-002, 1.233088e-002, -1.731825e-003, -1.876815e-002, -4.018773e-002, 4.488943e-002, -9.350034e-003, 1.022592e-002, 1.532673e-002, 2.483527e-002, -9.115117e-005, -5.012276e-002, 1.967080e-002, -3.303323e-002, 3.104060e-003, -2.830043e-002, -7.401729e-002, 5.432622e-002, 3.506854e-002, -6.984875e-003, 6.248683e-002, 1.989052e-003, -1.219747e-001, 2.505008e-002, 4.946541e-002, -1.697482e-003, 3.622368e-002,

© ISO/IEC 2004 — All rights reserved


Copyright International Organization for Standardization
Provided by IHS under license with ISO
No reproduction or networking permitted without license from IHS
Not for Resale

3.740460e-003, -1.879582e-002, 1.173868e-002, -1.875516e-002, 1.702217e-002, 1.028281e-002, 2.269926e-002, 1.321080e-002, -4.808559e-002, 1.906591e-002, -5.813811e-003, 3.229245e-002, 4.612719e-002, -3.096583e-002, -2.789226e-002, -7.038478e-002, 2.369749e-002, -6.543835e-002, 3.719252e-002, -1.815378e-002, 2.637706e-002, -9.357671e-003, -3.328051e-002, -4.596856e-002, -2.049566e-002, -2.622025e-002, 3.998874e-002, 1.110822e-003, -5.619739e-003, 1.736124e-002, 6.431672e-003, 3.166772e-002, -1.137892e-002, -1.047828e-002, -3.640413e-002, 2.561287e-002, -3.552982e-002, 3.022356e-003, 1.737513e-002, -2.416401e-002, 4.947030e-002, -3.399512e-002, 4.821934e-002, -5.781766e-002, 3.562970e-002, -2.414747e-002, -4.583438e-002, -2.832813e-002, 3.546746e-003, -3.217295e-002, 1.878397e-002, 3.582163e-003, -1.324966e-002, 1.966974e-002, 8.008869e-003, 6.620437e-003, -2.253978e-002, -4.645828e-003, -2.458921e-002, 9.600953e-002, -1.498710e-002, -4.707370e-002, 5.950177e-003, 4.491811e-002, -4.489983e-002, 3.792665e-002, -2.814385e-002, 4.747838e-003, 3.419680e-002, 5.111256e-003, -1.725001e-002, -1.134666e-002, 1.756576e-002, -1.087124e-002, -9.402822e-003, -9.451101e-003, -1.356508e-002, -1.048356e-002, -2.426955e-002, 9.304714e-003, -5.191610e-003, 2.970434e-002, 2.289380e-002, 3.213274e-002, -1.016990e-002, -3.519223e-002, -3.775565e-002, 4.890699e-002, -2.938853e-002, -4.521557e-002, 5.162451e-002, -2.076097e-002, -1.863210e-002, 2.115706e-002, 5.849376e-003, -8.167727e-003, -1.767305e-002, -1.171009e-002, 8.073757e-005, 1.487229e-003, -1.756816e-002, -2.684848e-003, 2.797665e-003, -2.187751e-003, 3.894520e-003, 1.905801e-002, -1.186427e-002, -1.490506e-002, 9.203660e-003, 7.522582e-002, -4.218014e-002, 3.875390e-003, 1.244604e-002, -3.279305e-002, -2.363214e-002, 3.757803e-002, 2.714091e-002, 7.029803e-005, -1.724817e-002, -2.490995e-003, 1.754072e-004, 1.016265e-002, 4.263928e-004, -4.817183e-003, -1.846126e-002, 8.696407e-003, 5.375102e-002, -6.818114e-003, -1.578590e-002, -5.997509e-003, -1.380127e-002, -2.136306e-002, -4.272121e-002, 3.867850e-002, -8.065059e-003, -2.540725e-002, -2.098611e-002, 1.899777e-002, -3.936571e-003, 5.527880e-003, 8.969790e-003, 4.612611e-003, -1.932264e-002, -3.864781e-003, -8.409678e-003, -5.988734e-003, -1.682469e-003, -3.958660e-003, 2.270461e-003, -9.673948e-003, 1.467813e-002, -1.600170e-002, -1.872978e-002, 1.264740e-002, 1.380851e-002, 5.077176e-003, -1.689315e-003, -2.164483e-002, 2.245442e-003, 1.526145e-002, -3.270119e-002, 5.689155e-004, 1.409605e-002, 1.115989e-002, -8.433854e-003, 1.548855e-003, 6.092272e-003, 3.390732e-003, 7.259812e-003, -7.772834e-003, -1.708485e-003, -4.944152e-003, 1.571305e-002, -2.498808e-002, 1.036675e-002, 2.205146e-002, -1.909255e-002, -6.089813e-003, 1.329436e-017, -1.117328e-003, -3.712430e-003, 2.778250e-002, -4.184533e-002, 9.512921e-003, 2.609155e-003, 4.663753e-003, -1.947956e-003, 2.406172e-002, -3.417413e-002, -6.551775e-003, 6.551775e-003, 3.417413e-002, -2.406172e-002, 1.947956e-003, -4.663753e-003, -2.609155e-003, -9.512921e-003, 4.184533e-002, -2.778250e-002, 3.712430e-003, 1.117328e-003, -1.486525e-003, 5.449286e-002, -7.669782e-003, 5.829485e-003, 1.282648e-002, -1.580507e-002, 1.141023e-002, -1.764667e-002, 2.171861e-002, 2.345153e-002, 4.366595e-002, 4.662802e-003, 2.758930e-002, -2.054812e-003, -1.337642e-002, -1.384556e-002, -2.981515e-002, 3.012417e-002, -5.809999e-002, 1.289288e-001, -1.065456e-001, 1.658796e-002, -3.570991e-002, -2.306673e-002, 5.099943e-002, 1.496249e-002, 8.082093e-002, -4.505879e-002, 1.498203e-002, 3.233118e-003, 3.879277e-002, -2.626285e-002, -2.679521e-003, -3.103824e-004, 6.212650e-003, -6.439782e-005, 4.373492e-002, 1.898854e-002, -3.832902e-002, 2.175336e-002, 1.651081e-002, 3.877327e-002, -9.343481e-002, 2.303424e-002, 1.805475e-002, -5.261991e-002, 1.577399e-002, -1.445039e-001, -4.401354e-002, -3.254452e-002, 3.722308e-002, -8.398042e-002, 1.134346e-003, -6.576769e-003, -1.495191e-002, -2.369916e-002, -2.738023e-002, -3.541165e-002, 1.000639e-002, 4.960045e-002, 5.971547e-002, 3.169209e-002, -5.172733e-002, 3.816249e-002, -8.701382e-002, 7.557221e-002, -3.466673e-002, -7.012244e-002, 8.195658e-002, -8.975457e-003, 8.866804e-002, 2.921245e-002, 1.142443e-001, -1.964220e-001, 1.263515e-001, -3.064037e-003, -3.108067e-002, 4.068767e-002, 3.126085e-003, -1.363431e-002, -1.677977e-002, -7.156024e-003, -3.714767e-002, 2.109679e-004, 2.973407e-002, 3.095463e-002, -8.899080e-002, 1.132417e-001, -2.806653e-001, 1.254937e-001, 1.726031e-001, 7.061402e-003, 3.490058e-003, -3.987677e-002, -5.565409e-002, -8.641491e-002, 1.841560e-001, -5.900260e-002, -1.209089e-002, -4.144884e-003, -2.374475e-002, -1.614624e-002, -4.450740e-003, 1.967563e-002, 1.688066e-002, 2.334874e-002, -9.493812e-004, -8.661049e-003, -4.342673e-002, -1.787407e-002, 3.499660e-002, 1.129403e-001, -3.532389e-002, -1.923170e-001, -7.572511e-002, -7.340310e-003, 1.152981e-002, 3.609216e-002, 2.105761e-002, -2.157506e-002, -4.413210e-003, -4.567559e-003, 4.394111e-002, -6.811402e-004, -4.073442e-003, 4.604044e-002, 2.101861e-002, -8.199102e-003, 1.252213e-002, 3.160229e-002, 3.767370e-002, 5.855913e-002, 1.084495e-002, -3.265903e-002, 1.923412e-003, 1.781606e-002, 1.571903e-002, -4.127738e-002, 8.170224e-002, -1.332469e-002, -2.509012e-003, 7.090050e-002, -5.299709e-002, -3.585501e-002, -2.521792e-003, -1.261180e-002, 1.481603e-002, 2.270627e-002, 2.899587e-002, 2.692551e-002, 4.460475e-003, -1.138147e-002, -2.617285e-002, 7.453319e-003, 3.029010e-002, -2.238724e-002, 9.463537e-003, -2.059243e-002, -7.869916e-004, 8.849803e-002, -7.588930e-002, 9.196986e-003, -4.062143e-003, 3.693070e-002, -6.059208e-003, -1.587461e-002, -5.730026e-002, 1.921572e-002, -6.502251e-005, -1.256756e-002, 2.836385e-002, 3.105161e-002, -2.263413e-002, -3.971040e-003, 9.408434e-003, 5.136504e-003, -9.670285e-003, -1.598679e-003, 5.320226e-002, -3.250367e-002, -8.888400e-003, -2.511203e-002, 3.360833e-002, -



--`,,```,,,,````-`-`,,`,,`,`,,`---

© ISO/IEC 2004 — All rights reserved

Copyright International Organization for Standardization
Provided by IHS under license with ISO
No reproduction or networking permitted without license from IHS

Not for Resale

3.443469e-002, -3.889223e-002, 5.408499e-002, -6.830749e-003, -2.865743e-002, -6.847679e-003, 2.621268e-002, -5.151160e-002, 2.922709e-003, 2.127484e-002, 1.604888e-002, -8.243881e-003, 8.169524e-003, -6.354699e-003, -1.465946e-003, 1.940850e-002, -5.158058e-003, -1.566607e-002, -2.006319e-002, 2.915544e-003, 2.675407e-002, 1.812919e-003, 4.965513e-002, 2.974730e-003, 3.377051e-003, -2.619846e-003, -2.900125e-002, 5.019838e-002, 1.012193e-002, -1.794933e-002, 2.150230e-002, -1.097443e-002, -1.234735e-002, -1.445708e-002, 7.830396e-004, 1.231987e-002, -3.681206e-003, 1.082003e-002, -2.794848e-003, -2.531809e-002, -2.001939e-002, 1.194063e-002, 6.983592e-003, 2.001026e-002, 3.170120e-002, -3.428347e-002, -7.462651e-003, 1.309187e-002, 1.660334e-002, 1.954139e-002, -3.501842e-002, -1.083344e-002, 1.399234e-002, 2.046964e-002, -6.307924e-003, -2.360680e-002, -7.777896e-004, 3.251558e-003, 4.022919e-003, 5.314035e-003, 2.475311e-004, 1.039307e-002, -1.558312e-002, -2.577352e-002, 1.168050e-002, 2.921293e-002, 1.297342e-002, -5.778049e-003, 1.837330e-002, -7.389890e-004, 1.870365e-002, 3.082186e-002, -4.377724e-002, -9.633993e-003, 7.371760e-003, 2.130044e-002, -1.510310e-002, 1.533797e-002, 1.011208e-002, -1.878132e-002, 2.626357e-003, 3.712357e-003, -9.841644e-003, 5.036640e-003, 6.322894e-003, 4.554919e-003, -7.185829e-003, -1.260350e-002, 2.012866e-002, 1.415523e-003, 1.120307e-002, -2.689880e-002, 6.531330e-003, 2.923660e-002, -4.588907e-003, -8.062994e-003, 2.130707e-002, -1.942651e-002, -7.121086e-003, 3.842848e-002, -1.518961e-003, -2.057846e-002, -5.855534e-003, 9.443525e-003, 6.913659e-003, 4.020524e-003, 5.337721e-003, 6.566206e-004, -9.262398e-003, -1.584870e-002, 2.235506e-002, 1.026307e-002, -1.463079e-002, 2.538996e-003, 7.664572e-003, -4.552241e-005},

{8.477044e-003, -1.491849e-002, 2.902809e-002, -2.827212e-002, 2.671407e-002, 5.231352e-003, -1.413429e-002, -1.244394e-002, 4.004767e-002, -2.499208e-002, -1.845002e-002, 7.893746e-003, 7.893746e-003, -1.845002e-002, -2.499208e-002, 4.004767e-002, -1.244394e-002, -1.413429e-002, 5.231352e-003, 2.671407e-002, -2.827212e-002, 2.902809e-002, -1.491849e-002, -2.501012e-002, 1.901534e-002, 6.353096e-002, -5.594144e-002, 1.222615e-001, -1.217033e-001, 5.780511e-002, -5.251395e-003, -3.309906e-002, -1.000466e-002, 2.040702e-002, 5.119018e-002, -4.316742e-002, 2.792116e-003, 4.035100e-003, -2.853593e-002, -2.067993e-002, -2.958585e-003, -1.015016e-002, -3.129991e-002, 5.873457e-002, -2.381546e-002, 3.941743e-002, 2.732031e-002, 3.841825e-002, 4.006574e-002, -1.143846e-001, 1.751653e-001, -2.798112e-002, -7.041976e-002, 6.434302e-002, 3.368959e-002, -9.494232e-003, 5.590412e-003, -2.619072e-002, 2.289125e-002, 1.519130e-002, 2.150587e-002, 4.172837e-002, 4.483994e-002, -2.446416e-002, 5.570424e-002, -3.397848e-002, 1.103525e-001, 8.552578e-002, -7.448010e-002, 1.118505e-001, -4.627344e-002, 9.029123e-002, -1.293521e-002, -7.521024e-002, 3.479574e-002, 7.789662e-002, -3.738869e-002, -1.816835e-002, -4.721800e-003, 1.428597e-002, 8.202304e-002, 1.652185e-002, 3.803797e-002, -2.128950e-002, -2.813945e-002, -4.734093e-002, -3.668792e-002, 2.432780e-002, -2.904785e-002, 3.410530e-002, -9.479307e-002, 1.047697e-002, 7.127905e-002, -4.256267e-003, 4.522390e-002, -4.392309e-002, 7.226653e-002, -4.179480e-002, -4.046065e-003, 2.793150e-002, -7.367284e-003, 3.112913e-002, 1.716764e-002, -2.701918e-002, -6.561283e-002, -7.930459e-002, -3.094832e-002, -4.321768e-002, 1.644669e-002, 1.399542e-002, -1.127403e-002, 1.239241e-001, -6.765692e-002, -4.730957e-002, 6.222567e-002, -4.855691e-002, -1.185378e-001, 8.802803e-002, -1.627736e-002, 6.873785e-002, 3.498571e-002, 2.103451e-002, 4.299171e-002, 5.866444e-003, 2.451497e-002, 7.455018e-003, 1.770027e-002, -1.993204e-002, 8.038037e-003, -5.815750e-003, -1.056690e-002, 4.003038e-003, -9.935013e-003, -4.239010e-002, -2.231737e-002, 2.355680e-002, -4.333380e-002, 7.058988e-002, -1.888413e-001, -4.463299e-003, 5.423292e-002, 3.288882e-002, -9.247771e-002, -1.364229e-002, 1.142864e-002, -6.022886e-002, 2.224318e-003, -2.013380e-003, -1.816960e-002, -1.167187e-002, -3.474841e-002, -5.369054e-002, 5.486628e-004, 2.742685e-002, -1.273538e-002, 2.413156e-002, 2.150568e-002, -5.993276e-002, -8.557004e-004, 1.389973e-001, 3.515783e-002, 1.380765e-001, -3.784044e-002, -1.075532e-001, 6.674380e-002, 2.023441e-002, 8.744417e-003, 3.916843e-003, -2.126908e-002, -2.359858e-002, 5.696558e-003, 2.220178e-002, -1.106673e-002, -2.301608e-002, -3.491103e-002, 6.983583e-003, 1.119647e-003, -6.428738e-003, 1.465901e-002, 4.298086e-002, 5.463492e-002, -8.963989e-003, -9.908355e-002, -1.907601e-002, -8.317086e-002, -1.200744e-002, 6.584515e-002, -1.980741e-002, -1.493579e-002, 3.794460e-002, -8.974515e-003, -3.466137e-002, -9.092795e-003, 6.257309e-003, -2.343890e-002, -2.327226e-003, 1.999666e-003, -3.500693e-002, -2.869050e-002, 1.169547e-002, 1.594983e-003, -2.002116e-002, 5.292160e-002, 2.385376e-002, 7.499972e-002, -4.985382e-003, 6.838493e-002, 2.820126e-002, 2.671010e-002, -5.756909e-002, 3.783292e-002, -2.169235e-002, 9.439350e-003, -1.013476e-002, -1.036164e-002, 2.158376e-002, -2.546935e-002, 1.618055e-002, -1.184440e-002, 1.414949e-002, 4.862288e-004, -1.299278e-002, -2.584115e-003, 3.912867e-004, 1.814873e-003, -6.046913e-003, 2.978728e-002, 2.880501e-002, 2.075623e-002, -3.223357e-002, -3.464999e-002, 4.378771e-002, -2.415260e-002, -2.241912e-003, 1.268900e-002, -1.089254e-002, 2.101430e-002, -2.687900e-002, 4.286818e-003, 2.410380e-002, -1.048404e-002, 9.190133e-003, 1.773341e-002, 1.486934e-002, 8.717986e-003, -8.990715e-005, 2.633526e-002, 2.039605e-002, -1.616853e-002, 1.685442e-002, -3.243874e-003, -2.240385e-003, -3.712909e-002, 8.531841e-003, -3.219344e-002, 4.415288e-002, -3.212704e-002, 1.124486e-002, 3.150529e-002, -5.882553e-002, 1.391605e-002, 3.847053e-002, -1.986183e-003, -1.431219e-002, -

© ISO/IEC 2004 — All rights reserved


Copyright International Organization for Standardization
Provided by IHS under license with ISO
No reproduction or networking permitted without license from IHS
Not for Resale

9.934138e-003, 1.090280e-004, 4.893132e-004, -1.490480e-002, 2.063214e-002, 2.361169e-002, -2.861657e-002, 1.250321e-003, -1.023327e-003, -6.937275e-003, -1.390158e-002, 3.492294e-003, 1.784198e-002, 4.272409e-003, -3.348235e-002, 5.807306e-002, -2.167854e-002, -1.688591e-002, 9.399235e-003, 6.389265e-003, 9.435994e-003, -1.350884e-002, -1.122996e-004, 1.196057e-002, 1.389104e-002, 4.014475e-003, 6.040749e-004, -1.124295e-002, 1.073357e-002, 1.756176e-002, -3.436382e-002, -9.401106e-003, 2.437778e-002, -7.321479e-004, -2.296179e-002, -4.261879e-003, 2.770225e-002, 9.932242e-003, -2.424332e-002, 5.581691e-003, -1.462620e-003, -1.320538e-002, 3.144664e-003, 8.703815e-003, 2.604455e-003, -6.318833e-003, -1.987492e-003, -4.044120e-003, 9.509525e-003, -3.668188e-003, 3.680485e-003, 2.139009e-003, -2.367108e-002, -9.728876e-003, -1.674098e-003, -1.236850e-002, 2.553892e-002, -3.336431e-003, -2.272479e-017, -1.135465e-002, 2.673825e-002, -4.105772e-002, 3.973347e-002, -2.308179e-002, 1.876173e-002, 6.690909e-003, -2.907079e-004, -2.153891e-002, -1.042720e-002, 2.990191e-002, -2.990191e-002, 1.042720e-002, 2.153891e-002, 2.907079e-004, -6.690909e-003, -1.876173e-002, 2.308179e-002, -3.973347e-002, 4.105772e-002, -2.673825e-002, 1.135465e-002, 4.792950e-003, 4.655723e-002, -3.880911e-002, -1.226495e-001, 1.223160e-001, -6.145474e-003, -1.222774e-002, 4.788310e-003, 2.062462e-002, 1.725260e-003, -1.117968e-003, 4.829189e-003, 3.123750e-003, -4.850393e-002, 6.585138e-003, 1.375323e-002, 1.658370e-002, -6.812298e-002, 3.904414e-002, -1.053270e-002, 1.294670e-002, -1.068742e-002, -1.179473e-002, -1.481318e-002, 1.385849e-002, 8.167260e-002, 2.694691e-002, -1.056455e-001, 2.972024e-002, 1.060041e-001, 1.421344e-002, -4.274966e-002, 1.997757e-002, 6.497594e-002, 2.988377e-002, 2.430495e-002, 4.071457e-003, -5.636354e-002, -1.117758e-002, -1.397771e-003, 2.940153e-002, 1.642585e-002, 1.859113e-002, 6.708193e-002, -9.395504e-002, 4.577051e-002, 1.935691e-002, -6.144439e-002, -1.153425e-002, 9.879693e-002, -6.490174e-002, 2.909775e-002, -2.226044e-002, 1.495539e-002, 5.143174e-002, 3.095464e-002, 1.064659e-002, 5.682178e-003, 2.669295e-002, 2.426120e-002, 3.462270e-002, 6.013829e-003, 3.799160e-002, 5.024714e-002, -2.026507e-002, 8.037869e-002, -2.982806e-002, -2.605422e-002, 9.481246e-002, 6.952537e-002, -4.402814e-002, -4.378904e-002, -1.741126e-002, -6.200660e-002, 8.722414e-002, -4.929033e-002, 3.531063e-002, 1.781120e-002, 2.430592e-002, 5.687620e-003, 1.622162e-002, -2.812832e-002, -1.118180e-002, -2.426313e-002, 1.210856e-003, -2.667039e-002, -4.890746e-002, 6.788971e-002, -6.013059e-002, -1.296885e-001, 4.410539e-002, 3.194185e-002, -1.558462e-001, 8.262232e-002, -7.359124e-002, 1.423920e-001, -2.385024e-002, -2.949024e-002, 1.668933e-002, -1.369158e-002, 1.695650e-002, 7.308968e-003, -8.437759e-003, -1.722829e-002, 3.794861e-002, -8.750808e-003, -2.843778e-002, -1.804643e-002, -2.432190e-002, 1.707702e-003, 7.178621e-003, -9.189333e-002, 1.182655e-001, 6.562418e-002, -1.352663e-001, 2.915904e-003, -3.745380e-002, -6.060874e-003, -1.018619e-001, -5.488231e-002, -3.201880e-002, -8.628652e-003, 5.883269e-002, 7.516829e-003, -1.638917e-002, -6.114923e-003, -2.948481e-003, 1.493210e-002, -1.132074e-002, -4.673561e-002, -4.953133e-003, -2.396049e-003, -1.206085e-002, 1.662885e-002, -2.741422e-002, 1.720002e-002, -2.511514e-002, 7.072534e-002, -4.366996e-002, 2.303216e-002, -4.716093e-003, -1.231805e-002, -1.170138e-002, 7.954336e-003, 3.856557e-002, -2.287037e-002, 1.316382e-003, 1.259837e-002, -5.531413e-003, -3.471835e-003, 1.491095e-002, -1.839185e-002, -4.013739e-002, -2.603901e-002, 7.951214e-003, -5.825102e-002, 6.102922e-002, -2.727554e-002, -3.494938e-002, -3.972300e-002, 2.350733e-002, -1.044168e-001, 3.743725e-002, -6.111626e-002, 5.494082e-002, -5.568603e-002, 1.028901e-002, -3.466409e-002, -3.016749e-002, 2.424453e-002, 2.716915e-003, 5.989839e-003, 4.809614e-003, 2.502569e-002, 1.008174e-002, -2.483918e-002, -7.734252e-003, -1.146702e-002, -2.465841e-002, -1.853032e-002, 2.272532e-002, 8.474874e-003, 3.761981e-002, 1.327115e-002, 4.396322e-002, -3.139089e-002, -3.832886e-002, -3.005616e-002, 5.020759e-003, 2.607078e-002, -1.084138e-002, 1.437662e-002, -9.517112e-003, 1.392040e-002, -5.080098e-003, -1.336314e-002, 6.627924e-003, 2.536934e-002, 5.910003e-003, -3.404321e-002, 1.456723e-002, -1.823280e-002, 1.849423e-002, 1.365773e-002, 3.490177e-003, 3.681955e-002, -1.771558e-002, -2.111113e-003, -6.954239e-002, 1.285721e-002, -1.690325e-002, 2.465136e-004, 2.898129e-002, -1.807665e-002, -1.054614e-002, 2.783448e-002, -2.398454e-002, -1.065796e-002, 2.138049e-003, -9.015723e-007, 5.887215e-004, -2.053418e-003, 5.938614e-003, -1.701605e-003, -2.380431e-003, 4.740506e-003, 4.193265e-002, 4.965032e-003, 6.887749e-003, -1.687173e-002, 1.079415e-002, -4.485558e-002, 9.769253e-003, -1.668875e-002, 1.253129e-003, -1.318992e-003, -3.378600e-004, 3.704457e-002, -6.648115e-003, -1.407013e-002, -5.863108e-003, 3.085762e-003, -7.355661e-004, 1.148090e-002, 1.444746e-003, -1.974088e-002, 2.120680e-002, 2.710404e-002, -1.990314e-003, 2.303741e-002, -1.165133e-002, 1.432585e-002, -3.489028e-002, 1.269310e-002, -1.474686e-002, -5.646946e-003, -1.422565e-002, -1.989815e-002, 9.469118e-004, 3.674480e-002, -1.461398e-003, -1.470269e-002, -1.052970e-003, -1.721827e-003, 1.166208e-002, -4.398761e-003, 1.305096e-002, 7.239359e-003, -1.561805e-002, 1.675894e-002, 2.217796e-002, 1.290706e-002, -1.325763e-002, -3.644577e-003, 2.690171e-002, -6.254863e-002, -5.047146e-002, 1.223019e-002, -1.391690e-002, -2.534593e-002, 3.066268e-003, 2.429357e-002, -2.854857e-002, 1.101269e-002, 6.782486e-003, -8.636507e-003, 1.314717e-002, 4.391297e-004, -3.568224e-003, 1.548382e-003, 7.814472e-003, 2.740042e-003, -6.086388e-003, 4.858279e-003, -4.746060e-003, 2.541924e-002, 5.209316e-003, -3.365364e-002, 4.095267e-002},


© ISO/IEC 2004 — All rights reserved

--`,,```,,,,````-`-`,,`,,`,`,,`---

Copyright International Organization for Standardization
Provided by IHS under license with ISO
No reproduction or networking permitted without license from IHS
Not for Resale

{4.397529e-003, -5.220437e-003, 2.550839e-002, -4.615712e-002, 9.682512e-002, -8.718604e-002, 3.077945e-002, 1.621468e-002, -1.449869e-003, -5.417375e-002, 2.916560e-002, -4.978394e-003, -4.978394e-003, 2.916560e-002, -5.417375e-002, -1.449869e-003, 1.621468e-002, 3.077945e-002, -8.718604e-002, 9.682512e-002, -4.615712e-002, 2.550839e-002, -5.220437e-003, -5.755682e-003, -6.021638e-002, -1.980821e-002, 3.469382e-002, 3.330774e-002, -9.812516e-002, 7.115346e-002, 3.337786e-003, -1.091370e-002, 4.951281e-003, -2.189204e-002, -1.317133e-002, 1.690352e-003, -5.725406e-002, 3.100995e-002, -2.395831e-002, -4.758327e-003, 4.360381e-002, -4.824409e-002, 6.778071e-002, 4.214328e-002, 4.692732e-003, 4.261368e-002, 2.490339e-002, 3.415502e-002, -3.875751e-003, -2.759155e-002, -7.623929e-003, 1.014886e-001, -5.282872e-002, -4.947441e-002, 3.512522e-002, 7.825724e-002, 3.674453e-002, -3.066261e-002, -1.396557e-003, 8.180967e-002, 3.666294e-002, 3.381939e-002, -2.281626e-002, -3.330599e-002, 1.735004e-001, -1.223091e-001, 6.270585e-002, 1.000748e-001, 5.805476e-003, -6.321851e-003, 3.745541e-002, 7.938103e-002, -6.852882e-002, -2.321963e-002, 2.217773e-002, -6.535813e-003, -4.185516e-002, 2.253268e-002, -2.302804e-002, -3.531211e-003, 2.068632e-002, 1.558222e-002, -2.126138e-002, -7.809320e-004, 3.460840e-003, -5.476993e-003, -3.647304e-002, 3.289299e-002, -2.183327e-002, 1.490021e-002, -3.612351e-002, -3.918816e-002, -1.334868e-002, 7.091038e-002, -5.466441e-003, 1.034165e-001, -7.672226e-002, 2.120714e-002, -5.837689e-003, 7.781868e-002, -1.576749e-002, 1.737707e-002, -1.202200e-002, 1.368488e-002, 1.270076e-002, 2.572413e-003, -5.507881e-002, -4.871225e-003, 9.129924e-003, -2.801533e-002, 4.252606e-002, 1.824066e-003, -5.244700e-002, -7.961581e-002, -1.414744e-001, 3.727446e-002, 2.743391e-002, -8.951963e-002, 1.358683e-001, -3.020066e-002, 1.496544e-002, -3.499410e-002, 4.354276e-002, 4.513141e-002, -2.419899e-002, 4.879706e-003, -1.799212e-002, 1.318261e-002, 3.762862e-002, 2.826555e-002, -8.982563e-003, 4.190974e-002, 5.056805e-002, -1.818372e-002, 3.998662e-002, 3.931911e-002, 3.240398e-002, -1.008605e-001, 8.992629e-002, 1.004812e-002, -2.203175e-002, -6.230981e-002, 3.792662e-002, -7.657243e-002, 1.033967e-002, -1.139335e-002, -2.495659e-002, 1.368381e-003, -1.385149e-002, -1.512252e-002, -1.279925e-002, -8.006572e-003, -2.240174e-002, -3.636974e-002, -2.025964e-002, 2.814670e-002, -7.367677e-002, -8.321769e-003, -2.389786e-004, 4.504636e-002, 3.397426e-002, -5.232621e-002, 1.990364e-002, 4.813676e-002, -3.632838e-004, -1.345155e-002, 5.453631e-002, -4.884666e-002, -2.065207e-002, 2.919893e-003, 2.024339e-002, -7.111010e-003, -1.847896e-002, 7.023437e-004, 2.689859e-002, 5.309187e-003, -1.076515e-002, 3.615573e-003, -5.865375e-003, 2.779494e-002, -5.497970e-002, 1.113879e-003, -1.986049e-002, 4.411433e-002, 2.180932e-002, 3.357691e-002, -4.786890e-002, 1.367400e-002, -3.660515e-003, -3.881887e-002, 1.250144e-002, -3.291087e-002, 2.380856e-002, -2.272148e-002, -3.013300e-002, -2.497023e-002, -2.369812e-003, -8.373903e-003, 2.289036e-002, 1.725223e-002, -3.391258e-002, 2.985970e-002, 9.911790e-004, 4.260759e-002, -2.474308e-002, -7.500056e-002, 9.391684e-003, 7.350647e-003, 4.835300e-003, 2.896954e-002, -2.142349e-002, 6.078014e-002, 3.847116e-003, -2.070643e-002, 2.215286e-002, -4.270553e-002, -2.563608e-002, -2.014988e-002, 2.384178e-005, 5.018018e-003, 7.005190e-005, 5.900359e-005, -3.850294e-002, 1.545951e-002, -2.169716e-003, 1.778092e-002, 2.748793e-002, 1.753334e-004, -4.701971e-003, -6.836919e-002, -1.487656e-002, -6.162252e-002, 7.890138e-003, 2.215897e-002, -2.359132e-002, 3.147096e-002, -2.640217e-002, -2.587756e-002, -8.568765e-003, -2.797678e-002, 3.573420e-003, 4.268963e-003, 2.353043e-003, 1.784318e-002, -6.412799e-003, -6.774204e-004, -3.971882e-002, 1.211949e-002, 4.307692e-002, -3.218814e-002, 1.721737e-003, 2.565614e-002, -2.731670e-002, -1.352291e-002, 1.551850e-002, -4.263465e-002, 6.478889e-004, 1.036475e-002, -3.673867e-002, 3.866713e-003, -1.637483e-002, -1.803122e-002, -3.065532e-003, -1.402262e-002, 4.346253e-003, 3.640321e-003, -6.651705e-003, 4.762292e-003, 3.433410e-003, -4.626601e-003, 3.122111e-002, -2.461300e-003, 3.453525e-002, 4.993571e-003, -6.784932e-002, 7.795791e-002, 3.816020e-002, -1.227827e-002, 1.200097e-003, -2.230941e-002, 1.585524e-002, 1.002023e-002, -1.725020e-002, -6.401343e-003, -2.156980e-002, -1.372809e-002, 1.105897e-003, -6.880128e-003, 1.301351e-003, 1.448628e-003, 6.236989e-005, -1.891630e-002, 1.564885e-002, 1.831060e-002, 1.496415e-002, -4.423655e-004, -6.030793e-003, 3.278351e-002, -4.540073e-002, 9.942934e-004, -3.830414e-003, -1.613127e-002, 3.582927e-002, -1.121905e-002, 4.487248e-003, -1.508782e-002, -1.950745e-002, 7.384013e-003, 4.741944e-004, 1.447778e-003, -7.957664e-003, 4.694110e-003, 2.146231e-003, -2.136700e-003, 6.253831e-003, -1.999700e-002, 2.871501e-002, 1.366281e-002, -6.888145e-003, 2.235565e-002, -8.303500e-003, 2.098181e-002, 1.478136e-018, 1.946820e-003, -1.855020e-002, 1.611618e-002, -1.709271e-002, -1.695364e-002, 3.759136e-002, -6.522865e-002, 5.460662e-002, 9.160552e-004, -2.302527e-002, -2.618894e-004, 2.618894e-004, 2.302527e-002, -9.160552e-004, -5.460662e-002, 6.522865e-002, -3.759136e-002, 1.695364e-002, 1.709271e-002, -1.611618e-002, 1.855020e-002, -1.946820e-003, -8.782238e-003, 4.364188e-002, 1.441415e-002, 2.063772e-002, -1.054557e-001, 7.189113e-002, -4.443538e-002, -4.011724e-002, -2.392328e-002, 1.316309e-002, -2.992711e-003, -4.144742e-002, -6.172135e-002, -1.693504e-002, 3.811280e-002, -6.717130e-003, -5.883057e-002, -6.311123e-002, 2.274276e-001, -2.164960e-001, 1.049921e-001, 4.533283e-002, -4.544700e-002, 1.912564e-002, -9.310795e-002, 6.921424e-002, -4.255111e-002, -2.176810e-002, 1.089572e-004, -6.802422e-002, 4.055775e-002, 2.201282e-002, 1.295951e-003, -2.566206e-002, -8.934670e-003, -7.554163e-003, -3.550638e-002, 1.166116e-002, 6.932663e-002,

© ISO/IEC 2004 — All rights reserved


Copyright International Organization for Standardization
Provided by IHS under license with ISO
No reproduction or networking permitted without license from IHS
Not for Resale

6.602981e-003, 3.221960e-002, -1.741205e-002, -2.043607e-003, 6.036960e-002, -7.350861e-002, -1.496780e-002, -4.872832e-002, 4.513203e-002, -8.247913e-002, 5.715588e-002, 7.061795e-002, 3.013865e-002, -2.406444e-002, 2.606025e-002, -1.555171e-003, -6.650808e-003, 1.030086e-002, 2.847564e-002, 3.042652e-002, 2.597297e-002, -1.551157e-002, -5.780362e-004, 1.393479e-002, -1.631118e-002, -1.273337e-002, 5.485827e-002, -3.274264e-002, -1.919357e-003, 2.615197e-002, 1.311645e-001, 3.279891e-002, -5.229357e-002, 1.178136e-001, -3.622197e-002, 2.524252e-002, 2.064059e-002, 3.223853e-002, -1.472375e-002, 1.163730e-002, 3.917356e-002, 1.560081e-002, -2.230900e-002, 1.856118e-002, 5.050548e-003, -7.563907e-003, 3.311676e-002, -3.156083e-002, 1.375915e-002, 3.902277e-002, -6.613823e-002, 5.772792e-002, -3.474597e-002, 1.317548e-002, 4.389305e-002, 4.488070e-003, -1.718763e-001, 1.980304e-002, -2.275643e-002, 6.338329e-002, -2.198030e-002, 2.631702e-003, 1.294807e-002, 2.511004e-002, -1.181278e-002, -3.254854e-003, -3.548017e-003, 1.415877e-002, -1.029914e-002, -1.212590e-002, 4.625725e-002, -6.299673e-002, 8.476139e-002, -4.176585e-002, -4.010459e-002, 1.108565e-002, -1.008229e-001, 1.325364e-002, 4.985469e-002, -2.490992e-002, -1.027432e-002, 3.958209e-002, -1.186402e-002, 4.802098e-002, 2.534384e-002, 8.837251e-003, -2.168067e-002, -1.773510e-002, -2.191148e-003, -2.023488e-003, -3.085409e-003, -1.400617e-002, 1.548443e-002, -7.921812e-003, -1.054259e-002, -9.230124e-002, 9.286951e-002, -6.268306e-002, 9.306249e-002, -9.057846e-002, -2.808794e-002, -1.331763e-002, -1.625051e-002, 4.712398e-002, -4.663709e-002, -2.934115e-003, 2.007273e-002, 7.748930e-003, -3.028435e-002, -3.353369e-002, -1.006910e-002, 1.048825e-002, 1.625334e-002, 2.292273e-002, -5.676602e-003, -3.068084e-002, 4.304426e-002, -3.609386e-002, -2.716560e-002, 5.569396e-002, -3.146102e-002, 1.019559e-001, 1.059437e-001, -9.613354e-003, 9.268355e-003, -4.967046e-002, -1.936498e-002, -1.237376e-002, -3.514956e-003, -7.394557e-003, -2.170579e-002, -2.379753e-002, 7.544170e-003, 1.801010e-002, -1.500162e-002, -1.039628e-002, 1.110186e-002, 1.580411e-002, 1.178936e-002, -4.790763e-002, 2.901083e-002, -6.926426e-002, -6.292174e-002, 3.419699e-002, -2.826619e-002, 1.558132e-002, 2.533716e-002, 5.379051e-003, 1.044772e-002, -4.091878e-002, 4.004386e-002, -1.684662e-002, -2.624109e-002, -1.870149e-002, 2.608052e-002, 2.414219e-002, -6.581449e-006, -1.195330e-002, -1.193185e-002, 7.458135e-003, 1.866217e-002, -2.573263e-002, 1.490838e-002, 2.909699e-002, -5.713365e-002, 7.963892e-003, -5.631353e-003, -1.779199e-002, -8.895473e-002, -1.323689e-002, 3.655486e-002, -4.916603e-002, 4.865223e-002, -2.236319e-002, -3.103922e-002, -8.241012e-003, 1.511881e-002, 8.290563e-003, 6.794974e-003, -6.329619e-003, -9.481281e-003, 8.897926e-004, 4.987558e-003, 1.091069e-002, -2.345255e-002, -3.874025e-002, -1.080381e-004, 8.615079e-002, -8.283306e-002, -1.902233e-003, 5.614977e-002, 1.656014e-002, 1.500880e-002, -1.280917e-002, 8.783096e-003, 6.791074e-003, 5.827443e-004, -3.220053e-002, 1.088162e-002, -9.048687e-004, 7.278884e-003, -7.673746e-003, 3.925817e-003, 7.539780e-003, 4.107874e-003, -1.664506e-002, -1.769803e-003, 1.286043e-002, -4.768426e-002, 1.526281e-002, -4.394662e-005, -2.897574e-003, -1.325379e-002, -4.403310e-002, -3.616623e-002, 3.055739e-003, -4.578228e-003, -2.905520e-002, 1.593639e-003, -2.477860e-002, -1.148931e-002, -5.486267e-003, 1.774187e-003, 8.362734e-003, -2.138005e-003, 8.536582e-004, -3.799586e-003, 8.950406e-003, 6.544925e-003, -1.228675e-002, -2.252930e-002, 1.424098e-002, 9.785370e-003, -4.674632e-003, -1.565348e-002, 9.166671e-003, 1.519125e-002, 8.151390e-003, -2.272867e-002, -9.770812e-003, -1.708057e-002, -2.636032e-003, -2.234636e-002, -2.694630e-003, -5.532535e-003, -2.757084e-004, -5.227221e-003, 3.517689e-003, 7.044729e-003, -3.092499e-004, 1.260227e-002, 7.109816e-003, -1.123476e-002, 2.628432e-003, -1.053889e-002, -2.315186e-003, 3.554659e-002, -2.686011e-002, -1.966099e-002, 7.474829e-003},

{-2.209264e-003, -9.395856e-003, 3.365211e-002, -6.244021e-002, 5.654235e-002, -1.590292e-002, -2.666400e-002, -1.323262e-003, 6.157413e-003, -1.275875e-002, -1.419176e-002, -9.544756e-003, -9.544756e-003, -1.419176e-002, -1.275875e-002, 6.157413e-003, -1.323262e-003, -2.666400e-002, -1.590292e-002, 5.654235e-002, -6.244021e-002, 3.365211e-002, -9.395856e-003, 5.031889e-004, 2.454007e-002, -1.088842e-001, 9.404531e-004, -3.543154e-002, -4.312644e-002, -1.506239e-002, -4.351933e-002, -2.217209e-002, -2.902272e-002, -2.070739e-002, -3.215332e-002, -7.492061e-003, 4.110855e-003, 1.335300e-002, -6.813647e-003, -6.120226e-002, -1.109380e-002, 6.138118e-002, -5.018589e-002, 6.512064e-003, -7.365854e-003, -1.978389e-002, 9.124304e-003, 2.432118e-002, 6.245677e-003, 4.562212e-002, -9.416610e-002, 6.084830e-002, -6.044267e-002, 3.965711e-002, -3.418451e-002, 3.315180e-003, -8.088953e-003, 3.925721e-002, 3.410246e-002, 4.282781e-003, -2.704951e-002, -6.694205e-003, 9.728562e-002, 7.063316e-002, 5.971401e-002, -8.954636e-002, 6.571173e-002, -3.857045e-002, 6.512876e-002, 5.809858e-002, 1.655578e-002, 4.214512e-002, -8.134084e-002, 1.285106e-001, -1.113889e-001, -8.951932e-003, -2.414787e-002, 5.987096e-002, 2.272332e-002, 3.117146e-002, 9.914688e-003, -2.476147e-002, 2.065569e-002, 4.656841e-002, 4.691805e-002, 7.459065e-003, 3.104034e-002, -1.327119e-001, 1.276276e-001, -3.794745e-002, 4.161561e-002, -4.381154e-002, -1.168044e-001, -1.889272e-002, 3.725133e-002, -3.219620e-003, -1.062692e-002, 9.051886e-003, -1.369393e-002, 8.665379e-003, -2.148922e-002, 3.524644e-002, 4.217014e-002, 2.026231e-002, 4.306565e-004, -1.002638e-002, -3.467382e-002, -4.347520e-002, -1.996754e-002, -6.347313e-002, 1.260648e-002, 9.842613e-002, -4.482063e-002, 1.752971e-001, -8.606481e-002, 9.943311e-002, 2.557813e-002, 2.783122e-002, 5.289664e-002, -4.561313e-002,


© ISO/IEC 2004 — All rights reserved

Copyright International Organization for Standardization
Provided by IHS under license with ISO
No reproduction or networking permitted without license from IHS
Not for Resale

7.232548e-002, 5.360097e-002, -2.130836e-002, -4.562969e-002, -1.021370e-002, -2.028222e-002, -8.591284e-003, -8.491785e-003, -1.732020e-002, 2.301473e-002, -1.604717e-002, -5.628531e-003, 8.964422e-003, -5.103096e-003, -3.292163e-002, -9.286963e-002, -1.198095e-001, 1.732716e-002, -7.096150e-002, -1.413695e-001, -8.200107e-002, -1.484437e-002, 1.864280e-002, -8.878657e-003, 5.270682e-002, -5.514690e-003, 5.189042e-002, 2.047018e-002, 1.660623e-002, -2.101484e-003, -7.197716e-003, -3.297406e-003, -3.656343e-002, -9.028624e-003, -5.180004e-002, 6.375219e-002, 4.076367e-002, -5.270611e-002, 1.305826e-001, -7.360307e-002, -1.235677e-001, -1.117399e-001, 9.698894e-002, 1.745489e-002, 6.943951e-003, -9.388013e-003, 1.322875e-002, -2.707813e-002, 4.766539e-002, -9.826188e-003, 4.612618e-003, -2.891579e-002, -1.119495e-002, -1.571065e-002, -2.498586e-002, 2.486318e-002, -3.236483e-002, -5.161482e-003, -6.387320e-003, 6.824810e-002, -1.094105e-002, -1.150420e-001, -1.657605e-002, 1.112888e-001, -3.150579e-002, -3.638364e-002, 5.893113e-002, 3.069122e-002, -1.027333e-002, 1.436513e-002, 3.846696e-002, -6.680281e-003, 9.522562e-003, -2.255318e-002, -4.078156e-004, -4.958593e-003, -1.795428e-002, -2.239626e-002, -1.468943e-002, 2.531831e-002, -4.237646e-002, 3.473055e-003, 2.694660e-002, 2.307721e-002, -2.047897e-002, 6.259836e-002, -3.177255e-002, 1.410088e-002, 1.905586e-002, -3.283169e-002, 3.614535e-002, 1.089781e-002, 1.000269e-002, 2.640722e-002, 1.706875e-002, -2.009550e-002, -1.497249e-002, -1.389806e-002, 1.335371e-003, 1.104865e-002, 2.211857e-003, 1.429437e-002, 2.931446e-003, -2.221614e-006, -3.113346e-002, 9.224900e-003, -1.949127e-002, 4.482670e-002, -8.160321e-003, -4.854067e-002, -5.429637e-002, 2.763849e-002, 2.087272e-002, -7.515604e-003, -7.663359e-003, 2.098011e-002, -7.634417e-003, 1.430338e-002, -1.247789e-002, -1.634285e-003, 3.588020e-003, -3.280827e-004, -5.763879e-003, 7.799669e-003, 6.145011e-003, 9.125191e-003, 1.143371e-002, -1.435256e-002, 1.556990e-002, 2.034343e-002, -3.719738e-002, 3.237502e-002, 4.331276e-002, -5.375798e-003, -3.136888e-002, 3.160246e-002, 2.031405e-002, 2.543163e-003, 5.853325e-003, 8.398979e-003, -1.883159e-002, 8.270533e-003, -4.696208e-004, -3.718132e-003, 1.057816e-003, 1.250762e-002, 1.243639e-002, -9.953127e-003, -2.444358e-003, 1.186022e-004, -1.125337e-003, 1.894387e-002, 2.973028e-002, 7.237667e-003, 3.151266e-002, -4.077658e-002, -1.799904e-002, 2.071780e-002, -1.424724e-002, -7.926484e-004, 5.507461e-003, -1.056080e-003, -1.475261e-002, 3.790041e-003, 2.956913e-003, 1.696470e-003, -8.355568e-004, -5.832183e-003, -3.821554e-003, 3.076493e-003, 1.943615e-002, -1.372966e-002, 5.536995e-003, -9.925268e-003, 1.112882e-002, 2.116855e-002, -1.740375e-004, -8.769338e-003, -2.774030e-003, 7.256228e-002, -5.076427e-002, 4.636225e-003, 1.068916e-002, -8.351572e-004, -7.384285e-003, 2.714801e-003, 6.620672e-004, -6.653605e-003, 9.741351e-004, -9.908173e-004, -4.952102e-003, 9.686521e-003, -6.775576e-003, -9.667488e-003, 1.056243e-003, -8.372070e-003, 1.649569e-002, -4.036811e-003, 2.043835e-002, -1.401608e-002, 2.506215e-002, -5.372439e-002, 6.586153e-017, 1.003552e-002, -5.114725e-003, 1.656676e-003, 1.831646e-002, -2.106870e-002, -9.482497e-003, -1.299669e-003, -1.626761e-002, 5.251144e-003, -1.173768e-002, 5.345950e-003, -5.345950e-003, 1.173768e-002, -5.251144e-003, 1.626761e-002, 1.299669e-003, 9.482497e-003, 2.106870e-002, -1.831646e-002, -1.656676e-003, 5.114725e-003, -1.003552e-002, 2.473174e-002, -1.851130e-003, -1.336205e-002, -3.123490e-002, 3.281314e-002, 3.682057e-002, -4.894704e-002, -1.882382e-002, 2.009474e-002, 6.037267e-003, 1.943140e-002, 1.380146e-002, 2.807883e-002, 2.315475e-002, 9.836713e-004, 2.689417e-002, 2.648726e-002, -4.022305e-002, 1.010504e-001, -6.282091e-003, -2.630493e-002, 2.034951e-002, -8.301177e-003, -5.542395e-002, 6.977797e-002, 3.459825e-002, 1.008694e-002, -3.931439e-002, -8.769122e-003, 9.393300e-002, 5.171890e-002, -4.573135e-002, -2.749888e-002, 1.009094e-002, 6.528390e-002, 1.359670e-002, -9.211817e-003, 2.508424e-002, 5.639784e-003, -2.642451e-002, 4.363304e-002, -3.977464e-002, 2.200207e-002, 3.656615e-002, 3.457591e-003, 1.808935e-002, 8.596382e-002, 7.092228e-002, -6.086552e-002, 4.924669e-002, 2.030969e-002, -1.167916e-001, 2.277892e-002, 9.122628e-004, 9.913687e-002, 8.270984e-002, 5.226728e-002, -6.195954e-002, -6.100368e-003, 1.954464e-002, 9.919148e-003, 1.527401e-002, -7.044805e-003, 9.016303e-002, -6.353273e-002, 3.047215e-003, 2.824053e-002, -8.226428e-002, -1.054103e-001, -7.140210e-002, -1.584074e-001, 2.773588e-002, -1.141348e-002, -7.476225e-002, 6.895095e-002, -1.264774e-001, -3.686943e-002, -5.653130e-002, 1.245191e-004, -3.201740e-002, -2.640890e-003, -2.644525e-002, -3.572256e-002, -3.409035e-002, -3.594398e-002, 3.307947e-002, -8.883137e-002, 5.326728e-002, -7.351712e-004, -3.514366e-002, -5.241476e-002, -4.262239e-003, -6.250004e-002, 3.203927e-002, 7.524629e-002, -7.817438e-002, 4.850229e-002, -3.528754e-003, 3.804641e-002, -2.792571e-002, 5.481924e-002, 3.629816e-002, 9.739386e-003, -1.517375e-002, 1.197025e-002, 6.316446e-003, 1.866892e-002, 6.574531e-002, -7.697465e-003, 3.407704e-002, -8.676118e-002, -7.371065e-003, 5.923803e-002, 9.419243e-002, 5.656091e-002, -7.916825e-002, -3.082081e-002, -1.089467e-001, 7.673662e-002, 6.760196e-002, 6.689898e-002, 1.716418e-002, 5.302202e-002, -1.987515e-003, 1.243114e-002, 1.472329e-002, 3.213876e-002, 2.316712e-002, 1.843651e-003, -4.117431e-002, -3.284254e-002, 2.839749e-002, -2.931916e-002, 1.413373e-002, 3.065299e-002, 6.081744e-002, -1.686052e-001, -1.600802e-002, -2.012256e-003, -9.421297e-002, 1.114404e-001, -1.715318e-002, -5.944315e-003, 4.337763e-002, 2.200454e-003, -1.227594e-002, -1.090627e-004, -9.409896e-003, -2.456496e-002, 4.069859e-003, 1.304287e-002, -7.082195e-004, 6.738186e-003, -9.897118e-003, -4.428385e-002, -5.393699e-002, 2.142984e-003, -1.552013e-002, -3.135726e-002,

© ISO/IEC 2004 — All rights reserved


Copyright International Organization for Standardization
Provided by IHS under license with ISO
No reproduction or networking permitted without license from IHS
Not for Resale

7.369366e-002, 1.729859e-003, 3.845935e-002, -1.627652e-002, -2.708334e-002, 3.003698e-002, 4.792667e-002, -4.555618e-002, 2.372739e-003, 1.457657e-003, -9.124912e-003, -2.586830e-002, 7.681250e-003, -1.922499e-003, -4.162603e-003, 4.795862e-003, -3.597679e-002, -1.621049e-002, 2.654221e-002, 2.434109e-002, -2.034390e-002, -1.478631e-003, 5.085864e-002, -3.596062e-002, -2.951508e-002, -4.399045e-002, 1.028247e-002, 1.055995e-002, 2.326711e-002, 2.820987e-002, -1.957830e-003, -2.028564e-002, -8.112149e-003, -1.727031e-002, 1.964574e-002, 1.896501e-003, 8.546670e-003, -4.483446e-003, -3.633049e-003, 8.994104e-003, -1.713992e-002, -1.074855e-002, -1.327451e-002, -3.667402e-003, 1.600469e-002, -3.445082e-002, -2.192004e-002, 4.435340e-002, 1.506771e-002, -2.956970e-002, 3.934313e-002, 3.066529e-002, -3.754112e-002, -1.089155e-002, 2.043396e-002, -1.972978e-002, 4.647693e-003, -3.950253e-003, 3.111809e-003, -7.903342e-004, -7.367964e-003, -5.829593e-003, 6.618333e-003, 1.753588e-002, -1.085173e-002, 1.376079e-002, -3.546944e-003, -2.302316e-002, -5.929853e-003, 2.068090e-002, -4.373285e-004, 3.249554e-002, -8.830030e-003, 2.663637e-002, 3.941556e-003, -1.169512e-003, 1.235146e-002, -7.040279e-003, 1.137798e-002, 7.091334e-003, 3.716782e-004, -8.795787e-003, -2.090098e-003, -8.296403e-004, 3.900795e-003, 2.599861e-005, -4.596103e-003, 2.409770e-003, -2.470205e-002, 1.431187e-002, -1.051557e-002, -1.056393e-002, 1.916413e-002, -4.945995e-002, -9.224654e-003, 8.574599e-003, -1.321075e-002, 3.136522e-002, -1.546643e-003, -1.311421e-002, -2.440130e-004, 1.073356e-002, -3.896490e-004, -9.283395e-004, -9.000622e-003, -4.838951e-003, 1.835600e-003, -9.615304e-004, 6.704278e-003, -3.833610e-003, -3.801372e-003, -1.029005e-002, -1.703317e-002, 1.904982e-002, 2.211607e-002, -2.079285e-002, 1.490729e-002, -2.345668e-003, -3.263979e-002, 4.792837e-002, -8.380494e-003, -9.505496e-003, 1.493845e-002, 8.325224e-003, -8.853834e-003, 1.251808e-002, -1.265411e-002, -3.336751e-003, -1.155109e-003, 3.679939e-003, 9.520764e-003, -7.034678e-003, -3.878673e-003, -1.376884e-003, -1.122164e-002, 2.737254e-003, 1.226340e-002, -8.891463e-003, 2.153947e-002, -6.188470e-003},

{2.396716e-003, -9.151588e-003, 1.056199e-002, 5.411058e-002, -1.040466e-001, 8.004559e-002, 1.069333e-002, 1.030736e-002, -4.426269e-002, 3.793424e-002, -1.271508e-003, -2.459395e-002, -2.459395e-002, -1.271508e-003, 3.793424e-002, -4.426269e-002, 1.030736e-002, 1.069333e-002, 8.004559e-002, -1.040466e-001, 5.411058e-002, 1.056199e-002, -9.151588e-003, 1.133426e-002, 1.594095e-002, -1.126897e-001, 1.846662e-001, -1.222187e-001, 7.284873e-002, -4.192064e-002, 2.813042e-002, -2.815788e-003, -2.923823e-002, 1.197044e-003, -1.922059e-002, 1.465721e-002, 5.269826e-003, -2.674796e-002, 1.558068e-002, 4.013110e-002, -1.377947e-002, 2.562552e-002, 1.554660e-003, 9.826378e-003, 1.474017e-002, 4.732983e-002, -4.287585e-002, 3.262046e-002, -3.576681e-002, -1.133942e-002, 7.128114e-002, 4.934680e-002, 6.048815e-003, 8.629175e-003, 1.176235e-002, 2.616964e-002, -1.637639e-002, 1.330265e-002, 2.152657e-003, -3.776013e-002, -1.992517e-003, 3.076944e-004, 1.621117e-002, 3.025612e-002, -6.050644e-002, 7.414229e-002, -2.019776e-002, -2.360501e-002, -5.365330e-002, 1.359080e-002, -3.705014e-002, 6.036098e-002, -9.381308e-002, 5.823572e-002, -9.164445e-003, -9.151986e-003, -1.867545e-002, 2.822614e-002, 2.117204e-003, 1.577273e-002, -6.999602e-004, -2.774409e-002, 1.077447e-002, -4.548907e-004, 1.046269e-002, -1.314290e-002, 3.625784e-002, -3.291490e-002, -6.617376e-002, -2.385317e-002, 1.000978e-001, 3.600946e-002, 1.568545e-001, 1.806491e-001, -2.543732e-002, -1.358681e-001, 1.216889e-001, -7.493111e-002, -1.770906e-004, 3.931966e-002, -1.899971e-002, -1.555669e-002, -9.156095e-003, -6.218989e-003, 1.925222e-002, -1.096688e-002, 5.237031e-003, 1.174017e-002, 6.399399e-003, -9.029446e-003, 1.700704e-002, 9.828130e-002, -5.480410e-002, -4.437215e-002, -8.627668e-002, -1.680992e-001, -4.522252e-002, 7.789166e-002, 5.612465e-003, -3.047043e-002, 2.271520e-002, 3.531953e-002, 8.474181e-003, 1.072808e-002, -5.955773e-003, 1.483687e-002, -4.218512e-004, -9.185499e-003, -2.185600e-002, -5.219898e-002, -2.316466e-003, 2.285180e-002, 2.596667e-002, -3.283600e-002, 5.848607e-003, 2.083105e-002, 7.438863e-002, -3.357737e-002, 7.625179e-002, 1.685557e-002, 6.030215e-003, 3.288645e-002, -5.438699e-002, -1.533605e-002, -8.087800e-004, -2.695689e-002, -4.793915e-003, 2.039362e-002, -3.641176e-002, -1.575664e-002, 5.124345e-003, -1.490440e-003, -7.937799e-003, -2.067841e-002, -2.272467e-002, -1.601353e-002, 3.457700e-004, -1.038306e-001, 1.531940e-001, -4.209027e-002, 7.145697e-002, -5.042127e-002, 5.147660e-005, 1.617951e-002, -4.660330e-002, 1.254307e-002, -2.220319e-002, -3.778625e-002, -1.659866e-002, 2.608408e-002, 1.936827e-002, 6.269458e-003, 1.057927e-003, -2.544043e-003, -6.006707e-003, 1.547754e-003, 2.177488e-002, -1.608412e-002, 1.631272e-002, 5.137989e-002, 9.743943e-003, -6.058125e-002, 1.103952e-002, -3.331591e-002, -5.927462e-003, 2.749062e-002, 1.361639e-002, -3.896810e-002, 3.984690e-003, 1.050921e-002, 1.929511e-002, 3.924245e-002, 6.692994e-003, -6.674511e-003, -5.306730e-003, 1.202928e-002, 8.806598e-003, 1.184049e-002, 3.631830e-003, 6.464991e-004, 3.353675e-002, -1.291597e-002, -1.988098e-002, 3.309057e-002, -6.974662e-002, 5.066590e-002, 2.107614e-002, -7.169954e-003, 2.962305e-003, -1.419959e-002, 1.321914e-002, -5.943914e-002, 3.295571e-002, -6.710234e-003, 5.239881e-003, 2.615684e-002, -2.137247e-002, -3.596164e-003, 1.614948e-002, 4.776430e-003, 7.569897e-003, -6.359781e-003, 2.643101e-002, -8.220315e-003, -1.583475e-002, 2.284559e-002, -6.471501e-002, 5.198656e-002, -1.790494e-002, 2.690691e-002, -1.548506e-002, -7.663577e-003, -8.509952e-003, 1.827918e-002, 1.039731e-002, -4.254344e-002, 1.307421e-002, 3.373095e-002, -3.859873e-003, 1.509670e-003,


© ISO/IEC 2004 — All rights reserved

Copyright International Organization for Standardization
Provided by IHS under license with ISO
No reproduction or networking permitted without license from IHS
Not for Resale

1.372464e-002, 1.988724e-002, 2.225797e-003, 1.547144e-003, -7.387035e-003, -2.355200e-002, -5.311169e-003, 2.877222e-003, -2.051823e-002, 6.239771e-002, 1.280698e-002, -5.030875e-002, 2.078269e-002, 1.102182e-002, -7.450512e-003, 2.887390e-002, -2.730194e-002, -8.439555e-003, -1.642352e-002, 5.183864e-004, 1.812891e-002, -1.031721e-002, 1.078568e-002, 2.239309e-002, -1.671449e-002, 1.288480e-002, 1.589776e-002, -8.656228e-003, -2.656130e-002, 5.281355e-004, 9.490542e-003, 2.893556e-003, 2.517016e-002, 6.362504e-003, 2.185640e-002, -3.772544e-002, -1.508633e-002, 1.444481e-002, 3.334088e-003, -3.289806e-003, -8.835552e-003, 9.025963e-003, -1.864524e-002, -1.134396e-002, 1.631661e-002, 1.437271e-002, -2.623483e-003, -3.902993e-003, -5.580956e-003, 3.343432e-003, 9.379376e-004, -1.150054e-002, -1.468890e-002, 1.316902e-002, 4.085447e-002, -7.980931e-003, -1.920376e-002, -1.998468e-002, -2.100243e-003, 1.143503e-001, -6.410414e-002, 1.604465e-004, 2.957112e-002, -1.466375e-002, -1.957452e-002, 8.452134e-003, -5.980904e-003, -7.546292e-003, 8.686173e-004, -8.094480e-003, 2.330656e-003, 6.193557e-003, -5.476168e-004, -5.402612e-003, 8.706617e-003, -7.115970e-003, 9.454002e-003, 5.210346e-003, -1.067901e-002, 3.513224e-002, -2.749283e-002, -7.412869e-002, -1.236602e-017, 7.524872e-003, -1.866482e-002, 3.662613e-002, -3.360902e-002, 5.797612e-003, 1.856279e-002, -3.920114e-002, 8.802280e-003, 2.958010e-002, -6.210113e-003, 4.982413e-003, -4.982413e-003, 6.210113e-003, -2.958010e-002, -8.802280e-003, 3.920114e-002, -1.856279e-002, -5.797612e-003, 3.360902e-002, -3.662613e-002, 1.866482e-002, -7.524872e-003, -1.398946e-002, -3.557306e-002, -2.269772e-002, -2.085120e-002, 7.891879e-002, -6.125498e-002, -3.515555e-002, 7.792448e-002, -2.158277e-002, -2.265385e-002, -1.213976e-003, 7.718619e-003, -7.849667e-003, -2.838519e-002, -2.505827e-002, 6.256068e-003, 3.977668e-002, 4.951457e-002, -9.573965e-002, 8.551150e-002, -9.505759e-002, -7.785390e-003, 5.375270e-002, 3.688515e-002, 1.680342e-002, -2.527375e-002, -1.407256e-001, 1.448224e-001, -9.779888e-002, -2.943521e-002, -1.493148e-002, 3.608839e-002, -2.761734e-002, -1.677604e-002, -1.803734e-002, -2.556595e-002, -1.469162e-002, -3.680652e-002, -2.815099e-002, -1.193681e-002, 4.758443e-002, -9.571213e-002, 6.931843e-003, 4.243384e-002, -2.067841e-002, -1.198573e-001, -7.193985e-002, 1.612427e-001, 3.696716e-002, -3.902636e-002, 1.900528e-002, 4.352631e-003, 4.555636e-002, 1.269192e-002, 1.194850e-002, 1.792785e-002, 1.413293e-002, -2.239367e-002, -2.641588e-002, -6.600356e-003, 2.723199e-002, -4.472310e-002, -3.132530e-002, -1.162927e-002, 2.683195e-002, -5.829404e-002, -3.419285e-002, 1.567885e-003, 7.747891e-002, 3.677998e-002, -1.198760e-001, 3.023094e-002, -2.451983e-002, 3.383079e-002, -9.062963e-002, 4.138552e-002, -1.286291e-002, -1.452940e-002, -7.934548e-004, -2.256019e-002, -2.129954e-002, 9.351676e-004, -3.263908e-002, 1.397076e-004, 2.769131e-002, -1.367324e-002, -1.801778e-003, -3.684218e-002, 6.724537e-002, 4.365140e-002, -7.700988e-002, 9.529081e-003, -1.121418e-001, -7.371713e-002, 1.317922e-001, 3.539928e-002, -3.680593e-002, 4.639644e-002, 4.764183e-004, 8.983159e-003, -4.439973e-002, -3.147499e-002, -3.525587e-003, 2.174885e-002, 1.973075e-002, 4.502959e-003, -3.770220e-002, -3.484624e-002, 4.447759e-002, 1.356662e-002, 2.316582e-002, 8.944495e-003, -5.116129e-002, -1.888420e-002, 2.186681e-002, -3.529694e-003, 6.807032e-002, -1.471950e-001, 3.563658e-002, -6.304906e-002, -2.073174e-003, 3.199363e-002, 4.531078e-002, 4.609622e-002, 5.120505e-003, -1.116432e-002, 7.344972e-003, 1.206136e-002, 4.552465e-003, 2.696175e-003, -7.158507e-003, -2.657959e-002, 3.612547e-002, -3.272537e-002, 2.997363e-002, 3.110296e-002, -2.548974e-002, 3.488684e-002, 6.804317e-002, -6.812144e-002, 8.589402e-002, -2.293145e-002, 2.602514e-002, 4.300283e-002, -1.222035e-002, -1.502587e-002, -2.578064e-002, -2.324320e-002, -6.231367e-004, 3.408852e-003, -1.306937e-002, -9.151258e-003, -1.461534e-002, 1.304362e-002, -4.559878e-003, -1.286158e-002, 3.382179e-002, -4.291181e-002, -2.098652e-003, 4.046652e-002, -5.868730e-002, -1.508459e-003, 4.673033e-002, -5.600755e-002, -8.246335e-003, 1.978468e-002, -4.299350e-002, 2.049451e-002, -1.772126e-002, 1.539070e-003, 2.543555e-002, 4.594424e-003, -5.012656e-003, 1.824765e-002, -1.005245e-002, -6.921868e-003, -1.765086e-002, 6.677067e-004, 4.194758e-002, -1.121346e-002, 1.630043e-002, 2.291180e-002, -1.519160e-002, 4.730476e-002, -3.995329e-002, 1.687428e-002, -3.971651e-002, -1.090749e-002, 6.362108e-002, 5.790745e-003, 1.061944e-002, 1.601617e-002, -3.627933e-003, -2.175676e-002, -9.864374e-003, -4.812394e-003, 8.481299e-004, 1.113543e-002, -4.654729e-003, 6.743163e-003, 2.101042e-002, -7.320126e-003, 1.500740e-002, 4.007738e-002, -4.995703e-002, -4.914751e-002, 9.485698e-002, 6.886329e-002, -3.512401e-002, -3.019647e-002, 5.903788e-002, -5.376571e-002, 2.086672e-002, 3.994952e-002, -1.743392e-002, -3.946111e-004, -1.146823e-002, -5.720527e-003, 1.077681e-002, 1.964252e-002, 6.547452e-003, 6.887577e-003, 4.774320e-003, -7.838621e-003, 7.312428e-003, -1.816179e-002, -4.305625e-002, 7.546094e-002, -1.709191e-002, -1.011835e-002, -6.817557e-002, 9.888876e-003, 4.318749e-002, -5.164561e-002, 1.957224e-002, 8.730457e-004, 9.069877e-004, 6.485252e-003, 1.447097e-002, 1.269929e-002, 1.860501e-003, -1.945839e-002, -1.790216e-002, 1.499018e-002, 1.868142e-002, -6.579590e-003, -1.097230e-002, -1.621321e-002, 2.843235e-003, 1.927138e-002, -3.351395e-002, 6.689493e-002, 3.189615e-002, 3.239985e-002, -2.343587e-002, -2.471877e-002, 3.217220e-002, -3.247250e-004, -8.190319e-003, 8.333519e-003, 2.907914e-002, 1.265052e-002, -9.477994e-003, -8.659326e-003, -1.332552e-003, 6.089781e-003, -3.003863e-003, 1.660665e-004, -2.801357e-003, -1.339014e-002, -4.996805e-003, -1.004062e-002, 2.019114e-002, 5.543937e-002, -2.453643e-002, -7.459256e-004, -7.398582e-003, 1.272131e-002, 2.288958e-002, -

© ISO/IEC 2004 — All rights reserved


Copyright International Organization for Standardization
Provided by IHS under license with ISO
No reproduction or networking permitted without license from IHS
Not for Resale

5.363179e-003, -2.371218e-002, 5.908828e-004, 7.518858e-003, -6.242185e-003, 1.072402e-003, 1.364624e-003, -3.050203e-003, 1.719400e-003, 4.653252e-004, -4.900508e-003, 2.179639e-003, -1.062453e-002, 1.329384e-003, -8.711419e-004, 1.867620e-003, 1.562267e-002, -4.187189e-003, 2.519499e-002, 7.344851e-003},
{3.386719e-003, -3.749063e-003, 4.438093e-003, -2.625067e-002, 3.208305e-002, -2.215414e-003, -2.032981e-002, 2.458576e-002, -1.246942e-002, -3.330275e-003, -3.969932e-003, -3.775284e-003, -3.775284e-003, -3.969932e-003, -3.330275e-003, -1.246942e-002, 2.458576e-002, -2.032981e-002, -2.215414e-003, 3.208305e-002, -2.625067e-002, 4.438093e-003, -3.749063e-003, 2.285953e-002, -1.859570e-003, 2.719501e-002, 1.795878e-002, -7.631134e-002, 1.113665e-001, -4.352322e-002, -2.007062e-002, 9.787343e-003, 4.968024e-002, 3.410912e-002, -2.287412e-002, 2.381066e-002, -1.139590e-002, -2.013582e-002, -2.653545e-002, -5.616072e-002, 3.853585e-002, -7.740699e-002, 4.215338e-002, -4.801338e-002, -1.683508e-002, 5.407369e-003, -6.879649e-002, 7.435538e-002, -3.374845e-002, 2.584492e-002, 5.193377e-003, -2.635883e-002, 6.271563e-002, -4.024317e-002, -2.196032e-002, -5.443978e-003, -3.477936e-002, -4.410971e-002, -1.657168e-002, 1.340572e-002, 2.288777e-002, -1.443226e-002, 4.463662e-002, 1.429118e-002, -4.706061e-002, 9.201158e-002, -1.970608e-002, 3.332629e-002, 3.151539e-002, 4.880469e-002, -2.114388e-002, 8.193577e-002, 1.070341e-003, 6.798916e-002, 3.866890e-003, 2.589001e-002, 4.457901e-002, -3.149189e-003, 9.863890e-003, -3.807710e-002, -2.589144e-002, -3.334783e-003, -2.134044e-002, -2.826043e-002, -1.356358e-002, -4.977454e-003, 5.036053e-002, 4.233988e-002, 1.954183e-002, 9.682725e-003, 1.467096e-002, 3.232927e-002, -5.988735e-002, -2.562809e-003, -8.549474e-004, -5.743508e-002, -6.537959e-002, 1.167308e-001, 6.313448e-003, -1.966876e-002, 6.522745e-002, 3.632165e-002, 3.422093e-002, 2.091684e-003, -1.300784e-003, -1.620169e-002, -2.478833e-002, 1.697730e-002, -6.645336e-002, -8.081256e-002, -2.743982e-002, -1.759660e-001, 2.199155e-004, 9.821552e-002, -2.663193e-002, -1.978856e-002, 1.583354e-003, 2.453728e-002, 1.177716e-002, 1.186445e-001, -9.550253e-002, -1.144931e-002, -1.251987e-002, -2.489528e-002, 2.006276e-002, 7.126841e-005, 1.554060e-002, 5.213868e-002, 1.346157e-002, 3.626765e-003, -9.308008e-003, 4.020231e-002, -4.105630e-002, -4.523345e-002, 1.256405e-001, -5.302163e-002, 6.705725e-002, -5.109986e-002, 1.914990e-002, 6.295445e-002, -3.075088e-002, -3.078950e-002, 1.340840e-002, 1.986746e-002, -1.705345e-002, 1.938234e-002, -3.838843e-003, -4.802688e-004, 2.382105e-002, -9.260822e-006, -2.840625e-002, 1.341378e-002, -3.656828e-002, 1.629634e-002, 5.329617e-002, 5.702088e-002, 1.089483e-002, -6.959540e-002, 4.677939e-002, -1.279913e-001, 2.783092e-002, -5.506279e-002, -8.234431e-002, 9.011114e-002, -1.591776e-002, -5.140582e-002, 9.149799e-003, 3.829277e-002, -1.034788e-002, -1.267601e-002, 1.861600e-002, -1.199393e-002, 2.454229e-002, 1.624987e-002, -1.094701e-002, -7.989028e-003, -4.552107e-002, -2.376835e-002, 2.486429e-002, -4.360020e-003, 1.563279e-002, 7.187104e-003, 1.036131e-001, 3.424017e-002, 2.626277e-002, -1.832160e-002, 1.673978e-002, -3.722775e-002, 6.039960e-002, -1.437053e-002, -3.738038e-003, -9.416092e-003, 1.698291e-002, -4.374251e-002, -6.147154e-003, -3.032454e-002, -4.018367e-002, -1.822736e-003, -1.840461e-002, 2.945253e-002, -6.198653e-003, -4.053202e-003, 1.122460e-002, 2.294623e-002, -5.348515e-002, -7.698733e-002, 3.916667e-002, -3.251221e-002, 3.493155e-003, -8.498710e-004, -3.044876e-002, 3.857758e-002, -1.379807e-003, -7.499740e-003, 1.881025e-002, -3.962964e-002, 1.968238e-002, -2.072368e-002, 2.352129e-002, 1.122054e-002, -3.181154e-002, 6.205206e-003, -3.311578e-002, 3.442332e-002, 1.228846e-002, -3.320774e-002, 1.570510e-002, 1.714304e-002, -1.025566e-002, -3.005012e-002, 4.039801e-002, 5.797178e-004, -2.994755e-002, 5.004842e-002, -5.948203e-002, 3.905429e-002, -6.019099e-003, -1.751259e-002, 1.116630e-002, -1.920322e-002, 1.842794e-002, -1.746206e-002, -7.012600e-003, 6.778599e-003, -4.290935e-002, 8.809320e-003, -2.101326e-002, -2.939766e-003, 5.204077e-002, -9.014499e-002, 2.473156e-002, -3.182827e-003, 1.633808e-002, 4.166833e-002, 3.019169e-002, -8.983956e-003, -5.588469e-002, 4.970871e-002, -1.315150e-002, 1.177320e-002, 4.779982e-003, -2.020885e-002, 2.058204e-002, -1.158239e-002, 1.222949e-002, 2.251100e-002, -1.821664e-002, 1.108293e-003, -2.402941e-002, 4.260820e-003, -5.556325e-003, -3.412249e-002, 2.003816e-002, -4.113280e-002, 5.954016e-003, 1.241755e-002, 1.917741e-002, 2.534453e-002, -2.230281e-002, 1.087272e-002, -1.342894e-002, 1.514767e-003, -2.495276e-003, -6.650084e-003, -2.385192e-003, -1.494854e-003, 7.235913e-003, -1.526742e-002, -3.087831e-003, 1.462859e-002, -2.583706e-002, -1.046214e-002, -1.839670e-003, -8.140230e-003, 4.683430e-003, -3.274552e-002, 3.713645e-002, -3.132575e-003, 2.549050e-002, 1.907169e-002, -7.632420e-003, 4.187542e-002, -3.435578e-002, 1.155695e-002, 1.067938e-002, 1.341056e-002, -1.921004e-002, -5.916766e-003, 4.855834e-003, -7.806713e-003, -4.394903e-003, 5.150057e-004, -2.428521e-003, 5.201337e-003, -2.231376e-002, -2.476783e-002, 3.469299e-003, 4.668591e-003, 1.019890e-002, -1.939736e-002, 1.350655e-002, 1.987953e-002, 1.289070e-017, 2.446545e-003, -5.225884e-003, 8.909753e-003, -2.829729e-002, 5.223443e-002, -2.373919e-002, -2.689074e-002, -8.743964e-003, 1.947230e-002, -8.834580e-003, -6.191289e-003, 6.191289e-003, 8.834580e-003, -1.947230e-002, 8.743964e-003, 2.689074e-002, 2.373919e-002, -5.223443e-002, 2.829729e-002, -8.909753e-003, 5.225884e-003, -2.446545e-003, 1.393225e-002, 6.552419e-003, -4.666086e-003, -6.733001e-002, 4.938476e-002, 1.773858e-002, -6.270803e-003, -4.259681e-002, 1.618904e-002, -7.229894e-003, 2.404822e-002, -4.142200e-003, -7.222353e-002, -2.319182e-002, 1.712740e-002,


© ISO/IEC 2004 — All rights reserved

--`,,```,,,,````-`-`,,`,,`,`,,`---
Copyright International Organization for Standardization
Provided by IHS under license with ISO
No reproduction or networking permitted without license from IHS
Not for Resale

3.186771e-002, -3.123045e-002, 6.462334e-002, -1.278696e-001, 9.199693e-002, -7.691149e-002, -1.247980e-002, -9.693882e-003, 1.315586e-002, -3.545919e-002, 1.069821e-002, -3.346089e-002, -5.243926e-003, 7.122543e-003, 1.564723e-002, 6.394108e-002, -1.765161e-002, 3.056635e-003, 1.847047e-002, 6.333480e-002, 6.695518e-003, 2.197281e-002, 4.844383e-002, -4.973531e-002, 6.181149e-002, 8.914100e-004, 2.191374e-002, -5.642896e-002, -1.313651e-002, 6.157402e-002, -1.370364e-002, -5.580064e-002, 8.204504e-002, -2.140079e-002, 2.199491e-002, -1.154951e-002, -6.987740e-002, 3.378839e-002, 4.755013e-004, 1.991605e-002, 1.032300e-002, 2.255628e-003, -3.936170e-002, -7.872549e-002, -2.628236e-002, 1.889341e-002, 5.634254e-002, -4.945661e-002, 8.805968e-004, 4.486761e-003, -4.854213e-002, 8.673227e-002, 1.410986e-002, 3.371625e-002, 7.955237e-002, 6.964414e-002, -3.583023e-002, 1.587376e-002, 1.861233e-002, -4.732783e-002, 2.508255e-002, -2.237408e-002, -2.312259e-002, -4.443777e-002, -9.345741e-003, -1.815691e-003, 4.059441e-002, -4.773046e-002, -3.840318e-002, -1.421393e-003, 3.819292e-002, -2.806108e-002, -1.359872e-002, 4.483603e-003, 1.992528e-002, -9.222682e-002, -1.903565e-002, -1.236999e-002, -1.182138e-001, 7.855604e-002, -1.631859e-001, 7.240356e-002, -4.750623e-002, -2.231165e-002, -2.301964e-003, 2.758575e-004, 3.654578e-002, 1.892685e-002, 1.780263e-002, 3.984894e-002, 3.842173e-002, -7.042593e-003, -2.782548e-003, -2.936099e-002, -3.928063e-003, -6.627596e-002, 1.075483e-001, -6.501380e-003, 5.880402e-002, 6.255259e-002, -1.082101e-001, -1.057244e-002, 1.145602e-001, 7.664927e-003, -8.313211e-002, 7.801257e-002, 8.210913e-004, 1.320251e-002, 4.916521e-002, 5.239109e-002, 3.113893e-002, -3.599418e-002, -3.387215e-002, 1.206024e-002, 7.746314e-003, 6.105703e-003, 2.211826e-002, -2.474558e-002, 2.850264e-002, -1.314373e-001, -8.729409e-003, 6.476091e-002, 2.314928e-002, 7.073840e-002, -1.039510e-001, -5.694219e-002, 4.446938e-002, 2.868121e-002, -8.504629e-002, 5.258106e-002, -7.283259e-003, 6.451885e-003, 9.171182e-003, -1.300916e-002, 8.876096e-003, 1.889217e-002, -2.151476e-002, -1.143227e-002, -3.395184e-002, 5.004860e-003, 4.179605e-002, -6.032226e-002, 9.061847e-002, -1.090946e-002, -3.332908e-002, -2.286690e-002, -1.047378e-001, 9.096586e-002, 1.335728e-002, -9.164150e-002, 1.160743e-002, 3.815375e-002, -2.330259e-002, 5.306701e-002, -3.546528e-002, 1.288556e-002, 1.273182e-002, -1.333404e-002, 2.584280e-003, 7.576136e-003, -2.765433e-002, -1.843356e-002, 2.546590e-002, -4.681237e-002, 1.101811e-002, -4.134036e-003, -9.563624e-003, 2.411388e-003, 5.369064e-002, 8.225237e-002, -9.788993e-002, -1.570154e-002, 6.731923e-002, -3.983471e-002, -4.035630e-002, 6.429781e-002, -6.706558e-002, 1.824406e-002, -1.039616e-002, -4.233785e-004, 1.347334e-002, 3.064853e-002, -6.558334e-003, -1.644861e-002, -8.842972e-003, -2.889380e-002, 7.163922e-002, -3.450983e-002, -3.333399e-002, 7.620713e-002, 2.247694e-002, -1.294437e-001, -1.185220e-001, 1.380787e-002, 1.663341e-002, -5.417962e-002, 3.479946e-002, 1.147905e-002, -1.061167e-002, -5.342105e-003, -1.168430e-002, 3.163184e-002, -4.499030e-003, -5.874153e-003, 9.606701e-003, 2.335771e-002, 2.037180e-002, -4.053289e-002, 1.799319e-002, -7.232511e-003, -1.273515e-002, 4.457804e-002, -8.003182e-002, 1.031376e-002, 2.907514e-002, 2.410981e-002, -3.276287e-002, -4.865529e-002, 4.114352e-002, -1.695304e-002, 1.835344e-002, -1.671798e-002, -2.083316e-003, 2.136081e-002, -4.158623e-003, -2.813646e-003, 1.873203e-003, 1.348409e-002, 3.063161e-002, -1.353689e-002, 1.262044e-002, -3.539263e-004, 1.091485e-002, -3.349731e-003, -6.795552e-002, 9.324375e-002, -6.566703e-002, -3.189685e-002, -5.787965e-002, -1.604100e-002, 3.904700e-002, -5.469288e-002, 1.207466e-002, 1.536892e-002, -7.096247e-003, -9.954166e-003, 1.020450e-002, 3.775569e-003, 4.888516e-003, -1.041460e-002, -1.390626e-003, -2.185149e-003, 2.268316e-002, -1.546401e-002, -4.242839e-003, 1.534628e-002, 4.393571e-003, -2.552071e-002, -6.291129e-002, 4.636738e-002, 1.278739e-002, -2.503260e-002, -8.667342e-004, -2.424101e-002, -1.637270e-002, 3.094109e-002, -3.153685e-003, 1.229031e-003, 4.304196e-003, 8.691787e-003, 1.122910e-002, -1.088697e-002, -2.364627e-004, 6.607377e-003, 1.160142e-002, 3.413733e-003, 6.413403e-004, -8.505578e-003, -1.320471e-002, -1.631810e-002, 5.156642e-003, 1.473111e-002, -3.886602e-002, 3.408172e-002},

{-5.440279e-003, 9.656100e-003, -2.794104e-002, -7.349124e-003, 5.966554e-002, -4.417052e-002, 3.967944e-002, 3.280820e-002, -1.914726e-002, -1.963929e-002, 2.165486e-002, 4.569150e-002, 4.569150e-002, 2.165486e-002, -1.963929e-002, -1.914726e-002, 3.280820e-002, 3.967944e-002, -4.417052e-002, 5.966554e-002, -7.349124e-003, -2.794104e-002, 9.656100e-003, -2.516889e-002, -7.672778e-002, 3.268389e-002, -6.379207e-002, -3.843246e-002, 3.970848e-002, -2.460800e-002, 1.547908e-002, -1.491396e-002, -4.113661e-002, -1.969078e-002, -3.336538e-002, -2.014777e-002, 6.703666e-003, 5.572768e-002, 2.615714e-002, -1.671765e-002, -1.013595e-002, 2.324983e-002, 8.190501e-002, -1.283760e-001, 4.221079e-002, 1.456832e-002, -9.018597e-003, 3.862792e-002, -3.185493e-002, 4.452010e-002, -8.097895e-002, 9.398837e-003, 1.837008e-002, -4.964033e-003, 4.359039e-002, 3.001509e-002, -2.024291e-002, -2.495829e-002, 2.662454e-002, 1.430546e-002, -5.834484e-003, -2.329749e-003, 1.957138e-002, 2.095775e-002, 3.607611e-002, -1.121706e-001, -4.229795e-002, -6.414083e-003, -3.525174e-002, 1.667654e-002, 4.141775e-002, -3.828683e-002, 5.555607e-002, -9.082611e-002, 3.193547e-002, -1.055454e-001, -5.514188e-002, 1.358973e-002, -1.074245e-002, 5.682973e-003, 3.900142e-004, -3.488078e-002, -7.960278e-004, 3.978914e-002, 6.695204e-002, -3.793985e-003, -2.222582e-002, 5.295751e-002, -1.315858e-001, 1.173686e-001, -5.454954e-002, -3.817256e-002, 7.921161e-002, -5.828213e-003, 4.911987e-003, 6.056779e-002,

© ISO/IEC 2004 — All rights reserved


Copyright International Organization for Standardization
Provided by IHS under license with ISO
No reproduction or networking permitted without license from IHS
Not for Resale

3.553344e-002, -9.957622e-002, 4.780036e-002, 3.276543e-002, -2.317682e-002, -5.042840e-003, 5.843375e-003, 2.741129e-002, 1.859661e-002, 9.622369e-003, -9.504215e-004, -9.228685e-003, -2.920550e-003, -4.406242e-002, -1.363914e-002, 4.037209e-002, 5.183931e-002, -7.855081e-002, 9.025613e-002, -6.997233e-002, -1.130723e-002, -7.153843e-002, -1.097586e-001, 6.596465e-002, 5.892231e-002, -3.710788e-002, 3.216574e-002, 3.573064e-002, 1.159879e-002, 2.092736e-002, -3.082219e-002, 1.128903e-002, 1.535563e-002, 1.166624e-002, 7.149484e-003, 4.623292e-002, -4.190287e-002, -1.863632e-003, 1.485709e-001, -1.694286e-001, 1.057302e-001, -4.698516e-002, -2.018887e-002, 1.353039e-001, -1.811816e-002, 9.532866e-002, -4.632268e-002, -2.763760e-002, 1.827866e-003, -1.501555e-002, 1.186461e-002, -8.169976e-003, -3.254790e-002, -1.230793e-002, 1.425250e-002, 8.468086e-003, -1.320504e-002, 1.471005e-002, 1.417911e-002, 8.402490e-002, -5.400090e-002, -2.486132e-003, -2.802517e-002, 8.952899e-002, -3.322336e-004, 5.212510e-002, -3.065690e-002, 2.082923e-002, -1.374512e-002, 7.860620e-003, 2.737510e-002, -3.363062e-002, 2.240878e-002, 2.651024e-003, 4.871577e-003, -1.732891e-003, -6.229083e-003, 8.777728e-003, 2.641072e-002, 9.928597e-003, -2.969786e-002, 2.813107e-003, -3.081787e-003, -2.140501e-002, 4.451740e-002, -2.168057e-003, 1.511349e-002, -1.286771e-002, 1.403989e-002, 4.331086e-002, 5.631980e-002, -4.080080e-002, -7.287688e-002, 2.831285e-002, 1.541853e-003, 4.108851e-002, 2.895759e-002, 9.198357e-003, 1.251150e-002, 5.955521e-003, -1.442423e-002, 8.565708e-003, -1.124942e-004, -1.873639e-003, -1.189326e-002, 1.822674e-002, 4.695495e-002, -6.106820e-002, -2.386363e-002, 9.115144e-002, -2.142453e-002, -5.262811e-002, 7.400651e-002, -1.616043e-002, -5.114293e-002, 3.803328e-002, -4.145162e-002, 4.419842e-002, 4.385536e-002, 5.869845e-003, 8.948685e-003, 1.035788e-002, 4.151086e-003, 2.746412e-005, -1.880295e-002, 3.116424e-002, 1.693478e-004, 2.225058e-002, 1.166498e-002, -9.510709e-002, 6.727871e-002, -5.135890e-003, -9.582488e-002, 8.813597e-002, 9.342949e-002, 2.696572e-003, -4.028697e-002, 2.038214e-002, -1.736798e-002, 6.674686e-003, 1.779317e-003, 1.017855e-002, 7.737951e-003, -7.901874e-003, 4.619950e-003, -3.513267e-003, -1.013397e-002, 3.250469e-003, -1.033543e-002, 1.237851e-002, -5.508332e-004, -3.900044e-003, -1.288741e-002, -1.655342e-002, 3.380325e-002, -5.253579e-002, -3.054976e-002, 1.712879e-002, -1.183130e-002, 6.974429e-002, -2.912941e-002, -2.365233e-002, 3.899263e-003, 1.766941e-002, -4.042049e-003, 2.179363e-003, 2.239152e-002, -1.017378e-002, -6.321286e-003, 7.049768e-003, -1.428325e-002, 1.502352e-002, 3.811975e-003, -4.118702e-003, 9.495277e-003, -2.402087e-003, -4.452214e-002, -2.678436e-002, 3.802553e-002, -1.582111e-002, 6.256053e-002, 5.153883e-003, -6.386320e-002, 2.156496e-002, 3.650776e-002, -3.459202e-003, -3.970460e-003, -3.641687e-003, 7.570280e-003, 2.078542e-003, 6.099498e-003, -9.841395e-003, -5.239304e-003, 5.948653e-003, -2.252732e-003, -1.374073e-003, -4.273160e-003, 6.859544e-003, -3.160799e-002, -1.144850e-002, 4.926700e-002, -6.049980e-002, -1.469321e-002, -8.027746e-003, 9.412406e-003, 5.927349e-003, -1.836841e-002, 1.412950e-002, 4.417816e-003, -1.926394e-002, 3.443418e-003, -3.285909e-003, 6.920299e-003, -1.119465e-002, 3.103851e-003, 1.391481e-002, -6.053508e-003, 5.002738e-003, 1.082742e-003, 7.698427e-003, -7.842998e-003, 1.961252e-003, -1.255710e-002, -2.747047e-002, 3.350540e-002, -2.051795e-003, -5.702037e-017, 9.202885e-003, -2.066833e-002, 2.839862e-002, 4.098004e-004, -3.411068e-003, 2.877824e-002, -4.225081e-002, 1.226843e-002, -5.394583e-003, -2.479871e-002, 3.099803e-002, -3.099803e-002, 2.479871e-002, 5.394583e-003, -1.226843e-002, 4.225081e-002, -2.877824e-002, 3.411068e-003, -4.098004e-004, -2.839862e-002, 2.066833e-002, -9.202885e-003, 1.454579e-002, -7.637226e-003, 2.004571e-002, -6.698926e-002, 3.733590e-002, -1.447784e-002, -6.304526e-002, 2.265065e-002, -3.837814e-002, 2.589986e-003, 1.229563e-002, 1.132293e-002, -3.690426e-002, -8.198237e-002, -5.248802e-002, -2.863390e-002, 1.935136e-002, -5.836845e-002, -6.470166e-002, 4.136854e-002, -4.068671e-002, -1.282565e-002, -1.429937e-002, -2.193102e-003, 3.503574e-002, 8.634385e-002, -7.461284e-002, 5.869183e-002, -3.400689e-003, -2.704278e-002, -6.504393e-002, 1.627358e-002, 6.805357e-003, -2.910163e-003, -4.872195e-002, -3.069677e-002, -1.376058e-002, -1.488109e-002, 3.434097e-002, -4.105578e-002, 1.048970e-002, 4.844633e-002, 2.571620e-002, -4.840444e-002, 6.484736e-002, 4.218482e-002, 1.157936e-002, -4.662475e-002, 3.547971e-002, -4.531439e-002, 6.435845e-002, -6.266171e-003, 6.845836e-003, 5.308182e-003, -2.070988e-004, 4.448683e-002, 3.687333e-002, 2.636300e-002, 2.096881e-002, -4.365348e-002, -4.358855e-002, -1.935985e-002, 8.634504e-002, 3.219185e-003, -4.006460e-002, 3.395010e-002, -1.087804e-001, 6.305838e-002, 3.373061e-002, -7.296163e-002, -1.653322e-002, 6.826477e-003, 8.755301e-002, -7.190280e-002, 2.020136e-002, -3.483708e-002, -4.056630e-002, 1.334479e-002, -9.028817e-003, -6.732928e-003, -2.840817e-002, 1.073893e-002, 4.021815e-002, 2.034071e-002, 1.824652e-002, -5.070553e-003, -4.084501e-002, 7.250147e-003, 3.585895e-002, -4.180772e-002, 8.814788e-002, -5.652630e-002, 1.053164e-001, 5.786836e-002, -6.643938e-002, 6.988680e-002, 1.968655e-003, 1.648720e-002, 9.643647e-003, -1.538158e-002, -2.076788e-002, -6.618300e-003, -2.633937e-002, -1.436304e-002, -1.995617e-002, -1.513613e-002, -1.692945e-002, -3.577675e-003, 7.427356e-003, 1.707769e-002, -1.999969e-002, -2.171464e-002, 1.172642e-001, -8.874356e-003, -5.918793e-002, -9.474597e-002, -1.345457e-002, 4.642255e-003, -6.081159e-002, 2.232889e-002, -4.366141e-002, -3.126918e-002, -2.641874e-002, 1.572964e-002, 1.138166e-002, 1.104564e-002, -6.660710e-003, -2.124001e-002, -2.074403e-002, 3.582272e-003, -4.711308e-002, 9.945043e-003, 2.373512e-002, -4.685826e-002, 1.262375e-001, -


© ISO/IEC 2004 — All rights reserved

Copyright International Organization for Standardization
Provided by IHS under license with ISO
No reproduction or networking permitted without license from IHS
Not for Resale

6.137663e-002, -9.244518e-003, -1.136450e-002, 6.617947e-002, -4.807279e-002, 2.692709e-002, -2.185879e-002, 1.997690e-002, 6.052524e-002, -3.347624e-002, 2.305866e-002, 2.718671e-002, -7.924759e-003, -3.629582e-002, -4.744546e-002, -1.202564e-002, 1.760148e-002, 8.732318e-003, 8.113250e-003, -5.863433e-002, 7.162086e-003, 2.680884e-002, -3.566055e-002, 6.746730e-002, -8.366336e-003, 9.234552e-003, -8.050216e-002, 9.639709e-002, 7.337043e-003, 4.237552e-002, -2.798687e-002, 1.454312e-002, -7.691236e-003, -2.952767e-002, 1.548027e-002, -2.052252e-002, -2.205626e-002, -1.222713e-002, -1.906187e-002, -1.036409e-002, -1.173988e-002, 2.613562e-002, -1.472514e-002, -1.067490e-002, 3.981851e-002, -7.417642e-002, 7.904530e-002, 3.020795e-003, 3.885451e-002, 3.432379e-002, 2.354232e-002, -5.297780e-002, -4.936329e-002, 1.294189e-001, -4.326891e-002, 2.514427e-002, 4.677020e-002, -2.034835e-002, -4.187488e-004, -2.865055e-002, -1.530388e-002, 1.226248e-002, -3.347111e-002, -7.399779e-003, -3.517447e-002, 2.389402e-002, 2.348073e-002, -7.079048e-002, 8.905469e-002, 1.246346e-002, -4.714695e-002, -1.629573e-004, -1.910435e-002, 6.743152e-003, 8.016845e-002, -3.482954e-002, -4.603028e-002, 6.948748e-002, -2.838771e-002, 2.035612e-002, -7.041921e-003, -2.695338e-002, 1.191687e-002, -4.652729e-003, -6.595324e-003, 1.596610e-002, -3.105001e-002, -2.462999e-003, 1.585926e-002, -2.469380e-002, 7.216100e-002, -8.159906e-002, -2.458140e-002, 8.864800e-002, -2.934547e-002, 3.215832e-002, 4.893581e-002, -6.910517e-002, 5.604551e-002, -1.012937e-002, -2.069590e-002, 3.692034e-002, -3.249990e-002, 1.729558e-002, 1.722384e-004, -2.394505e-002, 4.140184e-003, 1.064107e-002, -1.095504e-002, 1.138040e-003, 5.844138e-003, -2.110227e-002, 4.467900e-002, -2.992412e-002, -1.090811e-002, 5.261586e-002, -5.719712e-002, -1.300636e-002, 2.411295e-002, 3.734379e-002, 1.278983e-002, -3.709671e-002, 4.852598e-002, -2.993694e-002, -2.343351e-002, 2.524848e-002, -5.979556e-003, 3.373262e-003, -6.495113e-003, -1.298087e-002, -9.363511e-004, 9.565063e-003, 7.508610e-003, -1.946112e-002, 2.023230e-002, -3.158307e-003, -1.158430e-002, 2.015158e-002, -4.520368e-002, 1.496246e-002, -2.134838e-002, 6.961317e-003, -8.344136e-003, 3.190234e-002, 7.724201e-003, -3.124920e-002, 1.311714e-002, -2.898312e-002, 6.145966e-003, 2.371852e-002, -9.050861e-003, -2.078364e-003, -4.219970e-004, -1.441075e-003, 1.273970e-003, -1.307631e-002, 1.229604e-002, -7.767710e-004, -5.774737e-003, 3.828789e-002, -4.456435e-002, 4.579470e-004, 2.743301e-002, -3.196015e-002},

{2.973125e-003, -5.212416e-004, 3.287315e-003, -1.502119e-002, 1.892473e-002, -4.956124e-002, 1.838877e-003, 4.527400e-002, -1.283592e-002, -9.318535e-003, 5.128591e-002, -2.326472e-002, -2.326472e-002, 5.128591e-002, -9.318535e-003, -1.283592e-002, 4.527400e-002, 1.838877e-003, -4.956124e-002, 1.892473e-002, -1.502119e-002, 3.287315e-003, -5.212416e-004, 7.429862e-004, 4.428579e-002, -1.068685e-002, 5.632905e-002, -6.843792e-002, 1.335051e-002, 2.410258e-002, -5.943785e-002, 5.866183e-003, 3.637194e-002, -4.529248e-002, -3.306840e-003, -6.928107e-003, -1.540965e-002, 1.141989e-002, 1.354309e-002, -1.883856e-002, -5.044155e-002, 6.402919e-003, -3.818142e-002, 1.848577e-002, -5.912521e-002, 6.488343e-002, -1.663896e-002, 2.263335e-002, -8.850013e-002, 1.176772e-001, -1.095277e-001, 5.624621e-002, 9.501982e-003, 1.131540e-002, 5.959576e-003, -5.299715e-002, 3.590475e-002, 5.232580e-002, -3.802523e-002, -3.385985e-002, -3.538139e-002, -5.895399e-002, -1.974891e-002, 1.562322e-002, 2.031035e-003, -5.466840e-002, 4.028230e-002, 1.488441e-002, 3.487097e-002, 3.051327e-002, 6.937737e-002, -8.784763e-002, 1.215563e-002, 7.418722e-003, -1.807675e-002, -1.087408e-001, 2.993500e-002, -2.368422e-002, 1.275975e-002, 3.685825e-002, 3.605613e-002, -4.519826e-002, -2.867880e-002, -2.377495e-003, 2.497732e-002, -1.219879e-002, -6.224347e-002, -3.128990e-002, 6.939274e-003, -1.089956e-001, 3.969187e-002, -6.764746e-002, -1.790577e-001, -3.352187e-002, 3.969864e-002, 1.078130e-001, -1.719957e-002, 1.143198e-002, 7.327813e-002, 5.437367e-002, 3.925535e-002, 1.033783e-002, 3.541045e-002, -3.177770e-003, 4.048860e-002, 3.268579e-002, 5.079357e-002, 7.927715e-003, 2.036917e-002, 2.367438e-002, 3.693180e-002, -9.630228e-002, 3.419775e-002, -7.003971e-003, -7.579858e-002, -7.009940e-002, -5.159649e-002, -3.368141e-002, -8.213703e-002, 6.562067e-002, 1.338366e-003, -4.969656e-002, 4.334892e-002, 3.782635e-003, 1.780982e-002, -9.529825e-003, -3.569254e-002, -3.551666e-002, -2.518873e-002, -1.859078e-002, 9.075109e-003, 4.092305e-002, 1.241772e-002, 3.097313e-003, 1.520120e-001, -2.590518e-002, 1.234750e-002, 4.838289e-002, -3.711903e-002, 6.426053e-002, 1.116659e-001, 8.409181e-002, 1.712368e-002, -1.261965e-002, 8.274445e-002, -2.449353e-002, 6.954250e-004, -3.561563e-003, -1.710387e-002, 4.946519e-003, 3.232713e-002, -1.165923e-002, -3.173008e-002, -3.347957e-002, -6.380725e-002, -1.311892e-002, -1.085677e-001, -1.300709e-002, 4.512828e-002, 1.879402e-001, 1.738079e-002, 6.266701e-002, -8.330256e-003, -1.947852e-002, 6.090700e-002, 9.712335e-003, 4.440996e-002, -2.864037e-002, -6.172513e-003, -2.846287e-002, 1.475125e-003, 1.327087e-002, -6.302913e-003, 8.378346e-003, 6.452338e-003, -2.358601e-002, -3.057774e-002, -1.587446e-003, -3.613645e-002, -1.830104e-002, -4.928961e-003, 3.003403e-002, -8.127998e-002, -3.183089e-002, -1.437327e-002, -4.856595e-003, 6.489061e-002, -2.025650e-002, -7.318908e-002, 2.797094e-002, 4.026517e-003, 1.146861e-002, 8.640114e-003, 2.413003e-002, 2.755981e-002, 1.268543e-002, 2.727887e-002, 2.409468e-002, -1.958062e-002, -2.665649e-002, 5.674456e-003, 3.366939e-003, -9.021140e-003, 7.199663e-003, -7.650003e-002, 5.916254e-002, -1.794254e-002, 1.730498e-003, -7.491149e-005, 2.351919e-002, -2.744797e-003, 1.435502e-002, 2.237709e-002, 3.130489e-002, -4.713907e-003, 8.003511e-003,

© ISO/IEC 2004 — All rights reserved


Copyright International Organization for Standardization
Provided by IHS under license with ISO
No reproduction or networking permitted without license from IHS
Not for Resale

5.780651e-003, -1.020354e-002, -1.459637e-002, -5.576555e-003, -1.401450e-002, 3.718474e-004, -6.976712e-003, -1.432057e-002, -6.556906e-003, -3.068541e-002, 2.344776e-002, -4.318669e-003, -4.530028e-003, 1.732437e-002, 8.103581e-002, -5.773513e-002, -3.958147e-002, 3.392715e-004, 5.877687e-002, -5.776771e-003, -2.516404e-002, 2.771032e-002, 4.505999e-003, -2.607142e-002, -2.051793e-002, -3.473510e-003, 8.265663e-003, 9.788200e-003, -1.904346e-002, -1.023514e-002, 1.847019e-002, 1.130860e-005, -4.136693e-002, 3.912800e-002, -7.216567e-003, -3.819476e-002, -2.351719e-002, -1.259741e-002, -1.792526e-002, 6.579046e-002, 2.109985e-002, -4.231334e-002, -1.877135e-002, 1.635178e-002, 1.149981e-002, -4.648140e-003, -8.550508e-003, -1.400269e-002, 1.302364e-004, 4.639679e-003, 1.903145e-002, 1.796866e-002, -1.958952e-002, -4.109434e-003, 5.021354e-002, -1.639682e-002, -7.098728e-002, 5.593384e-004, 4.715702e-002, 3.386964e-002, 2.825192e-002, -3.618017e-003, -9.324957e-003, -1.301975e-002, 4.825490e-002, 3.404610e-002, -1.958265e-002, -2.475721e-003, 3.834047e-003, -6.947783e-003, -1.126251e-002, -1.134130e-002, -9.357724e-003, 2.529264e-003, 8.099887e-003, 2.436078e-003, 6.557948e-004, -9.516117e-003, 2.405220e-003, -6.370122e-004, -2.476988e-002, -1.778868e-002, 1.154991e-002, 6.669799e-002, 8.142408e-003, -8.369060e-002, 6.150167e-002, 1.853374e-002, -2.950311e-002, 2.831960e-003, 2.116485e-002, -5.496502e-003, 2.028033e-003, -4.953392e-003, -6.926276e-003, 1.068119e-002, 5.461037e-003, 7.624556e-003, -9.013116e-003, 6.499677e-003, 2.725265e-002, -5.891008e-002, -3.422948e-002, 5.855137e-002, -3.458958e-002, 4.189777e-003, 1.592529e-017, -4.219851e-004, -6.313738e-003, 1.758955e-002, -1.704824e-002, -1.100688e-002, 1.771400e-002, 1.124830e-002, -1.014043e-002, -8.417872e-003, 1.751136e-002, 3.355465e-002, -3.355465e-002, -1.751136e-002, 8.417872e-003, 1.014043e-002, -1.124830e-002, -1.771400e-002, 1.100688e-002, 1.704824e-002, -1.758955e-002, 6.313738e-003, 4.219851e-004, 8.332604e-004, 4.600416e-003, -5.836572e-002, 9.185799e-002, -5.151196e-002, 1.413061e-002, -1.081309e-001, 5.270025e-003, -4.836713e-003, -1.546998e-002, -3.792798e-002, -1.887011e-002, 2.041014e-002, 7.303718e-003, 4.421125e-003, 7.298510e-004, 7.800989e-002, -6.536088e-002, 1.319832e-001, -2.433661e-002, -2.243339e-002, 2.723867e-002, -2.992299e-003, -4.993980e-003, 1.010537e-002, 4.351952e-002, 7.690865e-002, 4.702380e-005, -3.320977e-003, 2.728232e-002, -5.891915e-002, 8.870743e-003, 3.014934e-002, 1.844486e-002, -3.062972e-002, 3.597246e-002, 3.924656e-002, -5.021799e-002, -6.735154e-003, -3.534962e-002, 5.139033e-002, -2.906721e-002, -4.280802e-003, 4.052278e-002, -5.970199e-003, 4.505547e-002, -1.079471e-002, 7.685589e-002, -1.817797e-001, -1.185045e-001, 9.186956e-002, -3.774756e-002, -3.133548e-003, 8.230905e-003, 1.298551e-002, 3.782861e-002, -1.777255e-002, 2.251304e-002, 1.976656e-002, 1.564139e-002, 2.761281e-002, -2.437366e-002, 3.792800e-002, 3.727679e-002, -2.286819e-002, 6.009583e-002, -4.170289e-003, -6.648085e-002, -4.595355e-002, 7.926572e-002, -4.022076e-002, -3.527235e-002, -9.991855e-003, -1.009474e-001, 9.244923e-003, -8.106336e-002, 3.744437e-002, 3.035702e-002, -1.198462e-002, 4.242361e-002, 2.194162e-002, -4.466576e-002, -2.694365e-004, -4.387249e-003, -5.195239e-003, -1.202746e-002, -7.812653e-002, 3.962887e-002, -1.177992e-002, -6.135352e-002, 1.704538e-002, 1.037028e-002, -2.778797e-002, 2.717949e-002, -8.606529e-002, 4.395590e-002, 7.917831e-003, -8.090421e-002, 3.606062e-002, 5.566272e-003, -9.472438e-003, -2.250075e-002, -2.938756e-002, -3.185191e-002, -7.451042e-003, -2.929688e-003, -1.599295e-002, -1.495652e-002, 1.525452e-003, 7.850956e-002, 2.769503e-002, -2.806783e-002, -4.702354e-002, -1.123461e-001, -3.672190e-002, -4.211517e-003, -8.285910e-002, -1.447300e-002, -1.152556e-001, -7.775992e-003, -3.377533e-002, -3.195063e-002, 3.389498e-002, -1.503659e-002, -2.311352e-002, -8.378735e-003, 2.104954e-004, 3.133986e-002, 4.097426e-002, 4.078202e-002, -4.926611e-002, -1.628640e-003, 8.380421e-003, -5.326719e-002, 8.649683e-002, -7.282026e-002, 1.267787e-001, -5.493005e-002, 2.830179e-002, -1.745941e-002, -2.414601e-002, 3.066909e-002, 6.909943e-002, 3.615381e-002, 1.699921e-002, 4.119764e-003, 1.746487e-002, -1.971655e-003, -1.433736e-002, -9.710562e-003, -1.063866e-002, 4.629517e-002, 3.684121e-002, 2.569359e-002, -3.021915e-002, -1.323774e-002, -2.710779e-002, -1.769558e-002, -1.068689e-002, 6.025675e-003, -3.430463e-002, -3.454988e-002, 1.245147e-002, 5.035584e-002, 4.192383e-002, -5.938976e-002, 8.958552e-003, 1.974177e-002, -3.118201e-002, -1.365655e-002, -8.603142e-003, 1.102049e-002, 7.153153e-003, -1.229842e-002, 6.591531e-003, 3.551000e-002, -6.991749e-003, -4.587797e-002, 3.980105e-002, -2.388869e-002, -9.917908e-002, 8.264359e-002, 1.824704e-002, -3.751772e-002, 3.105682e-002, 2.347308e-002, -5.623661e-002, -4.023397e-002, 3.830389e-002, 3.892350e-002, -2.821482e-002, 3.734791e-002, -5.694557e-003, 1.707003e-002, -2.183014e-004, 1.161270e-002, -1.110147e-002, -3.292541e-003, 2.430953e-002, 9.667719e-003, 7.703637e-003, -2.651309e-002, 2.432292e-003, 3.607103e-002, -1.044696e-002, -8.279732e-002, -2.135555e-002, -9.791463e-002, 1.528941e-002, 2.434657e-002, 1.861370e-002, -1.725260e-002, -7.583919e-003, 2.395764e-002, 4.928026e-003, -2.807606e-002, -2.689979e-002, 2.008861e-002, 6.558416e-003, -4.503619e-003, 1.036708e-002, -1.106472e-002, -7.338223e-004, -2.222188e-002, 1.559954e-002, 3.966199e-002, -5.341751e-002, 1.470028e-002, 2.450474e-002, -1.007523e-002, -1.083270e-001, 3.635157e-002, 1.365996e-002, -3.449082e-002, -1.848802e-002, 1.969800e-002, 2.131511e-002, -3.328383e-002, -1.094111e-002, 7.184386e-003, -7.318011e-003, 1.607651e-002, -1.276133e-002, -1.710225e-002, 3.096577e-002, 9.391123e-003, -4.681031e-002, 1.321587e-002, 5.449507e-002, -9.497983e-004, -2.307133e-002, 8.301213e-003, 3.118966e-002, 3.081728e-002, -2.327816e-003, -


© ISO/IEC 2004 — All rights reserved

Copyright International Organization for Standardization
Provided by IHS under license with ISO
No reproduction or networking permitted without license from IHS
Not for Resale

3.323268e-002, 1.298992e-002, 3.924824e-002, -3.277926e-002, -1.765407e-002, 1.317455e-002, -5.703071e-003, -1.108133e-002, -5.362593e-004, 3.497751e-003, -6.093883e-003, 5.070343e-003, -3.780683e-003, 6.866812e-004, 1.428346e-002, -1.122196e-002, -1.284640e-002, 2.229169e-002, -8.338111e-003, -4.385855e-002, -3.551284e-002, -6.911756e-002, -6.827308e-003, 3.202544e-002, 2.679512e-002, -3.188799e-002, 1.043476e-002, 1.504092e-002, -4.407615e-003, -2.257421e-003, -1.245495e-002, 9.536560e-003, -5.124640e-004, -6.305485e-003, -3.095985e-003, 8.646492e-003, 1.155830e-002, -8.855395e-003, 1.597400e-002, 3.944841e-002, -5.492582e-002, -1.485869e-002, 4.119118e-002, -1.687722e-002},

{-4.534725e-004, 5.894300e-003, -3.409805e-002, 3.547152e-002, 2.338493e-003, -2.357636e-002, 8.083180e-002, -3.669729e-002, -2.913488e-002, 9.597623e-003, 3.403628e-002, -4.137403e-002, -4.137403e-002, 3.403628e-002, 9.597623e-003, -2.913488e-002, -3.669729e-002, 8.083180e-002, -2.357636e-002, 2.338493e-003, 3.547152e-002, -3.409805e-002, 5.894300e-003, 1.425758e-002, 4.293030e-003, 4.658060e-002, -1.453766e-001, 1.364054e-001, 1.039087e-001, -1.324873e-001, -1.411509e-002, 1.937606e-002, 3.764494e-003, -2.011505e-002, -3.985126e-002, 5.568940e-002, -4.687549e-003, -1.044132e-002, -6.687394e-003, 2.133297e-002, -6.249978e-002, 3.803898e-002, 1.727814e-002, -8.683671e-002, -7.395222e-003, -2.465084e-002, 1.713835e-002, 4.673267e-002, -3.878252e-002, -4.701616e-002, 1.094503e-001, -2.435143e-002, 1.557830e-002, 5.508295e-003, -8.663098e-003, 1.105323e-002, 1.077779e-002, 1.542623e-003, 6.565576e-002, 4.969535e-002, 1.929139e-002, -1.379220e-002, 2.703297e-002, 6.506250e-002, 3.514652e-003, 2.772525e-002, -1.041356e-002, 8.189594e-002, 8.395698e-002, -6.450996e-002, -1.036351e-001, 5.389184e-002, -1.041931e-001, -1.045950e-001, -6.714422e-003, 5.362556e-003, -2.440836e-002, 2.303826e-002, 4.628402e-004, 9.951935e-004, -1.840688e-002, -1.023120e-002, 2.745560e-002, -2.850319e-002, -3.529786e-002, 1.470169e-002, 2.239862e-002, 3.878777e-002, -8.950691e-002, -1.235853e-001, 2.210287e-002, -2.526695e-002, 8.886082e-002, 1.167815e-001, 7.482474e-002, -5.556746e-002, -1.086096e-002, 5.849933e-002, -3.297025e-002, 4.639628e-002, 3.674184e-002, 6.568354e-002, 1.297117e-002, -1.977176e-002, -2.267175e-002, -3.083441e-002, 8.249880e-003, 2.502643e-002, 7.628006e-003, -6.030308e-003, 3.590129e-002, -4.753337e-002, -7.991985e-003, 1.605195e-001, -9.983013e-003, 1.601893e-001, 7.030021e-002, 8.226219e-002, -1.806070e-002, 8.599787e-002, -1.186220e-001, -3.624335e-002, -3.415647e-002, 4.609902e-003, 7.355673e-003, -2.042143e-002, -2.255870e-002, 3.545300e-002, -1.519030e-003, -2.514572e-002, -2.333042e-002, -1.902436e-002, -2.283570e-002, -1.218320e-001, 2.919618e-002, 3.876658e-002, -2.899197e-002, -4.722296e-002, -4.994361e-002, -2.057855e-003, -8.860063e-002, 1.434096e-002, 1.671849e-004, 7.263765e-002, 4.314607e-002, 3.622063e-002, 3.092765e-002, 2.438435e-002, -1.250289e-002, -1.083838e-002, -2.692799e-003, 2.090108e-002, -1.704991e-002, -2.572771e-002, 1.232058e-002, 4.996192e-002, 2.680235e-002, -2.376067e-002, 2.667687e-002, -1.080281e-001, -5.323565e-002, 6.035151e-002, -2.755127e-002, 9.921960e-005, 5.876235e-002, -1.383512e-002, 1.391882e-002, -3.585136e-002, -5.759681e-002, -2.340328e-002, -1.676693e-002, -1.473415e-002, -8.211047e-003, 8.638765e-003, 2.392182e-002, 2.850741e-002, -3.785003e-002, -8.404284e-002, -7.768067e-003, 1.726346e-002, 2.800980e-002, 5.266851e-002, 5.983305e-002, -9.604944e-002, -8.764519e-003, -6.454577e-002, 4.537082e-002, -4.349949e-002, -1.836730e-002, -1.214942e-002, 1.623276e-002, 1.791805e-002, 3.490323e-002, -1.930742e-002, -2.507466e-002, -8.614763e-003, -1.788294e-002, 6.737330e-003, 2.053743e-002, 2.512965e-002, 1.753733e-002, -3.171954e-002, -1.584519e-002, 1.076745e-002, -9.328535e-003, 4.609128e-002, -1.006846e-003, -5.977661e-002, 1.943354e-002, 3.498621e-002, -3.953445e-002, 7.744212e-003, -6.673036e-003, 1.425945e-002, 3.264644e-002, -9.473013e-003, -4.468621e-002, -1.549280e-002, 7.624664e-003, 1.222235e-002, 7.158749e-003, -4.524865e-003, -1.790201e-002, 1.788629e-002, 5.207317e-002, -3.741921e-002, -4.398644e-002, 6.865777e-002, -2.506851e-002, 8.414856e-002, -2.613427e-002, -2.845440e-002, 8.002009e-002, -4.005720e-002, 9.972286e-003, 2.550540e-002, -2.155716e-002, 5.298803e-003, 5.375593e-004, -1.831876e-002, 8.009398e-004, 1.355399e-002, 1.046174e-003, 1.818944e-002, -4.173595e-003, -2.243551e-002, 1.115765e-002, -1.036034e-002, 1.244612e-002, -3.323805e-002, -1.160875e-003, 5.026525e-002, -6.978218e-003, 3.800837e-002, -4.744665e-002, 8.667819e-004, 1.369177e-002, 3.721751e-002, 1.483311e-003, 1.982950e-002, 1.456151e-002, -1.641616e-002, -4.121480e-003, 6.322562e-003, 4.786444e-003, 8.783899e-003, 1.539927e-002, 5.626951e-003, -1.085993e-002, -7.636995e-003, 3.721632e-002, -3.849149e-002, -1.183342e-002, 2.012291e-002, 8.536125e-003, -3.675773e-002, -7.250788e-002, 4.383863e-002, 5.553702e-003, -3.527056e-002, 3.253155e-002, 2.678564e-002, 1.298489e-002, -4.382341e-003, -2.125168e-002, -6.911089e-003, 1.414547e-002, -1.442957e-003, -9.126242e-003, 8.747534e-003, 2.657706e-002, -1.137159e-002, -2.676735e-002, 3.142676e-003, 9.428698e-003, -3.026350e-002, -9.292218e-003, 1.725036e-002, 1.598660e-003, 3.987042e-002, -4.677994e-002, 1.817213e-002, -3.144422e-002, 1.031096e-002, 2.902936e-002, 2.126374e-002, -4.351414e-003, -3.493188e-003, 1.082894e-002, 1.906229e-003, 6.810365e-003, 7.863498e-004, -7.844785e-003, 9.771315e-003, 6.803721e-003, -1.680627e-002, -1.291872e-003, 1.465747e-002, -2.067652e-002, -1.684554e-003, 1.705489e-003, -3.966363e-002, 1.104966e-016, -2.499200e-003, -6.267413e-003, 1.908541e-003, 9.861559e-003, -2.843928e-002, 3.818038e-002, -4.612108e-002, 4.868398e-002, 1.433613e-002, -3.819579e-002, 4.976625e-002, -4.976625e-002, 3.819579e-002, -

© ISO/IEC 2004 — All rights reserved


Copyright International Organization for Standardization
Provided by IHS under license with ISO
No reproduction or networking permitted without license from IHS
Not for Resale

1.433613e-002, -4.868398e-002, 4.612108e-002, -3.818038e-002, 2.843928e-002, -9.861559e-003, -1.908541e-003, 6.267413e-003, 2.499200e-003, 2.824566e-002, -1.400133e-002, -5.499420e-002, 5.041536e-002, 2.913311e-002, -3.184747e-002, -2.853066e-002, 4.155424e-002, -5.732499e-003, -4.367888e-003, 4.999551e-002, 3.041835e-002, 7.305041e-003, -6.020276e-002, -1.479054e-002, -4.128220e-002, 3.285587e-002, 4.322701e-002, -2.344206e-002, -7.615533e-002, 5.881960e-002, 7.768759e-002, -4.652967e-004, -1.038583e-002, 8.585965e-002, -5.897571e-002, 6.417310e-002, -1.143122e-001, 3.171085e-002, 2.245189e-002, -2.777414e-002, -1.537160e-003, 1.275861e-002, 4.990897e-002, 4.948580e-003, -5.738251e-002, 1.339561e-003, 2.383691e-002, 7.770912e-002, -3.425771e-002, 2.056419e-002, 1.524980e-002, -9.987483e-002, 1.355836e-001, 1.024579e-002, 2.191702e-002, 1.215916e-002, 2.890293e-002, -5.156283e-003, 5.430999e-002, -8.607917e-003, -2.775844e-002, -4.691093e-002, 6.892262e-003, 3.947377e-002, 2.306073e-002, -2.721131e-002, -2.302458e-002, 3.853821e-002, 3.018964e-002, 5.286921e-002, 2.308533e-002, 1.841064e-002, 1.676083e-002, -2.245778e-003, -2.325860e-004, 1.111857e-001, -4.945671e-002, -1.166214e-001, -4.906330e-002, 1.218800e-001, 9.738605e-002, -2.064319e-002, 8.662024e-002, -1.297134e-002, -4.479538e-002, 2.290184e-002, -3.916458e-003, -2.139721e-002, -1.094235e-003, -1.332454e-003, 1.029286e-002, 1.475535e-002, -2.280859e-002, -3.321132e-002, -5.862851e-002, -7.637769e-002, 3.983309e-002, 1.223425e-002, -5.082519e-002, -4.999438e-002, 3.538323e-002, -1.541509e-002, -1.442499e-001, -6.075971e-002, -4.858809e-002, 2.393814e-003, -2.066774e-002, 1.367511e-002, 1.607660e-003, -6.198792e-003, -9.648314e-003, -3.656808e-002, -1.659071e-002, 1.737475e-003, -3.003925e-002, -5.577337e-002, 4.875178e-002, 5.086285e-002, 3.239137e-003, 2.830880e-002, -6.016572e-003, 9.980089e-002, -7.298510e-002, -8.730574e-002, -8.670337e-002, 2.799673e-002, -3.652779e-002, 2.191882e-002, 7.061770e-003, -1.366432e-002, 7.853932e-003, 1.896492e-002, 9.232166e-003, 2.842762e-002, 2.874592e-002, -1.794186e-002, 4.137316e-002, 3.479139e-002, 2.992428e-002, -2.005259e-002, 2.002720e-002, 4.659886e-002, -5.381216e-002, 1.313331e-002, 1.873746e-002, -1.005794e-002, 2.521344e-002, 2.177379e-002, -4.047578e-002, 1.127531e-001, -3.647929e-002, 3.808830e-002, 2.297929e-003, -3.510131e-002, -3.035087e-002, 1.425317e-002, 2.985583e-003, -1.306707e-002, 2.305537e-003, -1.316762e-002, 1.685330e-002, -7.777678e-003, 4.246267e-003, -8.692681e-003, -6.610625e-002, 4.577461e-002, 7.200668e-002, -4.712452e-002, 8.898353e-002, -2.603358e-002, -4.343395e-002, -5.421872e-003, -4.077857e-002, -3.303252e-003, -3.283010e-003, 2.042556e-002, -6.567589e-003, -1.549626e-002, -2.619250e-002, 1.413069e-002, 1.329129e-002, 1.019941e-002, -5.393334e-003, -6.006185e-003, 5.049092e-003, -1.280218e-002, -5.855372e-003, 2.969485e-002, 6.491613e-003, 3.459515e-002, 3.420664e-002, -2.134386e-002, 4.884853e-002, -1.606446e-002, 8.418324e-003, -4.500943e-002, -7.356252e-003, 3.587883e-002, -5.568908e-003, -5.832501e-003, -1.956735e-002, -7.411605e-004, -1.903672e-003, 1.349631e-002, 5.898768e-003, -6.425168e-003, 1.957076e-002, 2.398984e-002, -4.852627e-003, -2.984706e-002, 1.259596e-003, 1.003033e-002, 2.148492e-002, 2.155002e-002, 8.006191e-003, 3.587516e-002, 3.971973e-002, -4.225107e-002, -8.214524e-003, -7.902433e-003, -2.665298e-003, -9.484510e-003, -4.068293e-003, 2.960816e-003, 7.664340e-003, 3.472635e-003, -1.885439e-003, 8.329870e-003, -1.222165e-002, -6.003411e-003, 1.781305e-002, 4.297317e-003, 1.042990e-002, 1.638944e-002, 1.556933e-002, -3.854181e-003, 2.266903e-002, -1.013351e-002, 3.852046e-002, 1.341828e-002, -2.741674e-002, -9.659800e-003, 1.228239e-002, 1.994185e-002, -6.133594e-003, -2.470419e-002, -9.367420e-003, -6.548848e-003, 1.564663e-003, 1.203548e-002, 1.197068e-003, -1.101590e-002, 4.439663e-003, 7.882450e-003, 2.503068e-003, -4.006210e-003, 1.648413e-002, -2.543484e-003, -1.036920e-002, 5.390100e-002, 1.615294e-002, 3.237752e-002, 6.359037e-003, -1.792845e-002, 1.675393e-002, 1.636558e-002, 2.835137e-002, 1.426461e-002, -3.362116e-002, -1.174556e-002, 1.568894e-002, 1.443734e-002, 2.669527e-003, -1.527337e-002, -9.195083e-003, -1.378313e-002, 9.168199e-003, 1.811982e-002, 5.722846e-003, -1.387373e-002, 1.871985e-002, 1.693785e-002, -1.201614e-002, 4.468976e-002, 1.859519e-003, 5.438879e-002, -5.817171e-002, -2.021896e-002, 3.847915e-002, 4.476444e-002, -2.776780e-003, -1.226828e-002, -9.308018e-003, -2.454089e-003, 8.343014e-004, -2.450502e-003, 3.557032e-003, 8.647107e-003, -2.340252e-003, -1.351359e-003, 2.340214e-003, 7.875912e-003, 2.968480e-003, -1.313121e-002, 1.432545e-002, 4.260233e-002, -9.407502e-003, -1.517038e-003},

{2.413154e-003, -5.148165e-003, 3.043939e-002, -6.006537e-002, 2.377759e-002, -2.105118e-002, 1.128350e-002, 2.196603e-002, -6.582401e-003, -1.277290e-004, -1.076784e-002, -4.932484e-002, -4.932484e-002, -1.076784e-002, -1.277290e-004, -6.582401e-003, 2.196603e-002, 1.128350e-002, -2.105118e-002, 2.377759e-002, -6.006537e-002, 3.043939e-002, -5.148165e-003, 1.725068e-003, 2.280045e-002, 3.295054e-002, -2.800823e-002, 4.275161e-002, -1.886605e-002, 1.946625e-002, 3.530490e-002, 3.889583e-002, -1.105749e-002, -1.295450e-002, -1.108848e-002, 3.732965e-002, 4.912473e-002, 6.213391e-002, 6.076373e-002, -2.341738e-003, -1.214910e-002, -3.876761e-002, 3.607959e-002, -8.486402e-002, 5.798275e-002, -2.998600e-003, -1.461489e-002, -5.353315e-002, 6.668266e-002, 2.012896e-002, -7.262630e-002, 3.602643e-003, 2.842660e-002, -2.817475e-002, -1.298008e-002, -1.020432e-002, -3.466885e-002, -3.340927e-002, 2.877110e-002, 6.532881e-002, 1.923914e-002, -1.189837e-002, 3.831313e-002, 3.016057e-002, 9.359230e-002, -1.513662e-001, 5.819598e-002, 8.296370e-003, 2.200998e-002, 9.660089e-003, 1.236407e-001, -1.618136e-002, -


© ISO/IEC 2004 — All rights reserved

Copyright International Organization for Standardization
Provided by IHS under license with ISO
No reproduction or networking permitted without license from IHS
Not for Resale

3.763472e-003, 3.884901e-002, 2.305716e-002, -4.353624e-002, 3.307334e-003, -4.463379e-002, 7.629694e-004, -1.979760e-004, 3.648211e-002, -2.004919e-002, -7.190326e-003, 2.695427e-002, 2.421970e-002, -3.661776e-002, -8.987065e-003, 4.407470e-002, -1.329799e-001, 1.934712e-001, -2.546991e-002, -3.810857e-002, -5.855279e-003, -1.587993e-002, -1.110135e-002, 6.583619e-002, -2.012896e-002, -1.786401e-002, 8.724793e-003, 7.349036e-003, 2.997501e-002, -2.601301e-002, -2.859930e-003, 1.713925e-002, -3.093055e-002, -3.642375e-002, -2.771056e-002, 7.662386e-003, -1.598136e-003, -5.749571e-002, -2.348818e-002, -9.819132e-003, -2.929895e-002, 5.742164e-002, -3.894159e-002, 3.853578e-002, -4.659788e-002, 5.328179e-002, -7.706584e-002, 2.443919e-002, -7.002677e-002, -5.182378e-002, -1.039880e-002, -1.553700e-003, 1.859215e-002, -6.324721e-003, -1.347102e-002, 5.409039e-002, 1.864010e-002, -1.029060e-002, -3.144584e-002, -3.168675e-003, -5.400395e-003, -2.706309e-002, 1.055997e-001, -6.453318e-002, -5.176979e-003, 1.120203e-001, -1.409783e-001, -1.486792e-001, 1.460384e-001, -5.521248e-002, 5.697783e-002, 9.801314e-002, 3.744797e-002, 1.581275e-002, 1.001590e-002, -3.813869e-002, -3.934433e-002, -2.306951e-002, 2.620547e-002, 4.823098e-002, 3.995779e-003, -6.388843e-003, -1.416755e-002, 2.344680e-002, 2.694397e-002, -2.969001e-002, -1.471258e-003, -2.403349e-002, -7.671070e-003, 1.277130e-001, -4.279033e-002, 6.410804e-003, 1.862867e-002, 2.857789e-002, -4.836141e-002, 1.717253e-002, -1.913078e-002, -5.434653e-002, -6.396990e-004, -8.988546e-004, 9.882212e-003, -4.025676e-002, -5.862875e-003, 2.988822e-002, -2.246478e-003, -5.788260e-004, 4.867904e-002, -1.474097e-002, 3.932033e-002, 9.856716e-002, -4.205227e-002, -1.231746e-001, -1.657568e-003, 6.909700e-002, -2.576066e-002, 4.436434e-002, -5.715663e-002, 6.233034e-004, -9.959539e-003, 1.056229e-002, 2.419831e-002, 5.016513e-003, 1.751485e-002, -8.225093e-003, -1.235272e-002, -6.250115e-004, 1.214146e-002, -6.559419e-003, -9.520071e-003, -2.382972e-002, 7.356663e-003, -7.426205e-002, 3.846698e-002, -8.113087e-003, -3.412630e-002, -4.134422e-002, 3.410908e-003, 8.157462e-002, -4.531021e-003, 1.413939e-002, -2.557891e-002, 1.506801e-002, -1.314439e-002, 2.238517e-002, 1.607445e-002, -2.094367e-002, -8.841536e-003, -1.126415e-002, -6.174476e-003, 7.335462e-003, 5.059758e-003, -2.897633e-002, 9.484911e-003, 2.991171e-002, -4.777573e-002, 3.285560e-002, 8.866186e-002, -3.341811e-002, -1.096325e-001, 6.277136e-002, -4.725295e-002, -1.054207e-002, 6.187191e-002, -2.553209e-002, -3.498816e-002, 2.935598e-002, 1.230913e-002, 1.463856e-003, -8.208098e-003, -2.002316e-002, 8.050832e-003, -1.293989e-002, 2.691124e-003, -6.744248e-003, 7.144714e-003, 5.534094e-003, -2.847394e-002, 5.530612e-002, -2.219182e-003, -1.908063e-002, 6.469627e-002, 7.797883e-002, -1.000926e-001, -1.473823e-002, 1.000225e-001, -7.733077e-002, -8.503786e-003, 9.884545e-003, 1.327442e-002, 3.381111e-002, -1.510231e-002, -2.318724e-002, 1.538606e-003, 8.301959e-003, 1.342454e-002, -2.040156e-002, 8.784425e-003, -1.401860e-003, -4.993127e-003, 2.714673e-002, -5.894237e-002, 6.644290e-002, 1.281401e-002, -7.854025e-002, -5.941772e-002, 3.833829e-003, 5.910702e-002, -7.741660e-002, 1.144543e-002, 6.252827e-003, 9.488960e-004, 1.768921e-002, 2.454309e-003, -8.554654e-003, -2.205936e-002, -1.006113e-003, -2.126035e-003, -7.612603e-003, 7.857209e-003, 1.537100e-003, -1.794547e-002, -1.177877e-002, 2.780599e-002, 1.026281e-002, -4.249318e-002, 6.713348e-002, 2.626209e-003, 3.637092e-002, -2.900001e-002, -1.180226e-002, 1.194161e-002, 1.034815e-002, -3.635403e-002, 7.952496e-003, 2.183276e-002, 1.694524e-003, -1.491509e-002, 5.543190e-003, 2.332144e-003, 9.365749e-003, -2.975324e-003, -1.577696e-002, 7.032407e-003, 9.625403e-003, 6.625746e-004, -3.167365e-002, 9.536910e-003, 1.676433e-002, -3.207279e-002, -2.994401e-002, 7.205210e-017, 7.909932e-003, -9.889356e-003, -2.157799e-002, 3.161755e-002, -1.790596e-002, -2.956798e-002, 2.178727e-002, 4.029868e-003, 1.685275e-003, 2.396032e-002, -7.130179e-003, 7.130179e-003, -2.396032e-002, -1.685275e-003, -4.029868e-003, -2.178727e-002, 2.956798e-002, 1.790596e-002, -3.161755e-002, 2.157799e-002, 9.889356e-003, -7.909932e-003, 2.650459e-002, -5.509708e-002, 1.163435e-001, -5.409994e-002, -6.569170e-002, 5.076486e-002, -1.548234e-002, -2.801437e-002, -1.739383e-002, 2.414020e-003, -2.929748e-002, -3.236367e-002, -4.452395e-002, -5.121294e-003, 5.668512e-003, -5.382876e-005, -1.366724e-002, 2.577265e-003, 3.761554e-002, -1.316987e-001, 7.548270e-002, 4.803207e-002, -2.762200e-002, -2.394058e-002, 3.672161e-002, 3.852858e-002, 3.386546e-003, 1.190277e-001, -1.411721e-002, -3.081602e-002, 3.281527e-002, 3.931669e-002, 4.656363e-002, 3.750927e-002, -9.649769e-003, -3.809722e-003, -1.664855e-002, 4.134120e-002, 1.637408e-002, -7.820160e-004, -2.873981e-002, 1.170093e-002, -3.875942e-002, 1.141389e-001, -1.204257e-001, -2.521906e-002, -4.158829e-003, -4.315291e-002, -3.058890e-003, 2.212269e-002, -2.268427e-002, 2.771623e-002, 4.754504e-003, 3.294995e-002, 2.574870e-002, 3.520782e-003, 2.057159e-002, 3.874560e-002, -1.168261e-002, -3.673416e-002, -5.983477e-002, 3.675779e-002, -2.173909e-002, -4.721818e-002, 1.325357e-002, 7.339550e-002, -5.016676e-002, 7.854881e-002, -2.108365e-002, -3.768889e-002, 1.911105e-002, 7.643092e-002, -2.052182e-003, -3.380812e-003, 2.314624e-002, 5.929870e-003, 2.255057e-002, -1.429390e-002, 7.523190e-003, 1.790030e-002, -6.435103e-003, 4.849217e-002, 5.365795e-002, 1.655774e-002, -1.244667e-002, 3.856294e-002, -1.675738e-002, -1.691595e-002, 8.406976e-002, -5.065761e-002, -1.963947e-003, 3.035040e-002, 3.891341e-002, -1.658330e-001, 5.183133e-002, -6.973265e-002, 2.902439e-002, -2.960406e-002, -1.129102e-002, -1.487444e-002, -2.403822e-002, 4.120249e-003, 2.716048e-002, 2.959341e-002, -9.973086e-003, 5.809914e-003, 2.312161e-002, 8.499384e-003, 1.391908e-002, 3.109900e-003, -8.580581e-003, -

© ISO/IEC 2004 — All rights reserved


Copyright International Organization for Standardization
Provided by IHS under license with ISO
No reproduction or networking permitted without license from IHS
Not for Resale

3.592039e-002, 2.079861e-002, -4.699343e-002, 6.952479e-002, -2.715326e-003, -3.001406e-002, -6.215949e-002, 9.331641e-002, -3.009571e-002, -2.509861e-003, -3.135564e-002, -3.428310e-003, 1.231809e-003, -8.016867e-003, -2.893285e-003, -1.817764e-002, -7.465460e-003, 2.363920e-003, 3.428657e-003, 6.884622e-003, -4.795975e-002, -2.706168e-003, -2.598777e-002, -1.987801e-002, 9.935509e-002, 4.468163e-002, -7.832766e-003, -1.296043e-003, 2.164084e-002, -8.015829e-002, 3.580076e-002, 7.290873e-002, -4.913038e-002, 4.260423e-002, -7.224402e-003, -6.619432e-003, 2.386071e-002, 1.985236e-003, -8.261974e-003, -2.641195e-003, -2.828816e-002, 1.659380e-003, 9.178713e-003, 1.550195e-002, -1.354130e-002, 4.114178e-002, 1.303111e-002, -3.659347e-002, -3.138000e-003, -1.201295e-002, -1.070268e-001, 1.526610e-002, 2.014768e-002, 4.352037e-003, -3.272339e-002, 4.748981e-002, 1.688502e-002, 5.683623e-003, 2.708996e-005, -4.630548e-003, -1.186512e-002, -1.743869e-002, -4.312155e-003, -1.067308e-002, -2.305563e-002, -6.822311e-003, -7.576030e-003, -4.257907e-006, 2.884978e-002, -5.836341e-002, 1.013989e-002, -1.224329e-002, 2.817535e-003, -1.053903e-003, 8.515308e-002, -1.654411e-002, -1.788387e-002, -6.209242e-002, 3.621887e-002, -5.368531e-003, -1.475554e-002, 3.675360e-002, -2.343192e-003, -1.603846e-002, -1.028913e-002, -1.224657e-003, 7.643561e-003, -9.997249e-004, 1.181217e-003, -1.863702e-002, -1.748838e-002, 2.299039e-002, 1.301223e-004, -1.346983e-002, -4.732465e-002, 6.213811e-002, 1.283681e-001, -8.297758e-002, 2.060902e-002, 1.210310e-002, 4.205635e-002, -5.532666e-002, 5.184386e-002, 1.690136e-002, -2.185179e-002, -1.560326e-002, -3.337616e-002, -1.751941e-004, 1.512656e-002, 5.466800e-003, -5.326016e-004, -2.100997e-002, 1.063534e-002, 1.168143e-002, -2.886369e-002, 2.410073e-002, -9.193328e-003, 3.654403e-004, -8.215507e-002, -4.754159e-002, -9.154621e-003, 8.721226e-002, -5.793228e-002, -3.254726e-002, 5.524994e-002, -1.950023e-002, 6.331553e-003, 7.669771e-003, -2.155015e-002, 1.464191e-003, 1.415000e-002, -6.068847e-003, 1.560461e-002, 6.553310e-003, 6.337696e-003, -1.853080e-002, -1.996041e-002, 5.556440e-002, -2.617725e-002, -4.840662e-002, 9.112371e-002, 1.019503e-002, 3.332941e-002, -2.098648e-002, -1.486155e-002, -1.253018e-002, 1.550564e-002, 8.014294e-003, -1.028579e-003, 5.830171e-003, -4.892484e-003, -1.727409e-002, -4.935336e-003, 1.695153e-002, 1.046270e-002, -6.660309e-003, 8.109021e-003, 3.961218e-004, 4.804916e-003, -9.122946e-003, 6.190257e-003, 2.090523e-002, -7.893202e-003, -7.621463e-003, 1.562026e-003, 1.619394e-002, -2.260877e-002, -1.252417e-002, 1.576816e-002, -7.757533e-005, -2.908743e-003, 2.946337e-002, 6.110616e-004, -1.003675e-002, -1.600922e-002, 4.081717e-003, 2.577980e-003, 6.750255e-003, 1.578187e-002, -5.752345e-003, -1.032010e-002, 1.264921e-002, 6.352643e-005, -7.340295e-003, 1.370660e-003, 1.155628e-002, -1.375376e-002, 6.982617e-003},

{-3.434381e-003, -4.503104e-003, -1.754895e-002, 2.578073e-002, -2.824171e-002, 1.954380e-002, 5.891859e-003, 1.546338e-002, -3.140085e-003, 1.123263e-002, -1.637444e-002, -9.205289e-003, -9.205289e-003, -1.637444e-002, 1.123263e-002, -3.140085e-003, 1.546338e-002, 5.891859e-003, 1.954380e-002, -2.824171e-002, 2.578073e-002, -1.754895e-002, -4.503104e-003, 3.788452e-003, -1.495741e-003, -3.952218e-002, 7.154933e-002, -7.675467e-003, 1.703230e-002, 2.418992e-002, 5.740387e-002, 9.835386e-003, -2.019732e-002, 2.885036e-002, 1.770415e-002, 6.465268e-002, 3.108528e-002, 8.101712e-004, -3.038748e-002, 2.006917e-002, 4.536537e-002, -4.144106e-002, -7.156503e-002, 1.014691e-001, -3.839260e-002, -2.229454e-002, 3.288786e-002, -4.672767e-002, 3.050850e-002, -5.996441e-003, 1.188382e-002, 2.824807e-003, 2.638992e-002, -1.564619e-002, -2.291397e-003, 1.857674e-002, -2.440795e-002, -9.315543e-003, -5.395379e-002, -3.578713e-002, -1.994781e-002, -1.246733e-002, -1.739393e-002, -1.380613e-002, 2.957632e-002, 1.230009e-002, 6.222899e-002, -2.174317e-002, -4.247998e-002, 1.596084e-002, 5.098722e-002, 6.579107e-002, -1.031847e-001, 8.765727e-002, -7.410235e-003, 1.849975e-002, 3.389197e-002, 1.583630e-002, 2.301453e-002, 3.424160e-002, -1.270257e-002, -3.436213e-002, -1.187111e-002, 5.370867e-003, -2.492201e-002, 4.963750e-002, 3.636933e-002, 5.192702e-002, -3.075776e-002, 3.308069e-002, 4.043819e-002, 1.487462e-002, 1.128810e-001, -6.246405e-002, -9.806310e-002, 9.537070e-002, -2.645071e-003, 2.242639e-002, 7.530946e-002, -1.300932e-002, 2.145097e-002, 7.551680e-002, 3.430294e-002, 3.018374e-002, -1.992667e-002, -3.499592e-002, -4.174647e-002, -2.191382e-002, -2.624865e-002, -2.034705e-003, -6.605853e-002, -7.944137e-002, 4.626227e-002, -1.325423e-001, 8.733351e-002, 1.875743e-002, -9.267898e-002, 9.305387e-002, -3.654884e-002, -6.698353e-002, 4.493733e-002, -5.100006e-002, -2.982198e-002, 3.698070e-002, -1.041681e-003, -4.330637e-002, -5.810333e-002, 2.310371e-002, -8.970046e-003, -1.731521e-002, -2.353174e-003, 3.454982e-002, -2.891310e-002, 3.442221e-002, -1.231927e-002, 6.235264e-002, -2.335483e-002, -4.287501e-002, -2.438430e-002, 1.168441e-001, -1.470298e-001, 2.814282e-002, 3.237339e-002, 2.579470e-002, 5.323075e-002, 3.823846e-002, 3.113521e-002, -1.333376e-002, 1.223552e-002, 3.090500e-002, 2.934095e-002, 2.138392e-002, 1.511937e-002, -2.425152e-003, 4.456037e-002, 8.147235e-002, -7.354801e-002, 4.269574e-002, -6.192211e-002, -1.087232e-001, 2.634045e-002, -1.105451e-001, -1.497781e-002, 4.891740e-002, -1.982013e-002, 4.970509e-002, 5.356242e-002, -1.498142e-002, 6.060190e-002, 4.449509e-003, -3.506153e-002, -1.657727e-002, -1.070462e-002, 7.587129e-003, 1.255200e-002, -4.364686e-002, -2.563852e-002, 3.116289e-002, -4.173409e-002, 8.020799e-002, 2.544663e-002, -4.517835e-002, 1.115073e-001, -5.505776e-003, 9.011078e-002, -4.087505e-002, 7.455417e-003, -1.234737e-002, 1.142079e-002, -1.861064e-002, 3.741088e-002, -1.703773e-002,


© ISO/IEC 2004 — All rights reserved

Copyright International Organization for Standardization
Provided by IHS under license with ISO
No reproduction or networking permitted without license from IHS
Not for Resale

1.016363e-002, 3.736065e-004, 1.158777e-002, -1.363027e-003, 2.151393e-002, 1.491559e-003, 2.590485e-002, -2.044980e-002, -4.271073e-002, 4.348069e-002, -2.791321e-002, -1.840782e-003, 1.666899e-002, -3.721309e-002, -7.447177e-002, -3.528592e-002, -7.642620e-004, -3.564009e-002, 1.676120e-002, 2.974779e-002, 1.764094e-002, -2.082017e-002, 9.977708e-003, 5.210823e-003, 5.895220e-003, -1.048037e-002, -9.476850e-003, -1.325780e-002, 1.157104e-002, -9.097977e-004, 7.036340e-003, 3.098788e-002, 4.916612e-003, -1.831104e-002, 3.414649e-002, -5.265442e-002, -3.480021e-002, 3.882448e-002, 5.462035e-002, -2.472463e-002, 9.723623e-003, 4.348182e-002, -1.459844e-002, -2.411926e-002, -4.588782e-003, 7.277365e-003, 1.292382e-002, 6.257184e-003, 5.151623e-003, -2.698988e-003, 1.169452e-002, -8.826365e-003, -4.512951e-003, -4.011191e-003, 2.971376e-003, 1.526548e-002, -7.206444e-003, -7.164895e-002, 3.753728e-002, -1.414427e-002, -3.239153e-002, -1.049475e-001, 3.594918e-002, 2.884541e-002, -3.795734e-002, 8.856516e-003, 2.762149e-002, -7.330058e-003, -2.609999e-002, 7.839460e-003, 1.512184e-002, 1.112813e-002, -3.502586e-003, -2.394157e-003, 9.775546e-003, 5.906904e-003, -3.378228e-003, -8.959434e-003, 1.535082e-002, -1.333556e-002, -1.028007e-002, -4.144136e-002, -4.854356e-003, 8.751003e-002, 8.451235e-003, 1.817596e-002, -5.420858e-002, 3.551614e-002, 3.807548e-002, -9.749464e-003, -1.828261e-002, 1.343079e-003, 6.373818e-003, 1.151964e-002, -1.364812e-005, -1.451307e-003, 1.083913e-002, 9.972212e-003, 1.135552e-002, -1.773509e-003, 7.217507e-003, -3.243953e-003, -5.074907e-002, -9.905448e-003, 3.130045e-002, -4.373413e-002, 8.337790e-004, 2.014155e-002, -3.413680e-002, 1.267605e-002, 2.982246e-002, -7.328158e-004, -1.717111e-003, -6.365064e-003, -1.010346e-002, 9.248489e-003, -2.119744e-003, 7.927023e-003, -6.845546e-003, -4.493577e-004, 8.357411e-003, 2.608332e-003, -7.188219e-003, -2.160648e-002, -7.395252e-003, 1.396047e-002, -4.858560e-002, 1.665426e-002, 1.941127e-002, -2.887074e-002, -8.994748e-018, -5.266632e-003, 1.506828e-003, -1.802148e-002, 1.432915e-002, 1.111231e-002, 1.258976e-002, -2.342894e-003, -1.035315e-003, 2.744981e-002, -2.393349e-002, 9.771109e-004, -9.771109e-004, 2.393349e-002, -2.744981e-002, 1.035315e-003, 2.342894e-003, -1.258976e-002, -1.111231e-002, -1.432915e-002, 1.802148e-002, -1.506828e-003, 5.266632e-003, -6.322817e-003, 4.177152e-002, -7.673711e-002, 2.588589e-002, -6.666614e-002, -7.967748e-003, 4.547664e-002, 1.720871e-002, 1.277470e-002, 6.645847e-003, -2.291709e-004, -1.020652e-003, -2.137839e-003, -7.601346e-002, -3.183393e-002, -2.123924e-002, 4.527671e-002, 7.214899e-003, -2.210405e-002, -7.647158e-002, 1.065261e-001, -5.078413e-002, 7.438590e-003, 2.084602e-002, -4.762248e-002, -1.358003e-003, -5.570190e-003, -4.745367e-002, 5.018652e-002, -8.169282e-002, 1.031917e-002, 8.990589e-002, 2.427504e-002, 3.576021e-002, 1.905558e-002, -7.392422e-002, -3.019324e-002, -3.393798e-002, 4.405173e-002, -1.328686e-001, -1.159298e-001, 6.312920e-002, -3.627723e-002, -3.232055e-002, -3.513638e-002, 5.985041e-002, 2.791660e-002, 1.181041e-001, 2.454776e-002, -1.278788e-001, 9.876965e-002, -7.726855e-005, -7.152452e-004, 1.625308e-002, -5.701384e-002, -3.085452e-002, -9.744375e-003, 1.510848e-002, 8.307598e-002, -2.302801e-003, -2.640331e-002, -4.630002e-002, 7.623650e-002, -8.676547e-003, -1.861302e-002, 8.191064e-002, -4.570345e-002, -8.705506e-002, -5.167901e-002, -1.434061e-001, -7.337970e-002, 1.454445e-001, -8.567389e-003, 1.501643e-002, -2.499663e-002, 2.173868e-003, 2.889803e-002, 1.679730e-002, -3.534494e-002, -1.909374e-002, -4.585081e-002, 3.215144e-002, 8.529357e-002, -2.905428e-002, -1.518867e-002, -2.139404e-002, 3.925691e-002, -7.673829e-003, 4.745378e-002, -1.900583e-002, 1.163916e-001, 7.277454e-003, 7.247339e-002, -7.875914e-003, -1.763157e-002, -1.339949e-001, 4.605985e-002, -2.754000e-002, 3.879478e-002, 2.762202e-002, -3.675306e-003, 4.982941e-002, 1.191428e-002, 8.850077e-003, -3.112600e-002, -1.867372e-002, 2.805963e-002, -3.636997e-002, 2.673846e-002, 2.904173e-002, -4.276276e-002, 5.330112e-002, -7.306424e-002, 2.252311e-002, 4.560673e-002, -6.036559e-002, -6.491146e-002, -1.389984e-002, 1.070326e-001, -6.331759e-003, -9.653138e-003, -3.629120e-004, -6.447048e-002, -1.375249e-002, 8.800745e-003, 2.425415e-004, -1.783394e-002, 1.448108e-002, 2.367642e-002, 1.458530e-002, -7.400391e-003, -2.827234e-002, -2.667692e-003, -2.630456e-002, 2.487299e-002, -1.244313e-002, 8.374046e-002, -3.006351e-002, 8.060461e-002, -5.880812e-002, 5.118440e-002, -9.978565e-002, -5.107881e-002, 7.176938e-002, -1.005221e-002, 5.102582e-002, 6.107986e-003, -1.897213e-002, -1.371771e-002, -2.147246e-002, -9.677337e-003, 6.374395e-004, -1.964172e-003, 1.363638e-002, 5.246248e-002, 2.000806e-002, -2.058189e-002, 1.469599e-002, -8.420947e-003, 5.698961e-002, -8.065985e-002, 1.758846e-002, -8.895706e-003, -4.552606e-002, -3.319994e-002, 2.276588e-002, 2.579301e-002, 5.264026e-002, -9.481884e-003, -2.026305e-002, -2.232005e-002, -6.034043e-003, -1.396031e-004, 1.103818e-002, 1.213143e-002, -2.005231e-002, -1.308366e-002, 7.558722e-003, 4.219610e-002, -2.042465e-002, 1.345305e-002, 5.276315e-002, -6.513050e-002, -7.834043e-003, -7.466348e-002, -1.395809e-002, -1.745185e-002, 1.097408e-003, 4.305227e-002, -1.949296e-002, 5.970598e-003, 5.212586e-003, -2.494687e-002, -2.190069e-003, -7.481023e-003, -3.310680e-003, -1.355638e-003, 6.285014e-003, 1.544262e-003, -4.540188e-002, 5.507642e-003, 4.274366e-002, -1.343077e-002, 2.615248e-002, 1.395204e-002, 1.152921e-002, -8.999407e-003, 2.332758e-002, -5.227463e-002, 2.230778e-002, -4.208846e-002, -3.147589e-002, 2.478238e-002, 1.402880e-002, -2.565129e-003, 2.685386e-002, 1.066060e-003, -5.451420e-003, -1.377912e-002, -8.213386e-004, 2.105156e-002, 8.915903e-003, 7.683730e-003, -3.618935e-002, 5.493605e-002, 4.874799e-002, -4.386411e-002, 6.237307e-003, 8.885930e-004, -9.728727e-003, -3.431753e-003, -

© ISO/IEC 2004 — All rights reserved


Copyright International Organization for Standardization
Provided by IHS under license with ISO
No reproduction or networking permitted without license from IHS
Not for Resale

2.584502e-002, -1.967303e-002, -4.755047e-002, 4.554892e-002, 9.610193e-003, -2.213547e-002, 6.863144e-003, 1.601035e-002, 8.387044e-003, -2.199988e-002, -3.274966e-003, -3.807956e-003, -1.119381e-002, 1.308996e-002, -2.810756e-003, 1.754246e-002, 7.636994e-003, 9.506989e-003, 3.394191e-002, -3.724544e-002, 2.202888e-002, 3.649737e-003, 9.223751e-002, -6.042827e-002, -3.413301e-002, 3.333042e-002, 2.290368e-003, -3.695267e-002, -1.781579e-003, 1.520943e-002, 2.316288e-002, -1.219470e-002, -2.273788e-003, -1.117983e-002, 5.706290e-003, 8.840777e-004, -1.784814e-003, 2.075119e-002, -1.395443e-003, 3.563793e-002, 8.843350e-003, -2.794909e-002, 1.116625e-002, -4.090183e-003, -4.953510e-002, -3.800184e-002, -3.687698e-002, 6.219731e-002, -6.015485e-002, 3.958248e-003, 6.596617e-003, 9.813249e-004, 6.823565e-003, 6.069071e-003, 8.582834e-003, -6.723330e-003, 4.417765e-003, -3.399182e-003, 6.608020e-004, 1.278918e-002, 1.155431e-002, 4.337177e-003, 1.098689e-002, 1.479461e-002, -1.290062e-002, -6.647036e-002, 4.741151e-002, 2.286428e-002},

{-2.926705e-003, 1.964184e-002, -5.481493e-002, 1.804359e-002, -3.763802e-002, -6.160730e-002, 2.832577e-002, -4.940417e-002, 7.009671e-003, -1.321921e-002, 2.127290e-002, -4.396323e-003, -4.396323e-003, 2.127290e-002, -1.321921e-002, 7.009671e-003, -4.940417e-002, 2.832577e-002, -6.160730e-002, -3.763802e-002, 1.804359e-002, -5.481493e-002, 1.964184e-002, 2.031432e-003, -1.396553e-002, 4.376468e-002, 1.275168e-002, 2.722827e-002, -9.984824e-003, -6.689688e-003, -1.303988e-002, 7.743330e-003, 1.131572e-002, -7.783500e-003, 1.068877e-002, 1.127969e-002, 1.344885e-002, 3.026544e-002, -4.920636e-002, 3.285064e-002, -1.515560e-002, -3.781361e-002, 2.006270e-002, -1.387698e-001, 4.853199e-002, -4.812929e-002, 4.212365e-003, -2.642520e-003, -4.041252e-003, -1.072928e-001, 1.944047e-001, 3.849968e-002, -6.708105e-002, 2.179921e-002, 9.529100e-002, 6.586553e-002, -2.126435e-002, -2.176385e-002, 2.250950e-002, 1.793283e-002, -1.021329e-002, 1.538291e-002, -4.495680e-002, -7.999701e-002, -5.004731e-002, -6.087068e-003, -1.956134e-002, -6.022807e-002, 4.768539e-002, 5.560260e-002, 6.057146e-002, 6.100984e-002, -5.165649e-002, 6.259751e-002, -2.617133e-002, -8.537800e-003, 2.398342e-003, 2.416111e-003, -1.795379e-002, 6.558810e-002, 4.911445e-002, 2.441389e-002, 9.384628e-003, -2.425235e-002, -5.154333e-002, -2.881211e-002, 4.813915e-002, -2.164494e-002, -8.422889e-002, 8.609620e-002, -1.074388e-002, -1.316676e-002, -4.887565e-003, 7.957278e-002, -1.098903e-001, 2.991962e-002, -9.140658e-002, -1.702198e-002, 3.149916e-002, 1.442736e-002, -4.557160e-002, 2.721437e-002, 2.504275e-003, -1.018307e-002, -4.366065e-002, 4.653082e-003, 4.801493e-002, 5.526953e-002, 3.522240e-002, 2.284920e-002, 5.487759e-002, 3.656256e-002, -4.051191e-003, -7.208609e-003, 4.439446e-003, -7.424777e-002, -1.710736e-001, 5.031302e-002, 5.389006e-002, -3.491872e-002, -2.027893e-002, -2.388547e-002, -1.222772e-002, 2.628285e-002, 3.103099e-002, 2.253149e-002, -1.766320e-002, 9.320244e-003, -8.468566e-003, -2.881030e-002, -2.301824e-002, -1.388547e-002, -4.016799e-003, -3.707604e-002, -1.473957e-002, 3.278942e-002, 9.334529e-002, 2.124809e-002, 1.799327e-002, -4.617281e-002, -7.976779e-002, -5.666137e-002, -2.956382e-002, 1.895285e-002, 2.992672e-002, -1.334369e-002, -8.376205e-004, 1.973643e-002, -1.790486e-002, 1.293570e-003, 1.109633e-003, -1.193261e-002, -4.419759e-002, -2.740866e-002, 1.934927e-002, 4.538535e-002, 7.161288e-002, 3.950854e-002, -1.149217e-002, 1.999170e-003, 6.815693e-002, 4.076221e-002, -7.993540e-003, 6.852991e-002, -1.144220e-002, 5.592801e-002, 6.379953e-002, -3.248349e-002, 2.732684e-002, 2.341196e-002, 7.671704e-003, 7.401441e-003, -1.709877e-003, 1.232472e-003, 1.847350e-002, -8.130655e-003, -1.912579e-002, 1.660911e-002, 5.894740e-003, -5.129308e-002, -2.236201e-002, -8.679677e-002, 1.270591e-002, 7.665417e-002, -5.484299e-002, 3.142288e-003, -8.022439e-002, 2.676785e-002, 5.143629e-002, 1.029795e-002, 6.304623e-002, -1.013604e-002, 3.205671e-002, -1.158674e-002, -2.720128e-002, -1.782614e-002, -2.069465e-002, -7.322839e-003, 4.030451e-003, 9.685958e-004, -3.059776e-002, 3.120685e-002, 2.613554e-002, 4.339307e-002, 4.602847e-002, -2.451076e-002, 2.707487e-002, 5.171114e-002, 3.466568e-002, -2.352430e-002, -8.790772e-003, 4.065232e-002, -1.816797e-002, -5.642087e-003, 4.548647e-002, -1.380519e-002, 7.308869e-004, -1.842226e-002, -2.374890e-002, -1.089731e-002, -6.972636e-004, 1.224668e-002, -1.896422e-002, -5.714011e-004, -1.241278e-003, -5.993506e-003, 5.275802e-002, 1.277998e-003, 2.873052e-002, -5.622052e-002, -6.259613e-002, -2.196999e-002, 8.507978e-002, 4.765477e-004, -3.579307e-002, 3.484252e-002, -1.294406e-002, -8.150152e-003, 4.309506e-002, -1.058955e-002, -5.550626e-003, 1.130352e-003, -1.654767e-002, -6.604529e-003, 9.713202e-003, 2.021124e-002, -4.124338e-003, -6.537363e-004, 2.539130e-002, -1.038368e-002, 4.329372e-003, 2.835847e-002, 7.515183e-003, 6.793859e-002, -3.402649e-002, -1.549443e-002, 1.450645e-002, 8.918699e-003, -2.869035e-002, 6.991137e-003, -4.595305e-003, 2.347232e-002, 5.556575e-003, -1.285760e-002, -2.313540e-003, 1.528491e-003, -2.553240e-002, -1.033096e-002, 2.685506e-002, 1.357363e-002, -8.458888e-003, -3.200392e-002, 3.612163e-002, 1.515268e-002, -1.971539e-002, -3.267404e-002, -7.200910e-002, 5.171813e-002, -5.061824e-003, 5.677243e-003, 2.671721e-002, -1.694733e-002, -2.879673e-002, 2.094806e-002, 5.386792e-003, -9.059866e-004, 6.844292e-003, -3.614095e-004, 1.541660e-003, -2.554160e-003, 4.525569e-004, -7.516115e-004, 2.114200e-002, 1.047998e-003, -2.207031e-002, -2.527742e-004, 3.958098e-003, 2.580742e-002, 1.027169e-002, -5.013588e-003, -2.601339e-002, 3.463294e-002, 1.448181e-002, -1.381301e-002, 1.594114e-002, -2.359407e-002, -9.156320e-003, 1.723098e-002, -1.077242e-002, -7.146565e-003, -3.910117e-004, -1.239142e-003,


© ISO/IEC 2004 — All rights reserved

--`,,```,,,,````-`-`,,`,,`,`,,`---
Copyright International Organization for Standardization
Provided by IHS under license with ISO
No reproduction or networking permitted without license from IHS
Not for Resale

6.941040e-004, -1.236109e-002, 1.161800e-002, -3.855337e-003, -4.467722e-003, -2.832197e-003, -1.451410e-004, 3.126999e-002, -2.199765e-002, 2.339099e-002, -7.679984e-017, -1.358021e-003, -2.186964e-002, 4.311676e-004, 4.401911e-003, 3.020981e-003, 2.896753e-002, -1.188783e-002, 3.890877e-003, -1.977874e-002, 3.541397e-002, -2.644096e-002, 2.644096e-002, -3.541397e-002, 1.977874e-002, -3.890877e-003, 1.188783e-002, -2.896753e-002, -3.020981e-003, -4.401911e-003, -4.311676e-004, 2.186964e-002, 1.358021e-003, 2.908373e-002, 1.051269e-003, -9.328843e-003, -6.211585e-002, 1.378443e-001, -1.006415e-001, -1.551284e-002, 2.462426e-002, -7.338126e-002, -5.589036e-003, -1.436956e-002, 2.828143e-002, 5.027762e-002, 4.042409e-002, -9.430821e-003, 9.174191e-003, 4.231110e-002, -3.345433e-003, -3.578142e-002, -2.854003e-002, 9.515285e-003, -3.278596e-002, 1.341448e-002, -4.933311e-002, -5.327061e-002, 6.322599e-002, -6.853209e-002, 7.379485e-003, 6.126776e-002, 6.153882e-002, -2.717362e-002, -3.683502e-003, -4.822530e-002, -2.871108e-003, -5.656356e-003, -5.482497e-002, -6.407409e-003, -9.978685e-003, -2.446191e-002, -2.035516e-002, 6.771950e-002, 2.158452e-002, -8.997484e-002, 2.277343e-003, -7.611291e-003, 7.898064e-002, 6.954393e-002, 8.412899e-002, -1.071310e-001, 6.854052e-002, -6.075006e-002, 2.957850e-002, 3.126188e-002, 3.623563e-002, -2.723155e-002, -1.318212e-002, -6.142186e-002, -2.486575e-002, -1.759668e-002, -1.658050e-002, 3.693476e-002, -1.881573e-002, 9.509129e-003, 4.615422e-002, -1.076728e-002, 6.889618e-002, 5.027215e-002, 1.283046e-001, -2.793339e-002, -1.392029e-001, -1.515815e-001, -6.573389e-002, 1.423421e-001, -1.717816e-001, 3.552690e-002, -7.784801e-002, -3.618003e-002, 2.326686e-002, -1.098964e-002, 8.797580e-003, -1.193348e-002, 1.882914e-002, 4.137172e-003, -6.745682e-003, 2.703396e-002, -2.183009e-002, 2.220255e-002, 8.347505e-002, -9.069744e-002, 2.561084e-002, 1.867643e-002, -1.232952e-002, 7.611188e-002, -9.874712e-003, -1.149582e-002, -1.108304e-002, 1.539192e-002, -6.045469e-003, 4.256559e-002, -1.156841e-002, -7.891473e-003, 1.613457e-002, 6.050047e-003, 1.127994e-002, -1.627800e-002, -4.641921e-002, -3.276167e-003, -9.797408e-003, -4.161936e-002, -4.038432e-002, -4.778922e-002, -4.942301e-002, 9.384232e-002, -1.626114e-001, -1.061488e-001, -6.764551e-002, 3.481076e-003, 4.312359e-002, -8.286337e-002, -2.759873e-002, 3.237378e-002, -6.035974e-002, 1.001920e-002, -4.962998e-004, 5.334663e-003, 8.425161e-004, -4.247088e-003, 1.122867e-002, 9.309640e-003, -2.208756e-002, -7.004111e-003, 9.087339e-003, -3.096921e-002, 5.867710e-002, -5.283919e-002, 2.998332e-002, -3.996562e-002, 7.087643e-002, -8.520389e-002, 4.990220e-002, -9.292899e-002, 6.884698e-002, 3.181001e-003, -6.062855e-002, -4.212665e-003, 1.716720e-002, -6.003548e-004, -4.070494e-002, -7.638762e-003, 3.371118e-003, 2.743599e-002, 4.922125e-003, -2.487219e-002, -5.415420e-002, -3.923030e-002, 1.709304e-002, 1.033453e-002, -2.780858e-003, -3.297279e-002, -5.219985e-002, 2.666283e-002, 1.406434e-001, -1.366982e-002, -7.382797e-002, 5.676894e-003, -1.954497e-002, 5.181928e-003, 3.162798e-002, 6.470393e-003, -3.401610e-002, -2.410238e-002, 6.958174e-003, 1.335334e-002, -9.184455e-003, 8.535153e-003, -6.710998e-003, 2.334844e-003, 2.550378e-002, -9.399139e-003, 2.803563e-002, -4.904631e-002, -6.194966e-002, -3.303508e-003, -3.508196e-002, -1.606549e-002, -7.761820e-002, 4.941201e-002, -3.002233e-002, 4.678349e-003, 5.123222e-002, 1.140599e-002, -1.956911e-002, -2.981417e-002, -6.957131e-003, -2.939179e-003, -7.144656e-003, 6.065101e-003, -9.243596e-003, -1.754758e-002, -1.003019e-002, -2.322406e-002, 8.549292e-003, 4.147764e-003, -2.926922e-002, 1.346294e-003, 4.257301e-002, -2.753894e-003, -2.285572e-003, -5.432119e-003, -2.053064e-002, -8.463562e-003, -1.924465e-002, 3.057021e-002, 1.843288e-002, 3.770475e-003, 5.928262e-003, -1.399225e-002, -8.108157e-003, -1.249960e-002, 7.483075e-003, -1.591791e-002, -8.736615e-003, -2.153127e-002, -1.886925e-003, 1.715776e-002, -1.399366e-002, 3.174568e-002, -7.041316e-003, -7.038278e-002, 3.522727e-002, 3.214317e-002, 4.603255e-002, -3.709122e-002, -2.507852e-002, 2.184383e-002, -1.069678e-002, 7.066268e-003, 2.715334e-002, -3.863591e-004, -1.791089e-002, -1.095125e-002, 1.107921e-002, 1.130622e-002, 1.128505e-002, -3.776798e-002, -2.562467e-002, 2.311248e-002, 1.091975e-002, 1.871082e-002, -2.709380e-002, -2.044850e-003, -1.780166e-002, -2.167336e-002, 1.360886e-002, -3.786364e-002, 3.810246e-002, -3.411160e-002, -2.785312e-002, 6.464241e-003, 1.562265e-002, 4.576056e-003, -5.859664e-004, -7.884242e-003, -2.204643e-003, 1.650410e-002, 2.141324e-003, -4.654731e-003, 3.985013e-003, -1.972140e-002, -2.339533e-002, 3.338653e-002, 1.042074e-002, -2.109762e-002, -1.646907e-002, 1.888508e-002, -1.714542e-002, 7.043522e-003, 2.383001e-002, -4.560263e-002, 1.969558e-002, -2.240741e-002, -9.796517e-003, -1.633887e-005, 2.710665e-003, -1.110438e-002, -4.791722e-003, 1.436832e-002, 8.253235e-003, 3.979354e-003, 1.515905e-002, -9.988021e-003, -6.370553e-003, -6.047431e-003, 6.420920e-003, 2.634643e-003, -7.683795e-004, 6.981966e-003, -6.070917e-002, 4.050558e-002},

{2.638845e-003, -9.460688e-003, 1.881600e-002, -7.369823e-003, 2.592061e-002, -3.077059e-002, -3.894072e-002, 5.664431e-002, -2.756274e-002, -2.030356e-002, 1.039353e-002, 4.108108e-002, 4.108108e-002, 1.039353e-002, -2.030356e-002, -2.756274e-002, 5.664431e-002, -3.894072e-002, -3.077059e-002, 2.592061e-002, -7.369823e-003, 1.881600e-002, -9.460688e-003, -1.410791e-003, 6.305169e-002, -1.325067e-001, 9.057574e-002, -4.192770e-002, -2.603671e-002, 5.382730e-002, -5.704883e-002, -3.826315e-002, -5.576815e-002, -6.593074e-003, -1.216165e-004, 4.505321e-003, 3.166776e-002, 5.628202e-004, 7.380419e-003, 1.691618e-002, -1.571479e-002, 1.145121e-002, -5.579288e-003, 1.543268e-004, 7.335238e-003, 1.080719e-002, 5.361071e-003, -2.897280e-002,

© ISO/IEC 2004 — All rights reserved


Copyright International Organization for Standardization
Provided by IHS under license with ISO
No reproduction or networking permitted without license from IHS
Not for Resale

1.117083e-001, 7.861252e-002, -8.852555e-002, 6.116501e-002, -9.235661e-002, -1.342611e-002, 5.595353e-003, 4.434015e-002, -8.807430e-003, -1.964302e-004, -3.055189e-002, -1.100949e-002, 2.147591e-002, 6.369929e-002, -1.935368e-002, -6.550995e-002, 7.453139e-002, -1.438272e-001, 1.543098e-001, 3.403244e-002, 3.416330e-002, 5.503153e-003, 1.184218e-001, -8.384312e-002, -4.444474e-002, 5.517244e-002, -3.161575e-002, 7.825483e-003, 1.596286e-002, 4.176627e-002, -4.587691e-004, 2.125944e-002, -2.416257e-003, 2.747872e-002, -2.282413e-002, -5.136529e-004, 3.236866e-002, 3.301464e-002, 5.394731e-002, 1.813105e-002, -2.560646e-002, 7.796749e-002, 1.402143e-002, -2.755206e-002, 4.191062e-002, -1.037884e-002, -4.512299e-002, -8.158635e-002, 1.468668e-001, 3.908782e-002, 1.286445e-002, 3.841507e-004, -3.148982e-002, -5.876533e-003, 1.825254e-002, 5.007500e-002, -9.966219e-003, 5.085540e-002, -6.436911e-003, -3.057458e-002, -2.992351e-002, -4.578286e-002, 2.960587e-002, 7.554650e-002, -5.623296e-002, -8.109997e-002, 2.746464e-002, 9.005682e-003, -6.839941e-002, 2.241714e-001, 1.273013e-002, -5.366008e-002, -2.174458e-002, -5.319960e-002, 3.726657e-003, 9.831667e-003, -4.367126e-003, 6.927383e-003, -2.341096e-002, -3.530885e-002, -1.612205e-002, 2.426849e-002, 2.966731e-003, 2.021258e-002, 7.279856e-003, -4.364403e-002, -3.988059e-002, 9.687606e-002, 9.356176e-002, -9.186389e-002, -2.769392e-003, -1.341916e-003, 2.823767e-002, -4.254109e-002, 7.972545e-002, -4.835571e-002, 9.616672e-002, 6.704420e-002, -3.127506e-002, -7.082952e-002, -3.803739e-002, 6.054657e-003, -1.162491e-003, 2.824762e-002, 2.350489e-003, -3.892364e-002, 2.378645e-003, 4.239155e-002, 1.636392e-002, 8.532957e-003, -4.311394e-002, -1.073159e-001, 1.104269e-001, -3.486468e-002, 2.057729e-002, 9.110889e-002, -8.046916e-003, -3.450251e-002, 1.184827e-002, -9.866227e-004, -2.171997e-002, -5.429396e-002, -2.510627e-002, 4.008119e-004, -2.923103e-003, -3.644727e-002, -1.346246e-002, 3.766478e-002, 2.169990e-002, -1.106895e-002, 2.294702e-002, 6.364793e-002, 5.023510e-002, 3.650954e-002, -6.669130e-002, -3.132703e-003, -6.702832e-002, 2.411764e-002, -1.093964e-001, 4.523448e-002, 1.362075e-002, -1.299556e-003, 2.385764e-002, -1.204373e-002, 1.622216e-002, 1.370027e-002, -3.346113e-002, -1.978867e-002, -7.810941e-003, -2.196790e-002, 1.335214e-002, 2.638342e-002, 8.652084e-003, -2.354261e-002, -5.726680e-002, 2.274040e-002, 7.174254e-002, -2.667781e-002, -5.780098e-003, 5.189359e-002, -3.568748e-002, -6.947199e-003, 2.563312e-002, 1.596105e-002, -9.119217e-003, -1.389718e-002, 2.488420e-004, -7.164108e-003, -2.028280e-002, -2.095509e-002, -1.548940e-002, 9.421876e-003, 1.720444e-002, -9.869588e-003, 6.266220e-003, -9.019100e-003, 1.743577e-003, 1.431753e-003, -4.142265e-002, 2.831061e-002, 2.397520e-002, -1.494720e-003, -6.792104e-003, -3.638537e-002, 2.926403e-002, 3.495543e-002, -4.407041e-002, 2.924232e-002, -3.433963e-003, -1.049284e-002, 5.199571e-003, -1.759084e-003, -8.330406e-003, -2.697597e-003, 1.303263e-002, -2.972380e-003, 1.725606e-002, 6.572807e-003, -3.827110e-003, -1.645793e-002, 1.016306e-002, -1.480518e-002, 2.240175e-002, 4.482742e-002, -8.114764e-003, -1.127268e-002, 2.089052e-002, -1.425923e-002, -1.679712e-002, 1.990954e-002, 6.796744e-003, 2.168834e-002, 2.691613e-003, 1.651851e-002, -1.600349e-002, -1.375285e-002, 1.839129e-003, 8.487705e-003, 2.233886e-002, -1.366617e-002, -3.970905e-003, -2.394140e-002, -1.095454e-003, -2.398962e-003, -1.847073e-003, 1.995529e-003, 3.667787e-002, 9.016513e-003, -3.458021e-002, 1.032178e-002, 5.497553e-002, -3.198280e-003, -1.405618e-002, 5.847523e-003, 1.628230e-002, 2.919723e-002, -1.226745e-002, -7.685174e-003, -2.340268e-003, 2.821872e-003, 9.769059e-003, 1.073850e-002, 1.770414e-002, -2.367679e-002, -9.085784e-003, -4.319447e-003, 1.425142e-002, 2.955254e-003, -6.711665e-003, 2.657005e-002, 2.739354e-002, -2.155206e-002, 1.019952e-002, 3.029699e-003, 2.175485e-002, -2.957540e-002, 2.867596e-002, 1.307773e-002, 8.321358e-003, 1.438244e-002, -8.324264e-003, 1.115906e-002, -2.301900e-003, -6.690241e-003, 1.474014e-002, -8.170943e-004, 1.073972e-002, -1.410581e-002, -6.913584e-003, 8.215051e-003, -1.237635e-002, 3.420543e-002, -3.003736e-002, 3.800703e-002, 3.320720e-017, 9.548750e-003, -5.627483e-005, -1.003559e-002, 6.822212e-003, -1.039124e-002, -3.003316e-002, 3.597517e-002, -1.577430e-002, 2.548595e-003, 4.765098e-002, -6.006871e-003, 6.006871e-003, -4.765098e-002, -2.548595e-003, 1.577430e-002, -3.597517e-002, 3.003316e-002, 1.039124e-002, -6.822212e-003, 1.003559e-002, 5.627483e-005, -9.548750e-003, 2.024428e-002, -6.670980e-002, 3.484699e-002, -2.437917e-002, 5.010879e-002, 1.607765e-002, -8.241154e-003, -6.092325e-002, 8.387363e-003, 4.404032e-002, 2.310135e-002, -4.562712e-003, -1.662321e-002, 1.080278e-002, -2.576101e-002, -6.077288e-003, 6.118391e-002, -1.451748e-003, -1.072051e-002, 4.290749e-002, -3.269231e-002, -2.874008e-002, 3.689773e-002, 1.642756e-002, 1.083927e-001, 6.959690e-003, -5.321760e-002, 1.203101e-001, 4.627836e-002, -6.538347e-003, 1.893951e-002, 4.445886e-002, 2.296824e-003, -3.948796e-002, -2.861253e-003, 1.020476e-002, 3.313404e-004, 9.559459e-003, 4.321912e-002, 2.094929e-002, -7.147966e-003, 2.649294e-002, 2.778807e-002, 8.531920e-002, 1.801375e-002, -2.490961e-006, -9.294781e-002, -8.554879e-002, 3.837457e-002, -4.822989e-002, -5.216231e-002, 5.408026e-002, 2.240576e-002, 5.341729e-002, 5.854439e-002, 4.255110e-002, 6.368655e-002, 3.830672e-002, 1.221627e-002, -3.068792e-002, -4.486584e-002, 1.886382e-002, 3.429685e-002, 5.955054e-002, 3.367444e-002, 2.261705e-002, -1.021370e-001, -3.299797e-002, -6.194778e-002, 1.434469e-002, 8.841158e-002, 2.750398e-002, 9.614203e-002, -3.811253e-002, -2.419236e-002, -4.883935e-002, -3.891988e-002, 1.290505e-002, 3.490215e-002, -2.114407e-002, -3.457911e-002, -3.976113e-003, -2.554662e-002, -5.187639e-002, -3.691412e-002, -3.271751e-003, 2.060278e-002, -


--`,,```,,,,````-`-`,,`,,`,`,,`---
© ISO/IEC 2004 — All rights reserved

Copyright International Organization for Standardization
Provided by IHS under license with ISO
No reproduction or networking permitted without license from IHS
Not for Resale

3.310523e-002, -3.824779e-002, 4.880328e-002, -1.005571e-001, 1.827165e-002, -3.113144e-002, -1.297272e-001, -1.246017e-001, 5.926274e-002, 7.971109e-004, 2.624256e-002, -7.409310e-002, -2.379892e-002, -1.849058e-003, -2.166773e-002, -4.068539e-003, -3.122852e-003, 3.364381e-002, 1.347629e-002, -2.546998e-002, -1.730983e-002, -8.005456e-004, 3.809932e-002, 4.762952e-002, 1.625683e-002, 1.046611e-001, -3.019725e-002, 1.039562e-001, 8.095867e-002, 3.850344e-003, 4.785544e-002, -5.842552e-002, -1.896239e-002, 9.156264e-003, -9.626832e-003, -3.022429e-002, -3.239930e-003, -8.997487e-003, 8.802454e-004, 1.580571e-002, -8.792891e-003, 6.233230e-003, -2.505913e-003, -4.241208e-002, -5.284524e-002, -4.232069e-002, -9.193373e-003, -4.719842e-002, -9.581804e-002, 1.280630e-001, 5.628767e-002, -8.560329e-002, 7.216227e-002, -2.183951e-002, -3.996955e-002, 1.708787e-003, 2.395652e-002, -3.315554e-002, 1.426006e-002, -2.324424e-002, -1.546692e-002, -9.463852e-003, -1.070121e-002, -1.550259e-002, -1.340326e-002, -4.552682e-002, 4.582412e-003, 2.494903e-002, 3.672614e-002, 2.040635e-002, -8.093419e-003, -4.857286e-003, -1.854903e-002, -9.504506e-002, 7.924711e-002, -2.393638e-002, -8.973259e-002, -1.513461e-002, 2.773863e-002, -4.001292e-002, -3.946434e-003, 1.904846e-002, 1.309981e-002, -4.115605e-002, -8.073508e-003, 1.927242e-002, 3.454898e-002, 7.364148e-003, -1.502061e-002, -7.280222e-002, 1.457975e-002, 4.214266e-002, 2.386896e-002, 2.529848e-002, -9.436178e-002, 8.603439e-003, -7.903179e-002, -1.799430e-002, -3.046941e-002, 1.546060e-002, 2.218422e-002, -2.073389e-002, -3.585146e-003, -1.254405e-002, -7.504100e-003, -3.873541e-002, -1.658802e-002, -4.182196e-003, 2.440211e-003, -2.386959e-002, 4.065171e-002, 1.571227e-002, 9.037173e-003, -3.193378e-002, 9.670119e-003, 4.409332e-002, -6.298232e-003, -1.729919e-002, -4.732300e-002, 8.610110e-003, -5.375033e-002, 3.665716e-003, -8.571040e-002, -7.772564e-003, 4.832359e-002, -1.756046e-002, -1.092836e-002, 7.010915e-003, -1.024624e-002, -2.542764e-002, -6.539566e-003, -8.339041e-003, 1.592245e-002, 4.146525e-003, 2.343538e-002, -1.700743e-003, -3.774968e-003, -1.544298e-002, -1.725414e-002, 4.072290e-002, 3.077451e-003, -5.091550e-002, 5.051839e-002, -4.057805e-002, 1.217727e-002, -2.659110e-002, -8.334732e-003, 2.760991e-002, -1.680482e-002, -5.666371e-003, -3.438570e-003, -2.229879e-002, -1.299343e-002, 3.571116e-003, 3.183508e-003, -1.528944e-002, 2.104153e-002, 2.367892e-002, 6.180563e-003, 2.132207e-003, -7.823370e-003, 1.060097e-002, 6.532719e-003, -1.247628e-002, -2.235026e-002, 2.916265e-002, 7.899697e-003, -6.842535e-002, -4.562950e-003, 2.275839e-002, -7.271187e-003, 1.348728e-002, 2.132782e-002, -2.823988e-002, -2.211256e-002, -1.103196e-002, -5.681850e-003, 6.345595e-003, -5.653037e-003, -2.440707e-003, 1.051123e-002, 2.279291e-002, -2.805509e-002, 4.699276e-003, -2.991115e-003, 7.507747e-003, 3.346819e-002, -2.488456e-002, -3.260526e-003, -4.022575e-002, 4.776821e-002, -5.311680e-002, -1.379814e-002, 1.917704e-002, 2.127507e-002, -1.108654e-003, 2.132916e-004, -8.139993e-003, -1.099061e-002, -4.603154e-003, -2.510094e-003, -2.272298e-003, -3.403519e-003, 7.175968e-003, -2.447225e-003, 1.761136e-003, -1.312462e-002, 6.560786e-003, 1.616831e-002, -3.505802e-003, -2.114696e-002, 3.725028e-002},

{4.399068e-003, -1.793642e-002, 2.400776e-002, -1.736239e-002, 2.003078e-002, 3.061155e-003, 2.492449e-003, 1.466907e-003, 3.713233e-002, -8.941407e-003, -2.449564e-002, 2.518727e-002, 2.518727e-002, -2.449564e-002, -8.941407e-003, 3.713233e-002, 1.466907e-003, 2.492449e-003, 3.061155e-003, 2.003078e-002, -1.736239e-002, 2.400776e-002, -1.793642e-002, 9.726794e-003, -5.281522e-002, -4.573902e-002, 1.196432e-002, 1.094532e-002, -1.513614e-003, 2.966553e-002, -5.064328e-002, -2.307720e-002, -2.549828e-002, -7.022986e-002, -6.952057e-002, 7.187414e-004, 2.891553e-002, 3.885703e-002, -1.925482e-003, 1.864959e-002, 1.246692e-002, -9.807109e-002, 1.150612e-001, -1.311957e-002, -8.189318e-002, 5.459133e-002, -1.568802e-002, 7.220400e-002, -8.919562e-004, -6.750687e-002, 8.799064e-002, 8.804825e-003, 3.241330e-003, 5.737782e-002, -1.742353e-002, 2.812528e-002, 2.270945e-002, -2.820379e-003, -3.013563e-002, -4.030625e-002, -4.167124e-002, -8.689152e-002, -4.269061e-002, -1.668936e-002, -4.261207e-002, 1.101465e-002, -7.135140e-002, -9.752908e-002, -1.484382e-001, 5.127188e-003, 2.191355e-002, 1.238391e-002, 3.242082e-003, 3.566806e-002, 1.946774e-002, 5.106784e-003, -5.659203e-002, -6.820981e-003, -1.537262e-002, 8.555549e-003, 4.383231e-002, 1.149520e-002, -2.060253e-002, -3.462878e-002, -2.270215e-002, -1.816609e-002, 4.686848e-002, -1.137322e-003, 4.902751e-002, -1.087490e-002, -5.056350e-002, 2.413129e-002, 4.738699e-003, -2.367585e-002, 1.638824e-002, 2.779528e-002, -1.173614e-001, 2.249316e-003, -9.017339e-003, 1.255089e-002, 1.301579e-002, 5.894354e-002, 2.816254e-002, -7.859514e-003, 1.585220e-002, -2.978856e-002, 3.269549e-003, 3.556730e-002, -9.806513e-003, 5.792936e-002, 2.460963e-002, -4.887112e-002, 4.658769e-002, 6.223247e-002, 2.062013e-002, 9.928585e-002, -3.927957e-002, 5.856202e-002, -7.190417e-002, 4.761602e-002, 8.773497e-002, -2.365088e-002, 7.080592e-003, 3.832777e-002, 2.564268e-002, 1.919926e-002, 2.010580e-002, 4.554924e-003, 6.743380e-003, -1.471337e-002, -7.871544e-003, -4.249899e-002, -6.648142e-002, 9.451213e-002, -6.751666e-002, -4.149683e-003, 1.920080e-002, 3.824442e-002, 2.120187e-001, -5.579974e-002, -9.767921e-002, 9.017407e-003, 5.701497e-002, -9.185731e-002, -1.241347e-002, 2.253919e-002, -4.286720e-003, -4.891564e-003, 1.029903e-002, -1.752443e-002, -1.737337e-003, 8.380086e-003, -9.525571e-003, 2.048398e-002, 1.472220e-002, -1.488949e-003, -7.128674e-002, 2.369776e-002, 1.015925e-001, -9.693655e-002, 4.498867e-002, -1.178843e-002, 5.651286e-002, -2.606046e-002, -4.374796e-002, 9.279769e-004, 4.055189e-002, 7.727297e-003, -

© ISO/IEC 2004 — All rights reserved


Copyright International Organization for Standardization
Provided by IHS under license with ISO
No reproduction or networking permitted without license from IHS
Not for Resale

3.519979e-002, -1.038664e-002, 3.632556e-002, 3.580323e-002, 3.004882e-002, 6.132087e-003, 9.789088e-003, 5.502865e-003, -3.943978e-002, 1.262010e-002, 1.122330e-002, 5.583417e-002, -5.037191e-002, -9.493614e-002, 5.765611e-002, -1.763257e-002, -2.543021e-002, 8.084528e-003, -3.920369e-002, 5.121562e-002, -2.942772e-002, -4.258460e-002, 4.492989e-003, -7.125644e-003, 3.730581e-002, -7.156664e-004, -1.380252e-002, -5.681090e-003, -2.737583e-002, -3.081230e-003, -2.998923e-002, 2.992069e-002, 1.570291e-004, -1.292647e-002, 2.449516e-002, -1.008839e-002, 4.086762e-002, -2.147782e-002, 4.238399e-002, -9.099389e-002, 6.806241e-002, 5.406815e-002, -5.263597e-002, -3.517718e-002, -1.624536e-002, 3.568115e-002, 2.846023e-002, -2.713456e-002, 7.823828e-003, 1.948979e-002, 9.964568e-003, 5.372010e-003, -1.738060e-002, 8.310243e-003, -4.143190e-002, 1.336105e-002, 4.018918e-002, -1.937743e-002, 3.390965e-002, -5.658213e-002, -1.839682e-002, 7.810152e-002, 6.892407e-002, -1.087366e-002, 3.740834e-002, 8.624493e-003, -4.117521e-002, 8.161848e-002, -1.758435e-002, -3.653522e-002, 3.039673e-002, 1.146021e-002, 1.021913e-002, -7.348051e-003, -1.529593e-002, 8.497278e-003, -1.406187e-002, 1.898622e-002, 1.394611e-002, -3.305589e-002, 7.972977e-002, -6.831174e-002, -5.828516e-003, 2.045355e-002, -9.852485e-002, -3.079072e-002, 3.565850e-002, 6.334666e-003, -3.651147e-002, 5.641287e-002, -1.820446e-002, -2.652566e-003, 1.387250e-002, 1.362990e-002, 1.803003e-002, -8.548045e-003, -4.465798e-003, 5.016593e-003, -1.506326e-002, -1.665991e-003, -1.541352e-004, 3.797778e-004, 3.737045e-003, -4.455952e-002, 4.963451e-002, -3.997368e-002, 4.967124e-003, 4.363757e-002, -5.301148e-002, 5.897831e-002, 1.734763e-002, -8.787158e-003, -1.962777e-002, 4.975701e-003, 1.313246e-002, -1.446688e-003, 3.557069e-004, 4.494763e-003, 1.843687e-002, 8.255630e-003, -4.336350e-003, 7.122304e-003, 3.619164e-003, -1.088182e-002, 6.045574e-003, 3.749969e-003, -1.689641e-002, -9.895761e-003, -1.526340e-002, -4.465160e-003, 3.697038e-002, -3.653921e-002, 4.158650e-002, 8.152187e-003, -2.814417e-002, 1.934535e-002, 3.883441e-002, -4.101493e-002, -4.389488e-003, 2.066315e-002, 7.917113e-003, -1.714658e-003, -7.865415e-003, -1.671168e-003, 1.170643e-003, -2.252179e-003, 2.178754e-003, -8.692558e-003, -2.520988e-002, 2.237010e-002, -2.090770e-003, -1.416006e-002, 1.728593e-002, 1.787259e-002, -1.423474e-017, -8.162680e-003, 1.706743e-002, -5.766606e-003, -1.477413e-002, 1.595701e-002, 3.418287e-003, -9.540021e-003, 4.517293e-003, 2.694386e-002, -1.257029e-002, 4.566925e-002, -4.566925e-002, 1.257029e-002, -2.694386e-002, -4.517293e-003, 9.540021e-003, -3.418287e-003, -1.595701e-002, 1.477413e-002, 5.766606e-003, -1.706743e-002, 8.162680e-003, -8.502947e-003, -3.584284e-002, 7.794035e-002, -1.465244e-002, -8.290561e-002, 4.030526e-002, 3.069188e-002, -4.463207e-002, 4.527473e-002, -8.427974e-003, -5.603652e-003, -5.201641e-002, -4.313982e-002, -7.752510e-002, 1.797238e-002, 2.223807e-002, -2.249470e-002, -8.496994e-003, 7.570143e-002, -6.261945e-002, -5.555660e-002, 5.858358e-002, -2.238326e-002, 4.854743e-002, 3.415327e-002, 1.631534e-002, 3.543053e-003, -3.543178e-002, 6.128161e-002, -5.104743e-002, 3.838978e-002, -3.902322e-002, 1.065978e-002, -4.340402e-002, 4.980328e-003, -1.647903e-003, 1.301618e-002, -1.097830e-002, -2.385738e-002, -1.938774e-003, -3.104763e-002, -3.833262e-003, -2.531744e-002, 5.507132e-002, -5.934350e-002, 5.089015e-002, 5.102161e-002, -6.187491e-002, 8.363613e-005, 1.017928e-001, -7.295753e-002, -1.311279e-001, 6.753034e-002, 1.497430e-002, 3.181522e-002, 1.892235e-002, 1.534551e-002, -3.110086e-002, 2.421675e-002, 4.581798e-002, 3.699992e-002, -2.627945e-002, -5.310532e-003, 8.866216e-002, -7.634397e-002, 1.538721e-002, -6.256988e-003, 4.065784e-002, 6.644215e-002, 4.246881e-002, 3.979376e-003, -8.326723e-002, -4.138993e-002, -3.096320e-002, 2.556224e-002, -4.810703e-002, 4.312905e-003, 1.316270e-003, 2.604196e-002, -4.331537e-002, -4.232185e-002, -5.571906e-002, -5.922370e-002, 1.374459e-002, 4.805360e-003, -4.326228e-002, -5.122903e-002, 7.120248e-002, -4.581208e-003, -1.468318e-002, -3.085765e-002, 1.638680e-001, -1.087479e-001, -3.626249e-002, 4.355100e-002, 4.352644e-002, 9.213636e-002, -1.525782e-002, -2.531855e-003, 3.847538e-002, 2.323095e-002, -8.546832e-002, -8.295083e-002, -1.480020e-002, 1.801727e-002, -4.208316e-002, -5.444729e-002, 7.899106e-002, 5.510246e-002, 7.685166e-003, -8.448408e-002, 1.373506e-002, -7.607866e-004, -2.019165e-002, -5.923376e-002, -7.345909e-002, 3.839523e-002, -4.568511e-002, 8.789693e-003, -2.900733e-002, -5.624528e-002, 5.797066e-002, 1.882245e-002, -6.301906e-003, 3.439462e-002, 2.637730e-002, 2.421377e-002, 1.875914e-002, 1.175411e-003, -3.313262e-003, -4.189276e-002, -2.446081e-002, 4.018761e-002, 2.451753e-002, -9.821060e-003, 8.079646e-002, -3.374903e-002, 6.699802e-002, -4.717696e-002, 2.976963e-003, 1.278842e-002, 1.977647e-002, -2.547149e-002, 1.443323e-002, -3.331589e-002, 8.310856e-003, 2.508512e-002, 2.243309e-003, 9.061739e-003, -1.623198e-003, -1.045002e-002, 1.981218e-002, 5.954703e-003, 7.313569e-003, -1.280909e-002, -2.910606e-002, 3.214309e-002, -2.570858e-002, -3.422794e-002, 2.789255e-002, -1.786669e-002, -7.330180e-002, -8.962133e-003, 2.382501e-002, -9.191060e-002, 1.005335e-002, -7.056320e-003, 4.562051e-002, 1.189076e-002, -4.145101e-004, -6.309747e-003, -1.615907e-002, 5.353907e-003, 6.827756e-003, -1.863991e-002, -1.479883e-002, -1.803020e-002, 3.237297e-003, -4.619309e-003, -2.079830e-002, 1.198498e-001, -1.162175e-001, 5.597593e-002, 7.432824e-002, 8.760332e-002, -3.576942e-002, -3.837051e-002, -3.052854e-002, -2.851243e-002, 2.711832e-002, 3.844702e-002, -3.080188e-002, -2.024882e-002, 4.430595e-003, 6.750618e-003, -8.197303e-003, 1.588272e-002, 1.000807e-002, -5.067210e-003, -1.923565e-002, -2.852919e-002, 2.972133e-002, 1.056035e-002, -2.245541e-002, 4.697640e-002, 2.887276e-002, -8.082681e-002, -


© ISO/IEC 2004 — All rights reserved

Copyright International Organization for Standardization
Provided by IHS under license with ISO
No reproduction or networking permitted without license from IHS
Not for Resale

3.998384e-003, -1.337294e-002, -2.682955e-002, -2.198498e-002, 2.143758e-002, 1.941612e-002, -5.947115e-002, 1.544786e-002, 4.064130e-002, -1.437687e-002, -2.539049e-002, -1.812490e-002, -5.802659e-003, -1.129299e-002, -6.143944e-003, 2.825903e-003, 9.571876e-003, -2.841996e-002, 9.613146e-003, 2.501628e-002, 1.439805e-003, -2.232230e-002, 2.145072e-003, 2.395371e-002, -2.300559e-002, -2.954411e-002, 1.073687e-002, 2.216070e-002, -6.045510e-002, 5.263597e-002, 1.450818e-002, -2.436893e-002, -1.301385e-002, -4.907115e-003, 1.169307e-002, 1.286839e-002, 9.353638e-003, -3.057625e-003, -1.430735e-002, 2.025249e-003, 5.781777e-002, -4.204395e-002, 8.279083e-003, 5.256350e-002, -7.015520e-002, -1.389105e-002, 1.187385e-002, -1.575151e-002, 3.197035e-002, -4.152539e-002, 8.037983e-003, 3.703025e-002, -2.662965e-002, 4.633089e-003, 7.912230e-003, 3.084650e-003, -2.122779e-003, -1.465041e-002, -1.626646e-002, -1.734477e-004, 1.283769e-002, 3.054254e-003, 1.059462e-003, -2.531154e-002, 2.016145e-002, -3.183322e-003, -3.827423e-002, 4.647392e-002, -3.971100e-002, 7.464414e-002, -3.352517e-002, -6.309093e-002, 4.239892e-002, 1.274478e-002, -3.864649e-002, 1.022399e-002, 5.526970e-003, 7.050117e-003, 5.417902e-003, -2.701156e-003, 9.996974e-003, 4.356434e-003, -2.475702e-003, -6.913449e-003, 1.162303e-002, -7.074159e-003, 1.341131e-002, -2.456774e-002, -3.103875e-003, 5.407995e-002, -4.730011e-002, -2.929664e-002},
{2.558363e-003, -3.190263e-003, 1.387629e-002, -4.077015e-003, -3.555630e-002, 7.362847e-002, -7.108910e-002, -2.276498e-002, 3.272046e-002, 1.191900e-002, -2.368075e-002, 2.364652e-002, 2.364652e-002, -2.368075e-002, 1.191900e-002, 3.272046e-002, -2.276498e-002, -7.108910e-002, 7.362847e-002, -3.555630e-002, -4.077015e-003, 1.387629e-002, -3.190263e-003, 2.280943e-004, 4.219222e-002, -1.943410e-002, -1.577548e-002, 5.110035e-002, 9.877621e-003, 8.720651e-002, 2.088485e-002, -4.777037e-002, -5.155678e-002, 3.511949e-002, 5.318129e-002, 2.214696e-002, 2.356761e-002, -3.940898e-002, -1.907441e-002, 9.144701e-003, 1.059090e-001, 3.518082e-002, -7.666592e-002, 6.506889e-002, -1.521653e-003, -3.687971e-004, -2.785715e-002, -3.265351e-002, -4.220176e-002, -2.966013e-002, -4.446556e-003, -3.084053e-002, 1.048545e-001, 2.607866e-002, 6.931740e-002, 8.923680e-002, 1.935960e-002, -5.495907e-002, -5.389952e-002, -2.314606e-002, 6.787057e-002, 2.043208e-002, 1.376976e-002, -7.228854e-003, -1.984218e-002, -7.775309e-003, 1.425108e-002, -4.044284e-002, 1.081677e-002, -6.738698e-004, 1.573314e-002, 7.361698e-002, -1.642744e-001, -1.133961e-002, 2.445381e-002, -6.463077e-002, -3.070829e-002, 1.738662e-002, 5.763558e-003, -3.512854e-002, -2.918313e-002, -4.122532e-002, -2.051933e-002, 2.594835e-002, 2.036952e-002, 1.752547e-002, -1.430726e-002, 6.104224e-002, -2.633530e-002, -5.393411e-003, -1.567096e-002, 8.047690e-002, -7.781181e-002, 4.780216e-002, -1.543512e-002, 1.407177e-001, -1.076328e-001, 1.741420e-002, 9.167521e-003, -3.328761e-002, -2.163369e-002, -6.301320e-002, -3.556789e-002, -1.138377e-002, -1.409449e-002, -2.877902e-002, -9.197311e-004, 6.074899e-002, 5.860329e-003, 4.723894e-002, 3.083495e-002, -7.183969e-003, 7.995675e-002, 4.984005e-002, -5.727514e-002, 1.033125e-001, 1.064616e-002, 1.952304e-002, -7.839469e-003, 4.318539e-002, -9.944926e-002, 1.527641e-002, 8.289661e-003, -1.741445e-002, 2.734728e-002, 2.130062e-002, 3.473672e-002, 2.120806e-002, -6.998457e-003, 1.567251e-002, 6.243565e-003, 5.263380e-002, 1.962392e-002, -3.391014e-003, 4.740562e-002, -6.142500e-002, -1.038116e-002, -3.288372e-002, -2.054653e-002, 1.047040e-001, 8.168380e-003, 2.710610e-003, 8.872978e-003, 8.378904e-002, -1.109239e-002, 5.783511e-002, 1.059178e-002, -1.333852e-002, 3.078756e-002, -5.747283e-003, -2.451612e-002, -6.945234e-003, -4.323408e-002, 1.218421e-004, 3.667352e-002, 1.851330e-002, 6.051617e-002, -2.298227e-002, -2.478268e-002, -1.759152e-002, 1.003493e-001, -9.388416e-003, -2.804454e-002, -9.615103e-002, 1.026764e-001, -8.286738e-002, 9.417716e-003, 5.362193e-002, -4.550877e-002, 1.154029e-003, 8.145133e-003, -1.279903e-002, 8.369306e-003, 1.519015e-002, 3.053823e-003, 1.928229e-002, -3.103532e-002, -7.959355e-002, 1.935655e-002, -4.537576e-003, 5.730000e-002, 8.499738e-002, -3.634895e-002, 6.711153e-002, 3.508589e-002, -2.395729e-003, 5.299685e-002, -9.162209e-002, 2.985030e-002, -6.939443e-003, 1.993878e-003, 3.550708e-002, -7.209461e-003, 2.625849e-003, -2.689508e-003, -1.111752e-002, -1.428537e-002, -1.414687e-002, 1.350486e-002, 1.471055e-002, 1.791672e-002, -2.804929e-002, 3.733673e-002, 1.599505e-002, -6.819779e-002, 2.683750e-002, -2.301505e-002, -6.373968e-002, 1.713124e-002, 3.684608e-003, -3.712879e-003, -1.866220e-002, -1.153889e-002, -1.543601e-002, 2.830295e-002, -5.080395e-004, -3.505225e-002, 9.161567e-003, 3.018778e-002, 2.098774e-002, 1.102651e-002, -3.118170e-003, 1.900331e-002, 2.501358e-003, 1.867454e-002, -2.912688e-003, -1.254764e-002, 2.588206e-002, -5.160249e-003, 1.383479e-002, -4.457100e-002, -9.000232e-002, 4.862876e-002, 4.556153e-002, -5.123155e-002, -5.488371e-003, 6.666340e-003, -1.006315e-002, -1.411062e-002, 1.070648e-002, 1.284398e-002, 2.516577e-002, 9.139549e-003, 7.072534e-003, 2.962143e-003, -1.492580e-002, -3.011757e-002, -2.633817e-002, -8.948002e-003, 8.235444e-003, 5.156202e-002, -1.151008e-002, -1.509790e-002, -2.291959e-002, 1.785992e-002, 6.736051e-003, -2.944127e-002, 3.260407e-002, -3.893618e-002, -1.020679e-002, -3.098266e-003, -1.020347e-002, 5.105085e-003, 1.913406e-002, 4.388478e-003, 7.630985e-003, 1.246206e-002, 8.783552e-004, -9.774837e-003, 1.319544e-002, -1.942301e-002, -1.596787e-002, 4.091371e-002, -2.401470e-002, 3.568124e-003, -1.961121e-002, 1.816896e-002, -5.903539e-002, 1.860391e-002, -1.522210e-002, 5.127877e-003, -1.169839e-002, -9.079324e-003, -1.235295e-003, -1.969025e-002, 2.942284e-003, 9.484494e-003, -2.863813e-003,

© ISO/IEC 2004 — All rights reserved


Copyright International Organization for Standardization
Provided by IHS under license with ISO
No reproduction or networking permitted without license from IHS
Not for Resale

5.335069e-003, 1.647015e-002, 7.370941e-003, -9.521970e-003, -3.435311e-002, -1.213496e-003, 1.541332e-002, -9.298551e-003, 8.734695e-003, 1.808589e-002, -5.939479e-002, 6.012970e-002, -8.222150e-002, 2.058562e-002, 1.064513e-002, -1.991110e-002, 2.216643e-003, 1.913417e-002, -2.252832e-002, -6.240549e-003, 4.552919e-003, 9.143760e-004, -2.401456e-004, 3.340922e-004, -6.270556e-003, 9.279675e-003, -1.297191e-003, -1.674327e-002, -1.296645e-002, -8.358227e-003, 2.570596e-002, -6.705476e-005, -8.116876e-003, -3.552054e-002, 2.730595e-017, -1.020352e-003, 3.888897e-003, -2.753073e-002, 3.250715e-002, -3.612002e-002, 1.587919e-002, -1.042827e-002, 4.541297e-002, -1.386392e-002, -7.238456e-003, 3.636073e-002, -3.636073e-002, 7.238456e-003, 1.386392e-002, -4.541297e-002, 1.042827e-002, -1.587919e-002, 3.612002e-002, -3.250715e-002, 2.753073e-002, -3.888897e-003, 1.020352e-003, -2.831633e-003, -2.656150e-002, 1.651794e-002, -7.630510e-002, 1.832182e-002, -4.055539e-002, 1.717866e-002, 1.863709e-002, 2.109873e-002, 2.676833e-002, 2.455424e-002, 1.454168e-002, 4.939244e-002, -9.079729e-003, -3.260413e-002, 2.145080e-002, 6.475679e-003, 3.405668e-003, 2.580500e-002, -2.600022e-002, 1.078946e-002, 1.695170e-002, 2.382232e-002, -2.706760e-002, 6.018761e-003, -2.638953e-002, 1.444729e-002, -1.593150e-001, 5.802149e-002, -4.774237e-002, -4.895791e-002, -2.103232e-002, -4.033308e-002, -3.737222e-002, -5.577023e-002, -4.124919e-002, -6.459381e-002, -5.968340e-002, -1.363589e-003, 1.993473e-003, -5.797156e-002, 9.313697e-003, -3.159937e-002, 6.484640e-002, 4.587112e-002, -5.937996e-002, 6.050644e-002, -2.192246e-002, 9.097177e-002, -7.181658e-002, 1.139537e-001, -1.004228e-001, 1.986305e-002, 8.713890e-002, 2.461502e-002, 2.879781e-002, -2.374696e-003, 2.601440e-002, 3.664633e-002, 3.454852e-002, 1.323374e-002, -3.078345e-002, 5.420612e-002, 1.921816e-003, -1.293589e-001, 1.467262e-001, -3.885463e-002, -2.944608e-002, -1.154437e-002, -7.509436e-002, 1.153047e-002, 6.949453e-003, 8.398286e-003, -2.059184e-004, 2.079431e-002, 1.242295e-002, -1.375181e-002, 7.582520e-003, 2.457808e-002, 3.408130e-002, -2.694614e-003, -2.849098e-002, 1.429018e-002, -1.744072e-003, -2.643580e-002, -2.719861e-003, 2.139195e-002, 7.147814e-003, 5.725538e-002, -9.314426e-002, -8.550275e-003, 1.117520e-001, -3.970744e-002, -3.530265e-002, -5.906619e-002, 9.066924e-002, -6.517227e-002, 6.773982e-002, 3.649526e-002, -3.506437e-002, 3.930761e-002, 5.863305e-002, -1.166541e-002, -2.628338e-002, -3.170695e-002, -6.280623e-002, 1.428764e-003, -2.710948e-002, -2.880657e-002, 4.945001e-002, 1.709635e-002, -3.108011e-002, 1.421629e-001, -3.940097e-002, -8.061898e-002, -1.302493e-001, 9.124904e-002, 9.606415e-002, 3.834515e-002, 3.216741e-002, -7.713050e-003, 3.643033e-002, 3.518372e-002, 1.663457e-002, 8.111433e-003, -2.637760e-002, -3.994740e-002, 9.195985e-003, 2.016241e-002, 2.354053e-003, 3.642830e-002, 1.909527e-002, 6.761296e-002, -1.337312e-002, -5.314056e-002, -5.430473e-002, -8.590139e-003, 3.180290e-002, 1.674069e-001, -2.565237e-002, 8.933814e-002, 1.830813e-002, 1.962957e-002, 7.234042e-002, -4.287341e-002, -4.113860e-002, 2.258562e-002, -2.968394e-002, -2.487938e-003, -4.995849e-003, -4.285903e-003, -4.239450e-002, -8.378430e-003, -2.194463e-002, -2.485244e-002, -2.405275e-002, 5.811833e-002, 5.681277e-002, -3.284563e-002, 4.525455e-002, -3.069054e-002, 4.997531e-002, 9.729834e-002, -3.482595e-002, 1.430661e-003, 1.524362e-002, -7.343878e-003, -1.588984e-002, 9.168734e-003, -1.992636e-002, 1.613280e-002, -2.179123e-002, 1.389403e-002, 4.824052e-003, 1.882910e-002, -7.512607e-003, -3.616285e-003, -4.272507e-004, -2.374686e-002, 1.371763e-002, -1.348482e-004, 4.312390e-002, -3.622690e-002, 5.006702e-002, 9.053746e-002, 3.096045e-002, -2.777581e-002, 5.031294e-002, -5.800151e-002, -1.386425e-002, 5.241479e-002, 1.438947e-003, 2.882850e-002, -2.947861e-003, 3.299954e-002, -2.172615e-002, -3.540082e-003, -1.602533e-003, 2.172317e-002, 2.588515e-002, -9.504342e-003, 4.301564e-002, 1.207978e-002, -2.804615e-002, 3.093102e-002, -4.887394e-002, 3.522129e-002, -2.492384e-002, 6.954797e-002, 2.125289e-002, -3.778691e-002, -6.223040e-005, 3.009598e-003, 9.920187e-003, 2.379683e-002, 1.523691e-002, 1.333741e-002, -1.367597e-002, 1.732204e-002, -1.290553e-002, -1.918036e-002, 2.193539e-002, 1.639041e-002, 3.821906e-002, -5.142597e-003, -1.299891e-002, 1.731824e-002, -8.137306e-003, -4.440458e-002, 7.447062e-002, 4.295790e-003, 1.607871e-002, 1.982080e-002, 4.044183e-003, -3.594101e-002, 1.856435e-002, -1.746220e-002, 1.857746e-002, 1.867137e-002, 4.579182e-003, 5.082854e-003, -5.881055e-003, -8.244162e-003, 2.053047e-002, -2.013573e-003, 2.304920e-002, -4.074304e-003, -1.173282e-002, 9.153086e-003, -5.917534e-002, 4.163754e-002, 2.231164e-002, -1.026960e-002, 4.351516e-002, -5.134220e-003, 1.372253e-002, 4.338674e-002, -5.396182e-002, -1.724569e-003, 1.299367e-002, -3.982303e-003, 2.637678e-002, 9.673625e-004, -3.520719e-003, -8.636989e-003, 6.065022e-003, -1.731818e-002, 1.834693e-002, 2.437362e-002, -2.164300e-005, 8.455534e-003, 1.020855e-002, -1.341794e-002, 1.802360e-002, -2.379000e-002, 3.118026e-004, 3.009543e-002, -1.851521e-003, 4.446117e-002, -6.629784e-002, 2.586439e-002, 3.272465e-003, -7.977994e-003, 5.564039e-003, -2.898156e-003, 1.038824e-002, -6.274980e-003, 3.580519e-003, 2.231179e-003, 5.873960e-003, 1.139294e-002, 1.373968e-003, 2.227559e-002, -1.968347e-002, -1.877239e-002, 4.080064e-002, -4.043086e-002, 1.604189e-002, -7.584815e-003},

{2.447381e-004, -6.035910e-003, -3.606762e-003, 1.462210e-002, -6.787978e-002, 3.557139e-002, -2.538481e-002, -2.883205e-002, 1.683976e-002, -3.893387e-002, -1.878312e-004, 1.336038e-002, 1.336038e-002, -1.878312e-004, -3.893387e-002, 1.683976e-002, -2.883205e-002, -2.538481e-002, 3.557139e-002, -6.787978e-002, 1.462210e-002, -3.606762e-003, -6.035910e-003, 4.484779e-003,


© ISO/IEC 2004 — All rights reserved

Copyright International Organization for Standardization
Provided by IHS under license with ISO
No reproduction or networking permitted without license from IHS
Not for Resale

6.376451e-003, -2.640923e-002, 2.257238e-002, -3.428871e-002, -6.868634e-002, 4.422389e-002, 2.948093e-002, -4.160908e-002, 2.519880e-002, 5.058235e-002, 9.700085e-002, -1.923401e-002, -1.354260e-002, -2.262116e-002, -1.598585e-002, 3.289531e-003, -6.163026e-002, 2.903898e-003, -1.578641e-002, -2.392113e-003, -6.744523e-002, 8.741805e-005, -2.535818e-002, 1.147464e-003, -1.452091e-001, 8.646156e-002, -1.467246e-002, -8.878888e-002, -5.609736e-003, -8.069312e-002, -1.722401e-002, -3.829341e-002, 1.412553e-002, -5.933759e-002, -1.093887e-004, -8.681977e-003, 3.191357e-002, 1.639933e-002, -4.716044e-002, 1.752166e-002, 8.232389e-002, -1.404571e-001, 8.111620e-002, 2.114341e-002, 3.231448e-002, 7.282990e-002, 5.038544e-002, -7.882907e-002, -9.627937e-002, 7.713266e-002, 6.842848e-002, -5.217729e-002, -3.226081e-003, -3.339053e-002, 1.197903e-002, -5.823886e-002, -2.780792e-002, -3.329314e-002, -1.904818e-002, -5.413341e-003, -1.396831e-002, 8.844903e-003, -8.239038e-002, 1.775551e-002, -8.713810e-003, -8.078219e-002, -2.592599e-002, 5.776294e-002, 8.194193e-002, -5.277307e-002, 4.637825e-002, 7.874914e-003, -7.126559e-003, -2.325314e-002, 9.263696e-002, 4.509493e-002, -2.264538e-003, 9.762093e-004, 5.233680e-002, 2.044659e-002, -3.630797e-003, 6.633913e-003, 4.506636e-003, -2.698252e-002, 2.146401e-003, 2.212832e-003, -8.996322e-002, 4.179374e-002, -2.522039e-002, -2.014236e-003, 5.791740e-002, -6.690516e-002, 3.845258e-002, -1.268660e-002, -1.514782e-002, -3.562625e-002, 2.815446e-002, 1.385399e-002, -3.257869e-002, 1.749711e-002, 8.879942e-002, 4.129238e-002, 1.730679e-005, -2.328745e-002, 2.795945e-002, 1.770791e-002, 1.812809e-002, -3.586709e-002, -1.221944e-002, 6.879730e-002, -5.581819e-002, -3.679074e-002, 1.151802e-001, -3.417312e-002, -9.232980e-003, -3.746812e-002, 1.217555e-002, 8.224671e-002, 1.959067e-002, 1.843404e-002, 1.460161e-002, -5.557679e-003, 2.413903e-003, 5.631815e-003, -2.674372e-002, -2.243854e-002, -3.580641e-002, -6.804707e-002, -2.663944e-003, 8.557356e-004, 6.055316e-003, -3.399591e-002, -1.015719e-001, 7.561920e-002, -8.018049e-003, 3.237575e-002, -4.338451e-003, 1.491863e-002, 6.065827e-002, -6.041693e-003, 3.316108e-002, -6.731943e-002, 3.562733e-002, -3.293030e-002, -8.815474e-002, -3.705666e-003, -8.311299e-003, 1.612821e-002, 2.897249e-002, -3.719696e-003, -1.703302e-002, -2.823683e-002, 8.593194e-003, -1.741664e-002, -1.840138e-003, -4.408422e-003, -4.825587e-002, 3.552387e-002, -8.838033e-002, 3.215313e-002, -4.685800e-002, -3.889215e-002, 4.667447e-003, 9.149852e-003, -2.744045e-002, 5.201882e-002, -5.909187e-002, 1.908660e-003, 5.485435e-003, -6.556836e-003, -1.974456e-002, 1.816609e-002, -8.328727e-003, -1.721926e-002, -3.641685e-003, 2.929397e-002, 3.179453e-002, -5.061265e-002, 5.427919e-003, 1.442519e-002, 3.270771e-003, 8.993125e-003, -4.648041e-002, -2.484878e-002, 9.068325e-003, 7.401843e-002, -5.806720e-002, 1.260508e-002, -6.169065e-002, 1.279197e-002, 1.192509e-002, -1.386382e-002, -4.899788e-002, 1.620205e-002, 3.767487e-002, 1.499377e-002, -6.582973e-003, 1.263932e-003, 2.375218e-002, 6.849996e-003, 1.042822e-002, -5.439554e-002, 3.912562e-002, -6.306730e-002, 1.297453e-002, 1.004687e-002, -3.713656e-003, -1.595713e-002, 2.915232e-002, -1.018364e-002, -4.311405e-002, 3.612477e-002, 2.961814e-003, 1.401624e-002, -1.513477e-002, -1.698203e-002, 2.060062e-002, 2.203770e-002, -1.101956e-002, 7.056579e-003, 5.959290e-003, 1.765753e-002, 2.332921e-002, -1.527607e-002, 2.006503e-002, -6.699776e-002, 3.050887e-002, 8.679784e-003, -7.210684e-002, -1.116284e-002, 8.794895e-003, 1.742872e-002, -3.738401e-002, 2.145974e-002, -3.065028e-002, -1.479060e-002, 2.721750e-002, -1.196917e-002, 1.851623e-003, 1.338199e-002, 4.115753e-003, -8.297090e-003, -3.913298e-003, 1.290987e-002, 1.338300e-002, 1.019490e-002, 3.864256e-005, -4.477062e-002, 2.937706e-002, -2.945618e-002, -1.540253e-003, 8.797298e-003, -4.714724e-002, 3.988874e-002, 2.040989e-002, -1.079422e-002, -5.306273e-003, -3.856665e-002, 2.281137e-002, 7.109742e-003, -1.786731e-002, 4.540259e-003, 2.929798e-002, 4.874622e-003, 2.404721e-003, -6.243236e-004, -5.038516e-003, -4.217557e-003, 1.637603e-002, 5.732500e-003, -3.442449e-002, 1.460819e-003, -1.128092e-002, -2.676128e-004, 4.410655e-002, -1.116024e-002, 2.484969e-002, 3.676627e-002, -1.967435e-002, -9.942471e-003, 5.628119e-003, -5.792212e-003, -5.184769e-003, -8.955731e-003, 2.723629e-002, 9.476365e-003, -7.200751e-003, -1.054294e-002, -1.263396e-002, 4.354929e-003, 7.714085e-003, 3.544032e-003, -1.544279e-002, -2.927754e-004, -2.285037e-002, -1.340480e-002, 3.753311e-002, -6.239623e-004, -4.430338e-017, -1.063406e-003, -1.101392e-002, 9.358332e-003, 2.958183e-002, -3.479235e-002, 2.407830e-003, -1.176092e-002, -6.521560e-004, -6.538994e-003, -1.114273e-002, 1.040283e-002, -1.040283e-002, 1.114273e-002, 6.538994e-003, 6.521560e-004, 1.176092e-002, -2.407830e-003, 3.479235e-002, -2.958183e-002, -9.358332e-003, 1.101392e-002, 1.063406e-003, 3.941919e-002, -7.280092e-003, 1.753472e-002, 3.910368e-003, 6.411655e-002, 1.858245e-002, -1.110103e-002, 2.233546e-002, 2.911213e-002, -1.363484e-002, -7.043090e-003, 2.603303e-002, -6.658684e-003, -2.440269e-002, 9.078174e-003, -1.329554e-002, 6.686170e-003, -3.964161e-002, 3.431665e-002, 1.426802e-002, -3.654349e-002, 9.826240e-002, -4.135206e-002, -3.305329e-002, 4.763185e-002, -1.130936e-001, -6.227143e-002, -4.701092e-002, 1.200379e-001, -1.473473e-002, 2.249391e-002, 5.085938e-002, 2.751677e-002, 2.342138e-002, 4.254727e-003, 8.016469e-002, 6.709653e-002, -1.882948e-002, 2.111753e-002, -6.147440e-003, -7.620292e-002, 5.832474e-002, 2.014025e-002, -8.103844e-002, -6.399384e-002, 8.227600e-002, 6.341629e-003, 2.284691e-002, 7.188149e-002, 6.242299e-002, -1.321745e-001, -4.780300e-002, 4.794104e-002, 4.218545e-002, -3.965293e-002, -3.227531e-002, -1.948035e-002, 3.803728e-002, 2.474056e-002, 3.852540e-003, -3.304858e-003, 5.261891e-004, 4.193110e-002,

© ISO/IEC 2004 — All rights reserved


Copyright International Organization for Standardization
Provided by IHS under license with ISO
No reproduction or networking permitted without license from IHS
Not for Resale

2.048634e-002, -1.134779e-002, -9.747924e-002, 5.672985e-002, 1.424431e-001, -7.477018e-002, 1.901106e-002, 4.341342e-002, -9.633490e-002, -1.352104e-001, 7.674551e-002, -1.920548e-002, -6.913767e-002, -8.152331e-003, -4.644129e-002, -1.003291e-002, 1.905063e-002, -1.459548e-002, -2.599934e-002, 4.113442e-002, 4.711427e-002, 2.344361e-002, -1.909637e-002, 4.101571e-002, -1.420017e-003, 1.182461e-001, -1.641286e-002, 5.013811e-002, 8.144100e-002, -8.612294e-002, -1.713724e-001, -4.608369e-002, 1.911871e-002, -3.623827e-002, 5.909304e-002, -5.342925e-003, 2.526588e-002, 3.301139e-002, 2.369316e-002, 3.416543e-003, -7.889333e-003, -1.941689e-002, -2.030679e-002, -2.901373e-002, 4.123188e-003, 6.037272e-002, -1.333284e-002, -1.599776e-002, 4.273192e-002, -7.000690e-002, 1.143583e-001, -6.011679e-002, -5.152639e-002, 7.099592e-002, -1.250632e-002, -4.932695e-002, 1.175601e-002, -6.161383e-002, 1.041720e-001, 4.045380e-002, 2.323928e-002, 4.599715e-002, 1.059846e-002, -6.548561e-003, 2.812934e-002, 4.380294e-002, 6.720892e-003, -6.840335e-002, -3.988901e-002, 6.336297e-002, -6.650212e-002, 1.942354e-002, -6.704647e-004, -9.419694e-002, 1.296779e-001, 1.590074e-002, -9.134286e-002, 7.582371e-002, -3.553081e-002, 3.157536e-002, 7.870839e-002, -6.874519e-003, -9.608542e-003, 1.951986e-002, 3.426862e-002, 3.327073e-002, 3.953751e-003, -1.146829e-002, 2.871055e-002, 4.446581e-002, 1.670986e-002, -2.426884e-002, -4.523970e-003, -1.217083e-002, -4.506813e-002, 2.849658e-002, 5.255763e-002, -1.255249e-001, -1.186684e-002, -1.482873e-002, -2.348516e-002, 2.663810e-002, 3.321682e-003, -6.765897e-003, -1.001059e-002, 1.280588e-002, 1.554963e-002, 1.955632e-002, 4.849040e-003, 2.331390e-002, -1.886373e-002, -4.295803e-002, 1.448110e-002, 2.147950e-002, 3.313637e-002, 4.138901e-003, -2.123561e-002, 2.052855e-002, -2.300167e-002, 1.930666e-002, 5.486868e-003, 5.988437e-003, -3.881427e-003, -2.383087e-002, -3.474620e-002, 2.122496e-002, 6.510325e-003, 4.887723e-002, -1.717209e-002, -3.679534e-002, 2.375678e-002, 5.177835e-002, 1.607077e-002, -4.341016e-003, -3.461116e-003, -2.538944e-002, 5.530363e-003, 1.922225e-002, 3.910424e-002, 2.136525e-002, -2.402114e-002, -1.333863e-002, 3.055202e-002, -4.596573e-002, 6.610496e-003, -3.805629e-002, -3.940018e-002, -4.470968e-003, 9.905857e-003, 5.435267e-002, -2.513876e-003, -1.570834e-002, 1.612597e-002, 2.041148e-002, 1.539866e-002, -1.503621e-002, -6.674330e-003, -2.393862e-002, -4.506936e-003, 2.360615e-002, -2.619639e-003, 7.522494e-004, 2.539539e-002, -1.022744e-002, 2.037936e-002, -2.001563e-002, -3.674666e-002, -3.726857e-002, 1.200685e-002, -5.492995e-002, 2.580072e-002, 1.239747e-002, -1.651493e-002, 4.141584e-002, -9.290086e-003, -1.465257e-002, 2.090918e-002, 8.711601e-003, -2.147448e-003, -4.046438e-003, -1.414856e-002, -5.964611e-003, 7.254055e-003, 2.133425e-002, 4.995179e-002, -2.987469e-002, 1.609075e-002, 1.059650e-002, -7.383934e-002, 1.454034e-002, -3.831119e-002, -1.885648e-002, 1.086408e-002, -3.081884e-002, -3.395210e-003, 4.064293e-002, 3.823843e-003, -1.108084e-002, 3.364988e-003, 1.603499e-002, 1.018300e-003, -2.009436e-002, -1.556195e-003, 5.776402e-003, -1.108646e-002, 6.180009e-003, 1.238557e-002, 7.704085e-003, 3.011412e-002, -1.159469e-002, -2.160963e-002, 2.164290e-002, -3.140821e-002, 8.227183e-002, -5.634918e-002, -3.736203e-002, 1.796421e-002, -9.746478e-003, 8.784783e-003, 6.307175e-003, -1.050733e-002, 1.662002e-002, 1.509754e-002, -1.370445e-002, -1.162177e-002, 3.238022e-003, -9.028793e-003, -3.268499e-003, 4.752628e-003, 6.503317e-003, 1.662160e-002, -1.226911e-002, -1.315425e-002, 1.930678e-002, -3.415657e-002, -6.834636e-002},

{-4.530048e-004, 3.868601e-004, -1.373869e-002, 2.398262e-003, -4.672285e-003, -1.442023e-002, 3.542768e-002, -4.085394e-002, 2.955579e-002, 1.474380e-002, -1.982505e-002, -4.421629e-002, -4.421629e-002, -1.982505e-002, 1.474380e-002, 2.955579e-002, -4.085394e-002, 3.542768e-002, -1.442023e-002, -4.672285e-003, 2.398262e-003, -1.373869e-002, 3.868601e-004, -6.220368e-003, -2.336554e-002, -5.400666e-002, 1.435780e-002, 6.641176e-002, -1.354753e-001, 1.512750e-002, 3.721017e-002, -3.303643e-002, 1.579656e-002, -1.362388e-003, 1.669051e-002, 1.012212e-002, 4.558463e-003, 1.468251e-002, 4.381663e-003, 2.949652e-002, 6.043359e-002, -4.811073e-002, -3.257639e-002, 8.699676e-003, -5.113466e-003, 1.521767e-002, -7.884210e-003, -5.237864e-002, -3.001978e-002, -8.827070e-002, 6.819271e-003, 5.800769e-002, -5.106684e-002, -7.928208e-003, -1.589151e-002, -2.579713e-002, 1.307029e-002, 1.648645e-003, 1.694454e-002, 2.650629e-002, -1.453009e-002, -1.421406e-002, -6.616209e-003, -3.731064e-002, -2.641441e-002, 1.983271e-003, -2.186728e-002, 1.098232e-002, -4.871020e-003, -2.129248e-002, -3.168682e-002, -2.949552e-002, -2.310306e-002, 3.485825e-002, -6.149899e-002, 3.595324e-002, 9.108834e-003, 1.842291e-002, -2.555785e-002, -3.386684e-002, 1.778227e-002, 3.044458e-002, 4.347839e-002, 3.637903e-002, -5.219911e-002, 1.555476e-002, 4.074485e-002, -9.161590e-002, 7.259478e-002, 7.658514e-002, -7.155283e-002, -2.061853e-003, -2.744204e-003, -3.102760e-003, -4.996226e-002, -9.737613e-002, -4.231361e-002, 4.531698e-002, -2.320348e-002, 5.955758e-003, 3.996744e-003, -1.940904e-003, -4.327489e-002, -3.422774e-002, -3.231278e-002, -2.164360e-002, -2.191668e-003, -2.149053e-002, -4.937249e-002, 5.466168e-002, 5.884951e-002, -9.844543e-002, 7.488179e-002, 2.670069e-002, 3.326503e-002, 4.473140e-002, -1.797102e-002, 3.708575e-002, -1.221505e-002, -6.372421e-002, -6.783296e-003, -4.049452e-002, -3.023804e-002, 3.923914e-002, 2.582054e-002, 1.156400e-002, 1.539860e-002, 2.614699e-002, 1.947254e-002, 4.853818e-002, 1.536041e-002, -6.890330e-002, -2.695335e-002, 9.528785e-002, 2.487200e-003, 4.326773e-002, -1.710388e-002, -3.721883e-002, 4.881577e-003, -5.930605e-003, -1.350373e-002, -8.362056e-002, 8.833184e-002, -3.268241e-002,



--`,,```,,,,````-`-`,,`,,`,`,,`---

© ISO/IEC 2004 — All rights reserved

Copyright International Organization for Standardization
Provided by IHS under license with ISO
No reproduction or networking permitted without license from IHS
Not for Resale

1.814304e-002, 2.643486e-002, 2.491019e-002, 2.876068e-002, 1.197102e-003, -2.187715e-002, 1.612215e-002, -5.771352e-003, -1.479206e-002, -9.124054e-003, -3.445414e-003, -7.134585e-002, -8.866839e-002, 4.173076e-002, -5.609214e-003, -1.475071e-001, 1.065814e-001, -5.598475e-002, 8.965186e-002, -5.305548e-002, 1.061936e-001, -5.835221e-002, 9.301883e-002, -4.522259e-002, -5.655360e-002, 3.071520e-003, -9.124712e-003, 8.082317e-003, 1.075880e-002, 3.600540e-002, 2.345692e-002, -2.968369e-002, -1.809207e-002, 4.688153e-003, -8.100142e-004, 2.401958e-002, -1.930130e-002, 9.022357e-002, -8.709951e-002, 2.403010e-002, 1.000013e-001, -3.496962e-002, -5.380252e-003, 4.135269e-002, -2.005375e-002, -3.088068e-002, 2.664841e-002, -3.379423e-002, -2.108371e-003, 4.559063e-002, 4.985172e-003, -4.529262e-003, 7.632514e-003, 1.171433e-002, 1.478451e-003, -1.742064e-002, -2.673160e-002, 2.507215e-002, 2.832593e-002, -6.937310e-002, 2.089607e-002, 5.001942e-002, -1.671604e-001, -1.145423e-001, 6.774173e-002, 4.903427e-002, -8.781789e-002, 4.293672e-002, 1.807431e-002, -7.623340e-002, 1.875016e-003, 8.121956e-003, -5.832197e-003, 1.946553e-002, 4.363718e-003, -8.557619e-003, -3.574489e-003, -9.504984e-003, -6.033155e-003, 8.385805e-003, 2.722250e-004, 3.950134e-002, 2.001730e-002, -4.325593e-002, -3.869055e-002, 9.856366e-002, -3.533654e-002, 9.061276e-003, -4.638914e-002, 3.658608e-002, -1.838190e-002, -2.913135e-002, -1.959473e-002, -8.816041e-003, -2.967539e-004, 2.607000e-003, 1.693576e-003, 2.242068e-002, -1.235655e-002, -2.271811e-003, -7.963892e-003, 2.382078e-002, 2.006336e-002, 5.501029e-003, 6.434786e-003, -9.017719e-003, 4.269547e-002, -1.029112e-001, 7.985474e-002, 3.151823e-002, 2.304611e-002, -1.847813e-002, -2.589969e-002, 6.308098e-003, -1.791733e-002, -2.150573e-003, -4.494860e-003, -3.060723e-003, 1.283851e-002, -5.559695e-003, -8.374672e-003, -5.041692e-003, -1.307766e-002, 2.503834e-004, 2.506826e-003, 3.652491e-003, -1.178675e-002, -1.024545e-003, 1.132039e-002, -1.623132e-002, 3.328562e-002, -3.589451e-002, 7.551024e-003, -7.657138e-003, -1.189909e-002, 1.562106e-003, -1.724561e-002, -1.492741e-002, -1.525011e-002, 6.244828e-003, -9.757915e-004, -1.373103e-002, 1.492236e-003, 5.382417e-003, -1.921285e-003, 4.137260e-003, -4.425395e-003, -1.852016e-003, 1.430565e-002, -8.984619e-003, -3.695701e-003, 8.676042e-003, 2.115960e-002, -2.812961e-002, 7.268288e-003, 1.138504e-003, -1.859020e-002, 1.141083e-002, 1.046155e-002, -9.910249e-003, -2.827117e-002, 1.689499e-002, -1.016440e-002, -1.053783e-002, 1.218173e-002, -5.233498e-003, 1.550338e-003, -1.419781e-002, -9.210177e-003, 5.123315e-003, 3.781535e-003, -3.007916e-003, 1.718356e-002, -1.271057e-002, 1.868148e-002, 1.716200e-002, -3.333935e-002, 7.404976e-003, 7.381992e-017, -2.186300e-003, 6.450379e-003, -3.544380e-002, 8.400349e-003, -2.193740e-002, -1.117688e-003, 1.166295e-002, 1.948778e-002, -1.359830e-002, 1.639299e-002, 2.713218e-002, -2.713218e-002, -1.639299e-002, 1.359830e-002, -1.948778e-002, -1.166295e-002, 1.117688e-003, 2.193740e-002, -8.400349e-003, 3.544380e-002, -6.450379e-003, 2.186300e-003, 1.461168e-002, -7.736031e-003, -5.149514e-003, -2.104450e-002, -1.781008e-002, -6.118258e-002, 1.019824e-001, -5.702239e-002, -7.414431e-002, 9.199950e-003, 1.149087e-002, -3.052951e-002, -8.432210e-003, -8.281544e-003, -8.422731e-004, 1.907004e-003, -4.204389e-002, 7.033676e-002, -1.229903e-002, 3.979130e-003, 8.864530e-003, -5.809013e-002, -1.581856e-003, -2.227668e-002, 6.049775e-002, -7.168186e-002, 1.358536e-002, -7.752665e-002, -2.452492e-002, 2.391161e-002, -3.992047e-003, -6.097785e-002, -1.822965e-003, -3.120955e-003, -2.226347e-002, 7.766019e-002, 4.919439e-002, 2.463253e-002, -1.817699e-002, 3.632382e-002, 4.619721e-002, 1.555378e-002, -6.999521e-002, 7.640459e-002, -3.778211e-002, -3.716828e-004, 2.318828e-002, -6.845540e-002, -6.708052e-002, -6.004523e-002, -5.609323e-002, -3.865218e-002, -2.849307e-002, -9.474899e-003, 3.461411e-003, -2.038181e-002, 2.113860e-002, 3.893882e-002, -6.117288e-002, 9.471717e-004, 1.169057e-002, 1.917679e-002, -6.511677e-002, 3.264296e-003, 9.402786e-002, -1.179050e-001, 5.607505e-002, -2.155829e-002, 2.972270e-002, 6.405557e-002, 1.587391e-001, 8.562006e-002, -7.091399e-002, 1.233398e-001, 6.403829e-003, -6.399996e-003, 2.072052e-003, -1.170530e-002, -1.224895e-002, 1.127062e-002, 3.206163e-002, -1.896909e-004, -2.026278e-002, 1.598765e-002, 1.349647e-002, -6.617986e-003, -8.876649e-002, -3.170874e-003, 5.114916e-002, -1.457277e-001, -2.518134e-003, -6.123858e-002, -1.436408e-002, -1.069230e-001, 7.836666e-003, -2.832801e-002, -5.771762e-002, -3.434935e-002, 3.961180e-003, 4.523038e-002, 1.106139e-002, 9.389077e-003, 1.291847e-002, 7.650051e-003, 2.258879e-002, 3.912829e-002, 5.679676e-002, 5.849559e-002, 2.586120e-002, 4.960805e-002, -8.765757e-003, 2.978838e-002, 5.720380e-003, -8.206786e-002, -7.691078e-003, -2.785664e-002, 1.127883e-001, -3.517853e-002, 7.678494e-002, 4.156199e-002, -1.029900e-002, 1.765694e-002, 4.070392e-002, 1.763566e-002, 9.186024e-004, -1.886086e-002, -2.092262e-002, -1.927079e-002, 9.433058e-003, 1.103791e-002, 2.242607e-002, 1.276821e-002, -2.793146e-003, 3.747332e-002, -1.540253e-002, 2.077382e-002, -2.849692e-002, -1.331389e-003, -3.886953e-002, 9.562936e-002, 2.513252e-002, -3.052223e-002, -8.239543e-003, -9.211562e-002, 1.100146e-002, 7.151926e-003, -2.799891e-003, 1.460684e-002, 1.174252e-002, 6.859747e-003, 7.956197e-003, 3.320996e-002, 5.578973e-002, 8.334465e-003, 9.201343e-003, 1.207705e-002, -5.832414e-002, 4.512483e-002, -9.984249e-002, 1.257774e-001, -9.276479e-002, -1.084825e-001, 4.168710e-002, 2.800616e-002, 2.365882e-003, -5.645983e-002, 7.929006e-002, -1.197953e-002, -2.843219e-002, 2.897715e-002, 3.314804e-002, -1.512339e-002, 4.321798e-003, -1.426580e-002, -5.142153e-003, -2.747307e-003, 1.948445e-002, -1.606758e-002, -3.591694e-002, 6.383995e-002, 2.320975e-002, -1.053834e-002, -2.425918e-002,

© ISO/IEC 2004 — All rights reserved


Copyright International Organization for Standardization
Provided by IHS under license with ISO
No reproduction or networking permitted without license from IHS
Not for Resale

2.301820e-002, -5.701983e-002, 7.718066e-002, 1.903484e-002, 3.349057e-002, -1.495412e-002, -3.215716e-002, 3.077093e-002, 3.114601e-003, 4.132531e-002, 3.337843e-002, 1.778328e-002, -9.088211e-003, 2.920501e-003, -7.500842e-004, -2.031854e-003, 9.015862e-003, -2.002632e-002, 2.760781e-002, -4.169193e-002, 4.597908e-002, 3.566264e-002, -8.731940e-002, 6.590234e-002, -1.061072e-002, 3.541463e-002, 3.355859e-002, -4.139558e-002, 2.250272e-002, -2.645563e-002, 1.723864e-002, 1.747955e-002, 2.009426e-002, 2.164461e-002, -5.036215e-003, 8.072178e-003, -1.459158e-002, -2.717121e-002, -1.030469e-002, -1.599471e-002, 1.621970e-002, 1.925572e-002, 8.500888e-003, 3.445878e-002, -3.512330e-002, 2.736976e-002, -3.263577e-002, 8.584088e-002, -6.730914e-002, 7.886363e-002, -3.087510e-002, -2.839215e-002, 5.225988e-002, -3.524193e-002, 1.802477e-002, 2.147055e-002, 1.768190e-003, 5.390919e-003, 2.085091e-002, -4.917277e-003, 1.377245e-003, -2.338475e-002, 1.820181e-002, 5.221999e-004, -2.140607e-002, 3.942102e-002, -5.278880e-002, 1.781606e-002, 6.698185e-003, -5.595023e-002, 2.861667e-002, -2.505286e-002, 1.579109e-002, 1.092888e-002, -2.623077e-002, -2.432996e-002, 2.547677e-002, 2.823864e-003, 1.170608e-002, -1.771133e-003, 8.219509e-003, -2.928543e-003, -1.362457e-003, -2.513440e-002, -1.005059e-002, -1.037795e-002, -2.737716e-003, 2.133006e-002, -1.098756e-002, 1.510596e-002, -4.568870e-003, -1.922415e-002, 1.924257e-002, 3.931579e-002, -3.455495e-003, 4.876428e-002, -7.040134e-002, 2.418383e-002, 3.047041e-003, 2.251262e-003, 5.977958e-003, -9.226257e-003, 1.142415e-002, 3.845840e-004, 1.212749e-002, 6.689326e-003, 2.152366e-003, -2.141609e-002, -6.560944e-003, 8.827228e-003, -1.348270e-002, 1.256647e-003, 1.405632e-002, -3.672617e-002, 5.716107e-002, -6.059344e-002},

{9.853976e-004, 2.729640e-004, 5.355006e-003, -3.946997e-002, 1.470380e-002, -3.287297e-002, -2.531802e-002, 1.469303e-002, -2.177740e-002, -1.649815e-002, -3.134531e-003, 1.562983e-002, 1.562983e-002, -3.134531e-003, -1.649815e-002, -2.177740e-002, 1.469303e-002, -2.531802e-002, -3.287297e-002, 1.470380e-002, -3.946997e-002, 5.355006e-003, 2.729640e-004, 3.082513e-002, -5.877592e-002, -9.180919e-003, 1.117953e-002, -4.027849e-002, -5.126941e-002, -3.456980e-002, -2.455367e-002, 3.431956e-002, 4.676270e-002, -1.110791e-002, 9.923603e-003, -3.560534e-002, 4.099712e-003, -1.013858e-002, 2.525736e-003, 2.830086e-002, -3.569326e-002, 1.554518e-002, 1.921878e-002, -8.394549e-002, 5.321482e-002, 5.414800e-002, 7.293946e-003, 1.267221e-001, 4.476116e-003, 6.895270e-003, -2.547335e-002, 7.059646e-004, -1.500325e-002, -8.276705e-002, 3.594478e-003, -2.571602e-002, -1.716828e-002, -2.412465e-002, 8.960567e-004, -6.657598e-002, -4.676756e-002, -8.213610e-002, -2.974782e-002, 4.670014e-002, -7.527739e-002, -4.248470e-002, 1.975274e-002, 1.061635e-001, -4.538916e-002, -6.724129e-002, -8.738913e-003, 1.037601e-001, -2.384915e-003, 4.273596e-002, 5.942548e-002, -4.396926e-002, -5.467248e-002, -1.085728e-002, -3.998995e-002, -7.101293e-002, -1.016959e-002, -1.611985e-002, 5.624181e-003, -3.896237e-002, -1.191327e-002, -4.012948e-002, -9.198982e-004, -7.563222e-002, 7.999227e-002, -1.982917e-002, 9.980855e-002, 1.713038e-003, 9.689926e-003, -1.250174e-001, -2.844128e-002, 5.911518e-002, -3.653783e-002, 3.772097e-002, -2.298259e-002, 5.027566e-002, 6.135998e-002, 2.819455e-002, 2.515033e-002, 1.347372e-003, 4.471228e-002, 1.412725e-002, 5.777476e-002, 8.802160e-003, 5.709166e-002, 4.671292e-002, -1.399141e-003, -4.287979e-002, 7.841072e-002, -2.590751e-002, -1.006057e-001, 1.221986e-001, 7.571582e-002, -5.071679e-002, -4.254743e-003, 2.967545e-002, 2.805194e-002, -5.348139e-003, -1.141042e-002, 3.155477e-003, -7.011424e-003, 1.038536e-002, 2.290368e-002, -4.052779e-002, -5.414586e-003, -3.609552e-002, 1.247974e-002, -4.514035e-002, -4.312587e-003, -1.561674e-002, -4.404026e-002, 1.653548e-002, -8.339249e-002, 1.025730e-001, -5.431718e-002, 8.205829e-002, -3.078165e-002, 3.636267e-002, -3.997575e-002, 1.022445e-002, -2.705684e-002, -5.714794e-003, -1.888529e-002, -2.357322e-002, -1.823122e-002, 1.016877e-003, 1.676062e-003, -1.207060e-002, 1.127501e-002, -1.453900e-002, -1.326197e-002, -3.224363e-002, 5.059012e-002, 6.113337e-002, 5.915524e-002, 7.298662e-002, 1.743341e-002, 3.103801e-003, 1.473351e-002, 2.029878e-003, -1.160852e-001, -4.102825e-003, 9.967087e-003, -2.608013e-002, 3.044672e-002, 5.572253e-002, 6.765652e-003, 7.465820e-003, -2.631257e-003, 6.854676e-003, 3.432295e-003, 1.777415e-003, 2.194852e-002, -1.537160e-002, -1.915873e-002, -1.964198e-002, -1.016747e-001, -5.974856e-002, 3.724868e-002, 3.217882e-002, -6.376596e-002, -4.387464e-002, -2.743918e-003, 5.036837e-003, 7.405765e-002, -4.936361e-002, 9.950965e-003, 4.638390e-002, -2.287984e-002, -3.540936e-002, -1.753393e-002, 2.302351e-002, 3.234914e-002, 4.450098e-002, -2.822022e-003, -2.986547e-002, 1.474685e-002, 1.292398e-002, -3.790439e-002, 5.700175e-002, -4.096342e-002, 4.133207e-002, 1.835678e-002, 1.180496e-002, -3.009855e-002, 2.762214e-002, 9.369550e-003, -6.943300e-002, 1.514672e-002, -5.552062e-003, 1.916866e-002, 1.673653e-003, 1.202660e-003, 3.799024e-002, 1.520229e-002, -2.936105e-003, 3.444647e-002, 1.275772e-002, 2.739513e-003, -1.662192e-002, -2.041199e-002, 2.922311e-002, -8.231434e-002, 8.913493e-003, -2.158903e-003, 1.140080e-002, 9.073600e-002, -5.141258e-002, 5.008005e-002, -3.264963e-002, 4.452577e-002, -3.190506e-002, 6.013824e-003, -2.475649e-003, 5.269073e-003, 1.391186e-002, 1.462701e-002, 9.667593e-003, -4.683825e-003, 1.129132e-002, 1.801180e-002, -3.779168e-003, 2.375108e-003, 3.761889e-003, -3.973933e-002, -1.325198e-003, -4.516756e-003, -5.206774e-002, -3.844665e-002, -7.317653e-002, 4.673510e-003, 2.752118e-002, -8.609763e-003, 2.533896e-002, -1.109024e-002, -1.245050e-002, 2.271461e-002, -1.781137e-002, 3.814217e-003, 1.772313e-002, -


© ISO/IEC 2004 — All rights reserved

Copyright International Organization for Standardization
Provided by IHS under license with ISO
No reproduction or networking permitted without license from IHS
Not for Resale

9.928400e-003, -1.765541e-002, 6.208245e-003, 1.698254e-002, -8.861209e-003, 1.300281e-002, -5.647675e-003, -1.593469e-002, 2.944434e-002, -4.787938e-002, 3.482943e-003, 3.013055e-002, 1.083296e-001, -1.918573e-002, -2.829761e-002, 3.285502e-002, -1.845664e-003, 6.676902e-003, 9.141619e-003, -1.808317e-002, 3.971466e-003, 9.408461e-003, 1.141150e-002, -5.314208e-003, -1.215280e-002, -1.421605e-002, 6.015653e-003, 2.608725e-002, -9.333610e-003, 1.086935e-002, -7.046833e-003, -5.869899e-002, 2.579497e-002, -3.736116e-002, -5.984735e-002, 3.849073e-002, -4.992568e-002, 6.260495e-003, 3.347086e-003, 3.119207e-002, 3.162732e-003, -3.451333e-003, -6.621794e-004, 8.499422e-003, 4.459460e-004, -1.296102e-002, 3.641987e-003, 4.769082e-003, -5.423012e-003, 5.239258e-004, -4.705000e-003, 1.363791e-002, -3.294923e-003, -1.242313e-002, -1.879777e-002, -8.519525e-003, 1.404792e-002, -3.033252e-002, -6.777051e-017, -1.055658e-003, -5.105790e-003, -2.031700e-002, 3.308814e-002, 7.723195e-004, -7.194607e-003, -2.654418e-002, 1.720035e-002, -6.771269e-003, 2.837186e-002, -1.834698e-002, 1.834698e-002, -2.837186e-002, 6.771269e-003, -1.720035e-002, 2.654418e-002, 7.194607e-003, -7.723195e-004, -3.308814e-002, 2.031700e-002, 5.105790e-003, 1.055658e-003, 5.128445e-003, -2.233708e-002, 4.299671e-002, -3.067549e-002, 2.829847e-002, -2.204725e-002, -3.168569e-002, 2.921812e-002, -6.786030e-002, -1.810964e-002, 4.243208e-002, 4.222118e-002, 1.122655e-002, 1.253587e-003, -6.049575e-002, -3.543835e-003, 3.774849e-002, 6.072975e-002, 3.943894e-002, -7.301373e-002, 1.245994e-001, 3.214713e-004, 1.245174e-002, 1.620530e-003, 2.893562e-002, 1.960522e-002, -4.472122e-002, 8.023286e-002, 3.758349e-003, 8.755862e-002, -1.151621e-002, -4.540737e-002, -4.993442e-002, -7.238931e-002, -7.708315e-002, -1.608319e-002, -2.783609e-002, -1.510775e-003, -7.771560e-003, 1.710581e-002, 5.425964e-002, -4.326009e-002, 1.080638e-001, -1.963259e-002, -8.631830e-002, -5.785430e-002, -1.426294e-001, -1.259393e-001, 6.743752e-002, -2.558187e-002, -1.414822e-002, -2.001292e-002, -1.688441e-003, 2.049565e-002, 9.599532e-003, -4.690310e-003, -4.800158e-002, -3.049969e-002, 1.801631e-002, 7.289559e-002, 6.376904e-002, -6.114348e-004, 6.375017e-003, 3.252899e-003, 3.483328e-002, -9.641344e-002, -1.358254e-002, 5.969534e-002, -7.152088e-002, 2.587475e-002, -9.747578e-002, -8.234604e-002, -1.432077e-002, -2.468114e-002, 1.042535e-002, 9.779896e-003, -1.486668e-003, 3.367578e-002, 3.067751e-002, -1.210922e-003, 2.940770e-002, -2.349084e-002, -5.923029e-002, 5.070939e-003, 2.589422e-002, -1.555784e-002, 9.550842e-002, 7.313488e-002, -9.854889e-003, 7.367196e-002, -1.446958e-002, 1.490071e-001, 1.041215e-001, 1.183298e-001, 4.479483e-003, 1.508608e-001, 2.125732e-003, -1.081273e-002, 1.134349e-002, 7.573984e-003, 5.788822e-003, -2.739535e-002, -1.095621e-002, 1.923945e-003, -2.223558e-002, -5.717871e-002, -6.793357e-002, -3.877378e-002, 3.810730e-002, -8.480148e-002, -2.629086e-003, -6.932022e-002, -2.217506e-002, -1.396146e-001, -1.065202e-001, 5.924024e-002, 5.887711e-002, 9.506208e-003, -9.641382e-002, -2.766046e-002, 2.650399e-002, 1.297716e-002, 1.939230e-002, -1.684370e-002, -5.404803e-003, -2.147574e-002, -8.870154e-003, 4.597275e-002, 2.059782e-002, -9.512892e-003, -2.565518e-003, -3.422598e-002, 2.143854e-002, 2.184034e-002, 8.241334e-002, -3.288614e-002, 7.583624e-002, -2.996721e-002, 1.482495e-001, 7.728548e-002, -3.045803e-002, 1.575344e-003, 2.788893e-002, 9.740414e-003, -1.822083e-002, -1.485263e-002, -1.732511e-002, -2.027359e-002, 2.355572e-002, 3.453780e-002, -7.575575e-003, 2.497802e-002, 1.767259e-002, 6.126616e-003, -7.132121e-003, -5.244123e-002, 9.169721e-003, 3.137136e-002, -3.043427e-002, -3.587886e-002, 5.398941e-002, -1.354170e-002, -3.650377e-002, -3.984453e-002, -4.082219e-003, -4.412932e-002, -9.821027e-003, 7.162870e-002, -4.136955e-003, 1.313133e-003, 1.416805e-003, 1.231048e-002, 1.035661e-002, -2.157896e-002, -5.202775e-003, 3.457767e-002, 3.176750e-002, 1.453365e-003, 4.833021e-002, -2.067493e-002, 1.024872e-002, 4.263818e-002, -1.457812e-002, 6.167683e-002, -2.090603e-003, -5.338684e-003, -2.198871e-003, -5.641746e-002, 1.860618e-002, 4.089837e-002, 4.767199e-003, -1.911112e-002, -2.459765e-002, -5.119790e-003, 2.358307e-003, -1.068538e-002, -1.284063e-002, -5.859106e-003, 1.360207e-002, 8.103448e-003, -6.577781e-003, 6.435269e-003, -5.831935e-003, 1.331375e-002, 1.257929e-002, 2.038468e-002, 3.143784e-002, -2.974381e-002, 1.283795e-002, -1.078307e-002, 7.224560e-003, -2.688872e-002, 9.003486e-003, -7.591947e-003, 1.786648e-002, 1.910751e-002, -3.512030e-003, 6.420383e-004, -3.913648e-003, -8.211259e-003, -1.251631e-002, -1.260395e-003, 2.291537e-002, 1.136234e-002, 1.260346e-003, 2.664584e-002, -4.888437e-002, 4.483322e-002, -2.661811e-002, 5.600577e-002, 5.698774e-002, -4.001146e-002, 5.047641e-002, -3.185456e-002, -5.980934e-003, 5.352898e-003, 1.736289e-002, -5.592648e-003, 8.839307e-004, 1.890061e-002, 1.560452e-003, -8.435995e-003, -1.736367e-003, -2.213494e-002, 5.202280e-003, -9.821051e-003, -1.539557e-002, 2.181222e-002, 2.587193e-002, 1.326296e-002, -3.023082e-002, 5.785561e-002, -6.030569e-002, 6.566687e-002, 6.691770e-003, -4.314598e-002, 5.562236e-002, -4.113417e-003, 3.694229e-003, -1.454096e-002, 7.261732e-004, 3.388517e-003, 9.748811e-004, -8.274775e-003, 1.504855e-003, 4.292992e-004, 2.515198e-003, -1.227980e-002, 1.173455e-002, -2.745250e-004, -6.318763e-004, 6.282307e-004, -1.575660e-002, 4.510446e-002, -2.686050e-002, -4.135222e-002, -6.232637e-002, 2.442710e-002, 4.135637e-002, -2.575715e-002, 1.746449e-002, -9.959308e-003, -1.228730e-002, 6.266414e-003, -6.420163e-004, -1.195637e-003, 3.384716e-003, 5.385034e-005, 3.384393e-003, -5.567544e-003, 4.808381e-003, -9.331057e-004, 1.635809e-002, 2.373900e-003, 1.144214e-002, 1.429116e-002, -5.949682e-002, 3.129489e-002, 4.112552e-002},

© ISO/IEC 2004 — All rights reserved


Copyright International Organization for Standardization
Provided by IHS under license with ISO
No reproduction or networking permitted without license from IHS
Not for Resale

{3.242076e-003, -6.656534e-003, 2.151929e-002, 7.074468e-003, -2.605583e-002, 6.550182e-002, -2.172007e-002, -1.793760e-002, 5.354701e-002, -1.697670e-002, -1.258560e-003, -2.066178e-002, -2.066178e-002, -1.258560e-003, -1.697670e-002, 5.354701e-002, -1.793760e-002, -2.172007e-002, 6.550182e-002, -2.605583e-002, 7.074468e-003, 2.151929e-002, -6.656534e-003, 9.258066e-003, 3.289669e-002, 2.197532e-002, 1.127207e-001, -7.314726e-002, 3.938200e-002, 1.932321e-002, 4.157445e-002, -1.249226e-002, 2.249243e-002, 7.224375e-003, 5.530312e-003, 1.021443e-002, 4.904133e-003, 7.704476e-003, -3.545729e-003, 4.467129e-002, 2.139026e-002, -8.372397e-002, 5.110651e-002, 4.138790e-002, -5.744753e-002, 2.139381e-003, -4.540075e-003, -3.141003e-002, -9.098141e-002, 1.289460e-004, 2.019587e-002, -2.582710e-002, -8.598854e-002, -5.268978e-003, -1.281860e-002, -2.385703e-002, 1.606655e-002, -9.753934e-003, 3.090137e-002, 5.702168e-002, 2.500452e-002, 7.263528e-002, 5.426649e-003, -1.168329e-001, 1.046670e-001, 5.950677e-003, -2.496612e-002, 3.969815e-002, 4.232801e-002, 2.893105e-003, 4.460909e-002, 8.218646e-003, -3.216167e-002, 5.007780e-002, 5.046988e-003, 2.162522e-002, 1.885477e-002, -2.893382e-002, 4.571888e-003, 4.054874e-002, 5.685682e-003, 2.384619e-002, 2.474534e-002, 2.331665e-002, 2.145740e-002, 3.069930e-002, 1.530215e-001, 3.616559e-002, 1.530828e-002, 7.573199e-002, 5.045144e-002, 3.851023e-002, -8.354875e-002, -8.884438e-002, 1.303062e-001, -3.584461e-002, 2.704333e-002, -8.651319e-002, 4.266090e-002, -2.342765e-002, -7.104491e-002, -1.665356e-002, -1.214951e-002, -2.158800e-002, -3.800745e-002, 2.754971e-002, 2.515586e-002, -2.476056e-002, 1.359888e-002, -1.199135e-003, -2.714913e-002, 2.241452e-002, -1.999013e-002, 3.650394e-002, 2.115658e-002, 1.110510e-002, -1.012733e-001, -8.339580e-002, 3.046802e-002, -7.443334e-002, -2.169613e-002, -5.302288e-002, -2.873565e-002, 9.700937e-003, 2.779658e-002, 5.788146e-002, 2.489546e-002, -3.427106e-003, -2.481781e-003, 2.351497e-002, -1.013946e-002, 1.977288e-002, 2.345750e-002, -2.118523e-002, 2.708340e-002, 1.208628e-001, -8.508509e-002, 8.137028e-002, 8.284053e-003, 2.176613e-002, -4.650293e-002, 4.538540e-002, -1.935223e-002, -1.339139e-002, 8.654588e-002, 6.547919e-003, -2.461059e-002, -1.551215e-002, -3.841198e-002, 8.846737e-003, 2.541673e-002, 1.255475e-002, -7.291445e-003, -5.627854e-002, -5.451526e-002, 6.968617e-002, -4.751766e-002, -2.123926e-002, -7.891557e-003, -6.348081e-002, -1.790604e-002, 6.030094e-002, -4.512512e-002, -5.977297e-003, 8.234420e-002, 3.506726e-003, 5.600186e-002, -9.542255e-002, -2.852398e-002, -1.152233e-002, -2.018267e-002, -1.077388e-004, -1.120956e-002, -5.161441e-003, 2.015817e-002, 3.519384e-002, 6.314247e-002, 4.969846e-003, -8.888919e-002, 4.053318e-002, -4.408985e-003, 1.708900e-003, -6.195936e-002, -3.079735e-002, -1.791877e-001, 2.481957e-002, 3.094195e-003, -2.119385e-002, -1.667279e-002, -1.643250e-002, 9.552655e-004, -1.374040e-002, 1.616614e-002, -9.582293e-003, -1.059129e-002, 8.313049e-003, -1.559272e-002, -2.649451e-002, 2.543440e-002, 3.005394e-002, 6.748777e-003, 2.588540e-002, -4.326451e-002, 3.046570e-002, 1.820365e-002, -3.829428e-002, 9.578420e-002, 7.428032e-002, 1.660208e-002, -2.519435e-002, -1.843026e-002, 6.227156e-002, -2.898477e-003, 1.199018e-002, 1.808661e-002, -2.261765e-002, -2.242489e-002, -1.018599e-002, -1.582040e-002, -4.528903e-003, -3.672087e-003, -1.230540e-002, 1.169793e-004, 1.899092e-002, -1.631800e-002, -5.141351e-002, 7.291178e-002, 1.302988e-002, -4.192326e-002, -4.475736e-002, 9.277115e-002, -4.687962e-002, -2.235541e-002, 3.485205e-002, -3.461828e-002, -5.812669e-003, -1.187260e-002, -6.857334e-003, 8.004357e-003, -2.158378e-002, -1.496359e-002, -9.349879e-004, 4.479935e-003, 1.133988e-003, 1.873676e-002, 2.576993e-002, -1.254866e-002, -1.493408e-002, 1.985831e-002, -5.233185e-002, 5.270233e-002, 1.095324e-002, -3.735599e-002, -1.416068e-002, -3.945184e-002, 5.543235e-002, -9.606087e-003, -1.557556e-002, -1.935354e-003, 4.073520e-002, 6.623461e-003, 5.475512e-003, -6.115479e-003, -8.303530e-003, 6.897001e-003, 7.441708e-003, 7.615095e-003, 3.939241e-003, 6.661109e-003, -2.986285e-002, 6.706468e-003, -3.075135e-003, -2.069516e-002, 1.550902e-002, 1.634723e-002, -1.124014e-002, 1.225111e-002, -1.685057e-002, -4.905893e-003, 1.007536e-002, 1.272871e-002, 2.444113e-002, 2.209658e-004, 1.009545e-003, -5.580697e-003, -5.469912e-003, 3.589606e-003, -3.874679e-003, -3.082373e-003, 2.101712e-003, 2.458234e-002, 4.409668e-003, -3.170437e-003, -2.538725e-002, -2.758199e-002, 1.458845e-002, 2.134006e-003, 7.077589e-003, -2.485961e-002, -9.488721e-003, -2.115393e-002, -1.614899e-004, 1.190838e-002, -2.095366e-002, 1.530609e-002, 1.101889e-003, 1.284612e-002, 5.004312e-003, -5.391101e-003, -2.727256e-003, -1.070150e-003, -1.539913e-003, -3.946016e-003, 2.071069e-003, 1.335443e-002, 1.115509e-003, -1.471973e-002, 1.012605e-002, -8.845566e-003, 2.472565e-002, 1.222091e-002, -3.729070e-002, -2.203950e-017, -1.000266e-002, 1.897976e-004, 2.961769e-002, -5.625051e-002, 2.274529e-002, -1.579069e-002, 4.589091e-002, 7.427994e-003, 1.427105e-002, 5.443329e-003, 4.466466e-002, -4.466466e-002, -5.443329e-003, -1.427105e-002, -7.427994e-003, -4.589091e-002, 1.579069e-002, -2.274529e-002, 5.625051e-002, -2.961769e-002, -1.897976e-004, 1.000266e-002, 9.211539e-003, -3.852106e-002, 3.083991e-002, -3.815314e-004, -5.366535e-003, -2.423490e-002, 2.973926e-003, -8.657524e-003, -1.881333e-003, 2.879748e-002, 1.881783e-002, 4.607693e-003, -2.285125e-003, -1.526957e-003, -9.658630e-003, -6.368045e-002, -2.681335e-002, 5.350062e-002, -1.786480e-002, 4.802988e-002, -3.812876e-002, 7.867760e-002, 8.910808e-003, 1.637446e-002, -1.330526e-002, 2.667279e-002, -1.375252e-001, 5.478182e-002, -4.062732e-002, -1.970688e-003, -6.029214e-002, -1.825187e-002, -5.515141e-002, -6.909443e-002, -4.968175e-002, -5.778373e-003, -1.358966e-002, -2.424960e-002, 2.893329e-002,


© ISO/IEC 2004 — All rights reserved

Copyright International Organization for Standardization
Provided by IHS under license with ISO
No reproduction or networking permitted without license from IHS
Not for Resale

3.176569e-002, -4.381070e-002, -1.631899e-002, 8.132320e-002, -1.739485e-002, -1.421716e-003, 1.180318e-002, -6.641124e-002, -1.638723e-002, -1.297429e-002, 1.546763e-001, -9.740382e-002, 1.179607e-002, 1.108219e-001, -8.971310e-003, -1.252111e-002, 6.425148e-003, 3.269627e-002, 2.471330e-002, 4.207617e-002, -2.621283e-002, -6.929477e-002, -7.035433e-002, -6.035561e-002, 3.394140e-002, -1.141334e-002, -8.074925e-002, 9.171854e-002, 3.679595e-003, -3.722366e-002, 6.433308e-003, -1.437239e-002, -2.721484e-002, 1.832074e-001, -6.550185e-002, 6.630924e-002, -6.115327e-002, 3.601576e-002, 1.204275e-001, 7.479504e-002, 3.590428e-002, -2.893555e-002, 1.090611e-002, 5.094641e-002, 3.285460e-002, 3.540085e-002, -1.081160e-003, -1.181578e-001, 8.948998e-002, -3.676310e-002, 4.774436e-003, -4.859273e-002, -3.829081e-002, -1.162488e-002, 7.569375e-002, -6.100315e-002, -3.897867e-002, 2.657012e-003, 5.440580e-002, 1.327012e-002, -1.798444e-002, -7.589590e-002, -3.780861e-002, -1.354945e-002, 4.597010e-003, 1.551213e-002, 5.009973e-002, 5.648518e-002, 4.963099e-002, 5.112815e-002, 6.841580e-002, 6.278605e-002, -1.205494e-003, 2.821156e-002, -2.748693e-002, -4.227252e-002, -6.087163e-002, 6.919019e-002, 5.323064e-002, -2.590083e-002, 1.014191e-001, -1.525133e-003, -4.696796e-002, -2.923607e-002, -1.311552e-002, 2.752523e-002, 5.232001e-002, 8.918799e-003, -2.444459e-002, -2.338021e-003, -1.002836e-002, -5.649788e-002, 3.076059e-002, 4.233527e-002, 1.124668e-002, 1.027450e-001, 1.330339e-002, 2.289694e-002, -1.628239e-002, -3.423617e-002, 5.936118e-002, 2.530375e-002, 4.981335e-002, -3.029333e-002, -6.809477e-002, -2.422247e-002, 5.504776e-003, 1.847652e-002, 2.149233e-002, -2.208388e-002, -1.750806e-002, -3.029133e-003, 3.382228e-002, 9.438551e-003, -2.676348e-002, -2.367216e-002, -7.538468e-003, -1.828363e-002, -1.475328e-002, -2.904097e-003, 7.559574e-002, 4.526212e-002, 9.697098e-002, -2.801633e-002, 4.181942e-002, 2.044943e-002, -5.603690e-002, 8.653414e-003, -2.177674e-002, -6.335076e-003, -3.062769e-003, -3.292637e-002, 4.223346e-003, 2.468012e-003, -1.560829e-002, -1.588978e-002, -7.504439e-003, 1.240230e-002, -6.325809e-003, 3.366572e-002, 4.523534e-002, -6.014201e-002, -1.209152e-003, 4.629235e-002, -1.316684e-001, 9.962642e-002, -7.231067e-003, 4.780384e-003, -3.393639e-002, 6.903445e-002, -3.276832e-002, -3.644626e-002, 1.599170e-002, -1.595619e-002, 1.104446e-002, -3.834409e-003, 2.099930e-002, -2.434045e-002, -2.127572e-002, 2.475169e-002, -1.682952e-003, 3.555808e-002, -2.198098e-002, -4.186226e-002, 1.031096e-001, -6.073261e-002, 7.738753e-003, -1.981594e-002, -2.898157e-002, 1.580682e-002, 1.088534e-002, -1.996703e-003, -4.247451e-002, 4.237117e-003, 7.737880e-003, 1.581811e-002, -3.022148e-002, -2.818737e-002, 8.479619e-003, -1.172037e-003, 8.920268e-003, -3.690383e-003, -2.593021e-002, 6.021072e-003, 5.580111e-003, 3.361134e-003, -2.017612e-004, -1.472624e-004, -1.849831e-002, 9.818147e-003, 5.033016e-002, 6.921357e-002, 2.952968e-002, -2.293793e-002, -8.264837e-003, -6.582390e-004, 2.506893e-004, -1.279480e-003, -2.185083e-002, -1.195037e-002, -1.665917e-002, -6.217347e-004, 7.846117e-003, 5.536315e-003, -4.583798e-004, 1.693027e-003, 9.108786e-003, 1.500528e-002, 1.222773e-002, -5.885623e-003, 1.195635e-002, 2.403949e-002, -4.604137e-002, 3.315955e-002, 2.922048e-002, 3.539479e-002, -1.787618e-002, -1.941765e-002, 2.249544e-002, -1.810271e-002, 1.533783e-003, -1.338054e-003, -1.790229e-002, 1.226448e-003, -6.283222e-003, -2.111172e-003, -1.198648e-002, 3.864924e-004, 6.816252e-003, -2.476869e-003, 5.782481e-003, 1.392627e-002, -3.517211e-002, 3.614735e-003, 1.336210e-002, -7.771964e-003, 2.633644e-002, -1.813510e-002, 1.777501e-002, 4.537208e-003, 5.797739e-003, -1.147774e-002, 2.340264e-002, -2.158494e-003, 1.552241e-002, -1.293647e-002, -1.784622e-002, 9.630165e-003, 2.575739e-003, 3.551826e-003, 2.580638e-003, -8.004323e-003, 8.946717e-003, -2.858118e-003, 5.140369e-003, -4.203127e-003, -4.944925e-003, 6.065041e-004, -7.924328e-003, 4.545504e-002},

{-5.650878e-004, -2.543329e-003, 1.061275e-002, -2.542668e-004, 5.110807e-003, 7.678630e-003, 1.813754e-002, -2.752792e-002, -1.035679e-002, -1.527767e-002, -6.329920e-003, -2.573220e-002, -2.573220e-002, -6.329920e-003, -1.527767e-002, -1.035679e-002, -2.752792e-002, 1.813754e-002, 7.678630e-003, 5.110807e-003, -2.542668e-004, 1.061275e-002, -2.543329e-003, 3.776578e-003, 3.366226e-002, -5.124370e-002, 4.599758e-002, 1.571050e-002, 5.015727e-002, -2.928446e-002, -3.929136e-003, 9.867900e-003, 3.745308e-002, -2.418402e-002, 3.506154e-003, 9.333279e-003, 3.194126e-002, 5.879283e-002, 3.552804e-002, -3.375895e-002, -2.718897e-003, 8.104275e-002, -6.386243e-002, 5.229182e-002, -2.500193e-002, -2.298264e-002, -8.322216e-003, -2.183556e-002, -7.959152e-002, -1.452589e-001, 4.745842e-002, -4.234614e-002, -3.325587e-002, 2.689504e-002, -6.943053e-002, -6.599183e-002, 7.182441e-002, 4.058834e-002, 2.046293e-002, -3.111401e-002, -5.702564e-002, -1.978647e-002, 2.688251e-002, -4.701703e-002, 1.226494e-001, -7.137188e-002, -3.933980e-004, -4.290683e-002, 3.342694e-002, -3.448716e-002, -1.921567e-003, 7.930436e-002, -7.653882e-002, 7.986312e-002, -1.582089e-001, 6.108846e-002, 1.967962e-002, -1.993086e-002, 1.822440e-002, -4.999063e-002, -2.975580e-002, 2.136311e-002, 5.213663e-004, -4.015217e-002, 2.857593e-002, 3.291133e-003, 2.699680e-002, -7.148414e-002, -6.390082e-004, -8.011833e-006, 5.266422e-002, -9.056071e-003, -2.373653e-002, -5.360114e-002, -1.066130e-001, -7.437289e-003, -1.401999e-002, 1.875279e-002, 9.469378e-003, -6.891396e-002, 1.038152e-002, 5.383150e-002, 1.985530e-002, -5.007526e-003, 4.434015e-003, 4.547532e-004, -8.144911e-003, -8.421392e-002, -3.812032e-002, -6.940684e-002, 1.785851e-002, 1.181275e-001, -3.672886e-002, -1.304621e-001, -2.117013e-002, 1.890834e-002, 6.286785e-002, -6.513279e-002, -2.774501e-002, -7.611183e-002,

© ISO/IEC 2004 — All rights reserved


--`,,```,,,,````-`-`,,`,,`,`,,`---

Copyright International Organization for Standardization
Provided by IHS under license with ISO
No reproduction or networking permitted without license from IHS
Not for Resale

9.886273e-002, 9.366264e-003, -2.080085e-002, 5.192510e-002, 5.294395e-003, -4.964230e-002, -2.948794e-002, -3.084381e-002, 6.135739e-003, -3.138499e-002, 3.124696e-002, 1.022372e-002, -9.732818e-003, -1.274493e-004, -5.191312e-002, -5.435836e-002, 4.029593e-002, -6.707191e-002, 2.507626e-002, 4.923422e-003, -5.479215e-002, 1.241642e-002, -2.263546e-002, 8.489807e-003, 1.593106e-002, -5.603747e-002, -3.387156e-002, -2.047640e-002, -5.362110e-003, 2.262385e-002, 1.312207e-002, 1.501089e-002, 4.129614e-002, -2.915814e-002, -2.730189e-002, -2.628743e-002, -3.515270e-002, 2.824970e-002, -4.800155e-002, -8.118958e-003, 1.014229e-001, 8.067538e-002, -2.631475e-004, 1.127208e-001, -9.006481e-002, 8.798652e-003, 3.916519e-002, -3.079996e-002, 5.482243e-002, 3.397281e-002, 7.870345e-003, 1.064781e-002, 7.614245e-003, -8.268509e-003, -2.040706e-002, -2.506571e-002, 1.725800e-002, 5.862321e-002, 4.570011e-002, -2.138459e-002, -2.179685e-002, -7.792396e-002, -1.081276e-001, -1.545025e-002, -3.427031e-002, 1.684280e-003, -1.508581e-002, 6.448740e-003, -5.107200e-002, 3.321475e-002, 5.346615e-002, 2.589499e-002, 1.883313e-002, -3.546042e-002, -6.610185e-003, 2.034464e-003, -1.066974e-002, 6.615916e-004, -5.508170e-003, -1.584943e-002, -1.561191e-002, 8.507713e-003, 5.835262e-002, -2.722474e-002, -2.519406e-002, 2.101534e-002, 1.689142e-002, -6.016975e-005, 6.436054e-002, -3.756241e-002, 5.202913e-003, 2.451647e-002, 6.728006e-003, 7.263752e-002, 3.091642e-003, -3.831705e-002, -8.723346e-003, -8.520735e-003, 1.141563e-002, -2.973573e-003, -1.547095e-002, 1.099038e-002, 1.012982e-002, -3.255548e-002, -1.173420e-002, 2.634787e-002, 4.496869e-002, -1.140176e-002, -7.909426e-002, 1.357348e-002, 2.366095e-002, 4.064212e-002, 4.652885e-002, -3.303811e-002, -8.574195e-003, 2.625819e-002, -2.156557e-002, 1.195070e-002, 1.664783e-003, -1.384400e-002, 1.842886e-002, -2.831070e-003, -9.180270e-003, -1.214583e-002, -3.787571e-003, 9.972412e-003, 2.835403e-002, -1.688430e-002, 4.136696e-002, 1.251975e-002, -3.042503e-002, -2.739406e-002, -5.853681e-003, -8.029427e-002, 5.510482e-002, 3.630373e-003, 1.711162e-002, -4.265803e-003, 9.981122e-003, 2.112169e-002, -2.219829e-002, 2.518499e-003, 1.982680e-002, -4.669445e-003, -1.904914e-003, -7.922483e-003, -5.501617e-003, 2.601609e-003, 3.057287e-002, -2.757975e-002, -1.474359e-003, 3.289432e-002, 1.971799e-002, -4.505317e-002, -2.360458e-002, 4.209066e-002, 1.748877e-002, 2.531861e-002, -2.191411e-002, 2.362714e-002, 4.018249e-002, 7.531852e-003, -2.381080e-004, -2.062857e-003, 1.575278e-002, 3.259719e-003, 1.485723e-002, -2.682926e-003, 1.283744e-002, -3.213937e-003, -9.225660e-003, 9.767506e-004, 4.580718e-002, -8.142699e-003, -1.167790e-002, 2.607611e-002, 5.020528e-004, -6.048840e-002, -3.429764e-002, -3.597206e-002, 6.549121e-003, 2.410646e-002, 4.858044e-003, 1.289502e-002, 1.104441e-002, -2.904799e-002, -7.078730e-003, 1.058509e-002, 1.622278e-002, 5.064643e-003, 6.993416e-004, -2.994692e-003, 6.423408e-003, -4.139836e-003, -1.627284e-003, 9.742136e-003, 1.211340e-003, 1.016241e-002, -7.482715e-004, -3.411310e-002, -1.179060e-002, 1.193695e-002, -1.016994e-016, 1.514634e-002, -2.322797e-002, 2.435696e-003, 3.635028e-002, -3.207784e-002, -1.647760e-002, 1.145537e-002, -1.683412e-002, -1.812042e-002, 1.630755e-002, -1.187979e-002, 1.187979e-002, -1.630755e-002, 1.812042e-002, 1.683412e-002, -1.145537e-002, 1.647760e-002, 3.207784e-002, -3.635028e-002, -2.435696e-003, 2.322797e-002, -1.514634e-002, -1.124944e-002, 3.210197e-002, 2.765842e-003, -2.922682e-002, 5.168002e-003, 8.800804e-002, -4.355688e-002, -3.222855e-002, 2.781342e-002, 3.969972e-002, -1.779713e-002, -6.878626e-003, -7.547563e-002, -1.962424e-002, 2.418532e-002, 1.267770e-002, -4.293848e-002, 4.733211e-002, 7.980287e-003, -1.048382e-001, 7.302633e-002, 2.026551e-002, -1.559434e-002, 1.853897e-002, 4.875305e-003, 1.232707e-002, 6.179780e-004, -2.911779e-003, -3.883042e-002, -6.555719e-002, 9.430688e-003, 3.510372e-002, 9.308392e-003, 4.467905e-002, 3.069285e-002, 4.012076e-002, 1.266474e-002, 8.890117e-003, 2.377880e-002, 5.629387e-002, -8.540227e-002, -5.008477e-002, -3.317769e-002, 1.440613e-002, -8.639262e-002, -1.118663e-001, 7.137015e-003, 8.737511e-002, -3.914600e-002, 1.428735e-001, -2.673337e-002, 1.351442e-002, 2.946717e-002, -7.348536e-002, -6.739663e-002, -3.297110e-002, -2.441425e-002, -2.604177e-002, -2.605723e-002, -9.589301e-003, -1.495041e-002, 1.035357e-002, 6.183559e-003, 2.996605e-003, 4.226705e-002, -3.706842e-002, -2.398944e-002, 4.704005e-002, 2.538081e-002, -6.771633e-002, 1.422281e-001, -4.442155e-002, 2.443156e-002, -1.759243e-002, 3.662350e-002, -6.980836e-002, 5.914924e-002, 2.615490e-003, -3.896230e-002, -3.194388e-002, -1.027214e-002, 1.122405e-002, -3.698288e-002, -3.805548e-002, -2.185572e-002, 2.489496e-002, -1.560187e-003, -6.476606e-002, 3.795501e-003, 7.160347e-003, -1.110104e-001, -1.412561e-001, 7.075126e-002, 1.198752e-002, 3.083834e-002, 1.177496e-004, -1.894776e-002, -8.261782e-002, -3.590507e-002, -1.852199e-002, 3.517696e-002, -1.703900e-003, 3.039885e-002, 4.267088e-002, 4.699885e-002, 2.924593e-002, 4.500911e-003, 2.192276e-002, 3.379065e-002, 4.423718e-003, -3.715124e-002, -6.203443e-002, 1.842743e-002, 1.724845e-002, 8.978487e-002, 8.175459e-002, -5.040616e-002, 8.562045e-002, -2.012905e-001, 1.045465e-001, 1.853445e-002, -3.440095e-002, 7.982568e-003, -1.467253e-002, 2.767823e-002, 6.919874e-003, 4.950516e-003, -5.799586e-003, -2.440998e-002, -1.629162e-002, -5.841334e-002, -3.574590e-002, -1.808075e-002, -2.213084e-002, 1.120893e-001, -3.456689e-002, 9.381160e-002, 7.295516e-002, -7.370797e-002, 5.449214e-002, -1.160569e-001, 6.122210e-002, -2.094790e-002, 1.401068e-003, 5.844502e-005, 1.815713e-002, 4.452394e-003, -3.182050e-002, 2.998127e-004, 3.822691e-003, 6.991648e-003, 5.815677e-002, -1.827924e-002, 2.513067e-002, 3.292631e-002, -3.925897e-003, -1.371042e-003, -1.145903e-001, 4.852927e-002, -


© ISO/IEC 2004 — All rights reserved

Copyright International Organization for Standardization
Provided by IHS under license with ISO
No reproduction or networking permitted without license from IHS
Not for Resale

4.679956e-003, -1.181616e-002, -6.613930e-002, 6.511908e-002, 3.173361e-002, -2.117833e-002, 4.949956e-002, -2.654933e-002, 4.102097e-002, -1.695770e-002, -5.586093e-002, 1.250998e-002, 2.294919e-002, 1.292339e-002, 9.352628e-003, -3.238343e-002, 2.412326e-002, -2.384802e-002, -1.151446e-002, 2.904003e-002, -3.481078e-002, 3.495096e-002, -1.202186e-001, 5.783071e-002, 4.933226e-002, 2.864180e-002, 5.997240e-003, 1.968103e-002, -1.652440e-003, 4.057253e-003, 5.462951e-002, -1.292901e-002, -3.519608e-002, -3.722885e-002, -1.932928e-002, -2.290999e-003, -1.963335e-003, -4.511507e-003, 1.482861e-002, -5.302560e-002, -1.554334e-002, 6.018544e-003, -3.605558e-002, -2.881942e-002, 1.385882e-002, 8.800498e-003, -2.261308e-002, 6.181366e-003, -1.696717e-002, 4.622163e-003, 2.310471e-002, -5.397075e-003, -1.785309e-002, 2.236349e-002, -1.602600e-002, -3.712392e-002, -1.851668e-002, 1.495143e-002, 3.225049e-003, -1.118153e-002, 1.395420e-002, -1.494819e-002, 4.707027e-003, -1.328783e-002, -1.645498e-002, -3.103459e-002, 2.718335e-002, -3.414718e-003, -4.362268e-002, 5.741080e-002, 1.556049e-002, 7.364916e-002, 3.323550e-002, -9.997086e-003, -4.472898e-003, 1.806832e-002, -3.549838e-002, 5.785416e-003, -6.429931e-003, 1.301972e-002, 1.083113e-002, -9.733833e-003, -5.655375e-003, 3.267711e-003, -2.588249e-003, -2.764978e-002, -2.206373e-003, -1.459589e-002, 1.526456e-002, -3.124880e-002, 4.469232e-002, 2.876585e-002, -5.022020e-002, -2.405003e-002, 3.608548e-002, 3.351693e-003, 3.314538e-002, -1.513221e-002, 9.449355e-003, -1.599970e-002, -2.023389e-002, 1.870286e-002, 2.761058e-003, -8.459812e-004, -1.289911e-002, -1.743854e-003, 7.925440e-003, 1.691190e-002, -5.998801e-003, -2.884578e-002, 6.925504e-003, 3.899819e-003, -1.389247e-002, 1.561030e-002, 2.015186e-002, 1.161770e-002, -2.008577e-002, -6.816106e-003, 4.188978e-003, 4.836544e-002, 1.572530e-002, -9.848637e-003, -1.432965e-003, -4.759147e-003, 7.900225e-003, 1.754154e-002, 2.472685e-003, 3.716544e-003, -4.292138e-004, -6.920495e-003, -3.855327e-003, -2.235344e-003, 2.726480e-004, -1.954820e-003, -7.322285e-003, 1.532938e-002, -7.270063e-003, -1.949091e-002, 1.479614e-002, 9.724202e-004},

{-1.540969e-003, 7.880889e-003, -3.859165e-002, 4.942587e-002, -6.134689e-002, 5.252591e-002, 4.769042e-003, -2.485840e-002, -2.400179e-002, 4.830503e-002, 2.046630e-003, -3.798910e-002, -3.798910e-002, 2.046630e-003, 4.830503e-002, -2.400179e-002, -2.485840e-002, 4.769042e-003, 5.252591e-002, -6.134689e-002, 4.942587e-002, -3.859165e-002, 7.880889e-003, -1.381218e-003, -3.922490e-002, -1.649239e-002, -4.319984e-002, 2.888774e-002, 1.330406e-002, -5.559350e-002, 2.696674e-002, 1.868755e-002, -4.426821e-002, 1.672457e-002, 3.998806e-003, 5.330124e-002, 1.047521e-002, -3.144042e-003, 8.721920e-003, 8.092543e-003, -4.734278e-002, 7.147655e-002, 5.205007e-002, -1.739057e-002, 5.765090e-002, 1.911370e-002, -1.171271e-002, -3.529145e-004, -3.965445e-002, -1.209490e-001, 2.262874e-002, 1.147028e-002, -3.482874e-002, 5.660250e-003, -3.352499e-002, 3.466801e-002, 4.987685e-003, 1.498996e-002, 9.368785e-003, 2.208098e-002, -4.646951e-002, -3.499717e-002, -3.381517e-003, 5.667451e-002, 8.605147e-003, 1.954974e-002, -6.155579e-002, 4.475990e-002, -1.040586e-002, 1.046818e-002, -3.724234e-004, -5.934763e-002, -1.091293e-002, -3.650327e-002, -9.562495e-002, 6.095518e-002, -3.079359e-002, -2.552336e-002, -3.900410e-002, -7.557353e-003, -4.615710e-002, -2.453953e-002, -2.630435e-002, 6.673028e-003, -3.492381e-003, 5.892558e-002, 4.326966e-002, -2.424834e-002, -7.399837e-002, 1.496116e-001, -2.860154e-002, -9.101392e-003, -5.840733e-002, 3.772676e-002, 6.252103e-002, 7.294550e-002, -1.167073e-001, 1.024784e-003, -1.884298e-002, -2.525098e-002, 1.742481e-002, 3.973271e-002, 5.398134e-004, 2.851310e-002, -2.581554e-002, -4.393813e-003, -3.843016e-003, -3.438411e-002, -6.095645e-002, -4.945008e-002, 6.273917e-002, -4.076311e-003, -1.973265e-002, -3.227971e-003, -1.348468e-001, -3.107802e-002, 1.598249e-002, -5.032367e-002, -3.471590e-002, 6.860053e-002, 5.385147e-002, 1.854407e-002, 1.504826e-002, 3.103987e-003, -7.095229e-002, -1.677846e-002, 1.582428e-002, 4.755544e-002, 4.438042e-002, 3.599134e-002, -1.468446e-003, -4.969698e-003, 1.508215e-002, -8.940961e-002, -1.607768e-002, -6.876682e-003, -1.360693e-001, -1.730681e-001, -3.858698e-002, 1.075559e-001, 3.168530e-003, -2.537241e-004, 5.750979e-002, -4.395126e-003, -3.567795e-002, 2.846638e-002, -1.005176e-002, -1.709699e-002, 2.111527e-002, 2.089810e-002, -2.564255e-002, 2.630215e-002, 7.362788e-002, -1.899145e-002, 2.579156e-002, 6.860628e-002, 3.478379e-002, 2.287336e-002, -5.417542e-002, 7.368889e-002, 5.119707e-002, 1.134963e-001, -2.132715e-001, 1.354426e-001, -5.655770e-002, 4.886511e-003, -6.575019e-002, -4.004351e-002, 2.955938e-002, 1.400892e-002, -2.905247e-003, -1.413341e-002, -5.864640e-003, -3.530750e-002, -2.758800e-002, 1.157750e-002, 1.964152e-002, -1.737413e-002, 4.754925e-002, 4.282242e-003, 4.638070e-002, 3.009416e-002, 1.506996e-002, -4.676050e-002, -8.099145e-002, -1.260957e-002, 5.620411e-002, -9.151780e-002, 5.785362e-002, -1.552245e-002, 5.224444e-003, 7.952645e-003, -8.439420e-003, -1.609038e-002, 1.864196e-002, -2.265580e-002, -1.863638e-002, -2.730624e-002, 2.480053e-002, -2.254788e-003, -1.048778e-002, 3.387777e-002, -5.069134e-004, 1.392729e-002, 5.447044e-002, -7.328606e-002, 1.354548e-001, 7.971460e-002, -5.442659e-002, -5.912448e-002, 3.282943e-002, -1.122338e-002, 2.343523e-004, 1.216886e-002, -2.971890e-002, -3.827846e-003, 2.062858e-002, -6.775529e-003, -4.893299e-003, 1.867830e-003, -2.008329e-003, 1.402492e-002, 4.742942e-002, -1.668865e-002, -1.090993e-002, 6.720930e-002, -5.363540e-002, 6.520001e-002, -2.624948e-002, -6.370455e-002, -4.173591e-002, 2.514001e-002, 6.738846e-002, -1.002675e-001, 2.288786e-002, 1.027346e-003, -2.009775e-002, 1.350767e-002, 9.204354e-003, 1.999276e-002, -

© ISO/IEC 2004 — All rights reserved


Copyright International Organization for Standardization
Provided by IHS under license with ISO
No reproduction or networking permitted without license from IHS
Not for Resale

1.412634e-003, -2.474557e-002, 7.611691e-003, -2.545891e-002, 1.178133e-002, 1.898802e-002, -1.620139e-002, -8.395339e-003, -1.177843e-002, 1.292064e-002, -3.480556e-002, 2.141416e-002, 4.376236e-002, -2.674227e-003, 2.582115e-002, -3.375466e-002, 2.965580e-002, -4.487344e-002, 1.714708e-002, 1.360130e-002, -2.032764e-002, 5.061048e-003, -7.366084e-004, -2.120029e-004, 5.763223e-003, 8.754955e-003, 3.833635e-003, -1.392599e-002, 1.923825e-002, 9.425457e-003, 1.569660e-002, 1.243048e-002, -3.637855e-002, 1.627101e-002, -1.724267e-002, 3.693997e-002, -2.799539e-002, 2.831378e-002, -1.582132e-002, -5.101994e-003, 3.873941e-002, 1.391805e-002, -2.060124e-003, -2.280602e-003, 3.508193e-003, 1.180182e-003, -9.794955e-003, -4.690256e-003, 1.043627e-002, -1.523682e-002, 9.789442e-004, 1.618748e-002, 1.653795e-002, -3.605829e-002, -1.997475e-003, 7.872532e-003, -1.747456e-002, 1.118887e-002, 3.256639e-003, -8.519867e-003, -4.101375e-003, 6.888482e-003, -6.636652e-003, -8.026745e-005, 6.030720e-004, 3.785029e-003, 7.770903e-003, 7.880121e-003, -1.799559e-002, -5.987842e-004, 5.512408e-003, -9.093821e-004, 6.414472e-003, -1.793582e-002, 8.414916e-003, -6.217232e-003, 8.064298e-004, -1.756647e-002, -3.240232e-002, 3.902797e-002, 7.584796e-004, 1.127284e-002, 2.939342e-018, 6.259423e-003, -1.152667e-002, -1.246591e-002, 4.790057e-003, 1.171239e-002, -3.630792e-002, 4.764600e-002, 9.828904e-003, 1.766801e-003, 1.986071e-002, 4.554111e-002, -4.554111e-002, -1.986071e-002, -1.766801e-003, -9.828904e-003, -4.764600e-002, 3.630792e-002, -1.171239e-002, -4.790057e-003, 1.246591e-002, 1.152667e-002, -6.259423e-003, 1.631584e-002, -9.769741e-003, 1.133637e-002, -7.754281e-002, -2.987167e-002, 1.139472e-002, 4.949152e-003, 9.210778e-003, -1.684197e-002, 2.389595e-002, 1.019833e-002, -1.883477e-002, 2.721933e-002, -1.795584e-002, -3.378924e-002, -2.948896e-002, 3.324916e-002, -4.551614e-002, 7.733219e-003, 1.542077e-002, 6.016972e-002, -5.088231e-002, -1.079288e-002, -2.920852e-002, 4.259792e-002, -4.323872e-002, -1.018620e-001, 1.472142e-002, -7.693681e-002, 1.470291e-002, -3.492377e-003, 3.098660e-002, -3.644381e-002, 4.528108e-003, 7.953319e-003, 4.564146e-002, 3.986906e-002, -4.713265e-002, -1.903967e-003, -1.724232e-002, 3.349034e-002, 6.150531e-002, -4.600068e-002, -1.516493e-002, 3.280250e-003, -2.784740e-002, -3.379731e-002, -2.620664e-002, 1.416922e-001, -1.311902e-002, 1.836013e-002, -3.412581e-002, 2.826644e-003, 4.379492e-002, -1.356298e-002, 4.287730e-002, -4.241485e-003, -3.345556e-002, -5.420510e-003, -3.400286e-002, -1.022646e-002, -8.172149e-003, 8.914202e-002, 3.349740e-002, -2.116375e-002, 1.353025e-002, 6.451715e-002, -1.556993e-001, 1.644136e-002, 2.066007e-002, -2.269716e-002, 5.914686e-002, -3.276250e-002, -2.929975e-002, 4.433150e-002, 2.948801e-002, -1.147192e-002, 3.400468e-002, -2.483227e-003, -1.402776e-002, 9.547257e-003, 4.055393e-002, 6.645117e-002, 5.166406e-004, 1.564619e-003, -1.286391e-002, -8.037115e-002, -3.589344e-002, 3.111174e-003, -7.996340e-002, -7.110465e-002, 4.922147e-002, 8.070325e-002, 3.962714e-002, -3.182659e-002, 5.623430e-002, 5.942436e-002, -3.855931e-002, 8.389224e-002, -1.967873e-002, -3.702220e-002, -1.621307e-002, 2.872723e-002, 3.299198e-002, -8.818647e-003, -3.529243e-002, -7.392219e-004, -5.041783e-003, 2.621870e-003, 1.556940e-002, -4.126523e-002, 2.517759e-002, -1.716242e-002, 1.166059e-002, 4.712161e-002, -7.763951e-002, -1.548232e-001, 1.063537e-001, 2.265780e-002, -2.618522e-002, 5.342680e-002, -1.597096e-004, -1.205170e-002, -4.014082e-002, 3.359634e-002, 5.398862e-002, 2.283378e-002, -2.009550e-002, 3.135761e-002, -4.358553e-003, -2.155281e-003, 1.807216e-003, -4.954545e-002, 5.539775e-002, -2.845312e-002, -2.958725e-002, 1.272878e-002, -1.162043e-002, -3.767355e-003, 3.237191e-002, 1.034145e-001, -1.750708e-002, -2.973094e-002, 2.812033e-002, 1.973208e-003, 7.376831e-003, 3.274469e-002, -2.893467e-002, -1.195888e-002, -2.992359e-002, -1.580437e-002, -4.438141e-002, -4.449389e-002, -1.261057e-002, -7.148814e-003, -1.110599e-002, -9.876509e-003, 1.888851e-003, -1.071048e-002, -3.346030e-003, 4.593436e-002, 5.297981e-003, 1.066306e-001, -1.055066e-001, 5.268050e-002, 6.091233e-003, -8.146862e-002, 4.544242e-002, 1.954302e-002, -1.683674e-002, 1.314801e-002, -2.166796e-002, -2.692601e-002, 7.131688e-003, 1.287683e-002, 1.414599e-002, -6.141466e-002, -1.936520e-002, 8.361142e-002, -6.081881e-002, 1.145688e-002, 4.191904e-002, -4.680731e-002, -1.441521e-002, -6.778841e-004, -2.242837e-002, -1.762805e-002, 3.761035e-002, -3.634118e-002, 7.704430e-002, -3.514478e-002, -3.192739e-003, 1.526692e-002, -4.052755e-002, -3.105707e-002, -1.651806e-002, -6.778073e-003, 3.373764e-003, -6.724361e-003, 3.181580e-003, 1.974756e-002, -6.747152e-002, 7.517130e-002, -1.823428e-002, -5.328007e-003, 5.057915e-002, -8.899818e-002, 2.163216e-003, 5.316738e-003, -1.958672e-002, -6.301666e-003, -1.697585e-002, -4.186909e-003, 2.722378e-002, -1.796654e-002, -1.484744e-002, -7.160224e-003, -1.935243e-002, 1.029468e-002, 1.914151e-002, -2.412505e-003, 2.072406e-002, 2.943290e-003, -2.777365e-002, 5.733950e-002, -1.500854e-002, -2.988911e-002, 5.202152e-002, -3.710212e-002, 2.337109e-002, -1.101285e-002, 2.920204e-002, -3.470182e-002, -2.734465e-002, -4.352920e-003, 2.292002e-002, -2.613353e-002, -1.228966e-002, 7.925671e-003, -3.384052e-003, 2.632025e-003, -6.379832e-003, -7.968663e-003, 2.332268e-002, -8.260681e-003, -1.782694e-002, 1.881229e-002, 5.850530e-003, 1.793867e-002, 4.961942e-002, -3.127571e-002, -1.838162e-002, 1.202812e-002, 6.360727e-002, -2.814207e-003, -9.981760e-003, -5.078457e-003, -1.639417e-003, 1.613752e-002, -1.517707e-002, -7.272124e-003, -1.591773e-003, -4.542152e-003, -8.577507e-003, 4.652158e-003, 1.200679e-002, 5.630535e-003, 6.850263e-003, -3.603870e-003, 1.670038e-002, 9.226405e-003, 1.665104e-002, -1.689183e-002, -1.932601e-002, 2.521284e-002, -4.842533e-002, -1.072258e-002, 5.535576e-003, 2.695205e-003, -


© ISO/IEC 2004 — All rights reserved

Copyright International Organization for Standardization
Provided by IHS under license with ISO
No reproduction or networking permitted without license from IHS
Not for Resale

1.236736e-002, -8.736682e-003, 1.001512e-002, -6.478530e-004, -2.087005e-003, -5.795762e-003, -9.374336e-003, 1.549892e-002, 8.336237e-003, -5.932530e-003, 5.916466e-003, 9.993031e-003, -1.746484e-003, -2.816816e-003, 2.199512e-002, 5.569346e-003, -2.159552e-002, 4.543770e-004, -2.983951e-002, 4.974223e-002},
{3.594262e-003, 2.355217e-003, -5.494176e-003, -1.395295e-002, -3.193994e-002, 6.116192e-005, -2.520840e-002, -7.137965e-003, 7.197910e-003, -2.192081e-002, 1.965317e-002, 1.501263e-002, 1.501263e-002, 1.965317e-002, -2.192081e-002, 7.197910e-003, -7.137965e-003, -2.520840e-002, 6.116192e-005, -3.193994e-002, -1.395295e-002, -5.494176e-003, 2.355217e-003, 1.108240e-002, -1.823681e-002, -3.630259e-002, 2.302909e-002, 3.011973e-002, -1.116912e-001, -5.469172e-002, 3.110739e-003, -3.117818e-003, 2.813048e-002, 3.186662e-002, 5.411549e-002, -8.324064e-002, -1.607160e-002, 4.058894e-002, -9.437737e-002, -3.778616e-002, 1.131511e-002, 1.574456e-002, -7.033436e-002, 4.892206e-003, 4.475738e-002, -9.613298e-004, 2.086112e-002, 7.671869e-002, -1.061748e-002, -6.610714e-003, 5.457293e-002, 1.237687e-002, -2.665120e-002, -5.381585e-002, -2.740716e-002, -5.094341e-002, -2.018879e-003, -2.198390e-003, 1.501053e-002, -4.785888e-003, 1.806274e-002, 4.615823e-002, -9.454606e-003, 9.948429e-002, -1.277188e-002, -1.980251e-002, 7.148697e-002, -1.048545e-001, -9.142472e-003, -4.365289e-002, -2.257577e-002, 1.509833e-002, -1.463980e-001, 1.304753e-002, 1.839590e-003, -4.041864e-002, -4.760797e-002, 8.531828e-003, 7.385436e-003, -1.975241e-002, -3.225432e-004, -2.691307e-002, -2.394147e-002, -2.497891e-002, -7.410552e-003, 1.763180e-002, -7.521498e-002, 8.808602e-002, -3.618823e-002, -9.185270e-002, 1.134901e-001, 5.106655e-002, 4.800793e-003, 4.011411e-002, 1.995644e-001, 3.484234e-003, 9.035952e-002, -1.768865e-002, -2.645463e-002, 2.141976e-002, -3.020649e-002, -3.151375e-002, 1.225591e-002, 2.988997e-002, 3.092526e-002, -1.746559e-002, -5.495742e-002, -2.830685e-002, -4.372552e-002, -4.156070e-002, -2.378254e-002, 5.561625e-002, -6.302715e-002, 1.568801e-002, -2.729403e-002, -1.243109e-001, -1.100714e-001, 3.510177e-002, -1.898199e-002, -5.347098e-002, -3.909775e-002, 4.244689e-002, -3.719557e-002, -1.584232e-002, -1.861198e-002, 1.194369e-003, -5.104790e-004, 2.861034e-002, 3.985607e-002, -4.972474e-002, -2.499544e-002, 4.059877e-002, -8.119834e-003, -1.613383e-003, -5.335971e-002, -7.425108e-002, 7.210330e-003, 3.787004e-002, 1.506931e-001, 7.600396e-002, -3.285804e-002, 9.745164e-004, -1.782369e-002, -1.465471e-002, -5.347317e-002, -6.143328e-002, -8.192156e-002, -2.741417e-003, 1.063344e-002, -1.176173e-002, -1.800849e-002, 1.450732e-002, 3.962666e-002, 4.452214e-003, 5.053705e-002, 1.378296e-003, 8.535855e-003, 4.315347e-002, 6.844364e-003, -5.705039e-002, -4.119777e-002, -5.355485e-003, 1.530281e-002, -8.423185e-002, 1.896196e-002, -5.537307e-002, 3.405861e-002, -1.283058e-002, -3.099796e-002, 7.270694e-002, 1.460949e-002, -4.096681e-003, 2.962543e-003, -9.760303e-003, -1.639900e-003, 4.022113e-003, 1.541657e-002, 2.349460e-002, 5.154437e-002, -5.710366e-003, 5.203253e-002, 2.469630e-002, 8.386621e-002, -8.362111e-002, 7.573733e-002, 1.554744e-002, -8.790499e-002, 5.471259e-002, 2.752317e-002, -5.197204e-002, -1.399192e-003, 2.306232e-002, 3.466229e-003, 1.778014e-002, -1.959078e-002, -4.748983e-003, -1.316438e-002, -1.976910e-002, -5.712515e-003, 8.834650e-003, 2.866179e-002, -3.457242e-002, 2.649072e-002, -1.011460e-002, 1.907303e-002, -1.634517e-002, 6.548614e-003, -1.817482e-002, -3.095554e-002, 2.038892e-002, -5.231975e-002, -3.087440e-002, 1.250374e-002, -2.151901e-002, 3.553125e-003, 7.164705e-004, -1.522296e-002, 3.543406e-002, 2.391140e-002, 1.421347e-003, -2.119451e-002, -3.495666e-003, 5.061950e-003, -1.486995e-003, 7.382815e-002, -3.437857e-002, 2.869127e-002, -3.729833e-002, 1.066639e-002, 3.797844e-002, 6.057333e-002, -2.825143e-002, -9.912794e-003, -1.804971e-003, -4.212895e-002, 2.753427e-002, -7.184921e-003, -6.426529e-002, 1.183722e-002, 4.809249e-002, 2.239271e-002, 6.995999e-003, 8.113799e-003, -4.506846e-003, -1.791923e-002, -1.372053e-003, 7.718952e-003, -1.864659e-002, 3.945305e-002, -1.126647e-002, -3.048022e-002, 5.849329e-002, -2.751244e-002, -1.901355e-002, 4.088786e-002, -4.173964e-002, -3.315920e-002, 5.094045e-002, -2.042750e-002, -3.196890e-002, 8.114567e-005, 1.411833e-002, 1.165798e-002, 1.462543e-002, -1.056626e-002, -1.008450e-003, -1.433008e-002, -4.086262e-003, 1.638197e-003, 1.283663e-002, -7.399867e-003, -7.766785e-003, 1.874835e-002, 8.075423e-003, -4.794585e-002, 6.291418e-002, 1.375587e-002, -3.068445e-002, 4.270577e-002, -3.403130e-003, -2.432460e-002, -6.198890e-003, -1.667788e-002, -1.702730e-002, 2.522738e-003, 3.887334e-003, 1.500389e-002, 7.705107e-003, 1.246415e-002, 9.163471e-003, -1.133839e-002, -8.079975e-003, -1.137758e-002, 4.017234e-002, -1.906171e-002, 9.237847e-003, 1.174655e-002, 2.349038e-002, 4.990621e-003, -6.852058e-002, 7.570499e-002, -2.468786e-002, -6.606393e-003, 3.172704e-003, 2.317820e-002, -3.928352e-002, -1.007991e-002, 1.575205e-002, 1.004282e-002, -4.611418e-003, -9.940951e-003, -1.594984e-002, 1.511826e-003, 4.437073e-003, -1.272165e-003, 1.750364e-002, -2.668073e-002, 2.802802e-002, 2.013129e-002, -3.596419e-002, 6.127222e-003, 4.735634e-002, -5.208438e-017, -6.757235e-004, -4.493557e-004, -7.151948e-003, 1.297437e-002, -3.879657e-002, 3.606599e-002, -2.846063e-002, -3.215774e-002, 2.341374e-002, 1.606269e-002, 3.491842e-002, -3.491842e-002, -1.606269e-002, -2.341374e-002, 3.215774e-002, 2.846063e-002, -3.606599e-002, 3.879657e-002, -1.297437e-002, 7.151948e-003, 4.493557e-004, 6.757235e-004, -3.067015e-003, -3.060512e-002, -3.151245e-002, 9.254038e-003, -2.136086e-002, -1.346562e-001, 2.775126e-002, -6.065710e-002, -5.179046e-002, -5.840346e-003, 3.540553e-002, -1.997261e-002, -4.323598e-003, -4.120690e-002, -2.353011e-002, -

© ISO/IEC 2004 — All rights reserved


Copyright International Organization for Standardization
Provided by IHS under license with ISO
No reproduction or networking permitted without license from IHS
Not for Resale

4.671847e-002, -7.105170e-002, 1.609420e-002, 7.239258e-003, -5.152469e-002, -8.337363e-003, 3.311526e-002, -7.355491e-003, 1.828617e-002, 6.477486e-002, -1.713752e-002, -5.343549e-003, -6.369085e-003, 7.619548e-002, -8.757969e-003, 8.900214e-003, 1.610477e-002, 2.072048e-002, -2.499466e-002, -4.911775e-003, 1.503576e-002, 4.149187e-003, -3.009660e-002, -8.427504e-003, 4.066332e-002, 3.268278e-002, 1.065399e-002, 6.547271e-002, 5.288219e-003, -1.106450e-002, -8.792336e-002, 2.827926e-002, -4.862269e-002, 8.908055e-002, -2.998592e-002, 6.004095e-002, 5.263268e-002, 5.430606e-002, 3.771135e-002, 5.786017e-002, 4.680578e-002, 4.985295e-002, 6.245249e-002, -3.392757e-002, -1.986315e-002, 2.001563e-002, -2.109031e-002, -6.796415e-003, -3.761381e-002, -3.726822e-002, -3.896708e-003, 5.297654e-002, -8.131445e-002, 6.651015e-002, -5.631915e-003, -6.206233e-002, -9.437268e-002, 1.284516e-001, -4.249770e-002, -1.042108e-001, 1.253853e-002, 2.624581e-002, 1.135419e-002, -5.558718e-003, 1.498270e-002, 3.150259e-002, 4.048426e-002, 5.921041e-002, 5.440758e-002, -5.452758e-003, -2.444237e-002, 9.669048e-002, -9.067991e-002, 1.109688e-002, 8.339985e-002, 4.124868e-002, 1.188364e-001, 1.028986e-001, 9.508349e-002, -8.147509e-002, 4.922616e-002, -9.239632e-002, 9.702985e-002, -1.798438e-002, -1.370198e-002, -3.011922e-003, 3.478303e-002, 3.578695e-002, 5.946119e-003, -2.566247e-002, -1.542669e-003, -4.321269e-003, -2.493690e-002, -5.963697e-002, -5.549221e-002, 7.825786e-002, -7.950103e-002, 6.332644e-002, -7.176988e-002, 3.689206e-002, -4.785326e-002, -9.764275e-003, 5.215341e-002, -6.592607e-002, 5.913384e-002, 2.627363e-003, 1.644142e-002, -5.907733e-002, -2.649956e-002, 7.470975e-004, -1.503628e-002, -1.705721e-002, -1.290797e-002, -5.994091e-002, 2.185735e-003, 6.157264e-003, -3.787267e-002, -1.994501e-003, -3.662712e-002, 1.224712e-002, -5.770390e-002, 1.498354e-001, -1.023751e-001, -3.432542e-002, -2.421624e-002, -1.401284e-002, 3.904491e-002, -6.283371e-002, -1.002240e-002, -7.294595e-002, -1.082224e-002, 2.648178e-002, 8.697766e-003, 4.798569e-003, -5.422021e-003, 5.215013e-003, -5.008920e-003, -5.923385e-002, -4.501902e-004, 5.155478e-002, 9.017220e-003, 6.628652e-003, 3.030151e-002, -8.745051e-003, -2.309089e-002, 1.414968e-004, -2.219613e-002, -3.070469e-002, 9.401116e-002, -5.324904e-002, -3.855349e-002, 4.387691e-003, 1.193525e-002, 2.524323e-002, 2.269702e-002, -7.338300e-003, -2.834852e-002, 1.296876e-002, 2.434752e-002, -7.593133e-003, -3.688582e-002, -2.480991e-002, 1.775011e-002, -3.336727e-002, 2.422700e-002, 1.798135e-002, 5.312672e-003, 1.693987e-002, 2.200964e-002, -7.046894e-002, 2.701494e-002, 1.855804e-002, -6.827805e-002, 3.000367e-002, -4.606468e-003, 2.032981e-002, 6.374354e-003, -6.335347e-003, -6.994963e-003, 7.390056e-003, -2.329060e-002, 3.403460e-002, 3.426245e-002, -1.834968e-002, -2.759695e-002, -1.726205e-002, 3.865548e-002, -4.518417e-002, 4.461750e-003, 1.498753e-002, 4.912970e-003, 1.294211e-002, 2.968207e-002, -4.046233e-003, 5.692870e-003, -4.537133e-002, 2.782462e-002, 3.382999e-002, -6.720140e-002, 2.729395e-002, 2.768452e-002, 8.740862e-003, -2.582386e-003, -5.879654e-003, 1.072574e-003, 2.142401e-002, 3.543725e-003, -2.165762e-002, 3.320877e-002, -4.158894e-002, 1.584359e-002, 3.162343e-002, -2.925333e-002, 2.023773e-002, -2.449833e-002, -1.412984e-002, -2.889982e-003, -3.853155e-002, 7.137424e-003, 5.128974e-003, -4.016506e-002, 1.737877e-002, 1.963244e-002, 2.139854e-002, 6.089128e-003, -5.028337e-004, -1.743352e-002, 1.340212e-002, 1.287051e-002, 8.342010e-003, -9.159841e-003, -2.396115e-002, 3.985504e-002, -3.301092e-002, -3.430325e-002, 6.018637e-002, -4.354457e-002, 4.499034e-002, -7.874127e-002, 3.425538e-002, 6.544891e-004, -4.973732e-002, 1.912689e-002, -1.067189e-002, 6.648923e-003, -2.103713e-003, 2.487694e-003, 1.508051e-002, -1.262431e-003, -9.929345e-003, -4.378941e-003, -4.059288e-004, 5.882351e-003, -1.502452e-003, 1.222671e-003, 2.536238e-003, -3.129088e-003, 6.169605e-003, -3.362855e-002, 2.778404e-002, 4.305065e-002, 4.888372e-002, 7.275831e-003, -3.939741e-002, -1.995997e-003, 5.632611e-003, -4.185488e-002, -2.440235e-002, 2.428667e-002, 1.142209e-002, 3.674119e-003, -1.001701e-002, -2.050422e-003, -2.866314e-003, -1.092952e-002, 9.124030e-003, -4.069667e-003, 7.404654e-003, 2.285000e-003, -5.522064e-003, 6.982286e-003, 1.475885e-002, 1.035361e-002, -1.330057e-002},

{-2.923808e-003, 4.016264e-003, 5.324111e-003, -2.953860e-002, 5.567484e-002, -3.985675e-002, 3.610681e-005, -2.636315e-002, -1.255816e-002, -7.135924e-003, -4.784183e-003, -2.825060e-002, -2.825060e-002, -4.784183e-003, -7.135924e-003, -1.255816e-002, -2.636315e-002, 3.610681e-005, -3.985675e-002, 5.567484e-002, -2.953860e-002, 5.324111e-003, 4.016264e-003, 1.827258e-002, 8.932519e-003, 4.057459e-002, -3.073240e-002, 9.447501e-002, -5.207764e-002, 2.309559e-002, 2.627315e-002, -1.606931e-002, 1.908828e-002, 2.049121e-002, 9.704110e-003, -1.848949e-002, -1.935337e-002, -1.365445e-003, -2.018507e-002, -6.031798e-004, -1.526726e-002, 2.501536e-002, -1.159118e-002, 1.422164e-002, 6.649873e-002, -4.595855e-002, -9.863485e-003, 1.665745e-002, -8.352633e-002, 6.534465e-002, 2.169495e-002, -2.956551e-002, -3.000944e-002, -9.216696e-003, 1.560034e-002, 2.060501e-003, -1.745037e-002, -1.337035e-002, 2.554839e-002, -9.568448e-003, -5.424326e-003, -3.439226e-003, 1.946714e-002, 5.144785e-002, -3.014926e-002, 6.556068e-002, 3.670270e-002, -9.773590e-002, 7.303685e-002, -9.791575e-003, -2.528860e-002, -3.567279e-002, 1.122851e-001, -1.127930e-001, 7.232959e-002, 5.710472e-002, -8.468931e-002, -1.091125e-004, 2.122796e-002, 1.410663e-002, 2.957342e-002, 8.075851e-003, -5.146943e-004, -3.269557e-002, 6.665414e-003, -2.349639e-002, -2.243155e-002, 9.396073e-002, -7.038281e-002, 2.296884e-002, 5.290865e-002, 1.157344e-001, -5.616300e-002, -1.508049e-002, 3.723878e-002, -3.189899e-002,


© ISO/IEC 2004 — All rights reserved

Copyright International Organization for Standardization
Provided by IHS under license with ISO
No reproduction or networking permitted without license from IHS
Not for Resale

6.182473e-003, -1.250489e-002, -1.041737e-001, -8.043794e-003, 6.893020e-003, 1.632799e-002, -2.313114e-002, -5.723993e-002, 5.307890e-002, 7.533960e-003, -1.884394e-003, 2.598278e-002, 3.154426e-002, 2.576628e-002, 4.803628e-002, -5.945352e-002, -1.429159e-002, 5.370961e-002, 1.797950e-002, 5.930408e-003, -9.885234e-002, 2.539715e-002, -1.262419e-001, 9.171963e-002, 6.309614e-002, 3.397223e-002, 4.555223e-002, 1.731175e-002, 1.474866e-002, -7.541653e-003, 4.395143e-003, 3.331797e-002, 3.765334e-002, -4.832859e-002, -5.192724e-002, 9.590397e-003, -1.013354e-004, -3.131882e-002, 4.243980e-002, -2.971182e-002, 2.115946e-001, -9.612161e-002, 6.397603e-003, 1.501553e-001, -1.014027e-001, 5.838913e-002, -1.583633e-002, -2.587260e-002, -9.369293e-003, -8.005512e-002, 1.327779e-002, 4.833315e-002, -1.406841e-003, -3.605751e-002, -1.303599e-002, 2.876629e-002, 5.242207e-002, 3.965789e-002, -7.275580e-003, 2.739455e-002, -5.904887e-003, -6.864946e-003, 7.463864e-003, -1.123992e-001, 1.013413e-001, 2.830066e-002, -1.427058e-003, 1.000673e-002, -3.352729e-002, -2.489645e-002, -6.272016e-003, -2.887641e-002, 2.527615e-003, 2.851930e-002, 2.372774e-002, -4.270004e-003, -1.671691e-002, -3.131525e-002, -2.494272e-002, 1.705392e-002, 7.504441e-003, 4.115023e-002, 3.704956e-002, 3.671299e-002, -3.115924e-002, 3.944142e-002, -3.523877e-002, -9.161194e-002, 7.497820e-002, -2.495929e-002, -4.734048e-003, -7.337497e-002, 2.739170e-002, 3.073727e-002, 7.625872e-003, -2.135231e-002, 2.392760e-003, 1.432989e-002, -9.402601e-003, 4.237863e-003, -1.280763e-002, -1.990311e-002, -2.181260e-003, 6.676631e-003, -1.602563e-002, 3.957663e-002, 2.190311e-002, 1.254898e-002, -4.448120e-002, 2.878060e-002, -5.200113e-002, 6.289208e-003, 3.527967e-002, -9.609937e-002, 7.005616e-002, -3.122361e-002, -8.836968e-003, -3.387246e-002, -6.544974e-003, 4.622976e-002, -2.742543e-002, -1.865348e-002, -4.897064e-003, 5.124900e-003, -2.475576e-002, -8.443049e-003, 6.705628e-003, 1.910033e-002, -3.853759e-002, 4.362724e-002, -9.218547e-003, 3.706693e-002, -3.964309e-002, 9.687084e-003, -5.218911e-002, 8.814688e-003, 1.457173e-002, -4.419563e-002, 2.325105e-002, -3.132100e-002, 1.649159e-002, 2.532306e-002, 3.091151e-004, -1.494918e-002, -2.530102e-002, -2.407180e-004, 1.289626e-002, -1.733199e-003, -1.878380e-002, 4.515395e-003, 3.725019e-003, 3.116933e-002, -3.470403e-002, 8.653303e-003, 2.558743e-002, -4.695117e-004, -8.880747e-003, 3.664177e-002, 1.638749e-003, -1.281564e-002, 2.620168e-002, -1.989583e-002, 1.264487e-002, -4.018117e-002, 1.137326e-002, 1.238499e-002, -1.264629e-002, -5.404788e-003, -1.533856e-002, 3.675290e-003, -3.777501e-003, -3.967522e-003, 9.947146e-003, 2.318543e-002, -1.858318e-002, 1.196045e-002, 9.978865e-003, 3.229507e-003, 9.763139e-003, 2.473379e-002, -1.085418e-002, 5.305120e-003, -2.969368e-002, 2.717704e-002, 4.809908e-003, -1.464398e-002, -1.272273e-002, 2.157874e-002, 1.676417e-002, -4.744362e-003, -1.631881e-002, -6.636129e-003, 3.191370e-003, -8.224719e-003, -5.194996e-003, -9.072377e-004, 1.310841e-002, -2.953205e-003, 9.389511e-003, -5.177644e-003, 2.869640e-002, -1.603346e-002, 6.263292e-003, 1.436532e-001, -6.863314e-002, 1.490509e-002, 3.314992e-003, 8.133078e-003, -2.082984e-002, 1.798302e-002, -1.155530e-002, 6.635842e-003, -9.726788e-003, -1.385653e-002, 1.252639e-003, 1.152565e-002, 1.163593e-002, -9.750363e-003, 1.402715e-002, 1.055072e-004, 1.446329e-002, -2.122186e-002, 3.681339e-003, 2.575727e-002, 1.343786e-002, -8.233173e-002, 1.786371e-017, -6.762822e-003, 8.343040e-003, 2.183387e-003, 1.021694e-002, -9.883680e-003, 8.520109e-003, -1.808069e-002, 8.049111e-003, -1.718010e-002, -2.245744e-002, -2.082403e-003, 2.082403e-003, 2.245744e-002, 1.718010e-002, -8.049111e-003, 1.808069e-002, -8.520109e-003, 9.883680e-003, -1.021694e-002, -2.183387e-003, -8.343040e-003, 6.762822e-003, 2.561702e-002, -3.671801e-002, 3.072209e-002, 1.637765e-002, -5.078767e-002, 1.267942e-001, -1.715889e-002, -4.835635e-003, 8.658850e-003, 3.195004e-002, 3.825226e-002, 1.288994e-002, -2.428876e-002, -1.557292e-002, 9.742180e-004, -5.142963e-003, -2.470841e-002, -1.131484e-002, 1.190678e-001, -6.332348e-002, -1.737310e-002, 3.282936e-002, 2.608370e-002, -2.360358e-002, -2.113456e-002, 3.344314e-002, 1.252705e-002, -5.239217e-003, -4.144047e-002, 8.849213e-003, 2.592922e-002, -2.643362e-002, -1.763300e-002, 1.348106e-002, 1.888243e-002, -7.394388e-003, -8.011613e-003, 5.038562e-003, -1.253289e-002, 1.331925e-002, 1.299669e-001, -1.280452e-002, 6.683929e-002, -7.463569e-002, 1.147464e-001, -7.036470e-002, 2.529088e-002, -6.734688e-003, -5.918527e-002, 5.356510e-002, -2.257106e-002, 6.740411e-003, -5.092509e-003, -1.293606e-002, -3.257199e-003, -1.378839e-002, -2.840278e-002, -3.455448e-002, -2.736440e-002, 3.289498e-002, 9.479328e-002, 4.321230e-002, 2.692327e-002, -6.032704e-003, -6.626588e-002, -1.024224e-002, -6.418367e-003, -6.247597e-004, 4.438886e-002, 1.599439e-002, 3.728093e-002, -3.308255e-002, 3.121454e-002, -2.109503e-002, 1.652929e-002, 8.941100e-003, 5.478705e-002, 4.706317e-003, -3.148590e-002, -5.124980e-002, -1.018994e-002, -1.799485e-002, -4.109638e-002, -5.573730e-002, -1.076273e-002, -3.354642e-002, 4.882317e-002, 2.748968e-002, -1.986722e-002, 1.579351e-001, 7.646995e-003, -6.003137e-002, 8.411933e-003, 8.028863e-002, 5.642273e-002, -1.690060e-002, 9.874298e-002, -1.953338e-002, -5.221782e-004, -3.720295e-002, -2.774318e-002, -3.745855e-002, -4.555201e-004, 8.734714e-005, -1.713390e-002, -2.311704e-002, 1.286131e-002, -1.229149e-002, 2.860181e-003, -1.734210e-002, 2.679635e-002, 1.446126e-002, -8.034938e-002, -9.380990e-002, -2.626850e-002, 4.029427e-003, 8.128866e-002, -4.542371e-002, -2.155990e-002, -7.358071e-002, -4.263309e-002, 1.800794e-002, 3.404791e-002, -1.006008e-002, -1.598180e-002, -1.921595e-002, -9.899956e-003, -7.630626e-004, -3.991688e-003, -4.046139e-002, 1.343028e-002, -2.311858e-003, 4.807048e-003, 9.029727e-003, -7.219788e-002,

© ISO/IEC 2004 — All rights reserved


Copyright International Organization for Standardization
Provided by IHS under license with ISO
No reproduction or networking permitted without license from IHS
Not for Resale

1.374417e-001, -3.990244e-002, 1.163944e-001, -3.072110e-002, -6.324935e-002, 1.267132e-001, -1.086923e-001, 5.420102e-002, 6.755872e-002, -9.128034e-003, -3.438589e-002, -1.280754e-002, 1.847628e-002, 3.005719e-003, -1.529272e-002, 1.315479e-002, -4.393135e-002, -1.102290e-002, -3.273826e-002, -3.309577e-002, 2.617715e-003, 4.058973e-002, -1.108326e-002, -1.149647e-001, 1.025421e-001, -6.842057e-002, 6.078275e-002, 4.126638e-002, -1.155147e-001, 4.201149e-002, -2.386222e-002, -5.056982e-002, -4.455529e-005, -2.470867e-002, 4.758848e-002, 4.844306e-002, -9.319671e-004, -2.818978e-002, -1.030006e-002, -4.591659e-003, -1.802418e-002, 1.697558e-002, -1.815183e-002, -3.097022e-002, 2.721827e-002, 1.192456e-002, -4.350499e-002, -6.750302e-002, 1.444516e-002, -1.033883e-001, 4.794829e-002, -2.301836e-002, -4.403831e-002, 1.322780e-002, 5.226539e-002, -1.856199e-002, 3.632115e-002, -1.162898e-002, -2.899317e-002, -2.639656e-002, -2.040980e-003, 2.892491e-002, -1.271494e-002, -4.171729e-002, -1.584473e-002, 1.879281e-002, -1.541376e-002, 2.900316e-002, -4.884485e-003, 8.970572e-005, -3.965107e-002, 2.315545e-002, 3.729832e-002, -5.497679e-002, 4.885315e-004, -2.167682e-002, -5.665309e-003, -7.507080e-003, 2.468572e-002, -5.273378e-002, -4.378178e-003, -8.396835e-003, -1.499754e-003, 2.405729e-002, 2.200611e-002, 2.156461e-002, -1.161669e-003, -1.148279e-002, -3.705581e-003, 2.920934e-002, -2.863572e-002, -7.408307e-003, 1.303343e-002, -3.823280e-002, -4.607496e-002, -2.529298e-002, -2.428009e-002, 1.120448e-002, -4.563784e-002, -2.197232e-002, 1.267239e-002, -2.261219e-002, 1.923321e-002, 9.437655e-004, -1.073079e-002, -1.049620e-002, 1.135744e-003, -2.402922e-003, 2.582444e-003, -1.117546e-002, -1.957274e-002, 1.839576e-002, -1.842385e-002, 2.480200e-002, 1.533464e-002, -5.474866e-002, 5.198092e-002, -1.055340e-002, 4.327195e-002, -2.743502e-002, -2.875564e-002, 3.394198e-002, -2.791400e-002, -7.292050e-004, 2.128698e-003, 2.450167e-004, -8.177591e-003, -1.554823e-002, -3.011489e-003, 1.182336e-002, 7.931057e-003, 6.029409e-003, -1.040985e-002, -6.319974e-003, -8.681609e-003, 2.143182e-002, 5.105352e-003, -5.651005e-002, 7.046732e-002, -2.618881e-002, -4.862527e-002, -1.940927e-002, -1.818100e-002, 5.535272e-002, -6.030735e-002, 8.125129e-003, -3.087570e-005, -1.551597e-002, -4.865711e-003, -7.807652e-004, -6.667822e-003, -2.535425e-004, -2.145809e-003, -1.896994e-003, 5.173501e-003, 3.930269e-003, -1.702075e-002, 8.140893e-003, 3.693220e-003, 7.609380e-003, 2.642752e-002, -5.521111e-002, 3.337620e-002, -1.347020e-002},
{2.227409e-003, 2.407342e-003, -8.373593e-003, -3.165462e-003, 1.073731e-002, 4.042270e-002, -4.061421e-003, -2.898287e-002, 4.153850e-002, -4.132935e-002, 2.644460e-003, 1.095445e-002, 1.095445e-002, 2.644460e-003, -4.132935e-002, 4.153850e-002, -2.898287e-002, -4.061421e-003, 4.042270e-002, 1.073731e-002, -3.165462e-003, -8.373593e-003, 2.407342e-003, -9.526748e-003, -3.121203e-002, 9.891267e-003, 1.458245e-002, 4.248328e-002, 9.102895e-002, 7.788418e-002, 2.262663e-002, -8.607166e-002, 4.806477e-002, 6.825551e-002, 3.945470e-002, -1.515644e-003, -1.149153e-002, -1.128082e-002, -2.055774e-002, -4.737655e-003, -6.324527e-003, 6.555718e-002, 6.791918e-002, -8.632070e-002, -2.165980e-002, 3.572504e-002, 1.010950e-002, 2.819311e-002, -3.058693e-002, -6.214056e-002, -1.376702e-001, 5.126161e-002, 7.652036e-002, -4.686874e-002, -8.474569e-003, 7.401665e-003, -3.270456e-002, -6.009877e-002, -5.661228e-004, 2.312573e-002, 2.801978e-002, -2.063499e-002, -1.816478e-002, 5.248108e-002, 1.697075e-002, -5.040808e-002, 3.509043e-002, 3.643197e-002, -4.837849e-002, 3.308652e-002, 3.194310e-002, 7.634834e-002, 2.213759e-002, 2.649515e-002, 2.041374e-002, -6.010482e-002, 2.089142e-002, 6.529813e-002, 5.367809e-002, -3.170750e-003, -1.056727e-002, 5.324180e-003, 3.129889e-002, 3.733395e-002, 3.279906e-002, -8.156181e-003, 1.969592e-002, 5.161747e-002, 9.632200e-002, -2.664694e-002, 5.681115e-003, 1.829700e-002, 3.314883e-002, -1.342927e-001, -4.539075e-002, -4.048814e-002, -2.466043e-002, 7.837493e-002, -3.073406e-002, -3.212286e-002, -4.581210e-003, -8.908310e-003, -2.202301e-003, 7.848505e-003, 5.288618e-002, 1.539461e-002, -4.123374e-002, -4.304461e-002, -5.425469e-003, -7.941964e-002, -2.148040e-002, 5.763727e-002, -4.642765e-002, 7.076869e-002, 1.234924e-001, -1.961156e-001, 3.552827e-002, -1.086052e-002, -3.929907e-002, 3.854319e-002, -4.434719e-003, 3.527506e-002, -7.697193e-003, -4.333053e-003, -8.758806e-003, -1.379939e-002, -2.090086e-002, -4.718999e-003, 5.407083e-002, 1.982672e-002, -1.649477e-002, -5.114805e-003, 8.541743e-002, 9.524921e-003, -9.198660e-004, 9.181966e-003, -5.218374e-003, -4.934310e-002, 2.293432e-003, -5.323588e-002, 2.273107e-002, -9.446844e-002, 1.744565e-002, 4.285470e-002, 3.721502e-002, 4.366363e-002, 1.049045e-002, 1.078340e-002, 4.484403e-003, 4.206936e-003, 8.265991e-003, 2.936774e-002, 3.439243e-002, -5.816523e-002, -2.125887e-002, 3.622923e-002, 3.840567e-002, -8.447242e-003, -8.297540e-002, 3.088787e-002, -7.690559e-002, 2.267953e-002, -3.382823e-002, 2.781310e-002, -4.207554e-004, 2.841044e-003, 9.884908e-002, 5.357971e-002, -3.755545e-002, -2.830186e-002, -2.992192e-002, -3.092337e-002, -2.030925e-002, -2.542657e-002, 1.541859e-003, 2.817644e-002, 3.855282e-002, -5.210404e-002, -8.589815e-003, 9.714847e-002, -3.901321e-002, -2.417883e-002, -2.569327e-002, 4.688755e-002, 1.135220e-001, -1.146937e-001, -9.457326e-003, 1.627616e-002, 1.208637e-001, -5.609660e-002, -1.820374e-003, 3.970652e-002, 3.992249e-003, -2.981436e-002, -3.973546e-002, -3.865587e-003, 2.821737e-003, -3.940030e-002, 3.479992e-003, 6.621549e-003, -7.517117e-004, -5.983356e-003, -4.249217e-002, 7.225297e-002, 2.318055e-002, -3.467569e-002, -5.762696e-002, -1.090026e-001, -1.719453e-002, 8.745778e-002, 4.048701e-002, -5.092294e-002, -9.939986e-004, 2.823281e-002, 3.855229e-002, -2.243292e-002, -


© ISO/IEC 2004 — All rights reserved

Copyright International Organization for Standardization
Provided by IHS under license with ISO
No reproduction or networking permitted without license from IHS
Not for Resale

3.824321e-002, -1.234033e-002, 1.057002e-002, -5.586477e-003, 1.134723e-002, -1.520993e-002, -1.460710e-003, 3.586564e-002, 1.681096e-002, 3.883044e-002, -5.356333e-002, -3.055737e-003, 1.747643e-002, 4.329000e-002, -2.051648e-002, -3.156266e-002, 4.531123e-002, -4.058393e-004, -7.168912e-003, 2.942271e-002, 7.682210e-003, 4.739164e-003, -6.252668e-004, -1.697847e-002, -1.274055e-002, -1.476432e-002, -7.881278e-003, -1.149845e-002, 2.680036e-003, 2.122589e-002, 3.889473e-003, 1.090588e-002, 4.050170e-002, -2.564062e-002, 2.377602e-002, 7.586145e-003, -5.029864e-003, -6.854066e-004, -8.869050e-003, -4.564600e-002, 3.701141e-002, 4.504429e-002, -5.338570e-002, 2.814334e-002, 2.859558e-002, -2.424299e-002, -3.030359e-002, -6.681543e-003, 8.119409e-003, 6.226870e-003, 6.847080e-003, 5.364089e-004, 4.173847e-003, 2.949650e-003, 4.168432e-003, -4.240427e-002, 4.795647e-002, 7.925154e-003, -1.953974e-002, 2.494161e-002, -8.235167e-002, 2.532598e-002, 5.983591e-002, -1.522868e-002, -3.608588e-002, 1.365215e-002, 1.527398e-002, 1.420153e-003, -2.763431e-002, -2.736467e-003, 3.187867e-003, 2.175229e-003, -5.626491e-003, 1.176569e-002, 1.485630e-002, 3.263736e-003, -5.437967e-003, -8.383306e-003, 2.568550e-002, -1.807532e-002, -1.460632e-002, 4.172518e-002, 5.072476e-002, 2.892152e-002, -1.244818e-002, 6.493064e-003, 1.561354e-002, -2.684480e-003, 8.196124e-003, -5.822740e-003, -7.610440e-003, 9.015025e-003, -1.658694e-003, 1.317451e-003, -3.633694e-003, -1.175018e-003, -6.500522e-003, 4.429788e-003, 1.803897e-002, -1.908905e-002, -9.226799e-003, 2.059146e-002, -2.722803e-003, 1.649758e-002, -2.743951e-003, -4.289740e-003, 4.786645e-017, -4.177415e-003, 3.755136e-003, 7.582103e-003, -3.418218e-002, 1.040950e-002, 8.874207e-003, 8.816713e-003, 2.851348e-002, -4.298465e-002, -1.312629e-002, 1.441705e-002, -1.441705e-002, 1.312629e-002, 4.298465e-002, -2.851348e-002, -8.816713e-003, -8.874207e-003, -1.040950e-002, 3.418218e-002, -7.582103e-003, -3.755136e-003, 4.177415e-003, 1.861109e-003, -1.588364e-002, 4.253779e-002, -1.580036e-003, -1.146492e-001, 7.584614e-002, -8.611508e-002, -3.237923e-004, 2.613410e-002, 2.060737e-002, -3.862622e-004, -2.694505e-003, -1.932851e-002, -1.839725e-002, -4.154737e-002, 3.476564e-002, 1.024403e-002, -7.195794e-002, 7.542247e-002, -4.364162e-002, -6.762261e-002, -4.001105e-003, -1.252821e-002, -9.848447e-004, 1.302958e-002, -5.399625e-002, 1.823756e-002, 1.872182e-002, -9.586955e-002, -1.095659e-002, -2.550684e-003, -1.891745e-002, 1.303502e-002, 4.579469e-002, 2.010561e-002, -1.495859e-002, -4.125997e-002, 1.969168e-002, 3.976201e-002, 2.976871e-002, 1.270910e-002, -1.181241e-001, 4.942683e-002, 1.199914e-001, -1.281578e-002, 4.579484e-002, 2.672203e-002, -5.626935e-002, 1.008920e-001, 1.418283e-002, 7.510289e-003, -8.719884e-002, -7.716843e-002, 1.630380e-002, 7.838501e-003, 1.231465e-002, -1.591754e-002, -5.205135e-002, 1.257874e-002, 3.201206e-002, -2.003115e-002, -5.591433e-002, -3.742799e-002, -1.284424e-002, 7.752307e-002, -4.814398e-002, -6.792711e-002, 1.751721e-002, 5.352424e-002, -8.778223e-002, 4.343726e-002, -5.364655e-002, -2.367935e-002, 4.726890e-002, -5.095031e-002, -1.432326e-002, -4.124867e-002, -4.350077e-002, -5.118969e-002, -5.552297e-002, -2.978985e-002, -3.910652e-002, -2.145467e-002, -1.718824e-002, 2.176492e-002, 1.570434e-002, 4.191798e-002, -4.890539e-003, 8.268965e-002, -3.416465e-002, -4.351878e-002, -1.571771e-001, 1.141331e-001, 3.265314e-002, -2.953905e-002, -4.755997e-002, 1.992052e-002, -1.910593e-002, 2.921646e-002, 5.240481e-002, 2.292760e-002, -9.574329e-003, -7.123235e-003, -4.624864e-003, 3.222278e-002, 9.282507e-003, -1.533886e-002, -4.647220e-002, -5.640078e-003, 1.577052e-002, -1.088291e-002, -1.353334e-002, 8.846950e-002, 7.901918e-002, -6.854633e-002, -2.821716e-002, -8.151468e-003, 1.152186e-002, -2.102262e-002, -1.342871e-002, -1.589627e-002, -1.359248e-002, -7.179793e-002, -6.527788e-002, 4.799937e-003, 1.859877e-002, 1.293003e-002, 1.645567e-002, 6.790587e-002, 3.982759e-002, -5.193657e-002, -9.318798e-002, -2.039802e-002, 1.259637e-002, 3.043556e-003, -2.983404e-002, -3.279132e-002, 3.269035e-002, -6.338508e-002, -1.707868e-002, -6.898931e-002, 9.229263e-003, 1.464395e-002, 1.756667e-002, -6.830610e-005, -2.029660e-002, 5.470019e-003, 1.109321e-002, -9.948142e-003, -4.817030e-003, -4.101173e-002, -1.263972e-003, 4.702823e-002, 2.630138e-002, -4.297640e-002, 6.774904e-003, -1.568106e-002, -2.260268e-002, 8.717551e-003, -9.551187e-002, 3.013194e-002, 3.090873e-002, -4.635203e-002, 1.702795e-002, -3.079520e-002, 1.242024e-002, -5.612957e-003, 5.211727e-002, -1.025190e-003, -5.302155e-002, -4.349537e-002, -7.856331e-003, 2.028838e-002, 4.378673e-003, -1.292560e-002, -1.050060e-002, -2.326418e-002, -2.039607e-002, -7.801840e-003, 3.221634e-002, -2.532314e-002, -6.091329e-002, 4.085983e-002, -9.680263e-003, -9.582871e-002, 2.191392e-002, 4.929265e-002, -4.788172e-002, -4.842856e-002, 7.193015e-002, 3.176189e-002, -6.542671e-002, -5.335186e-002, 2.223312e-003, 3.124890e-002, 1.035909e-002, -1.166540e-002, -7.898150e-003, 2.440163e-003, -9.449928e-003, -6.214924e-002, 1.553474e-002, 5.472499e-002, 5.794645e-003, -1.050898e-001, 4.608192e-002, 2.370116e-002, -7.585303e-003, 3.357195e-002, -1.089995e-001, 4.059229e-002, 1.518843e-003, 4.003295e-004, -1.497560e-002, -1.904501e-002, -7.685792e-003, 2.812048e-003, 8.476628e-003, 8.309947e-003, 1.266124e-002, 2.383087e-003, -1.815922e-004, 1.711910e-002, -8.737430e-003, -2.505938e-002, 8.989212e-003, 7.999841e-003, 1.923744e-002, -1.082936e-001, 6.243505e-002, -6.351008e-002, -5.971159e-003, 4.903277e-002, -2.766805e-002, -1.555986e-002, 5.529411e-003, 3.428021e-002, -2.263444e-002, -3.345861e-002, -9.232872e-004, 1.659181e-002, 7.393864e-003, -4.182752e-003, -1.105939e-002, -5.238373e-003, 4.758379e-003, 1.382922e-002, -3.267849e-003, 1.709555e-002, -8.358161e-004, -7.781778e-002, 2.872608e-002, 2.982856e-003, -6.825897e-002, 1.686182e-002, -

© ISO/IEC 2004 — All rights reserved


Copyright International Organization for Standardization
Provided by IHS under license with ISO
No reproduction or networking permitted without license from IHS
Not for Resale

1.200340e-002, -2.465074e-002, -3.157543e-003, 3.945325e-002, -1.147366e-002, -2.882683e-002, -6.683999e-004, 8.310597e-003, 1.997903e-003, -1.066137e-002, -3.453626e-003, -3.088674e-003, 1.143361e-003, 1.652587e-002, -2.906933e-002, -8.281514e-003, 2.037433e-002, 2.403128e-003, -1.247395e-002, -1.917905e-002, 2.710053e-002, 5.734637e-002, -3.680080e-002, -1.466677e-002, 7.645646e-003, 8.153465e-003, -2.454008e-002, 8.420299e-003, -3.854178e-003, 9.697458e-004, 9.229376e-004, -1.098278e-002, -1.134368e-003, -4.562435e-003, -4.206868e-003, -3.769292e-003, 1.154733e-002, 2.090364e-002, -1.756868e-002, -2.449321e-002, 1.994750e-002, -1.912973e-002, -2.949198e-002, -2.628972e-002},
{3.214237e-003, 4.955768e-003, 4.588529e-004, -2.109013e-002, 6.185417e-003, 1.205948e-002, -2.583930e-002, 1.059852e-001, -5.932689e-002, 2.153847e-003, 2.956621e-002, -4.827821e-002, -4.827821e-002, 2.956621e-002, 2.153847e-003, -5.932689e-002, 1.059852e-001, -2.583930e-002, 1.205948e-002, 6.185417e-003, -2.109013e-002, 4.588529e-004, 4.955768e-003, 5.719829e-003, 1.205820e-002, 4.060792e-002, 6.702025e-002, -9.233030e-002, 7.829829e-002, 1.242514e-002, -3.169579e-002, 5.066687e-003, 3.527720e-002, -1.052763e-003, -1.394011e-002, 2.671561e-002, 2.924987e-003, 1.347762e-002, 2.524422e-002, -4.988209e-002, -4.534881e-003, 1.424849e-001, -5.575529e-002, 1.442752e-002, 1.313581e-004, -1.364964e-002, 1.309382e-002, -3.954498e-002, -8.604269e-002, 1.753941e-003, 3.172936e-002, -3.863041e-002, 2.424330e-002, 3.444263e-002, 3.812652e-002, 5.063849e-002, 4.027431e-002, 2.266880e-002, 7.082931e-002, 1.385940e-002, -3.969003e-002, -8.978399e-002, 2.183794e-002, 9.873905e-002, -4.450619e-005, -8.104186e-002, 3.601840e-002, 1.995906e-003, 9.885072e-002, -3.331776e-002, 1.047037e-002, -6.455178e-003, -8.140266e-002, 9.237364e-002, -7.573047e-002, -4.955514e-002, 2.220169e-002, -4.261030e-002, -4.255610e-002, 7.795761e-003, -2.713598e-003, -4.196206e-002, -1.811995e-002, 1.187204e-002, -3.561326e-002, -7.122271e-002, -5.084373e-002, 5.961264e-003, -7.829960e-003, 6.628040e-003, 5.715401e-002, -1.309468e-001, 8.818910e-002, 6.315951e-002, 2.689839e-002, -1.096196e-001, -8.979680e-002, -1.591675e-002, -3.432234e-002, -5.507500e-003, 3.724260e-002, -4.522783e-002, -3.826463e-002, -1.715130e-002, 3.185427e-002, 4.315616e-002, 3.532406e-002, 4.380235e-002, -1.950176e-002, 5.570308e-002, 5.628734e-002, 1.668174e-002, 1.303560e-002, -1.431766e-001, 1.492604e-001, -1.169551e-002, -1.881419e-002, 1.581623e-001, -5.361878e-002, 1.590734e-001, -7.216139e-003, 2.326347e-002, 1.885703e-002, -5.824044e-002, -4.286730e-003, 1.293275e-002, 2.744301e-002, 4.748203e-002, 1.434754e-002, -1.351890e-002, -6.431988e-002, 1.168489e-003, -6.812500e-002, -4.291816e-002, -1.787918e-002, -3.796202e-002, 3.174058e-002, -4.778222e-002, -4.213963e-002, -1.146651e-001, 1.059169e-001, -7.621319e-003, 1.842701e-003, -1.165331e-002, 1.483701e-002, -2.068733e-002, 4.527831e-002, 4.323174e-002, 2.538006e-002, -2.005000e-002, -2.953314e-003, 1.171416e-002, -2.964089e-002, 1.136581e-002, -1.848332e-002, 7.187548e-002, 2.385593e-002, 7.156711e-003, -2.827912e-003, 3.891600e-002, 7.429960e-002, 3.567852e-002, -3.704162e-002, 7.754104e-002, -3.954708e-002, -2.616915e-002, -1.134051e-002, 3.023649e-002, 4.725820e-002, 1.577710e-002, 3.643562e-002, 4.259006e-003, -1.772738e-002, -3.133484e-003, -1.641708e-002, -7.188086e-003, -2.851137e-002, 1.891742e-002, -2.630903e-002, 2.951105e-003, 8.158809e-003, -3.452286e-002, 1.072733e-001, -5.463959e-002, 8.166765e-002, -7.548995e-004, -2.856063e-002, 1.411574e-002, 8.023039e-003, -5.054741e-005, 1.221348e-002, -5.484146e-002, 1.144610e-003, 2.963568e-002, -2.012346e-003, -2.646047e-002, -1.407857e-002, 6.807966e-003, -2.455545e-003, 1.830276e-002, -3.240319e-002, -2.182780e-002, -7.238276e-003, 4.906248e-002, -1.656570e-002, 5.419084e-002, -5.755851e-002, 1.428988e-002, 6.273543e-002, -8.782098e-002, 6.031521e-002, -3.382473e-002, -2.708809e-002, -5.051823e-002, -1.293569e-002, 2.189060e-002, 3.035665e-002, -1.559980e-002, -6.160285e-003, -1.050192e-002, -5.022550e-003, 2.270208e-002, 3.672227e-003, 2.850110e-002, 4.009139e-002, -3.120598e-002, -1.655508e-002, 2.679481e-002, -2.216921e-002, 7.840788e-002, 2.717896e-002, 2.929889e-002, -3.240393e-003, 2.610426e-002, -5.546606e-002, 5.254855e-003, 1.635799e-002, 1.131195e-003, 1.475095e-002, -9.796747e-003, 4.233260e-003, -6.654188e-003, -2.052666e-002, 4.114733e-003, 1.571912e-002, -6.651743e-003, -1.795877e-002, 9.075109e-003, 2.871211e-002, -4.444637e-002, 8.996820e-004, -9.863449e-003, 6.516052e-002, 2.211633e-002, -1.959006e-002, 1.254820e-002, -2.216963e-002, 1.694506e-002, 4.231396e-002, -2.054779e-003, -3.023362e-002, -1.143638e-003, 5.949216e-003, -1.588219e-002, 1.448880e-003, -5.183800e-003, -1.131777e-002, 1.176151e-002, 1.713482e-002, -8.778675e-003, 2.709508e-002, 1.698799e-002, 1.929969e-002, -2.893526e-002, 2.786098e-002, 6.364729e-003, 4.955722e-004, 1.377133e-002, -2.867902e-002, 2.431634e-002, -1.380810e-002, -8.650565e-003, -7.518823e-003, 3.081396e-002, 1.544523e-002, -2.067800e-002, -6.065000e-003, -5.717856e-003, -4.222335e-003, -3.870282e-003, -3.998924e-003, -2.460903e-003, -1.584395e-003, 1.914949e-002, 1.293673e-002, -5.008497e-002, 3.604147e-002, -4.431733e-003, 1.584747e-002, 1.740811e-002, -7.178703e-002, 6.304362e-002, -5.128866e-002, -3.526611e-003, 2.395857e-002, 3.956315e-002, 3.889901e-003, 4.163822e-004, -2.303198e-003, -7.751131e-003, -1.394156e-003, -6.931591e-003, -9.269564e-003, 1.416486e-002, 1.435401e-002, -2.170105e-002, 1.097177e-002, 1.781998e-002, 1.319729e-002, -5.744090e-002, 4.606761e-002, -7.613613e-003, 1.064524e-016, -2.267241e-003, 6.645438e-003, -3.403895e-003, 4.421649e-003, -1.984814e-002, -1.819417e-002, 2.148674e-002, 3.810297e-002, -2.737522e-003, 8.414993e-003, 3.100314e-002, -3.100314e-002, -8.414993e-003,


© ISO/IEC 2004 — All rights reserved

Copyright International Organization for Standardization
Provided by IHS under license with ISO
No reproduction or networking permitted without license from IHS
Not for Resale

2.737522e-003, -3.810297e-002, -2.148674e-002, 1.819417e-002, 1.984814e-002, -4.421649e-003, 3.403895e-003, -6.645438e-003, 2.267241e-003, -1.418652e-002, -1.739355e-002, 3.797614e-002, -2.299023e-002, 4.883464e-002, -9.521851e-002, -8.542597e-004, 1.377102e-002, 1.782955e-002, 2.133499e-002, 4.069651e-002, 3.062930e-002, 5.970057e-002, 7.630402e-002, 3.879722e-003, -2.300927e-002, -4.753762e-003, -4.605494e-002, -2.176089e-002, 1.159438e-002, -3.647613e-002, 5.603007e-003, 4.025417e-003, 1.336620e-003, -4.382437e-002, 1.565151e-002, -5.121663e-002, 4.883089e-002, -1.071053e-002, -4.284592e-002, -3.187182e-002, -3.587890e-002, 2.961619e-003, -1.242339e-002, -3.719512e-002, -2.121111e-002, 1.271429e-002, -7.054198e-003, -3.029486e-002, -4.446829e-002, -5.440660e-003, 1.900644e-002, -4.264315e-002, -1.892486e-004, -2.591897e-003, 2.713451e-002, 1.922195e-002, 3.528324e-002, -7.535848e-003, 4.437828e-002, 8.221687e-003, -7.382253e-002, 4.267576e-003, -9.515103e-002, -1.634381e-002, -4.683004e-003, 1.631855e-002, 6.883258e-003, -4.505767e-002, -6.785706e-003, 8.923300e-002, 8.144233e-002, -1.258816e-002, 3.453290e-002, -1.099092e-001, 8.751800e-002, 8.517413e-003, 4.731602e-002, -1.211543e-003, 2.621703e-002, 6.812981e-002, 5.879117e-002, -3.408130e-002, 1.628423e-002, 6.237329e-002, 3.171486e-002, 1.013539e-001, -3.739541e-002, -5.591930e-002, -9.550837e-003, -2.751444e-003, 2.236530e-002, 4.137067e-002, 2.934724e-002, -1.120139e-002, 1.629181e-002, 3.006631e-003, 9.577449e-002, -3.757321e-002, 9.975497e-003, -4.882817e-002, 2.872729e-002, -1.110453e-002, -8.771569e-002, 5.612204e-003, 5.363784e-002, -6.860770e-002, -2.597948e-002, -6.698571e-003, 4.023836e-004, -1.558753e-002, -4.218913e-003, 1.745859e-002, 3.466976e-002, -6.591722e-003, -8.640443e-003, 1.254832e-002, -1.347606e-003, -1.147309e-001, -9.311031e-002, -5.114214e-002, 1.001997e-002, -6.803494e-002, 9.999296e-002, 5.038823e-002, -8.572999e-002, -2.973257e-002, -8.962150e-002, 1.615297e-001, 2.323792e-002, -1.634169e-002, -6.971297e-003, -4.049449e-002, -3.354738e-002, -1.583744e-002, 2.183480e-002, 4.502188e-003, 1.266503e-002, 4.014370e-002, 3.676218e-002, 2.073133e-002, 5.373395e-002, 2.578371e-002, -5.175111e-003, 1.593033e-002, -1.923756e-002, -2.754966e-002, -3.623324e-002, 1.178297e-001, 4.642843e-002, 2.676110e-002, 6.539347e-003, -6.208360e-002, -1.606000e-002, 2.353477e-002, 2.079732e-002, -1.093297e-002, 1.060915e-002, -3.194496e-003, -1.660517e-003, 6.369933e-003, -2.226277e-002, -4.397853e-002, -1.679835e-002, 6.036865e-003, 2.280448e-002, -2.111458e-002, -4.597199e-002, 1.783059e-002, 1.498681e-002, -9.944868e-002, -3.553038e-002, -5.270993e-002, -1.590573e-002, 5.768762e-003, -1.010178e-002, 6.203080e-002, 1.708202e-002, 9.953417e-003, 2.942236e-002, 6.387564e-004, -2.763605e-002, -5.322549e-002, -3.592865e-003, 8.911263e-003, -3.175196e-002, -2.466468e-002, -4.350716e-003, 1.951798e-002, 5.429903e-002, -8.774548e-003, 3.994781e-002, 1.867383e-002, 1.057552e-002, -1.984950e-002, -3.024270e-002, 2.902642e-002, 2.668694e-002, 3.343291e-002, -7.847509e-002, 5.252015e-004, -5.620739e-003, -1.376343e-002, -9.333677e-003, -1.194122e-002, 2.855952e-002, -2.876741e-003, -2.435095e-003, -1.274362e-002, -2.940531e-002, -4.047174e-002, -1.480058e-002, -2.290987e-002, 3.940382e-002, -4.744001e-003, 1.359025e-002, 1.107039e-002, -1.276994e-002, 6.361607e-002, -1.468326e-002, -3.199297e-002, -3.313486e-002, 1.773104e-002, -1.389430e-002, -1.850058e-002, 8.656813e-003, 2.042164e-002, 7.693783e-003, -1.101780e-002, -2.529371e-002, -1.743310e-002, 1.418845e-002, 8.069597e-003, -2.294177e-002, -3.527705e-002, 3.106440e-002, 3.909238e-002, -5.457128e-002, -3.264167e-002, 1.156572e-001, 1.042384e-001, -3.510984e-002, -2.321597e-002, 1.858478e-002, 4.014250e-002, -5.142055e-003, -3.129442e-002, -1.358515e-002, 1.704334e-002, -1.456276e-002, -6.441327e-003, 1.090403e-002, -6.117974e-003, -1.166985e-002, -1.411736e-002, 3.246831e-003, 7.976779e-003, -2.389632e-002, 7.623810e-003, 1.183491e-002, 3.015061e-002, 3.756383e-003, -3.350833e-002, 1.786908e-002, 6.099125e-003, 8.335275e-003, 2.843087e-002, -1.500631e-003, -1.490511e-002, -7.281004e-004, -1.922395e-002, -2.018970e-002, -4.647401e-003, 1.555989e-002, 1.146914e-002, 2.410298e-003, -6.179932e-003, 1.338305e-003, -1.799761e-003, -2.386203e-002, 1.863008e-003, 1.132310e-002, 2.104563e-002, -2.164695e-002, -9.692981e-003, 6.302014e-002, 3.451732e-002, -4.087565e-003, 1.356715e-002, -4.323600e-002, 1.806317e-002, 1.982051e-002, -2.207824e-002, -1.220378e-002, -2.330121e-003, 1.201381e-003, -3.406717e-003, -1.477707e-003, 8.182817e-003, -3.237981e-003, -6.122821e-003, 6.060828e-003, 1.256867e-002, -1.885792e-002, 7.972033e-003, 2.300118e-002, -1.064201e-002, -1.441472e-002, 5.341843e-002},

{1.429236e-003, -1.217576e-002, 2.056204e-002, -5.061544e-002, 1.076547e-002, 6.644694e-002, -4.803690e-002, -3.331363e-002, 5.989569e-002, -4.427217e-002, -1.583434e-002, 1.384920e-002, 1.384920e-002, -1.583434e-002, -4.427217e-002, 5.989569e-002, -3.331363e-002, -4.803690e-002, 6.644694e-002, 1.076547e-002, -5.061544e-002, 2.056204e-002, -1.217576e-002, 5.506954e-003, 1.285995e-002, -1.886371e-002, -5.176648e-002, 8.919568e-003, -2.231731e-002, 5.745151e-003, 2.030914e-002, -6.022894e-002, 7.516870e-002, 2.536317e-002, -3.901347e-002, 9.647170e-002, 6.175247e-002, -1.195026e-002, -9.826188e-002, 3.360120e-002, 8.523824e-002, -7.550047e-002, 5.758066e-002, -5.767889e-002, 1.191295e-003, -3.568983e-002, -2.172827e-002, -5.900002e-002, 1.106685e-002, 6.147625e-003, -1.930718e-001, 6.422794e-002, 8.559882e-002, -9.948272e-002, 4.786980e-002, 5.212791e-002, 2.914123e-002, 1.745950e-003, -9.410055e-002, -5.891815e-002, -7.661253e-003, -1.442892e-002, -8.269789e-002, -7.766336e-003, 3.824075e-002, -6.487494e-002, -1.076902e-001, 2.932058e-002, 1.110486e-002, 8.689127e-002, 3.574713e-002, 3.527152e-002,

© ISO/IEC 2004 — All rights reserved


Copyright International Organization for Standardization
Provided by IHS under license with ISO
No reproduction or networking permitted without license from IHS
Not for Resale

4.293309e-002, 1.852827e-002, 7.538679e-002, -2.475621e-002, 7.269433e-002, 4.483680e-004, 3.498753e-002, 8.476289e-003, 1.035003e-002, -4.579594e-003, -3.781931e-002, 4.122779e-002, 5.829385e-002, 1.562800e-002, 2.516503e-003, 1.228221e-002, 6.698439e-002, 2.837192e-003, 2.876090e-002, 3.562295e-002, -2.514407e-002, 1.886211e-002, 8.066888e-002, -3.543904e-002, 5.812813e-002, -1.151677e-002, 2.225911e-002, -5.316773e-004, 2.427891e-002, -4.823855e-002, -1.112656e-002, 4.602432e-003, 5.112136e-002, 6.030224e-002, 3.242279e-002, 5.493213e-002, 1.878625e-002, -1.132935e-002, -2.858832e-002, -2.540718e-002, -1.503107e-001, 8.672826e-002, -4.272650e-002, -6.973332e-002, -6.421717e-002, 8.342739e-002, 4.600913e-002, -6.347942e-002, -2.987577e-002, 2.186841e-002, -3.038427e-002, -5.396083e-002, -5.494554e-004, 2.797590e-002, 2.692722e-002, -2.922360e-003, 1.082824e-002, -3.959425e-003, -9.038948e-004, 9.509586e-003, 9.917928e-002, 7.423428e-002, -5.890980e-003, 1.369495e-001, 7.266815e-002, -6.565161e-002, 9.373649e-002, 6.024710e-002, 1.325127e-002, 4.778779e-002, -5.259699e-002, 5.381780e-002, -6.569302e-002, 6.269472e-004, 7.384030e-002, 5.395192e-002, 5.306243e-004, -3.096560e-002, -5.438871e-003, 1.834775e-003, 2.056853e-003, 1.392994e-002, 8.883614e-003, -6.199859e-002, -1.222397e-002, -5.907994e-002, 6.475619e-002, -2.010443e-002, 4.174597e-002, 3.277026e-002, 3.876249e-002, -3.671700e-003, -4.846161e-003, 7.144978e-002, -1.556325e-002, 3.132386e-002, 1.601382e-002, 2.373757e-002, 1.886029e-002, -1.879565e-002, -1.041426e-002, -4.681600e-003, -8.031551e-003, -1.192167e-002, 2.870347e-002, 1.758378e-002, -1.977053e-002, -6.071274e-002, -7.967644e-002, -1.196696e-002, 3.866807e-002, -1.153499e-001, -5.982771e-002, 5.057727e-002, 5.039997e-002, 2.710468e-003, 1.792958e-002, 1.167910e-002, -5.622826e-002, -8.334896e-004, -1.463598e-002, -9.358668e-003, 5.681614e-003, -5.665161e-003, -2.502583e-002, -1.677133e-002, 6.958975e-003, -5.929672e-003, 3.399437e-002, -3.953097e-002, 2.585171e-003, 8.769011e-002, -2.302905e-002, -4.314214e-002, -1.417349e-002, 6.178916e-002, -6.013644e-003, 3.187405e-002, 5.661736e-002, -4.689587e-002, 1.304463e-002, 8.617903e-003, -4.631404e-002, 1.156191e-002, 9.373327e-003, -7.793911e-003, 2.151858e-002, -1.482271e-002, -2.825028e-002, -4.430999e-002, 7.865457e-003, -9.960876e-003, -2.024706e-002, -9.006819e-003, 2.022979e-002, 1.037550e-002, -1.627643e-002, -6.910610e-002, -1.118720e-001, 9.608267e-002, 1.288553e-002, -3.958012e-002, 1.830167e-002, -9.108169e-003, 1.020408e-002, 1.520834e-002, -2.412883e-002, -4.570931e-003, 8.066729e-003, -1.785529e-003, -1.751366e-003, -2.676530e-002, -1.679724e-002, -2.416061e-002, -1.768125e-003, 2.186634e-002, 2.185178e-003, 3.339202e-003, -8.505910e-003, -6.960192e-003, 3.305641e-002, 6.099471e-002, -3.906672e-002, 3.470327e-002, 2.603696e-004, -5.174806e-002, 5.417098e-002, -1.297459e-002, 3.782266e-004, -2.649387e-004, -5.397396e-003, 7.546233e-003, 7.083063e-003, -3.240388e-003, -2.031397e-003, -3.057923e-002, -1.830359e-002, 8.079513e-003, -6.015081e-003, 2.172121e-002, 3.164470e-003, 1.751468e-002, -1.686218e-002, -3.034966e-002, 5.348473e-002, -1.316353e-002, 4.294651e-002, -2.114093e-002, -2.593541e-002, 1.017760e-002, -3.227463e-003, -1.174114e-002, 2.376396e-002, 1.055504e-002, -9.247057e-003, -2.793709e-003, 8.424098e-003, -3.391738e-003, -2.923118e-002, -3.116609e-003, -1.455862e-004, 1.613117e-002, 1.294592e-003, -4.889614e-004, -2.021093e-002, 1.744559e-002, -4.955538e-003, -1.850037e-002, 4.357733e-002, 2.260902e-002, -4.531930e-002, 2.979173e-002, -1.585418e-002, -4.629063e-004, 1.550717e-002, -1.024339e-003, 3.111662e-004, 6.554689e-003, 1.165380e-003, -2.429765e-003, -2.505344e-003, -1.007648e-002, -2.122846e-002, 1.128792e-002, 1.400492e-002, -6.050806e-003, 1.590413e-003, -2.266882e-002, 3.243807e-002, -1.115278e-002, 6.000455e-017, -3.599047e-003, -3.279756e-003, -3.757330e-003, -6.434020e-003, 4.513418e-002, -1.076634e-002, -2.177714e-002, 1.723266e-002, -5.106665e-002, -3.519155e-003, 1.132902e-002, -1.132902e-002, 3.519155e-003, 5.106665e-002, -1.723266e-002, 2.177714e-002, 1.076634e-002, -4.513418e-002, 6.434020e-003, 3.757330e-003, 3.279756e-003, 3.599047e-003, 3.554303e-002, -2.985346e-002, -1.613110e-002, 2.302842e-002, -4.179818e-002, -3.654420e-002, -3.330383e-003, -4.306326e-002, -6.383915e-002, -1.790186e-002, -1.776548e-002, -1.876214e-002, -4.063689e-003, 3.437043e-002, 3.738195e-002, 2.065176e-002, -2.855463e-002, 5.928785e-002, -1.165694e-002, 5.352791e-003, -6.511296e-002, 8.279697e-002, -3.165638e-003, -2.601871e-002, 9.304006e-002, -1.307819e-002, 5.845547e-002, -3.222870e-002, -1.299756e-002, -7.118266e-002, -6.645869e-003, 1.755005e-002, -3.724284e-003, 6.153522e-003, -3.303219e-002, -4.296605e-002, -5.234195e-002, -3.557531e-002, -2.461652e-002, 5.349050e-002, -2.855598e-002, -6.162636e-002, -4.541064e-002, 2.465711e-002, 4.976972e-003, -2.414374e-002, -7.917393e-003, -3.073955e-002, 3.625732e-003, 2.860384e-002, 1.341544e-001, -1.099637e-001, 3.986505e-002, 1.266220e-002, 2.786645e-002, 3.078894e-002, -3.126009e-002, -1.595094e-002, -1.283372e-002, -2.222012e-002, 2.651509e-002, 4.504159e-002, 2.735298e-002, 2.454035e-002, -5.825529e-002, 1.125530e-004, 1.211161e-001, -3.514565e-002, -1.845878e-002, 7.858114e-003, -3.600219e-002, 2.833553e-002, -1.066987e-001, 2.921409e-002, 1.564971e-003, -3.826837e-003, -9.923511e-003, -2.268514e-002, -2.965538e-003, 3.688271e-002, 8.695923e-003, 7.255545e-003, -1.808067e-002, -3.973230e-002, -1.004680e-002, 2.601460e-002, 4.918109e-004, 2.761412e-002, -3.655907e-002, 9.262737e-003, -1.276435e-002, -3.665420e-002, -4.680470e-002, -4.003225e-002, 6.616938e-002, -4.672037e-003, -1.830745e-002, -8.852309e-002, 4.853348e-002, 1.390478e-002, -4.649918e-002, -2.420929e-002, -3.296771e-002, -1.394141e-002, -2.073892e-002, 1.590070e-002, 3.214255e-002, -1.478247e-002, -8.065608e-003, 3.572454e-002, 6.125478e-003,


© ISO/IEC 2004 — All rights reserved

Copyright International Organization for Standardization
Provided by IHS under license with ISO
No reproduction or networking permitted without license from IHS
Not for Resale

6.260388e-002, -2.192890e-002, -7.918707e-003, -5.240185e-002, 4.653168e-002, -3.603909e-002, -1.556320e-001, 5.306386e-002, -4.318801e-002, -2.452317e-002, -3.086563e-002, -2.935635e-002, -4.359627e-002, -3.367452e-002, -2.220303e-002, -4.380216e-003, -1.099293e-002, 9.803736e-003, 1.019556e-002, 1.047053e-003, -3.948057e-003, 6.364089e-002, 2.653994e-002, 4.163987e-002, -1.220937e-002, 1.305985e-001, -1.166953e-001, 3.985225e-002, 6.240083e-002, -9.339639e-002, 7.462839e-002, -1.182861e-001, -3.878872e-002, 2.288897e-002, -1.536922e-002, 2.479146e-002, 2.890426e-002, 4.373285e-003, 1.620180e-002, -1.144439e-002, -2.654420e-002, 3.998469e-003, 9.206733e-003, -1.105940e-002, 1.150986e-002, -2.730546e-002, -1.312772e-001, -1.356708e-002, 2.088815e-002, 8.636583e-002, -9.909322e-003, -7.232858e-002, -2.277418e-002, -4.290319e-002, 2.562650e-002, 4.211238e-002, -3.044615e-002, 1.881422e-002, 8.234791e-003, 2.269628e-002, -1.155777e-002, -2.049706e-002, 1.250585e-002, -2.613674e-002, -9.908573e-003, 1.103443e-002, 3.417239e-002, -2.534787e-002, -4.414918e-002, 3.377654e-002, 8.562722e-003, -1.049781e-001, 9.435276e-002, -1.987810e-002, 8.928535e-003, -5.401131e-002, -1.014141e-002, 6.455989e-003, -2.191972e-002, -1.783196e-002, -2.356929e-002, 4.069547e-002, -7.076505e-003, 2.049454e-002, 2.625548e-002, 2.266534e-002, 2.258212e-003, -3.748843e-002, -1.487128e-003, 1.719786e-002, 4.544411e-003, -5.088414e-002, 2.991209e-002, -9.462974e-003, 2.470217e-002, -1.251654e-002, 1.143283e-002, -3.313162e-003, -1.595447e-002, 2.235681e-003, 1.470677e-002, -3.282508e-002, 1.636657e-002, -7.266448e-003, -6.133385e-003, 3.527933e-002, 3.221360e-003, 1.205494e-002, 1.828108e-002, 3.071910e-003, -7.074103e-003, -2.619220e-002, -2.376268e-002, 4.549257e-003, -3.879088e-002, -4.061485e-003, 2.993248e-002, -5.344230e-002, -1.505958e-002, -1.829691e-002, -7.008586e-002, 3.541890e-004, 3.060350e-003, 8.951329e-003, 2.860131e-002, -1.947444e-002, 3.867923e-003, 7.562274e-003, -4.039811e-003, 2.040118e-002, -2.380915e-003, 1.948129e-002, 1.294557e-002, -7.237881e-004, -1.755659e-002, -1.797784e-003, -1.057183e-002, -1.786160e-002, 1.837849e-002, 4.743969e-002, -6.831691e-002, -5.536564e-004, -6.489539e-002, 4.077967e-002, -3.022551e-002, -7.750677e-003, 1.449275e-004, -7.445720e-003, 8.210535e-003, 8.840774e-003, -1.258775e-003, -1.000283e-002, 2.253252e-003, 8.103943e-003, -1.646259e-003, 9.305571e-003, -3.252828e-003, -1.914010e-002, -2.721724e-002, 1.374508e-002, -2.054677e-003, -2.192202e-002, -2.795943e-003, 8.169578e-003, 1.628099e-003, -4.904868e-003, 1.021937e-003, -2.480455e-002, -3.965901e-003, -6.791486e-004, 5.212482e-003, 6.997004e-003, 5.853981e-003, -5.055075e-003, 1.188079e-002, -8.378714e-003, -1.575979e-002, 3.671901e-003, 9.650455e-003, 2.987984e-003, -1.637276e-002, -1.896884e-002, 3.697154e-003, 4.033590e-003, -1.875276e-002, 4.088037e-003, -2.648243e-002, -5.933528e-003},

{2.255785e-004, 1.070157e-002, -2.888270e-003, -5.729627e-003, -1.154514e-002, 6.590026e-002, -5.100022e-002, -1.211833e-003, 2.504234e-002, 1.300691e-002, -1.934743e-002, -2.749594e-002, -2.749594e-002, -1.934743e-002, 1.300691e-002, 2.504234e-002, -1.211833e-003, -5.100022e-002, 6.590026e-002, -1.154514e-002, -5.729627e-003, -2.888270e-003, 1.070157e-002, 4.092184e-003, -2.876044e-002, 3.501505e-002, -1.798493e-002, 5.681947e-003, 2.070465e-002, -2.397334e-003, 6.185532e-002, -7.514289e-003, -3.987959e-002, -4.417068e-002, 7.781088e-003, -1.200144e-002, 1.297929e-002, -3.761172e-003, -2.656255e-002, -5.250466e-002, -3.708748e-002, 1.079977e-001, -3.607658e-002, -2.429599e-002, 3.456836e-002, 2.997879e-002, -6.832370e-002, 7.974940e-002, -9.901973e-002, 9.821429e-005, 8.206376e-002, -1.248672e-001, 3.560466e-002, 2.046167e-003, 2.852855e-002, -3.295047e-002, 3.557305e-002, 5.606780e-002, 1.112372e-002, -4.780156e-002, -1.833554e-004, 4.809815e-002, -2.902654e-002, -6.475675e-003, -2.315052e-002, -4.680755e-002, 9.992102e-002, -4.687004e-002, -5.486876e-002, -6.717209e-002, -6.543016e-002, -4.667031e-003, -1.526120e-001, 3.998333e-003, 2.453698e-002, 9.628947e-003, -2.297075e-002, -3.534328e-002, -1.012124e-002, -3.877352e-002, -3.281653e-002, -3.954979e-002, 1.463316e-002, 3.419588e-002, 3.378634e-002, 3.160715e-002, 2.230464e-002, 5.671041e-003, -2.960240e-002, -5.670523e-002, -1.957596e-001, -7.545946e-002, -3.838181e-002, -3.889548e-002, -6.849535e-002, -5.184710e-003, -2.360689e-002, -3.917158e-002, 3.807302e-002, 2.109098e-002, 4.565457e-002, 9.188950e-003, 4.768508e-003, 1.319527e-003, -4.117222e-002, -7.374917e-002, -5.418809e-002, -3.809178e-002, 1.752281e-002, -7.093506e-002, -2.478109e-002, 4.117307e-003, 4.114311e-003, 6.528679e-003, 5.947529e-002, -3.647945e-002, 9.385821e-002, 1.808185e-001, -2.421693e-002, 1.181142e-002, -1.286489e-002, -5.170891e-002, -3.268346e-002, -7.446850e-003, -2.231023e-003, -1.450606e-003, 1.296615e-003, 1.121287e-002, 8.848224e-003, -1.870646e-002, 2.466208e-002, 1.963671e-002, 6.789369e-003, 5.707285e-004, -4.294310e-002, -4.188070e-002, 9.581274e-002, -4.944734e-002, -7.674371e-002, 6.316005e-003, -7.007613e-002, 4.060096e-002, -6.433910e-002, 5.777792e-002, 5.225076e-002, -1.125892e-002, 3.865536e-003, -8.573377e-003, -2.006567e-002, 1.603907e-003, -4.755302e-004, 1.268305e-002, 4.720102e-002, -1.812810e-002, -5.711871e-003, -7.236460e-003, 3.640658e-002, 7.039811e-002, -2.662494e-002, -6.511022e-002, -4.365140e-002, 5.410909e-002, 1.046162e-001, -5.382843e-002, -9.789417e-003, -1.998717e-002, -6.065757e-003, -5.249224e-002, 1.519451e-002, 1.248684e-003, -4.940260e-002, 2.518867e-003, 1.420506e-002, -1.075738e-002, -2.205474e-002, -3.448415e-003, 1.802763e-002, -1.517468e-002, -2.507377e-002, 1.644672e-002, 2.284259e-002, -5.984525e-002, 6.204793e-002, 8.230424e-002, 7.888675e-002, -1.461435e-001, 8.677697e-002, -4.683292e-002, 1.600317e-002, 1.357307e-002, 2.122556e-002, -3.767219e-003, -

© ISO/IEC 2004 — All rights reserved


Copyright International Organization for Standardization
Provided by IHS under license with ISO
No reproduction or networking permitted without license from IHS
Not for Resale

2.947565e-002, -2.774515e-002, -4.341515e-003, 4.720132e-002, -6.220517e-003, -1.153141e-002, 1.290847e-002, -3.276739e-003, -5.467668e-003, 3.843561e-002, 4.638798e-002, 4.625347e-002, -3.609302e-003, -6.077634e-003, -4.977187e-003, 4.464935e-002, -2.881218e-002, 3.451743e-002, -2.613317e-002, -4.223214e-002, -3.364479e-003, -3.607915e-002, 2.473052e-002, -1.073227e-004, -1.458138e-002, 3.131885e-002, 2.368880e-002, 5.545394e-003, -1.374432e-004, -9.154615e-003, 3.400098e-003, 1.128671e-002, -1.014720e-002, 9.377451e-003, -4.829585e-004, -5.957507e-002, -2.724054e-003, 3.700287e-002, 3.272969e-003, 6.962208e-002, 5.649035e-003, -7.030503e-003, 3.594357e-003, -3.771075e-002, 5.135178e-002, 1.488638e-002, -1.055312e-002, 1.131659e-002, 3.678734e-002, 3.226950e-002, 2.720530e-003, 6.637109e-003, 8.241083e-003, -1.790120e-002, -5.434973e-003, 4.341853e-002, -1.032696e-002, -3.182201e-002, -1.907938e-002, -1.540290e-002, -3.083755e-002, 2.568585e-002, -2.645491e-002, 5.672674e-002, -3.482803e-002, 2.382147e-003, 1.909394e-002, -3.889079e-002, 1.158717e-002, -1.571411e-002, 2.117096e-002, 3.713700e-002, -9.592996e-004, -2.662063e-003, 2.853553e-003, -1.205375e-003, 1.699813e-003, -5.522800e-003, -1.831437e-002, 2.077571e-002, 4.056870e-003, -5.744698e-002, -4.578084e-002, 2.609102e-002, 3.824158e-002, 2.115092e-002, -4.867263e-003, 2.743033e-002, -1.331769e-002, -9.031827e-003, 7.355528e-003, 2.036560e-003, -1.007275e-002, 5.540923e-003, 2.378675e-002, 1.709687e-003, 5.682912e-003, -3.989068e-003, 3.067572e-003, 3.152288e-003, 4.719873e-003, -1.598569e-002, -1.902458e-002, 4.647512e-004, -1.774481e-002, -1.475490e-002, -2.455820e-002, -5.394112e-003, 2.786492e-002, 7.313631e-003, -1.590889e-002, 2.793549e-002, -1.958373e-002, 3.336947e-002, -9.549739e-003, -1.496812e-002, 2.015065e-002, 1.080923e-002, 7.898830e-003, -5.429935e-003, 3.458778e-003, -1.829806e-003, -1.927606e-003, -2.302134e-002, 7.395475e-003, -2.075065e-003, -3.963078e-003, -1.967041e-002, 2.306912e-003, -2.259910e-002, -6.168782e-017, -1.106739e-002, 1.348230e-002, -2.781473e-002, 2.072240e-002, 1.070680e-002, -3.658755e-002, 3.745154e-002, -1.330375e-002, 2.027916e-002, 2.381645e-002, -3.029881e-003, 3.029881e-003, -2.381645e-002, -2.027916e-002, 1.330375e-002, -3.745154e-002, 3.658755e-002, -1.070680e-002, -2.072240e-002, 2.781473e-002, -1.348230e-002, 1.106739e-002, -4.091236e-004, -2.750738e-002, -1.270509e-002, -6.003848e-002, 7.702883e-002, -1.272898e-001, -2.659344e-002, 3.526982e-002, -6.261071e-002, 4.317336e-003, -1.776651e-002, -2.125356e-002, 1.159106e-002, 1.082723e-002, 1.563054e-002, -1.562534e-002, 3.911534e-002, -1.195976e-002, -7.715470e-003, -5.265598e-003, 2.503937e-002, 2.874210e-002, -3.435200e-002, -7.524661e-003, -1.131870e-002, 2.385956e-002, -1.304897e-001, 1.244405e-001, -7.798321e-002, 5.277342e-002, -6.624085e-002, 3.280789e-002, -1.383820e-002, 1.894753e-002, -6.511757e-003, 2.256092e-002, 1.472364e-003, -4.331497e-002, 3.051536e-002, 1.015126e-002, -2.067482e-002, -7.492300e-002, 1.879563e-002, -2.001528e-002, -5.733446e-002, -6.568307e-003, -1.617623e-002, 1.499218e-002, 3.688979e-002, -1.411818e-002, -1.194382e-001, 4.174796e-002, -2.515339e-002, -1.380819e-002, -8.266841e-002, -1.266258e-002, -7.108308e-002, -3.587997e-002, 9.850581e-003, 1.573481e-002, 3.791502e-002, -2.815477e-002, -2.805337e-002, -4.108767e-002, 5.195092e-002, -2.614487e-002, 5.543625e-002, -4.006068e-002, -3.590494e-002, 8.846445e-002, 9.880160e-002, 2.675310e-002, 9.784501e-002, -1.859380e-002, -4.504962e-003, 2.734881e-002, -3.686057e-002, 3.762347e-002, -5.186388e-002, -2.193064e-002, 1.992143e-002, 9.632695e-003, -1.172542e-002, -5.144590e-002, -3.136847e-003, -4.594261e-002, -9.624620e-003, -9.364257e-002, -1.122619e-001, 3.959371e-002, 2.451492e-002, 1.165175e-001, -3.554733e-002, -4.404646e-002, 2.204989e-002, -1.929613e-002, -3.865627e-002, 3.829866e-002, -3.536563e-002, 6.431043e-003, -4.239238e-003, 5.443115e-002, 1.082150e-002, 4.631728e-002, 6.026388e-003, 3.461903e-003, 1.440946e-002, 4.998286e-003, 6.510744e-002, -1.626444e-002, -1.683008e-002, 6.119991e-002, -1.153773e-001, 1.370294e-002, -1.244669e-001, -3.908701e-002, 3.436488e-002, -1.612321e-003, 3.238815e-002, -8.845657e-002, -2.823845e-002, -3.822059e-002, -5.442759e-004, 4.201476e-002, 8.571647e-003, 2.086394e-002, 4.731548e-003, 2.675437e-003, -2.177711e-003, -1.816242e-002, 4.807782e-002, 3.257050e-002, -3.079972e-002, -5.683023e-002, -2.162171e-002, 2.648139e-002, -1.211898e-001, 8.525447e-002, 1.194131e-001, -2.283054e-002, 3.602207e-002, 1.176131e-002, 9.672026e-003, -3.748410e-002, 3.769265e-002, -8.464354e-003, 1.026366e-002, 2.336512e-002, 1.978800e-002, 2.740520e-002, -9.513470e-003, -2.033234e-002, -1.591259e-002, 1.819001e-002, 1.431857e-002, 2.382803e-002, 5.282906e-003, -4.717713e-002, 1.381068e-001, -9.017426e-002, -6.933525e-003, 7.306653e-002, -9.417920e-002, 2.780731e-002, 8.348799e-003, -4.766695e-002, 3.582723e-002, -1.778031e-002, 1.737303e-002, 2.093239e-002, 4.502689e-003, 1.853930e-002, 8.723611e-003, 3.877297e-003, -1.797759e-002, -7.560011e-003, -9.087743e-003, 6.386195e-003, -2.332051e-002, -8.936057e-003, 5.598138e-002, -1.868653e-002, 4.245349e-002, -2.307010e-002, -1.079758e-001, 9.129417e-002, -5.725119e-002, 7.916302e-003, 2.945535e-002, -1.402808e-002, 1.983302e-002, 7.390933e-003, -3.108758e-003, -3.157904e-003, 1.064776e-002, 1.649284e-002, 2.391528e-004, 5.055586e-003, -3.035581e-002, -5.140961e-003, -1.085563e-003, -2.304218e-002, 5.948177e-002, -4.153981e-004, 2.927418e-002, 4.289688e-002, 4.010017e-002, 4.380659e-002, -2.751738e-002, -2.425270e-002, 3.054382e-004, -2.468960e-002, 1.018859e-002, 5.208103e-002, -9.801249e-003, 2.015421e-002, 9.058636e-003, 1.122382e-002, -1.138186e-002, 9.212678e-003, -5.656307e-003, 2.802549e-002, 1.067255e-002, -2.088112e-002, 2.667763e-002, 3.450061e-003, 2.361557e-002, 9.747758e-003, -1.647704e-003, 1.694069e-002, -2.310104e-002, -


© ISO/IEC 2004 — All rights reserved

Copyright International Organization for Standardization
Provided by IHS under license with ISO
No reproduction or networking permitted without license from IHS
Not for Resale

4.741145e-003, 3.764422e-002, -1.111923e-002, -9.269787e-003, 3.186416e-002, -2.176267e-002, 1.861632e-002, 2.296430e-002, 2.475623e-002, -5.332511e-003, -1.577763e-002, -1.168328e-002, 1.327738e-003, -2.112442e-002, -2.159869e-003, 4.231539e-002, -3.561764e-002, 4.924528e-003, 2.763851e-002, -4.763306e-002, 2.047492e-003, 4.706180e-002, -2.035783e-002, 4.807565e-002, -4.700659e-002, 4.412538e-002, -3.050370e-002, -4.298120e-003, 1.979299e-002, -6.579599e-003, 2.437349e-002, 1.013296e-002, 6.093509e-003, -1.224556e-002, 5.275534e-003, 1.217846e-002, -4.635939e-003, 3.869182e-003, 8.901107e-003, 2.322630e-002, 1.126103e-002, -3.427216e-002, 5.576833e-002, -2.225761e-002, -2.958678e-003, -5.096238e-003, 9.411080e-003, 3.816586e-002, -2.915405e-002, 6.871726e-003, 1.772245e-002, -1.712753e-002, 1.580556e-002, 1.089105e-002, 1.245720e-002, -8.966955e-003, -9.934956e-003, -6.333095e-004, -1.444075e-003, 8.869392e-003, -4.226002e-003, 1.434042e-002, 6.469901e-004, -2.380367e-002, 3.625851e-002, -5.098570e-002, -4.138487e-003, 3.973877e-002},
{1.790227e-003, -9.910551e-003, 2.209457e-002, -1.738377e-002, -2.861757e-002, 6.058385e-002, -4.679554e-002, 7.523646e-003, 5.598211e-003, 7.674985e-003, -3.642618e-002, 5.336512e-003, 5.336512e-003, -3.642618e-002, 7.674985e-003, 5.598211e-003, 7.523646e-003, -4.679554e-002, 6.058385e-002, -2.861757e-002, -1.738377e-002, 2.209457e-002, -9.910551e-003, -2.090025e-003, 4.429839e-002, -9.843882e-002, 2.195081e-002, -2.267481e-003, 1.518271e-002, -6.909243e-002, 1.057418e-002, 5.928556e-002, -4.390810e-002, 1.181635e-002, -2.635201e-002, -1.529291e-002, -4.414987e-002, -9.198130e-002, -9.409989e-004, 9.483048e-002, -1.010617e-001, 1.279681e-002, -5.510569e-002, -3.009864e-002, -2.398922e-002, -2.344486e-002, 8.446872e-003, -1.057077e-002, 3.960993e-002, -2.391112e-002, -1.334579e-002, -4.549428e-002, -1.107468e-002, -4.412545e-002, -5.988744e-002, 4.476696e-002, -3.066426e-002, 1.549861e-002, 4.154758e-002, 2.070697e-002, -1.053806e-002, -8.524207e-002, -7.709790e-002, -1.147713e-002, -1.243205e-001, 4.277866e-002, -5.453486e-002, -1.049922e-001, 4.684831e-002, 8.478333e-002, 1.201815e-001, -1.088278e-001, -6.909111e-002, 5.716810e-002, -7.239627e-002, -3.192228e-002, 7.374399e-002, 8.996991e-002, -2.655412e-002, 6.334710e-004, -2.491810e-002, -1.505136e-002, -3.202441e-002, -4.125413e-002, -3.973183e-003, 5.513558e-002, 2.351600e-002, 1.510078e-002, -3.419653e-002, 2.195146e-002, 4.276086e-002, -1.352785e-002, -2.116802e-002, 7.090443e-003, 1.203035e-001, -8.590561e-003, 1.655310e-002, 1.130600e-001, 1.415265e-002, 3.740601e-002, -7.723083e-003, -2.872681e-003, 3.365182e-002, 7.203038e-002, -2.479412e-002, -4.389129e-002, -4.079793e-002, 7.285135e-003, -4.047571e-002, -2.844267e-002, 3.478168e-002, -6.033497e-003, -3.555609e-002, -9.363835e-002, -2.593006e-002, -1.158389e-002, 4.909415e-002, 4.155663e-002, -1.247623e-001, 5.280681e-002, -7.642449e-002, 1.138511e-002, -7.624124e-002, -1.479314e-002, 2.311084e-002, 1.569399e-002, -2.227038e-002, 1.723882e-002, -1.828659e-002, -2.165558e-002, -1.545530e-002, 3.438521e-002, -4.629419e-002, -1.545824e-002, 5.834813e-002, 2.411247e-002, -1.074625e-002, 5.400874e-002, -3.210177e-002, 9.545795e-002, -7.248321e-002, -3.435746e-002, 2.789552e-002, 5.244985e-002, -3.154242e-002, 6.057093e-002, 3.465236e-002, 8.591401e-003, -5.079779e-003, -2.585678e-002, -8.714952e-003, 3.469573e-002, -1.617039e-002, 7.360048e-003, 6.144244e-002, 1.819955e-002, -5.315435e-002, -4.153305e-002, -1.649387e-002, 4.178569e-002, 3.418368e-002, 3.122785e-002, -4.190194e-003, 4.315194e-003, -7.005232e-005, -1.656628e-002, -2.970184e-002, 2.187541e-002, -2.948841e-004, 3.473654e-002, 1.456690e-002, -1.162373e-002, 1.567041e-002, 2.936392e-003, 1.321747e-002, 1.812143e-002, -5.429268e-002, -6.321424e-003, 1.151037e-002, -2.793334e-002, -2.593351e-002, -7.161378e-002, 1.269116e-001, -1.676468e-002, -1.689925e-002, -1.113217e-001, 7.206617e-003, -4.682006e-002, 8.960404e-002, -6.152250e-002, -2.220032e-002, 6.988134e-002, 2.617726e-002, 2.336697e-002, 2.221223e-002, -6.263730e-003, -2.183912e-002, 1.650737e-002, 1.594017e-002, -3.300745e-002, -3.157913e-002, -9.783923e-005, -1.567709e-002, 1.175115e-002, -7.175049e-002, 9.754503e-002, -4.625846e-002, 2.161645e-002, -1.161000e-001, 4.707814e-002, 7.187473e-002, -6.588165e-002, 1.192998e-002, 3.583867e-002, 2.323182e-003, 7.509877e-003, 3.715210e-003, -3.865223e-003, 9.416610e-003, -1.584143e-002, -2.053698e-003, 1.698784e-002, -3.412313e-003, -2.871149e-002, -8.298013e-003, 2.093942e-002, -3.608983e-002, 5.210432e-003, -2.595760e-002, 4.623484e-002, -4.371058e-002, -4.000657e-003, 1.188182e-002, -5.607053e-002, 3.909200e-002, -2.487825e-002, -7.535897e-003, -5.868638e-003, -1.882245e-002, 1.976968e-002, 1.493107e-002, -9.770570e-003, -1.839556e-003, -2.529889e-002, -1.606742e-002, -1.296990e-002, 7.997756e-003, -7.964598e-003, -4.068763e-002, 3.104225e-002, 1.661896e-002, -7.263166e-002, 8.941878e-002, -6.681450e-003, -9.439537e-004, -1.813815e-002, 1.901718e-003, 2.306995e-002, -1.425538e-002, 3.038270e-002, -7.306717e-003, -9.978725e-003, -1.072679e-002, 1.785741e-002, 2.457830e-003, -7.789986e-004, 1.480330e-002, -1.136242e-002, -1.952171e-002, 1.083918e-002, 1.175883e-002, -1.373781e-002, -1.923125e-002, -2.567845e-002, 3.420040e-002, 1.273767e-002, -8.310001e-003, -3.849084e-002, 3.699125e-002, -4.300045e-002, -2.478925e-002, 5.206817e-002, 1.627186e-002, -1.882316e-002, -5.556467e-003, 1.917849e-002, -5.772743e-003, -9.583763e-003, 1.927468e-003, -3.762929e-003, 6.683218e-003, -1.401908e-002, -8.613735e-003, 1.827342e-002, -1.016592e-002, -2.406747e-002, 8.617133e-003, -3.685275e-002, 8.144930e-002, 2.290391e-002, -3.776081e-003, -4.522514e-002, 1.141215e-002, 2.153735e-002, -8.038002e-003, 2.139146e-002, -8.045140e-003, -1.155552e-003, -2.462605e-003, 6.301802e-003, -6.783201e-004, 5.028735e-003, -

© ISO/IEC 2004 — All rights reserved


Copyright International Organization for Standardization
Provided by IHS under license with ISO
No reproduction or networking permitted without license from IHS
Not for Resale

2.239052e-003, -3.901921e-003, -2.561678e-002, 3.214439e-003, 2.643843e-002, -4.339191e-002, -1.471931e-002, 2.593951e-002, -2.186835e-002, 1.833310e-002, 5.600088e-017, 1.909606e-002, -3.003977e-003, -3.903405e-002, -9.385951e-003, 3.009661e-002, -4.176312e-002, 1.151120e-002, 2.534096e-003, 4.038840e-003, 1.194265e-002, -6.914108e-003, 6.914108e-003, -1.194265e-002, -4.038840e-003, -2.534096e-003, -1.151120e-002, 4.176312e-002, -3.009661e-002, 9.385951e-003, 3.903405e-002, 3.003977e-003, -1.909606e-002, 1.488517e-003, 1.894978e-002, 9.818499e-002, 9.074271e-003, -6.691259e-002, 5.328263e-002, -5.325986e-002, -1.535478e-002, 4.830410e-002, -3.090913e-003, 4.030509e-002, 2.034061e-002, 6.177600e-003, 7.563382e-003, -4.321069e-002, 1.021595e-002, -1.735572e-002, 3.477643e-005, 2.776708e-002, -5.986710e-002, 5.596218e-002, -5.110678e-002, -2.578773e-002, 1.493879e-002, 6.894055e-003, 4.176724e-003, 3.378045e-002, 4.098006e-002, -9.811104e-003, -3.905207e-002, -8.703091e-003, -5.940418e-002, -2.281275e-002, -3.153577e-002, 3.852141e-002, -2.163240e-003, -3.106523e-002, 3.215957e-002, 5.068213e-002, 4.853257e-002, 5.474983e-002, 2.920391e-002, -9.393326e-002, -6.178926e-002, 7.302309e-002, 2.256643e-002, 5.658389e-003, -1.428705e-002, 3.105187e-002, -6.374853e-003, 8.533385e-002, -3.781240e-002, 4.160531e-002, 4.805036e-002, 5.212307e-002, 2.767751e-002, 6.669408e-002, -5.527224e-003, -6.599713e-003, -1.311725e-003, -3.377987e-002, 1.764350e-002, 4.121198e-002, 2.677321e-002, -4.777010e-002, 4.369468e-002, -1.823236e-002, 4.173740e-002, 6.134524e-002, 5.868828e-002, 2.548558e-002, 4.781847e-002, 5.005158e-002, 1.262615e-002, 4.544989e-003, 2.407925e-002, -2.337125e-002, -8.561860e-003, 1.186352e-002, -4.435089e-002, 4.948221e-003, 4.778125e-002, 1.277706e-002, -2.576607e-003, -4.673372e-002, -4.406163e-002, 2.218078e-002, -2.573637e-002, -4.131233e-002, 6.056201e-002, -2.987410e-002, -1.044965e-001, -1.172940e-001, 2.524092e-002, -7.230806e-002, -5.559042e-002, -5.936694e-002, 1.445543e-002, -1.004912e-001, 2.170814e-002, 4.172757e-002, 9.699154e-003, 3.043491e-002, -2.899544e-003, -1.842778e-002, -5.297660e-002, -5.647990e-002, -6.845559e-003, 1.828239e-002, 1.023892e-002, 7.965911e-002, 8.545083e-003, -2.227364e-002, -3.560586e-003, -9.625308e-002, 3.422442e-002, 6.865534e-002, -1.275649e-001, 6.771275e-002, 7.711914e-003, 4.733383e-002, 6.615120e-002, -1.745654e-002, -1.361515e-002, -6.865576e-003, -3.575081e-002, -4.299271e-003, 1.685309e-002, 1.028203e-002, -1.615650e-002, 1.497417e-002, -1.501333e-002, 3.130314e-003, 8.679171e-003, 4.253523e-002, 3.890818e-002, -1.054783e-001, 2.369206e-003, 1.455669e-004, -3.663744e-002, -3.947039e-002, -8.180855e-002, -2.067485e-002, 7.992781e-002, -4.960292e-002, 1.273709e-002, 1.137092e-002, -4.499273e-003, -4.273679e-003, 1.259261e-002, 6.684248e-003, -2.035697e-002, -2.417294e-003, 1.992665e-002, 5.713199e-002, -3.871392e-002, -3.020337e-002, 4.804464e-002, -5.327362e-002, 5.668483e-002, 2.836907e-002, 8.521046e-003, -1.146073e-001, 5.734664e-002, -2.756192e-002, 5.562124e-002, 4.638590e-002, 2.424124e-002, 4.729914e-002, 1.832139e-002, 5.334958e-003, -1.161873e-002, -1.830617e-003, -5.817036e-003, 1.730815e-002, -1.553608e-002, 1.836988e-002, 1.909522e-002, -2.049463e-003, 3.534209e-002, -9.014060e-002, 5.007858e-002, -8.310432e-002, 7.035654e-002, -6.033818e-002, -8.009356e-002, 2.443380e-002, -3.300640e-002, 5.287603e-002, 3.346756e-002, -7.398470e-003, -5.015609e-003, 3.024506e-002, -1.359176e-002, 3.695194e-003, -8.935046e-003, 2.445877e-002, -1.583883e-004, 3.491712e-005, -1.528135e-002, -5.582041e-003, 2.161326e-002, -6.763692e-002, 6.437392e-002, 3.837451e-002, -5.789330e-002, 7.661584e-002, -5.857922e-002, -9.269963e-003, -2.078793e-002, -2.934772e-002, 8.780552e-002, -3.993495e-002, -2.194285e-002, 2.462218e-002, -3.648249e-003, 1.678295e-002, -9.995796e-003, 8.472271e-003, 7.788614e-003, 2.232577e-002, -5.706383e-003, -2.785088e-002, 2.371546e-002, 1.429099e-002, 3.233448e-003, -2.494191e-002, 2.169485e-003, 2.009067e-002, -1.301789e-002, -1.859227e-004, -8.005706e-002, 4.464765e-002, 9.051460e-003, 3.189666e-003, 2.118687e-002, -2.590142e-002, -4.564609e-003, 2.924548e-002, 1.151888e-002, 1.223317e-002, -8.345378e-003, -6.257199e-003, 6.074711e-003, 1.439938e-002, -7.261975e-003, -3.713445e-002, 3.895438e-003, 6.321190e-002, -4.979134e-002, 2.892278e-002, 2.560127e-003, 1.570896e-002, -1.795405e-004, -3.672126e-002, -3.832928e-002, 2.409842e-002, 6.025970e-002, -1.358747e-002, -2.154108e-002, -7.908466e-003, 1.566922e-002, -4.264936e-003, -5.341712e-003, -6.610465e-004, 1.074771e-002, -2.017234e-003, 1.478412e-002, -8.455797e-003, -1.134833e-002, 1.963324e-002, -2.834947e-002, 3.058862e-002, 1.638995e-002, -3.659467e-002, 8.153728e-003, 1.851864e-002, -3.253743e-002, -1.441385e-002, 4.878456e-003, 4.868807e-002, -2.893495e-002, -4.513488e-003, 2.024106e-002, 5.646875e-003, -3.119266e-003, -9.404553e-003, 7.133408e-003, -2.723892e-003, 1.286683e-002, 2.525729e-003, -3.932915e-003, 5.520802e-003, -1.339278e-003, 2.963293e-002, -3.552533e-002, -5.137231e-002, 6.822477e-002, -3.499547e-002},

{1.904324e-004, 1.309940e-002, -3.109078e-002, 2.444146e-002, 4.438270e-003, -5.357985e-002, 5.622105e-002, -2.031839e-002, -1.900016e-002, 4.777688e-002, -3.101009e-002, -1.808477e-002, -1.808477e-002, -3.101009e-002, 4.777688e-002, -1.900016e-002, -2.031839e-002, 5.622105e-002, -5.357985e-002, 4.438270e-003, 2.444146e-002, -3.109078e-002, 1.309940e-002, -8.240654e-003, -2.362015e-002, 2.272904e-002, -2.722934e-002, 4.466517e-002, -3.971033e-002, -4.614693e-002, -1.210324e-002, 7.595890e-002, -2.294005e-002, -2.966293e-002, -2.326624e-002, -8.251161e-003, 5.589913e-002, 3.434909e-002, 1.963261e-004, -7.017811e-003, 5.483679e-002, 1.307325e-002, 1.045569e-002, -7.752373e-003, 4.982249e-002, 5.714868e-003, 2.134793e-002, 7.099625e-002, -


© ISO/IEC 2004 — All rights reserved

Copyright International Organization for Standardization
Provided by IHS under license with ISO
No reproduction or networking permitted without license from IHS
Not for Resale

2.697268e-002, -4.020140e-003, 7.407675e-002, -8.736302e-002, -5.126850e-002, 5.258284e-002, -4.764962e-003, -3.333826e-002, 3.997664e-002, 8.936711e-002, 3.938559e-002, 2.432650e-002, -4.008633e-002, -4.376932e-004, 3.020388e-002, -9.535104e-003, 2.068695e-002, -5.407404e-002, 7.269265e-002, -1.094631e-001, -1.593343e-002, 5.316237e-002, 1.079071e-001, 8.386292e-002, -3.859082e-002, 5.263779e-002, -1.375135e-002, -1.578501e-002, -2.235122e-002, -1.194078e-002, 1.675718e-002, 1.236641e-002, -3.444669e-002, -2.969577e-002, -3.507312e-002, -6.227681e-002, -5.849032e-002, 2.083327e-002, -1.999628e-002, 9.972714e-002, -2.518453e-002, -2.633585e-002, -6.524171e-002, 7.163572e-002, 4.747264e-003, 1.533623e-002, 5.776908e-002, -6.706816e-002, -3.394058e-002, -3.134916e-002, -2.840720e-002, -3.880587e-003, 4.339018e-002, 5.273774e-002, 1.626275e-002, 2.803267e-002, -3.973365e-002, 1.646094e-002, 9.805533e-002, 4.991808e-002, -5.396817e-003, 3.190548e-003, -4.054354e-002, -8.165946e-003, -1.249138e-002, 2.473680e-002, 6.566966e-002, -6.723008e-002, 4.777266e-002, -1.023273e-001, 7.545385e-002, 8.185081e-002, -4.281458e-003, 2.886563e-002, 5.076393e-003, 4.028920e-003, -1.817580e-002, 5.315769e-003, 4.529438e-003, -2.399731e-002, -4.032833e-002, -3.910820e-002, 6.233036e-003, 2.880300e-002, -1.124675e-003, 5.561137e-002, 2.352402e-002, 5.403824e-002, 1.459051e-002, -4.422378e-002, -9.910540e-002, -4.850560e-002, 7.226353e-002, -1.233866e-001, -1.808632e-002, -6.080818e-003, -2.386602e-003, 2.709136e-002, 3.221780e-002, 2.629521e-002, -9.630693e-003, -7.402515e-003, 6.589056e-003, -2.316547e-002, 1.815991e-002, 1.469405e-002, 3.092454e-003, -2.317638e-003, -2.833588e-002, 4.698326e-003, -6.999544e-002, 1.137577e-001, 9.523497e-002, -2.185571e-003, 3.861715e-002, -6.383069e-002, 1.680476e-002, -2.383614e-002, -6.779854e-003, -1.416882e-002, 3.170708e-002, 4.297045e-002, -1.914859e-002, -1.141203e-003, -1.696062e-002, -1.681380e-002, -2.149317e-002, -3.954048e-002, 1.032000e-002, 3.917518e-002, 3.738142e-002, -7.898554e-003, -1.799348e-002, 2.937548e-002, -4.819220e-002, 5.390818e-002, -7.755906e-003, -2.035912e-002, -3.431880e-002, 3.661527e-002, 1.734160e-002, -6.992617e-003, -3.196790e-002, -1.926881e-002, -4.128278e-003, 1.023847e-002, -2.277819e-002, -3.921494e-003, -5.873427e-003, -7.016989e-003, 2.487563e-002, -5.625605e-003, -8.214118e-003, -2.510259e-002, 3.855442e-002, -8.012036e-003, 5.362999e-003, 4.292363e-002, -3.260860e-002, 4.742980e-002, -6.034201e-002, 4.227985e-002, -7.540491e-002, 4.948077e-002, -3.970538e-002, 1.575582e-003, 1.964729e-002, 4.065467e-002, -7.631602e-003, -2.692252e-003, -1.381985e-002, -7.721826e-003, -1.349791e-002, -2.648265e-003, 3.457653e-002, 7.463624e-003, -1.048392e-002, -3.689050e-002, 5.672619e-002, -2.970381e-002, 2.656165e-002, -2.426511e-002, -1.049148e-001, 1.691071e-002, -2.847809e-002, 1.197328e-002, 5.637582e-003, 1.606239e-002, 3.202231e-002, 2.849290e-002, -2.343874e-002, -3.700317e-002, -2.172225e-002, 1.396989e-002, 2.030113e-002, 2.337367e-003, -8.206199e-003, -2.205403e-002, 1.915813e-002, 3.955014e-003, -3.811275e-002, 3.292395e-002, 1.585230e-002, 6.798523e-003, 1.260895e-002, 2.430596e-002, -5.487322e-002, -2.318637e-003, 1.579711e-002, -3.264976e-002, 4.809890e-002, 9.076528e-003, -3.791167e-004, 3.104904e-003, -1.737189e-002, 2.006616e-003, 1.188738e-002, -4.035874e-003, 1.537170e-002, -1.274624e-003, -1.052370e-003, -1.640734e-002, -5.424083e-003, 3.864868e-002, -5.422999e-002, 2.583580e-002, 1.864617e-003, -8.227309e-002, -1.249012e-002, -3.932154e-002, 3.038266e-002, -6.701051e-002, 2.804250e-002, -7.907766e-003, 1.230180e-002, 3.791223e-002, -3.389879e-004, -2.145192e-002, -1.186370e-002, 6.885815e-003, 1.091413e-002, -3.478787e-003, -1.770065e-002, 3.269623e-003, 1.835006e-002, -9.955826e-003, -3.179687e-002, 3.799723e-002, -1.127494e-002, -5.972611e-003, 2.022801e-002, -3.109531e-002, -2.193053e-002, 1.986249e-002, -4.884106e-002, 6.772077e-003, -9.310012e-003, 3.088504e-002, 2.267188e-002, -2.429217e-002, -1.430028e-002, 1.867656e-003, 1.209140e-002, 2.093947e-003, 7.094741e-003, 5.205818e-003, -2.356815e-002, 8.293864e-003, 1.918450e-002, -3.000738e-002, 2.072951e-002, -3.228946e-002, 3.054102e-002, -8.249410e-003, 2.908336e-017, 2.418886e-004, 2.420027e-003, 5.359601e-003, 6.571160e-003, -3.890899e-003, -1.867141e-002, 3.070759e-002, -5.177882e-002, 3.481823e-002, -6.744459e-003, -3.759955e-002, 3.759955e-002, 6.744459e-003, -3.481823e-002, 5.177882e-002, -3.070759e-002, 1.867141e-002, 3.890899e-003, -6.571160e-003, -5.359601e-003, -2.420027e-003, -2.418886e-004, 5.549921e-003, -4.491246e-003, 2.328921e-002, 3.872799e-002, -3.454837e-002, -9.112929e-003, 4.885247e-002, -3.053717e-002, 2.616291e-003, 3.862424e-002, 2.876496e-002, 1.006252e-003, -1.032474e-002, -8.318079e-003, 6.478702e-002, -8.863450e-002, -7.234030e-002, 6.799954e-002, 5.541219e-003, -7.822254e-002, 2.828746e-002, -1.003596e-002, 9.463494e-003, 3.488440e-002, 6.827511e-002, 2.669990e-002, 7.481179e-003, 9.158925e-002, -5.558241e-002, 6.101792e-002, 1.092723e-002, -2.395603e-002, -4.846988e-002, -8.376714e-003, 1.465869e-002, 7.181720e-003, 1.020363e-002, -3.625425e-002, -4.140206e-003, 6.070935e-003, -3.634890e-002, -6.726047e-002, -6.913500e-002, 4.275727e-002, -2.514130e-003, 6.761147e-003, 8.989890e-003, -6.357924e-002, 3.799430e-002, 4.960930e-002, -7.120084e-002, 1.078636e-001, -3.662589e-002, 6.215615e-002, 2.454248e-002, 7.648160e-002, 3.440856e-002, 2.658951e-002, 2.379796e-002, 1.763696e-002, 2.983918e-002, 1.374967e-002, -2.362656e-003, -8.303507e-002, 6.559770e-003, -5.745785e-002, 6.634165e-003, -7.110559e-002, 3.103911e-002, -4.911424e-002, 1.086267e-001, -1.463683e-002, -5.971692e-002, 1.381302e-002, -4.578108e-002, -2.248287e-003, 9.463887e-003, 7.360879e-002, -7.788428e-003, -3.336327e-002, -5.408199e-002, 3.930312e-002, 2.324825e-002, -4.799275e-002, -1.885011e-002, 1.793899e-002, 5.875106e-002,

© ISO/IEC 2004 — All rights reserved


Copyright International Organization for Standardization
Provided by IHS under license with ISO
No reproduction or networking permitted without license from IHS
Not for Resale

3.337560e-002, 2.727746e-002, -4.775383e-003, 9.138858e-002, -9.043832e-003, -1.940743e-001, -2.148948e-001, 8.786967e-002, 9.339236e-002, 4.260074e-002, -3.719791e-002, -5.907945e-002, -3.031940e-003, -5.290911e-002, -1.143980e-002, -3.316107e-002, 6.741595e-003, -7.542293e-003, 2.013892e-002, 2.588128e-002, -2.296999e-002, -5.471613e-003, -4.591313e-002, -3.089023e-002, 7.238901e-002, 2.602482e-002, 7.739999e-002, -9.333501e-002, -8.152252e-002, -1.447529e-002, 8.942228e-002, -5.668207e-003, -6.431339e-002, 4.033508e-002, 5.450592e-002, 1.941483e-003, -1.177973e-002, -4.637845e-002, 1.277627e-002, 2.576435e-002, 1.757234e-003, 6.891112e-003, -1.652637e-002, 2.572176e-004, 9.148775e-003, 6.933011e-002, -4.396129e-003, -1.145982e-002, 7.160258e-003, -2.239683e-002, 4.005826e-002, 1.188129e-001, 9.234175e-002, -1.043965e-001, -5.176335e-002, 1.047997e-002, -4.060200e-002, 7.854929e-002, 1.156089e-002, -1.149040e-002, 1.279315e-002, 1.096063e-002, -1.192756e-003, -4.963500e-004, -6.161905e-003, -9.963136e-003, -3.964476e-002, -1.355445e-002, 4.984453e-003, 5.705153e-002, 9.015809e-004, 4.174408e-003, -3.973422e-003, 6.566235e-002, 9.724316e-002, -1.027818e-001, -1.065033e-003, 3.999902e-002, 1.772116e-002, 4.369647e-002, -5.667710e-002, 6.506322e-003, 1.579321e-003, -9.334049e-003, -2.081890e-002, 1.242992e-003, -3.938285e-003, -1.231823e-002, 2.701860e-002, 2.317589e-002, -2.849093e-002, -1.187418e-002, 1.730707e-002, 1.813901e-002, 6.909995e-002, -5.363022e-002, -1.223217e-002, 7.711332e-002, -5.353695e-002, 3.490006e-003, 2.901255e-002, -2.162399e-002, -3.682113e-002, -1.918217e-002, 5.699001e-003, 1.320299e-002, -2.149682e-002, 1.430847e-003, 1.985667e-002, 8.321264e-003, -6.659755e-003, -2.802739e-002, 1.683066e-002, 5.327357e-002, -1.256966e-002, -7.427107e-003, -3.064173e-002, 6.293640e-002, 4.254116e-002, -4.228743e-003, 2.290600e-002, 3.125819e-002, -4.149755e-002, 1.245491e-002, 5.938702e-002, -6.174400e-002, 4.680514e-002, -1.061920e-002, -3.619591e-002, -2.569418e-003, 1.369810e-002, 8.195555e-003, -2.448483e-003, 7.883301e-003, 1.376513e-002, -1.380541e-002, -1.006595e-002, 3.553650e-002, -3.526360e-002, -1.457893e-002, 1.422508e-002, 2.997338e-002, 9.984932e-003, -7.183819e-002, 3.780635e-002, -2.470712e-002, 2.783514e-002, 8.522098e-003, 3.059942e-002, -2.715237e-002, -7.314976e-003, -2.900877e-002, -1.313357e-002, 1.727591e-002, 1.325906e-002, 2.360338e-003, 5.372067e-003, 3.792014e-003, -3.257934e-003, 5.465447e-003, -5.900605e-003, -7.087695e-003, 1.924440e-002, 3.594991e-002, -4.641280e-002, 8.809693e-002, -4.710148e-002, 8.376019e-003, -3.417333e-002, 6.751466e-002, -2.845004e-002, 1.792515e-002, 2.795161e-002, -3.565943e-002, -2.496340e-002, -4.868416e-003, 1.624965e-002, 2.236366e-002, -2.008601e-003, 1.505244e-002, -1.580411e-003, -1.040601e-002, 1.231616e-002, 3.482810e-003, 2.004018e-002, -4.026591e-002, 5.955769e-002, -2.645650e-002, 4.941478e-002, -1.224747e-002, 3.405465e-002, -3.434192e-002, 1.746846e-002, 1.576899e-002, 1.363105e-002, 1.779189e-002, -1.218021e-002, -1.420606e-002, 1.201196e-002, 1.402693e-002, -5.001778e-003, -6.639067e-003, 5.587626e-003, 1.875911e-002, 7.025831e-003, -3.140940e-002, 1.302647e-002, 6.433304e-003, -3.225189e-002, 2.531706e-002, 6.510446e-004, 8.527222e-003},

{-3.070217e-003, 3.184926e-003, -1.645486e-002, 3.732804e-002, -1.993234e-002, -3.641017e-002, 5.583074e-002, 4.352514e-002, -7.619719e-002, 2.194449e-002, 1.645754e-002, -6.006929e-002, -6.006929e-002, 1.645754e-002, 2.194449e-002, -7.619719e-002, 4.352514e-002, 5.583074e-002, -3.641017e-002, -1.993234e-002, 3.732804e-002, -1.645486e-002, 3.184926e-003, -5.175505e-003, -2.160187e-002, -1.610932e-002, 5.351635e-002, -4.992929e-002, 1.741036e-002, 8.145745e-003, -2.613252e-002, 1.521767e-002, -4.661298e-002, -7.270331e-002, 4.185399e-003, -4.525300e-002, -2.248484e-002, 3.621751e-002, 4.700297e-002, -4.852191e-002, 3.749999e-002, -3.973663e-002, -6.083048e-002, -2.593236e-002, 2.021959e-002, -6.731208e-004, 4.318045e-003, 6.522986e-002, -2.234057e-002, -3.170495e-002, 4.300845e-002, 4.827839e-002, -3.592080e-002, 4.486797e-002, 3.388395e-002, -4.366095e-002, 6.501304e-003, 4.833242e-002, 2.426813e-002, 4.426517e-002, -1.718554e-002, -4.895127e-002, -1.748692e-002, -7.292304e-002, 3.268061e-002, -6.868192e-002, 2.812014e-002, 6.151049e-003, -6.808165e-002, 4.099501e-002, -2.612437e-002, -1.235938e-002, 9.573050e-002, 5.641425e-002, -1.560623e-002, -6.093632e-003, 7.461289e-003, 1.987977e-002, 6.155626e-002, 2.599740e-002, 3.410214e-002, -3.189311e-002, 1.227584e-002, -1.641539e-002, -8.762871e-003, 5.811221e-003, 4.168283e-002, 7.440276e-002, -8.718245e-002, 1.184389e-001, 3.664157e-002, 9.061260e-002, -8.115537e-002, -1.357404e-002, -7.329361e-002, 7.519185e-002, -2.384098e-004, 1.373446e-002, -4.760138e-002, -7.597351e-003, 4.466752e-002, 2.256375e-002, 3.436003e-002, -2.929165e-002, -1.020066e-002, -2.233227e-002, -3.287712e-003, -2.173833e-002, 1.087412e-002, 1.067149e-003, 9.843205e-003, 8.261898e-002, -1.594766e-004, 8.604403e-002, -1.209199e-002, 3.595268e-002, 4.539230e-002, -3.278682e-003, -8.646430e-002, 1.156895e-001, 1.082653e-002, -2.658209e-002, 6.669849e-003, 2.277440e-002, 2.810049e-002, -4.278631e-002, -2.810467e-002, 1.393669e-002, 2.053392e-002, 4.188391e-003, 3.247601e-003, 7.230775e-002, 3.291797e-002, 5.706865e-002, 1.503004e-001, -5.253635e-002, -2.482804e-002, -3.836028e-002, -3.910284e-003, 1.318435e-001, 4.688940e-002, 5.289248e-003, 5.808069e-002, -1.835061e-002, -4.518131e-002, 1.375898e-002, 4.388644e-002, -1.426242e-002, -1.585641e-002, -5.216660e-003, 4.083328e-003, -1.522255e-002, 2.075695e-002, 5.826200e-004, -8.274539e-002, -4.427673e-004, -7.643925e-002, 1.937663e-002, 5.563009e-002, 9.195077e-002, -4.448219e-002, -3.122793e-002, -1.085237e-001, 1.141517e-003, 1.100752e-001, -2.619704e-002, -6.655122e-003, 2.129158e-002,


© ISO/IEC 2004 — All rights reserved
--`,,```,,,,````-`-`,,`,,`,`,,`---

Copyright International Organization for Standardization
Provided by IHS under license with ISO
No reproduction or networking permitted without license from IHS
Not for Resale

2.992372e-002, -3.436939e-002, -4.160687e-002, -2.318832e-003, 3.974003e-002, -2.396921e-002, 9.033945e-003, 1.825270e-002, -2.482654e-003, -2.786390e-002, -6.326600e-002, 7.338450e-003, 7.868063e-002, 1.148597e-002, 9.014614e-002, -4.418089e-003, 1.361998e-001, -8.000191e-002, 7.415462e-002, -6.616935e-002, 8.275484e-003, -7.499286e-003, 9.105382e-003, -2.237228e-002, -4.938946e-002, 1.866756e-002, 5.471962e-002, 1.586369e-002, 9.137866e-003, -1.781012e-002, 1.104686e-002, 4.180785e-002, -5.052717e-003, 1.113020e-002, -2.150757e-002, -4.437134e-002, 2.460844e-002, -5.145300e-002, 4.628980e-003, -1.718742e-002, -5.060689e-002, 2.933313e-002, 2.717641e-002, 1.728603e-002, -8.968816e-004, -4.735912e-002, -1.527726e-002, 3.267901e-003, 2.761169e-002, 3.510971e-002, -6.037773e-003, 1.347912e-002, -3.368650e-003, -1.479141e-002, -1.917031e-002, 1.890175e-002, 1.523327e-002, -4.007859e-002, 4.283333e-003, 4.982372e-002, 3.872613e-002, -5.998225e-002, 1.651121e-002, -2.056632e-002, 1.493179e-002, 1.494641e-002, 1.838831e-002, -2.020227e-002, 8.931610e-003, -2.736693e-002, 7.283200e-003, 4.431683e-002, -2.274425e-003, -1.683486e-002, 2.050588e-002, 1.142196e-002, -2.895139e-002, -3.237573e-002, -3.505375e-002, 3.548559e-002, 1.162402e-002, 2.447078e-003, -1.340340e-002, 3.664763e-002, -4.321534e-002, 3.906367e-002, -1.191117e-002, 3.655884e-002, -1.954221e-002, 2.598360e-002, -1.091778e-002, -6.145294e-002, 1.656635e-002, 4.096607e-002, 1.677065e-002, -2.296728e-002, -2.453748e-002, 2.166451e-002, 3.672151e-003, -4.407525e-004, -1.102917e-002, -1.036429e-002, 8.389274e-003, 7.189758e-003, -3.137874e-002, 2.252190e-002, -3.585742e-002, -1.918142e-004, 3.535356e-002, -3.123013e-002, 1.281965e-003, 4.165765e-002, -4.411341e-003, -2.804815e-002, 9.835917e-003, 2.651734e-002, -1.285360e-003, -1.322432e-002, -1.303446e-002, 1.973872e-003, -2.936816e-003, 1.280212e-003, -6.956762e-003, -2.219002e-002, -1.115211e-002, 2.756667e-002, 7.563667e-003, -2.728495e-002, 1.124211e-002, 1.956814e-002, -7.480417e-002, -4.182113e-002, 4.011206e-002, -1.660558e-002, -1.084869e-002, 9.961640e-003, -2.644818e-002, 1.242658e-002, -1.184001e-002, -5.133902e-004, 4.780853e-003, -1.655207e-002, -1.277164e-002, 8.004853e-003, 2.851958e-003, 5.333356e-003, 1.424792e-004, -3.378922e-002, 6.218668e-003, 7.165314e-003, -1.315198e-002, -1.885473e-002, -6.030216e-003, 2.368042e-002, -4.753928e-018, 6.880851e-003, -1.214382e-002, 1.395160e-002, -4.700979e-003, -3.842292e-002, 3.713809e-003, 6.745291e-002, -4.686215e-002, 1.862703e-002, -2.542594e-003, -1.292055e-002, 1.292055e-002, 2.542594e-003, -1.862703e-002, 4.686215e-002, -6.745291e-002, -3.713809e-003, 3.842292e-002, 4.700979e-003, -1.395160e-002, 1.214382e-002, -6.880851e-003, 1.574904e-002, 4.112585e-002, -1.678518e-002, -6.980654e-002, 1.293204e-001, -8.382672e-002, 1.156515e-002, -1.963194e-002, 1.306963e-002, 5.769921e-002, 3.144242e-002, -2.673193e-002, -1.669928e-002, -1.883745e-002, 1.079163e-002, -4.843761e-002, -3.834201e-002, -5.103939e-003, 4.217186e-002, 1.339694e-003, -5.112844e-002, 1.314328e-002, -3.638062e-002, -3.737390e-002, -9.376053e-003, 6.960292e-002, -6.746243e-002, -2.719540e-002, -3.166250e-002, 3.726089e-002, -1.669996e-002, -5.792531e-002, -3.311030e-002, -2.456120e-002, -1.044895e-002, 2.082729e-002, -1.295085e-002, -3.348735e-002, -3.097931e-002, -4.070605e-002, -2.681328e-002, 2.703286e-002, -5.864315e-002, 8.557570e-002, -4.491641e-002, 2.279811e-002, 4.893987e-003, -1.681810e-002, -9.307757e-002, 1.244700e-001, -9.140611e-002, 8.001976e-002, 1.370865e-002, -1.100027e-002, 6.200371e-002, 1.697818e-002, -1.373877e-002, 1.679668e-003, -1.869728e-002, -3.245135e-002, -5.169665e-002, -2.648639e-002, -3.067986e-002, -2.980329e-002, 2.781012e-002, -7.464751e-003, 2.890057e-002, -2.368231e-002, -1.140996e-001, -6.250087e-002, -2.772517e-002, -5.316373e-002, -4.137699e-002, -4.126390e-002, -6.440232e-002, -3.804665e-002, 1.333725e-002, 8.002758e-004, -4.563243e-002, -2.072621e-002, 1.729184e-002, 3.021848e-002, 6.348011e-002, 2.089344e-002, -6.094985e-003, 6.561750e-002, -2.432641e-002, -1.195079e-002, 5.921517e-002, -5.494362e-002, -7.060753e-002, -1.439097e-002, -2.212507e-002, 3.948288e-002, -2.008378e-002, -9.074860e-002, 1.164282e-001, 7.750354e-002, -3.601401e-002, 2.170618e-002, 2.366134e-002, 1.514228e-004, 9.312878e-003, 1.087631e-002, 1.153207e-002, 1.652727e-002, -5.402058e-003, -4.149596e-002, 1.101568e-002, 7.626525e-002, -5.212233e-003, 3.620307e-002, -7.964350e-002, 2.947800e-002, 6.364459e-002, 1.280175e-001, -7.687527e-002, 1.006182e-001, 4.020046e-002, -2.657700e-002, -1.053348e-001, -2.238048e-002, 5.884286e-002, 1.246064e-002, -3.478489e-003, 6.582882e-003, -4.105146e-003, -2.669223e-002, 1.621133e-002, 3.591174e-003, 1.680431e-002, 1.228120e-002, -6.270798e-003, 2.037499e-002, -6.451781e-002, -5.476393e-004, -2.287124e-002, 7.612360e-002, 4.995537e-002, -7.681149e-002, 2.619148e-002, 4.122109e-002, 6.507126e-002, 3.129632e-003, 6.462208e-002, -8.913321e-003, 7.209511e-003, 2.393566e-002, 2.080382e-002, -2.063964e-002, -1.423367e-002, -3.356349e-002, 2.402314e-002, -1.522921e-003, -1.646748e-002, 1.636027e-002, 2.824317e-002, 5.534874e-002, 3.226187e-002, -1.286442e-001, 3.177620e-002, 8.027777e-002, 1.823380e-002, 2.819220e-002, 2.221855e-002, -2.569588e-002, 1.358321e-002, -5.625237e-002, 1.017507e-002, 3.760030e-002, 2.779987e-002, -1.663873e-002, -1.552265e-002, -4.781808e-003, 4.098938e-003, 3.399970e-004, 3.060628e-002, -2.101581e-002, -4.016009e-002, 9.291335e-003, -5.600333e-002, 7.715859e-002, 1.612860e-002, -4.660026e-002, -9.318287e-002, 1.277146e-001, -6.779117e-002, 2.485871e-002, -2.304760e-002, -3.597878e-002, 2.796929e-002, 3.921244e-002, 3.759353e-002, 9.251052e-003, -1.364875e-002, -3.121494e-002, 6.625858e-003, -1.151999e-002, 2.071671e-002, -9.313290e-004, 1.318140e-002, 2.451342e-002, 5.691623e-002, -3.701693e-002, -1.640744e-002, -4.074401e-002, 8.098006e-002, -

© ISO/IEC 2004 — All rights reserved


Copyright International Organization for Standardization
Provided by IHS under license with ISO
No reproduction or networking permitted without license from IHS
Not for Resale

4.850617e-003, -1.804133e-003, 1.988960e-002, -1.966758e-002, 4.826788e-002, -5.543982e-003, -1.255763e-002, 1.313315e-002, 1.615883e-002, -1.060784e-002, -3.314851e-002, -1.113965e-002, 1.376334e-002, 2.604651e-002, 1.109713e-002, 1.135864e-002, -3.863951e-002, -2.396711e-003, 1.374365e-002, 5.326830e-002, -3.232340e-002, -7.963800e-003, 1.956596e-002, 2.952720e-002, -2.276091e-002, 1.047940e-002, 3.516257e-002, -3.438413e-002, -1.026504e-002, -1.898183e-002, 3.322336e-002, 6.460429e-003, -3.186811e-002, -2.815469e-002, 6.989974e-003, -2.551875e-003, 1.858729e-002, 3.096059e-003, -3.604448e-003, -1.571853e-002, -2.961179e-002, 3.052498e-002, -5.764901e-003, 2.544129e-002, 1.708872e-002, -1.919673e-002, -8.916339e-003, 5.064522e-002, -1.967930e-002, 1.503303e-003, -8.681999e-003, -1.299980e-002, 3.942576e-002, 8.970050e-004, -1.003748e-002, -7.234940e-003, 4.185733e-003, 4.133401e-003, 6.350939e-003, 4.512067e-003, 1.204913e-002, 4.558325e-003, -6.933197e-003, -9.277005e-003, 3.836192e-002, 1.768554e-002, -4.044629e-002, 6.208736e-003, 4.929591e-003, -5.798171e-004, -7.350936e-003, 3.010215e-002, -3.189430e-002, 3.467342e-002, 5.339579e-003, -6.341290e-003, 2.334290e-002, -3.885256e-003, -3.712758e-003, -2.685702e-003, 1.039587e-002, -4.925993e-003, 7.988597e-004, 4.379442e-003, 6.016091e-003, -5.007681e-003, -2.806043e-002, 6.253825e-003, 5.981479e-002, -2.108011e-002, -2.312450e-002, 5.466862e-003},

{1.744822e-003, -1.653493e-003, 1.232837e-002, 2.247613e-002, -5.650227e-002, -1.893733e-002, -1.790157e-004, -5.355286e-002, -7.346006e-005, 6.363923e-002, -5.318603e-002, -1.472803e-002, -1.472803e-002, -5.318603e-002, 6.363923e-002, -7.346006e-005, -5.355286e-002, -1.790157e-004, -1.893733e-002, -5.650227e-002, 2.247613e-002, 1.232837e-002, -1.653493e-003, -4.499626e-003, 1.650217e-002, -1.215823e-002, 6.419004e-002, -4.150777e-002, -5.020065e-002, -3.840615e-002, 1.263901e-003, 1.320083e-002, -1.191147e-002, 3.364560e-002, 8.635522e-003, 6.478929e-005, 1.637814e-002, 7.845143e-003, 7.916257e-002, 3.295664e-002, -2.218203e-002, -9.057287e-002, 1.221720e-001, 1.829936e-002, 1.728750e-002, 8.798261e-003, 1.997397e-002, 1.856953e-002, 5.559386e-002, 3.981864e-002, 2.485535e-002, -3.737046e-002, 2.525842e-002, -2.994562e-002, -3.667963e-002, 1.765597e-002, -1.124651e-002, -2.981161e-002, -3.584988e-003, 2.014526e-002, 2.281243e-002, -4.335429e-002, 5.977833e-002, 1.915471e-002, -1.137079e-003, 9.750360e-002, -1.769934e-002, 3.541640e-002, 3.252933e-003, 1.985394e-002, 1.750138e-002, -7.663894e-003, 5.250714e-002, -4.403413e-002, 9.574302e-002, -2.391151e-002, -3.126412e-002, -2.463776e-003, -1.117905e-002, -4.566916e-002, -2.915203e-002, 2.956449e-002, 6.505448e-003, -5.091678e-002, 1.699191e-002, 1.702391e-002, 5.777766e-002, 9.621550e-003, 2.264835e-002, -4.484776e-002, -5.541950e-002, -5.784266e-002, 4.817591e-003, -2.013986e-002, 6.027148e-002, 5.743934e-002, 9.787563e-004, 1.688960e-004, 1.365460e-002, -2.246959e-002, 6.163631e-002, 1.320622e-002, -4.003260e-003, -1.405711e-002, -4.629639e-002, -5.115727e-002, 9.987277e-003, 8.814713e-002, 8.632266e-002, 8.314903e-003, -5.088667e-002, -8.633486e-002, -2.743667e-002, -2.845112e-002, 1.181952e-001, -2.593579e-002, 1.322328e-002, 8.642912e-002, -4.066175e-002, 4.364305e-002, -2.477950e-002, -1.008931e-002, 5.277771e-002, -7.384618e-003, 3.630736e-002, 3.691471e-002, 5.739102e-002, 1.108586e-002, -7.262558e-002, -9.448653e-002, -4.797058e-002, 5.820192e-003, -1.507683e-002, -4.966761e-003, 6.627302e-002, -1.082545e-001, 3.169919e-002, -1.158145e-001, 2.690025e-003, 1.136488e-001, -1.200735e-002, 6.074180e-002, -3.640448e-002, 2.133427e-002, -2.603698e-002, 3.089513e-002, 6.936600e-004, -6.918862e-002, -1.187287e-002, -1.765935e-002, 3.524809e-002, 5.327405e-002, -7.904333e-003, 1.500420e-002, 3.114348e-002, 1.463310e-002, 9.498123e-003, 1.670046e-003, -8.676452e-002, 1.143663e-001, -4.882870e-002, 1.853222e-002, -8.554352e-002, 4.543353e-002, -6.286057e-002, 8.262160e-002, -1.026046e-001, 2.084904e-002, 4.288272e-002, -2.143723e-002, -8.241971e-003, -4.275026e-003, 1.924274e-002, 2.063749e-002, 1.718054e-002, 4.866985e-003, -3.117703e-002, 7.889929e-003, 1.384382e-002, -7.250914e-002, 6.866233e-002, -7.591519e-002, 3.861361e-002, 8.667359e-002, 4.681612e-002, -7.223735e-002, 2.346263e-002, 4.806414e-002, -2.260560e-002, -3.253578e-002, 9.259789e-003, 1.812094e-002, -1.900852e-002, -4.224882e-002, 8.820800e-003, -3.140661e-003, 9.126210e-003, 4.613903e-002, -7.973530e-003, -2.806160e-002, 1.725593e-002, 5.059766e-002, -5.132663e-002, -4.434299e-002, 7.228488e-002, -2.776844e-002, -1.267850e-002, -1.571131e-002, 2.560910e-003, -6.591213e-003, 1.059012e-002, -1.953186e-002, -2.132148e-002, 3.804560e-002, -4.100653e-003, -6.631219e-003, 4.642742e-002, 6.852628e-003, -1.098135e-002, -1.032806e-003, 3.528422e-002, 4.048183e-002, -3.146254e-002, -2.170441e-002, 4.466858e-002, 1.587128e-003, -5.858443e-002, 2.932437e-002, -9.259689e-003, 2.892621e-002, 6.164219e-002, -4.077114e-002, -5.061635e-003, -1.097548e-002, -3.403802e-004, -1.385144e-003, -1.648578e-002, 6.822849e-003, 1.694097e-002, -2.919580e-003, -6.407574e-003, -1.011306e-002, -1.712187e-002, -8.328657e-003, 1.398058e-002, -6.999487e-003, 2.212355e-003, 9.598484e-003, 2.414929e-002, 8.220240e-003, 1.779266e-002, -4.145336e-003, -3.212790e-002, 2.282274e-002, -2.679818e-002, -6.379491e-004, 3.737997e-002, -3.206449e-002, 1.067901e-002, 5.583659e-003, 1.202020e-003, -1.185193e-002, 1.576649e-003, -2.945060e-003, 9.403700e-003, -6.365109e-003, -3.316908e-003, 1.403402e-002, -4.689470e-003, -1.223531e-002, 1.888509e-002, 8.279145e-004, -3.018156e-002, 2.263231e-002, 2.479442e-002, -7.180551e-002, -3.263429e-002, 2.299691e-002, -1.549323e-002, 1.324530e-002, 4.885088e-005, -1.831319e-002, 1.007813e-002, -1.572155e-002, 2.165168e-003, 9.351123e-003, 3.292828e-003, -1.411173e-003, -


© ISO/IEC 2004 — All rights reserved

Copyright International Organization for Standardization
Provided by IHS under license with ISO
No reproduction or networking permitted without license from IHS
Not for Resale

1.042855e-002, -1.145185e-002, 1.282837e-003, 1.752162e-002, 3.096578e-003, 2.085948e-002, 1.451922e-002, -2.182553e-003, 2.212903e-004, -2.901758e-002, 7.937813e-003, -4.868036e-002, -1.651802e-002, 3.443104e-002, -3.382708e-002, 3.723418e-002, -1.922361e-003, -1.803989e-002, 1.710680e-002, -1.902575e-003, -1.425984e-002, -3.084546e-003, 2.521288e-003, 6.052607e-003, -6.873592e-004, 6.791449e-003, -9.082158e-003, 4.615645e-003, -1.728448e-003, 2.115555e-002, 1.749320e-002, -1.340156e-002, 1.413804e-002, -1.586653e-002, -3.348783e-017, 4.613730e-003, -1.050074e-002, 1.429616e-002, -2.057855e-002, 1.280295e-002, -3.262870e-002, -2.025742e-002, -1.054452e-002, 5.460661e-002, 2.064253e-002, -4.486435e-002, 4.486435e-002, -2.064253e-002, -5.460661e-002, 1.054452e-002, 2.025742e-002, 3.262870e-002, -1.280295e-002, 2.057855e-002, -1.429616e-002, 1.050074e-002, -4.613730e-003, 1.161142e-002, -2.373861e-002, 6.955971e-003, 1.144732e-001, -2.092086e-002, 6.826994e-002, 2.058009e-002, -7.417573e-002, 5.673083e-002, -1.591455e-002, -3.316210e-004, 2.605270e-002, -5.872006e-002, -1.882854e-002, 6.478855e-002, 9.741869e-002, 5.832554e-002, 1.006055e-001, -4.118476e-002, 1.136707e-001, -3.556784e-002, 2.116761e-002, -8.520686e-004, 2.262471e-003, 5.205536e-002, -3.721555e-002, -2.286642e-002, 2.141049e-002, 6.943473e-002, 1.252239e-002, 3.385533e-002, -6.793932e-002, 2.645369e-002, -1.306963e-002, -1.067858e-002, -3.241296e-002, 7.809581e-003, 4.778541e-002, -4.345112e-002, 3.780756e-002, 5.807839e-002, 3.367065e-002, 4.185309e-004, -1.291713e-001, -8.500322e-002, -1.661537e-002, 7.100576e-002, -5.656316e-002, -1.133374e-001, -2.755544e-002, 1.259024e-001, 1.420299e-002, -9.641725e-003, -2.506208e-005, 4.377802e-002, -3.939398e-002, -3.445565e-002, -6.011589e-002, -2.159370e-002, -1.049730e-003, -5.163821e-002, -3.530610e-002, -8.482835e-002, -3.542367e-002, -9.121893e-002, -4.474833e-002, -6.549123e-002, 7.963204e-002, 5.382482e-002, -9.738472e-002, 1.099563e-003, 9.161438e-002, -2.231723e-003, -2.205445e-002, 1.509509e-002, 7.299629e-002, 3.808845e-003, 2.827449e-002, 4.976179e-002, -3.004091e-003, 4.391290e-003, 1.745840e-002, -6.702672e-002, -3.650500e-002, -6.741391e-002, -2.073305e-002, 5.708179e-002, 5.014512e-002, -3.233518e-002, -2.549160e-002, 8.077255e-003, -6.224178e-002, -7.951078e-002, -2.678824e-002, -1.358179e-002, -4.517674e-002, 7.701484e-002, 5.365822e-003, -3.838058e-002, -8.368470e-002, -8.191907e-002, -4.579029e-002, -1.747251e-002, -5.668512e-003, 4.411737e-002, 3.500352e-002, -2.303802e-002, 4.397434e-002, 3.457519e-002, 3.776969e-003, -1.374536e-002, -3.080145e-002, 8.507417e-002, 1.332045e-001, -1.227342e-001, -3.715091e-003, -7.079166e-002, -2.064692e-002, 4.478103e-002, -8.606206e-003, 2.959916e-002, -1.712667e-002, -4.948042e-002, 4.497631e-002, 2.307260e-002, 3.381710e-003, -2.578724e-002, 1.886416e-002, 2.764850e-002, 4.049568e-002, 5.874118e-003, 1.119979e-002, -1.578005e-002, -4.348668e-003, -1.792515e-002, -7.689130e-003, 5.511250e-003, 4.583968e-002, 3.065880e-002, -4.969915e-005, -1.554522e-003, 4.575230e-002, -2.484052e-002, -7.244111e-002, -2.743703e-002, 2.900782e-002, -4.276943e-002, -3.407415e-002, -2.421780e-002, 1.683451e-002, -1.138044e-002, -8.994067e-003, -2.280375e-002, 5.454124e-003, 6.714711e-002, 6.863905e-002, 1.426240e-002, -3.329556e-002, 1.259411e-002, -8.757482e-002, 8.571522e-002, -4.663890e-002, 2.299689e-002, 5.328795e-002, -1.320688e-002, -3.071213e-002, 2.399511e-002, 5.606244e-003, -7.153336e-004, -2.118423e-002, -1.756972e-002, 2.297850e-002, 6.291859e-003, -1.135289e-002, 1.904110e-002, 2.116934e-002, -1.183336e-002, -3.990720e-002, 5.765429e-002, 6.491098e-002, -7.315464e-002, -5.999899e-003, 7.675941e-002, 7.777921e-002, -5.207625e-003, 1.597817e-002, -2.408095e-002, 1.629261e-002, 3.338693e-002, -5.944978e-002, 1.872231e-002, -2.895339e-002, 3.030907e-003, 1.210862e-002, -1.143467e-002, 6.765135e-004, -1.834362e-002, -2.012795e-002, 3.272476e-002, -6.499896e-003, -2.890629e-002, 6.210193e-003, 1.133913e-002, 2.844256e-002, -5.739175e-002, 4.983090e-002, 4.674465e-002, -2.537152e-003, 6.246143e-003, 3.070998e-002, -2.764191e-002, -2.017605e-002, 1.200785e-002, -2.619812e-002, 3.100364e-002, 2.423689e-003, -5.949481e-003, -1.329076e-003, -1.648605e-002, -8.134188e-003, 4.000882e-004, -1.272093e-002, 3.606336e-003, -1.126419e-002, -1.616601e-002, 4.593447e-002, -4.480677e-002, -4.713535e-003, 4.743237e-002, 4.706303e-002, 3.114414e-002, 2.530521e-002, -5.508560e-002, 4.668831e-002, -3.707039e-002, -1.812490e-003, 4.093775e-002, -2.256757e-002, 9.711145e-003, 2.823460e-004, -2.660031e-003, 3.848351e-003, 6.909804e-003, -1.980771e-002, -1.365741e-003, -1.026856e-002, -2.946236e-002, 2.778656e-002, 1.077666e-002, -1.887110e-002, 2.624580e-002, 2.931840e-003, 3.997707e-002, -6.355589e-002, 5.847336e-002, 1.046549e-002, -3.894676e-002, 2.645452e-002, -3.353163e-003, -2.623677e-002, 1.083715e-002, -2.860380e-003, 1.203956e-004, -2.531074e-003, -4.554008e-003, 7.918444e-004, -3.736478e-003, -6.948014e-003, -1.833879e-002, 6.569587e-003, -1.180462e-002, 1.043680e-002, 6.131023e-002, -7.593585e-002, 4.348021e-002, 6.028953e-002, 2.588839e-002, 9.985288e-003, -2.593639e-002, 4.415274e-002, -1.839877e-002, -2.042525e-002, 1.449127e-003, 8.361486e-003, -5.353500e-003, -3.858237e-003, -1.321090e-004, 2.052059e-003, 6.850831e-004, 1.474646e-003, -1.025230e-002, 7.777777e-003, -1.566494e-002, -3.216208e-003, 2.189270e-002, -3.400429e-002, 4.719550e-002, -4.755675e-003, 2.007738e-002},

{-7.295591e-004, 2.174206e-004, -5.092213e-004, -4.612474e-004, -3.291407e-002, 3.877040e-002, -3.807586e-002, 1.212157e-002, 2.263662e-002, -3.327476e-002, -1.041847e-002, -2.726447e-003, -2.726447e-003, -1.041847e-002, -3.327476e-002, 2.263662e-002, 1.212157e-002, -3.807586e-002, 3.877040e-002, -3.291407e-002, -4.612474e-004, -5.092213e-004, 2.174206e-004, -9.625322e-003,

© ISO/IEC 2004 — All rights reserved


Copyright International Organization for Standardization
Provided by IHS under license with ISO
No reproduction or networking permitted without license from IHS
Not for Resale

2.985727e-003, -5.270343e-003, 4.986273e-002, -2.017754e-002, 2.281899e-002, 2.264427e-002, 4.021687e-002, -3.717990e-003, 5.132301e-002, -2.726062e-002, -5.528789e-002, -4.593457e-002, -4.043273e-002, 4.290348e-003, 1.561592e-002, -1.269785e-002, -5.857837e-002, -6.586194e-003, -4.870995e-002, 7.298385e-003, 3.551242e-002, -1.504774e-002, 2.582287e-002, -2.303572e-002, 1.362060e-003, 1.982242e-002, 4.864639e-003, 4.929464e-002, 1.646437e-002, 1.048383e-001, 8.204806e-002, 1.296647e-002, 2.921866e-002, 5.649176e-002, -7.753169e-003, 2.878867e-002, 6.213848e-002, 4.042199e-002, -8.556547e-003, 9.042122e-002, -3.355078e-002, -8.033751e-002, 7.095493e-002, -7.206585e-002, 2.088380e-002, -6.746907e-003, 2.223724e-003, -7.583530e-002, 9.188883e-002, 7.702480e-002, -6.063767e-002, 7.301058e-003, -1.682173e-002, -7.063160e-002, 2.745971e-003, 5.985448e-002, 4.707609e-002, -6.264431e-002, -5.561259e-002, -3.552776e-003, -1.311724e-002, -3.885355e-002, -4.390064e-002, -1.331870e-002, 1.656203e-002, 1.139704e-001, 6.002691e-002, 1.447315e-002, 8.545712e-002, 2.142723e-002, -4.311804e-002, -8.954297e-002, -6.755626e-002, -9.690906e-002, 8.535327e-002, 2.472257e-002, -2.986603e-002, -2.826758e-002, 1.345491e-002, 1.376014e-002, -5.528780e-003, -6.576269e-002, -4.844918e-002, -2.077834e-002, -3.063443e-002, -4.080965e-002, 4.544546e-002, -1.065703e-001, 7.279530e-002, -1.541676e-002, -1.454950e-003, -6.769649e-002, -1.931721e-002, -5.836681e-002, 5.911074e-002, -9.069903e-003, 6.686290e-002, 1.001817e-002, 2.090083e-002, 5.112017e-002, 2.228505e-002, -1.417433e-002, -5.468059e-002, 8.735018e-003, -2.283495e-002, -3.837610e-002, 8.708075e-003, 1.692480e-002, -7.970894e-003, 3.950875e-002, 5.254405e-002, -3.446439e-002, -1.397139e-001, 4.936183e-002, -9.120092e-002, -3.989306e-002, -6.712950e-003, -4.156968e-002, 9.380399e-002, -4.261417e-002, 7.358044e-003, 3.427463e-002, 7.312341e-003, -6.901770e-002, -8.718123e-002, -1.529518e-002, 3.883086e-002, 3.888298e-002, 5.003477e-003, -2.184401e-004, 5.434267e-002, 1.302693e-002, -2.164530e-002, -4.732664e-003, -4.097171e-002, -1.330661e-002, -8.240511e-002, 1.399541e-002, 6.544618e-002, -3.840511e-002, 2.299621e-002, -1.898957e-002, -5.361238e-002, -2.568414e-002, -1.988802e-002, -4.738634e-002, -3.628774e-002, 2.031973e-002, 2.968356e-002, -3.984136e-003, 2.928840e-002, 3.753336e-002, 1.860754e-002, 2.623073e-002, 3.227869e-002, -1.323791e-002, -3.960479e-003, 2.455305e-002, -3.702208e-002, -2.113304e-003, -3.923238e-002, -6.843017e-002, 4.369493e-003, -1.603321e-002, 1.621835e-002, 5.310370e-002, 1.219252e-002, 2.106254e-003, 4.193958e-003, 1.011028e-002, 6.112694e-004, 1.280512e-002, -9.821462e-003, 1.158289e-003, 2.879098e-002, 2.149607e-002, -2.716436e-003, -5.202723e-003, 2.361094e-002, -1.961584e-002, -5.082002e-003, 6.814794e-002, -3.280510e-002, -2.846982e-005, -6.865099e-002, 7.089772e-002, 1.033985e-002, -2.477247e-002, -2.484117e-002, 3.536842e-003, 5.349895e-002, 2.091874e-002, -2.641208e-002, 2.617024e-004, -2.980791e-003, 3.713379e-003, -1.633177e-002, 1.739294e-002, 3.246889e-002, -2.384296e-003, -1.357003e-003, 1.717577e-002, -2.687067e-002, 9.719904e-002, -9.487388e-002, -2.656250e-002, -3.937003e-002, 3.277300e-002, 1.773888e-002, -3.098744e-003, 2.525632e-002, -2.692692e-002, 2.203796e-002, 3.001236e-002, -2.202153e-002, 7.918328e-003, -2.961852e-003, 1.023857e-003, 2.227332e-002, 9.482418e-003, -1.586368e-002, -4.052163e-004, 4.631327e-002, -7.615549e-003, -1.358363e-002, 3.851019e-002, -4.688966e-002, 3.570913e-002, -7.718596e-002, -3.613284e-002, 3.066187e-002, 1.749105e-002, 1.667769e-002, 1.686905e-002, -2.586642e-002, 2.936897e-003, 2.237208e-002, 9.536010e-003, -2.789705e-002, 9.083521e-003, -3.274681e-003, 2.019898e-002, 2.123199e-002, 1.310996e-004, -6.737207e-003, -1.559367e-002, 8.874732e-003, -7.170746e-003, -4.753306e-002, -1.328104e-002, 8.325700e-003, -1.104312e-002, 1.137300e-002, -1.805177e-002, 3.606929e-002, 5.216172e-002, -7.444772e-003, -5.899021e-003, 2.574466e-002, 1.206736e-002, -3.832287e-002, 8.667094e-003, 1.756831e-003, 1.007835e-002, 2.396263e-003, 9.602492e-003, 4.142971e-003, -2.233960e-002, -3.848815e-003, -1.477450e-002, -1.047225e-003, -4.668722e-003, -3.588786e-003, -5.680042e-002, 3.864570e-002, 1.023017e-002, 4.402202e-002, -2.817384e-002, 2.773756e-002, 1.024838e-002, 9.369973e-003, 2.121766e-002, 1.625156e-003, -1.247823e-002, -1.857846e-004, 1.080697e-002, -5.093361e-003, 1.458289e-002, 1.124202e-002, -4.628548e-003, -1.081141e-002, -9.813648e-003, -6.914222e-003, -2.091628e-002, -2.042008e-002, 1.331060e-002, 2.684194e-003, -2.305027e-002, -3.518581e-017, 2.708904e-003, -1.361912e-002, -9.779348e-005, -1.488048e-002, 2.818949e-002, 6.596040e-003, 2.232683e-002, -9.272586e-003, 2.236628e-002, -2.395747e-002, -3.544263e-002, 3.544263e-002, 2.395747e-002, -2.236628e-002, 9.272586e-003, -2.232683e-002, -6.596040e-003, -2.818949e-002, 1.488048e-002, 9.779348e-005, 1.361912e-002, -2.708904e-003, -7.615129e-003, -1.570091e-002, -4.754361e-002, -4.086276e-003, 1.885399e-003, 5.493559e-002, -1.429011e-003, 3.619158e-002, 2.269044e-002, 3.203834e-003, -6.983050e-003, 9.234187e-003, -1.581004e-002, -7.036182e-003, 3.318691e-003, -1.103976e-002, 2.082532e-002, -3.069560e-002, -1.018911e-001, 5.118450e-003, -1.204074e-002, 4.843907e-002, 2.261059e-002, 1.709955e-003, 5.925388e-002, -9.588401e-002, -7.605930e-003, 1.109187e-002, -3.940608e-002, 1.309826e-001, 7.812449e-003, 8.503155e-002, 6.835584e-002, 3.542930e-002, -3.004874e-002, 1.519964e-002, 1.676166e-002, -2.373186e-002, 1.603836e-002, 2.526848e-002, -2.583252e-002, 9.710174e-003, 3.970775e-002, 5.277088e-002, 7.743892e-002, -3.661266e-002, -1.676745e-002, -1.116919e-001, 2.354770e-002, -1.019994e-001, 4.068869e-002, -1.560439e-002, -4.395648e-003, -4.982763e-002, -1.669661e-002, 5.171574e-002, -4.634307e-002, -4.671872e-002, -1.144751e-002, -2.162009e-002, 4.014642e-002, 1.680053e-002, 2.915424e-003, -


© ISO/IEC 2004 — All rights reserved

Copyright International Organization for Standardization
Provided by IHS under license with ISO
No reproduction or networking permitted without license from IHS
Not for Resale

7.325591e-003, -5.533862e-002, 2.221819e-002, 6.899383e-002, 5.974640e-002, 1.524946e-002, 7.141730e-002, 1.894676e-001, -4.464003e-002, 1.928819e-002, -6.106186e-002, 7.307416e-002, -4.802736e-002, -1.806171e-002, 4.016672e-002, -4.161160e-002, 9.231084e-003, -1.748490e-002, -3.804493e-002, -5.893513e-002, -1.045772e-001, -6.574239e-002, -1.882288e-002, 9.581865e-003, 1.084901e-002, 1.150086e-001, -1.753952e-001, -8.680685e-002, -1.318185e-001, 2.188055e-003, 7.632156e-002, -1.090662e-002, -3.903355e-002, 6.255439e-004, 3.998561e-002, 4.821725e-002, -1.357394e-002, -4.417277e-002, 3.027721e-002, 1.541081e-002, 5.823151e-002, 5.347388e-002, 5.573645e-002, 1.549283e-003, -5.486554e-002, -7.121302e-002, -8.438369e-003, -2.067955e-002, -1.783087e-002, 1.081790e-001, 4.111421e-002, 9.560463e-003, -5.799060e-002, -3.263706e-003, 7.031344e-002, -5.529520e-002, -1.576253e-002, 7.674657e-003, 2.178150e-002, 6.116776e-002, 5.248006e-002, 4.897126e-003, 3.129698e-002, -2.714670e-003, -1.733617e-002, -1.370149e-002, 2.118215e-002, -3.811013e-002, -4.283303e-002, 2.051754e-002, -3.768318e-002, 1.129625e-002, 2.939442e-002, 4.132888e-002, -1.128094e-001, -2.050154e-002, -4.990947e-002, 5.866325e-002, -1.076101e-001, 1.984388e-002, 5.093123e-002, -3.487217e-002, -2.107170e-002, -5.528453e-003, 1.009570e-002, -3.790404e-002, -2.043507e-002, -5.254786e-002, -5.646446e-003, -2.704823e-002, 3.546438e-002, 2.048289e-002, 1.063231e-002, 6.834879e-002, -5.746266e-002, -6.236180e-002, -5.144136e-003, 4.827043e-002, 7.014628e-002, -4.926203e-002, 3.276654e-003, -3.905221e-002, 9.375846e-002, -7.733545e-002, 1.439967e-004, 6.290655e-003, 2.266654e-002, -3.638582e-002, -8.517439e-003, 1.678210e-002, 4.825800e-003, -3.746546e-002, 2.012173e-002, -8.985135e-003, -1.027459e-002, 3.175823e-002, -3.549950e-002, -6.522212e-003, -2.880423e-002, -2.455964e-002, 1.154398e-002, -5.457780e-002, 2.726188e-002, -8.726166e-002, 2.181964e-002, -1.886458e-002, 2.331779e-002, 3.421111e-002, 3.498098e-002, -3.513004e-002, -1.420981e-002, -1.211737e-002, -7.086779e-003, -8.995103e-003, 1.338666e-003, -6.795587e-003, 1.091763e-002, 3.518112e-003, -3.734253e-003, 1.036197e-002, 1.338301e-002, 8.314375e-002, -7.715987e-002, 4.252883e-002, -1.398940e-002, -4.755273e-003, -4.936615e-002, -9.669300e-003, -3.801751e-002, 1.893766e-002, 2.748809e-002, -1.084279e-002, -2.158042e-002, -2.310134e-002, -9.749441e-003, 2.462414e-003, 1.708967e-002, 9.499318e-003, 2.196560e-003, 1.630323e-002, 1.285006e-003, 1.335240e-002, 5.748650e-002, -7.741750e-002, 5.722851e-002, 2.765025e-002, -5.843150e-002, -1.891849e-002, -3.797411e-002, 4.297191e-002, -3.352794e-002, -3.708359e-002, -2.135753e-002, 2.178233e-002, 1.379873e-003, -1.282765e-002, -1.725538e-002, 4.895701e-003, -3.017212e-003, -1.201490e-004, 4.813208e-003, 2.918255e-002, 2.408808e-002, -1.463471e-002, 2.613376e-002, 2.504026e-002, 1.683632e-002, -1.148502e-002, -1.940154e-003, -1.959614e-002, -5.485965e-002, 2.263668e-002, -2.142943e-002, -7.540098e-003, 2.549648e-003, 1.434324e-002, 1.426619e-002, -2.957329e-002, -1.341842e-002, 1.647854e-002, -1.078904e-002, -8.093255e-003, 5.662795e-003, 1.900442e-002, 2.907669e-003, 1.867663e-002, 2.824960e-002, -1.961377e-002, 1.183254e-002, -1.713551e-002, 1.854915e-003, -1.900849e-002, -1.320025e-002, 6.014647e-003, -6.193731e-003, 1.931561e-002, -9.524144e-003, 2.533692e-003, 9.406189e-003, -1.891438e-002, -1.089287e-003, 1.339347e-002, -1.090383e-002, 1.376861e-003, -4.344966e-003, 6.179817e-004, 2.671163e-003, 1.785109e-002, 1.186365e-002, -1.133302e-002, 8.494811e-003, 3.029472e-002, -4.736300e-002, -1.903164e-002, 2.825049e-002, -7.440238e-002},

{3.543156e-003, -1.141414e-002, 1.790128e-002, -3.630773e-003, -2.661123e-002, 6.013576e-002, -1.370330e-002, -3.637466e-003, -2.015445e-002, 3.335464e-003, 2.397479e-002, -2.204434e-002, -2.204434e-002, 2.397479e-002, 3.335464e-003, -2.015445e-002, -3.637466e-003, -1.370330e-002, 6.013576e-002, -2.661123e-002, -3.630773e-003, 1.790128e-002, -1.141414e-002, 1.825338e-003, -3.216453e-002, -3.831673e-003, 4.224415e-002, 2.949896e-002, -2.221160e-002, 7.510979e-004, 1.349893e-002, -1.259164e-003, -4.579533e-002, 4.689774e-002, 6.222955e-002, 3.227508e-002, -3.013398e-003, 2.717028e-002, 8.282063e-002, 3.877107e-002, -8.886885e-002, 5.045234e-002, 3.679701e-002, -4.437247e-002, -1.265709e-002, 2.040584e-002, -1.374915e-002, 4.700792e-002, -2.720478e-002, 5.811242e-003, -4.512395e-002, -1.235716e-002, 4.757648e-002, 4.845025e-002, 1.986970e-002, -3.523473e-002, -7.824288e-002, -3.786799e-002, 3.808016e-003, -1.475412e-002, -1.864101e-002, 2.234933e-002, -2.810148e-002, 1.111018e-002, -1.892951e-002, -6.410429e-003, -3.176340e-002, 7.529774e-003, -2.890570e-002, 7.417822e-002, -2.084037e-002, 3.033927e-002, -8.501723e-003, -1.763844e-003, -3.348949e-002, 3.797013e-002, -2.487764e-002, 1.818880e-002, 4.015120e-002, 1.105672e-002, -2.136381e-002, -4.143329e-003, -3.050249e-002, -2.119925e-002, -5.248415e-003, 1.048477e-001, 7.408486e-002, -7.352911e-002, 1.953993e-002, -2.561801e-002, -6.371163e-002, 1.199163e-001, 4.297826e-002, -1.454995e-003, -1.066259e-001, 9.128780e-002, -7.134019e-002, 2.435798e-002, -5.724863e-002, -4.285093e-002, -4.278030e-002, -3.056999e-002, -7.763543e-003, -1.670610e-002, 3.208074e-002, 5.605326e-002, -4.797701e-004, 2.376961e-002, 4.164210e-002, -7.566459e-002, -9.156662e-003, -9.975664e-002, -8.096960e-002, 9.133236e-002, 2.778233e-002, 4.363896e-002, -3.595118e-002, -4.457467e-002, 2.102522e-002, -3.070419e-002, 2.431234e-002, 4.572177e-002, -7.456050e-002, -1.636643e-002, -1.612518e-003, -3.614086e-002, -2.291906e-002, -2.357785e-002, -4.879163e-003, 4.401892e-002, 9.307345e-003, -4.079817e-002, 1.222420e-001, -7.237798e-002, 7.215060e-002, -3.535272e-002, 5.197466e-002, 1.101215e-001, -2.912094e-003, -1.172383e-001, 4.212914e-002, -2.234322e-002, -2.385351e-002, 1.039786e-001, -

© ISO/IEC 2004 — All rights reserved


Copyright International Organization for Standardization
Provided by IHS under license with ISO
No reproduction or networking permitted without license from IHS
Not for Resale

4.268331e-002, -8.623358e-003, 1.016914e-003, -2.216712e-002, -1.487023e-002, 7.980799e-003, 6.811351e-003, -3.932068e-004, 9.160662e-003, -3.764938e-003, 4.231977e-002, -5.112255e-002, 5.298317e-002, -2.191099e-002, -1.709978e-003, -4.357637e-002, -1.179189e-001, 4.357174e-002, 7.741155e-002, -5.700079e-002, 6.469905e-002, -1.454987e-003, -4.557861e-002, -6.097812e-003, 1.458063e-002, 2.093002e-002, 1.183285e-002, -1.260111e-002, 1.423836e-002, -1.559830e-002, -5.980304e-003, 1.381472e-002, 1.268647e-002, -3.698533e-002, 9.300824e-002, 8.827164e-004, -8.273892e-002, 1.023420e-001, -1.967548e-002, -1.523483e-001, 5.223578e-003, 4.349994e-002, 7.743680e-003, 4.779431e-002, 1.158286e-002, -4.203881e-003, -6.751832e-003, 2.023240e-002, -1.733139e-002, -4.405347e-002, 1.272396e-002, -3.422707e-004, -6.678181e-003, -8.023002e-003, 2.532611e-003, -2.020166e-002, 1.489746e-002, 3.303326e-003, 4.607712e-002, 3.167173e-002, -3.095509e-002, 3.879346e-002, -8.504155e-002, 4.105505e-002, 3.624217e-002, 1.240528e-002, 2.560161e-002, -2.383721e-002, -3.663492e-003, 3.775806e-003, 2.059412e-005, -5.362334e-003, -9.001605e-003, -1.231887e-002, 1.360453e-002, 7.784143e-004, -8.467926e-003, -3.462175e-002, 2.214639e-002, 8.940456e-003, 1.365951e-002, 1.431691e-002, -4.918471e-002, -3.408092e-002, 4.957203e-002, -3.337818e-002, -9.252798e-002, 9.303643e-002, -5.121115e-002, 9.423243e-004, -2.832910e-002, -1.703524e-002, 6.305192e-002, 8.812147e-003, -1.314982e-002, 8.261189e-003, 1.147536e-002, -1.119659e-002, -1.734698e-002, -4.983802e-003, 1.665097e-002, -2.796782e-002, 2.086298e-002, 7.106257e-002, -1.775403e-002, -1.603780e-002, -2.653637e-002, 1.416644e-002, 1.303856e-001, 1.027514e-002, -1.132356e-002, -2.205858e-002, -1.556219e-002, -4.181921e-004, 2.905932e-002, -1.777965e-002, 4.673637e-003, -2.694126e-003, -1.378597e-002, 6.254471e-003, 1.617285e-003, 7.712934e-003, 2.462746e-003, -2.102272e-002, 1.818057e-002, 3.273159e-002, -3.835705e-002, 2.815291e-002, 4.412771e-002, -2.067556e-002, 2.872509e-003, -2.658823e-003, 3.813329e-002, 9.064894e-004, -4.484610e-002, 4.351197e-002, -4.210711e-002, -2.031564e-002, -2.740285e-003, 2.386628e-003, -6.999529e-003, 4.153782e-005, 9.518109e-004, -2.428559e-003, 7.600433e-003, 1.142150e-002, 9.178631e-003, -8.971975e-004, -8.076659e-003, 4.629161e-002, -1.392126e-002, -2.756429e-002, 3.917906e-002, 1.020829e-002, -6.204388e-003, -6.842330e-002, 2.281920e-002, 2.382232e-002, -3.296929e-003, -8.646404e-003, -6.656561e-003, 1.565435e-002, -7.122035e-003, 1.082655e-003, -1.330968e-005, 1.826551e-003, 1.926574e-003, -3.068201e-003, 3.094070e-003, 1.449349e-002, -4.542908e-003, -9.314902e-003, 1.940194e-002, 1.134304e-002, 1.340903e-002, -2.925043e-002, 3.548413e-002, 1.264590e-002, -3.172357e-017, -7.897833e-003, -6.329719e-003, 3.639004e-002, -3.631363e-002, 1.156184e-002, 5.583062e-002, -5.665145e-002, 9.002136e-003, 2.221158e-002, -4.104181e-003, -2.576833e-002, 2.576833e-002, 4.104181e-003, -2.221158e-002, -9.002136e-003, 5.665145e-002, -5.583062e-002, -1.156184e-002, 3.631363e-002, -3.639004e-002, 6.329719e-003, 7.897833e-003, 1.193495e-002, 4.217939e-002, -4.580317e-002, -1.729781e-003, 6.791941e-002, -3.672583e-002, -2.482165e-002, 7.622620e-002, -4.804200e-002, -6.636228e-002, 2.667747e-002, 4.261455e-002, -1.013323e-001, -5.879973e-002, -1.945265e-002, 4.628424e-002, 4.326661e-002, -6.996685e-002, 5.480042e-002, -1.147432e-003, -5.110803e-002, 2.284563e-002, -3.639946e-002, 5.545265e-002, -1.678627e-002, 7.150790e-002, -8.451493e-002, -3.413210e-002, 4.720629e-002, 8.957393e-003, -1.761451e-002, 1.320203e-002, 2.663742e-002, -5.173224e-003, -1.622522e-002, 7.028213e-002, 6.397724e-003, -7.650832e-003, -1.976434e-002, -1.738991e-002, 3.267950e-002, -1.312243e-001, -3.064760e-002, -1.630063e-002, 2.247414e-002, 3.156236e-002, -4.089905e-002, 3.210830e-002, -2.367323e-002, -2.790426e-002, -2.148732e-002, -2.304962e-002, 2.484527e-002, -2.271062e-002, -5.032816e-002, -9.029267e-002, -5.638244e-002, -2.736792e-002, -9.904800e-003, 7.628103e-003, -3.937079e-002, -2.572510e-002, -4.411106e-002, -7.808378e-003, 6.347859e-002, -9.510782e-002, -8.400561e-003, -1.497824e-002, -1.980361e-002, -1.509496e-002, -3.126746e-002, -5.553516e-002, 1.576248e-001, -5.387638e-002, -4.354487e-003, -7.087478e-003, -1.284104e-002, -1.314256e-002, 2.342524e-002, -1.219520e-002, 1.072665e-003, 2.286623e-002, -3.184750e-002, -2.818315e-002, 4.284313e-003, 1.615906e-002, 1.456815e-002, -4.611983e-002, 7.954867e-002, 1.272888e-001, -3.119253e-002, 1.037573e-002, -6.459415e-002, 4.936123e-002, 1.417769e-002, -5.144040e-002, -5.703136e-002, 5.310737e-002, 9.856374e-003, -4.827775e-002, 3.681224e-002, 2.753468e-002, 2.631404e-002, 9.833485e-003, -7.995205e-003, -3.211426e-003, -4.314142e-002, -1.874503e-002, 3.827285e-002, -5.341133e-002, -2.863454e-003, -1.150344e-002, 3.205060e-002, 7.253006e-002, 3.565994e-003, -4.460459e-002, 1.194945e-001, -5.674245e-002, -3.024734e-002, 9.956769e-002, 4.833913e-002, -8.286320e-002, 1.783793e-002, -7.558774e-003, -1.338490e-002, -1.451101e-002, -1.224935e-002, 2.563194e-002, 1.515315e-002, -2.252250e-002, -4.582448e-002, -1.426510e-002, -4.392282e-002, -5.663068e-002, -1.346709e-002, -1.560178e-002, -1.832388e-002, -8.536608e-002, 9.371629e-002, 7.131123e-002, -5.929196e-002, 5.539680e-002, -6.327640e-002, -4.491993e-002, 3.727459e-002, -3.436903e-002, 2.337590e-002, 8.052725e-004, -3.587939e-003, 2.216069e-002, -1.013131e-002, 4.265670e-003, 3.560796e-002, 3.088433e-002, -7.667151e-002, 2.265244e-002, -1.473815e-002, -7.985247e-002, 7.143923e-002, 4.680783e-002, 2.447413e-002, -9.462928e-002, 3.631347e-003, 2.789465e-002, 2.326747e-002, 1.847250e-002, 7.662757e-003, 9.874886e-003, 4.231425e-002, -1.482056e-002, -1.879293e-002, 1.052504e-002, -4.116387e-003, -3.470872e-003, -3.161950e-002, -1.474272e-002, -7.988159e-003, 3.142294e-002, -6.334022e-002, 1.432671e-003, 1.258751e-002, -3.690506e-002, -8.295817e-003, -


© ISO/IEC 2004 — All rights reserved

Copyright International Organization for Standardization
Provided by IHS under license with ISO
No reproduction or networking permitted without license from IHS
Not for Resale

5.618244e-002, -1.185473e-001, 7.936283e-002, 8.114052e-002, -2.398943e-002, -3.114629e-002, 2.626656e-002, -1.400900e-002, -1.380007e-002, -1.133818e-002, -2.407618e-002, 8.193028e-003, 6.116135e-003, 2.905351e-003, 1.708626e-002, -3.502315e-002, -2.661163e-002, -3.917949e-002, -9.487944e-003, 4.589300e-002, -2.938524e-002, -2.159068e-002, -1.362023e-002, 3.901707e-002, 2.171926e-002, 4.506222e-002, 1.119517e-003, 1.163609e-002, -2.305074e-002, 1.373845e-002, 3.182819e-002, -2.833864e-002, -1.406998e-002, 1.994141e-003, -1.164363e-002, 3.104669e-003, 1.189425e-002, -1.251648e-002, -1.214867e-003, -1.502918e-002, -1.986198e-002, 1.506197e-002, -3.477966e-002, 1.927411e-002, -3.820222e-002, -7.135590e-002, 1.895905e-002, 9.103802e-002, -1.949732e-003, 1.537641e-002, -1.983704e-002, 2.435992e-002, 1.991191e-002, -9.524462e-003, 2.814119e-003, 3.361465e-003, -1.585913e-003, 5.233157e-003, -1.118583e-002, -3.178096e-003, 9.108423e-003, -8.658339e-003, -1.371272e-002, 2.453740e-002, -2.097146e-002, -1.105150e-002, -1.464904e-002, -4.974966e-002, 3.955176e-002, -7.335904e-002, 4.557355e-002, -9.915903e-003, -1.400733e-002, -1.511489e-002, -4.615049e-002, 1.275589e-002, 1.614259e-002, -2.794475e-003, -6.232347e-003, -7.887902e-003, -2.204902e-003, 1.300352e-002, 1.582156e-003, 3.599250e-003, 8.607823e-003, -3.967107e-003, -2.694310e-002, 3.215502e-002, 2.122948e-002, -7.248746e-002, 2.450569e-002, 3.113707e-003, -1.164838e-002, -1.084348e-002, 3.169869e-002, 2.011122e-002, -5.451999e-002, -7.149184e-003, 3.373564e-002, -1.367171e-002, -1.049228e-002, 5.328455e-003, -8.927675e-003, 5.553178e-004, -1.405173e-002, -7.014497e-003, -7.875312e-003, 3.686860e-003, 1.017012e-002, 1.202461e-002, -3.177537e-002, 1.077946e-002, 1.739136e-002, -4.960202e-002, 1.063320e-002, 5.692813e-003},

{-2.140714e-003, -1.012242e-003, -5.437797e-003, 1.028776e-003, -7.433783e-003, -1.685863e-002, -2.872590e-002, -5.129101e-003, -1.188983e-002, 1.398812e-002, 5.154316e-002, -4.786968e-002, -4.786968e-002, 5.154316e-002, 1.398812e-002, -1.188983e-002, -5.129101e-003, -2.872590e-002, -1.685863e-002, -7.433783e-003, 1.028776e-003, -5.437797e-003, -1.012242e-003, -3.593416e-003, -3.769083e-002, 4.541591e-002, -5.916384e-002, 2.294069e-003, 1.917054e-002, -3.592342e-002, 3.491122e-003, 3.103150e-002, 6.159976e-002, -4.629748e-002, -1.617780e-002, 4.960926e-002, 1.758873e-002, 1.900824e-002, -3.980226e-002, -5.603065e-002, -1.139157e-001, 1.431556e-001, -9.692768e-002, 2.630867e-002, -2.456054e-002, 4.103564e-003, 2.028879e-002, -6.275641e-002, -8.520356e-003, -6.137554e-002, -9.367708e-002, -9.129759e-003, -1.824648e-002, -7.225429e-002, -8.749772e-002, -2.129564e-002, 8.832560e-002, 3.719743e-002, 8.727821e-003, 3.738566e-002, 5.915853e-003, 2.248195e-002, 3.344372e-002, 9.169375e-002, 2.553040e-002, 5.096348e-002, -3.380101e-002, 3.349013e-003, -2.470629e-002, 2.760643e-002, 7.984827e-002, -4.191224e-002, 1.497907e-001, 1.160692e-002, -3.000610e-002, 1.152035e-003, 1.263414e-002, 2.657014e-002, -1.183836e-004, -3.406873e-002, -5.724393e-002, -5.206349e-002, -5.702541e-002, -5.483016e-004, 4.006674e-002, 2.549961e-002, -2.378190e-002, -2.540156e-002, 1.033040e-001, 1.548550e-002, -7.341668e-002, 8.601035e-003, 8.719918e-002, 1.814688e-001, -5.616294e-003, -1.875680e-002, -8.172758e-002, 2.957216e-002, -5.990474e-002, -2.029367e-002, 4.730580e-003, -1.512102e-002, -1.251056e-002, 1.307008e-003, 4.654671e-002, -1.661490e-003, -6.044189e-002, -5.068948e-003, 2.598479e-002, -4.176399e-003, 1.731153e-002, -1.085836e-001, -9.439425e-002, -8.312364e-002, 6.859021e-002, 5.679393e-002, 4.437000e-002, -3.386628e-002, -4.496559e-002, 1.760334e-001, -3.254696e-002, -2.964223e-002, -8.473562e-004, -2.348403e-002, 5.628109e-004, 3.693703e-002, 3.981704e-002, 1.361646e-002, 2.502322e-002, -5.650501e-003, -3.630051e-002, -1.026038e-002, -1.169974e-002, -1.147357e-001, 7.952149e-003, -7.625731e-002, -7.798355e-003, -5.758612e-002, 5.854068e-002, 5.840161e-002, -2.783353e-002, 3.604336e-002, 5.419304e-003, -4.722128e-002, 5.986745e-002, 2.594741e-002, 8.829735e-003, -1.131271e-002, -1.380714e-002, -2.022570e-002, -2.413385e-002, 6.253231e-003, 2.683522e-002, -1.977148e-002, -3.028328e-002, 3.611523e-002, -1.157231e-002, 3.990057e-002, -5.469960e-002, 4.289952e-002, -2.924827e-003, -9.249875e-002, -5.446312e-002, 3.219713e-002, -1.145784e-002, -9.458877e-002, 3.271550e-002, -2.791507e-002, 3.175792e-003, 1.198346e-002, -1.149018e-002, 4.014736e-003, 2.458766e-002, -5.060789e-003, -2.116518e-002, -1.365808e-002, -4.342728e-003, -1.105709e-002, -5.886004e-005, 4.960751e-002, 3.285956e-002, 1.284230e-003, 5.041257e-002, -4.907225e-002, -1.304930e-001, 4.925682e-002, -8.972910e-002, -2.371701e-002, 2.520498e-002, -3.003279e-002, 2.543563e-002, -1.030437e-002, 3.718405e-004, 2.633856e-002, 5.193813e-003, -7.143991e-004, 5.486318e-004, 1.925903e-002, 1.004619e-002, 1.147015e-002, 6.464223e-004, 6.727309e-002, -1.002061e-002, -4.039174e-002, -5.458238e-002, -2.305702e-002, 4.213293e-002, -1.173500e-002, 3.444396e-002, -6.131044e-002, -1.994306e-002, 2.209262e-002, 4.053267e-002, -4.458298e-002, -3.050907e-003, -1.208231e-002, 1.475143e-002, 9.245263e-003, -7.542508e-003, 7.931781e-003, 7.316301e-003, 2.080293e-002, 7.681465e-003, 1.647635e-002, -7.640254e-003, 1.195402e-002, -2.346111e-002, -1.175752e-001, -2.274723e-002, 9.870923e-002, 7.672548e-002, -1.124263e-002, -3.064985e-002, 5.299067e-003, 1.124506e-002, 5.913299e-002, -7.612716e-003, -4.027361e-002, 1.136121e-002, -1.144250e-002, -5.918483e-003, -1.333918e-002, -7.013155e-003, 5.299174e-003, 1.625975e-002, 2.678242e-002, -1.177386e-002, -4.176308e-002, -7.691021e-003, -4.154001e-002, -3.407020e-002, -2.393510e-002, 3.976486e-002, 3.520068e-002, 9.568127e-002, -5.868892e-002, 2.296763e-002, 7.254284e-002, -7.603053e-003, -1.954139e-003, 2.542166e-003, -2.599612e-002, 1.602498e-002, -8.985787e-003, -

© ISO/IEC 2004 — All rights reserved


Copyright International Organization for Standardization
Provided by IHS under license with ISO
No reproduction or networking permitted without license from IHS
Not for Resale

8.220453e-004, 3.080508e-004, -4.046516e-003, 1.714264e-002, 1.809962e-002, -9.589703e-003, 6.682882e-003, -4.911739e-002, -3.562840e-002, -2.723193e-002, 3.838045e-003, 4.934163e-002, -2.186243e-002, 1.595016e-002, 1.467901e-003, 2.852594e-002, 3.361204e-002, 5.092817e-002, -2.446769e-002, 8.306587e-003, 2.105088e-003, -1.635275e-002, 1.620094e-003, -1.438231e-002, -2.573842e-003, -8.979709e-003, -2.677214e-003, 1.537945e-002, 1.427291e-002, -4.588691e-002, -1.407477e-003, 2.043154e-002, -2.308810e-002, -2.360147e-002, 7.929045e-002, 1.129544e-002, 1.722364e-002, -4.245583e-002, 2.967954e-002, 1.141255e-002, 2.307530e-002, 2.438617e-002, -9.993659e-003, -5.879461e-003, 3.411998e-003, -8.521092e-003, -2.228196e-004, -1.422636e-003, -7.779527e-004, 5.924410e-003, 1.171590e-002, -1.217430e-003, 7.028846e-003, -1.770361e-002, -1.443295e-002, 3.858573e-002, -2.531021e-002, 1.249609e-002, 5.667139e-017, -4.452270e-003, -2.615315e-003, -1.333364e-002, 1.167576e-002, 1.314423e-004, -3.247776e-002, -6.512888e-003, 1.523041e-002, -5.914092e-002, 5.296870e-002, 6.396053e-002, -6.396053e-002, -5.296870e-002, 5.914092e-002, -1.523041e-002, 6.512888e-003, 3.247776e-002, -1.314423e-004, -1.167576e-002, 1.333364e-002, 2.615315e-003, 4.452270e-003, 1.515491e-002, 4.805591e-002, -3.613941e-002, -1.026090e-002, -6.165842e-002, 3.502964e-002, -6.357021e-002, -7.250325e-002, -4.178075e-002, -4.521224e-002, -8.897441e-002, -7.085400e-002, -5.513940e-003, 1.599153e-002, 1.201634e-002, 6.570098e-002, 5.148980e-002, -5.520684e-004, 4.696444e-002, 4.850508e-003, -3.052186e-002, 5.657525e-002, -1.757496e-002, 1.113339e-002, -6.120187e-003, 1.061207e-001, 4.558199e-002, 5.027545e-002, -1.769857e-002, 1.964844e-002, 4.330821e-002, 1.285467e-002, -1.718415e-003, -1.210696e-002, -6.459066e-003, -2.378184e-002, -2.497635e-002, -3.569399e-002, 1.325168e-002, 4.387967e-002, -1.424297e-002, -5.084710e-002, 7.661199e-002, -2.217434e-002, -7.618237e-002, 6.906801e-003, 4.174203e-002, 4.064389e-002, 3.901602e-002, 4.540373e-002, 1.790003e-002, 1.983845e-002, 3.868842e-002, -6.461795e-002, 5.860292e-003, 3.271645e-002, 2.325903e-002, -9.753282e-004, 1.667565e-002, 4.079898e-002, 1.973007e-002, -5.333211e-002, -3.488548e-002, 5.599726e-002, -3.890014e-002, -2.831680e-002, -8.916239e-002, -5.402481e-002, -2.400504e-002, -1.842497e-003, 1.966211e-002, -6.055404e-002, 9.365234e-003, -5.287631e-002, -9.988917e-004, -3.932401e-002, 3.031555e-002, 2.264275e-002, 1.065277e-002, 9.312127e-003, 3.428692e-002, -2.122054e-002, -1.561190e-002, -4.214439e-002, -5.030279e-002, 1.948197e-002, -6.606590e-003, -4.118895e-002, -2.497580e-002, -8.717035e-003, 7.142088e-002, 8.989391e-002, -1.352415e-001, 6.189399e-003, 5.154968e-003, -1.135969e-002, 5.348528e-002, -2.018608e-002, -2.223466e-002, -3.977235e-002, -3.808851e-002, -5.561821e-002, -1.300755e-003, 3.074223e-003, 6.478606e-002, 3.048201e-002, 6.606159e-003, -7.290911e-003, -4.851793e-002, 2.500305e-002, 5.211109e-002, 2.055475e-002, 2.311876e-002, 5.927003e-003, -5.703887e-004, 9.325396e-002, 8.688844e-002, 3.245078e-002, -1.147978e-001, 8.270788e-004, -5.359708e-003, 5.418577e-003, 1.467508e-002, -3.507882e-002, 4.021621e-002, 5.646537e-002, 1.403663e-002, -3.290532e-003, 4.444465e-002, 3.172520e-002, -1.965252e-003, 2.661583e-002, -6.801839e-002, -5.634407e-002, -2.344473e-002, -7.125535e-002, 8.961449e-003, 8.503567e-002, -5.098943e-002, 3.100103e-003, -1.899149e-002, -1.144449e-002, 7.243254e-002, 9.300488e-003, 3.167824e-002, -8.078657e-003, -1.580947e-002, -3.910925e-003, -1.012024e-002, -3.524012e-003, -1.376809e-002, -2.321072e-003, -6.544430e-003, -2.888780e-002, -1.460113e-002, 4.031683e-002, -6.192316e-002, 1.059251e-001, 1.190066e-002, 8.333226e-002, -5.201979e-002, -2.062884e-002, -6.387192e-002, 7.170799e-003, 5.282770e-002, -6.643062e-002, 1.025387e-002, -1.202949e-002, -1.121117e-002, 2.114024e-002, 1.789868e-002, -7.832259e-003, -4.956790e-004, -1.496864e-002, 1.071095e-002, 3.312547e-002, -4.049244e-002, -5.315892e-002, 2.729476e-002, 7.815820e-002, -2.543408e-002, 3.364564e-002, 7.306836e-002, -2.255774e-002, -3.736224e-002, -1.182041e-001, 3.107659e-002, -6.602662e-003, 1.581275e-002, -2.440340e-002, -4.703110e-002, 1.458883e-002, 5.556873e-003, -8.317338e-003, -1.510813e-002, 1.927305e-003, -2.108200e-002, -1.059595e-002, 3.578043e-003, 3.571257e-002, -7.687460e-003, -8.241025e-003, 8.321654e-003, 5.701588e-002, -2.833070e-002, -1.134157e-002, -1.910974e-002, -8.789594e-002, 9.095052e-003, -3.676660e-002, -1.168022e-002, -3.616749e-003, -2.857887e-002, -3.956940e-002, -4.359773e-003, -1.129524e-002, -3.284553e-003, 1.089504e-002, 2.318058e-003, 8.072926e-004, -1.153389e-002, 1.712950e-002, 1.048401e-002, 3.178159e-002, 2.300134e-002, -4.761624e-003, -1.127283e-002, -1.936176e-002, 1.913372e-002, 2.391013e-002, 3.364630e-002, -4.359061e-002, -3.598997e-002, 1.754904e-002, -6.153618e-003, -3.432486e-002, -1.614487e-002, -2.059862e-002, 7.139223e-004, 4.574113e-003, -7.952447e-003, 6.839621e-003, -8.390524e-003, 1.716215e-004, -1.068801e-003, 1.507532e-002, 2.059488e-002, -4.203567e-003, 1.256739e-002, -3.237962e-002, -1.261248e-002, -4.862335e-002, 4.952632e-002, 2.101420e-004, -1.243501e-002, 2.686575e-002, -1.060897e-003, 2.387586e-002, -1.996108e-002, -2.646051e-002, -1.262821e-002, -1.546281e-002, 5.611298e-003, 3.868342e-003, -8.612983e-003, -3.946807e-003, -1.009455e-002, 2.489450e-003, 3.385558e-003, 1.536553e-002, 1.769149e-002, -4.919265e-002, -5.497147e-004, -2.646185e-002, -8.963260e-003, 3.348031e-002, 2.140793e-002, 8.067001e-003, -2.694592e-002, 3.880594e-002, 1.575823e-002, -1.615729e-002, -1.608140e-002, -8.822712e-003, -7.950510e-003, -4.845262e-003, -1.219765e-003, 6.247619e-003, -4.564020e-003, -4.428887e-003, -3.431787e-004, -7.233321e-003, 9.844151e-003, 7.230361e-003, -1.052549e-003, -3.411876e-002, 8.102325e-003, 2.059203e-002, 1.562805e-003},


© ISO/IEC 2004 — All rights reserved

Copyright International Organization for Standardization
Provided by IHS under license with ISO
No reproduction or networking permitted without license from IHS
Not for Resale

{2.197853e-004, -7.383516e-003, 1.059089e-002, -2.240340e-002, 4.364727e-002, -4.271060e-002, 3.664701e-002, 1.489879e-002, -2.960206e-002, 3.390736e-002, 2.122263e-002, 1.036393e-002, 1.036393e-002, 2.122263e-002, 3.390736e-002, -2.960206e-002, 1.489879e-002, 3.664701e-002, -4.271060e-002, 4.364727e-002, -2.240340e-002, 1.059089e-002, -7.383516e-003, -8.661420e-003, 2.674311e-002, -5.576543e-002, -5.291517e-002, 1.358805e-001, -1.588504e-001, 4.852949e-002, 5.125449e-002, 1.578899e-002, -2.774025e-002, 6.100557e-002, 3.651100e-002, -4.493524e-003, -3.251201e-003, -8.660968e-004, 8.629115e-003, -2.614442e-002, -2.215592e-002, -3.239151e-003, 7.243950e-002, -5.463781e-002, -3.702485e-002, 2.771850e-002, 2.238530e-002, -3.357573e-002, 4.484691e-002, -8.171322e-002, 6.177643e-002, 6.513036e-002, 1.394221e-002, -2.178719e-003, 6.281863e-003, 4.091559e-002, -4.153924e-002, -5.791973e-003, -3.408549e-002, -4.107762e-003, 2.060936e-002, 3.716762e-002, 1.785858e-002, 9.524229e-003, 7.229085e-002, 2.135155e-002, -2.899534e-002, 1.612064e-002, 3.942388e-002, 2.398689e-002, 5.275667e-002, 6.850187e-002, -5.260703e-002, -1.374164e-002, 1.280174e-001, 4.979913e-002, -2.552954e-002, 5.769904e-002, -1.399564e-002, 1.359820e-002, 5.568196e-003, -7.449125e-003, -5.622712e-002, 2.547005e-003, -1.047038e-002, 1.089178e-002, -4.838933e-003, 2.664845e-002, -5.303227e-002, -4.245804e-002, 1.864288e-002, 6.495760e-003, -1.235406e-001, -8.279414e-002, 7.334169e-002, -1.477454e-001, -9.965773e-002, -1.173746e-001, -1.428792e-002, 7.812075e-002, -3.422765e-002, 6.305107e-003, 2.279776e-002, 4.564778e-002, 3.182004e-002, 4.807430e-002, 1.644272e-002, 2.993104e-002, 1.706170e-002, -4.035271e-002, 6.951256e-002, -7.510881e-002, 1.973789e-002, 4.736616e-002, 7.654485e-002, 1.231039e-001, 2.370873e-005, 4.497030e-002, 1.624442e-002, 1.249984e-001, 2.562025e-002, -4.641884e-003, 2.157784e-002, 1.283485e-002, -1.031342e-002, -1.148661e-002, -6.298330e-002, -5.516395e-003, -1.194506e-002, 2.113389e-002, 2.762865e-002, -1.516266e-002, 1.483311e-002, 3.129610e-002, 1.044192e-001, -1.155001e-002, -1.799071e-002, 4.630970e-002, -3.271101e-002, -4.792127e-002, -3.532911e-002, -3.755100e-002, -4.098963e-002, -2.110755e-002, 3.203809e-002, 6.901224e-003, -4.254643e-002, -4.070152e-002, -4.159767e-002, -1.227677e-002, -2.269694e-002, -1.787987e-002, 7.959196e-003, 3.841419e-002, 7.554244e-002, 1.088187e-002, -1.581977e-002, 1.690311e-002, 1.709673e-003, 1.212648e-001, 4.523361e-002, 1.055402e-001, 1.143430e-001, 5.604831e-002, 2.654075e-002, 3.142989e-002, -7.727246e-004, 1.246583e-002, -4.861219e-002, -4.805482e-003, 1.305229e-002, 2.841491e-002, 2.763581e-002, -4.839593e-003, 1.071056e-002, 2.666691e-004, 1.236422e-002, 3.800547e-002, -6.685638e-003, 2.046130e-002, -9.032932e-002, -7.242675e-002, -2.607489e-002, 2.351886e-002, 8.746700e-002, 1.600529e-002, 1.260077e-002, -2.397693e-002, 6.012201e-002, 4.731533e-002, 8.392003e-003, 1.249321e-002, 3.427669e-003, -2.837307e-003, -1.584398e-002, -1.158720e-002, -2.670601e-003, -1.603386e-003, 1.919197e-002, -9.193217e-003, -5.887064e-002, 8.372311e-003, 1.291602e-002, 4.670990e-002, -1.318242e-002, -1.269392e-002, -8.267795e-003, 7.606696e-002, 7.981280e-003, 2.233747e-002, -2.681285e-002, -3.673281e-002, -4.624110e-002, 2.314141e-002, 4.139950e-002, 2.994145e-002, -3.032349e-002, -1.601987e-002, -1.468907e-002, -1.234236e-002, -2.596541e-002, -6.633859e-003, 1.370756e-003, 8.762262e-003, -2.428706e-002, 2.146476e-002, 4.754153e-002, -8.705808e-002, -4.500266e-002, 2.074366e-002, 9.823960e-002, 3.231388e-002, 8.229835e-003, 6.047243e-003, -4.035314e-002, 2.962190e-003, 4.653793e-002, 5.615629e-003, -3.278789e-002, -1.325664e-002, -1.515823e-002, 2.438583e-004, 9.672363e-003, -3.053629e-002, -4.736105e-002, -2.205506e-002, 1.486295e-002, 4.986879e-002, 4.404056e-002, -3.336400e-002, 1.244939e-002, 6.059696e-003, -8.372704e-002, -5.348201e-002, 2.877077e-002, 2.641603e-003, -4.946439e-002, 8.025201e-003, 1.034439e-002, -1.653566e-002, -2.100323e-002, 9.913516e-004, -1.516615e-002, 1.010285e-002, -5.540954e-003, 8.189095e-003, -1.447781e-002, -3.844348e-002, -5.133381e-003, 1.607937e-002, 2.073498e-002, 1.712201e-002, 2.708500e-002, -1.292381e-002, -4.467171e-002, 7.389479e-002, 1.268367e-004, 1.134362e-002, 1.557250e-002, 1.604040e-002, 5.412601e-003, -2.362940e-002, -2.574159e-003, 2.728262e-003, -1.980671e-002, 6.102959e-003, -9.231947e-003, 9.650178e-003, 1.275992e-002, -4.972446e-003, -2.080939e-002, -1.954179e-002, 3.070695e-002, 2.334945e-002, -1.378927e-002, 2.245247e-002, -1.054121e-002, -4.950553e-002, 6.009159e-002, 1.652488e-002, 1.521816e-002, 3.695204e-003, 1.332010e-002, -1.299299e-002, 1.281728e-002, -2.526087e-003, -3.419422e-003, 3.066293e-003, -5.868113e-003, 1.199644e-002, -2.766117e-003, 6.203526e-003, 9.755682e-003, -1.763495e-002, -1.662703e-002, 1.058023e-002, 3.467381e-002, 2.790362e-002, -5.299466e-002, 6.002156e-004, 3.024221e-002, -2.355679e-002, -8.086519e-017, 2.129589e-003, -2.090538e-002, 1.167376e-002, 6.580823e-003, -3.049504e-002, 4.044763e-002, -1.877280e-002, 2.512747e-002, 4.303858e-003, 1.837727e-002, -9.022465e-003, 9.022465e-003, -1.837727e-002, -4.303858e-003, -2.512747e-002, 1.877280e-002, -4.044763e-002, 3.049504e-002, -6.580823e-003, -1.167376e-002, 2.090538e-002, -2.129589e-003, -7.153837e-003, 1.336872e-002, -3.343971e-003, -6.109793e-002, 3.180963e-003, 4.613008e-002, -3.896771e-002, 3.142892e-002, 1.498659e-002, 3.850175e-002, 2.260939e-003, -1.225096e-003, -2.014868e-002, -1.014130e-003, -1.658980e-002, -2.534808e-002, 6.822098e-004, -3.526252e-002, -2.030044e-002, -5.139871e-003, 1.457926e-002, 1.291982e-003, -3.651530e-003, 5.430070e-003, 4.128537e-002, -1.354872e-003, -4.243935e-002, 3.004384e-002, 7.954234e-003, 1.634260e-002, 2.427076e-002, 3.389862e-003, 4.037735e-002, 1.289242e-002, -2.351289e-002, 2.076041e-002, -8.618778e-003, 2.068004e-004, -2.484008e-002, -

© ISO/IEC 2004 — All rights reserved


Copyright International Organization for Standardization
Provided by IHS under license with ISO
No reproduction or networking permitted without license from IHS
Not for Resale

4.401263e-002, -3.225825e-002, 6.881172e-002, -7.740517e-002, 7.418951e-002, -1.682993e-002, 2.352157e-002, 4.405570e-002, -1.254924e-002, -3.598645e-002, -3.882646e-002, -9.079201e-002, 1.279175e-002, -5.287110e-002, -5.256435e-002, -4.737790e-002, -1.901598e-002, -4.160600e-003, -1.601506e-002, 1.317813e-002, 2.252021e-002, -2.480205e-002, 3.033808e-002, 6.264567e-002, 1.923619e-002, -7.394760e-003, -4.175313e-002, 1.471937e-001, 3.684246e-002, 5.642459e-002, -1.397676e-001, -9.556923e-002, 5.626630e-002, 5.617734e-002, -4.778798e-002, -1.094599e-001, 4.864509e-002, 2.913507e-002, -1.104165e-002, -4.811707e-002, -1.014076e-001, -4.113752e-002, -2.401782e-002, -4.574061e-004, 6.055160e-003, -6.766032e-003, -4.966467e-003, -1.384682e-003, -1.061015e-001, 7.594745e-002, -5.382649e-002, 4.476747e-002, -5.576501e-002, 2.419835e-002, 7.699808e-002, 2.079581e-002, -5.384119e-002, -2.765918e-002, 8.326961e-002, -1.659361e-002, -3.437236e-002, -4.251764e-002, 5.408170e-003, 7.292932e-002, 6.905586e-002, -2.163917e-002, -3.095390e-003, -2.663516e-002, -6.371382e-002, -3.850211e-002, -6.066825e-002, 2.053845e-002, 1.168970e-002, -4.455183e-002, -2.764814e-002, 9.994629e-002, -1.195947e-002, -1.293652e-001, -4.730205e-002, 1.237276e-002, -5.162807e-002, -6.853790e-002, 6.533847e-002, -2.876525e-003, 4.539987e-002, 3.600749e-002, 1.317671e-002, -7.998967e-003, -2.063017e-002, -2.362527e-002, 1.213884e-002, 2.854028e-003, -4.224794e-002, -1.346114e-002, -2.149956e-002, -5.667642e-002, 9.220668e-002, -4.621166e-002, 6.325109e-004, 4.393011e-002, -1.545260e-002, 2.721256e-002, -8.373058e-002, 2.991117e-003, 4.127196e-002, -2.655570e-002, 2.048180e-002, -6.274156e-003, -2.258470e-002, -2.742524e-002, -3.715960e-002, -2.305734e-002, -3.394606e-002, 2.062090e-002, 5.564929e-002, -6.864921e-003, -5.526529e-003, 1.560488e-002, -5.238589e-002, 8.707170e-003, -3.495613e-002, 1.168159e-002, 5.753482e-002, -1.160508e-001, 2.423098e-002, 4.273478e-002, 4.502047e-002, -1.576920e-002, 2.703760e-002, -2.323250e-002, -1.783213e-002, -1.532282e-002, 1.678911e-002, 3.140214e-002, 3.043964e-003, -3.418309e-002, -2.323761e-002, 5.097837e-002, 4.177729e-002, -7.686304e-002, -9.698451e-003, 3.300843e-002, -6.671795e-002, 3.263167e-004, -5.974254e-002, 2.813745e-002, 1.000694e-002, 1.524417e-002, 3.509672e-002, 9.214371e-003, 2.731588e-002, 3.885138e-002, -1.288175e-002, -6.306296e-002, 7.594834e-004, 7.096629e-004, -4.343941e-003, 2.593879e-002, 9.214409e-003, -1.950056e-002, -2.321941e-002, 7.141293e-004, -4.853690e-002, -4.388691e-002, -2.010176e-002, 4.122420e-002, -7.502652e-003, -3.690761e-002, 4.167646e-002, 5.705386e-003, -2.209232e-002, -8.584779e-003, -3.624744e-002, 5.717578e-002, -8.932046e-003, -3.677469e-002, 1.074063e-002, 2.194287e-003, 3.970929e-003, -1.177176e-003, 2.052261e-002, 4.159810e-002, -1.078883e-002, -1.906364e-002, -3.281834e-002, -1.235532e-002, -5.934652e-004, -2.807927e-002, 2.107256e-002, -2.021083e-002, -5.079269e-002, -4.426691e-002, 5.300867e-002, -7.913070e-003, -1.284343e-002, 2.965268e-002, -2.276854e-002, -1.075066e-002, -1.295706e-002, -2.245071e-003, 1.625274e-002, 2.785092e-003, 5.176684e-003, 2.219270e-002, 3.443620e-003, -1.407991e-003, -4.512472e-002, 1.107263e-002, -6.084665e-003, -1.656245e-002, 7.901309e-002, -5.466525e-002, -6.848786e-002, 4.805643e-002, 3.477870e-002, 5.520305e-003, 1.150965e-003, 1.502279e-002, -2.879434e-002, -6.039187e-003, 3.115959e-004, -1.124256e-002, 3.518871e-003, 8.427419e-003, 2.882580e-003, 9.305144e-003, 8.171314e-003, 3.236121e-002, -5.059423e-003, -3.315244e-002, -2.501503e-002, 1.619190e-002, 1.903561e-002, -2.237684e-002, 3.693858e-002, -1.573815e-002, -5.111569e-002, 2.631093e-002, 1.967932e-003, 7.813348e-004, 7.814234e-003, -1.631791e-002, -8.600592e-003, -2.028614e-002, -9.575904e-003, 1.706233e-002, 5.240276e-003, 8.402857e-003, 2.941340e-004, -9.747853e-004, 1.067496e-002, 1.169182e-002, -1.030636e-002, -2.720358e-002, 7.141080e-003, 2.344677e-002, -1.964062e-002, 4.776412e-003, -8.348300e-003, -5.171290e-002},
{2.441513e-003, 9.761385e-003, -1.525361e-002, 2.542425e-002, -2.539428e-004, 2.869558e-003, -2.048913e-002, 7.623919e-002, -4.406000e-003, -4.921608e-002, 4.826985e-002, 3.042687e-002, 3.042687e-002, 4.826985e-002, -4.921608e-002, -4.406000e-003, 7.623919e-002, -2.048913e-002, 2.869558e-003, -2.539428e-004, 2.542425e-002, -1.525361e-002, 9.761385e-003, -9.767727e-003, -2.315733e-002, 2.478693e-002, 5.300155e-002, 4.143708e-002, 5.502596e-002, -7.990968e-003, 1.929556e-003, -4.486611e-002, 3.522800e-003, -1.572367e-002, 1.756613e-002, -8.582390e-003, 2.899064e-002, 7.051680e-002, -4.743009e-002, -4.327543e-002, 9.601346e-002, 2.355748e-002, -2.540650e-002, 1.729577e-002, 5.308610e-003, 3.035618e-002, -4.824086e-002, 8.682318e-003, -2.206066e-002, 5.231869e-002, -1.661327e-002, 5.930922e-002, 4.156128e-003, -7.296386e-002, 1.964509e-002, -1.808209e-002, -2.063050e-002, -3.621607e-002, -3.325180e-002, -6.441362e-002, -3.311108e-002, 3.274309e-002, 2.765175e-002, 2.844075e-002, 1.151012e-001, -1.963166e-003, 4.869453e-002, 7.857353e-003, 1.277350e-002, -2.208194e-002, -2.208511e-003, -3.780822e-002, 9.820672e-003, 7.629818e-002, -8.437708e-003, -3.033821e-002, -2.831438e-002, 3.996604e-003, -8.731328e-003, -6.495695e-002, -1.224891e-003, 1.872535e-002, -1.322178e-003, -3.822560e-002, -2.671540e-002, -2.728909e-002, 3.251611e-003, -4.879766e-002, 4.073885e-002, -5.469156e-002, -1.060936e-001, -1.055024e-001, 5.480538e-002, -9.868096e-002, -4.144497e-002, -4.076658e-002, 6.386540e-002, 2.213046e-002, -2.958551e-002, -2.377005e-002, 2.840701e-003, -6.263583e-002, -4.614053e-002, -9.772689e-003, 9.151502e-003, 8.049307e-003, -7.451534e-003, 1.055861e-002, 5.965499e-002, -2.261220e-002, -2.139637e-002, 6.921103e-002, -1.235174e-001, 5.526111e-002, 5.936890e-002, 7.412363e-003, -2.676153e-002, -6.022562e-002, 6.535111e-002, -5.949946e-002,


© ISO/IEC 2004 — All rights reserved

Copyright International Organization for Standardization
Provided by IHS under license with ISO
No reproduction or networking permitted without license from IHS
Not for Resale

4.332436e-002, -3.106026e-002, 4.582965e-003, 3.321396e-002, 1.110259e-002, 2.924462e-002, 2.707163e-002, 2.779675e-003, -1.231118e-002, -5.940372e-002, -1.017159e-001, -7.324130e-002, 1.366080e-002, 5.018528e-002, -8.470966e-003, -2.636853e-002, -4.939223e-003, 5.758773e-002, -5.408587e-002, 9.459049e-002, -1.001407e-001, -6.037321e-004, 3.813679e-002, 7.651308e-002, -3.490734e-002, -2.434919e-002, -1.864214e-002, -2.859722e-002, -3.291452e-002, -2.848375e-002, -7.533862e-003, 5.422493e-002, 6.795764e-002, 2.260019e-002, -1.656636e-002, -2.478456e-002, 3.945062e-002, 7.419072e-003, 4.865746e-002, -9.237446e-002, -8.046655e-002, -5.052321e-002, 1.841554e-002, 1.780701e-002, -1.034173e-001, 5.006897e-002, -4.519220e-002, -3.545356e-002, 2.496762e-002, 4.341517e-002, 9.614006e-003, -2.065490e-002, 5.498736e-003, 1.213648e-002, -7.910010e-003, 1.316680e-002, -9.950839e-004, 4.317093e-003, 4.903950e-002, -1.597712e-002, 1.855544e-002, -9.038962e-002, 9.886045e-002, 2.071860e-002, 4.378908e-003, -8.600135e-002, 7.877331e-002, -5.551781e-002, 3.495008e-002, 1.876263e-002, -2.683298e-002, 6.009459e-002, 1.828324e-002, -6.149737e-002, -1.205095e-002, 1.121436e-003, -5.187642e-003, 2.032051e-002, 1.193272e-002, -1.238501e-002, -1.156500e-002, 6.848761e-003, 6.075700e-002, -2.616132e-002, -7.864587e-002, -7.891181e-003, 3.911812e-002, 1.127301e-001, -5.895074e-002, 2.248745e-002, -4.243006e-003, 2.453864e-002, -1.549960e-002, 1.014226e-002, 2.024214e-002, -3.062820e-002, -2.105670e-002, -2.176441e-003, 4.085261e-002, 2.046176e-002, 7.600716e-003, 2.240496e-002, 1.058185e-002, -2.858111e-002, -1.171362e-002, -1.923253e-002, -3.515904e-002, 1.491127e-002, -7.460799e-003, -4.626255e-002, -3.909084e-002, -5.978717e-003, -6.407328e-003, -4.661198e-002, 4.980062e-002, -2.095492e-002, -3.848838e-002, 1.248218e-002, -2.940803e-002, -1.454332e-002, 5.847863e-002, 1.471622e-002, -1.565439e-002, 9.005232e-003, 3.626442e-003, -1.040441e-002, 1.596659e-002, -2.837898e-004, -1.642088e-002, 6.034694e-003, -1.149000e-002, 3.250114e-002, 1.126319e-002, -8.609851e-002, 4.484615e-002, -5.989366e-002, 2.648525e-002, 4.418513e-002, -5.334791e-002, 1.743551e-002, -5.213346e-003, -4.466834e-002, 6.197151e-003, 1.571295e-002, 8.421228e-003, -3.667534e-003, 1.288959e-003, 1.112189e-002, -7.069805e-003, -9.613463e-003, 1.640648e-002, -3.483269e-003, 2.177375e-002, 3.835680e-002, -4.688207e-002, 8.016702e-002, -2.683340e-002, -8.509675e-003, 1.100024e-002, -2.352231e-002, 1.705775e-002, 1.530257e-003, -2.346900e-002, -1.804117e-002, -1.774216e-002, 1.036568e-002, 2.526386e-002, -9.149697e-003, -1.403838e-002, -2.517200e-003, 1.183267e-002, 1.174828e-002, 7.670916e-003, -1.364408e-003, 2.562422e-002, 4.344818e-003, -7.357744e-003, 1.174408e-002, 1.399578e-002, 3.031104e-002, -2.010303e-002, -5.428336e-002, 6.293467e-002, 1.462261e-002, -1.726664e-002, 1.588731e-002, -1.973718e-002, -1.176125e-002, 6.670588e-003, 1.655312e-003, 2.421149e-003, 1.408883e-003, -7.446495e-003, 1.285783e-002, 5.094935e-003, -9.673364e-003, 2.083809e-002, -6.533347e-003, -5.450464e-003, 4.607875e-002, -1.682477e-002, -3.496358e-002, -4.089517e-017, 5.817817e-003, -1.525128e-002, 1.866020e-002, 7.929405e-003, -2.565842e-002, 1.044571e-002, -6.683577e-003, 1.139590e-002, 2.963082e-002, 1.263225e-002, -2.166638e-003, 2.166638e-003, -1.263225e-002, -2.963082e-002, -1.139590e-002, 6.683577e-003, -1.044571e-002, 2.565842e-002, -7.929405e-003, -1.866020e-002, 1.525128e-002, -5.817817e-003, 5.653678e-003, 1.855097e-002, -5.777548e-002, 5.190487e-002, 1.550928e-002, -6.460119e-002, 4.477593e-002, -4.699499e-002, -7.852442e-002, 4.614153e-003, 3.966619e-002, -1.072891e-002, -6.796891e-003, 3.264670e-003, -4.287336e-002, -8.659720e-003, -2.844089e-003, 8.207316e-002, -7.984581e-002, 1.599393e-002, 2.519594e-002, -3.081655e-002, -5.550786e-002, -2.713698e-002, 3.125957e-002, -1.616112e-002, -1.063313e-002, 1.035826e-002, 4.848334e-002, -1.164830e-001, -4.634423e-002, -2.977514e-002, -3.719995e-002, -2.242612e-002, -3.377717e-002, -1.826227e-002, -4.681806e-002, -4.103200e-002, -8.377427e-002, 3.891695e-002, -1.799912e-002, 5.397805e-002, -3.258313e-002, -7.074454e-002, -7.050228e-002, -1.023449e-002, -6.551761e-002, -4.325675e-002, 3.285592e-003, -4.478482e-003, 7.665599e-002, -1.296509e-001, 1.066666e-001, 1.181973e-002, 2.183552e-002, 1.392753e-002, -4.599463e-002, -2.300941e-002, -1.996440e-003, 1.400172e-002, 5.432033e-002, 7.749433e-002, -4.037967e-002, 2.708569e-002, -1.080956e-001, -4.669503e-002, -1.334991e-002, -7.290623e-003, 1.166247e-001, 8.297239e-002, 8.083501e-002, -7.579852e-002, -4.643336e-004, 2.149099e-002, 8.695116e-003, -9.648029e-003, 5.800772e-002, -1.045852e-002, -3.176883e-002, -9.439630e-003, -2.128133e-003, 3.489835e-002, -1.179387e-002, -5.195402e-002, -7.736699e-002, 1.270216e-002, -5.997362e-002, -1.876131e-002, 4.896511e-002, -1.011749e-001, -3.485847e-002, 6.526899e-003, -1.028514e-001, 7.686037e-002, 2.851905e-002, -1.105041e-002, -1.876509e-002, 5.053530e-002, 6.726204e-002, -3.639475e-002, 3.782795e-003, -4.119149e-003, -3.993102e-003, 3.593627e-002, 5.099861e-004, 3.746956e-003, -2.091651e-002, 4.503877e-003, -2.456324e-003, 4.537545e-002, 2.674686e-002, -9.281305e-003, 8.198956e-002, 1.062937e-001, -1.641085e-001, 8.337522e-002, 9.097222e-002, 2.700639e-002, -3.392902e-002, 2.898973e-002, 7.215502e-002, -1.714641e-002, 3.362263e-002, -3.730345e-004, -1.243490e-002, -2.561375e-002, -1.721542e-002, 4.474978e-005, 1.663028e-003, -1.179669e-002, -1.343749e-002, -3.152049e-002, -5.763377e-002, -1.347016e-002, -1.573750e-002, 6.733352e-003, 8.137469e-002, 3.340285e-002, 1.342012e-002, -1.705473e-001, 8.276467e-002, -1.105857e-002, 2.170424e-002, 2.256981e-002, -4.192558e-002, -3.473376e-002, -1.502044e-002, -5.315462e-002, 4.012897e-003, 4.995824e-002, -1.179135e-002, 1.777017e-002, 2.071793e-002, 8.215431e-003, -6.121187e-003, -2.335257e-002, 1.567676e-002, 1.090587e-003, -3.653449e-002,

© ISO/IEC 2004 — All rights reserved


Copyright International Organization for Standardization
Provided by IHS under license with ISO
No reproduction or networking permitted without license from IHS
Not for Resale

3.725582e-002, 2.052657e-002, -2.509282e-003, 7.678831e-002, 3.661614e-002, -8.032836e-002, 8.219878e-002, -5.128040e-002, 2.621706e-002, 1.920169e-002, -5.271372e-002, 2.825073e-005, 4.880132e-003, 1.109105e-002, -2.354755e-002, -2.870275e-002, 3.655423e-002, 4.369599e-003, 2.412335e-002, -1.787998e-002, 1.089978e-002, 5.323475e-002, -3.652310e-002, -5.431515e-002, 9.438217e-002, 8.357739e-002, -6.644079e-003, 7.312712e-003, 1.338481e-002, -2.928402e-002, 4.418110e-002, -2.959553e-002, -3.024230e-003, 2.399808e-002, -2.710186e-002, 2.937651e-002, 9.844106e-004, -2.589327e-003, 3.772978e-003, -3.358109e-002, 2.097726e-002, -7.072163e-003, -1.680891e-002, 1.593779e-002, -5.064921e-002, 5.090004e-002, -2.208185e-002, -5.469450e-002, 2.537203e-002, -2.175498e-003, 5.147871e-002, -4.229071e-002, 3.643801e-002, -2.987155e-002, 1.418815e-002, 6.160823e-003, -2.674914e-002, 3.879935e-002, 7.637043e-003, 1.278760e-002, 1.474108e-003, -9.452984e-003, 3.109129e-002, -1.327278e-002, 1.530199e-002, 1.747937e-002, -3.598215e-002, -6.163854e-003, -7.957099e-002, 4.042449e-002, -2.365338e-002, 2.445763e-002, 2.971067e-002, 4.731945e-003, -5.787731e-003, -5.918392e-003, -1.244343e-002, -1.868188e-003, 2.275317e-003, 8.653984e-003, 1.715556e-002, 2.123638e-002, -2.421388e-002, -1.501049e-002, -1.512323e-003, -1.929321e-002, -4.857655e-003, -1.029702e-002, -3.220896e-002, 1.071446e-002, -1.532471e-002, -1.404991e-002, 1.809334e-002, 6.778401e-003, 6.970391e-003, 1.256445e-002, -1.010713e-002, 4.435913e-003, 1.770058e-002, -1.735123e-002, -7.423553e-003, 2.740704e-003, 9.741497e-003, 2.334500e-002, -1.204371e-002, -7.874936e-003, 4.639292e-003, -8.412601e-003, -2.038495e-003, -9.285220e-003, 3.898432e-003, 9.381877e-003, -7.150285e-003, -1.694985e-002, 1.626650e-002, 2.217739e-002, -2.371985e-002, 3.115190e-002, -3.824658e-002, 1.995268e-002, 1.560331e-002, -2.510626e-003, -2.496087e-002, 6.415932e-003, -1.150929e-002, 4.313770e-003, 4.416774e-003, -1.235727e-002, -1.571615e-003, 1.260942e-003, -4.945342e-003, 2.861738e-003, -5.141775e-003, 7.704365e-003, 3.418833e-003, 1.185522e-003, 5.326020e-003, -2.255260e-002, 2.445077e-002, -1.791572e-002},

{-1.258026e-003, -3.246002e-003, 1.632215e-003, -4.516886e-003, -2.937271e-003, -1.304876e-002, -5.028154e-002, 2.745843e-002, -5.018565e-002, 1.340722e-002, 4.541519e-002, 5.215773e-003, 5.215773e-003, 4.541519e-002, 1.340722e-002, -5.018565e-002, 2.745843e-002, -5.028154e-002, -1.304876e-002, -2.937271e-003, -4.516886e-003, 1.632215e-003, -3.246002e-003, -1.279814e-003, -3.531336e-002, -4.230523e-003, 2.561630e-002, 5.722574e-002, -3.938633e-002, -6.378963e-002, 3.501198e-002, -2.567709e-002, -1.018673e-001, -6.317583e-002, -1.572487e-002, -1.077129e-003, 4.740282e-003, 8.631481e-003, -5.707783e-002, -7.366821e-003, -1.846034e-002, 7.487656e-002, -1.706101e-002, -4.715195e-002, -3.171842e-002, 3.139948e-002, 4.739172e-003, 3.434516e-003, -5.101975e-002, -5.601670e-002, 1.328613e-003, 3.665415e-002, 7.963711e-002, 7.851376e-003, 4.851149e-003, -1.657580e-002, -3.354457e-002, -1.297154e-002, 5.189248e-003, -2.826592e-002, -6.562277e-003, 4.197513e-002, -7.887243e-003, 9.132850e-002, -6.853759e-002, -3.892842e-002, -1.984474e-002, 7.978634e-002, 8.553612e-006, 4.958546e-002, -1.770045e-002, 2.723546e-002, 4.078171e-003, 3.362846e-002, -7.746967e-002, 1.928594e-002, -2.935222e-002, 1.109456e-002, 5.650252e-002, 3.355894e-002, -8.601797e-003, -3.131548e-002, 5.053636e-003, 4.220908e-002, -7.373431e-003, 1.790085e-003, -6.765058e-002, 1.644887e-002, -5.429599e-002, 4.622887e-002, -6.484551e-002, 2.501300e-002, -1.810152e-002, 3.850859e-002, 9.226931e-002, -1.656398e-002, 1.116239e-001, -1.242890e-002, -3.136333e-002, 3.328062e-002, 7.833297e-003, -2.280031e-002, -1.250241e-002, 1.209273e-002, 1.134238e-002, -8.237560e-003, 2.087719e-002, 5.242786e-002, -7.811591e-002, -8.866361e-002, 1.394059e-003, -2.376658e-002, 3.768220e-002, -1.206275e-001, -5.429945e-002, 3.082009e-002, 5.589826e-002, 2.235489e-003, -6.837008e-002, -1.252635e-001, 1.885022e-002, -8.971528e-003, -1.911129e-002, 2.221129e-002, -1.896184e-002, 2.881805e-002, 3.076475e-002, -4.568543e-004, -1.308548e-002, -5.197481e-003, 2.472749e-002, 3.702369e-002, 2.064203e-002, 7.248264e-002, -5.419827e-002, -2.085258e-002, 4.800424e-002, 1.116792e-001, 8.488695e-002, 8.624354e-003, -3.446096e-002, 2.106999e-002, 5.927130e-002, -6.882032e-002, 2.471158e-003, 4.121798e-002, 1.589671e-003, 3.660062e-002, 5.435401e-002, 5.441192e-002, 4.219974e-002, 1.754548e-002, -1.283200e-002, -6.609516e-002, -2.355994e-002, -9.564312e-003, -3.700773e-002, 3.924783e-003, 2.344756e-002, 4.550040e-004, -2.506782e-002, -5.815122e-002, -7.096544e-002, 6.792303e-002, 2.958172e-002, 7.803638e-002, 5.884316e-002, 2.969230e-002, 1.948812e-002, -3.112978e-002, 1.374968e-002, 3.512806e-002, -1.221883e-002, 1.440163e-002, 5.590521e-002, 2.368105e-002, -7.703588e-003, -3.623736e-002, -2.690885e-003, 5.215131e-002, 1.347019e-003, 2.974127e-002, 7.583497e-003, -1.722423e-002, 2.339803e-002, 5.866065e-002, -5.819574e-002, -8.378155e-003, -7.159935e-002, -6.523295e-003, 6.120472e-003, -8.190685e-003, 2.948586e-002, 3.867551e-002, 1.782825e-002, -1.221565e-002, -5.864661e-003, 2.409339e-002, 2.963880e-002, -6.677472e-003, 3.158412e-003, -2.894786e-002, -4.141520e-002, -3.438034e-002, 1.926375e-002, -2.094823e-003, 2.598248e-002, 6.827268e-003, -7.995109e-003, -3.261708e-002, -8.860115e-003, 3.719033e-002, -9.880408e-003, -6.095228e-003, -7.935963e-003, 2.165130e-002, 1.842878e-002, -1.470361e-002, -1.563442e-002, 1.090205e-002, 5.106204e-003, 1.817167e-002, 1.811988e-002, -1.028836e-002, 1.697670e-002, -8.458285e-003, -1.209274e-003, 1.388474e-002, 3.221588e-002, -8.781611e-003, 5.274809e-002, -7.641577e-002, 4.693680e-002, 6.291312e-002, -1.652832e-002, -2.506947e-002, 1.604188e-002, -1.602048e-002, -2.023250e-004, 3.077190e-002, -


© ISO/IEC 2004 — All rights reserved

Copyright International Organization for Standardization
Provided by IHS under license with ISO
No reproduction or networking permitted without license from IHS
Not for Resale

1.420126e-003, -1.629102e-002, -9.811055e-003, 8.132832e-003, 1.109357e-002, 2.478249e-003, -9.727705e-003, 1.787891e-002, 1.870098e-002, -3.425758e-002, -1.457100e-002, 3.737343e-002, -8.012452e-003, -1.724438e-002, 5.063138e-002, 1.816878e-002, 1.417797e-002, 4.167964e-003, 5.112982e-002, -3.411072e-002, -2.538469e-002, 2.549865e-002, 1.293474e-002, 6.637882e-003, -4.131029e-003, 6.619135e-004, -2.978946e-003, 1.711404e-003, 9.448668e-003, -4.738797e-003, 1.190097e-002, 1.653602e-002, -6.065005e-002, -2.655765e-002, 3.352872e-002, -1.204553e-002, 1.240566e-002, -9.947226e-003, 6.467038e-004, 2.020623e-002, 6.003799e-002, 1.487178e-002, -4.655788e-004, -1.875277e-002, 4.234591e-003, 1.398855e-002, 1.525035e-003, 4.027938e-003, 2.873974e-004, 8.021254e-003, 3.420669e-003, 1.369898e-002, -6.480274e-004, -2.626417e-003, 4.919811e-003, -3.157688e-002, -3.983626e-002, 1.969864e-002, -1.532024e-002, -5.623594e-002, -9.363378e-003, 3.826196e-002, -1.203483e-002, 2.486986e-002, 3.089286e-002, -6.692320e-003, 6.340073e-003, 8.494770e-004, 1.410287e-003, -1.840379e-003, 5.443703e-003, -5.122701e-003, 1.754409e-003, 8.907248e-003, 5.557657e-003, 1.672738e-004, -9.419141e-003, 8.118536e-003, -2.805005e-002, -5.659826e-002, 2.074765e-002, 2.920612e-002, 1.898928e-017, -1.144033e-003, 1.163964e-002, -3.618569e-002, 4.728077e-002, -2.152361e-002, 8.996626e-003, -1.541761e-002, -3.612371e-002, 1.506091e-002, -2.990324e-002, 3.599927e-002, -3.599927e-002, 2.990324e-002, -1.506091e-002, 3.612371e-002, 1.541761e-002, -8.996626e-003, 2.152361e-002, -4.728077e-002, 3.618569e-002, -1.163964e-002, 1.144033e-003, 1.779658e-002, -2.778829e-003, 1.602048e-002, -1.899952e-002, 6.202048e-003, -7.893392e-002, 4.488028e-002, 6.138797e-002, -2.169305e-002, 7.347463e-002, 1.599730e-001, 8.167004e-002, 7.505057e-002, 7.450343e-002, 9.799842e-002, -1.097249e-002, 4.293803e-002, -4.509852e-002, 7.673194e-004, 2.341046e-002, 1.903308e-002, -1.591573e-002, 4.141623e-002, 1.316653e-002, 3.474235e-002, -1.980159e-002, -6.420944e-002, 1.115260e-001, -1.043902e-003, -3.307272e-002, -6.324561e-002, 6.000211e-002, -4.173457e-002, -1.019864e-001, -9.117937e-002, -2.075674e-002, 1.583560e-002, -4.594840e-002, 1.772676e-002, -4.543752e-002, 2.913013e-002, 4.111918e-004, -7.770309e-002, 1.266441e-002, 6.030573e-002, -2.912585e-002, -4.214350e-002, -4.904393e-002, 7.313257e-002, -9.548952e-002, -7.186444e-002, -4.666878e-002, -1.774949e-002, -3.498677e-002, -1.062943e-001, -4.428854e-002, -3.050355e-002, 5.608828e-002, 2.150221e-002, -5.379578e-002, -9.580838e-004, -5.345798e-002, 2.422938e-002, -1.511086e-003, -7.787275e-002, -3.267657e-002, 1.424998e-001, -8.401739e-002, 5.720390e-002, 7.416785e-002, 4.350617e-002, 1.111891e-002, 8.950534e-002, 7.040937e-003, -7.117695e-003, 3.753908e-002, -2.499243e-002, 3.522947e-002, 6.886128e-002, 1.028492e-001, 1.343453e-002, -1.287455e-002, 4.341306e-002, 4.396326e-002, 6.860627e-002, 5.915031e-003, -6.953823e-002, -1.616058e-002, 9.669074e-002, -5.307393e-002, -5.327267e-002, -6.266778e-002, -6.085611e-002, -1.061043e-001, 3.712549e-002, 2.106251e-003, 1.092846e-002, -2.889789e-002, 5.826675e-002, 6.614465e-002, 5.802696e-002, 6.559387e-002, -2.291194e-002, -1.124161e-002, -9.676302e-003, -3.307333e-002, -8.681944e-003, 2.774313e-002, 4.405915e-002, 2.700250e-002, -1.251265e-002, 1.065113e-001, -6.957774e-003, 5.734509e-002, 2.573414e-002, 3.942263e-002, 1.656220e-002, 1.625793e-002, 9.006225e-002, -7.279495e-002, 5.365851e-003, -2.845063e-002, -1.746747e-002, 1.319823e-002, 3.579469e-003, -3.003258e-003, -2.317716e-002, 1.513764e-002, 1.285889e-002, 2.794080e-002, -3.074109e-002, -5.352974e-002, -6.911749e-002, -7.581320e-002, 4.186386e-002, -3.470113e-002, 5.020180e-002, 2.452725e-002, -9.228761e-002, 5.473607e-002, -4.202443e-002, 3.813037e-002, -8.029019e-002, 5.896299e-002, 7.438949e-002, -1.803047e-002, 3.968295e-002, 3.375632e-002, -2.773613e-002, -4.812600e-002, -2.263742e-002, 3.837333e-002, 4.779152e-002, 7.319831e-002, -8.387529e-003, 7.068683e-003, 1.006011e-002, 1.442079e-003, 1.051080e-001, -4.028464e-002, -3.410689e-002, 8.371411e-003, 3.519487e-002, 1.428830e-002, -6.551400e-002, 1.073008e-001, 2.427499e-002, -3.889922e-002, 3.340810e-003, -4.378927e-004, -3.428105e-002, -5.252220e-002, -2.506816e-002, -1.698280e-002, -3.128434e-002, 3.707936e-002, 2.859856e-002, 1.639491e-002, -8.667921e-003, -4.166852e-002, 2.307486e-002, 6.384899e-002, 2.483953e-002, -1.110205e-001, 3.344331e-002, -3.826333e-002, -1.844338e-002, 4.997278e-003, -3.971330e-002, 8.251172e-003, -7.693649e-003, 3.391356e-002, 2.976919e-002, -2.699395e-002, -2.430076e-002, 3.474733e-003, -2.912065e-002, -1.273593e-002, -6.376915e-003, 1.529359e-002, 3.870279e-002, -1.389269e-002, 9.939698e-003, -2.056461e-003, 3.644448e-003, 3.318990e-002, 8.506798e-003, 2.967811e-002, -3.374783e-003, -2.394456e-002, 9.420784e-003, -4.438141e-002, 3.809410e-003, 1.411907e-002, -8.061893e-003, 1.935036e-002, -2.581517e-002, -3.489125e-002, -1.074908e-002, -5.365849e-003, -2.152684e-002, -2.860881e-003, 4.895422e-003, -1.710189e-002, -6.391633e-003, 3.333474e-002, -2.711168e-002, 5.244767e-002, 5.687790e-002, -4.229596e-002, -4.709729e-002, 5.171499e-002, -2.579658e-002, -3.755714e-002, 7.659985e-002, -5.253123e-002, -4.081440e-002, 1.833332e-002, 7.262525e-003, -1.218356e-002, -2.154923e-002, -6.190770e-003, -7.199150e-003, -7.414723e-003, 2.569526e-003, 6.781613e-003, 3.417913e-004, 1.267377e-002, -1.881843e-002, 6.263077e-002, 2.018730e-002, 1.896485e-002, 3.049100e-002, -7.135041e-002, 4.254181e-002, 1.799987e-003, 3.857470e-002, -2.617347e-002, -1.340392e-002, -2.241396e-002, 1.052618e-002, 9.726286e-003, -5.196910e-003, -6.973579e-003, -3.716498e-003, -1.962777e-004, 5.613324e-004, -8.347779e-003, 6.525396e-003, 2.275746e-002, -5.101725e-003, 1.082922e-002, 1.657744e-002, -2.174758e-002, -1.619713e-002, 9.486424e-002, -1.428074e-002, 2.016012e-002, -5.452146e-005,

© ISO/IEC 2004 — All rights reserved


Copyright International Organization for Standardization
Provided by IHS under license with ISO
No reproduction or networking permitted without license from IHS
Not for Resale

2.098587e-002, 8.667157e-003, 4.671934e-003, -2.313272e-002, -1.180867e-002, 1.222727e-003, -7.513724e-003, -2.096923e-003, 3.421871e-003, 5.202223e-003, -2.045279e-002, -2.309616e-003, 1.602631e-002, 3.304527e-003, 9.567362e-003, 1.780490e-002, -1.478682e-002, 2.879419e-002, 4.060474e-003, -1.493909e-002},
{-1.308129e-003, -6.857156e-003, 5.792481e-003, 1.845633e-002, 7.244859e-003, -5.402411e-002, 2.153835e-002, -9.484505e-003, -4.692724e-002, 1.051034e-002, -1.216561e-002, 2.569597e-002, 2.569597e-002, -1.216561e-002, 1.051034e-002, -4.692724e-002, -9.484505e-003, 2.153835e-002, -5.402411e-002, 7.244859e-003, 1.845633e-002, 5.792481e-003, -6.857156e-003, 8.483634e-003, 3.665160e-002, -1.350815e-002, -4.111727e-002, 9.433353e-002, 4.993045e-002, -6.442900e-002, 5.991743e-003, 8.767856e-002, -2.612669e-002, -3.358227e-002, -7.739823e-002, 3.999342e-002, -1.436281e-002, -4.633320e-002, 2.370046e-002, 2.087718e-003, 2.873858e-002, 1.894678e-002, -9.489685e-003, 3.797128e-002, -2.105683e-002, 5.324261e-003, 1.603440e-002, -2.393103e-002, -1.079593e-002, 3.550652e-002, 1.140897e-001, -5.541648e-002, 4.666415e-002, 3.774551e-002, -6.989531e-002, 4.302262e-002, 3.835682e-002, 3.844515e-002, 3.217334e-002, 1.661979e-002, 7.099231e-003, -1.802867e-002, 6.595167e-002, 2.057884e-002, -1.527550e-002, -2.055196e-002, 2.802161e-002, 4.017367e-002, 2.524031e-002, 1.029808e-002, 2.642899e-002, 2.410824e-002, -1.128081e-001, 6.395982e-002, 4.258417e-002, 1.698460e-002, -4.109499e-002, -1.830334e-002, -2.287574e-002, 2.190394e-003, -5.355048e-002, -9.190621e-003, -5.033911e-003, 1.485267e-002, -1.139920e-002, 1.900042e-002, 4.696133e-002, -1.198168e-002, 7.271346e-002, 1.337645e-002, 1.791902e-002, 5.762773e-002, -1.231840e-001, -2.934665e-004, 2.580255e-002, 3.276269e-003, -2.237592e-002, -5.570533e-002, -2.756812e-002, -1.287721e-002, -1.351623e-002, -1.111559e-002, -3.157353e-002, 2.101371e-002, -1.220030e-002, -2.742695e-002, -3.047941e-002, 2.692378e-002, 6.451824e-002, 6.968183e-002, -9.959000e-002, -1.165088e-001, 1.334321e-002, -4.223634e-002, -9.854976e-003, -6.598977e-002, 6.734409e-003, -2.802352e-002, 1.199005e-001, 1.551854e-003, -1.036081e-002, -8.611717e-002, -3.885072e-002, -1.712595e-002, -3.830161e-003, 1.933115e-002, -3.960649e-003, 9.098675e-003, 8.567324e-003, 4.334736e-002, -2.066140e-002, -9.104773e-002, -1.142591e-002, 5.884786e-002, -1.918547e-002, 1.345254e-001, 3.849325e-003, -5.382683e-002, 1.237880e-001, -7.352148e-002, 9.143381e-002, -1.850611e-003, -2.762931e-002, -1.141936e-002, -5.317186e-002, -1.253586e-002, -3.666876e-003, -5.510271e-002, -1.837475e-002, -6.670299e-003, -2.846414e-003, 3.075312e-003, 1.913724e-002, 9.003391e-002, 1.956108e-002, 1.278941e-002, 8.198245e-002, -9.001143e-002, -6.361113e-002, 4.366832e-002, -9.758302e-002, -9.779056e-002, 3.572711e-002, -4.318167e-003, -9.606510e-002, 1.374399e-001, -7.377729e-002, -5.033467e-002, 5.187613e-002, -2.475470e-002, -3.979841e-002, -1.284134e-002, -4.106013e-003, 3.181019e-002, 2.171222e-002, -4.294509e-002, -3.864664e-002, 3.424395e-002, -1.491007e-002, -6.230148e-003, 8.558722e-002, 1.735403e-002, -1.106084e-002, -1.903586e-002, 7.552502e-003, -4.874596e-003, -1.838995e-002, 1.510764e-002, -1.116709e-001, 9.572610e-004, 5.200542e-002, 2.734298e-003, -1.467474e-002, -3.551055e-002, 5.499478e-003, 6.879201e-003, 2.138334e-002, 6.552892e-002, 1.054041e-002, -1.935954e-002, -2.163295e-002, -2.024688e-002, 2.668766e-002, -3.148275e-002, -9.801183e-003, 8.166045e-002, -4.190322e-002, -2.912974e-002, 7.142776e-002, -6.045345e-002, -3.904229e-002, 5.935149e-002, -6.968365e-002, 6.419053e-003, 1.210596e-002, -5.231994e-003, 2.055303e-002, 6.847078e-003, -2.277983e-002, 6.168484e-003, 3.397523e-002, 1.717927e-002, -5.458954e-003, -9.605380e-003, -2.102092e-002, -2.018834e-002, 6.250339e-002, 1.747276e-002, -3.624787e-002, 4.760878e-002, 4.802019e-002, -5.211342e-002, 7.033008e-003, -1.115437e-003, 7.142849e-003, -1.675580e-002, -3.752706e-003, 3.502620e-002, 8.172299e-003, 8.586782e-003, 2.200745e-004, 4.028545e-003, -8.244670e-003, 3.723099e-002, 4.418717e-002, -1.628718e-002, 2.384112e-003, -8.461287e-003, 1.197085e-002, -7.077142e-003, 1.752791e-002, 5.124123e-002, -7.907477e-002, -1.732985e-002, 1.015738e-002, -2.323194e-002, 1.573020e-002, -4.026592e-002, 1.551710e-002, 2.618140e-002, -2.321730e-002, 1.892561e-002, 2.275545e-002, 3.541511e-003, -8.669299e-003, -1.509261e-002, 2.656156e-003, 4.101886e-002, 1.461528e-002, -3.238907e-002, -1.680239e-002, -1.506494e-002, 4.259531e-003, -2.557256e-002, 6.327501e-003, 9.492825e-003, 3.245614e-002, 2.002525e-002, -6.606992e-002, -1.866552e-002, 4.269495e-002, -4.502419e-002, 5.567109e-003, 7.252252e-003, 1.163848e-002, 1.165449e-002, 7.833744e-003, 1.837117e-003, -1.094053e-002, 1.345000e-003, 1.103481e-002, 1.671957e-002, -7.387737e-003, -1.338866e-002, -2.900608e-002, 4.404075e-003, 4.228712e-002, -1.165040e-002, -3.550214e-002, -1.549988e-002, -2.105215e-002, 3.142931e-002, -2.354881e-002, -2.058083e-002, 3.766625e-003, -1.119518e-002, 1.834694e-002, 3.610942e-003, -2.906030e-003, 1.013836e-002, 1.097242e-002, -9.000655e-004, -5.646443e-003, 1.556859e-002, 2.175047e-004, -4.506877e-003, -1.765624e-002, 2.709624e-002, -1.529200e-002, -1.530018e-003, 1.332377e-002, -6.276813e-003, -5.857384e-017, 9.327403e-004, 1.738227e-003, -3.595498e-002, 4.150221e-002, -1.719565e-002, -1.821052e-002, -8.505425e-003, 2.670995e-002, 1.382116e-002, -2.841611e-002, 4.054239e-002, -4.054239e-002, 2.841611e-002, -1.382116e-002, -2.670995e-002, 8.505425e-003, 1.821052e-002, 1.719565e-002, -4.150221e-002, 3.595498e-002, -1.738227e-003, -9.327403e-004, -7.333602e-003, -1.973575e-003, 2.654955e-002, -1.002214e-001, 2.211267e-003, 5.696870e-002, -1.334813e-001, -6.153970e-002, 9.951800e-004, -5.072510e-002, -4.218053e-002, -2.449396e-002, 1.726642e-002, -3.507209e-002, -5.848685e-003, -


© ISO/IEC 2004 — All rights reserved

Copyright International Organization for Standardization
Provided by IHS under license with ISO
No reproduction or networking permitted without license from IHS
Not for Resale

4.875803e-002, 1.530733e-002, -6.254954e-002, 1.809569e-002, -7.669311e-003, 4.602113e-003, -1.508844e-002, 2.052121e-002, 1.675737e-002, 2.246183e-002, -3.473273e-002, 6.643679e-002, -1.058840e-001, 8.131249e-002, 2.127238e-002, -1.787132e-002, -2.712192e-003, -2.630327e-002, -1.066726e-002, 1.314599e-002, -2.250462e-002, 4.412266e-002, 2.976721e-002, 6.646060e-002, -4.938812e-002, 1.491181e-002, 1.046013e-001, -3.890980e-002, -8.003905e-002, 5.672089e-002, -5.714230e-002, -3.126063e-002, -2.639455e-002, 2.293436e-002, 3.905093e-002, -1.125231e-001, -1.437432e-002, 7.235916e-002, 5.568223e-002, 1.458228e-002, 6.868347e-002, 1.214393e-002, -3.046142e-002, 4.591431e-002, -1.206529e-002, -4.667874e-002, -5.929431e-002, -1.764732e-002, -6.209621e-004, -3.852376e-002, -1.573494e-001, 9.326823e-002, -2.831627e-002, -1.892520e-002, -4.112048e-002, 3.151320e-002, 1.014241e-001, -4.875366e-004, 6.089292e-002, -5.135543e-003, 1.689589e-002, 3.325963e-002, 7.702696e-002, 4.115557e-002, -1.707690e-003, -5.192088e-002, -2.424012e-002, -1.449461e-003, 7.793688e-003, -1.931669e-002, 9.374899e-003, 4.739907e-002, 1.830365e-002, 5.041867e-002, 4.189441e-002, -5.138420e-002, -7.128148e-002, -2.938706e-002, 1.158873e-002, -8.306514e-002, -2.369666e-002, -1.610347e-002, 6.244476e-002, 2.037439e-003, -3.172222e-002, -3.521272e-002, -1.312257e-002, -3.264442e-002, 2.876994e-002, -4.674435e-002, -4.652313e-002, -2.071520e-002, 3.529911e-002, -2.843621e-002, -6.208789e-002, 4.369479e-002, -2.278971e-002, -3.268537e-002, -5.003801e-003, -1.724180e-002, 9.835662e-002, 5.501941e-002, -4.591905e-002, 6.304634e-002, 4.530177e-002, -1.050836e-001, -2.693729e-002, 5.792440e-005, 2.956806e-002, -1.399028e-002, 8.223720e-004, -2.021470e-003, 1.598638e-002, -5.316907e-002, -1.155051e-002, 2.133809e-002, 6.189740e-002, -1.583767e-002, -6.524867e-002, 5.356504e-002, -2.123506e-002, 2.117829e-002, -5.892086e-002, -7.320940e-002, 3.585231e-002, -2.970365e-002, 1.035054e-001, -1.127859e-001, 7.574880e-003, -5.660833e-003, 4.902809e-003, -6.116348e-002, -4.072984e-002, 1.083583e-002, 1.744833e-002, 3.245780e-003, 2.443381e-002, -1.303351e-002, -9.900404e-003, 1.432339e-002, 7.492469e-002, 3.733329e-002, -4.674868e-002, 7.004555e-002, -8.771550e-002, -1.866132e-002, -1.724776e-002, -4.031341e-002, 3.730784e-002, -2.317367e-002, -3.565910e-002, 3.116229e-002, 4.023981e-003, -3.531404e-002, -2.168007e-002, 2.388824e-003, 3.216010e-002, 1.623738e-002, -1.615811e-003, 1.621126e-002, 3.393549e-002, 6.483081e-003, -3.101744e-003, -1.407500e-002, 1.378276e-002, 3.825496e-002, -5.819262e-002, 6.181896e-003, 2.624155e-003, -6.158031e-003, 1.311080e-002, -1.401070e-002, -3.043001e-002, 4.076933e-002, -5.639774e-002, 1.190713e-002, 1.613282e-002, -8.133178e-003, -7.033625e-003, -2.000814e-002, -7.338791e-003, -9.127706e-003, -1.364969e-003, 3.265744e-002, 1.839219e-002, 9.027381e-003, 6.247737e-003, -5.072468e-002, 1.260438e-002, 4.564663e-002, 1.569607e-002, -1.634850e-002, -4.476483e-004, -5.340232e-002, 7.887739e-002, -1.451827e-002, -7.315321e-002, 4.575550e-002, 1.615071e-002, 2.083277e-002, 4.560055e-003, -2.408363e-002, -6.895157e-003, -1.459250e-002, -3.521100e-002, -1.466318e-002, 7.751155e-004, 2.475085e-002, 8.138525e-005, 1.182005e-002, 6.799787e-002, -6.782473e-002, 2.960140e-002, 1.447587e-002, 1.689401e-003, 5.785434e-002, -1.844651e-002, -5.105671e-002, -6.142407e-003, 6.549495e-002, -2.317718e-002, 1.834262e-002, 7.187968e-003, -3.488745e-003, -8.701765e-003, -9.556521e-003, -5.920539e-003, 8.659712e-003, -3.045124e-002, 7.199717e-003, 2.032451e-002, 2.060863e-002, 1.803768e-002, -4.132777e-002, 5.088735e-002, 8.638480e-003, 8.924365e-003, -5.794192e-002, -2.478004e-002, 3.780180e-003, -1.531353e-002, -1.413496e-002, 1.610165e-002, -5.126370e-003, 1.164571e-002, 4.269104e-002, -6.632626e-003, -1.174169e-002, -2.777042e-004, -5.463820e-003, -3.228943e-003, 4.972858e-004, -8.442875e-004, 1.095042e-002, 2.340449e-002, 1.492482e-002, -1.040070e-002, -1.807481e-002, -1.380533e-002, 2.600953e-002, 9.391873e-003, 6.604917e-003, -4.114463e-002, -6.140001e-005, -4.905576e-003, -1.954340e-002, 1.745551e-002, 2.623565e-002, -9.450539e-003, -6.101879e-003, 1.651920e-003, 9.747264e-003, -5.473524e-003, 8.469458e-003, -1.101331e-002, -1.465140e-002, 1.574879e-002, -3.276159e-003, 2.623055e-003, 6.585078e-003, -1.524131e-002, 2.221833e-002, 1.170931e-002, 8.247009e-004},

{3.120386e-003, -3.066481e-003, 2.357403e-002, -2.005491e-002, -3.452870e-002, 3.739907e-002, 1.555320e-002, -4.374793e-002, -2.214453e-002, 6.853216e-002, -5.351830e-002, -3.550230e-002, -3.550230e-002, -5.351830e-002, 6.853216e-002, -2.214453e-002, -4.374793e-002, 1.555320e-002, 3.739907e-002, -3.452870e-002, -2.005491e-002, 2.357403e-002, -3.066481e-003, -6.670051e-003, 2.137234e-002, 5.836340e-002, 4.982851e-004, -8.107572e-002, -2.900844e-002, -9.491995e-003, -5.462481e-002, 3.654733e-002, -8.870059e-002, 2.106590e-002, 2.949193e-002, 1.561808e-002, 2.175448e-003, -1.125012e-001, -5.677864e-002, 2.555257e-002, 9.982244e-002, -5.780656e-002, -4.234581e-002, 4.448543e-002, 9.079259e-003, -1.097020e-002, -2.649515e-002, -8.569302e-002, 5.490021e-002, 4.479708e-002, 1.063494e-001, -1.919220e-002, -1.227852e-001, -1.079005e-002, -4.136412e-002, 1.983518e-002, -7.599376e-002, -3.482178e-002, -3.785045e-002, -4.375687e-002, -1.677315e-002, 1.560810e-002, -6.915762e-004, -1.609222e-002, 4.169238e-002, -5.455209e-004, -3.808050e-002, 2.493664e-002, 3.854633e-003, 3.594229e-002, -2.046241e-002, -1.511245e-002, 3.928705e-002, 6.709504e-002, 6.639873e-002, 1.681433e-002, -7.891942e-002, -6.282008e-002, -8.783747e-002, 4.078009e-002, 4.558783e-002, 2.333122e-002, 1.582027e-002, -3.234061e-002, -4.329704e-002, -5.053122e-004, -3.016375e-002, 7.645642e-002, 1.834322e-003, -1.073358e-002, -2.918865e-003, 7.754285e-003, -5.593356e-002, -7.038597e-002, -7.785608e-002, -7.672890e-002, -

© ISO/IEC 2004 — All rights reserved


Copyright International Organization for Standardization
Provided by IHS under license with ISO
No reproduction or networking permitted without license from IHS
Not for Resale

2.478843e-002, -5.727152e-002, 9.817727e-003, 6.166349e-002, 2.571595e-002, 9.268596e-002, 1.970950e-002, -1.989638e-002, 4.164865e-003, 2.848930e-002, -3.899578e-003, -2.168240e-002, -3.496871e-002, -2.617236e-003, -1.208083e-001, 4.298417e-003, -2.531427e-002, 8.526890e-002, 1.399916e-002, 2.036290e-002, 3.478989e-002, 3.370364e-002, 5.637604e-002, 2.385315e-002, -1.573196e-002, 1.514838e-002, 8.205877e-004, -2.899192e-002, -4.458642e-002, -4.425096e-002, -2.764630e-002, 1.478568e-002, 5.623178e-002, 5.059031e-002, -5.312456e-002, -3.297704e-002, -1.743219e-003, 4.498250e-002, 5.089409e-003, -2.797796e-003, -4.340276e-002, -8.123744e-002, -8.179810e-003, -7.462516e-002, -3.559470e-002, 5.424770e-002, 2.495382e-002, 3.361956e-003, -9.657716e-003, -4.718041e-002, -3.998248e-002, -1.820049e-002, 1.810195e-002, 2.362147e-002, -2.349036e-002, -1.269071e-002, 1.262201e-002, 3.293135e-002, 2.280633e-004, 1.941166e-002, 3.299968e-002, 2.049975e-002, 7.525138e-002, -7.082940e-002, 4.668060e-002, 1.172278e-001, -6.178052e-002, 1.825928e-002, -3.445310e-002, -2.814029e-002, 1.254564e-002, 6.762078e-004, -2.116487e-002, -1.095803e-002, 2.577160e-002, 8.724850e-003, -2.179385e-002, -4.771906e-003, -6.325357e-003, -7.733011e-003, -8.656543e-003, -2.025888e-002, 1.491014e-003, 3.246847e-002, -2.784827e-003, -2.129582e-002, 1.975657e-002, 1.639055e-002, 4.591550e-002, 2.169754e-002, -2.005036e-002, -1.203386e-002, 1.753895e-002, -3.916647e-002, -3.458623e-002, -4.499481e-003, 3.426261e-003, -2.353464e-003, -2.650583e-003, 2.424391e-003, 2.300084e-002, -2.196512e-003, 1.728359e-002, 3.732443e-003, -2.059329e-002, -2.967685e-002, 1.717514e-002, 2.777934e-002, 2.096942e-002, 5.765600e-002, -1.125229e-001, 2.186071e-003, 1.522360e-002, -2.115034e-002, 3.344611e-002, -7.973014e-003, -1.891826e-002, 2.313777e-003, -1.317373e-002, 9.640781e-003, 1.200652e-002, -1.095451e-002, -2.147577e-002, -7.860178e-003, 1.550659e-002, 5.768602e-003, 2.343411e-002, -9.013621e-003, -2.680260e-002, 6.987407e-003, 2.665063e-002, 1.283896e-003, -2.565178e-003, -1.672277e-002, 2.148051e-002, -8.010315e-002, 7.430014e-002, 1.333307e-002, 7.877430e-003, 7.756885e-003, -8.293122e-003, -1.336744e-002, -3.676901e-003, -1.226590e-002, -9.392361e-003, 2.146149e-002, 7.799234e-003, -1.249643e-002, -7.898458e-004, 1.153818e-002, 1.682924e-002, -4.763564e-003, -2.825714e-003, 4.546241e-002, -9.270218e-003, 1.661327e-002, -6.792176e-002, -1.522910e-002, 2.893082e-002, -2.478628e-002, -5.112893e-003, 8.433420e-003, 1.269086e-002, 9.960422e-003, -3.298782e-002, -3.933577e-003, 3.684558e-003, 2.731421e-002, 1.020010e-002, -9.913438e-003, 1.490097e-003, -3.473474e-003, 3.467497e-003, 2.111239e-002, -1.248667e-002, 6.883565e-003, -2.003463e-002, -4.305859e-002, 2.950803e-002, -3.885733e-002, 1.692657e-002, -3.529431e-002, 1.343425e-002, -4.972184e-002, 3.893238e-002, 4.143911e-003, -1.087047e-002, -1.606251e-002, 3.053773e-003, 1.887830e-002, -5.159061e-003, -8.455720e-003, 6.642053e-003, -2.603193e-003, -8.223099e-004, 4.447755e-005, 5.568916e-003, 3.909257e-003, -2.260045e-002, 3.287704e-002, -1.770075e-002, -9.540516e-003, 3.413351e-003, 4.756697e-002, -3.104542e-002, -1.107179e-002, 1.359050e-002, -1.354725e-002, -1.473352e-003, -1.797951e-003, -7.890572e-004, 9.498074e-003, -6.383211e-003, -1.566758e-004, 1.026375e-003, 8.872805e-004, 1.304649e-003, -5.528021e-003, -4.708403e-003, 2.189682e-002, 2.783908e-004, -2.187476e-002, -1.187296e-002, 1.489622e-002, -1.415982e-002, 2.298982e-003, -3.393339e-017, 5.576281e-003, -2.455323e-003, 7.860318e-003, -1.122084e-002, 2.146252e-002, -1.207726e-002, -3.095114e-002, -2.845915e-002, 2.047049e-002, -1.655719e-002, -3.288612e-002, 3.288612e-002, 1.655719e-002, -2.047049e-002, 2.845915e-002, 3.095114e-002, 1.207726e-002, -2.146252e-002, 1.122084e-002, -7.860318e-003, 2.455323e-003, -5.576281e-003, 1.266641e-002, 8.578010e-003, -1.752808e-002, 7.221163e-002, 5.513269e-002, -3.855393e-003, -5.610552e-002, 2.149103e-003, -1.034013e-002, -3.855808e-002, 1.821353e-002, 6.863413e-002, 7.291310e-002, 1.497425e-002, -2.944174e-002, -1.920395e-002, 2.996581e-003, -2.148972e-002, 1.564952e-003, 7.911138e-002, -1.431331e-002, 2.295523e-002, -9.281300e-003, -6.337810e-002, 9.915998e-003, -4.533495e-002, -5.392138e-002, 6.321998e-003, 1.345970e-001, 9.162967e-002, 1.136107e-002, 3.597843e-002, 7.412696e-002, 8.762769e-002, 7.382687e-002, -1.190172e-001, -8.104535e-002, -6.137375e-004, 4.987041e-003, -4.340511e-002, 2.510541e-002, 6.206835e-002, 1.277743e-002, -1.211220e-002, 9.630807e-002, -4.137509e-002, 2.156459e-002, -3.741518e-003, -3.833706e-002, -8.996964e-002, 4.585698e-003, -1.630643e-002, -1.145111e-001, 8.909280e-002, 1.046558e-002, -1.041782e-002, 2.037480e-002, -1.889249e-003, 8.835071e-002, 4.958417e-002, -7.126572e-003, -1.305425e-002, 5.267001e-002, -2.992276e-002, 1.965307e-002, 6.747696e-002, -4.784722e-002, -1.870747e-002, 1.243541e-002, 6.741524e-002, 4.677893e-002, -4.989084e-002, -7.046367e-002, -6.521611e-002, -3.553129e-002, 1.004684e-001, -9.187211e-003, -5.470659e-003, 2.262736e-002, 1.682983e-003, -7.869767e-003, 6.584597e-003, 2.941963e-002, 5.452931e-002, 6.574366e-002, -3.043057e-002, 2.959294e-002, 1.386589e-002, -6.047393e-002, 7.435845e-002, 1.758387e-002, -7.376403e-002, -8.341606e-002, 3.366943e-002, -2.279997e-003, 6.868779e-002, -5.445843e-002, -7.980667e-002, -3.222188e-002, -5.336715e-002, -4.199074e-002, -1.639318e-002, -4.427917e-004, -2.189460e-002, -3.348319e-002, -2.489297e-002, 4.045561e-003, -3.255142e-002, -3.067865e-002, -3.976617e-002, -5.289010e-003, -2.432771e-002, 1.794453e-001, -4.858961e-002, -5.905333e-002, 8.664841e-002, 1.115105e-001, 2.775153e-002, -4.822273e-002, -1.007375e-001, 4.758241e-003, 2.092695e-002, -2.022411e-002, 2.256608e-002, 3.339187e-002, 9.349943e-003, 1.328605e-002, -1.214214e-002, 1.410519e-002, 6.000598e-003, 6.068198e-002, -5.673629e-003, -3.335683e-003, 2.305527e-002, -1.096139e-001, -


--`,,```,,,,````-`-`,,`,,`,`,,`---
© ISO/IEC 2004 — All rights reserved

Copyright International Organization for Standardization
Provided by IHS under license with ISO
No reproduction or networking permitted without license from IHS
Not for Resale

6.209880e-002, 1.768380e-003, 2.257369e-002, -3.410196e-003, 7.538104e-002, -1.912881e-001, -6.925858e-003, 3.586353e-002, 8.447328e-002, 3.127995e-002, 1.513717e-002, 2.387713e-002, -1.470167e-002, 5.311707e-003, -1.030341e-003, 5.625699e-003, -2.832276e-002, 2.571784e-003, -2.033734e-002, -9.968709e-004, -4.426885e-003, 5.001480e-002, 5.158370e-002, -3.910858e-002, -3.312022e-002, -1.075901e-001, 1.401695e-001, -3.110004e-003, -1.251366e-001, 4.182064e-002, -3.321183e-003, -1.561398e-002, 9.549582e-003, 4.012974e-003, -3.290277e-002, 9.353205e-003, 1.828054e-002, 5.966208e-003, -5.722509e-003, 6.735871e-003, -1.338450e-002, 5.262513e-002, -3.813247e-003, -5.142920e-002, -3.110017e-002, -1.488004e-002, 7.169769e-002, -2.465270e-002, -5.693522e-002, 4.625219e-002, -5.096829e-002, 1.348865e-002, 3.149754e-002, -8.522007e-002, 5.281398e-002, 5.735523e-004, -1.832788e-002, 7.558842e-004, 8.607796e-003, 9.180092e-003, -1.915970e-002, 1.340452e-002, -1.039935e-002, 3.500978e-003, 6.800561e-003, 3.825223e-002, -1.357215e-002, -2.422176e-002, -7.089673e-003, 5.737639e-002, 1.447174e-002, -4.261501e-002, -6.487531e-002, 6.840459e-002, -1.758674e-002, 2.660480e-002, 2.672303e-002, -7.722127e-003, 6.636668e-003, -1.862830e-002, 1.444452e-002, 1.578592e-002, 3.822849e-003, -7.696434e-003, 5.295332e-003, 1.261971e-002, -2.335662e-002, 3.471921e-003, 2.227334e-002, 8.190923e-003, 1.455043e-004, -5.890217e-003, 7.394922e-002, -3.088803e-004, -3.626844e-002, -2.967454e-002, 2.661823e-002, 1.742506e-002, 2.098338e-003, 3.968553e-003, 3.072640e-002, -3.147995e-002, -1.233970e-002, 3.421191e-004, 3.101884e-002, -9.741861e-003, -1.961455e-002, 1.921719e-003, 2.356839e-003, -9.463219e-004, -5.776152e-003, 8.565226e-003, 1.119824e-002, 2.225613e-002, -9.803444e-003, 1.549132e-002, -7.897925e-003, -2.614676e-002, 2.499418e-002, -6.856177e-002, 3.759422e-002, 3.636726e-002, -8.331084e-003, 1.869195e-002, -3.655222e-002, -4.999276e-003, 4.079699e-002, -1.882155e-002, -3.158195e-003, 6.319346e-003, 6.535054e-003, -2.721810e-003, -7.800266e-003, -9.671254e-003, 1.532102e-002, 7.499816e-003, 1.178189e-002, -2.208778e-003, 4.001616e-002, -2.500140e-002, -6.107877e-002, -1.111968e-002, 1.115733e-002, -8.234569e-003, 1.300295e-003, 1.931784e-002, -5.534847e-003, 1.435371e-002, 1.143010e-003, -8.267130e-003, 9.545776e-003, -5.823565e-003, -2.247558e-003, 2.482860e-003, 1.082899e-002, -1.715987e-003, -9.549000e-004, -3.293596e-003, 1.803940e-002, 6.921864e-004, -4.005493e-003, -1.589701e-002, 4.372643e-002, -4.725176e-002},

{9.658933e-005, 2.189596e-004, 3.203027e-003, -2.484266e-002, 2.863899e-003, 1.896236e-002, -2.660679e-002, -3.853845e-003, -4.074370e-002, 2.509594e-002, -8.773871e-003, -3.988145e-002, -3.988145e-002, -8.773871e-003, 2.509594e-002, -4.074370e-002, -3.853845e-003, -2.660679e-002, 1.896236e-002, 2.863899e-003, -2.484266e-002, 3.203027e-003, 2.189596e-004, 7.332848e-003, 2.932459e-003, 3.490180e-002, -3.692521e-002, -4.084541e-002, 9.471254e-002, -1.783993e-002, -8.430151e-003, -1.317070e-002, -7.760984e-002, 1.568486e-002, 2.994596e-002, 9.826291e-002, 7.046312e-002, -2.371827e-002, 4.840219e-003, -7.349426e-003, 4.991760e-002, -2.941761e-005, -1.711159e-002, 7.424749e-003, -1.540831e-004, 1.510793e-002, 1.194194e-002, 3.489272e-002, -3.862641e-003, 2.391798e-002, 7.264048e-002, -3.989211e-002, 6.131952e-003, 4.099597e-002, 1.708687e-002, -4.338200e-002, -8.545664e-002, -1.061722e-002, 4.326550e-002, 2.363903e-002, 8.345642e-003, 5.875534e-002, 1.288729e-001, -2.211677e-003, -5.319856e-002, 1.118386e-001, -9.192269e-002, 2.123430e-002, 2.902693e-002, -1.152501e-002, -1.093005e-001, -5.273428e-002, -4.732206e-002, -3.743702e-002, 7.703387e-002, -2.708486e-002, 5.908526e-002, 1.924630e-002, -4.194116e-002, -2.543454e-002, -5.718133e-003, -2.043563e-002, 1.543675e-002, 3.523158e-002, 2.142611e-002, -8.311544e-002, -3.232287e-002, -6.130887e-002, 9.276956e-003, -3.141913e-003, 1.038402e-002, -8.075840e-002, -4.213386e-002, 5.569452e-002, -3.115706e-002, 2.698381e-002, -3.282441e-002, -4.581767e-005, 2.117269e-003, -1.470425e-002, -4.745394e-002, -3.710530e-002, 1.410555e-002, -1.003074e-003, 2.195915e-002, 3.310384e-003, 6.488596e-003, 2.214101e-002, -1.900761e-002, -7.898269e-002, -1.692088e-002, 4.842355e-002, -8.700187e-002, -4.498171e-003, 3.296377e-002, 2.339470e-002, -5.064159e-002, -1.193946e-001, -9.859715e-002, -9.836191e-002, -2.044528e-002, 8.241511e-003, 3.312857e-003, -1.458377e-002, 2.515626e-002, -5.379243e-003, -3.703386e-002, -1.403137e-003, -1.250297e-004, 2.046295e-002, -1.350246e-002, -4.788753e-002, 6.973609e-003, 3.711551e-002, 7.697180e-003, 3.589294e-002, 5.658862e-003, 1.233832e-001, 5.917174e-002, -4.686205e-002, -5.787079e-003, -6.466726e-002, -5.296785e-002, 3.304617e-002, -1.377842e-002, 3.407811e-002, 5.596478e-002, 2.695283e-002, -2.383876e-004, -2.278035e-002, 8.032711e-003, 1.963351e-002, 5.571235e-003, 2.371381e-002, -1.219094e-002, -2.162762e-002, 2.367946e-002, -1.007629e-001, -8.875918e-003, -2.549452e-002, 1.639375e-002, -1.118797e-001, -1.270166e-002, 4.700912e-003, -4.161491e-002, 9.098631e-002, -5.290072e-002, 5.374366e-002, 5.224808e-002, 1.439719e-002, 1.324920e-002, -1.342322e-002, 1.461454e-002, -1.746422e-002, -7.269479e-004, 1.349213e-002, 1.428367e-002, 5.286030e-002, 2.662767e-002, -2.856936e-002, 2.893562e-002, -8.152755e-002, -4.294897e-003, 5.673117e-003, 3.880548e-004, 5.785099e-002, -8.651070e-002, -1.947980e-002, -2.582317e-002, 9.034076e-002, 7.052460e-002, 1.719289e-002, -6.277663e-003, -1.149677e-002, 2.907274e-002, 2.174282e-002, -5.576436e-004, 6.071191e-003, -1.408494e-002, -1.624818e-002, -1.633744e-002, 4.574114e-003, 2.673201e-002, -2.564784e-002, 4.291651e-002, -1.591024e-002, -5.519605e-002, 1.896263e-002, 1.316348e-001, -2.790296e-002, -2.835544e-003, -8.662308e-003, 1.016166e-002, 4.679667e-002, -6.674779e-003, -6.523309e-003,

© ISO/IEC 2004 — All rights reserved


Copyright International Organization for Standardization
Provided by IHS under license with ISO
No reproduction or networking permitted without license from IHS
Not for Resale

7.997706e-003, -7.815866e-003, -1.305663e-002, -9.576303e-003, 1.734092e-003, 1.093141e-002, 1.856530e-003, -2.371814e-002, -1.208128e-002, -4.731033e-002, 2.329732e-002, -4.192775e-002, 2.320126e-002, -1.761283e-002, 1.085668e-002, 8.096428e-002, 6.044861e-002, 5.699433e-002, -3.863741e-002, 2.289602e-002, 2.163410e-002, -2.936562e-003, -6.422879e-003, 1.276232e-003, 7.953221e-003, 4.852733e-003, -8.617785e-003, -4.276399e-003, 2.773954e-002, -3.166754e-003, -2.650118e-002, -2.843170e-002, -3.360047e-003, 3.600459e-003, -6.687683e-003, -6.427603e-003, -3.531138e-003, -2.950827e-002, 1.133639e-001, 2.172422e-002, 3.582056e-002, 1.752325e-002, 1.531172e-002, -2.779894e-002, -2.528347e-002, 2.523876e-002, 1.909738e-002, 4.449392e-003, -1.294822e-002, -9.907611e-003, -1.208463e-002, -4.900241e-003, 2.037279e-002, -1.685904e-002, -5.160697e-002, 7.960619e-003, 5.342971e-003, 3.893313e-002, -3.953192e-002, -1.933078e-002, 3.358814e-002, 1.657895e-002, 5.557186e-002, 2.837367e-002, 4.934636e-002, -1.365317e-002, -1.491002e-002, 6.391053e-003, 1.577693e-002, 1.440873e-002, -2.260786e-003, 7.983510e-003, -1.263055e-002, -1.185821e-002, 1.071214e-002, 2.082974e-003, -1.477061e-002, -5.694401e-003, -7.266657e-003, 9.245694e-003, -1.964930e-002, 2.267364e-002, -7.265997e-002, 3.322996e-002, -2.637566e-002, 4.773794e-002, 4.049253e-002, 2.673899e-003, 3.095609e-002, -1.885867e-002, -5.460925e-004, -1.808770e-003, -7.563465e-003, 7.156730e-003, 4.849012e-003, 6.702353e-003, -7.786950e-003, -1.565941e-002, 1.456986e-002, -4.581729e-003, -2.522036e-002, 6.522918e-003, 1.416835e-002, 8.653909e-003, -1.501606e-002, -5.857892e-002, -5.302440e-017, -7.444258e-003, 1.886462e-003, 1.006554e-002, -1.949824e-003, 1.090517e-002, -2.838702e-002, 1.448887e-002, -2.925946e-002, 9.970166e-003, -3.596367e-002, -6.053608e-003, 6.053608e-003, 3.596367e-002, -9.970166e-003, 2.925946e-002, -1.448887e-002, 2.838702e-002, -1.090517e-002, 1.949824e-003, -1.006554e-002, -1.886462e-003, 7.444258e-003, -3.580510e-003, 4.182716e-003, -4.693089e-002, 1.660147e-003, 1.887930e-002, -5.487474e-002, 6.455354e-002, 3.784370e-002, 3.158851e-002, 2.107368e-002, 7.963329e-002, 4.230466e-002, 2.865949e-002, -5.767423e-002, -7.732402e-002, -4.345393e-002, 6.101516e-002, -6.164013e-002, -8.315705e-002, 2.973924e-002, -4.131199e-002, 2.602917e-002, -1.761351e-002, -7.455081e-003, -3.657612e-002, -1.527056e-002, -1.833825e-002, -2.126158e-002, 6.840889e-002, -5.139578e-003, 4.225688e-002, -9.965216e-003, -3.133932e-002, -7.437527e-002, -3.574521e-002, -2.629076e-002, 2.111836e-002, 1.968761e-002, 1.334649e-002, 1.585961e-002, 2.963864e-002, -4.827036e-002, -1.084792e-002, -1.834097e-002, 4.382146e-002, 3.144231e-002, -2.121770e-002, 1.958853e-002, -1.001043e-001, 1.970147e-002, 4.602695e-002, 4.724147e-002, 3.614021e-002, 4.667424e-003, 2.218613e-003, -3.722022e-002, 8.713976e-003, 2.242008e-002, 1.615488e-002, 4.699134e-003, -3.000390e-002, 1.816217e-003, 4.507475e-002, -5.847783e-002, -9.471171e-002, -1.272119e-004, -2.330548e-002, -6.059263e-002, -9.721225e-002, 1.186468e-001, 3.255046e-002, 4.655690e-002, -5.615368e-002, -1.223303e-001, -1.823794e-001, -6.346478e-002, -6.010004e-002, -5.539128e-002, -7.657765e-002, -6.693643e-002, -9.092949e-003, -2.473392e-003, -5.626779e-002, -2.269179e-002, 2.682515e-002, 1.000211e-001, 3.192962e-002, -7.611851e-002, 6.306056e-003, 2.419066e-002, 4.653195e-002, 7.661560e-002, -7.063630e-002, 3.694762e-002, -2.368088e-002, -3.673749e-002, 7.227111e-002, 1.810162e-001, -4.058322e-003, -2.350695e-002, -3.530832e-002, -4.905598e-002, 1.813538e-002, 3.871998e-002, 6.714620e-003, 1.967884e-002, -9.442380e-003, 8.907261e-003, -4.522803e-002, -3.816344e-002, 6.767595e-002, -3.619910e-002, 5.705242e-003, -8.542116e-002, -1.002239e-001, 4.478980e-002, -7.851715e-002, 9.584671e-003, -4.433288e-002, -4.893584e-002, -7.253344e-002, -3.706614e-002, 5.554076e-002, 5.145620e-002, 1.016419e-002, 2.451100e-003, -1.256323e-002, -7.568451e-004, -3.641065e-002, -2.086311e-002, 2.714599e-002, 2.398935e-002, -6.068419e-002, -1.381032e-002, 1.980326e-002, 9.869757e-003, 8.011955e-002, 6.241636e-002, -6.534731e-002, 3.265687e-002, -1.983914e-002, 5.742902e-003, -3.112612e-002, 1.049563e-002, 2.769437e-002, 3.326392e-002, -3.540699e-003, -3.625616e-002, -1.368945e-002, -6.967292e-003, 1.348733e-002, -1.675387e-003, -1.198555e-002, -1.199295e-002, 1.080856e-002, 2.020902e-002, -4.408236e-003, -3.616501e-002, -1.387081e-002, -2.729721e-002, 9.277905e-002, -7.298718e-002, -2.335858e-002, -2.993777e-002, -7.385461e-002, 8.449228e-002, 2.937645e-002, -3.486078e-003, 1.255707e-002, -2.414572e-002, 1.582556e-004, 4.857973e-003, -2.606064e-003, 2.029366e-002, 1.717551e-002, -3.184101e-002, -1.449286e-002, 4.186078e-002, -1.043392e-002, 1.291103e-002, 3.090949e-002, -6.649698e-002, 3.986736e-002, 9.260215e-003, -3.166789e-002, -6.263920e-002, -1.246411e-003, -7.856713e-002, 4.030862e-003, 1.965439e-002, -2.473248e-003, -7.978751e-003, -1.276857e-002, -2.068045e-002, -1.152588e-002, -7.237921e-003, 1.422020e-002, 5.198262e-003, 2.400161e-004, -6.359403e-003, 1.035094e-003, 9.880092e-003, -3.257400e-004, -1.045582e-002, -2.210096e-002, 4.896966e-003, 6.300819e-002, 4.381856e-002, 3.350899e-002, -3.986314e-002, -3.664148e-002, -2.841662e-002, 3.290190e-002, 2.510458e-003, -8.200107e-003, -9.255217e-003, -8.601718e-003, -5.706315e-004, -1.677331e-003, 1.515094e-002, 5.581044e-005, -4.578593e-003, -5.745059e-003, 2.732366e-002, 2.608703e-005, -6.506088e-002, -7.775772e-003, -3.413596e-002, -1.487035e-002, -3.013926e-002, -4.871531e-002, 1.397614e-001, -5.192722e-002, -6.320164e-002, 3.339356e-002, -5.641754e-002, -1.483769e-002, 2.508015e-002, -1.426776e-003, -2.746842e-003, -1.130568e-002, -2.692775e-003, 5.492244e-003, 1.269149e-002, -3.491007e-003, -1.204273e-003, 1.852665e-002, -9.387743e-003, -4.545689e-002, -6.733073e-003, -3.460776e-002, 8.463275e-003, 5.652568e-002, 4.902540e-002, 1.984075e-002,


© ISO/IEC 2004 — All rights reserved

Copyright International Organization for Standardization
Provided by IHS under license with ISO
No reproduction or networking permitted without license from IHS
Not for Resale

3.198819e-002, 1.660425e-002, -6.235511e-002, -5.956703e-003, 4.991198e-004, 3.496636e-002, 1.140533e-002, -1.933740e-002, 2.707795e-003, 1.196775e-002, 6.901269e-003, 3.575334e-004, -2.450535e-003, 2.907821e-003, 8.450313e-004, 6.244698e-003, -1.730534e-002, -4.619253e-002, 3.197851e-002, -4.495953e-002, 3.455020e-002, 3.749602e-003, 6.812986e-002, 2.238759e-002, -1.791120e-003, -6.802147e-004, -2.133484e-002, 7.060106e-003, 2.146666e-003, -3.108682e-004, 1.408081e-002, 2.017688e-003, 8.665901e-004, -6.160675e-003, -5.621303e-003, -7.975166e-003, -1.160550e-002, 2.410326e-003, -1.329499e-002, -3.164659e-002, 5.164067e-003, -2.066293e-002, 6.685993e-003, 2.673581e-003},

{3.212551e-003, 5.973797e-004, 7.351431e-003, -2.729634e-003, -2.145232e-002, 1.135864e-002, 5.682983e-003, -2.568430e-002, 5.155097e-002, 2.410194e-003, -1.736505e-002, 3.488582e-003, 3.488582e-003, -1.736505e-002, 2.410194e-003, 5.155097e-002, -2.568430e-002, 5.682983e-003, 1.135864e-002, -2.145232e-002, -2.729634e-003, 7.351431e-003, 5.973797e-004, -1.160621e-003, 3.937214e-003, 5.628493e-004, 1.283340e-002, 6.270258e-002, -8.727990e-002, 2.983238e-002, 4.703237e-003, -6.376489e-003, -1.905704e-002, 1.632976e-002, -2.555068e-002, -3.787027e-002, -2.538929e-002, 3.618122e-002, -2.690618e-002, -1.486757e-002, -4.858923e-002, -9.802119e-002, 5.839220e-002, -4.376723e-003, -4.914852e-002, 4.034924e-002, 1.979080e-002, -2.236406e-002, -1.124242e-002, 2.215100e-002, 1.157187e-002, 1.075645e-002, -1.371277e-002, 3.547187e-002, -6.306339e-002, -1.839620e-002, -2.349294e-002, 4.221724e-002, 1.356559e-002, 6.886324e-002, -1.097529e-002, 4.151838e-002, -2.037397e-002, 2.068667e-002, -1.992137e-003, 1.068373e-002, -3.165251e-002, 5.161989e-002, 2.691689e-002, 2.866269e-002, -6.101903e-004, 2.433117e-002, -7.556019e-002, -3.008754e-002, 7.827022e-002, 1.005219e-002, -9.689075e-002, 7.264438e-003, -4.450990e-002, 4.286832e-002, 3.109224e-003, -3.601951e-003, -7.728469e-002, -4.220878e-002, -1.077109e-001, 5.543877e-002, -3.394818e-002, -2.198013e-002, 2.671535e-002, 4.480887e-002, -8.681098e-003, -1.797694e-003, -1.455008e-002, 5.830102e-003, -4.449700e-002, 4.999409e-003, 4.780106e-002, -7.097053e-002, 1.976327e-002, -1.919680e-002, -4.666214e-002, 6.127992e-002, -5.393430e-003, 2.031519e-002, 1.316060e-002, 3.585007e-002, 5.405848e-004, 4.875069e-002, -2.058590e-002, 4.873590e-002, 3.603899e-002, -1.123399e-001, 7.952572e-003, 1.739278e-002, -3.034506e-002, -1.035766e-002, 6.378741e-002, 4.332535e-002, -4.425403e-002, 1.927140e-002, 1.039241e-001, -1.384522e-002, 9.073821e-002, 9.529915e-002, 2.491431e-002, 4.556912e-002, -3.091132e-002, 2.483120e-002, -2.548692e-002, 1.056543e-002, 3.080498e-002, 1.973136e-002, -4.285976e-002, 2.424746e-002, 1.135163e-001, -3.794563e-002, -5.669418e-002, -7.044228e-002, -4.403505e-002, -1.061807e-001, 3.911417e-002, -5.161786e-002, -8.176943e-002, -1.594799e-002, 4.580416e-002, -1.954884e-002, -1.846783e-002, 5.012676e-002, -7.347292e-003, -2.723240e-003, -1.826079e-004, -1.193451e-002, -9.861588e-003, 2.957496e-002, 1.486653e-002, 1.098975e-003, 3.613102e-002, -2.842852e-002, 3.840836e-002, 5.955688e-002, 4.766764e-002, -1.035928e-001, 1.818094e-002, -6.694519e-002, 3.391791e-003, 7.798409e-002, 9.091557e-003, -4.007869e-002, -1.642477e-002, 3.422953e-002, 1.624247e-002, -6.031098e-003, -3.200390e-002, 2.088611e-003, 1.204861e-002, -4.511334e-003, 1.296867e-002, 5.488362e-003, 4.237083e-004, 8.866565e-003, 6.078360e-002, 7.834415e-002, -1.730223e-002, 8.809260e-002, 1.312192e-002, 7.897110e-003, 7.727230e-002, 2.359584e-002, -4.858823e-002, 9.402975e-003, -9.507069e-003, 2.059808e-002, -2.395639e-002, -6.386723e-003, -1.195912e-002, 1.168142e-002, 9.319895e-003, -4.743732e-003, -1.151856e-002, -2.741536e-002, -9.643195e-003, 1.681505e-002, 3.964763e-002, -3.488639e-002, 4.905832e-002, 1.149539e-001, 3.149328e-002, -2.673790e-002, 5.863893e-002, -2.737084e-002, 2.604921e-002, -1.326252e-002, 1.797340e-002, 2.271172e-002, -3.208772e-003, 8.551846e-003, -3.023034e-003, 2.722174e-002, 1.814824e-003, 1.156406e-003, -1.908574e-003, 1.163296e-002, 4.641008e-003, -1.438427e-002, -5.889055e-003, 3.358801e-002, -5.561683e-003, -4.243813e-002, 7.951726e-002, 3.662275e-002, -4.238131e-002, 4.973491e-002, -7.433414e-002, 8.153624e-003, 8.048095e-002, -2.230678e-002, 2.652527e-002, 5.807066e-003, -1.945827e-002, 1.344324e-002, 5.201295e-003, 3.645058e-002, -9.139167e-003, -4.515959e-003, -1.458811e-002, 9.619197e-004, -2.667375e-003, -1.758127e-002, -2.680841e-002, 8.996087e-002, -3.896136e-003, 5.641750e-003, 6.485971e-002, 2.927432e-002, -3.898748e-002, 3.144083e-002, 1.139582e-002, -4.943017e-002, 2.229579e-002, 5.402074e-003, -6.279938e-003, 2.883113e-003, 2.852244e-002, 2.392626e-002, -3.046158e-003, 1.746698e-002, -1.599506e-002, -1.760866e-002, -2.037716e-002, 1.994737e-003, -1.006926e-002, 6.920204e-003, -1.026447e-002, 2.381885e-002, 7.476116e-003, 1.383012e-003, 4.737551e-002, -4.629863e-002, -2.566219e-002, 1.546133e-002, -1.416463e-002, 9.378609e-003, -9.750886e-003, -1.804167e-002, 3.066530e-002, 2.498876e-002, 5.376107e-003, 2.207775e-003, -1.653547e-003, 1.249425e-002, -2.400714e-002, -1.364704e-002, 3.133036e-003, -1.475051e-002, 3.019066e-002, 1.988684e-002, 8.308292e-003, 4.665227e-002, -4.658694e-002, -1.511506e-002, -2.170648e-002, 1.373490e-002, -3.154513e-002, 4.776413e-002, -4.938338e-002, -1.476560e-002, 1.779650e-003, 5.710595e-003, 1.716208e-002, -1.137452e-002, 2.493227e-003, -2.344224e-003, -4.502519e-003, 5.846190e-004, -1.145671e-002, -2.261335e-003, 9.662457e-003, -2.783038e-002, 5.939209e-002, -8.293220e-003, -1.859504e-004, 2.342232e-002, -7.329217e-017, -8.674780e-003, 1.324761e-002, -7.941493e-003, 1.049316e-002, 1.896991e-003, -8.442229e-003, 4.090866e-003, 1.139475e-002, -1.354159e-004, -1.776169e-002, -8.253394e-003, 8.253394e-003, 1.776169e-002,

© ISO/IEC 2004 — All rights reserved


Copyright International Organization for Standardization
Provided by IHS under license with ISO
No reproduction or networking permitted without license from IHS
Not for Resale

1.354159e-004, -1.139475e-002, -4.090866e-003, 8.442229e-003, -1.896991e-003, -1.049316e-002, 7.941493e-003, -1.324761e-002, 8.674780e-003, -2.363541e-002, 2.363945e-002, -2.438789e-002, 3.636647e-002, -1.656737e-002, -6.057388e-002, 7.179346e-002, -1.042009e-002, -5.813837e-002, 8.468249e-004, 3.318403e-002, 6.350118e-002, 3.914118e-003, 1.704249e-003, 5.219099e-002, -2.971765e-003, -8.266259e-003, 3.531068e-003, -6.592675e-002, 2.502208e-002, 3.576672e-002, 3.151116e-002, 2.018966e-003, -2.904505e-003, -2.675348e-002, -1.074027e-002, 7.889937e-003, 1.383069e-002, -3.704942e-002, -2.698705e-002, -4.229945e-002, -1.748107e-003, 2.579448e-002, 4.998033e-002, -7.766390e-003, -4.092441e-002, 1.925095e-002, -1.174781e-003, -1.122907e-002, -3.019074e-002, -7.627176e-003, 9.238594e-002, 4.752198e-002, -8.522149e-002, 3.146719e-002, 4.176630e-002, -2.639616e-002, 6.916071e-002, 1.514773e-001, -1.107300e-001, 7.722535e-002, -3.222885e-002, -2.280838e-002, 2.981882e-002, -7.704225e-002, -3.606686e-002, -2.763032e-002, -2.134525e-002, -2.334300e-002, -3.972249e-002, 4.049955e-002, 4.889991e-003, 5.565788e-003, 9.338327e-002, -5.431447e-002, -6.792778e-002, 4.484649e-002, -9.590951e-002, -1.534099e-001, -3.324531e-002, -4.680826e-002, -4.555006e-002, 2.005644e-002, -1.318555e-001, -6.734235e-002, -3.567396e-002, -8.043400e-002, 1.271348e-002, -1.247187e-002, 3.109928e-003, 1.542392e-002, 2.207587e-002, 3.310334e-002, -4.319864e-003, 4.245700e-002, -1.702574e-002, -2.314965e-002, 2.087373e-002, -1.387902e-001, -5.126924e-003, -3.736834e-002, -7.815345e-002, 1.519036e-002, -7.360952e-002, -5.538340e-002, 1.265934e-001, -5.068865e-004, 5.014559e-002, 1.741216e-002, -4.316621e-002, -7.541986e-002, 1.467732e-002, 3.061603e-003, -1.257273e-003, -4.481479e-003, -4.329600e-003, 1.554433e-002, -2.503703e-002, -2.885678e-002, -3.174374e-002, -8.443775e-002, 6.820704e-002, 1.229117e-001, 4.930019e-002, 2.754328e-002, 2.171097e-002, -4.231536e-002, 3.220435e-002, -1.573938e-002, -1.109769e-002, 5.608825e-003, 7.591038e-003, 3.431217e-003, 6.988453e-002, 1.025481e-003, -2.871850e-002, -2.766651e-002, -2.918654e-002, -3.604255e-002, -2.123050e-002, 8.750939e-002, 9.110748e-002, -1.293052e-002, 2.304739e-002, -1.506045e-001, -8.604464e-002, -1.656722e-001, 1.206837e-001, -2.399765e-002, 5.836198e-002, -6.486997e-002, -4.073475e-002, -9.494078e-003, 5.678259e-003, -4.280740e-002, 1.702026e-002, 1.419676e-003, -1.663063e-002, -9.181619e-003, -2.436463e-002, 5.567539e-003, -4.732583e-002, -5.982742e-002, 3.025059e-003, 3.315266e-002, 2.067393e-002, 1.690651e-002, 2.445485e-002, 3.077643e-002, -7.551353e-002, 2.221452e-002, -4.411288e-002, 2.961826e-002, -7.573650e-003, -9.218172e-003, -6.494442e-002, -1.074441e-002, -1.350504e-002, -6.767922e-002, -1.275152e-002, 1.688181e-002, -6.011367e-003, -5.098136e-003, 2.266852e-002, 1.728910e-002, -5.576065e-003, -2.563182e-002, -1.167050e-002, -1.488099e-002, 7.115692e-003, 3.076131e-002, -7.427630e-002, 9.125320e-002, 1.993224e-002, 4.541779e-002, 6.623865e-002, -1.028577e-001, 2.515084e-002, 1.035952e-002, 4.679829e-003, -5.590917e-002, 3.515928e-004, 1.652509e-002, 2.009693e-002, 3.825904e-003, -2.260671e-002, 1.279170e-002, 1.764717e-002, -1.162332e-002, 1.968630e-002, 1.644121e-002, -4.824248e-002, 3.130696e-002, -3.041777e-002, 4.926752e-002, -8.213556e-002, 6.954442e-002, 2.949830e-002, -1.173020e-002, 3.254865e-002, -1.146305e-002, -2.622009e-003, -1.908395e-002, 9.189167e-003, -6.658308e-003, 1.446169e-002, 1.093789e-003, -1.285258e-003, 3.993023e-003, 6.423556e-003, -5.362950e-003, 4.547169e-003, -1.723716e-002, 1.701119e-002, 2.597131e-002, -6.134345e-002, 2.927919e-002, -4.529302e-002, 4.359755e-002, 4.008931e-002, 5.625117e-002, 2.733897e-003, 9.024107e-003, 1.215261e-002, -2.153377e-002, 1.528849e-002, 2.461375e-002, -2.479297e-003, 1.870954e-002, 1.654998e-002, -3.498963e-003, -1.113718e-002, 1.773404e-002, 2.260776e-002, -1.096056e-003, -1.538927e-002, 5.442364e-003, -7.586426e-003, -1.139732e-002, -3.708238e-002, -2.009212e-002, 2.928570e-002, -9.456799e-003, 1.121862e-002, 2.986084e-002, -3.221512e-002, 3.967987e-003, -1.322556e-002, 1.078726e-002, -8.163518e-003, 2.625859e-002, 2.585078e-002, -1.127755e-003, -1.481111e-002, 2.493412e-003, -5.657579e-003, -9.190316e-004, 2.836798e-003, -9.377538e-003, -9.468100e-003, -9.400218e-003, 1.042967e-002, -2.141233e-002, 2.323391e-002, -5.256800e-002, 8.590409e-002, 7.208015e-002, -3.283161e-002, 2.897315e-002, -3.553042e-002, -2.119550e-002, -5.113092e-003, 1.448588e-002, 1.293041e-002, 1.786861e-002, 1.896623e-003, 1.235974e-002, 2.362876e-003, 8.812456e-003, 2.918681e-003, -9.381177e-003, -1.299996e-002, -1.695185e-002, 1.334540e-002, -2.816849e-002, 4.173020e-003, 2.629127e-003, 2.028165e-002, -7.231218e-003},

{2.650434e-003, 1.494729e-003, 4.226339e-004, -1.064077e-002, -1.397419e-002, 3.868848e-002, 1.086615e-002, -1.236484e-002, 6.449978e-002, -2.795159e-002, -3.738319e-003, 1.231028e-002, 1.231028e-002, -3.738319e-003, -2.795159e-002, 6.449978e-002, -1.236484e-002, 1.086615e-002, 3.868848e-002, -1.397419e-002, -1.064077e-002, 4.226339e-004, 1.494729e-003, -3.754211e-003, 4.349664e-002, 6.191822e-002, -5.631137e-002, -3.254471e-002, 3.421282e-002, -1.834186e-002, -4.123630e-002, -8.735143e-003, 6.946657e-002, -8.718158e-003, -6.804536e-002, -5.825772e-003, -4.686599e-002, -6.335231e-003, -6.507230e-002, 5.811091e-002, 2.449876e-002, -1.947179e-002, 4.256258e-002, 2.038311e-002, 2.297141e-002, -4.935784e-002, -1.190773e-002, -2.818639e-003, 7.363003e-002, 1.481490e-002, -1.395239e-002, -1.750100e-002, 9.913469e-004, -4.700679e-002, -5.674454e-002, -3.796496e-002, -2.172960e-002, 4.121162e-002, -9.089001e-002, -7.675571e-002, -4.999809e-003, 5.257336e-002, -5.026356e-002, 1.855480e-002, -1.307180e-003, -9.049920e-003, -5.732903e-003, -9.060873e-002, 1.871438e-003, -1.833577e-004, 5.892424e-003, 5.248936e-002, -


© ISO/IEC 2004 — All rights reserved

Copyright International Organization for Standardization
Provided by IHS under license with ISO
No reproduction or networking permitted without license from IHS
Not for Resale

1.033400e-002, 1.175489e-001, -1.953910e-002, 4.965474e-002, 8.143842e-003, 3.485018e-002, 1.485153e-002, 3.353432e-002, 1.374447e-003, 1.940554e-002, -2.687565e-003, 6.991287e-002, 3.650375e-002, 2.722361e-002, 9.570797e-002, -2.678710e-002, -1.058021e-002, -3.902457e-002, 3.053894e-002, 5.798249e-003, -1.297853e-002, 4.944655e-002, 2.774476e-002, 7.283669e-005, -3.084625e-002, 1.278698e-003, 3.626290e-002, 2.414019e-002, -6.847295e-002, -1.662631e-002, 4.742855e-002, 7.539094e-002, 4.201230e-003, 4.737570e-002, 3.862991e-002, 3.242434e-004, -4.270858e-002, -5.687096e-002, 4.527915e-002, -1.133079e-002, -9.525913e-002, -5.515638e-002, -5.003887e-002, -1.040346e-002, -1.022217e-001, -1.252108e-002, 4.422692e-002, -1.813434e-002, 7.342139e-002, 3.631249e-002, -3.761007e-002, 3.622939e-002, -2.484017e-002, -2.052097e-002, -2.707114e-002, -1.229500e-002, -3.125162e-002, -3.044454e-002, -8.249776e-003, -5.579691e-002, 2.338527e-002, 3.376247e-002, -5.542307e-002, 7.372418e-002, 2.043543e-002, -3.385277e-003, 5.214550e-003, 6.736838e-003, -5.786066e-002, 3.201749e-002, -1.497559e-002, 1.117366e-001, -5.798448e-002, -2.843455e-003, -1.087812e-002, -1.842350e-002, -4.219055e-002, -9.240955e-003, 3.175244e-003, 5.674293e-003, 2.573796e-002, 1.823224e-002, 4.597061e-002, 3.811068e-002, 1.841524e-005, -9.109334e-003, 2.004619e-002, -1.657016e-002, -4.412059e-002, -4.048474e-002, 1.378836e-002, 4.215532e-002, 8.334921e-003, -1.236704e-002, -2.229976e-002, -5.132369e-002, 1.482564e-002, 4.835109e-002, -1.014957e-002, 2.418015e-004, 2.998946e-002, 9.316978e-003, 2.545054e-002, -3.098200e-002, 1.776736e-002, 2.363932e-002, 9.388048e-003, 1.562665e-002, 1.878787e-002, 6.006067e-002, -6.417280e-002, 1.202815e-001, 3.015782e-003, -8.882725e-003, 1.130873e-001, -1.051410e-001, 6.369384e-002, 3.581329e-002, 2.572987e-003, 7.823906e-002, 3.807920e-002, -3.391388e-003, -8.497767e-003, -6.536668e-003, -2.719230e-002, -2.922855e-002, 1.209481e-002, -3.531927e-002, 2.676552e-002, 1.230380e-002, 7.984105e-003, 3.541710e-002, -2.224713e-002, 2.986634e-002, 1.144458e-002, -2.675834e-002, 8.098719e-002, -4.550169e-002, 3.309804e-002, 6.699955e-003, -1.341916e-002, -9.698677e-003, 2.621325e-002, 3.420272e-003, -2.573472e-002, 1.239542e-002, 3.851737e-002, -7.265171e-003, -1.050174e-002, -2.839769e-002, 9.720176e-003, -3.786408e-002, 9.033714e-003, 2.187652e-002, -2.122059e-002, 3.721851e-002, -3.717721e-002, 2.449202e-002, 8.467587e-002, -9.344561e-002, 1.497644e-002, -1.659312e-002, 2.113117e-002, -2.445043e-002, 2.254112e-002, 2.962953e-002, -8.399518e-003, 1.401470e-002, 3.906392e-002, 7.331967e-003, -3.118582e-003, -1.918720e-002, 1.011006e-002, -2.285097e-003, 5.368121e-003, 4.420476e-003, 1.651829e-002, 8.175900e-003, 8.217871e-003, -2.718894e-002, 1.791478e-002, 5.936685e-002, -1.654559e-002, -1.568823e-002, -2.383596e-002, 1.469740e-002, 5.575031e-003, 4.767996e-003, 1.805347e-002, -8.660467e-003, 1.104061e-002, 2.367157e-002, -2.973719e-003, 3.413707e-003, 1.861740e-003, -8.167737e-003, -4.182421e-004, 2.058485e-003, -2.131305e-002, 1.247990e-002, -1.655606e-002, 1.822904e-003, 2.444094e-003, -4.048473e-002, -3.157706e-002, 1.361137e-002, -2.069035e-002, 1.531270e-002, -3.959178e-003, 2.845718e-003, 3.899743e-004, -6.989247e-003, -7.320173e-003, 2.288802e-002, 2.727602e-002, 4.869662e-003, 6.247583e-003, 1.427880e-002, 2.861288e-005, 7.311747e-003, -2.467239e-002, 6.876297e-003, 2.954265e-002, -2.119459e-002, -5.616358e-003, 4.201698e-003, 5.073674e-003, 6.903468e-002, -6.788375e-002, 4.609669e-002, -1.264674e-002, 1.144152e-003, -9.107940e-003, -4.629222e-003, -1.057321e-002, -3.253675e-003, 1.788559e-002, 5.094065e-003, -7.398089e-003, 4.304816e-003, -7.368865e-003, 7.472392e-003, -9.746561e-003, 5.457303e-003, -2.740999e-002, 7.996885e-003, 3.899659e-002, -1.564760e-002, -2.822782e-004, -3.570477e-002, -9.346011e-017, 2.462373e-003, 1.587045e-002, 3.595732e-003, -1.500480e-002, 3.160538e-002, -1.490791e-003, -2.918673e-002, -2.022176e-002, -2.362647e-004, -1.083025e-002, 2.872158e-003, -2.872158e-003, 1.083025e-002, 2.362647e-004, 2.022176e-002, 2.918673e-002, 1.490791e-003, -3.160538e-002, 1.500480e-002, -3.595732e-003, -1.587045e-002, -2.462373e-003, -8.482293e-003, -6.964654e-003, 7.045614e-002, 3.830375e-002, -7.314701e-002, 6.544753e-002, 1.943099e-002, -3.012550e-002, 2.695134e-002, 5.034451e-002, 2.121196e-002, -1.931588e-002, -7.883377e-003, 4.167673e-002, 6.118886e-002, 5.198368e-002, 5.202085e-002, 1.172720e-002, -1.384471e-002, 1.803579e-002, -3.444274e-002, -1.217517e-002, 3.580418e-003, 4.865971e-003, -1.860148e-002, 5.623095e-003, 6.230372e-002, -3.107921e-002, 3.346931e-002, 1.582610e-002, -5.370939e-003, 6.660616e-003, -2.407972e-002, -8.215720e-002, -5.305400e-002, -3.664780e-003, -3.999196e-002, -6.868832e-002, -3.279100e-002, -3.122662e-002, -2.342040e-002, 5.262809e-002, -1.168666e-001, -1.917473e-002, -4.124900e-002, -2.325211e-003, -4.443980e-002, -9.327755e-002, 2.276827e-002, 4.142696e-003, -4.116376e-002, 4.944623e-003, 8.476050e-002, -5.693758e-002, 1.577496e-002, 1.422040e-001, 6.682507e-002, -4.246700e-002, -7.807536e-002, -1.306323e-001, -2.984444e-002, 2.392333e-002, 1.549395e-002, 3.208203e-002, -4.240683e-002, -1.172143e-001, 8.940028e-002, 3.712149e-003, 2.863854e-002, 8.146752e-003, -1.504142e-001, -1.059025e-001, -5.457210e-002, -6.784788e-002, -5.229978e-002, -3.030311e-002, -5.861242e-002, 3.209639e-003, -4.706762e-003, -5.610509e-002, -4.502733e-002, 2.782995e-002, -3.701597e-003, -5.197288e-003, 4.454302e-002, -5.373513e-003, -6.146822e-002, -7.702763e-002, 1.037885e-001, -3.905300e-002, 5.292011e-002, 1.350440e-001, 1.523859e-002, 5.108436e-002, 2.655009e-002, 4.679393e-002, 8.985661e-002, 1.320085e-001, 2.765250e-002, 2.270134e-002, 2.745486e-003, -5.578768e-003, -6.062370e-003, 1.963255e-002, -3.019913e-002, -1.173210e-002, 1.701299e-002, 1.221897e-002, 4.335607e-002, -1.380441e-002, 7.212566e-002,

© ISO/IEC 2004 — All rights reserved


Copyright International Organization for Standardization
Provided by IHS under license with ISO
No reproduction or networking permitted without license from IHS
Not for Resale

6.959077e-002, -3.842665e-002, 2.179707e-002, 6.761262e-003, 1.267599e-001, -5.531217e-002, 8.125012e-002, -1.495156e-002, 4.101946e-002, -3.471855e-002, 5.856251e-002, 1.191984e-002, -1.704337e-002, -3.155115e-002, -1.960309e-002, 3.157319e-002, -1.452597e-002, -5.039012e-002, -3.614414e-002, -2.006061e-002, -4.180311e-002, -1.446252e-003, -1.148171e-001, -1.877564e-002, 2.684841e-002, -8.310193e-002, 1.273104e-001, -2.368747e-002, -1.269745e-001, 1.957139e-003, 5.923984e-002, -6.043343e-002, 9.456305e-002, -1.784677e-002, -6.353086e-002, -4.911585e-002, -4.633267e-002, -6.099489e-003, 6.076561e-003, -2.704586e-003, -6.801552e-003, -8.229547e-003, -1.521840e-002, 1.150216e-002, 1.159316e-002, -2.847698e-002, -7.305279e-002, 2.183903e-002, 5.074055e-002, 1.123390e-002, -2.864470e-002, 1.107260e-001, 3.726914e-002, -7.367585e-002, 6.833603e-002, -2.204443e-002, -1.566049e-002, 1.046372e-002, -3.639551e-004, 1.180973e-002, -1.443729e-002, -1.156924e-003, 2.792245e-002, -2.311511e-003, -1.937121e-002, -2.962429e-002, 2.102158e-002, -2.904093e-003, 8.487243e-003, -3.400140e-002, -8.648987e-002, 9.169608e-002, 1.996200e-002, -2.916289e-002, 9.622207e-003, 3.614154e-002, 7.432871e-003, 3.280021e-002, -4.313114e-003, 1.080391e-003, 1.143014e-002, 1.381428e-002, -3.580439e-002, -1.994155e-002, -1.672909e-002, 1.909959e-002, 1.009277e-002, -1.117855e-002, -1.529720e-002, -2.500857e-002, 1.667605e-002, -2.491620e-002, 1.574769e-002, 7.129084e-003, -5.730911e-002, 9.287328e-002, 3.630309e-002, -2.575225e-003, 8.020923e-003, 4.680269e-002, -3.603465e-002, 3.044385e-002, -2.394710e-003, -1.758121e-002, -6.360984e-003, 2.500830e-003, -1.809702e-002, 2.155818e-003, 4.538543e-003, -5.664259e-003, 5.986583e-004, -1.443272e-002, 6.212397e-003, 1.657099e-002, -1.821829e-002, 6.726033e-003, 1.444825e-002, -2.129734e-002, -8.497334e-003, 5.569930e-002, -1.190613e-002, 1.426905e-002, -3.749294e-002, 4.735574e-002, -2.395059e-002, 1.088274e-002, 5.519551e-003, 1.669546e-002, 4.215963e-003, -2.257764e-003, -9.438496e-003, 3.364680e-003, 4.965392e-003, 1.319392e-003, -2.380228e-003, -5.125372e-004, 2.724358e-003, 6.676391e-003, -2.023128e-002, -4.882980e-002, 8.423063e-002, -6.389736e-002, -5.447230e-003, -1.167170e-002, -1.240510e-002, -6.069520e-004, 5.563989e-003, 1.449357e-002, 8.639596e-003, 2.175027e-002, 7.174066e-003, -1.683058e-003, -1.146821e-002, -1.405329e-002, -4.327230e-003, 4.592287e-003, 1.020643e-002, 1.258762e-002, -6.498362e-003, 1.662706e-002, -2.393968e-002, -8.420169e-003, 2.642149e-002, -7.079052e-002, 8.465954e-002, 8.088254e-002, -5.863313e-002, 3.511536e-002, -1.073292e-002, -2.786402e-003, 1.527249e-002, -2.613168e-004, 5.530573e-003, 1.785741e-002, 2.008023e-003, -3.705959e-003, 3.263931e-003, -2.642561e-004, -7.755127e-003, -7.057918e-003, -4.945173e-003, 1.802898e-002, 5.228292e-004, -1.540611e-002, 8.454811e-003, -1.412157e-002, 1.895060e-002, -6.238284e-002},

{-4.569848e-005, -6.015675e-004, -3.877364e-003, 1.031638e-002, 4.345356e-002, -4.701869e-003, 7.018669e-003, -8.309453e-003, -2.726687e-002, 3.481138e-002, -1.434640e-002, -9.685061e-003, -9.685061e-003, -1.434640e-002, 3.481138e-002, -2.726687e-002, -8.309453e-003, 7.018669e-003, -4.701869e-003, 4.345356e-002, 1.031638e-002, -3.877364e-003, -6.015675e-004, -1.233122e-002, 1.952131e-002, -5.224803e-002, 5.662548e-002, 3.036346e-003, -7.304270e-002, -6.601868e-002, -8.102538e-002, -1.787446e-002, -2.321815e-002, -1.181226e-003, 1.914724e-002, 1.585627e-002, 3.982633e-002, -9.888486e-003, -1.533403e-002, -8.201987e-002, -7.457482e-003, -1.692709e-002, 2.547943e-002, 1.781058e-002, -1.738668e-002, -2.293021e-002, 3.226139e-002, 4.716253e-003, -6.098517e-002, 5.137361e-002, 3.244517e-002, -7.092418e-003, 4.087620e-002, 5.344293e-002, 3.871058e-003, 3.963034e-002, 3.218809e-003, 1.324906e-002, 2.572080e-002, 5.614815e-002, 2.630944e-002, 2.238450e-002, 2.683869e-002, 3.453860e-002, -5.044765e-003, 1.606162e-003, 8.255620e-002, 1.831930e-002, 1.013990e-001, -3.592182e-002, -3.088901e-003, -2.242125e-003, -1.268077e-002, -6.363023e-002, -2.307612e-002, -4.665956e-002, -1.811994e-002, 5.493789e-002, -4.889915e-003, -4.078964e-003, 2.507012e-002, -5.367560e-002, -4.456048e-002, 6.628031e-002, 5.335386e-002, -3.161923e-002, 1.439427e-002, -9.563623e-002, -2.236200e-002, 7.421688e-002, -6.116265e-002, -4.625723e-002, 5.329789e-002, 4.096535e-002, -1.339546e-001, -1.200613e-002, -7.505383e-002, -4.051240e-002, -4.560782e-002, -6.198097e-002, -2.585963e-002, -1.086037e-002, 1.044744e-002, 2.432043e-002, 1.364286e-002, -1.000734e-003, 2.653975e-003, -3.369829e-004, 7.891341e-003, -7.313029e-003, -5.508688e-003, 4.534741e-002, 1.202670e-002, -1.340507e-001, -2.588098e-002, -9.781390e-002, -4.015374e-002, -6.575738e-002, -5.903936e-002, -8.478834e-002, 2.838348e-002, 1.117158e-002, 1.528043e-002, 4.000781e-002, 2.077311e-002, 3.066714e-002, 1.221673e-002, -2.440731e-002, -5.260499e-002, -3.842202e-002, 3.235016e-002, 5.771460e-002, 2.086828e-002, 7.062414e-002, 3.738059e-003, -6.269085e-002, -1.674748e-001, 8.748415e-003, 1.122258e-001, 5.991893e-002, -8.912480e-002, -6.009952e-003, 1.623758e-002, 5.181497e-002, -1.198090e-002, 3.417691e-002, 6.222963e-003, -9.128900e-003, -2.507831e-002, -4.135821e-002, -2.906545e-004, -1.539994e-002, -9.320602e-003, -1.595619e-002, -1.858422e-002, -3.048809e-002, -5.141686e-002, -1.959745e-003, 7.243217e-002, -7.174358e-002, 7.625574e-002, 2.616444e-002, -3.158544e-002, 1.806270e-002, 8.005816e-003, -1.608227e-002, 7.209972e-002, 1.559680e-002, -2.653726e-002, 2.600084e-002, -1.468522e-002, -2.330744e-002, 1.687286e-002, -1.212824e-002, -1.550085e-002, -2.397633e-002, 2.818042e-003, -7.450161e-003, -1.335240e-002, -4.025722e-002, -7.054575e-002, -2.910888e-002, -1.104827e-002, 6.676671e-002, 4.600380e-002, -6.162139e-002, -2.892036e-002, -4.226589e-002, 1.083384e-001, 5.823235e-002, -4.447553e-002, -2.330033e-003,


© ISO/IEC 2004 — All rights reserved

Copyright International Organization for Standardization
Provided by IHS under license with ISO
No reproduction or networking permitted without license from IHS
Not for Resale

1.548772e-003, 2.255930e-003, 9.383161e-003, 1.400722e-002, 6.584471e-003, -2.698161e-002, -2.518898e-002, -3.308528e-003, 2.365203e-002, -2.688862e-002, 5.750000e-002, 1.688975e-002, 2.008578e-002, 8.890605e-003, -3.940159e-002, -6.543765e-002, 3.196874e-002, 2.031664e-002, -3.660593e-002, 9.025767e-002, -1.777435e-002, -2.682396e-002, 2.948241e-002, -1.056269e-002, -4.840262e-003, 2.587689e-002, 1.757779e-002, 9.861541e-003, 8.303900e-003, -2.565885e-002, -1.149915e-002, -7.654189e-003, 1.277535e-002, -9.339572e-003, 4.548720e-002, -2.591853e-002, 1.005508e-002, -2.766390e-002, -4.127557e-002, -6.544241e-003, 8.575265e-003, 2.511234e-002, 2.084107e-002, 2.602124e-002, -2.651022e-002, -7.047620e-003, -7.524650e-003, -3.297113e-003, 1.360745e-002, 2.166147e-002, 5.815954e-003, 4.790439e-003, -3.553638e-004, -5.500206e-003, 4.573311e-003, -1.671919e-002, 7.647733e-003, 4.261729e-002, 1.050361e-002, -5.407347e-002, 3.697185e-002, 1.488359e-003, 3.268299e-002, -7.298483e-002, 3.317929e-003, 6.601989e-002, -4.012298e-002, -2.288019e-002, 1.974599e-002, -8.604744e-003, 4.284275e-003, 6.322311e-003, -6.390788e-003, 6.422819e-003, 1.722293e-002, 9.511715e-003, -2.265982e-002, 1.015745e-003, -8.869711e-003, -5.983324e-003, 6.345654e-002, 3.047087e-002, -5.485104e-002, -4.246059e-002, -3.753681e-002, 2.365664e-002, -1.620200e-002, 1.339806e-002, 9.181634e-003, -3.665763e-002, 3.121706e-002, 1.334930e-002, -1.256809e-002, -1.080517e-002, 6.723350e-003, 6.041227e-003, -1.119513e-003, 1.604415e-002, 7.370220e-003, -2.029589e-002, -1.123749e-002, 2.110446e-002, 6.794980e-003, 1.460952e-002, 1.072015e-002, -4.329030e-002, 1.177231e-002, 2.290763e-003, 3.442749e-004, -9.808522e-003, -1.563039e-002, 1.235627e-002, -3.800567e-003, -1.499284e-002, -5.219351e-003, -7.326319e-003, 5.975903e-003, 6.357619e-003, 4.301754e-004, -3.042938e-003, -6.072097e-003, 1.167294e-002, 6.698448e-003, -8.211311e-003, -1.302617e-002, 1.635710e-002, 3.040540e-002, 2.158685e-002, -6.634270e-002, 3.041538e-002, -2.352056e-017, -1.006901e-003, 9.916725e-003, -2.592793e-002, 2.896201e-002, 1.513685e-002, -4.146145e-002, 6.288104e-002, -3.075898e-002, -2.122295e-002, -2.624429e-002, 5.597919e-003, -5.597919e-003, 2.624429e-002, 2.122295e-002, 3.075898e-002, -6.288104e-002, 4.146145e-002, -1.513685e-002, -2.896201e-002, 2.592793e-002, -9.916725e-003, 1.006901e-003, 6.116338e-003, -3.149759e-002, 3.889772e-002, -7.365558e-002, 6.519023e-003, 3.353135e-002, 3.964252e-002, -5.914524e-002, 4.288760e-002, 2.994630e-003, -3.544010e-002, -1.130689e-001, 6.427669e-002, 5.934414e-002, 5.287382e-002, 5.636631e-002, 4.592750e-002, 1.109881e-001, 3.803022e-002, 4.954832e-002, 3.512416e-002, 2.327350e-003, 3.411128e-002, -6.348819e-003, 4.461808e-002, -3.592076e-003, -2.768271e-002, 3.092024e-003, -2.102146e-002, -6.051154e-002, 5.465034e-002, -3.716609e-002, 1.582602e-002, -9.429585e-003, 4.685753e-002, 9.874829e-003, -9.909132e-003, -3.606574e-003, 1.094365e-002, 9.008692e-002, -7.401771e-002, 4.843848e-002, 6.421541e-002, -2.691602e-003, -4.072457e-002, -1.645957e-002, 4.642663e-003, -6.380868e-003, 8.792884e-002, -6.065427e-002, -5.008506e-002, 2.959226e-002, 3.162430e-002, 1.362379e-002, 6.270670e-002, 1.797607e-003, 4.616521e-003, -7.268289e-002, -5.429574e-003, 5.687438e-002, 6.621808e-003, -3.385339e-003, -1.538404e-002, 3.737184e-002, 1.809600e-001, 1.521853e-002, -7.075475e-002, 3.334555e-002, 1.515201e-002, -7.222128e-003, -5.540511e-002, 2.533920e-002, -2.067310e-002, -1.273176e-001, -1.654926e-001, 1.007591e-002, -5.531608e-002, -3.309398e-002, -1.992595e-002, -9.609559e-002, -2.416056e-002, -4.274791e-002, -7.515026e-002, 1.743913e-002, -5.620175e-003, 3.621758e-002, 6.226172e-002, -1.105283e-001, -9.027153e-002, -8.300522e-002, -1.747558e-001, 8.117265e-002, -9.617562e-003, 3.748455e-002, 2.893387e-002, -1.744817e-002, -2.899200e-003, 8.097365e-002, -1.276474e-001, -2.118226e-002, -2.701797e-002, -9.508036e-002, -2.753866e-002, 7.481984e-003, 1.797064e-002, 9.714985e-003, -1.693581e-002, 1.366788e-002, 2.123085e-002, -5.212376e-002, 5.122437e-002, 2.595958e-003, -1.920985e-002, 1.013793e-001, -6.163405e-002, -4.172556e-002, 2.397279e-002, 9.732919e-003, -5.258781e-002, -5.248302e-002, -1.461368e-001, 2.120139e-002, 8.455948e-003, 2.121067e-002, 1.174651e-002, 2.249479e-004, 4.856279e-002, 2.959765e-002, -9.836312e-003, -3.734819e-002, 8.186452e-003, 4.375493e-002, 9.217896e-002, 1.063376e-003, -1.922274e-002, -9.226220e-002, 2.840631e-002, -7.498969e-002, 1.483451e-002, -1.778007e-002, -1.468838e-002, 5.597604e-002, 5.728359e-005, -1.506879e-002, -2.750676e-002, 5.047083e-002, -8.152371e-003, -5.409574e-002, 2.181963e-002, 2.026629e-002, 3.638478e-003, 2.314246e-002, 3.086825e-003, -3.287005e-002, 1.931305e-002, 1.580479e-002, -2.453557e-002, -3.286139e-003, -4.799358e-002, -2.160229e-002, -2.261126e-002, 4.546143e-002, -7.844428e-003, 6.971176e-004, 8.517331e-003, -2.899104e-002, -5.038239e-002, -1.338213e-002, 2.288820e-002, 4.384904e-003, 1.230518e-002, 1.790999e-002, 3.704551e-002, 2.391960e-002, 2.806475e-002, 1.259733e-002, -1.710141e-002, 3.343864e-003, 2.431801e-002, -1.013437e-002, -4.245628e-002, -3.167784e-002, 4.069953e-002, -1.350479e-002, -4.616200e-002, -2.418915e-002, 4.636945e-002, 3.116628e-002, -4.683409e-002, -5.543899e-002, 5.664696e-002, -9.679228e-004, 4.657716e-003, 2.082708e-002, 3.487860e-002, -1.034253e-002, -1.883025e-003, 9.801783e-003, 1.260923e-002, -7.385694e-003, -3.209940e-002, 5.576453e-002, 4.405348e-004, -3.568651e-002, -2.470364e-002, 3.150557e-003, 5.521177e-002, 2.866786e-002, -4.550769e-002, 5.887399e-002, -4.990597e-003, 1.897282e-002, 3.834457e-003, -2.966876e-002, 2.163629e-002, 4.360205e-003, 1.333194e-002, 2.010503e-002, 5.878523e-003, -5.561479e-003, -5.082196e-003, 1.914715e-002, 8.189644e-003, 6.475138e-003, -1.116488e-002, -1.746976e-002, 1.832262e-002, 7.925704e-003, -1.952711e-003, -1.463460e-002, -3.336834e-002, -

© ISO/IEC 2004 — All rights reserved


Copyright International Organization for Standardization
Provided by IHS under license with ISO
No reproduction or networking permitted without license from IHS
Not for Resale

1.339929e-002, 5.328925e-002, 3.376077e-002, -3.708189e-002, -3.051470e-002, 2.416008e-002, 1.410276e-002, -4.418098e-003, 1.754496e-002, 1.748197e-002, 3.666252e-003, -1.441367e-002, -2.165331e-005, 5.115832e-003, 4.345764e-003, -2.854292e-002, 7.131262e-003, -8.953833e-003, -4.990115e-002, 3.863478e-002, 1.760071e-002, -3.728125e-002, -3.453454e-002, -4.149623e-002, 7.499605e-002, -7.512982e-003, -2.743643e-002, 2.206877e-002, 1.880986e-002, -4.413756e-003, 1.231731e-003, 1.090700e-003, 7.795405e-003, -7.108105e-004, -7.199116e-003, -1.662882e-002, 1.578192e-002, 1.541286e-002, -1.541819e-002, -1.739016e-002, 7.977040e-003, 7.720904e-003, 1.744273e-003, 2.225707e-002, -1.788727e-002, -1.535018e-002, 1.775069e-002, 2.227052e-002, -4.840581e-003, 4.306560e-003, -2.126939e-002, 2.409727e-002, 8.646518e-003, -1.938305e-003, 1.457143e-002, -2.163700e-003, 2.340099e-004, -1.003683e-002, -6.427837e-003, -7.095699e-003, 5.122068e-003, 1.607580e-003, -1.422842e-002, -1.397114e-002, 8.812703e-003, 1.560169e-002, -1.536086e-002, -2.723141e-002}
};

mean vector $\boldsymbol{m}_1^f$[70]={
1.449813e+004, 2.365376e+003, 2.684330e+004, -1.135244e+004, 1.012881e+004, -2.848186e+003, -8.691007e+002, 4.542617e+003, -2.150270e+003, -1.124480e+002, -3.778692e+002, 2.769692e+003, -5.579386e+002, 7.619448e+002, 1.796138e+002, 3.608870e+003, 7.440309e+002, 2.346252e+002, -4.283591e+002, 1.262302e+003, -4.216932e+002, -1.379315e+003, 1.891778e+003, -4.166943e+002, 4.773570e+001, -1.569348e+003, 1.373100e+002, 7.609664e+001, 1.405371e+003, 4.318617e+002, 1.113669e+002, 1.092324e+002, 4.932555e+002, -1.338848e+003, 1.366027e+003, 8.895605e+001, 7.302834e+002, -3.905712e+002, 2.489418e+002, 9.703610e+001, 5.626557e+002, -6.292313e+002, 2.525245e+002, -7.280710e+002, 3.645543e+002, 3.456381e+002, -2.129971e+002, -4.677950e+002, 9.800134e+002, -1.980840e+002, 7.143160e+002, 6.640791e+002, -7.110384e+002, 4.625249e+002, -5.375672e+001, 7.220420e+002, -3.382861e+002, 1.553239e+002, -7.684642e+001, 6.612040e+002, 1.403494e+002, -2.846490e+002, 5.163987e+002, 1.106353e+001, 1.288248e+002, 4.998735e+002, 4.258852e+002, 4.600162e+002, 4.521501e+002, 5.701900e+002};

PCLDA basis matrix $\boldsymbol{\Psi}_2^f$[80][856]={
{3.442792e-003, 1.427767e-002, -2.659309e-003, 3.005033e-002, 1.830422e-002, 1.020153e-002, 1.051169e-002, 4.883491e-003, -8.772289e-003, 2.402582e-003, -1.280942e-002, 6.943970e-002, -1.280942e-002, 2.402582e-003, -8.772289e-003, 4.883491e-003, 1.051169e-002, 1.020153e-002, 1.830422e-002, 3.005033e-002, -2.659309e-003, 1.427767e-002, 1.590728e-002, 2.495406e-002, 1.482367e-002, 1.103533e-002, -2.212404e-002, -1.535166e-002, 3.535480e-002, 5.002538e-003, 4.805054e-002, -5.918827e-003, 8.052208e-004, 2.718313e-002, -3.789442e-003, 4.319132e-002, 2.122892e-002, 2.433617e-002, 4.405135e-002, -1.034790e-002, -8.617418e-003, 1.696448e-002, 3.213151e-002, 2.975027e-002, 4.277076e-003, 4.079887e-003, 5.999783e-003, 9.195146e-004, 1.294946e-002, -1.344490e-002, 7.533988e-003, -2.048148e-002, 8.306393e-002, 1.369522e-002, 1.419409e-002, -6.840066e-002, -4.140582e-002, 2.104051e-002, -1.921633e-003, 9.738022e-003, -1.901783e-002, -2.218158e-002, -1.657074e-002, -1.670153e-003, 5.886438e-003, 6.538579e-003, 2.714866e-002, 1.300897e-004, 3.274745e-002, -7.693994e-003, 6.079502e-003, 2.552505e-003, 2.319076e-003, 1.507500e-002, 2.589140e-002, -2.066226e-002, 5.926725e-003, 3.741042e-002, 2.241029e-002, 2.494083e-002, -4.704326e-003, 1.053329e-002, 8.502412e-003, 4.234192e-003, 4.239764e-002, 2.252339e-002, 2.067116e-002, 2.497312e-002, 6.245420e-003, -5.034530e-003, -2.944196e-003, -7.116277e-003, 1.685516e-002, -6.729429e-003, 8.478885e-003, 4.663829e-002, 3.831369e-003, 1.340078e-002, 2.081574e-002, 3.624698e-002, 1.328313e-002, -4.166947e-003, -8.830700e-003, -1.313431e-002, 1.081152e-002, -1.433558e-002, 2.143639e-002, 7.937877e-003, -1.453397e-002, 1.168935e-003, 7.404873e-003, -9.646909e-003, 2.122305e-002, 7.769687e-003, 1.439354e-003, 2.107767e-002, 1.838270e-002, -2.091690e-002, 3.402246e-002, 2.406519e-002, 1.864205e-002, 1.565583e-003, -1.578561e-002, -3.047613e-002, 5.100442e-002, -3.493717e-003, 3.405516e-002, -4.888572e-003, 4.215486e-002, -3.346026e-003, 3.029146e-002, 2.741777e-002, -1.008484e-003, -2.942719e-002, 1.532829e-002, 1.619943e-002, 1.128111e-002, -1.385207e-002, -1.913475e-002, 1.158296e-002, -1.806360e-002, 3.167990e-002, 2.993675e-002, 9.006161e-003, 9.257109e-003, -1.284344e-002, 4.073506e-002, -6.131784e-003, -1.329508e-003, -2.411688e-002, -3.559278e-002, -2.094671e-003, -1.669499e-003, 1.180020e-002, -1.148239e-002, 1.273935e-002, -4.359494e-002, 2.408680e-002, 3.548903e-002, 4.317990e-002, -9.362535e-003, 4.097041e-002, 5.837908e-004, -8.734428e-003, 1.057399e-002, -1.138239e-002, -1.356249e-003, -1.688493e-002, 1.591634e-002, 1.764775e-002, -1.550397e-003, 2.168944e-002, -2.215835e-003, 2.690843e-002, 3.948955e-002, 3.913573e-002, 2.118883e-002, 3.381248e-002, -1.650683e-002, 7.661563e-003, -4.727907e-002, 1.535013e-002, -3.182602e-002, 5.555475e-003, 2.292403e-003, -4.835596e-003, 2.956322e-003, -8.037939e-004, -6.129163e-003, -1.755761e-002, 1.792117e-002, 5.853208e-002, -2.597142e-002, -7.386139e-003, 5.232709e-003, -1.313395e-002, -2.304640e-002, -1.901813e-002, -1.523287e-002, 2.494246e-002,


© ISO/IEC 2004 — All rights reserved

Copyright International Organization for Standardization
Provided by IHS under license with ISO
No reproduction or networking permitted without license from IHS
Not for Resale

1.712887e-002, 4.595345e-002, 1.220771e-002, -1.624330e-002, 2.223763e-002, 1.733691e-002, -1.818625e-002, 7.132234e-003, -6.584687e-003, -2.267513e-003, 1.153744e-002, 4.854414e-003, -1.843798e-003, -8.044731e-003, -3.493415e-002, 9.212676e-003, -1.457901e-002, -4.379466e-002, 1.269708e-002, 1.247929e-003, 1.393768e-002, -2.804868e-002, -1.175098e-002, -3.458439e-002, -2.336791e-002, -8.936950e-003, 2.047245e-002, -9.845083e-003, 2.688920e-003, 2.700634e-003, -5.540788e-003, -2.665619e-003, 1.039204e-003, -1.260796e-002, -1.319973e-002, 7.624622e-003, -3.650532e-002, 2.079558e-002, -5.962653e-003, -1.036296e-002, 2.136345e-002, 9.195268e-003, -2.054317e-002, -1.276050e-002, -3.324895e-002, -1.249443e-002, 3.615492e-002, 1.020674e-002, 1.031716e-002, -1.191952e-003, -8.520308e-003, 7.578014e-004, 9.655285e-004, -9.180685e-003, -1.676319e-002, 1.130558e-002, -5.399460e-003, -1.719656e-002, -3.497401e-002, -1.178732e-002, 1.707330e-002, 7.246038e-003, 4.329948e-002, 3.630024e-002, -5.710669e-003, -1.740726e-002, 2.045205e-002, -3.828701e-002, 8.737344e-003, 3.896602e-002, -1.101303e-002, -1.563778e-002, -3.703785e-003, 6.512017e-003, 7.616359e-003, 4.601389e-003, 2.025644e-005, -3.765025e-003, -2.068099e-002, -6.375634e-003, -8.212604e-003, 3.670550e-002, -3.452540e-003, -6.576545e-002, -1.015313e-002, -8.593807e-003, -1.504310e-002, -1.370286e-002, 5.200925e-003, 3.883941e-002, -1.282555e-002, 1.385275e-002, -2.841538e-004, 1.012915e-002, 7.122901e-003, 4.363971e-003, 5.699854e-003, -6.188727e-003, 5.634150e-003, -8.299964e-003, -1.555956e-002, -1.249425e-002, -1.560506e-002, 3.885020e-004, -8.009126e-003, 6.060575e-005, 1.684060e-002, -1.206868e-003, 2.289718e-002, -2.065266e-002, 4.830095e-002, -2.567671e-003, 6.329964e-003, -6.562304e-002, -6.562304e-002, 6.329964e-003, -2.567671e-003, 4.830095e-002, -2.065266e-002, -2.481039e-002, 6.982182e-003, 6.861072e-002, 6.017688e-002, 7.009159e-002, 5.191341e-002, 2.549225e-002, 4.883472e-002, 7.007068e-002, 3.096389e-002, -2.219648e-002, -1.110084e-002, 2.275551e-002, -6.761381e-003, 1.561431e-002, 1.529297e-002, 1.482296e-002, -1.337144e-002, -1.261778e-002, -9.152988e-003, 1.119491e-002, -6.834487e-002, 6.489011e-002, -2.617858e-002, 6.201515e-002, 3.624498e-002, 2.288575e-002, 1.996398e-002, -9.490192e-003, 2.410222e-003, -2.579577e-002, 2.059839e-002, 2.493818e-002, -1.023424e-001, 1.536022e-002, 3.698868e-002, 1.683937e-002, 1.188589e-002, 1.950418e-002, -3.180666e-003, -6.743877e-003, -1.398899e-002, 6.880599e-003, -1.501358e-002, -1.484751e-002, 5.877231e-002, 2.618770e-003, 1.135559e-002, 1.583332e-002, 6.116307e-003, -9.930187e-003, -1.362431e-004, -5.933106e-003, -2.373648e-002, 1.821800e-002, 2.898826e-002, 5.366412e-002, 1.022070e-002, 3.297097e-003, 4.824341e-003, 1.007455e-002, -8.431510e-003, -5.325483e-003, -1.142791e-002, -1.470856e-002, 2.980352e-002, 1.461018e-002, -3.144439e-002, 1.612978e-002, -7.729992e-003, 4.361338e-002, -1.275675e-002, -1.275675e-002, 4.361338e-002, -7.729992e-003, 1.612978e-002, -3.144439e-002, -2.780453e-002, 2.003238e-002, 2.002102e-002, 5.412412e-002, 4.479465e-002, 5.347588e-002, 3.334193e-002, 8.380817e-002, 2.730663e-002, 6.694595e-002, -4.215148e-002, -4.489643e-003, -9.526893e-003, -4.846576e-002, -2.657654e-002, -1.477117e-002, -1.123154e-002, -1.726167e-002, -4.027891e-003, 3.295848e-002, 1.628463e-002, -2.702831e-005, 4.637216e-003, 2.795899e-002, -1.074115e-002, -3.049924e-002, -1.171122e-002, -3.284834e-003, 9.142102e-003, 8.705717e-003, 3.120042e-002, 1.186464e-002, -4.945734e-002, -8.340282e-003, -1.531918e-002, 4.916719e-003, -2.250191e-002, -8.654466e-003, -6.401412e-003, 1.159744e-002, 2.306308e-002, 4.825169e-003, 4.547674e-002, 6.838488e-002, -3.488971e-002, 8.363926e-003, -1.862362e-002, -1.011104e-002, -1.119537e-002, -2.431667e-003, 2.956693e-003, 2.771262e-003, 5.039051e-003, 1.633298e-002, 6.218415e-002, -7.960879e-003, 2.929857e-002, -1.294527e-002, -1.003795e-002, -5.525633e-003, -3.799406e-003, 1.337948e-002, 2.131028e-003, 4.078882e-003, 1.352194e-002, 3.253126e-002, -1.203198e-002, 4.098503e-003, 2.056885e-002, -5.718755e-003, 3.408465e-002, 4.091361e-002, 4.091361e-002, 3.408465e-002, -5.718755e-003, 2.056885e-002, 4.098503e-003, -3.085663e-002, 2.399755e-002, 1.647128e-002, 2.731410e-002, 3.356140e-002, 7.841501e-003, -1.333256e-002, -2.620358e-002, 8.329654e-003, 6.560507e-003, 2.211377e-003, -5.717383e-002, 8.227285e-002, -1.245723e-002, -3.447540e-002, -1.606779e-003, -7.763507e-003, -1.187413e-002, -1.378613e-002, -2.203655e-002, -4.503115e-002, -3.941796e-003, -3.696464e-002, 9.449683e-002, 3.893911e-002, -4.350451e-003, -9.594425e-005, 2.640703e-003, 3.152055e-003, 4.065496e-003, 1.817533e-002, 4.919946e-002, 4.976994e-003, 7.551330e-004, 2.618283e-002, -1.186909e-002, -1.318801e-002, -3.987309e-003, -3.569399e-003, -1.546416e-003, -2.809778e-003, -5.187338e-003, -1.999960e-002, -7.606105e-003, -3.192393e-002, -3.925296e-002, -5.785284e-003, 6.069854e-003, -1.405357e-003, -7.146522e-003, 1.870911e-003, -8.427016e-003, -7.728329e-003, 4.563275e-003, -5.410419e-003, -1.386774e-002, 3.126646e-002, 1.439062e-003, -8.104864e-004, 6.786893e-004, -1.633080e-003, -1.066906e-003, -4.201830e-003, 4.905483e-003, -6.366499e-004, 2.078243e-004, -2.203260e-002, 5.347918e-004, 2.827211e-002, -1.915894e-002, 2.355619e-002, -1.321992e-002, -1.321992e-002, 2.355619e-002, -1.915894e-002, 2.827211e-002, 5.347918e-004, 3.879614e-003, -1.421927e-002, 4.595832e-004, 5.936432e-002, -2.581928e-003, 1.662598e-005, 1.004934e-002, 3.838855e-002, 3.008604e-002, 2.987089e-002, 7.959141e-002, -1.292806e-002, -3.412446e-002, -6.182157e-002, -3.489736e-002, 5.468063e-002, 1.467823e-002, 2.892985e-002, 1.994886e-002, 3.426044e-002, 3.491843e-002, 2.391071e-002, -1.058618e-003, 4.162507e-002, 7.404156e-002, 3.495413e-002, -1.218334e-002, 6.100186e-003, 1.132834e-002, 1.865184e-002, 3.186150e-002, 3.834530e-003, 5.296713e-002, -1.088887e-002,

© ISO/IEC 2004 — All rights reserved


Copyright International Organization for Standardization
Provided by IHS under license with ISO
No reproduction or networking permitted without license from IHS
Not for Resale

6.586024e-003, 1.543161e-003, 3.294294e-003, 1.394924e-002, -5.825355e-003, -7.239593e-003, 9.725826e-003, -3.653183e-003, -1.592382e-002, -9.361098e-003, -4.805878e-002, -9.495944e-003, -6.027947e-003, 9.628023e-003, -2.063432e-003, 4.378431e-004, -1.390211e-003, -8.121100e-003, -9.738424e-003, -1.285649e-002, -2.058352e-003, -1.494622e-002, -7.084777e-004, 1.008222e-002, 3.679942e-003, -3.048744e-003, 2.110868e-003, -5.718407e-003, -1.131434e-002, -5.245026e-003, -8.281912e-003, 3.980836e-003, 3.992984e-002, -1.037267e-002, -1.851155e-002, -1.851155e-002, -1.037267e-002, -1.031587e-001, 5.899696e-002, 5.907045e-002, 2.348790e-002, 5.274189e-002, -4.131174e-002, 4.368770e-002, 2.269374e-002, 8.974540e-003, 2.324848e-002, -7.468175e-003, -3.722830e-002, -4.993844e-003, -4.993844e-003, -3.722830e-002, 6.081338e-002, -4.543595e-002, -1.633392e-002, -7.734475e-003, -1.132241e-002, -9.611611e-003, -3.312928e-003, -1.666026e-003, -5.636995e-003, -1.156823e-002, -5.743261e-002, -4.584892e-002, -1.325654e-002, -1.325654e-002, -4.584892e-002, 9.201356e-002, -3.114652e-002, -1.740049e-002, -1.924197e-002, -4.499826e-002, 2.362861e-002, -1.573527e-002, -7.975294e-003, -2.226883e-003, -1.584389e-003, 8.174413e-002, -2.429980e-002, -1.200562e-002, -1.200562e-002, -2.429980e-002, -1.191396e-001, 3.570137e-002, 1.961505e-002, 5.948117e-002, 1.826219e-002, -4.541663e-002, 2.385534e-002, 8.579108e-003, 1.432375e-002, 3.904632e-002, 5.175868e-002, -1.146656e-001, -4.610628e-003, -4.610628e-003, -1.146656e-001, -8.775815e-002, -3.190962e-002, 1.403707e-003, 1.428386e-003, -9.645578e-003, -3.510727e-002, -1.535133e-002, -5.189514e-003, -4.718535e-003, -1.629671e-002, -6.132317e-002, -1.775513e-001, -4.934722e-002, -4.934722e-002, -1.775513e-001, 1.900488e-001, -4.640301e-002, -2.490134e-002, -1.042126e-002, -2.861111e-002, 3.327801e-003, -5.319544e-003, -9.501602e-003, -3.498586e-003, -1.992244e-002, -6.973977e-002, -1.954470e-001, -3.420415e-002, -3.420415e-002, -1.954470e-001, 2.336052e-001, -2.375243e-002, -1.216447e-002, -2.955638e-002, -5.400309e-002, 1.631260e-002, -2.103286e-002, -1.180254e-002, -7.556438e-003, -9.964756e-003, 6.003844e-002, -3.354626e-002, 3.083907e-002, 3.083907e-002, -3.354626e-002, -2.157229e-002, 8.599377e-003, -7.345570e-003, -7.302024e-003, -3.970754e-003, -1.296869e-002, -8.077066e-003, -7.016355e-003, 1.743843e-003, -1.165743e-002, 1.883083e-001, -4.109623e-003, -1.865263e-002, -1.865263e-002, -4.109623e-003, -1.073800e-002, 1.635665e-002, -3.158483e-003, 1.264263e-002, -5.852450e-003, -3.361040e-003, 1.641904e-003, 2.546849e-003, 3.155649e-003, 1.799762e-003, -9.466592e-002, 1.335981e-002, -3.034785e-002, -3.034785e-002, 1.335981e-002, 1.187246e-002, -4.022512e-003, -5.024386e-003, -9.771428e-003, -9.689602e-003, 2.620044e-002, -2.842897e-003, -2.136003e-003, -3.310431e-003, 1.440067e-002, -1.709031e-001, 8.113341e-002, -1.610230e-002, -1.610230e-002, 8.113341e-002, 1.044624e-002, -5.503884e-003, -8.672700e-003, -1.203714e-002, -1.529150e-002, 2.563037e-002, 1.016713e-002, -3.953619e-003, -6.492622e-004, -6.209388e-004, 1.491739e-001, -2.736454e-002, -2.449825e-003, -2.449825e-003, -2.736454e-002, 1.444103e-002, -6.749436e-003, 1.604779e-002, 8.656470e-003, 3.448916e-002, 3.077518e-003, 1.184477e-002, 1.040765e-002, 7.956142e-003, 1.160895e-002, 2.351882e-002, -3.644998e-002, -2.022770e-002, -2.022770e-002, -3.644998e-002, -5.410216e-002, 2.762820e-002, 9.895078e-003, 4.221707e-003, 3.755745e-002, -6.003217e-003, 2.455697e-002, 1.251857e-003, -2.894981e-003, 4.444781e-003, -1.291932e-001, -8.988588e-002, -3.862180e-002, -3.862180e-002, -8.988588e-002, 1.273073e-002, 5.931897e-004, -9.057179e-004, -1.831693e-002, -1.056832e-002, -2.492764e-002, -2.956032e-003, -4.885217e-003, -2.530567e-003, -7.372175e-003, -6.583386e-002, -1.036408e-001, -4.908610e-002, -4.908610e-002, -1.036408e-001, 4.698185e-003, 7.064807e-003, -6.634245e-003, 1.277554e-002, 1.446970e-002, -2.832063e-002, 6.573293e-003, -7.246091e-004, 3.521647e-003, -4.851904e-003, 6.553046e-002, -3.492041e-002, -6.529209e-002, -6.529209e-002, -3.492041e-002, -1.017501e-001, 5.034031e-002, 2.020255e-002, 2.334690e-002, 1.902928e-002, -2.143517e-002, 1.219320e-002, 5.857056e-003, 5.444655e-003, 4.581408e-004},
{2.617451e-002, 8.116550e-003, -6.584807e-003, -1.253971e-002, -2.743266e-003, -9.958152e-003, -8.461309e-003, -1.325606e-002, -5.705961e-003, -2.960436e-002, 4.562567e-003, -5.806053e-002, 4.562567e-003, -2.960436e-002, -5.705961e-003, -1.325606e-002, -8.461309e-003, -9.958152e-003, -2.743266e-003, -1.253971e-002, -6.584807e-003, 8.116550e-003, -3.588492e-002, -4.338115e-003, -2.905761e-002, -2.707675e-002, -3.134005e-002, 1.546019e-002, 1.267116e-002, 2.080251e-002, 1.088431e-002, -5.535159e-002, 5.190015e-002, 5.757149e-002, -1.190209e-002, -8.965636e-003, -2.868054e-003, -1.076312e-002, -8.753469e-003, 2.948979e-003, -2.873764e-002, -1.311303e-002, -2.368678e-002, -2.339197e-002, 1.034802e-002, -2.047653e-002, -1.047765e-002, 1.347277e-002, -3.145173e-002, 3.786965e-002, -1.659978e-002, 1.255310e-002, 9.034084e-003, -6.394574e-003, 3.162121e-002, 5.504831e-002, -3.222220e-002, 8.204221e-003, 1.628549e-003, 5.556931e-003, -1.067950e-002, 1.985908e-002, -3.013147e-002, -2.289583e-002, -3.933407e-002, -1.091437e-002, -4.111588e-002, -1.884367e-002, 8.078876e-003, -1.360822e-002, -2.182308e-002, 6.279601e-003, 1.718293e-002, -4.379450e-002, -1.826797e-002, -1.978243e-002, 1.662412e-002, -2.186792e-002, 9.524117e-003, 2.992833e-002, -4.017099e-002, 1.498741e-002, 1.931987e-003, -2.970427e-002, -2.254270e-002, -2.140092e-002, 2.056588e-002, -2.239024e-002, -8.240877e-003, -5.818817e-002, -8.162224e-002, -1.075991e-002, -2.460551e-002, 1.816067e-002, -2.142335e-002, -1.078453e-002, -2.326713e-002, -5.813411e-003, 6.090635e-002, 3.623918e-002, 3.963604e-003, 7.379674e-004, 4.428040e-002, 3.642056e-002, -1.110374e-002, 1.889869e-002, -4.062550e-002, -1.126478e-002, -5.351298e-002, -3.612345e-002, -2.675817e-002, 1.816300e-002, -


© ISO/IEC 2004 — All rights reserved

Copyright International Organization for Standardization
Provided by IHS under license with ISO
No reproduction or networking permitted without license from IHS
Not for Resale

5.498115e-003, 8.853826e-003, -4.587636e-003, -2.642608e-002, 1.072292e-002, -1.195956e-002, 2.314990e-002, -1.470243e-002, -1.120294e-002, 1.508882e-003, -1.389083e-002, 1.008230e-003, -2.403283e-002, -4.402135e-002, -2.972674e-002, -5.906760e-003, -3.542620e-002, 2.256660e-002, 7.603651e-003, -1.657294e-002, 8.218504e-003, -3.742804e-003, 8.076105e-003, 1.561635e-002, -7.054368e-003, 3.853741e-002, -1.921355e-002, 5.219380e-003, -6.033073e-003, 3.204478e-002, -3.788914e-002, 2.054825e-002, -3.554147e-003, -4.232238e-005, 3.919383e-002, -5.690090e-002, 1.446398e-002, 5.194108e-002, 1.804638e-002, 1.250799e-002, -1.496303e-002, -1.229762e-002, -2.266452e-002, 5.480818e-003, -9.790454e-003, -8.761127e-002, -6.216335e-003, 5.005640e-003, 7.274581e-002, -1.033139e-002, 2.570279e-002, 1.860913e-002, 2.909876e-002, 5.424296e-003, 1.939541e-002, 1.215145e-002, 3.738713e-004, 4.232859e-002, 3.049875e-002, 4.343301e-002, -1.810103e-002, -9.424252e-004, 1.095567e-002, -3.883626e-003, 1.792971e-002, -1.105752e-002, 2.480581e-002, 3.135173e-002, 2.677042e-003, 4.815548e-003, 5.554097e-002, -1.646308e-002, 3.784271e-002, 4.522667e-002, 1.346108e-002, 9.383537e-003, 3.551905e-002, 2.458387e-002, 3.135434e-002, 1.177972e-002, 7.377768e-002, -6.038665e-003, 5.581597e-004, -1.862859e-002, -3.533538e-002, -2.838318e-004, -1.878576e-002, -2.972641e-002, -4.897153e-002, -1.170962e-002, -1.017877e-002, -2.634327e-002, -3.618787e-002, 3.894539e-002, 3.555236e-002, 2.900139e-002, 4.651183e-002, 3.837879e-002, 2.891099e-002, 9.816838e-003, 1.926955e-002, 3.640326e-003, -4.614522e-003, 4.908436e-002, -3.272019e-002, -9.361488e-003, -1.671577e-002, 4.581447e-002, -8.239546e-003, -1.829753e-002, -6.654082e-003, 2.576997e-002, 2.741530e-003, 2.201054e-003, 4.571313e-002, 4.796405e-002, 4.276536e-002, 6.442902e-002, 4.558753e-002, 2.715025e-002, 3.289049e-002, 1.272832e-002, 2.913709e-002, 9.161952e-003, 2.198060e-002, -2.383899e-002, 1.304803e-002, 1.663143e-002, -1.871940e-002, 1.262981e-002, -3.846050e-002, -2.641917e-002, -7.109628e-002, -3.872483e-002, 2.582151e-002, 4.510568e-002, 2.179159e-002, 2.402862e-002, 3.166501e-002, 3.970847e-002, 2.687890e-002, 2.183302e-002, 2.022948e-002, 2.030758e-002, 2.360387e-002, 2.596476e-002, 2.974038e-002, -2.081103e-004, 2.504442e-002, 3.071238e-002, -4.340694e-002, -5.601989e-003, 4.220637e-002, -7.138191e-003, 5.760388e-003, 3.512852e-002, 9.064508e-002, 2.313748e-002, 2.312179e-002, 3.407875e-002, 4.330360e-002, 7.976891e-003, 1.747120e-002, 2.700015e-002, 1.933303e-002, 4.331669e-003, 1.725383e-002, 2.595972e-002, 6.158864e-002, 3.584613e-002, 4.175016e-002, -1.596179e-002, -2.933943e-002, 1.701436e-002, 4.028324e-003, -4.460789e-002, -4.544918e-002, -4.334710e-002, 2.005628e-002, 1.387086e-002, 1.229041e-002, 4.279518e-002, 2.884573e-002, 1.969430e-002, 2.999278e-002, 1.286591e-002, 1.757813e-002, 2.666089e-002, 9.795578e-003, 9.059526e-003, 4.169162e-003, 3.932901e-003, 7.011157e-003, -2.408159e-002, -3.474872e-002, -1.513367e-002, 7.681458e-002, 1.878220e-003, 1.749515e-002, -5.590164e-003, 1.326724e-002, 1.542466e-002, 1.542466e-002, 1.326724e-002, -5.590164e-003, 1.749515e-002, 1.878220e-003, 7.241433e-002, -7.149507e-002, -3.194265e-002, 2.011723e-003, -4.303260e-002, -4.923218e-002, -5.440731e-002, -5.464765e-002, -6.478500e-002, -1.286433e-002, -5.021395e-002, -6.591654e-002, 5.538173e-002, 2.404699e-002, -4.269625e-002, -2.099222e-002, -2.529489e-002, -3.426352e-002, -3.079793e-002, -3.258698e-002, -2.289873e-003, -1.095544e-002, -9.668319e-002, -3.540494e-002, 5.118870e-002, 5.628367e-002, 1.823346e-002, 1.238131e-002, -5.614937e-003, -7.738858e-004, -2.122785e-002, -7.330264e-002, -1.223635e-001, -7.756478e-002, -6.993216e-002, 1.949296e-002, 3.419930e-002, 3.469370e-002, 2.717496e-002, 2.157961e-003, -4.147574e-003, -1.272694e-002, -6.191636e-002, -1.299304e-001, -2.959011e-002, -3.362310e-002, -6.020500e-003, 3.104538e-002, 4.834247e-002, 3.085515e-002, 5.414710e-003, 3.193375e-003, -5.520540e-003, -3.189912e-002, -7.229283e-002, -1.054447e-002, -7.474233e-003, 3.109318e-002, 2.468616e-002, 2.663235e-002, 2.266391e-002, 2.707738e-003, 8.601087e-004, -5.632511e-004, -2.439164e-002, -6.041400e-002, 5.739698e-002, 5.425265e-004, 4.186660e-002, -1.839485e-002, 1.356806e-002, 2.522936e-002, 2.522936e-002, 1.356806e-002, -1.839485e-002, 4.186660e-002, 5.425265e-004, -5.688455e-003, -7.938345e-003, 1.522485e-004, -5.493908e-002, -3.663109e-002, -2.168399e-002, -4.105064e-002, -4.887179e-002, -1.124425e-002, -4.225158e-002, -3.451193e-002, -3.957006e-002, -2.587830e-002, 1.242894e-002, -1.287456e-002, -2.283285e-002, 1.638540e-003, 3.382704e-003, -4.234041e-002, -8.748353e-002, -1.968277e-002, 4.015483e-002, -6.080502e-002, -8.137879e-003, -3.747774e-002, -5.542376e-004, -2.069396e-003, -6.050174e-003, -1.595775e-002, 9.938503e-003, 3.886475e-002, 5.033206e-002, 4.980346e-002, 2.909984e-002, -7.810572e-002, -4.375816e-002, -4.534220e-004, 7.951490e-003, 3.362757e-003, 9.400242e-003, 1.085299e-002, 3.367639e-002, 3.275496e-002, -5.266294e-003, -2.225880e-002, -7.971687e-002, -1.920415e-002, 3.489406e-003, 4.097375e-003, 5.799924e-003, 2.095096e-002, 2.458265e-002, 1.496454e-002, 1.213837e-002, -1.632785e-002, -1.260161e-002, -3.375890e-002, -1.959059e-002, 2.623409e-003, 8.393169e-004, 4.335339e-003, 1.024489e-002, 9.509595e-003, 2.863820e-002, 2.203610e-002, -1.280348e-002, -5.877166e-002, 8.143225e-003, 6.677536e-003, 7.436294e-003, 1.664412e-002, 2.728536e-003, 2.728536e-003, 1.664412e-002, 7.436294e-003, 6.677536e-003, 8.143225e-003, 2.131142e-002, 2.641390e-002, 8.320898e-002, 2.180083e-002, 9.108085e-003, 1.731106e-002, 2.260053e-003, -2.768039e-002, 4.719741e-002, 5.633246e-002, -2.625012e-004, 3.423671e-002, 2.152902e-002, 3.102496e-003, 6.351927e-003, -1.026807e-003, 1.282014e-002, 7.847553e-003, 4.972305e-002, 9.840846e-004, -2.127843e-002, 1.024434e-002, -1.007821e-003,

© ISO/IEC 2004 — All rights reserved


Copyright International Organization for Standardization
Provided by IHS under license with ISO
No reproduction or networking permitted without license from IHS
Not for Resale

8.088526e-003, 2.727010e-002, -1.096933e-002, -1.151811e-003, 5.157531e-003, -8.266273e-003, -1.780695e-002, -3.037972e-002, -1.047411e-001, 6.740452e-002, -8.259047e-002, 6.537294e-002, 3.386275e-002, 2.806757e-002, 1.538923e-003, 5.402808e-003, 7.974263e-003, 3.221695e-003, 5.497612e-003, -1.546753e-002, -5.605317e-003, 3.796172e-002, 4.304501e-002, 4.072248e-002, 1.820662e-002, 2.154669e-002, 1.737624e-002, 1.082636e-002, 9.343295e-003, 4.632463e-004, -2.099067e-003, -6.611780e-003, 8.907677e-003, 9.033315e-003, 3.709329e-002, 1.294294e-002, 1.753172e-002, 1.602402e-002, 1.281882e-002, 3.183374e-003, -4.707193e-003, -6.229253e-003, 1.893271e-002, -4.926538e-002, -3.444597e-003, -2.972419e-002, 8.040801e-003, -1.694224e-002, 3.556641e-002, 3.556641e-002, -1.694224e-002, 8.040801e-003, -2.972419e-002, -3.444597e-003, 4.387155e-002, -1.213345e-002, -5.677830e-002, 1.237779e-003, -1.748410e-002, 2.323423e-002, 3.580576e-002, 5.961991e-002, 1.288925e-001, 1.885037e-002, 4.262859e-002, 7.083630e-004, 5.293744e-003, 2.690551e-003, -3.100877e-002, 1.442367e-002, -1.123199e-002, 1.258517e-002, 2.371226e-002, 2.010899e-002, 2.216329e-002, 1.793592e-002, 1.114026e-002, -3.802117e-003, -1.369195e-001, -1.505606e-002, -2.802436e-002, -2.447327e-002, 2.644696e-002, 1.672835e-002, 1.576357e-002, 4.591744e-002, 1.857988e-002, 2.035003e-003, -1.002494e-002, -1.026806e-002, 6.840737e-003, 5.019128e-004, 6.289213e-003, 1.916187e-002, 2.407674e-002, 2.715408e-002, 5.601721e-002, 7.096272e-002, 6.577512e-002, -1.891517e-002, 1.650978e-003, 1.868732e-004, 4.797786e-003, 5.824822e-003, 2.445885e-002, 1.512597e-002, 2.188990e-002, 4.612206e-002, 3.003259e-002, 3.317898e-002, 1.379065e-002, -8.999565e-003, -6.254057e-003, -1.544664e-003, 5.886834e-003, 1.231030e-002, 9.653371e-003, 2.139989e-002, 1.502085e-002, 2.153659e-002, -9.407220e-002, -4.428678e-002, -4.769961e-002, -4.769961e-002, -4.428678e-002, 4.384277e-002, 1.141962e-001, -6.160526e-003, -9.882385e-003, -7.038824e-003, 9.923298e-004, -8.396711e-003, 2.847006e-002, -3.466362e-003, 2.513720e-003, 8.481643e-002, -4.734013e-002, -2.351097e-002, -2.351097e-002, -4.734013e-002, -1.101401e-001, -2.013101e-002, -1.492236e-002, -1.215511e-002, -2.138168e-002, 8.693930e-004, 2.323396e-003, 5.167649e-003, -3.352591e-003, -7.621463e-003, 2.444110e-002, -5.911867e-002, -2.828476e-002, -2.828476e-002, -5.911867e-002, -3.599902e-002, -2.528377e-002, -1.407326e-002, -3.048486e-002, -6.083607e-002, 5.555422e-002, -4.991532e-003, -2.082645e-003, -5.853646e-003, -2.985081e-003, -6.440416e-002, -6.708185e-002, -8.938074e-002, -8.938074e-002, -6.708185e-002, 1.186125e-002, 1.336808e-002, 9.562559e-003, -1.698915e-002, 1.258736e-001, -1.360042e-002, 4.151395e-003, 6.282448e-003, 2.986617e-002, 1.878567e-002, -6.916680e-002, 2.130980e-002, 3.496837e-002, 3.496837e-002, 2.130980e-002, -1.233939e-001, -5.767907e-002, -9.946146e-003, -1.417172e-002, -5.366097e-002, -3.777902e-002, -1.724582e-002, -1.580673e-003, -4.986125e-003, -2.501327e-002, 1.552372e-001, 1.109456e-002, -1.289575e-002, -1.289575e-002, 1.109456e-002, 9.041530e-002, -2.019626e-002, -6.797670e-004, -2.573684e-002, -8.946792e-003, -1.281143e-001, -1.783129e-002, 6.546739e-003, -3.731418e-003, -5.857494e-002, 1.041463e-001, 4.663808e-002, -2.348594e-002, -2.348594e-002, 4.663808e-002, 5.741655e-002, 2.734846e-002, -7.157156e-004, 2.159708e-003, 3.136948e-002, -7.799029e-002, -2.925499e-002, -1.045243e-003, 9.328601e-003, -6.354119e-003, -6.786304e-003, -6.234591e-003, 5.901870e-002, 5.901870e-002, -6.234591e-003, -1.532740e-001, -5.246063e-002, -1.710425e-002, -3.092369e-002, -1.033444e-001, -6.092291e-002, -2.713146e-002, -6.234674e-003, 2.822674e-004, -1.846771e-002, 6.172854e-002, -3.466571e-002, 1.573441e-002, 1.573441e-002, -3.466571e-002, 2.789389e-002, 2.157856e-002, 1.522300e-002, 3.716257e-003, 9.061913e-003, 1.939960e-002, 2.071431e-002, 1.051527e-002, -1.194450e-003, 1.159072e-002, -1.453512e-001, -1.249525e-002, 7.719457e-003, 7.719457e-003, -1.249525e-002, -3.372121e-002, 2.141900e-002, 1.676124e-002, 4.260642e-003, -1.338488e-002, -3.555227e-002, 2.909051e-002, 1.186257e-002, 7.756865e-003, -1.683145e-002, -5.952110e-002, -1.306835e-002, 1.586290e-002, 1.586290e-002, -1.306835e-002, -2.083927e-002, -8.647216e-004, 7.254891e-003, 1.983341e-002, 3.036639e-002, -1.820212e-002, -1.912161e-002, 5.145856e-003, 1.493334e-002, 3.097810e-002, 6.160015e-002, 6.248443e-002, 3.057957e-002, 3.057957e-002, 6.248443e-002, 2.335486e-002, 1.235714e-002, -1.237349e-002, 1.656893e-002, 2.294704e-002, 1.888365e-002, 9.299179e-003, 6.747110e-004, 1.200213e-002, 2.031912e-002, -1.196583e-002, -2.159066e-003, -2.134028e-002, -2.134028e-002, -2.159066e-003, 4.805340e-002, -8.443718e-003, -9.141336e-003, 1.829365e-002, 5.130857e-002, -9.023997e-003, 1.902663e-002, -4.698907e-003, 7.205225e-003, -1.138925e-003, 3.681683e-002, -5.012625e-002, -1.471206e-002, -1.471206e-002, -5.012625e-002, 9.965198e-002, 1.073697e-002, 6.783027e-003, 4.170023e-003, -1.195344e-002, 1.558175e-003, 1.204635e-002, 1.039616e-002, 4.973103e-003, -6.731741e-004, -3.789012e-002, 2.646285e-002, 6.602241e-003, 6.602241e-003, 2.646285e-002, 7.757465e-002, -4.392671e-002, -1.190666e-002, 1.931157e-003, 8.106963e-003, 3.750271e-002, -2.015192e-002, -2.398160e-003, 4.811327e-003, 9.495516e-003, -1.345431e-002, 2.892266e-002, -7.022447e-005, -7.022447e-005, 2.892266e-002, -3.759010e-002, 2.328716e-002, 1.155415e-002, 8.106052e-003, -3.667659e-002, -1.110830e-003, -5.991318e-003, 1.983781e-003, 7.197470e-003, 1.895494e-002},
{-1.501017e-002, 3.489809e-003, -1.805682e-002, -9.380689e-003, 4.709658e-003, 2.131219e-002, -4.928904e-003, 7.447844e-003, 1.223375e-003, -1.407230e-002, 1.439876e-003, 9.512781e-003, 1.439876e-003, -1.407230e-002, 1.223375e-003, 7.447844e-003, -4.928904e-003, 2.131219e-002, 4.709658e-003, -9.380689e-003, -1.805682e-002, 3.489809e-003, -1.030923e-003, -1.076428e-003, -


© ISO/IEC 2004 — All rights reserved

Copyright International Organization for Standardization
Provided by IHS under license with ISO
No reproduction or networking permitted without license from IHS
Not for Resale

2.785524e-002, -3.425484e-004, -6.589426e-003, 1.945056e-003, -1.659959e-003, -4.638410e-003, 1.323231e-002, -2.310813e-002, 2.261635e-002, -4.210757e-002, -2.154451e-002, 7.027470e-003, -1.760299e-002, -4.196064e-002, -2.197907e-002, -1.835972e-003, -1.834634e-002, -1.116418e-002, -1.605239e-002, -4.127199e-003, -3.721898e-002, -2.972362e-003, -1.044582e-003, 1.646932e-002, 1.704873e-002, -7.038931e-004, 2.824334e-003, -3.840916e-002, 1.260931e-002, 3.925719e-002, -3.661247e-002, -2.145394e-002, 1.887210e-003, -3.930663e-002, 1.398111e-002, -4.996358e-002, -1.287181e-002, -2.085828e-002, -3.413682e-003, 2.579004e-002, 5.410744e-003, -1.005289e-002, 2.284359e-002, -1.478803e-002, 6.411065e-003, 1.659702e-002, -1.539510e-003, -1.795756e-002, -4.535043e-002, 1.903563e-002, -2.805943e-002, 2.820806e-002, -3.192405e-003, 2.380773e-002, 1.880647e-002, -2.424718e-003, -1.797700e-002, -6.472955e-002, 5.245877e-003, -2.540844e-002, -9.650846e-003, 3.278756e-002, 6.668893e-003, -1.383165e-002, 1.983792e-002, 1.570903e-002, -1.622103e-002, -6.870786e-003, 9.236497e-003, -1.560437e-002, -2.024010e-002, 6.389763e-003, 1.729894e-002, 3.216197e-002, 2.324362e-002, -1.362589e-002, -6.820073e-004, 3.633579e-002, -3.674756e-002, -1.376345e-002, -2.400946e-002, -1.505329e-002, -2.096889e-002, -1.118150e-002, 1.131228e-002, -1.265955e-002, -1.882148e-002, 5.174315e-003, -2.626954e-003, -2.604634e-002, -5.404222e-002, -3.325995e-002, 1.367619e-003, 1.937570e-002, 1.727604e-002, 2.372177e-002, 3.429492e-002, 2.562052e-002, 1.367235e-002, 3.087872e-002, -2.872154e-003, 5.275301e-003, -5.336912e-002, -4.548329e-002, -4.460355e-002, 5.331093e-003, 3.886109e-004, -2.338719e-004, 3.803355e-003, 3.052040e-002, -3.977875e-003, -3.469483e-002, -3.102123e-002, -4.028897e-002, -5.928200e-003, 5.690245e-002, -8.967384e-003, 1.630004e-002, 3.623953e-002, 3.998315e-002, 1.492912e-002, -5.137261e-002, -4.081905e-002, -5.345461e-003, 1.014663e-002, -3.737060e-003, 3.262405e-002, -3.573596e-002, -3.075743e-002, 4.040369e-002, -1.262571e-002, -1.588864e-002, 4.344378e-002, 1.539003e-002, -4.304330e-004, 3.331336e-002, -6.815631e-002, 2.662459e-003, 1.744783e-002, 7.768683e-003, 1.211509e-002, 8.519374e-003, 1.763673e-002, 1.507312e-003, -5.514779e-003, -1.179843e-003, -3.951260e-002, -3.482431e-003, -4.139547e-003, 1.661669e-002, 2.833915e-002, -4.189744e-003, 6.798941e-004, -1.313148e-002, -3.381632e-002, 6.045553e-003, 3.734214e-002, 2.845885e-002, -2.615229e-002, -2.569220e-002, -1.593041e-002, -1.705701e-002, -6.891283e-004, -8.779705e-003, -2.561508e-003, 1.932825e-002, 1.174187e-002, -1.924554e-002, -1.153048e-002, -1.278339e-002, -1.276500e-002, -4.042490e-002, 2.480510e-003, 6.258803e-003, -3.059957e-002, -1.820540e-003, 3.184825e-004, -4.386616e-002, 4.760777e-003, 6.994453e-002, -1.795850e-002, 1.201007e-002, -1.521065e-002, -3.515880e-003, 1.249315e-003, 1.897801e-003, 1.581910e-003, 1.011700e-002, 7.660630e-003, -4.264365e-003, -4.748047e-002, -8.986828e-003, -6.696410e-002, -3.645694e-002, -3.066227e-002, 3.404618e-002, 2.850482e-002, 1.408319e-002, 2.064958e-002, 1.571285e-002, -2.637997e-002, 2.228037e-002, -4.740188e-002, -1.589678e-002, 3.289401e-004, 2.163172e-002, 1.686781e-002, 3.000115e-002, 2.419745e-002, 1.692220e-002, 4.280756e-003, 1.448661e-003, -1.858295e-002, -1.065535e-002, -4.078542e-002, 1.380523e-002, -5.638028e-002, 3.134217e-002, 8.759504e-003, -2.389343e-002, -1.608095e-002, -3.590559e-002, -7.013329e-002, -7.675172e-003, -2.291969e-002, 7.177872e-003, 1.087686e-002, 5.487735e-003, 2.425408e-002, 4.909173e-003, 1.322033e-002, -7.673159e-003, 4.640367e-004, -1.780695e-002, 1.871569e-002, -3.128672e-003, -1.103579e-001, -6.068284e-002, -2.298101e-002, -3.525059e-002, -2.190056e-002, 3.559837e-003, -1.110915e-002, -3.904320e-003, -4.336108e-002, -8.919543e-005, -1.758867e-002, -1.955693e-003, 3.164043e-003, 4.160572e-003, 3.062905e-003, 2.091173e-004, 3.103702e-004, -3.582832e-003, 6.273906e-003, -3.537329e-003, -4.316101e-002, -3.316907e-002, -3.304235e-002, -4.376554e-002, 4.215406e-002, 5.935873e-003, -3.312047e-002, 3.290953e-002, 2.066799e-002, -1.990634e-003, -5.455124e-002, -4.778712e-002, -2.563961e-002, -6.663658e-003, -3.584845e-003, -7.233109e-005, -2.387648e-003, 1.130078e-002, -3.509765e-003, -4.394350e-003, 3.234481e-003, 4.101754e-003, -1.732641e-002, -2.392840e-002, -2.515874e-002, 1.755674e-002, 2.103398e-002, -1.472591e-002, 5.661843e-002, -3.373724e-002, 7.003423e-003, -1.601946e-002, 2.688310e-003, 3.236868e-003, 3.236868e-003, 2.688310e-003, -1.601946e-002, 7.003423e-003, -3.373724e-002, -2.565132e-002, 3.199690e-002, 3.591427e-002, -4.831765e-002, 5.163757e-003, 3.115751e-002, -2.693651e-002, -2.044010e-002, 1.742721e-002, -2.129812e-002, -7.541617e-002, -3.150161e-003, -2.888015e-002, 2.560369e-002, 8.077565e-002, 9.750065e-003, 9.090316e-003, -6.065978e-003, -1.992661e-002, -1.512404e-002, -3.171979e-002, -1.045420e-001, -2.977980e-002, 5.076429e-003, 2.915863e-002, -7.187843e-003, 4.065907e-003, 5.691076e-003, -7.123467e-003, -1.537645e-002, -3.240220e-002, -7.356602e-002, -2.212919e-001, -3.557744e-002, 7.812105e-002, 6.635989e-002, -9.859290e-003, -1.834600e-002, -6.929244e-003, -1.069497e-002, -1.807992e-002, -2.389703e-002, -4.166908e-002, -6.200359e-002, -8.869649e-002, -5.327819e-002, 1.955172e-002, -7.025904e-003, -1.064990e-002, 2.906512e-003, -1.014596e-002, -1.838072e-002, -1.629955e-002, -2.781250e-002, -5.126699e-002, -2.226453e-002, -2.409895e-002, -1.480845e-002, -3.125604e-003, 4.418536e-003, -3.154885e-004, -5.397238e-003, -1.299604e-002, -1.519731e-002, -1.117960e-002, -1.946111e-002, 1.847290e-002, -2.553038e-002, -3.193204e-002, -2.791210e-002, 1.904609e-002, 5.595343e-003, 5.595343e-003, 1.904609e-002, -2.791210e-002, -3.193204e-002, -2.553038e-002, -2.863388e-002, -6.616493e-002, -2.381115e-002, -9.859881e-002, -3.452505e-002, -1.299196e-002, 4.248247e-002, 6.245112e-002, -5.493452e-002, 6.668629e-002, -8.842526e-003, 9.540570e-003, -

© ISO/IEC 2004 — All rights reserved


Copyright International Organization for Standardization
Provided by IHS under license with ISO
No reproduction or networking permitted without license from IHS
Not for Resale

1.209927e-001, 2.777999e-002, -1.399885e-002, -5.823125e-003, 7.645247e-003, 2.329138e-002, 4.799993e-003, 6.263271e-002, 7.321112e-002, -2.543044e-002, -3.907332e-002, -1.700760e-001, -5.352876e-002, -1.003060e-002, -1.754602e-002, -2.523168e-003, -7.326765e-004, -1.610838e-002, 1.208905e-002, 1.025873e-001, -2.045623e-003, -5.274153e-002, -9.090915e-002, -4.052642e-002, -2.194874e-002, -2.117766e-002, -7.530040e-003, -3.603228e-003, -1.921221e-003, -6.012185e-003, 2.252796e-002, 3.380468e-002, -8.496717e-002, -6.542689e-002, -1.526265e-002, -1.767133e-002, -1.620424e-002, -6.824904e-003, 7.059546e-003, 4.893382e-003, -2.144465e-003, -1.609512e-003, -6.779560e-002, 2.941829e-002, -5.114767e-003, -1.084779e-002, -7.369964e-003, -5.792677e-003, -4.725309e-003, -1.154741e-003, 6.744878e-003, -2.102465e-002, -2.675596e-002, -9.432754e-003, -5.104853e-002, -1.137503e-002, -3.925588e-002, -1.369624e-002, -1.885708e-002, 9.083298e-003, 9.083298e-003, -1.885708e-002, -1.369624e-002, -3.925588e-002, -1.137503e-002, -5.165902e-003, -2.954192e-002, -2.840392e-002, 2.657988e-002, -1.511198e-002, 4.718588e-003, 9.693978e-003, -3.911320e-002, 3.121880e-002, 9.970570e-004, 5.301148e-002, -5.474456e-004, -5.697621e-002, 4.614262e-002, 2.567139e-002, 6.360316e-003, 9.942908e-003, 2.671213e-002, 3.452503e-002, -5.419136e-003, -6.961012e-002, -2.992037e-002, 3.760861e-002, 5.575610e-003, 3.132453e-002, 2.376240e-002, 2.058372e-003, 1.590170e-002, 2.014198e-002, -7.102334e-003, 1.326805e-002, 1.578948e-002, 1.882037e-002, -7.819812e-003, -5.449381e-002, 4.707298e-003, 3.161800e-003, 7.637017e-003, 8.812916e-003, 1.186515e-002, 4.749419e-003, -1.614063e-002, -2.018968e-002, -3.988861e-002, 1.840120e-002, 4.041178e-003, -1.880168e-002, -3.120783e-004, 3.046082e-005, 1.141967e-002, 5.936033e-003, 2.282146e-003, 9.579858e-004, -1.021101e-003, 1.138897e-002, 1.067476e-002, -2.078225e-002, -6.438648e-003, -2.643123e-003, -8.037674e-004, 2.143865e-003, -2.166636e-003, -2.556832e-003, -9.757111e-003, -1.071129e-002, -1.606980e-002, -3.905298e-002, -8.522973e-003, -3.095155e-002, -1.879204e-002, -2.629765e-002, -1.760913e-002, -1.760913e-002, -2.629765e-002, -1.879204e-002, -3.095155e-002, -8.522973e-003, -3.830461e-002, 9.228006e-003, -4.162497e-003, -5.794633e-003, 1.368213e-002, 4.557631e-003, -5.544431e-003, -1.363536e-002, -4.494079e-003, 1.191965e-002, -8.480526e-002, -7.226586e-003, -4.723340e-002, -5.396351e-002, 3.711489e-002, 3.419548e-002, 2.799268e-002, 1.983585e-003, 1.092732e-003, -7.393397e-003, 6.603539e-003, -2.244028e-002, 4.142592e-002, -3.315714e-003, -2.397788e-002, -1.637925e-002, 2.669566e-002, 3.151785e-002, 7.203370e-003, -4.108228e-003, -1.210903e-002, -3.058425e-002, 2.943134e-002, 3.320172e-002, -5.834761e-002, -3.449825e-002, -8.348594e-003, -8.097479e-003, 3.411589e-003, 1.563043e-003, -9.429075e-003, -2.498606e-002, -2.293130e-002, -3.989174e-002, 2.943399e-002, 3.736032e-003, 2.794881e-004, -6.049458e-003, 9.979352e-003, 3.257070e-003, 6.635779e-003, -5.885467e-003, -2.407720e-003, -7.038833e-003, 1.432112e-002, -1.015625e-002, -6.633790e-003, -5.984126e-003, -1.028186e-002, -1.632778e-003, -3.799040e-003, 1.983271e-003, -2.096452e-003, -1.390045e-002, -1.115177e-002, -3.240638e-002, -3.803121e-002, 1.838769e-002, 1.490021e-002, 1.490021e-002, 1.838769e-002, 6.875095e-003, 1.235554e-002, 2.294914e-002, 4.322849e-003, 2.193508e-002, 1.335136e-002, 4.644187e-002, 1.495593e-003, -1.102250e-003, 3.564151e-003, -8.824348e-002, -1.015903e-001, -4.863894e-002, -4.863894e-002, -1.015903e-001, 1.716990e-001, 4.164665e-002, 5.602665e-003, 1.251892e-003, 5.113229e-003, 5.914517e-002, 5.019766e-002, 9.520508e-003, 1.571858e-003, -3.433276e-003, -4.485212e-002, -6.217519e-002, -2.794311e-002, -2.794311e-002, -6.217519e-002, 8.479976e-002, 6.655433e-003, 4.237222e-003, -1.526041e-003, 1.965814e-003, 1.998279e-003, 1.539638e-003, 2.070987e-003, 3.866988e-003, 1.172130e-002, 1.453112e-002, 1.766321e-002, 2.587253e-003, 2.587253e-003, 1.766321e-002, 4.238453e-002, 2.417875e-002, 1.098509e-002, 2.882823e-002, 5.884804e-002, 4.913487e-003, 3.003818e-003, 6.133088e-004, 1.287499e-002, 3.280196e-002, 3.172255e-002, 1.596748e-002, 1.441262e-002, 1.441262e-002, 1.596748e-002, -1.586049e-002, 1.510463e-002, 1.858710e-003, -2.495616e-002, -2.854065e-002, -6.166883e-003, -8.313314e-003, -8.181694e-003, -1.208298e-002, -7.946600e-003, 1.511706e-001, -1.653377e-002, -3.652778e-002, -3.652778e-002, -1.653377e-002, -1.738992e-001, -2.440659e-003, -1.594170e-002, -2.381666e-002, -5.545435e-002, -1.395744e-001, -2.814217e-002, -1.482779e-002, -1.136403e-002, -5.386240e-002, -1.685079e-002, -1.517479e-003, -3.249003e-002, -3.249003e-002, -1.517479e-003, -1.522234e-001, -5.751171e-002, -2.857068e-002, -7.728087e-003, 3.428544e-003, -1.166729e-001, -5.183311e-002, -1.168897e-002, -1.043815e-002, -2.145357e-002, 6.564470e-002, 4.980518e-002, 5.500177e-002, 5.500177e-002, 4.980518e-002, 1.535268e-002, -2.391338e-002, -1.014025e-003, 2.183066e-002, 1.730250e-002, 6.055959e-003, -1.400049e-002, -1.422603e-002, -7.940149e-003, -1.058235e-002, 5.893035e-002, 5.650603e-002, 7.697051e-003, 7.697051e-003, 5.650603e-002, -3.165416e-002, -1.307543e-002, -4.728301e-003, 9.592813e-003, -5.198422e-003, -1.373150e-002, -4.679285e-003, -4.813690e-003, 2.388998e-003, -7.616222e-003, -2.597599e-001, -9.759865e-002, -2.060302e-002, -2.060302e-002, -9.759865e-002, 2.744885e-002, -2.868187e-002, -1.117737e-002, -1.589791e-002, -1.628552e-002, -1.803379e-003, -4.023924e-003, -9.053755e-003, -8.453451e-003, -1.358750e-002, -1.267951e-001, -3.043237e-002, 1.671793e-002, 1.671793e-002, -3.043237e-002, 1.485555e-002, -3.406943e-002, -1.678364e-002, -1.287976e-002, -2.400132e-002, 5.009632e-003, -1.591869e-002, -7.006143e-003, -1.016001e-002, 2.443058e-003, 6.543807e-002, 2.770479e-002, -6.048907e-003, -6.048907e-003, 2.770479e-002, -3.100078e-002, -2.000102e-003, 9.525908e-003, -9.367739e-003, -1.653828e-002, -3.138158e-002, -


© ISO/IEC 2004 — All rights reserved

Copyright International Organization for Standardization
Provided by IHS under license with ISO
No reproduction or networking permitted without license from IHS
Not for Resale

2.205264e-002, -1.916772e-003, -6.293694e-003, -1.562564e-002, 4.796439e-002, 6.420630e-002, -1.332261e-002, -1.332261e-002, 6.420630e-002, -7.185270e-002, 4.078391e-002, 1.634634e-002, -6.242580e-003, -3.289992e-002, -1.845756e-002, -2.530581e-003, 1.585753e-002, 3.252295e-003, 7.670258e-003, 1.018166e-001, 2.057354e-002, 1.851305e-002, 1.851305e-002, 2.057354e-002, -4.899985e-002, 3.730670e-003, 2.775024e-003, 5.845008e-003, -1.421443e-002, -1.196733e-002, -3.232964e-003, 2.951161e-003, 1.694314e-003, 3.828222e-003, 1.455519e-003, 7.504776e-002, 2.987338e-002, 2.987338e-002, 7.504776e-002, -5.907977e-002, -3.458520e-002, -7.189878e-003, -6.548641e-003, -7.114722e-003, -7.265180e-003, -9.947660e-003, 1.893657e-003, -3.177775e-003, -7.067299e-003, 2.084856e-002, 4.056730e-002, 5.333609e-002, 5.333609e-002, 4.056730e-002, 3.306952e-002, -1.416547e-002, 2.315836e-002, 2.492708e-002, 2.537754e-002, 3.160066e-002, 7.986163e-003, 8.946042e-003, 1.310244e-002, 1.302123e-003},
{-1.861969e-003, -1.759066e-002, -1.604873e-002, 2.046921e-002, 8.594267e-004, 8.015425e-003, -2.726835e-003, -4.762866e-003, 1.322400e-002, -4.917423e-003, 1.261617e-002, 9.887063e-004, 1.261617e-002, -4.917423e-003, 1.322400e-002, -4.762866e-003, -2.726835e-003, 8.015425e-003, 8.594267e-004, 2.046921e-002, -1.604873e-002, -1.759066e-002, -5.835473e-002, 2.871091e-002, 2.152547e-002, 2.303882e-002, 2.330978e-002, -4.539466e-003, -1.656086e-002, -2.198486e-002, -2.597465e-002, 5.056104e-002, -6.944576e-003, -4.689393e-003, -6.147396e-003, 1.165857e-002, -3.142223e-002, 4.283001e-002, -1.113817e-002, -1.018111e-002, 2.378661e-002, 6.430775e-003, 3.036791e-002, 1.579512e-002, 1.496773e-002, 2.742831e-002, -1.337937e-002, 5.327328e-002, -1.674346e-002, 1.026173e-002, -1.783846e-002, -1.368077e-002, -1.388985e-002, -7.255983e-004, 9.544015e-002, 5.178552e-002, 3.373599e-002, 2.525062e-002, -2.548372e-002, 4.589163e-002, 5.056314e-004, 3.184791e-002, 1.428873e-002, 3.214183e-002, -1.591036e-002, 5.288123e-002, -2.325058e-002, 3.243361e-002, -7.472326e-003, -9.137408e-004, -1.605314e-002, -1.401768e-002, -6.715956e-003, -2.131624e-002, -1.571151e-002, 8.633653e-003, 1.946498e-002, 4.204846e-003, 5.539978e-002, -5.281340e-003, -1.323775e-002, 5.056387e-005, -3.633686e-002, -4.263731e-002, 7.662876e-003, -3.767424e-002, 5.293271e-004, 3.332391e-002, -6.698540e-003, 3.637099e-002, 5.091851e-002, 3.587855e-002, 1.241374e-002, -1.285438e-002, -9.089222e-003, -3.610644e-002, -1.048994e-002, 5.120327e-002, 6.860080e-003, -6.133018e-002, -4.431877e-002, 1.569096e-002, 1.698774e-002, 4.988978e-003, -1.456886e-002, -2.798186e-002, 6.797452e-003, 3.523984e-002, 6.050221e-002, 7.976616e-003, -2.982561e-002, 2.160884e-002, -2.826492e-002, 1.733047e-002, -3.399296e-003, -2.957023e-002, 1.427593e-002, 5.657726e-002, 1.577891e-002, -6.493544e-003, -1.110185e-002, -1.102013e-002, 1.385359e-003, 6.084904e-002, 2.620446e-002, 1.138089e-002, -2.286544e-003, -9.879992e-003, 1.721967e-002, 3.536213e-003, -7.582246e-003, 1.010531e-002, -8.941156e-003, 1.392842e-002, -1.159993e-002, 1.086441e-003, -1.878574e-002, -3.710688e-002, -3.772716e-002, 2.669865e-002, 2.167775e-002, -8.734801e-004, -3.094814e-002, 1.156680e-002, -2.640746e-002, -1.353717e-002, 6.028164e-002, -2.075134e-002, 4.425419e-002, -2.028588e-002, -4.058404e-002, 7.049083e-003, 2.925713e-003, 6.724711e-004, 1.425632e-002, 2.922617e-002, 4.487094e-003, 1.994108e-002, 3.255514e-002, -2.404225e-002, 4.546437e-002, 1.424395e-002, -2.642864e-003, -7.822233e-003, 2.004153e-002, 1.035935e-002, 4.025536e-003, 1.336204e-002, 4.172660e-003, 1.837519e-002, 1.775737e-002, -1.107322e-002, 1.632422e-002, -5.678606e-002, 1.473556e-002, 3.677218e-003, 3.432431e-002, 1.855051e-002, -1.291142e-002, 1.939401e-002, -8.220422e-003, -1.524480e-002, -2.971078e-002, -3.741408e-003, -1.458087e-002, 2.735418e-002, 7.963924e-003, -4.201761e-003, 8.019901e-003, -4.815269e-003, 1.024544e-002, -1.376562e-002, -1.363397e-002, -2.764505e-002, -6.368526e-003, 4.587748e-003, 4.998329e-002, 2.855425e-002, -1.725606e-002, 4.097904e-002, 5.372262e-002, -3.399319e-003, -2.998458e-002, -4.428199e-002, -1.392661e-002, 5.076470e-004, 8.957904e-003, -3.055998e-003, 4.571350e-003, 5.467529e-003, 8.217001e-003, 5.481728e-003, -2.926897e-002, -3.159099e-002, -1.291263e-002, 3.305609e-003, 4.472559e-002, 2.315690e-002, 2.221966e-003, 4.393126e-002, 9.474898e-003, 3.645506e-002, -4.767549e-002, -1.599567e-003, 8.281904e-003, 1.190434e-002, 4.858847e-002, -4.826596e-003, -4.184428e-003, 2.707950e-003, 5.791696e-004, 8.748839e-003, 6.573141e-003, 6.586352e-003, -1.375794e-003, 1.131491e-002, -5.982974e-003, -2.139166e-002, -5.839656e-003, -2.931061e-002, -3.621203e-002, -6.184036e-003, 8.667778e-003, 1.596292e-002, 2.215294e-002, -2.760986e-002, -1.701808e-002, 1.594001e-002, -1.235178e-003, -2.472258e-003, 1.001533e-002, 2.145914e-003, -9.248146e-003, 9.638936e-003, 1.463043e-003, 6.216495e-004, -2.220205e-002, -8.154646e-003, -1.847105e-002, -1.109632e-002, 8.855159e-003, -6.630278e-002, -3.222400e-002, 6.453458e-002, 3.759767e-003, 6.158570e-002, 3.513095e-002, -7.103905e-002, 1.400037e-003, 1.340529e-002, 1.189526e-004, 2.423384e-002, 1.194433e-002, -2.761467e-003, 1.573261e-003, 5.080269e-003, -2.302244e-003, -7.938913e-003, -6.055741e-004, 5.472336e-003, 1.142670e-002, 2.376332e-002, -5.480460e-003, -6.734922e-002, 4.072034e-002, 1.384607e-002, 1.049598e-002, 7.282197e-002, -3.408208e-002, 4.825200e-003, -1.493776e-002, 8.481463e-003, 2.653095e-002, 1.202268e-002, 4.227443e-003, 1.215672e-003, -1.870135e-003, 8.874699e-003, 7.280915e-004, 4.473010e-003, -8.534381e-003, -9.282987e-003, -7.168544e-003, -1.748414e-002, -2.807816e-003, -4.757732e-003, 1.795644e-002, 6.333265e-002, 1.212857e-002, -1.135223e-003, 9.161476e-004, -1.754244e-002, -4.553331e-002, -5.011205e-002, -5.011205e-002, -4.553331e-002, -1.754244e-002, 9.161476e-004, -1.135223e-003, 5.733931e-002, -

© ISO/IEC 2004 — All rights reserved


--`,,```,,,,````-`-`,,`,,`,`,,`---

Copyright International Organization for Standardization
Provided by IHS under license with ISO
No reproduction or networking permitted without license from IHS
Not for Resale

2.197549e-002, -8.422136e-003, 1.035932e-001, 7.320366e-002, 4.607821e-002, -3.884934e-002, -9.278138e-002, -5.408804e-002, -5.708007e-002, -6.791732e-002, -3.701623e-002, 9.300771e-003, 2.621124e-004, 2.756108e-002, 3.134380e-002, 2.315410e-002, -1.223253e-002, -2.357225e-002, -2.377973e-002, -1.951791e-005, -9.488466e-003, -4.095125e-002, -1.383729e-002, 2.613208e-002, 5.366275e-002, 3.974636e-002, 2.093596e-002, 4.953135e-003, 8.935465e-003, -1.381661e-002, 1.157876e-003, 8.770805e-002, -6.545509e-003, -1.006169e-002, 4.632990e-002, -9.606236e-003, 1.052478e-003, 1.610742e-002, 2.279366e-003, 8.233696e-003, -1.221645e-003, 1.398152e-002, -3.148249e-002, -1.312552e-002, 3.385138e-002, 1.836580e-002, 1.406757e-002, 1.169782e-002, 1.503289e-003, -7.754732e-004, 3.229294e-003, -4.740756e-003, -9.215454e-003, 2.335102e-002, -4.972732e-004, 1.842220e-002, -2.310557e-003, 1.127283e-002, 6.683492e-003, -5.764065e-004, 7.351743e-004, -2.432589e-003, -1.105578e-003, -3.342668e-003, 3.561571e-002, -2.417429e-002, -2.403309e-003, -8.936408e-003, -1.972685e-003, -3.770474e-002, -6.891579e-002, -6.891579e-002, -3.770474e-002, -1.972685e-003, -8.936408e-003, -2.403309e-003, 5.386681e-002, -2.949495e-002, -9.104779e-002, 2.197473e-002, -1.776503e-002, -9.507142e-004, 6.001138e-002, 3.942564e-002, 5.116695e-002, -9.185261e-002, -2.867180e-002, -4.867038e-002, -6.421978e-002, -1.251815e-002, -4.753554e-003, -3.482227e-002, -2.286009e-004, 1.631541e-002, -3.137457e-003, -6.218407e-002, 7.793438e-002, -1.889022e-002, -2.845788e-002, 6.557563e-002, 2.299076e-002, -2.612726e-003, 8.628548e-004, 8.988145e-003, 1.823362e-002, 6.206123e-002, 8.106283e-002, 1.109510e-001, -3.851915e-002, 6.148332e-002, -3.330956e-002, 6.323538e-003, 4.899137e-003, 8.264299e-003, 3.294607e-003, 1.171331e-002, 6.470912e-003, 3.855963e-002, 7.131009e-002, 4.753069e-002, 2.665398e-002, 2.349880e-002, -5.005753e-003, 7.441674e-003, 6.862144e-003, 1.849027e-003, 1.839943e-002, 1.489190e-002, 3.038037e-002, 2.813589e-002, 3.538213e-002, 1.307841e-002, 2.709688e-002, 5.560480e-003, 3.381746e-003, -6.096831e-004, 2.843472e-003, 1.303164e-002, -8.158677e-004, 2.379599e-002, 1.669977e-002, -1.235482e-002, -5.191307e-003, 1.870288e-002, -2.614996e-002, 1.603228e-002, -3.715645e-003, 1.792154e-002, 1.792154e-002, -3.715645e-003, 1.603228e-002, -2.614996e-002, 1.870288e-002, 3.824983e-003, -4.903047e-002, -4.333200e-002, 1.177371e-002, -3.976349e-002, -1.872792e-002, -1.695884e-002, -8.410543e-002, -5.930428e-003, 1.762813e-002, -8.603517e-003, -1.393480e-002, -1.178276e-001, -5.147499e-002, -2.858927e-002, -1.377545e-002, -2.635217e-003, -1.370033e-002, 3.892845e-002, 1.051241e-002, 1.424570e-002, -4.248237e-002, -1.221472e-002, 4.343293e-004, 3.970699e-003, -2.409607e-002, -1.592528e-002, -3.771042e-003, -6.542090e-003, -4.663901e-003, -3.641885e-002, -5.642992e-002, 2.252988e-002, -6.057641e-002, -1.676612e-004, 6.242825e-003, -5.147425e-003, -1.077281e-002, -1.332920e-003, -2.962014e-003, -1.087782e-002, -3.656178e-002, -3.519821e-002, -9.110055e-003, 2.759418e-003, -3.142491e-002, 7.454665e-003, 5.990468e-003, -1.516613e-003, -1.413369e-002, -6.790703e-003, -1.773988e-002, -2.908740e-002, -1.960240e-002, -2.535968e-002, 8.184288e-003, 3.388380e-004, -8.097439e-003, 6.754191e-003, 7.423168e-003, -2.189154e-003, -1.063089e-002, -5.786662e-003, -9.512694e-003, -2.483377e-002, -1.017053e-002, 1.537506e-002, 5.251302e-003, -3.372517e-002, 2.665244e-002, 1.759830e-002, 3.148840e-002, 3.148840e-002, 1.759830e-002, 2.665244e-002, -3.372517e-002, 5.251302e-003, -1.574196e-002, 1.992319e-002, 4.614727e-002, -4.204825e-002, -2.795142e-002, -1.843732e-002, 2.014193e-003, 1.335477e-002, -1.272186e-002, -6.529664e-002, -2.403724e-002, 2.436179e-002, 4.938447e-003, 3.012418e-002, -1.037433e-002, -2.148403e-002, -3.398760e-002, -1.604809e-002, -1.696584e-002, -5.480288e-002, -5.220861e-003, -4.734635e-002, 5.884448e-002, 4.178220e-002, 3.909726e-002, -2.520525e-002, -1.378655e-002, -3.148738e-003, -2.766064e-003, -8.027650e-003, -5.320969e-003, 8.327345e-003, 7.765179e-003, -8.353238e-002, 2.703412e-002, -5.885125e-003, -1.884030e-002, 3.160260e-003, -8.484356e-004, -1.341805e-002, -1.194569e-002, -5.839312e-003, -7.021892e-003, 1.033945e-002, -1.968705e-002, -2.326983e-003, -1.565946e-002, -8.233378e-003, 2.267570e-004, 2.861487e-003, -2.456031e-003, -8.307389e-003, -3.776133e-003, 4.393339e-004, -4.347875e-002, 2.245962e-002, -7.978048e-003, -5.173662e-003, -6.643417e-003, -1.358833e-005, -1.351451e-003, 2.837660e-003, -1.915116e-003, -2.725775e-003, 3.951851e-003, 9.232647e-003, 4.806910e-002, 5.287244e-003, -5.269135e-002, -5.269135e-002, 5.287244e-003, -1.238730e-001, 5.920526e-002, 7.269813e-002, -1.370547e-002, 1.790750e-002, -5.250885e-002, 2.744098e-002, 6.898349e-003, -2.212374e-003, 1.713945e-002, 8.855298e-002, 6.530204e-002, 3.145213e-002, 3.145213e-002, 6.530204e-002, -2.780719e-001, -4.264173e-002, -1.388099e-002, -1.600932e-002, -3.254180e-002, -5.746443e-002, -1.778934e-002, 2.915112e-003, -5.657422e-003, -1.199773e-002, 8.786699e-002, 8.500496e-002, 2.639698e-002, 2.639698e-002, 8.500496e-002, -1.723098e-001, -1.520116e-002, -1.148807e-002, -1.099995e-002, 3.144206e-002, 1.359031e-002, -1.354963e-002, -7.542452e-003, 1.705142e-004, 1.792328e-002, 1.183022e-001, 1.560261e-002, -4.281165e-002, -4.281165e-002, 1.560261e-002, -1.605270e-001, 1.689051e-002, 4.930692e-003, 4.808658e-002, 2.880453e-002, -5.666418e-002, 2.280055e-002, 6.160666e-003, 2.547461e-002, 5.229480e-002, -1.439890e-003, 8.032257e-003, 3.684924e-002, 3.684924e-002, 8.032257e-003, 1.301510e-001, 5.955554e-003, -3.851876e-003, 7.713587e-003, -1.992547e-003, 3.299547e-002, -9.338785e-003, 5.397390e-003, 8.074192e-003, -1.302611e-003, -1.230536e-001, 2.036435e-003, -8.002804e-003, -8.002804e-003, 2.036435e-003, 1.439377e-001, 2.809770e-002, 1.042585e-002, -2.273688e-004, 3.781956e-002, 2.844640e-002, -2.090112e-003, 1.122811e-003,


© ISO/IEC 2004 — All rights reserved

Copyright International Organization for Standardization
Provided by IHS under license with ISO
No reproduction or networking permitted without license from IHS
Not for Resale

5.778336e-003, 3.182969e-003, -2.061280e-001, 1.921065e-002, 3.361832e-002, 3.361832e-002, 1.921065e-002, 1.600622e-001, 1.316590e-002, 4.848999e-003, -5.244755e-004, 1.382739e-002, 4.094685e-002, 1.050551e-002, 5.622854e-004, 3.673317e-003, 7.869552e-003, -2.421546e-002, -1.427087e-002, 3.330289e-002, 3.330289e-002, -1.427087e-002, 9.432408e-002, -4.185027e-002, -1.212051e-002, -2.922820e-002, -5.448820e-002, 2.449426e-002, -1.097904e-004, 4.067394e-003, 1.248773e-003, 1.142434e-004, -4.737026e-002, 1.784846e-002, -3.265263e-002, -3.265263e-002, 1.784846e-002, 4.777874e-002, 1.010243e-002, -1.297699e-002, 1.043467e-002, 3.797670e-002, 1.674119e-002, 5.851597e-003, -1.627449e-003, -3.698749e-003, 5.875144e-003, 4.866500e-002, -3.379428e-002, 3.901236e-003, 3.901236e-003, -3.379428e-002, -1.212462e-002, -1.301115e-002, 4.705977e-003, 2.161782e-003, 1.098853e-002, -8.208430e-003, 5.992941e-003, 4.158884e-004, 2.844901e-003, -3.594440e-003, 4.022319e-002, 1.466527e-002, 2.823371e-002, 2.823371e-002, 1.466527e-002, 4.203962e-003, 3.142540e-002, 6.642439e-003, 8.055524e-004, -7.114181e-003, 1.450120e-003, 6.641692e-003, 1.109655e-003, 2.248077e-003, 1.013251e-002, 1.652419e-002, 4.161066e-002, -4.024164e-002, -4.024164e-002, 4.161066e-002, 4.982886e-002, 3.090496e-002, -2.672852e-003, -8.842742e-003, -1.138637e-002, 1.684120e-002, 4.305327e-003, -3.742773e-004, -4.156726e-003, 3.910410e-003, -5.513018e-002, 3.388669e-002, 4.778428e-002, 4.778428e-002, 3.388669e-002, 2.249019e-002, 8.415646e-003, -2.204169e-002, -1.253569e-002, -3.797040e-002, -4.744277e-003, 6.668118e-003, -8.250144e-003, -1.801626e-002, -1.054915e-002, 4.864413e-002, 8.027855e-002, 2.335951e-002, 2.335951e-002, 8.027855e-002, -1.998851e-002, -4.463313e-003, -2.421781e-003, 1.504758e-002, 3.961899e-002, -2.740088e-002, 6.644321e-003, -3.070720e-003, -7.164017e-003, -1.607852e-002, 7.869014e-002, 4.021933e-002, 1.661479e-002, 1.661479e-002, 4.021933e-002, 1.229467e-002, 4.396716e-002, 9.548921e-003, 4.958822e-003, 1.422949e-002, -2.587701e-002, 7.718577e-003, 7.011605e-003, 1.496684e-003, 5.034837e-003, -1.200625e-001, 2.781092e-002, 3.839393e-002, 3.839393e-002, 2.781092e-002, -5.125568e-002, -6.856476e-002, -2.589672e-002, -2.554649e-002, -1.627744e-002, -4.618532e-002, -1.373218e-002, -9.776077e-003, -1.320435e-002, -1.768386e-002},
{-7.090624e-003, -7.465957e-003, -2.625747e-003, 1.093340e-002, -5.272080e-003, -8.415313e-003, 1.680760e-002, -9.553068e-003, 1.561961e-002, 2.687262e-002, 1.396162e-004, 7.571067e-002, 1.396162e-004, 2.687262e-002, 1.561961e-002, -9.553068e-003, 1.680760e-002, -8.415313e-003, -5.272080e-003, 1.093340e-002, -2.625747e-003, -7.465957e-003, -2.614163e-002, -1.499731e-003, 2.318068e-002, 2.890295e-003, 4.556415e-003, -1.666148e-002, -1.011548e-002, -1.259187e-002, -3.170564e-002, -7.315979e-004, -3.847492e-002, -4.263615e-002, -2.301304e-002, 1.296599e-002, -1.983215e-002, 2.992648e-003, 3.362621e-002, -1.987099e-002, -6.719068e-004, 2.567713e-003, 1.149187e-002, 3.263703e-003, -2.309712e-002, 2.042053e-002, 1.761336e-002, 1.972483e-002, -2.817402e-002, -3.663218e-002, -2.880269e-002, -7.418050e-004, -1.126585e-002, 1.917752e-002, -5.571268e-003, -3.464848e-002, 4.702281e-002, -3.342353e-002, 8.913970e-003, 4.687977e-004, 9.837748e-003, 3.233701e-003, -1.929559e-002, -2.255790e-003, 1.814629e-002, 1.848371e-002, 1.272590e-002, 5.577914e-003, 1.009885e-002, 1.899654e-002, 2.382469e-002, 1.631625e-002, -2.709276e-002, 8.715178e-003, 1.718567e-002, -6.809170e-003, -2.383804e-002, -4.488887e-002, 3.857816e-003, 8.684101e-003, 7.127918e-003, -1.596184e-002, -1.203831e-002, -2.047852e-002, -5.614346e-003, -1.054436e-002, 1.464377e-002, 3.297149e-002, -1.458636e-002, 5.060306e-004, 4.676390e-002, 4.777497e-003, -6.710930e-003, 2.629682e-002, -2.271215e-002, -4.102174e-002, -5.108696e-002, -3.369635e-002, -3.806356e-002, -3.439231e-002, -2.824100e-002, -1.485995e-002, 1.520090e-002, -1.928947e-002, -4.101648e-002, -6.591954e-003, 1.446413e-002, 2.096815e-003, 7.744484e-003, 2.782073e-002, -1.146245e-002, 2.280313e-002, -1.077439e-002, -1.757614e-004, 1.849373e-002, -3.773335e-002, -2.651480e-002, 3.112912e-002, 1.575747e-003, -1.329587e-002, -1.725543e-005, 2.002170e-002, -1.572329e-002, 3.356004e-002, 2.182193e-002, -3.857809e-002, -5.189255e-002, 5.952152e-003, -5.717119e-003, 3.898131e-002, 4.010576e-002, 2.565645e-002, 2.241530e-002, -5.424025e-003, 3.044871e-002, -1.804494e-002, -9.451467e-003, 4.665449e-002, -1.509866e-002, -2.183736e-002, 1.497793e-002, 1.212364e-002, 5.415507e-002, 2.853522e-002, 3.269175e-002, 7.632992e-003, 3.494851e-002, 5.286549e-003, -1.690956e-002, 8.145959e-003, 1.716083e-003, 1.341085e-003, -1.528829e-002, 1.522184e-004, -9.227169e-003, 3.846822e-002, 3.340891e-003, 2.594521e-002, -6.007356e-005, 3.248895e-002, 1.862588e-002, 1.963477e-003, 8.998601e-003, 1.815725e-002, 1.919667e-003, 1.237868e-002, 9.256015e-003, 1.238696e-002, -2.361801e-003, 5.311134e-002, -7.075999e-003, -5.791348e-003, -2.734256e-002, 1.934645e-002, 2.196055e-002, -9.637677e-003, 2.271258e-002, 2.542827e-002, 2.010865e-002, -4.816919e-003, -2.627646e-002, -3.186362e-002, 2.719488e-002, 4.182439e-003, 2.387102e-002, 1.047454e-003, 8.041282e-003, -1.320632e-002, -6.483493e-003, 3.274975e-003, -1.015512e-002, 1.660042e-002, 9.155161e-003, 9.931999e-003, 4.430684e-002, -4.602444e-002, 3.383645e-002, 1.877445e-002, -3.159019e-002, 2.052769e-002, -1.165608e-002, -5.951158e-002, 3.062702e-003, 1.639169e-003, 4.694194e-002, -6.693526e-003, 4.290947e-003, 1.497558e-003, -1.739982e-004, -9.331057e-004, -1.610353e-002, 1.199625e-002, -8.753882e-003, -2.191268e-002, 4.997766e-003, -6.439118e-002, 7.432119e-002, -1.235086e-002, -4.028732e-002, 2.128546e-002, -2.174574e-002, -2.795216e-003, -2.156264e-002, -5.443831e-002, -3.487189e-002, 2.700568e-002, -6.136241e-003, -2.852138e-003, 6.459750e-003, -1.112845e-002, -2.572549e-002, 6.520206e-003,

© ISO/IEC 2004 — All rights reserved


--`,,```,,,,````-`-`,,`,,`,`,,`---

Copyright International Organization for Standardization
Provided by IHS under license with ISO
No reproduction or networking permitted without license from IHS
Not for Resale

2.608120e-002, 2.271105e-002, 1.710382e-002, 8.477769e-003, 1.378323e-002, -2.102523e-002, -4.551119e-002, 8.521618e-003, -3.056846e-002, 2.670629e-002, -4.794652e-002, 5.553894e-002, 1.316952e-002, -4.900428e-003, 2.337498e-002, 1.969101e-002, 7.614100e-003, 9.180210e-003, -4.246277e-003, -3.215003e-002, -6.531782e-003, -3.846625e-003, -7.731308e-003, -6.156920e-003, -1.733166e-002, 9.244753e-004, 1.075768e-002, 1.792343e-002, -4.971459e-003, 2.123518e-002, 9.281481e-002, 3.432757e-002, -5.946153e-002, 2.774535e-002, 2.031377e-002, 1.357584e-002, 2.695179e-003, 4.648245e-003, 1.016943e-002, -8.320030e-003, -1.523132e-002, -4.168720e-003, -9.837757e-003, 7.241428e-004, -1.108993e-002, -4.600451e-003, -7.589102e-003, -3.434360e-003, -4.718779e-003, -2.264437e-002, 1.024459e-003, -1.106042e-002, 7.215919e-002, 5.973064e-002, -4.711454e-003, -4.165466e-002, 1.364071e-002, 2.490708e-002, 6.452942e-003, 2.538232e-002, 7.089878e-003, 5.520987e-003, 4.393666e-004, -4.583222e-003, -2.604897e-003, 1.269262e-003, -3.792845e-003, -6.863271e-003, 4.200000e-003, 6.529750e-003, 1.987517e-004, 9.935417e-003, 1.050755e-002, 4.720859e-002, 3.357430e-002, 3.967774e-002, 4.099322e-002, -1.009199e-002, 1.298041e-002, -3.668667e-003, -3.003616e-003, -2.895360e-002, -2.895360e-002, -3.003616e-003, -3.668667e-003, 1.298041e-002, -1.009199e-002, -6.978344e-002, -4.737249e-004, 5.422391e-003, 3.317187e-002, 1.848276e-002, 1.036393e-002, 9.567980e-004, -2.422895e-002, -9.228357e-003, 3.549338e-002, -1.392132e-002, -3.440941e-002, 3.882496e-003, 2.744429e-002, 1.199103e-001, 1.886567e-002, 9.938730e-003, 2.347208e-002, 2.371587e-002, 9.845134e-003, 1.043767e-002, -6.137819e-002, 9.153436e-002, -1.007780e-002, -2.932580e-002, -3.211451e-002, -3.910936e-003, 1.642478e-002, 3.463286e-003, 7.548578e-003, 3.367392e-003, -1.859161e-002, -5.621832e-003, 2.474043e-002, 2.920537e-002, -1.047854e-002, -1.442896e-002, 3.875561e-003, -5.889420e-003, -5.331949e-003, -8.685449e-004, 7.726503e-004, -2.372524e-003, -3.769582e-002, -5.944311e-002, -5.246368e-002, -8.695325e-003, 2.613461e-003, -7.650813e-003, -1.215839e-002, -2.655666e-004, -1.038891e-003, 3.216656e-003, -2.655090e-003, -3.279474e-002, -3.369269e-002, -3.402093e-002, 9.774228e-003, 8.842313e-003, -7.397035e-003, -1.340274e-002, 2.684945e-003, 1.309907e-003, 2.232828e-003, 3.143083e-003, 3.621340e-003, 3.668485e-002, 6.475039e-003, -3.708720e-002, 9.932534e-003, -2.491939e-002, -1.386373e-002, -1.386373e-002, -2.491939e-002, 9.932534e-003, -3.708720e-002, 6.475039e-003, -5.553663e-002, -3.882165e-002, -2.804523e-002, -9.788815e-002, -6.437367e-002, -2.356220e-002, 2.762600e-002, 7.970685e-002, -5.380741e-002, 4.888160e-002, 3.020919e-002, -4.696909e-003, -4.284840e-002, 7.310931e-002, 4.409741e-002, 2.228393e-002, 2.687661e-002, 2.075658e-002, 1.686205e-002, 8.182746e-002, -4.599013e-002, 3.731461e-002, -2.392455e-002, -5.012522e-002, 2.217315e-002, 1.495364e-002, 7.007445e-003, 3.923259e-003, 1.317369e-002, 1.961826e-002, -5.095386e-003, -4.633550e-004, -4.404948e-003, 1.102587e-002, -1.985895e-002, -3.457181e-003, 1.939828e-002, -1.993322e-003, 2.781957e-004, -1.599085e-003, 1.281887e-003, -2.858945e-003, 5.217794e-004, 2.620879e-002, -3.162884e-002, -2.623351e-002, -8.716515e-004, 1.754677e-003, -3.845746e-003, -4.581536e-003, 8.757333e-004, 1.347281e-003, 6.583285e-003, 5.616183e-003, -1.752564e-002, -2.338009e-003, -1.012840e-002, 1.456873e-002, 6.367235e-003, 9.967414e-005, -4.146792e-003, -6.712275e-003, 1.577697e-003, 1.137225e-004, 9.955284e-003, 9.682701e-004, -4.669090e-002, 1.256054e-002, -2.556328e-002, -2.735146e-002, -2.837622e-002, -5.153173e-003, -5.153173e-003, -2.837622e-002, -2.735146e-002, -2.556328e-002, 1.256054e-002, 2.004398e-002, 2.699361e-002, 5.587125e-002, 3.497934e-002, 7.344139e-003, 1.193301e-002, -1.221408e-002, 2.163606e-002, -3.922353e-002, -3.815614e-002, -1.658677e-002, 5.659446e-002, -1.161909e-002, 2.185285e-002, 5.117999e-002, 2.254977e-002, 2.385201e-002, -1.448696e-002, -1.587334e-002, -4.110358e-003, 3.277235e-002, -5.959566e-002, -2.345996e-002, -5.899681e-002, 2.082670e-002, 4.620193e-002, 1.357139e-002, 1.146618e-002, -2.034262e-003, -4.892079e-003, -3.901755e-002, -3.467851e-002, 1.136371e-003, 3.269315e-002, -1.697064e-002, -1.356780e-002, 2.298844e-002, 2.124816e-002, 1.302362e-002, -1.123576e-003, -2.763128e-003, -1.525521e-003, 1.302831e-002, -6.128583e-002, 7.536483e-002, -1.190151e-002, -1.121525e-002, -1.191965e-003, 4.233614e-003, 5.854743e-003, -4.340786e-003, -1.290018e-003, -2.279405e-003, 2.243702e-003, -6.183055e-003, 3.576415e-002, 1.465351e-002, 4.991139e-003, 2.497733e-003, 3.660269e-003, 2.501513e-003, -6.191016e-003, -4.869284e-003, -4.402990e-003, 5.783605e-003, 1.582067e-002, -3.807778e-002, 7.602348e-003, -4.324579e-003, -1.079698e-002, -1.616413e-002, 2.672050e-003, 2.672050e-003, -1.616413e-002, -1.079698e-002, -4.324579e-003, 7.602348e-003, 3.923082e-002, -3.024633e-002, -5.638371e-002, -1.531603e-002, -1.492020e-002, -2.049303e-002, -2.224452e-002, -3.466362e-002, -2.083068e-002, 5.188883e-002, 9.863828e-003, 9.843656e-002, -5.610166e-002, 2.348600e-002, -3.473518e-002, -4.168990e-002, -5.605949e-003, 1.634913e-002, 3.157108e-002, 4.232888e-002, 9.180975e-002, 6.483611e-003, 6.622368e-002, -5.357796e-002, -2.126234e-002, -2.575271e-002, 7.404688e-003, -8.114041e-003, 4.040467e-003, 1.698917e-002, 3.739919e-002, -8.160227e-003, -5.783867e-002, 1.059576e-002, -5.061869e-002, -2.995777e-002, 1.671877e-002, -4.413908e-003, 3.889744e-003, 1.045931e-002, 1.247093e-002, 1.694893e-002, 8.897506e-003, -2.648076e-002, 7.569768e-002, -1.449915e-002, -1.079386e-003, 4.048936e-003, 4.540250e-003, -6.585291e-003, 8.868942e-003, 3.669315e-003, 5.981273e-004, 2.050125e-003, -1.855345e-002, 5.363237e-002, 6.182994e-003, 1.337675e-002, 7.581377e-003, 8.580396e-004, -5.811185e-003, 2.797307e-003, -1.900267e-003, -4.124709e-003, 7.102153e-003, -1.096837e-002, -


© ISO/IEC 2004 — All rights reserved

Copyright International Organization for Standardization
Provided by IHS under license with ISO
No reproduction or networking permitted without license from IHS
Not for Resale

7.646408e-002, 3.564048e-002, 4.162951e-002, 4.162951e-002, 3.564048e-002, 6.048788e-002, -1.966618e-002, 1.673809e-002, 6.486119e-003, 2.017354e-002, 2.890555e-002, 7.367336e-003, -1.514741e-002, -2.937399e-003, 1.010098e-003, -2.680715e-002, -4.413238e-002, -2.085703e-002, -2.085703e-002, -4.413238e-002, 3.845377e-001, 1.455983e-002, 1.532388e-002, 8.116190e-003, 2.095086e-002, 9.247086e-002, 2.381858e-002, -8.325879e-004, 4.396901e-003, 2.023544e-003, -7.150195e-003, -6.242211e-002, -1.733490e-002, -1.733490e-002, -6.242211e-002, 2.775111e-001, 1.748722e-002, 1.891280e-002, 8.916108e-003, 1.265306e-002, 6.230472e-002, 1.237565e-002, 7.806848e-003, 3.709498e-003, 1.351739e-002, -1.052393e-001, 4.878617e-002, 7.480390e-002, 7.480390e-002, 4.878617e-002, 6.907448e-002, -6.339948e-003, -4.240748e-003, 4.724801e-003, -5.837977e-002, 2.198125e-002, -4.315647e-003, -2.112624e-003, -9.980071e-003, -8.056082e-003, 2.497769e-002, -6.818347e-003, 1.197229e-002, 1.197229e-002, -6.818347e-003, -2.514299e-002, 1.916714e-002, 4.702166e-003, -1.845049e-002, -2.173632e-002, -1.393547e-002, -7.152915e-003, 1.613749e-003, -9.836996e-003, -2.843986e-003, 1.192868e-001, 1.039573e-001, 2.673465e-002, 2.673465e-002, 1.039573e-001, -1.147477e-001, 9.500540e-003, 7.224191e-003, 5.607017e-003, 1.168362e-002, -6.642874e-002, -1.953144e-002, 7.209050e-003, 4.516961e-003, -1.916134e-002, 1.345506e-001, 1.576535e-001, 2.169517e-002, 2.169517e-002, 1.576535e-001, -1.488865e-001, 3.678107e-002, 7.095381e-003, 1.438621e-002, 4.930898e-002, -6.020610e-002, -1.073587e-002, 4.278109e-003, 4.904428e-003, -1.791307e-002, 1.452371e-002, -4.455193e-003, -1.125450e-002, -1.125450e-002, -4.455193e-003, -2.955318e-002, 1.090805e-002, -1.616776e-002, 4.373310e-002, 3.807567e-002, -5.844574e-003, 3.521023e-003, -6.023995e-003, 1.154363e-002, 8.792131e-003, -8.471171e-003, 3.452537e-002, 1.937373e-003, 1.937373e-003, 3.452537e-002, -3.022636e-002, -1.095132e-002, 1.967173e-003, -2.359205e-002, -6.259744e-003, -1.287406e-002, -8.753498e-003, -2.934618e-003, -4.952618e-003, -8.888565e-003, -9.414789e-003, 1.940285e-003, 2.652911e-002, 2.652911e-002, 1.940285e-003, 1.305663e-001, 4.316174e-002, 1.312845e-002, 1.293176e-002, 1.902195e-002, -2.978886e-002, 1.909805e-002, 2.782399e-003, 1.178842e-003, -1.384508e-002, 1.910059e-002, 1.706790e-002, 3.286777e-002, 3.286777e-002, 1.706790e-002, 1.428128e-001, 2.036096e-002, 1.137599e-002, 1.886860e-002, 5.312772e-002, -2.622897e-002, -1.802167e-002, 4.042371e-003, -4.826134e-004, 2.691298e-002, -4.746357e-003, 1.708047e-002, -1.613579e-003, -1.613579e-003, 1.708047e-002, 6.309650e-004, 1.011656e-003, -2.179826e-002, 3.156513e-003, -5.409242e-003, -4.207175e-003, -7.675712e-003, -6.483043e-004, -3.610030e-003, -1.044391e-002, 1.939113e-002, 2.369632e-002, 1.464696e-002, 1.464696e-002, 2.369632e-002, -2.588369e-002, -1.330315e-002, 9.597095e-003, 1.700681e-003, -1.346747e-002, 3.028542e-002, -1.479005e-002, 1.003052e-002, 3.757749e-003, 4.136504e-003, -4.819607e-002, 4.013383e-002, 2.486568e-002, 2.486568e-002, 4.013383e-002, -9.824229e-004, 5.491735e-003, 4.711510e-003, -8.294307e-003, -2.507124e-002, 2.917934e-002, 4.130677e-003, 5.068234e-003, -7.007741e-003, -7.974324e-003, -7.779574e-002, 6.289586e-002, 4.348144e-002, 4.348144e-002, 6.289586e-002, 2.278911e-002, -1.616950e-002, -4.314687e-003, 5.825097e-003, 4.487284e-003, 3.011642e-002, -7.777565e-003, 5.706987e-003, 7.128323e-003, 1.166730e-002, 2.536372e-002, 1.561058e-003, 3.489789e-002, 3.489789e-002, 1.561058e-003, -2.687965e-002, -6.894855e-002, -4.153657e-002, -1.561073e-002, -2.302562e-002, 9.172552e-003, -6.995329e-003, -7.255178e-003, 8.171114e-003, -2.213217e-002},
{-2.028578e-002, 1.564591e-002, 2.819529e-003, -1.563422e-002, -2.751133e-003, 7.991245e-003, 1.566464e-003, -1.946148e-002, 2.334102e-002, 9.666403e-003, -1.374800e-002, 5.902832e-003, -1.374800e-002, 9.666403e-003, 2.334102e-002, -1.946148e-002, 1.566464e-003, 7.991245e-003, -2.751133e-003, -1.563422e-002, 2.819529e-003, 1.564591e-002, 5.136900e-003, -1.227943e-002, -7.226576e-004, 1.267124e-002, -4.167504e-002, 1.523701e-002, -1.209004e-002, -2.811210e-002, 2.190400e-003, -2.597066e-002, 1.769574e-002, 7.165250e-003, -5.410146e-002, 4.814069e-003, 7.724347e-003, -2.239361e-002, -4.344377e-003, -2.873076e-003, -3.127313e-002, 5.454770e-004, -1.165884e-002, -2.630048e-003, 1.439135e-002, 4.231004e-003, 1.161972e-002, 9.003301e-004, -1.231873e-002, 1.631574e-002, -2.477625e-002, -1.063812e-002, -3.090431e-002, 1.021105e-002, 2.608967e-003, 3.146355e-002, 2.966738e-002, -5.064394e-003, -3.303435e-002, -1.632572e-002, -1.243912e-002, 6.906832e-004, -8.393480e-004, -6.841521e-003, -1.546048e-002, -6.801648e-004, 1.934368e-002, 6.333632e-003, 2.137777e-004, -7.437536e-003, 2.549813e-002, 1.136166e-002, -7.380165e-003, -3.854824e-003, 9.319635e-004, -2.122681e-002, -4.205238e-002, 3.545421e-003, 2.543235e-002, 8.931363e-003, 4.081225e-003, -8.423131e-003, 1.933435e-002, 4.641226e-003, 3.150982e-002, -1.897772e-003, 2.623080e-002, -6.156651e-005, 1.874611e-002, 1.388090e-002, -3.219970e-002, -1.131838e-002, 2.764807e-003, 1.849881e-002, 1.478318e-002, 5.930452e-003, 4.477071e-002, 1.247448e-002, 1.492719e-002, 5.145329e-002, 2.353367e-002, 1.644646e-002, 1.741744e-002, -1.334224e-002, -7.549081e-003, -4.822244e-003, 4.182452e-003, 1.078684e-002, -2.259091e-002, 1.955416e-002, 1.429462e-002, -1.778451e-003, 2.190448e-002, -1.712164e-003, -8.360983e-004, -2.223758e-002, 1.909034e-002, 5.022892e-002, 3.710992e-002, 1.967241e-002, -1.372543e-002, 1.056716e-003, 3.308354e-002, 1.694409e-002, 3.919463e-002, 1.816559e-002, 6.027649e-004, -1.980394e-002, 5.630313e-003, 3.151830e-002, 9.677003e-003, 1.103938e-002, 1.687926e-003, -3.878271e-004, -2.320249e-002, 1.211158e-002, 3.188271e-002, -6.977429e-003, 1.767952e-002, 9.842029e-003, 1.757050e-002, 9.782833e-003, -6.442498e-003, -1.732599e-002, -

© ISO/IEC 2004 — All rights reserved


Copyright International Organization for Standardization
Provided by IHS under license with ISO
No reproduction or networking permitted without license from IHS
Not for Resale

3.089841e-002, -2.186600e-002, -5.489208e-003, -4.195561e-002, 1.872171e-002, 5.475633e-003, 1.466539e-002, -6.890124e-003, 4.990861e-002, 3.678304e-002, -8.486639e-004, -1.488431e-002, -9.089294e-004, -2.939240e-002, 4.335528e-002, 1.673948e-003, -2.535567e-002, -5.869720e-002, -9.157756e-003, 7.538245e-003, 2.072408e-003, 2.135586e-003, -6.409186e-003, -9.670904e-003, 4.373014e-003, 1.126384e-002, 4.520912e-002, -6.203396e-002, -4.871341e-003, 4.006569e-002, -4.699238e-003, -2.139618e-002, 2.887471e-002, 1.705786e-002, 9.427690e-004, -1.707445e-002, -1.842172e-002, 4.870775e-002, 3.510392e-002, -1.606255e-002, 1.197836e-002, 5.237490e-003, 5.442689e-003, 1.294250e-002, 1.322804e-002, 2.931665e-002, 4.638573e-003, -1.139512e-002, 3.459395e-002, -3.761946e-002, 2.280280e-002, 4.581977e-002, 7.640242e-003, -3.485532e-002, 2.216337e-002, -6.142280e-003, 1.837746e-002, 3.613574e-002, -1.476052e-002, -5.499776e-002, -1.878172e-002, 2.378209e-002, 1.664732e-002, 2.497257e-003, 2.067077e-003, 1.271603e-002, 1.550939e-002, 1.406891e-002, 1.593887e-002, 2.253341e-002, -2.505068e-002, -1.662711e-002, 6.015507e-003, 3.687631e-002, 8.221381e-003, 4.460205e-002, 1.370801e-003, -2.796817e-002, 2.613549e-002, 1.258472e-002, -1.042392e-002, -5.245905e-002, 2.404831e-002, 1.902892e-002, 2.257848e-002, 2.116429e-002, 9.102309e-003, 1.240031e-003, 1.883925e-002, 2.981909e-002, -4.634088e-003, 3.528838e-003, -6.932538e-003, -2.115480e-003, 3.971944e-002, 3.381501e-002, -2.245568e-002, -1.245279e-002, -4.222938e-002, -3.840795e-002, 5.362647e-003, -5.477688e-003, 1.518973e-002, 1.202816e-003, 2.697842e-002, -8.089677e-003, 9.424865e-003, 1.571018e-002, 8.891235e-003, 9.988469e-003, 1.410747e-002, 2.062701e-002, 4.633466e-003, 3.101895e-003, -5.600865e-003, -2.636397e-002, -1.402654e-003, 1.466841e-002, 2.875308e-002, 3.265977e-002, -4.106398e-002, -4.332505e-002, 8.179456e-003, 2.895762e-002, 3.268720e-002, 8.681383e-003, -5.280580e-003, -1.275312e-002, -5.884891e-003, 3.761044e-003, 5.520359e-003, 2.845627e-003, 8.915763e-003, 5.095589e-003, -1.299851e-002, -4.335356e-003, 1.125634e-002, 9.636547e-003, -1.188905e-002, 1.226463e-002, -1.040772e-002, 3.262392e-002, -2.055075e-002, 1.761318e-002, 2.104054e-002, -7.632224e-004, -1.632212e-002, 8.984151e-003, -1.757437e-003, 1.707157e-003, -3.617804e-003, 8.014184e-003, 5.682960e-003, -8.546116e-004, 5.521598e-003, 1.180004e-002, 1.155548e-002, -3.152142e-003, 1.062263e-003, -1.457854e-002, -1.473910e-003, -1.858954e-002, -9.046545e-003, 3.219296e-002, -1.639435e-002, -5.522584e-003, 1.454655e-002, 1.404486e-002, -1.035946e-002, 4.484465e-002, 4.484465e-002, -1.035946e-002, 1.404486e-002, 1.454655e-002, -5.522584e-003, 5.566620e-002, -5.962041e-004, 9.402332e-002, -1.591079e-002, 6.332199e-002, 3.739113e-002, -2.377636e-002, -2.610367e-002, -5.390415e-002, -6.384705e-002, 8.219012e-002, 8.491881e-002, 8.554479e-002, -3.023797e-002, 4.972054e-002, 4.245916e-002, 4.335509e-003, -3.259404e-002, -4.171825e-002, -4.751404e-002, -2.855783e-002, 7.159551e-002, 3.527290e-002, 8.840872e-002, -2.727772e-002, 3.637269e-002, 3.435877e-002, 1.809367e-002, -9.432922e-003, -9.343693e-003, -2.442316e-002, -9.577723e-003, 4.088014e-002, 1.975924e-002, 1.171057e-002, 2.672150e-002, 3.397851e-002, 2.419570e-002, 2.037081e-002, 2.588282e-003, -1.970988e-003, -1.116593e-002, -1.197564e-002, 6.994916e-002, 6.778998e-003, 4.152499e-002, 1.569802e-002, 1.244617e-002, 2.154975e-002, 1.300092e-002, 1.036160e-003, -6.799076e-003, -3.702371e-003, 3.304012e-003, 1.278096e-002, -2.926809e-002, 3.247004e-002, 2.534361e-002, 8.737498e-003, 7.242771e-003, 7.639739e-003, -8.272372e-004, -4.940911e-003, -3.041009e-003, -3.831285e-003, -1.087120e-002, -3.019755e-002, -2.463354e-002, 1.300513e-002, 1.690612e-002, -2.369969e-002, 1.888207e-002, 1.888207e-002, -2.369969e-002, 1.690612e-002, 1.300513e-002, -2.463354e-002, 5.150453e-002, 5.167759e-002, -4.541426e-002, -5.874562e-002, -4.157486e-002, -1.141014e-002, 5.874603e-003, 4.250218e-002, 3.198279e-002, 2.170029e-002, -3.183199e-002, 1.430016e-001, 6.357601e-003, -6.537941e-003, -2.585397e-002, -3.580087e-002, -1.814495e-002, 2.371681e-002, 3.364184e-002, 7.466021e-002, -3.785733e-003, 5.024474e-002, -5.593848e-002, -7.498741e-004, -3.209566e-002, -1.662533e-002, 4.087027e-003, -1.297854e-003, 1.701061e-002, 2.953512e-002, 4.471429e-002, 7.933808e-003, 2.198570e-002, 2.623745e-002, 1.819354e-002, -1.263094e-002, -1.427545e-002, -8.449817e-004, 4.395016e-004, 2.468488e-002, 2.859103e-002, 2.208146e-002, 2.663681e-002, -3.438231e-003, -2.150212e-002, -3.855113e-002, 6.268937e-003, -8.014790e-003, -6.133091e-003, 1.696822e-003, 1.935973e-002, 1.772326e-002, 6.363320e-003, 4.302639e-002, 5.381231e-003, -3.320154e-002, -2.554410e-002, -4.724931e-003, -3.022444e-004, -1.115162e-003, 1.597230e-003, 1.208167e-002, 1.085765e-002, 8.494203e-003, 2.112662e-002, -7.511835e-003, 1.857603e-002, -6.745732e-003, 4.405852e-003, 1.394785e-003, 1.105405e-002, 3.912776e-002, 3.912776e-002, 1.105405e-002, 1.394785e-003, 4.405852e-003, -6.745732e-003, -3.241949e-002, -1.749119e-004, 2.771550e-002, -4.269742e-002, -3.555421e-002, -1.639804e-002, 9.155432e-003, 2.498173e-003, 3.569473e-002, -8.482890e-002, 5.712262e-004, 5.239420e-002, 6.452732e-002, 5.657127e-002, 5.012096e-003, 1.564633e-003, -2.491803e-003, 1.000379e-002, -1.540339e-002, -3.636244e-002, 2.678277e-002, 4.176833e-002, 2.274148e-002, -4.120220e-003, 3.278051e-002, 9.492992e-003, 6.268362e-003, -3.238152e-003, -1.893246e-002, -3.463111e-002, -1.790512e-002, -2.469964e-002, 3.027529e-002, 2.631035e-002, -2.855185e-003, -8.786102e-003, 2.433580e-002, 1.258606e-002, 7.946310e-003, -5.268390e-003, -1.640225e-002, -2.292237e-002, -1.414285e-003, 8.839590e-003, 3.238984e-002, -2.345759e-002, -7.326233e-003, -2.185358e-003, 2.023422e-002, 1.218870e-002, -5.674066e-003, -6.827891e-003, -1.958503e-002, 2.960188e-003, 3.123754e-003, -


© ISO/IEC 2004 — All rights reserved

Copyright International Organization for Standardization
Provided by IHS under license with ISO
No reproduction or networking permitted without license from IHS
Not for Resale

1.758549e-003, 4.341604e-003, -1.219220e-002, -7.411124e-003, 6.171331e-003, 9.935745e-003, -5.079986e-004, -1.087711e-002, -3.502067e-003, -1.765309e-002, 7.957722e-003, 7.730086e-003, 6.991739e-003, 1.873769e-002, -5.324108e-003, 2.466889e-002, 4.102133e-002, 4.102133e-002, 2.466889e-002, -5.324108e-003, 1.873769e-002, 6.991739e-003, -2.047001e-002, 4.692967e-003, -8.329031e-002, -2.273080e-002, -5.112618e-003, -3.426026e-003, -1.704766e-002, -1.430717e-002, -1.327454e-002, 5.105879e-002, -3.030942e-002, 3.879665e-002, 5.830260e-002, -3.910719e-002, 6.077192e-003, -1.260445e-002, -2.247713e-002, 3.379055e-003, 7.403324e-003, 3.683902e-002, 7.789143e-003, 4.233602e-002, 7.847004e-003, 2.514165e-002, -7.103430e-002, -2.814876e-002, -2.404598e-002, -9.123225e-003, -2.084401e-003, 6.606014e-003, 2.262885e-002, -9.363666e-003, 3.874768e-002, 2.758167e-003, 1.907870e-002, 2.589103e-003, -1.830391e-002, -1.029408e-002, -1.445046e-002, 1.652732e-003, 2.056683e-002, 1.246903e-002, -8.381020e-003, 2.510700e-002, 2.065135e-002, 9.640482e-003, -3.878818e-003, -2.173162e-002, -6.561828e-003, -1.537910e-002, 1.038016e-002, 2.893757e-003, -5.356263e-003, -8.665351e-003, 1.519670e-003, 3.736287e-003, 8.477705e-004, 3.826901e-004, -1.450147e-002, -1.406917e-002, -5.047199e-004, 5.392235e-003, 2.722116e-004, 2.955399e-003, -7.117845e-003, 2.083113e-002, 3.800032e-002, -6.394205e-002, -4.188847e-002, -4.188847e-002, -6.394205e-002, -1.371753e-001, -2.884122e-003, 2.891784e-002, -1.193132e-002, -1.149347e-002, -6.345863e-002, -1.870296e-002, 6.373676e-003, -5.993897e-003, -3.609103e-003, 4.101113e-002, -6.192916e-002, -2.751357e-002, -2.751357e-002, -6.192916e-002, -1.289200e-001, -5.236632e-002, -2.413329e-002, -1.614208e-002, -3.222832e-002, -7.226157e-002, -5.663030e-003, 2.260008e-003, -5.688697e-003, -7.818161e-003, -9.077100e-002, -3.005728e-002, -1.165657e-002, -1.165657e-002, -3.005728e-002, -1.798509e-001, -3.234514e-002, -1.257628e-002, -9.046795e-003, -2.758703e-002, -8.330749e-002, -5.869807e-003, -2.861101e-003, 4.034653e-003, 3.594675e-003, 7.540281e-002, -5.738825e-002, -3.288399e-002, -3.288399e-002, -5.738825e-002, -8.209666e-002, -2.670963e-002, -1.344153e-002, 1.513114e-002, 8.370910e-003, -5.070339e-002, -3.193640e-003, -6.530484e-003, 1.390884e-002, -1.532506e-002, 3.852099e-002, -2.559114e-002, -1.002066e-002, -1.002066e-002, -2.559114e-002, -8.352554e-003, 2.844296e-002, 4.646948e-002, -1.914555e-002, -4.398932e-003, 1.240807e-002, 1.682574e-002, 1.441988e-002, 3.997891e-003, 7.476075e-004, -1.339268e-001, -8.765355e-002, -3.278136e-002, -3.278136e-002, -8.765355e-002, 3.345633e-001, -1.005470e-002, -9.711834e-003, -1.282416e-002, -3.731419e-002, 1.075443e-001, -6.284411e-003, 8.277738e-003, 4.868006e-003, -3.735955e-003, -8.014878e-002, 1.375438e-002, -1.063766e-002, -1.063766e-002, 1.375438e-002, 2.994002e-001, 6.638280e-003, -4.218156e-003, -1.164926e-003, 9.107554e-003, 9.013306e-002, -1.324106e-002, 2.103313e-003, 6.228243e-003, 4.053452e-003, 6.531943e-002, 3.515545e-003, 1.498244e-002, 1.498244e-002, 3.515545e-003, 2.121779e-002, 2.711719e-002, -7.898329e-003, 3.207340e-002, 4.103971e-002, 1.026890e-002, 3.725766e-003, 1.558456e-003, 1.260376e-002, 1.739428e-002, -4.683886e-002, 2.382897e-002, 1.274611e-002, 1.274611e-002, 2.382897e-002, -1.937389e-002, 1.790071e-002, 6.993211e-003, 7.933552e-003, 9.507294e-003, -7.551108e-003, 8.624376e-003, 5.349195e-003, -1.065577e-002, -2.664106e-003, 1.675044e-001, -8.475959e-002, -1.931847e-002, -1.931847e-002, -8.475959e-002, 5.927151e-002, 2.364739e-002, 1.883145e-003, -6.219589e-003, -4.634243e-003, 5.336629e-002, 1.108632e-005, 1.536740e-002, 4.875544e-003, 2.474349e-002, 1.285605e-001, -8.442024e-002, -4.372545e-002, -4.372545e-002, -8.442024e-002, 5.912324e-002, 9.419439e-003, -1.225209e-003, 1.080173e-002, 3.133683e-002, 5.787605e-002, 1.500459e-002, 7.767462e-003, 1.534386e-002, 1.723416e-002, -1.319969e-002, -5.754833e-002, 5.202540e-003, 5.202540e-003, -5.754833e-002, -4.352240e-002, -4.272629e-003, -1.739964e-002, -3.160834e-003, -5.413259e-004, -2.589485e-002, -1.210442e-002, -1.167431e-002, -9.226520e-004, -8.013596e-004, -3.346276e-002, -8.552291e-003, -2.764020e-002, -2.764020e-002, -8.552291e-003, -1.867818e-002, 2.742144e-002, -1.221218e-002, -4.466490e-003, 3.644447e-002, -8.579521e-003, 6.604585e-003, 7.640356e-003, -1.042977e-002, -1.837453e-003, -6.862677e-002, -3.877246e-002, -1.719605e-002, -1.719605e-002, -3.877246e-002, 1.291944e-001, 7.595433e-003, 1.606507e-003, -2.738250e-003, -9.321107e-004, 3.030036e-002, 2.852447e-003, -5.349307e-003, -8.281364e-003, -1.753109e-002, -6.393501e-002, -2.985104e-002, -2.876287e-002, -2.876287e-002, -2.985104e-002, 1.340061e-001, -2.505722e-003, 4.468421e-004, 8.667108e-003, 1.016330e-002, 3.197754e-002, -1.505045e-002, -3.741620e-003, 6.971238e-004, 4.737442e-003, -4.369569e-002, -1.579171e-002, 4.609319e-003, 4.609319e-003, -1.579171e-002, -7.039359e-002, 2.749081e-002, 3.220444e-004, 7.435835e-004, -3.842676e-003, -3.827987e-002, -1.010054e-002, -9.090822e-003, -4.354160e-003, -1.381657e-002},
{-7.912714e-003, -2.906323e-003, -1.149314e-002, 1.309917e-002, 1.069087e-002, 9.917390e-003, -1.505765e-002, 2.746476e-002, -3.540527e-003, -2.020341e-002, 2.094744e-002, 2.953739e-002, 2.094744e-002, -2.020341e-002, -3.540527e-003, 2.746476e-002, -1.505765e-002, 9.917390e-003, 1.069087e-002, 1.309917e-002, -1.149314e-002, -2.906323e-003, 1.342176e-003, 2.564488e-003, 7.173565e-003, 4.702280e-004, -7.960025e-004, -5.442631e-003, -3.572031e-002, -1.459095e-002, 1.291673e-002, -4.686961e-002, -1.142272e-002, -3.549623e-003, 4.014121e-002, -3.557047e-002, 9.325902e-003, 1.039750e-002, -1.950781e-002, -7.278111e-003, 1.324928e-002, 3.218666e-003, 8.266142e-003, -4.293123e-003, -2.335679e-002, 4.009587e-003, 9.772372e-004, 7.913398e-003, -5.249729e-003, 8.367561e-003, 2.563429e-002, 3.453388e-002, -2.514526e-002, -4.623407e-002, 1.662451e-003, -1.571238e-002,

© ISO/IEC 2004 — All rights reserved
--`,,```,,,,````-`-`,,`,,`,`,,`---


Copyright International Organization for Standardization
Provided by IHS under license with ISO
No reproduction or networking permitted without license from IHS
Not for Resale

2.851796e-003, 6.938116e-003, 1.558557e-003, 1.290021e-002, 4.671738e-003, -9.410995e-003, -9.070518e-003, 2.894553e-002, 1.011314e-002, 1.727396e-003, 2.604865e-002, -4.864775e-003, 1.602630e-002, 5.153251e-002, -7.421154e-003, 1.218404e-002, -5.911945e-003, 7.932878e-003, -2.355248e-003, -1.374301e-003, -3.509490e-003, -9.374326e-003, 4.504092e-003, -7.485102e-003, 1.673426e-002, -2.136165e-002, 1.752961e-002, -9.188143e-003, 6.862634e-004, 6.312840e-002, 6.960074e-003, -5.272587e-002, 7.705359e-003, 2.048365e-002, -4.618946e-002, -6.427133e-003, -2.044324e-002, -1.234699e-002, -3.220387e-002, 6.516822e-003, -2.165928e-002, -2.615860e-002, -1.070625e-003, -3.510537e-002, -3.549801e-002, -1.492761e-002, 1.191891e-002, 2.079322e-003, -2.615433e-002, 7.718689e-003, 8.335751e-004, 4.798355e-002, -9.926399e-003, -2.304267e-002, 7.367056e-003, -4.841594e-002, 4.516017e-002, 2.692377e-002, 1.088647e-002, 9.170780e-003, -1.628184e-002, -1.583145e-002, -1.295435e-002, -7.905020e-002, -2.922046e-002, -6.278957e-002, -3.534465e-002, -3.546856e-002, -5.468383e-003, 2.585833e-002, 6.216022e-003, -2.819814e-002, -2.752023e-002, 8.195311e-003, -1.643158e-003, -1.392109e-002, -9.390140e-003, 1.037547e-004, -1.537143e-002, -8.211599e-003, -1.365338e-002, 3.664599e-002, -6.626271e-002, -1.309279e-002, -4.412043e-002, -3.565928e-002, -3.690699e-002, -1.607285e-002, -3.723558e-002, 1.913719e-002, 2.040658e-002, 3.098116e-002, 2.373938e-002, -4.704481e-002, 2.816049e-002, 1.376059e-002, 3.099342e-002, -1.462657e-002, 6.369579e-003, 3.444143e-003, 2.901286e-002, 5.160540e-002, 2.969971e-002, 8.711629e-003, 5.500000e-003, 6.342439e-002, -5.522625e-002, -3.322724e-002, -1.446727e-003, -4.290093e-003, -2.623371e-003, -2.078200e-002, 3.637856e-002, 1.451696e-002, 7.148451e-003, 4.959119e-003, -5.629556e-002, -6.174375e-003, 2.330315e-002, -2.044044e-002, -5.505917e-002, 1.932318e-002, -3.014611e-002, 1.119231e-002, -3.953017e-002, -7.329601e-003, 2.063265e-002, 1.195699e-002, 7.353061e-003, 1.234162e-002, -2.324659e-002, -1.882725e-002, 1.217857e-002, -3.156662e-002, -5.797466e-002, -3.058663e-003, -6.522641e-002, -4.352013e-003, -6.967772e-003, -1.924060e-003, -2.713929e-002, -7.226471e-003, 2.009921e-002, 3.209117e-003, -4.792176e-002, 7.960645e-003, -2.811535e-002, -4.242216e-002, -2.044673e-002, -3.130910e-002, -2.769903e-002, -3.693309e-002, -1.924841e-002, -1.909790e-002, -2.757065e-002, -3.037899e-002, -6.334633e-002, -5.989385e-002, -2.842699e-002, -2.498515e-003, -1.493559e-003, 5.342843e-002, 5.187657e-003, 1.456842e-003, -5.906848e-002, 5.768386e-002, -5.684162e-002, 6.209035e-003, -1.284869e-002, -3.126753e-002, -4.645216e-002, -4.341905e-002, -3.828139e-002, -3.253061e-002, -3.103576e-002, -9.976403e-003, -3.673432e-002, -3.181996e-002, -2.819749e-002, -3.671915e-002, -4.836220e-002, -2.724556e-002, 6.837698e-002, -2.072439e-002, -1.674707e-002, 6.986466e-003, 2.721170e-002, -3.768699e-002, -2.202766e-002, -4.701772e-002, -1.592134e-002, -2.942016e-002, -5.479862e-002, -2.141184e-002, -2.151123e-002, -1.815474e-002, -1.369291e-002, -1.717867e-002, -2.243262e-002, -3.254768e-002, -2.061545e-002, -1.999040e-002, -5.137791e-002, -2.859779e-002, -6.791638e-002, 4.969513e-003, -8.238069e-002, -3.902543e-002, -2.458750e-002, 3.778602e-002, -4.461620e-002, -5.856556e-003, -3.701715e-002, 6.797211e-003, -1.662832e-002, -1.361588e-002, -1.429202e-002, -2.854464e-002, -1.448013e-002, -1.715159e-002, -2.585396e-002, -2.296994e-002, -8.768778e-003, 1.311699e-003, 8.352810e-003, -6.106588e-003, -2.265010e-002, -2.175730e-002, -1.256298e-002, -1.376449e-002, 4.098010e-002, -1.614961e-002, -9.251474e-003, 3.189487e-002, 4.839857e-003, -2.026335e-002, -8.090375e-003, -1.616375e-002, -1.215591e-002, -1.510116e-002, -1.069018e-002, -2.087040e-002, -1.723010e-002, -2.000304e-002, -1.010329e-002, -2.444659e-002, -2.160177e-002, -2.655629e-002, 9.312296e-003, 3.713868e-002, 2.622169e-003, -2.705225e-003, -1.697728e-002, -1.054215e-002, -2.113010e-003, -1.043289e-002, -2.689056e-002, -1.405935e-002, -1.405935e-002, -2.689056e-002, -1.043289e-002, -2.113010e-003, -1.054215e-002, 7.704014e-002, -1.250016e-002, -5.123785e-002, -2.610768e-002, 8.797636e-003, 2.026891e-004, -2.689674e-004, 1.586567e-002, -4.964704e-003, 8.162104e-002, 1.936730e-002, -4.924410e-003, 1.584758e-002, -1.822051e-002, -1.377531e-002, -4.707609e-002, -2.070867e-002, 1.100044e-002, 1.795561e-002, 2.067071e-002, 1.577283e-002, -3.520733e-002, -8.187107e-002, 1.541259e-002, -3.470478e-003, -4.240296e-002, -2.878737e-002, -2.963419e-002, 6.255843e-004, 2.771552e-003, -1.751423e-002, -1.960967e-002, -1.518414e-002, 7.725479e-002, 3.220337e-002, -2.465672e-002, -1.605871e-002, -1.318832e-002, -2.044775e-002, -1.827964e-003, -7.161216e-003, -1.960128e-002, -3.361670e-002, -2.892433e-002, -1.203560e-003, 1.434547e-002, -1.788499e-002, -3.128916e-002, -3.041091e-002, -2.355544e-002, -6.615779e-003, -3.923900e-003, -1.770707e-002, -2.155576e-002, -2.310553e-002, 3.722332e-003, 4.154175e-003, -3.020395e-003, -1.224821e-002, -2.309485e-002, -9.845542e-003, -9.296447e-004, -7.670320e-004, -1.356919e-002, -2.124139e-002, 4.332301e-003, -1.184714e-002, 5.470116e-003, -1.458932e-002, -2.152607e-003, 3.073730e-002, -1.068690e-002, -1.068690e-002, 3.073730e-002, -2.152607e-003, -1.458932e-002, 5.470116e-003, 6.457116e-002, -1.112870e-002, 1.469432e-001, 2.871057e-002, -2.326234e-002, -3.072868e-002, -1.747834e-002, -6.829374e-003, -1.389622e-001, -4.094319e-002, 3.066724e-002, -5.208014e-002, 5.665365e-003, -1.425129e-002, 1.746326e-002, -3.281866e-005, -4.722363e-003, -1.616553e-002, -1.447150e-002, -3.438164e-003, 9.131890e-003, -1.181336e-002, 3.497855e-002, 2.086681e-002, -1.029761e-002, -1.451752e-002, -1.668210e-002, -1.546694e-002, -3.447605e-002, -2.452188e-002, 1.296611e-002, -5.927328e-003, 4.180188e-002, 1.362242e-002, -3.551955e-002, 4.414226e-004, -1.551884e-002, -1.410781e-002, -1.088497e-002, -2.667959e-002, -4.905975e-002, -2.781753e-002, 3.070588e-003, 2.426842e-002,


© ISO/IEC 2004 — All rights reserved

--`,,```,,,,````-`-`,,`,,`,`,,`---

Copyright International Organization for Standardization
Provided by IHS under license with ISO
No reproduction or networking permitted without license from IHS

Not for Resale

4.009223e-003, -1.347274e-002, -1.643648e-002, -1.685068e-002, -1.462693e-002, -1.312846e-002, -2.284943e-002, -2.842140e-002, -2.801333e-002, 7.610472e-003, 1.980232e-002, 1.062436e-002, 1.215596e-002, -2.460610e-002, -1.402349e-002, -1.259873e-002, -8.494483e-003, -2.037868e-002, -1.666205e-002, -9.864071e-003, 1.338308e-003, 1.137633e-002, 1.047394e-002, -2.812253e-002, -2.386966e-002, -1.064308e-002, -6.762923e-002, -3.543188e-002, -3.543188e-002, -6.762923e-002, -1.064308e-002, -2.386966e-002, -2.812253e-002, -4.915881e-002, -4.827085e-002, -4.428269e-002, 3.323014e-002, 1.830052e-002, 1.405929e-002, 2.059151e-003, 5.616206e-002, -9.562423e-002, -1.060527e-002, -3.631453e-003, 5.178620e-002, 1.292035e-001, 7.891549e-002, 2.788815e-002, 2.470941e-002, 1.775596e-002, 7.897370e-003, 4.653025e-002, 2.570526e-002, 7.096029e-002, 5.769654e-002, 2.488144e-002, 6.072668e-002, 2.347974e-002, 1.840124e-002, 2.082576e-002, 8.723510e-003, 7.662260e-003, 3.358894e-002, 4.078007e-002, 3.899910e-002, 8.206057e-002, 5.290116e-002, -2.647032e-003, -1.529097e-002, -5.195494e-003, 5.223676e-003, 5.341480e-003, 5.421512e-003, 7.269312e-003, 4.175784e-003, 3.757763e-002, 2.267619e-002, 8.107777e-002, 2.579843e-003, 5.885273e-003, -1.211783e-002, -6.247653e-003, -3.100483e-003, -4.052587e-003, -3.872450e-003, -6.238204e-003, 1.628566e-002, 1.745549e-002, 3.918868e-002, 1.296246e-002, 8.203834e-003, -1.981571e-003, 1.001500e-003, -4.788343e-003, -2.876252e-003, 4.637802e-004, -2.672005e-003, 2.993542e-004, 2.621533e-002, 1.043776e-002, -3.823906e-002, -4.651643e-002, -5.726287e-003, 2.568089e-003, -3.758591e-002, -3.758591e-002, 2.568089e-003, -5.726287e-003, -4.651643e-002, -3.823906e-002, -3.117166e-002, 2.960581e-003, -2.502658e-002, -7.266560e-002, -3.140869e-002, -4.228295e-002, -2.881649e-002, -5.441573e-002, -3.530687e-002, -9.078671e-002, -3.030412e-002, 8.565297e-002, 8.581205e-002, 1.848024e-002, 7.086769e-003, 1.957932e-002, -1.675407e-003, -1.713780e-003, 7.531784e-003, 5.079429e-002, 1.360746e-001, 6.243756e-002, 2.842653e-003, 6.170363e-002, 6.970291e-002, 4.339590e-002, 4.230613e-003, 4.643525e-003, 7.781940e-004, 2.034481e-002, 2.229265e-002, -1.236956e-003, -4.630714e-002, 8.995059e-002, 2.501250e-002, 3.939927e-002, 2.095585e-002, 1.619072e-002, 3.446380e-003, -4.263233e-003, -6.459687e-003, -9.231580e-003, -2.824226e-003, -1.830102e-002, 9.444737e-002, 3.133712e-003, 1.077527e-002, 3.370556e-003, -3.661480e-003, 2.366439e-003, -1.307008e-002, -6.753438e-003, -4.896459e-003, 1.573389e-002, -1.231081e-002, 4.184536e-002, 1.769984e-003, -4.712743e-003, 7.199988e-003, 1.187703e-003, -3.949455e-003, -1.906464e-003, -5.385108e-003, -7.321741e-003, -1.195861e-002, -2.132825e-003, 2.348899e-002, -3.842714e-002, 3.217802e-002, 3.217802e-002, -3.842714e-002, 7.159948e-002, -5.253725e-002, -4.077292e-002, -1.437800e-002, -4.241164e-002, 5.139261e-002, -1.982333e-002, -5.066219e-003, -1.934597e-003, -1.522556e-002, 7.052046e-002, 4.196564e-002, 1.875371e-002, 1.875371e-002, 4.196564e-002, -1.582562e-001, 9.326322e-003, 9.877672e-003, 2.861138e-003, -6.937722e-003, 2.974920e-002, 2.317367e-003, 3.089688e-003, 5.257328e-004, 2.006544e-003, 1.769046e-001, 5.254810e-003, 4.093960e-004, 4.093960e-004, 5.254810e-003, -1.244094e-001, -1.125274e-002, -8.231334e-003, -8.297643e-003, -1.854608e-002, 4.490539e-003, -2.439516e-003, -9.732107e-004, -4.609919e-003, -6.259583e-003, 2.386176e-002, -7.196894e-002, -3.373141e-002, -3.373141e-002, -7.196894e-002, 7.984481e-002, -2.147210e-002, 2.512860e-003, -9.669640e-003, 2.727869e-003, 4.461228e-002, -7.998945e-003, -1.542908e-003, -1.032217e-002, 8.975887e-004, -8.445563e-002, 4.711802e-002, 3.521431e-002, 3.521431e-002, 4.711802e-002, 5.421707e-002, -1.178537e-003, -1.438036e-002, 2.159996e-002, 1.682281e-002, 1.564329e-002, -1.262128e-002, -9.001116e-003, -3.327125e-003, -2.399778e-003, -2.653110e-002, 1.519002e-001, 3.289557e-002, 3.289557e-002, 1.519002e-001, 8.957015e-002, 3.551959e-002, 4.186235e-003, -1.511939e-003, 4.387656e-002, -3.624391e-002, -3.778798e-003, -1.388321e-003, -5.673323e-003, -3.767850e-002, -1.049290e-001, 8.565108e-002, 1.849321e-002, 1.849321e-002, 8.565108e-002, 1.087590e-001, 9.769179e-003, 1.819488e-003, 9.105267e-004, 1.438863e-002, -1.991961e-002, -2.095941e-002, -9.601219e-003, -9.048969e-003, -2.217938e-003, -1.076845e-001, 4.097148e-002, 3.602785e-002, 3.602785e-002, 4.097148e-002, 1.106012e-001, 9.541369e-003, 8.834371e-003, 5.184970e-003, 4.165232e-002, 1.826200e-002, 1.308150e-003, -5.310403e-003, -5.321879e-003, -4.472603e-003, 9.890300e-002, 5.650345e-002, 4.198516e-002, 4.198516e-002, 5.650345e-002, 3.266218e-002, 1.680617e-002, -4.077659e-003, 1.879225e-002, 3.181898e-002, 1.300039e-003, -3.297221e-004, -2.755115e-003, 1.166603e-002, 7.208675e-003, 1.381123e-002, -8.845020e-002, -4.035728e-003, -4.035728e-003, -8.845020e-002, 3.651758e-002, -3.983499e-003, 2.344549e-003, 6.131715e-003, 1.220559e-003, 1.347398e-002, -9.723008e-003, -3.840331e-003, 3.369295e-003, 2.557090e-002, -1.183910e-002, -2.101548e-002, 1.776116e-002, 1.776116e-002, -2.101548e-002, 2.339642e-002, -9.820576e-003, 3.815575e-003, -6.368565e-003, 6.150664e-003, 7.179133e-003, 2.399019e-002, 3.157320e-004, -6.601371e-003, -2.888503e-003, 8.924127e-002, 8.688816e-002, 2.571235e-002, 2.571235e-002, 8.688816e-002, 7.941810e-003, 3.332366e-003, 9.850715e-003, -3.711407e-003, 2.910512e-003, 8.657976e-003, 7.810930e-003, 5.275981e-003, -5.328087e-003, -3.256206e-003, 6.772808e-003, 3.151400e-002, 1.875703e-002, 1.875703e-002, 3.151400e-002, -8.520271e-003, 5.695277e-002, 2.552898e-002, 1.183463e-002, 1.752037e-003, -4.054293e-003, 3.446484e-003, 1.177424e-002, 6.508919e-004, -7.300569e-003, -1.090131e-001, 3.551485e-003, -6.577912e-004, -6.577912e-004, 3.551485e-003, 8.984500e-002, 3.923308e-003, 3.796170e-003, 1.696060e-002, 4.320912e-002, 4.108770e-002, -1.956235e-003, 4.005261e-004,

© ISO/IEC 2004 — All rights reserved


Copyright International Organization for Standardization
Provided by IHS under license with ISO
No reproduction or networking permitted without license from IHS
Not for Resale

4.540459e-003, 1.785493e-002, -7.623245e-002, 1.782533e-002, 1.582699e-002, 1.582699e-002, 1.782533e-002, 1.501511e-001,
3.629531e-002, 1.130128e-002, 7.996975e-003, 2.238521e-002, 5.218303e-002, 2.739512e-002, 2.486287e-003, 1.694132e-003, -
3.450681e-003, 9.268034e-003, 6.930661e-002, 5.054968e-003, 5.054968e-003, 6.930661e-002, -5.599609e-002, 7.377361e-003, -
1.935769e-004, 4.412041e-003, 2.940158e-002, 1.857416e-002, 3.786193e-003, 1.253461e-003, 8.901136e-003, 6.570411e-003},
{-9.667859e-003, -8.136078e-003, -1.163491e-002, -1.883933e-002, -1.879487e-002, -1.345221e-003, 7.171632e-004, -4.467938e-003,
-1.310661e-002, 1.214777e-002, -1.144718e-002, 8.415840e-003, -1.144718e-002, 1.214777e-002, -1.310661e-002, -4.467938e-003,
7.171632e-004, -1.345221e-003, -1.879487e-002, -1.883933e-002, -1.163491e-002, -8.136078e-003, -4.588127e-002, -2.658930e-002, -
2.029712e-002, 2.480901e-002, 5.047843e-002, 1.992138e-002, 3.855380e-002, 2.831200e-003, 3.855151e-002, -3.179130e-002,
7.704597e-003, -7.119633e-003, -2.958228e-003, 8.315179e-004, 2.331562e-002, 1.555659e-002, 1.330714e-002, 2.069285e-002,
1.762502e-002, 1.994502e-002, -2.417036e-002, -2.534357e-002, -7.057221e-003, -4.893457e-003, -1.237400e-002, 4.194303e-003,
2.783216e-002, 7.157473e-003, -3.832977e-003, -2.300474e-003, -6.508711e-003, 5.313339e-003, -2.141859e-002, -1.813774e-002, -
1.902005e-002, -1.460076e-002, 1.059578e-002, -5.733223e-004, -1.835430e-002, -2.416489e-002, -1.040288e-002, 1.423314e-002,
6.620867e-003, 5.673845e-003, -6.980104e-003, 1.235552e-003, -1.923040e-002, 3.565783e-003, 3.630152e-003, -3.013165e-002, -
2.485073e-002, -1.597570e-002, -3.475201e-002, -1.726551e-002, -3.986426e-002, -1.373845e-002, -5.177157e-003, 1.495191e-002,
2.360381e-002, 3.672950e-002, 3.697652e-003, 1.656276e-004, -1.815806e-003, 1.112109e-002, -1.889269e-002, 1.315837e-002, -
3.698419e-002, -2.363582e-002, 6.013285e-003, 3.927712e-002, 1.826733e-002, 1.133660e-002, 8.584410e-004, -8.592280e-003, -
3.499806e-002, -4.318504e-002, 1.303503e-002, 3.215415e-002, -1.621812e-003, -1.882095e-002, -7.813130e-003, -2.901908e-002, -
2.575463e-003, -3.897225e-002, 2.479697e-002, 2.983277e-002, 4.768465e-003, -1.329792e-002, -8.167314e-003, -1.695056e-003, -
1.482558e-002, -4.241375e-003, 2.929963e-002, -1.191910e-002, 1.234889e-002, 5.134422e-002, -2.773705e-002, 1.776956e-002, -
2.268389e-003, 9.927675e-003, 1.552893e-002, -2.092080e-002, -1.060072e-003, 2.773642e-002, -3.818599e-002, -2.351036e-002,
3.782432e-002, 1.690490e-002, 5.161034e-003, -1.187821e-002, -1.917687e-002, -3.229760e-004, -2.072729e-002, 1.450418e-002, -
1.552019e-002, -1.398461e-002, -3.241685e-002, 8.314888e-003, 2.440283e-002, -1.360154e-002, -4.250672e-003, -2.225456e-002,
2.577679e-003, -8.282328e-003, 1.147009e-002, -3.606117e-003, -1.612878e-002, -2.372928e-002, 3.420015e-004, 2.699977e-003, -
7.861401e-003, -3.123178e-003, -1.536147e-002, -7.328316e-003, -2.375762e-002, -1.656100e-002, 1.995877e-003, 1.462336e-002, -
3.407926e-002, -1.272591e-002, -3.588432e-002, -6.209835e-003, 7.894399e-003, -2.804817e-003, -9.800889e-003, -8.706583e-003,
1.293348e-002, -6.001028e-002, -2.078763e-002, -3.924762e-002, -4.429750e-002, 2.313955e-002, -4.146220e-003, -5.992954e-004,
7.131971e-003, -1.817191e-002, 4.293218e-002, 5.196269e-003, 8.361003e-003, -2.384958e-002, 3.117529e-002, -2.227139e-002, -
1.573508e-002, -7.018208e-003, -2.220184e-002, 1.142107e-002, 3.515182e-003, 1.325015e-002, 8.699948e-003, -6.965834e-003,
3.122451e-003, -9.746824e-003, 2.671672e-002, 2.598085e-002, 3.449465e-003, 1.476610e-002, 8.199513e-003, 8.480499e-003, -
2.586548e-003, 2.811367e-002, 3.788596e-002, 4.628552e-002, -3.385083e-002, -4.683337e-002, 7.382074e-003, -1.230898e-002, -
8.993835e-003, 9.999046e-003, -8.300202e-005, -4.913679e-003, 2.963494e-002, 8.501837e-004, 4.346396e-002, 1.010229e-002,
4.354013e-002, 2.979670e-002, 2.312326e-002, 3.648881e-002, 1.433800e-002, -2.696399e-002, 3.071390e-002, 4.349847e-002,
4.730460e-002, -1.700584e-002, 2.181877e-002, 1.668085e-002, -9.954402e-003, -1.212078e-002, 5.636728e-003, -2.252762e-003,
6.959251e-003, 4.699146e-003, -2.016405e-003, 2.669639e-003, 3.875252e-002, 2.087294e-002, 1.328342e-002, 1.950057e-002, -
2.374300e-002, -2.410773e-002, -1.367606e-002, 3.877296e-002, 2.539469e-002, 5.764727e-002, 2.424005e-002, 7.774318e-003,
4.489876e-002, -4.375847e-003, -1.803281e-003, 9.377581e-003, 8.336297e-003, 5.263058e-003, -7.213124e-003, 1.032137e-002,
4.795013e-003, 1.480681e-002, 1.948196e-002, 1.571524e-002, 2.728400e-002, -2.495525e-002, 2.406259e-002, 4.796558e-002, -
6.833001e-003, 2.394426e-002, -5.388851e-003, 3.864592e-002, 1.782112e-002, 2.947941e-002, 2.990488e-002, -3.796938e-003, -
1.459426e-003, -8.984824e-003, 3.120310e-003, 9.486767e-003, 3.485301e-003, 4.547526e-003, 1.367781e-002, 3.273220e-003,
3.594494e-002, 3.574597e-002, 1.433098e-002, 8.122314e-002, -4.608752e-002, -1.309354e-002, -8.666101e-004, 2.634845e-003, -
1.567074e-003, 7.805200e-003, 3.429497e-002, 1.545207e-002, 3.511445e-003, 7.103190e-003, -3.427287e-003, -3.197878e-003,
4.175304e-003, 7.037654e-003, 4.705091e-003, 1.268845e-002, 7.937033e-003, 1.184406e-002, 2.306821e-002, 4.931347e-003,
1.401430e-002, -1.673880e-002, 1.465776e-003, -2.415007e-002, -1.435566e-002, -9.507213e-003, 3.151857e-002, -1.944440e-002,
1.389537e-002, -2.572527e-003, -2.572527e-003, 1.389537e-002, -1.944440e-002, 3.151857e-002, -9.507213e-003, -3.344562e-003,
1.083260e-002, -2.454079e-002, -6.716230e-002, 1.564261e-003, 5.331102e-003, 4.783407e-003, 3.268907e-002, 5.657529e-002,
4.821658e-002, 8.009882e-002, 9.627812e-002, -2.352461e-002, -2.191559e-002, 2.616639e-002, 2.841729e-002, 2.384167e-002, -
9.827969e-003, -4.890051e-003, -8.283066e-003, 5.443314e-002, 1.005257e-001, -1.719117e-002, 3.163230e-002, -3.012257e-002,
2.609249e-002, 1.487196e-002, -4.041077e-003, -2.769993e-003, 4.015987e-003, -1.356988e-002, -5.972646e-003, 4.004337e-002,


© ISO/IEC 2004 — All rights reserved

Copyright International Organization for Standardization
Provided by IHS under license with ISO
No reproduction or networking permitted without license from IHS
Not for Resale

2.539561e-002, -1.342102e-002, 8.630540e-003, 3.533847e-002, 2.244174e-002, 9.419708e-003, 2.026272e-003, 7.225073e-003, 1.052075e-002, 1.161648e-002, 4.236259e-002, 9.770462e-003, 1.458563e-002, 4.882021e-002, 1.215548e-002, 1.372609e-002, 7.331265e-003, 4.483586e-003, 5.259556e-003, 1.193257e-002, 2.214056e-002, -2.221308e-002, -2.882620e-003, 3.848138e-002, 4.496965e-002, 2.102863e-002, 5.647372e-003, 6.139619e-003, 5.068606e-003, 5.699097e-003, 9.830293e-003, 7.633801e-003, -1.230899e-002, -4.678813e-002, 8.958831e-003, 1.823790e-002, 1.501466e-003, -2.386278e-002, 1.843359e-002, 1.843359e-002, -2.386278e-002, 1.501466e-003, 1.823790e-002, 8.958831e-003, 7.710822e-003, 1.295665e-001, -2.499686e-002, -5.363978e-002, -1.202870e-003, -5.025527e-004, -6.616004e-003, 2.903837e-002, -2.602177e-002, 2.922847e-002, 2.926574e-002, 1.193770e-001, 1.335573e-001, 3.747786e-002, -2.193666e-002, 3.424649e-003, 6.265585e-003, 2.135843e-002, 2.697177e-002, 5.770767e-002, 2.834849e-002, 3.087554e-003, -2.619928e-002, 4.829105e-002, -1.992942e-002, 1.618712e-003, 1.522272e-002, 4.974241e-003, 1.963385e-002, 2.263568e-002, 7.569538e-003, -1.764210e-002, -4.328503e-002, -7.158535e-003, 5.065909e-002, -3.955318e-003, 1.180418e-002, 7.785591e-003, 2.282838e-003, 2.011642e-002, 3.716769e-002, 2.157151e-002, 7.688319e-003, -1.806865e-002, 1.223192e-002, -1.556607e-002, 1.029216e-002, 1.488509e-002, 6.572759e-003, 2.655299e-003, 1.518649e-002, 2.497901e-002, 2.795835e-002, 3.213788e-002, 8.759337e-003, -5.257870e-003, -1.959380e-002, 3.898042e-003, 1.196083e-002, 6.469198e-003, 2.509873e-003, 1.278685e-002, 1.962143e-002, 2.239031e-002, 4.399417e-002, 2.380795e-002, 1.965330e-002, 1.633329e-002, -1.135690e-002, -6.705498e-003, -3.225516e-002, 1.694146e-003, 1.694146e-003, -3.225516e-002, -6.705498e-003, -1.135690e-002, 1.633329e-002, 2.461472e-002, 9.005045e-003, -3.445551e-002, -3.937907e-002, -2.291019e-002, -4.492211e-003, -9.684682e-003, -1.912011e-002, -2.618235e-002, 7.964870e-003, -3.582804e-002, -4.454496e-002, 2.648469e-003, -4.946442e-002, -5.972566e-002, -5.441803e-002, -1.760650e-002, -2.459285e-002, -5.743571e-002, -1.646000e-002, -1.058232e-001, -1.328141e-002, -4.910791e-002, -2.233253e-002, 5.687768e-003, -3.392200e-002, -2.956017e-002, -2.464187e-002, -1.543832e-002, -1.870584e-002, -3.009481e-002, -3.997582e-002, 2.896051e-002, -3.095651e-002, -2.539366e-002, -5.480155e-003, -1.445891e-002, -1.959350e-002, -2.165509e-002, -1.440214e-002, -2.778138e-002, -2.982927e-002, -5.113890e-002, -4.348769e-002, 1.146002e-002, 6.416835e-003, 4.340155e-002, 1.432152e-002, -1.557865e-004, -1.052255e-002, -8.985130e-003, -9.965082e-003, -2.106917e-002, -4.332085e-003, -3.690883e-002, -4.753529e-002, -1.394928e-002, -5.261152e-003, 8.342590e-003, 8.539628e-004, -4.466496e-004, -6.531609e-003, -1.080282e-002, 1.413427e-003, -1.547841e-002, -1.980912e-002, 3.182263e-002, -4.353404e-003, 1.033595e-002, -2.481775e-002, -1.906084e-002, 1.468832e-003, 1.468832e-003, -1.906084e-002, -2.481775e-002, 1.033595e-002, -4.353404e-003, 8.109142e-002, 1.591035e-002, -6.008886e-002, -4.346215e-003, -7.954233e-002, -1.971034e-002, -3.481584e-002, -2.498165e-002, 3.120442e-002, -4.260763e-002, -5.635957e-002, -6.648804e-002, -5.235774e-002, -3.354361e-002, 5.406497e-002, 6.865054e-003, -1.899393e-002, 1.113834e-003, 2.520047e-003, -6.255641e-003, -6.832915e-002, -3.723527e-002, 4.132567e-002, -2.617827e-002, -3.813434e-002, -1.492923e-002, -1.038834e-003, 8.260103e-003, 6.263224e-003, -7.376427e-003, -7.354220e-003, -5.406119e-004, -3.357416e-002, 2.660153e-003, -3.745459e-002, -1.607203e-002, -3.528102e-002, -2.207251e-002, -7.135067e-003, -1.036331e-002, 1.216321e-003, 2.071963e-002, -1.149445e-003, 1.628063e-003, 1.238540e-002, -5.466151e-003, -1.070603e-002, -1.593821e-002, -6.182916e-003, -1.194205e-002, -3.752157e-003, 5.810498e-003, 9.400716e-003, 1.804325e-002, 1.482539e-002, 6.540082e-003, -2.015303e-002, -1.490708e-002, -1.163977e-002, -1.190184e-002, -4.532918e-003, 4.208681e-003, 6.793845e-003, 9.785692e-003, 3.609162e-003, -4.867130e-003, -1.678921e-002, -7.973456e-003, 3.502995e-003, 3.502995e-003, -7.973456e-003, -8.148057e-002, -1.418607e-001, -2.622784e-002, 1.455212e-004, -3.807596e-002, -2.940878e-002, -2.903080e-002, -1.541382e-002, 2.553567e-003, -9.771222e-003, 7.708905e-002, 7.005590e-002, 3.001134e-002, 3.001134e-002, 7.005590e-002, 1.600492e-001, 3.630606e-002, 9.884684e-003, 8.825138e-003, 2.397190e-002, 4.732934e-002, 1.869980e-002, 1.072881e-002, 3.395261e-003, 1.120626e-002, 5.939048e-002, 2.960638e-002, 1.085836e-002, 1.085836e-002, 2.960638e-002, 8.146288e-002, 6.146888e-003, 3.725290e-003, 8.591510e-003, 1.909958e-002, 1.993657e-002, 6.598538e-003, 2.273514e-004, 7.128040e-003, 1.406750e-002, 2.919138e-003, 5.927592e-003, -1.375042e-002, -1.375042e-002, 5.927592e-003, -7.014222e-002, -3.894554e-002, -1.238217e-002, -2.789212e-002, -9.701094e-002, -2.161879e-002, -1.319863e-002, -2.024611e-003, -4.930297e-003, -1.890237e-002, 7.338643e-003, -2.055654e-002, -2.060703e-002, -2.060703e-002, -2.055654e-002, -4.787433e-002, 4.737819e-002, 6.152201e-002, 2.830115e-003, 1.552581e-002, 6.989466e-003, 3.080436e-002, 2.485999e-002, 4.157868e-003, 1.209302e-002, -8.199415e-002, -4.699331e-002, 1.187870e-003, 1.187870e-003, -4.699331e-002, 3.998042e-001, 5.748818e-004, -7.856402e-003, 3.640939e-003, 5.072423e-002, 5.236215e-002, -1.491602e-003, 8.448089e-003, 3.196841e-003, -7.109317e-003, -1.169526e-001, 4.139602e-002, 1.405426e-002, 1.405426e-002, 4.139602e-002, 3.710624e-001, 5.940484e-002, 1.416544e-002, 3.833473e-003, 3.452479e-002, 6.444714e-002, -9.866141e-003, 2.322134e-003, 4.522506e-003, 9.853467e-003, 7.854876e-003, -2.833004e-002, 1.361306e-002, 1.361306e-002, -2.833004e-002, -1.643210e-002, 3.655653e-002, 2.281077e-004, 6.000275e-002, 6.507173e-002, -1.055601e-002, 1.132831e-002, 3.506411e-003, 2.531556e-002, 2.519051e-002,

© ISO/IEC 2004 — All rights reserved


Copyright International Organization for Standardization
Provided by IHS under license with ISO
No reproduction or networking permitted without license from IHS
Not for Resale

3.179246e-002, -8.362942e-003, 4.735617e-003, 4.735617e-003, -8.362942e-003, 7.341025e-002, 4.297323e-002, 1.018543e-002, 2.643272e-003, 6.174032e-002, 2.185258e-002, 1.998506e-002, 6.153725e-003, 1.904824e-003, 1.298659e-003, -3.586404e-003, 8.331710e-002, 8.940707e-003, 8.940707e-003, 8.331710e-002, -7.361696e-002, 1.225965e-002, 1.843638e-003, 3.568710e-004, -3.479361e-003, 6.575247e-003, 1.202259e-002, 6.880638e-003, 9.515175e-003, 6.816189e-003, -4.824909e-003, 9.579074e-002, 3.244657e-003, 3.244657e-003, 9.579074e-002, -6.874147e-002, 1.545293e-002, 7.926945e-003, 1.581711e-002, 1.157509e-002, 1.747158e-002, 8.403478e-003, 1.048072e-002, 1.022818e-002, 2.139013e-002, 3.550904e-002, -2.602199e-002, 3.090300e-002, 3.090300e-002, -2.602199e-002, 2.128684e-002, 9.607358e-003, -5.809590e-003, 9.677179e-003, 3.268562e-002, 3.084548e-003, 3.988774e-004, -4.624947e-004, 2.974362e-003, 9.986023e-003, -5.052482e-003, 1.906204e-002, 1.103314e-002, 1.103314e-002, 1.906204e-002, 2.146184e-002, -8.182606e-002, -5.108249e-002, -3.308865e-002, -3.198251e-002, -1.027460e-002, -1.666413e-002, -3.314944e-002, -2.650045e-002, -2.280230e-002, -3.500275e-003, -2.689840e-003, -1.049287e-002, -1.049287e-002, -2.689840e-003, 6.154234e-002, -1.892971e-003, -8.260545e-003, -2.324458e-002, -4.653689e-002, 1.204758e-002, 2.778053e-003, -4.044058e-003, -1.746973e-002, -3.257742e-002, 1.692678e-002, 2.955545e-002, -6.825343e-003, -6.825343e-003, 2.955545e-002, 9.762511e-002, -2.326705e-002, -4.227431e-003, 4.261286e-003, 1.169445e-002, 2.903910e-002, -2.909921e-002, -1.395251e-002, -9.156248e-004, 7.404140e-003, -1.578829e-002, -2.140897e-002, -2.182714e-002, -2.182714e-002, -2.140897e-002, -3.325592e-002, 1.289091e-002, -7.651041e-003, -2.183407e-002, -5.307740e-002, -5.919577e-003, -6.621042e-003, -6.303864e-003, -1.813343e-002, -6.108385e-003},
{5.935658e-003, -5.689911e-003, -3.895241e-003, 1.909097e-004, 1.104251e-002, 3.592791e-003, 1.657729e-002, -2.806374e-002, 5.453044e-003, -1.038609e-003, -3.011075e-003, -2.816344e-003, -3.011075e-003, -1.038609e-003, 5.453044e-003, -2.806374e-002, 1.657729e-002, 3.592791e-003, 1.104251e-002, 1.909097e-004, -3.895241e-003, -5.689911e-003, 1.160415e-002, -3.522772e-002, -2.173490e-002, -1.511200e-002, -3.334673e-002, -1.794188e-005, -3.511982e-002, -1.956293e-002, 1.251117e-002, 2.083698e-003, -2.290840e-002, 2.959127e-002, -2.971687e-002, 8.088446e-003, 7.028898e-003, -9.554904e-003, -1.918633e-002, -9.741303e-003, -4.234689e-002, -2.013711e-002, -2.929341e-003, -2.301943e-002, -2.568956e-002, -2.008203e-002, 7.966794e-004, -1.777260e-002, -2.724816e-002, -1.537060e-002, -1.090679e-002, 3.117391e-003, 1.034375e-002, 2.458332e-002, -1.562058e-002, 2.048562e-002, 7.619698e-004, 3.133770e-002, 7.941661e-003, 1.231220e-002, 8.274089e-003, 7.169944e-004, -6.629572e-003, -1.195856e-002, 4.670624e-003, -5.073706e-002, 2.139166e-002, -1.411090e-002, -1.184987e-002, -2.272666e-002, -3.104890e-003, 2.081420e-003, -4.266676e-004, -4.338271e-002, -9.976819e-003, -4.568046e-002, 7.186941e-002, -6.372697e-002, 5.550576e-003, -1.199520e-002, -2.787040e-002, -5.311638e-002, 4.503862e-003, 1.511104e-002, 8.638172e-003, 1.757362e-002, -3.103434e-002, -2.156732e-002, -7.300009e-003, -2.847115e-002, -2.016854e-002, 1.677511e-002, -2.935409e-002, -2.965919e-002, -1.048116e-002, -9.854898e-003, 1.312853e-002, -7.376114e-003, -7.811118e-003, 9.872331e-003, -2.152893e-003, -2.086990e-003, -1.706076e-002, -9.503766e-003, 2.345650e-002, -4.350710e-002, 6.528881e-003, -2.818890e-002, -2.951359e-003, -1.407201e-002, 2.599772e-003, -1.813934e-002, 3.102275e-002, 2.403277e-002, -2.192699e-003, 1.603272e-002, 4.379866e-002, -1.190386e-002, 1.093105e-002, -1.190257e-002, 3.694680e-002, -3.064424e-002, -1.437179e-002, -3.867817e-002, -3.599325e-002, 4.285154e-002, 4.308541e-002, -1.603125e-002, 1.181511e-002, -3.900608e-002, 1.534220e-002, -9.201478e-003, -2.331246e-005, -1.148302e-002, -3.080421e-002, -5.172553e-002, 3.604691e-002, 2.535174e-003, -4.494112e-003, 4.803217e-002, -7.413598e-002, -1.077378e-002, 1.686530e-002, -2.028771e-002, -5.015006e-002, -1.875363e-002, -4.073594e-002, -1.368624e-002, -6.498796e-003, 2.062104e-002, 1.465777e-002, -1.824941e-002, -1.197978e-002, 3.848029e-002, -1.624447e-002, -1.794451e-002, -2.493049e-002, -1.279931e-002, -3.320627e-002, 1.248785e-002, -4.650650e-002, 8.428602e-002, 5.693135e-002, 9.893393e-004, 2.739969e-003, 1.646524e-003, 1.032203e-002, 2.148487e-002, -1.375592e-002, -1.715550e-002, 5.028152e-002, -4.396515e-003, 1.221197e-003, -7.806875e-002, -3.981569e-002, -5.052430e-003, 7.197376e-003, -4.793042e-002, -1.528884e-002, 3.678046e-003, 1.585979e-003, 3.020703e-002, -4.097356e-002, 6.116403e-003, -2.042745e-002, 1.648615e-002, 2.226220e-002, 1.419365e-002, 1.410113e-003, -1.729266e-002, 2.461868e-002, 1.121727e-002, 5.643534e-003, -1.319839e-002, 4.697418e-002, 1.503473e-002, -1.407034e-002, -3.773683e-002, 7.221487e-003, 3.058092e-002, 3.270081e-002, 3.521807e-002, -3.439609e-002, 3.105318e-002, -3.033669e-002, 2.608969e-003, 2.953890e-002, 3.995350e-002, 2.011639e-002, 5.184120e-003, 3.195367e-002, -5.692090e-004, -6.530785e-003, 4.918311e-002, -3.404395e-002, 5.566959e-002, -1.025507e-002, 3.574659e-002, 4.084531e-002, 1.562352e-002, 3.069283e-002, 3.291718e-002, -1.649209e-002, -1.005329e-002, -2.278873e-002, 6.319461e-002, 2.846739e-002, 3.386046e-002, 1.620421e-002, -1.186915e-002, 1.295225e-002, 4.638107e-003, 6.205085e-003, 2.211832e-002, 8.685376e-003, 1.876870e-002, 3.186470e-002, 4.020361e-002, 1.959405e-002, -3.587520e-002, 2.058727e-002, -1.268481e-002, -5.122309e-003, -1.666010e-003, 9.664076e-003, 7.078500e-002, 3.245091e-002, 3.417947e-002, -2.302088e-002, -2.396739e-003, 8.143712e-003, 2.874321e-002, 8.311729e-003, 1.216091e-002, 1.370164e-002, 1.230931e-002, 2.567911e-002, 2.558485e-002, 1.164001e-002, 5.225939e-002, 2.764331e-002, -2.805427e-002, -1.820319e-002, 2.285085e-002,


© ISO/IEC 2004 — All rights reserved

Copyright International Organization for Standardization
Provided by IHS under license with ISO
No reproduction or networking permitted without license from IHS
Not for Resale

3.526942e-002, 7.402680e-003, 5.507366e-003, 2.876683e-003, 2.612577e-003, 1.533800e-002, 2.427401e-002, 3.803660e-002, 2.608912e-002, 2.767769e-002, 2.064538e-002, 1.562252e-002, 1.667002e-002, 2.484724e-003, 2.561403e-002, 2.626626e-002, -5.768993e-003, 5.412808e-002, 9.351285e-003, 3.027969e-002, -2.378149e-002, -2.689503e-002, 1.182373e-002, -1.709030e-002, 1.379720e-002, 4.341997e-002, 2.874452e-002, 9.713252e-003, 2.482454e-002, 1.507328e-002, 9.778548e-003, 3.105008e-002, 2.335377e-002, 1.937341e-002, 1.975634e-002, 3.896209e-002, 1.503636e-002, 2.986139e-002, 3.218952e-002, 3.076982e-002, 5.930065e-003, 6.000758e-002, 7.659370e-002, 4.497206e-002, -2.598837e-002, 6.163978e-003, -2.797815e-002, 2.143167e-003, -6.833368e-003, -9.877961e-003, -9.877961e-003, -6.833368e-003, 2.143167e-003, -2.797815e-002, 6.163978e-003, 1.645166e-002, 5.726410e-002, 8.007656e-003, 2.467596e-002, 8.774563e-002, 3.221475e-003, -2.285911e-002, -1.038419e-002, 3.478163e-002, -5.864975e-002, 5.440286e-002, 3.833118e-002, 5.631594e-002, 2.386445e-002, 4.493571e-003, -3.407684e-002, -1.884709e-002, -2.038860e-002, -3.190356e-002, 1.764772e-002, 7.819111e-003, -1.806779e-002, 1.280366e-002, 7.527972e-002, -3.497893e-002, -4.800878e-002, -4.038520e-002, -4.063817e-003, -8.400890e-003, -1.071455e-002, -2.380157e-002, -1.889320e-002, 6.327093e-002, 4.911210e-002, 7.840430e-002, -5.941911e-002, -5.033435e-002, -2.210119e-002, 1.091627e-002, -6.479270e-003, -2.307926e-003, -1.695674e-002, 9.191032e-003, 9.328835e-002, -3.262810e-002, 3.879208e-002, -1.187959e-002, -2.588468e-002, -1.376956e-003, -6.539808e-003, 7.022673e-004, -3.459071e-003, -7.824873e-005, -1.558826e-005, 4.476885e-002, -1.170157e-002, 2.548914e-002, -1.325050e-002, -7.842977e-003, -2.449726e-003, 6.480625e-003, 5.600015e-003, -7.711413e-004, 7.471821e-003, 8.438275e-003, 4.700521e-002, 7.870813e-003, 3.735941e-003, -6.124627e-002, -1.959422e-002, -1.910397e-003, 3.883354e-003, 3.883354e-003, -1.910397e-003, -1.959422e-002, -6.124627e-002, 3.735941e-003, -2.882632e-002, 6.067755e-002, -9.347370e-002, 5.133371e-002, 2.470303e-002, 1.250679e-003, 1.476235e-002, 2.347558e-003, -9.338954e-003, 2.778522e-002, 4.533133e-002, 5.607714e-002, 2.770298e-002, 8.717009e-002, 4.094915e-002, 2.968995e-002, 1.847330e-002, 9.586594e-004, 2.781396e-002, 5.141894e-002, -2.440707e-002, 2.581010e-002, 1.945420e-002, 4.806374e-002, 1.794829e-002, 8.296063e-003, 1.343859e-002, 1.125835e-002, -2.271832e-002, -2.246055e-002, -6.609455e-003, -4.397445e-002, 2.271234e-002, -1.489364e-002, 6.294742e-002, -1.115473e-002, -3.425412e-003, -3.026000e-004, 7.256729e-003, -1.330402e-002, -8.303103e-003, -2.442343e-002, -5.194397e-002, 5.166764e-003, -5.552796e-002, 4.276015e-002, 3.035443e-003, 5.384322e-003, 1.139110e-002, 3.479232e-003, 7.208867e-003, -4.483043e-003, -1.604396e-002, -1.650076e-002, 2.628873e-002, -3.324872e-002, 2.502564e-002, 1.778533e-002, 7.980599e-003, 1.024830e-002, 2.656700e-003, -1.977507e-003, -7.360803e-003, -7.707780e-003, -1.894133e-002, 5.119067e-003, 2.047408e-002, -3.625049e-002, -7.862001e-003, -2.371707e-002, -7.366111e-003, -5.513451e-002, -5.513451e-002, -7.366111e-003, -2.371707e-002, -7.862001e-003, -3.625049e-002, -1.003880e-002, 6.121391e-002, 3.975818e-002, 3.856472e-003, -6.572730e-002, -2.693612e-002, 7.852753e-003, -4.779267e-002, -1.600050e-002, -5.109007e-003, -3.084637e-002, 4.125056e-002, 6.515260e-002, -2.532307e-002, 1.220909e-002, 4.657996e-004, -1.743711e-002, -2.984873e-003, 2.691083e-002, 5.140295e-003, -7.349306e-002, 3.542035e-003, -3.878213e-003, 5.791664e-002, 4.479718e-002, 2.729849e-002, 1.926800e-002, -4.114259e-004, 2.527262e-003, 1.338740e-002, 4.028407e-004, 9.079349e-002, 4.334026e-002, 1.853693e-002, 1.584473e-002, 6.115933e-002, 1.837498e-002, 2.414917e-002, 1.486182e-002, 9.122797e-003, 1.539317e-002, 2.122483e-002, 3.144203e-002, 2.450864e-002, -5.094978e-002, 2.242130e-002, 4.214435e-002, 5.381282e-002, 1.911369e-002, 1.327560e-002, 1.065293e-002, 8.572384e-003, 1.657444e-002, 1.260388e-002, -1.061381e-003, -2.397638e-002, -1.011015e-002, 2.777109e-002, 4.602670e-002, 3.514354e-002, 1.519840e-002, 7.320411e-003, 1.036098e-002, 1.151827e-002, 9.362422e-003, -2.051367e-002, 3.579136e-003, -3.591028e-002, 1.380026e-002, -9.989199e-003, -4.330023e-002, -5.813223e-002, -5.813223e-002, -4.330023e-002, -9.989199e-003, 1.380026e-002, -3.591028e-002, -1.701776e-002, -4.724864e-002, 4.958101e-002, 9.057589e-003, 3.550668e-002, 1.881020e-002, 3.103420e-002, 2.580027e-002, -5.588924e-003, 3.094154e-002, 2.759476e-002, -3.908644e-002, -6.870096e-002, -9.048463e-002, -1.904902e-003, 1.533735e-003, 2.200673e-002, -2.433122e-002, -3.724789e-002, -1.434145e-002, 6.717427e-002, 3.610103e-003, -2.252844e-002, 3.474327e-002, -6.816542e-002, 2.525498e-002, 2.111071e-002, 2.136088e-002, -8.168830e-004, 6.808941e-003, 2.539802e-002, 5.841164e-002, 7.722996e-002, 5.813071e-002, -1.008362e-002, 4.098923e-002, 1.942979e-003, 5.854186e-003, 1.025604e-002, 1.676950e-002, 1.226929e-002, 4.560909e-002, 7.005348e-002, 1.903227e-002, -5.455026e-002, 2.730885e-002, 6.782337e-003, 8.641810e-003, 2.514005e-003, 7.747465e-003, 1.546080e-002, 2.590582e-002, 4.216141e-002, 3.926751e-002, 2.159666e-002, -1.065110e-002, -1.722083e-002, -5.095247e-003, -3.148408e-003, 9.075449e-003, 4.004189e-003, 1.931708e-002, 3.296798e-002, 3.456686e-002, 3.037660e-002, 1.528502e-002, 7.452187e-002, 4.516555e-002, 6.831950e-003, 6.831950e-003, 4.516555e-002, -8.435787e-002, -3.030872e-002, -1.410788e-002, -9.598665e-003, -3.024568e-002, -2.753936e-002, -1.334253e-002, -7.098839e-004, 3.172651e-003, -5.247915e-003, -3.947722e-002, 1.008876e-001, 4.496796e-002, 4.496796e-002, 1.008876e-001, -4.854086e-002, 2.512431e-002, 4.408381e-003, 4.570328e-003, 3.724266e-003, -3.958575e-003, -2.362950e-002, -1.905027e-003, -1.190787e-003, 1.234914e-003, -2.123373e-002, 1.008778e-001,

© ISO/IEC 2004 — All rights reserved


Copyright International Organization for Standardization
Provided by IHS under license with ISO
No reproduction or networking permitted without license from IHS
Not for Resale

3.282562e-002, 3.282562e-002, 1.008778e-001, 5.454909e-002, -1.427918e-004, 1.154483e-003, 5.035106e-003, 2.014970e-002, -3.507814e-002, -7.958124e-003, -2.946247e-003, -4.874356e-003, -2.597534e-002, -3.893268e-003, 3.806484e-002, 6.751598e-003, 6.751598e-003, 3.806484e-002, -4.928643e-002, 2.654137e-002, 2.347120e-002, 3.103294e-002, -3.592782e-002, -3.797119e-002, 3.714639e-003, 5.502630e-003, -6.693049e-003, 9.376961e-003, 3.938762e-002, -5.509987e-003, 2.275556e-002, 2.275556e-002, -5.509987e-003, 3.991178e-002, -3.815873e-003, 8.777268e-004, -3.976901e-003, -6.728166e-003, 1.751919e-002, -2.746450e-003, -6.353515e-003, 2.763651e-003, 6.196123e-004, -1.004206e-001, 2.384049e-004, 3.133847e-003, 3.133847e-003, 2.384049e-004, 2.623899e-002, -4.172599e-003, -1.070613e-002, -1.091217e-002, 3.266461e-004, 5.154163e-002, 1.112913e-002, -8.884593e-003, -9.067904e-003, -8.641123e-003, -3.771596e-002, -4.839519e-002, 1.186870e-002, 1.186870e-002, -4.839519e-002, 1.041593e-002, -2.405796e-003, -2.989458e-004, -1.092058e-002, -1.167544e-002, 1.763860e-002, -7.373296e-003, -1.818543e-003, -1.146519e-002, 1.739502e-003, 7.071377e-002, 9.056641e-002, 2.185380e-002, 2.185380e-002, 9.056641e-002, 2.494135e-003, 2.126411e-002, 7.341230e-003, -6.344054e-003, -3.141158e-004, -1.268167e-003, 4.971270e-003, 8.249109e-004, -8.234220e-003, -1.004623e-002, 2.266154e-002, 2.756052e-002, 5.114214e-002, 5.114214e-002, 2.756052e-002, 1.286469e-001, 5.099825e-002, 7.894826e-003, 2.052862e-002, 4.677730e-002, 4.911969e-002, 2.724840e-002, 1.059695e-002, 1.501025e-002, 2.902855e-002, 1.001290e-001, -5.044987e-002, -2.499146e-002, -2.499146e-002, -5.044987e-002, -2.423255e-001, -1.005587e-001, -3.232417e-002, -2.759360e-002, -2.638799e-002, 3.894940e-002, -1.981059e-002, -8.507113e-003, -7.865605e-004, 2.360488e-002, -3.675167e-006, -5.780355e-002, -2.116651e-002, -2.116651e-002, -5.780355e-002, -2.565851e-001, -3.145879e-002, -2.394988e-002, -3.414093e-002, -9.489096e-002, 3.068065e-002, 2.616330e-002, -1.749520e-004, -1.112955e-002, -2.754068e-002, -2.126091e-002, -1.315301e-002, -1.838708e-002, -1.838708e-002, -1.315301e-002, 9.593772e-002, 4.682167e-002, 1.648629e-002, 6.745038e-003, 2.867436e-002, 4.448893e-002, 1.959130e-002, 2.175009e-002, 1.255489e-002, 2.525396e-002, -8.873539e-002, 4.610160e-002, -2.776253e-002, -2.776253e-002, 4.610160e-002, 4.021563e-002, 1.262043e-001, 1.439289e-002, 2.049675e-002, 4.890108e-002, -2.519247e-002, 6.875866e-002, 3.201775e-002, 1.336099e-002, 2.360814e-002, -1.358104e-002, 7.789939e-003, -1.385722e-002, -1.385722e-002, 7.789939e-003, 7.382169e-002, -1.124195e-002, -8.456362e-003, -1.444105e-002, -4.443881e-002, 2.087595e-002, -1.120368e-002, -1.366925e-002, -7.290331e-003, 2.343444e-003, 5.119140e-002, -2.489995e-002, -1.464013e-002, -1.464013e-002, -2.489995e-002, 5.011923e-002, -7.156261e-002, -1.668954e-002, -1.689044e-002, -1.696411e-002, 7.313373e-003, -1.179298e-002, -7.670945e-003, -1.024090e-002, -1.913070e-002, -2.634768e-002, 2.683959e-002, 2.026758e-003, 2.026758e-003, 2.683959e-002, 8.382049e-002, 1.004097e-002, 1.331345e-002, 1.223558e-002, 1.398625e-001, 2.854120e-002, 5.290017e-003, 3.601281e-003, 3.430296e-002, 8.949030e-002},
{1.328773e-002, -8.342054e-003, -2.305127e-002, 9.965351e-003, -2.187555e-002, -3.683826e-003, -1.140475e-002, 5.623895e-004, 1.722965e-002, -2.192785e-002, 1.976595e-003, 2.023667e-002, 1.976595e-003, -2.192785e-002, 1.722965e-002, 5.623895e-004, -1.140475e-002, -3.683826e-003, -2.187555e-002, 9.965351e-003, -2.305127e-002, -8.342054e-003, -4.108815e-002, 2.945942e-002, -1.145102e-002, 2.938865e-003, 2.538904e-002, 3.331085e-002, 1.921640e-002, 4.070375e-002, -6.021050e-003, 1.127707e-002, -1.111126e-002, 2.337997e-002, 2.648225e-002, 2.334745e-002, 3.354197e-002, 5.072935e-002, 1.653139e-002, 1.997953e-002, 2.533986e-002, 1.098713e-002, -1.834761e-002, 2.206613e-002, -9.270714e-003, -1.632929e-002, -1.185317e-002, -4.602777e-002, 6.600828e-003, 2.619730e-003, 1.938911e-002, -8.805453e-003, 2.047940e-002, 1.698612e-002, 9.490172e-003, -2.835682e-003, -1.466359e-002, 4.009553e-002, 1.384009e-002, 1.356760e-002, -2.016135e-002, 1.216585e-002, -2.561416e-003, -2.041983e-002, -1.286110e-002, 1.354252e-003, -2.011656e-002, -1.230952e-002, 7.990202e-003, -2.249155e-002, -3.089130e-002, 4.539345e-003, -5.385029e-003, -1.094810e-002, -2.798816e-002, 1.194585e-002, -7.874630e-002, -2.817221e-002, -3.875507e-002, -1.164721e-002, -4.770290e-002, -6.566729e-002, -1.374079e-002, -2.294259e-002, -9.967196e-004, -3.528453e-002, -6.270120e-003, 4.926848e-003, 5.048238e-002, 1.671529e-003, 2.050070e-002, 4.733705e-002, -2.458664e-002, -2.514005e-002, -2.946988e-002, -1.597855e-002, -3.161570e-002, -5.739895e-002, -5.148559e-002, -6.325479e-002, -4.944048e-002, 3.565085e-003, -4.094701e-002, -3.206942e-003, -4.624128e-002, -5.538270e-003, -2.508745e-002, 1.640042e-002, 3.555735e-002, 1.175391e-002, -2.136206e-003, -8.372182e-003, -1.526286e-003, -6.234673e-003, 4.481014e-002, 5.567448e-003, -2.026984e-002, -5.477401e-003, -2.534279e-002, -1.957649e-002, 2.244358e-002, 3.270317e-003, -5.018406e-002, -1.014221e-002, 2.066155e-002, -6.084898e-003, -4.571448e-002, 3.330636e-003, -1.837700e-002, 1.556355e-002, 5.620688e-004, 8.036426e-003, 2.742172e-002, -2.048353e-002, -1.229226e-002, -2.036109e-002, 1.159831e-002, 2.119856e-003, -5.672000e-002, -3.571072e-002, 1.126302e-002, 3.588025e-002, -1.362031e-002, -2.522218e-002, -3.022932e-002, -4.972069e-002, -1.823734e-002, -6.285760e-002, -2.206487e-002, 1.522060e-003, 2.452685e-002, -2.759495e-002, -6.072349e-003, -4.858438e-002, -4.099878e-002, -5.724949e-003, -4.411367e-002, -3.410188e-002, -1.692796e-002, -4.807121e-003, -3.803566e-002, -8.181642e-002, -8.066016e-002, -5.291870e-002, -2.544671e-002, -2.877060e-002, -2.800190e-002, -2.695864e-002, -3.876879e-002, -4.160005e-002, -7.105076e-002, 2.966957e-002, -3.787849e-002, -1.443913e-002, 1.893276e-003, 1.766512e-002, -


© ISO/IEC 2004 — All rights reserved

Copyright International Organization for Standardization
Provided by IHS under license with ISO
No reproduction or networking permitted without license from IHS
Not for Resale

3.523064e-002, 9.523078e-003, -1.541858e-002, 1.861967e-003, -4.806401e-002, -1.006602e-002, 3.376223e-004, -1.807174e-002, -8.639103e-003, -1.666750e-002, -4.448310e-002, -2.411364e-002, -6.895345e-003, -6.058386e-003, -3.022476e-002, -9.744678e-004, -2.385172e-002, -5.324688e-002, 3.073781e-002, -1.538967e-002, -2.083780e-002, -3.825904e-004, -1.728870e-002, -3.672690e-002, -2.997813e-003, 1.080192e-002, 9.452611e-003, -1.136929e-002, 4.893218e-002, -1.436827e-002, -2.650613e-002, -3.639048e-002, -4.454262e-002, -1.946486e-002, -4.844519e-002, -4.580588e-002, -4.393225e-003, -2.543212e-002, 9.649893e-003, -8.600451e-002, -6.525011e-003, -5.002673e-002, -4.780751e-002, -6.546953e-003, -2.472278e-002, -5.768032e-003, -3.664446e-002, 1.761659e-002, -9.993886e-003, -3.919878e-002, 7.305938e-003, -3.871781e-002, -3.224502e-002, -4.936127e-002, -3.285663e-002, -3.848125e-002, -2.494754e-002, -4.757646e-002, -5.632500e-002, -4.216876e-003, 6.486902e-003, 1.897964e-003, 7.697452e-003, -5.363569e-002, 3.569694e-003, -4.162698e-002, -3.110933e-002, 8.693401e-002, -5.693480e-002, -5.873094e-002, -3.106466e-002, -5.863031e-002, -6.145452e-002, -3.789252e-002, -3.496329e-002, -4.096236e-002, -3.603517e-002, -3.878139e-002, -3.823454e-002, -3.830367e-002, -2.938628e-002, -4.031678e-002, -4.475225e-002, -2.188988e-002, -1.565751e-002, 2.980953e-002, -8.727642e-003, 5.233674e-002, 1.425593e-002, 9.108561e-003, -6.475461e-002, -5.953038e-002, -6.254286e-002, -3.364879e-002, -3.346962e-002, -3.188905e-002, -3.908854e-002, -2.749307e-002, -1.986575e-002, -1.860571e-002, -3.130391e-002, -1.668645e-002, -3.509977e-002, -1.609961e-002, -1.625826e-002, -5.095510e-002, -4.241054e-002, -4.556649e-002, 2.245309e-002, 2.813457e-002, -1.851958e-002, -6.179231e-002, -3.161375e-002, -4.735592e-002, -3.543661e-002, -4.052323e-002, -4.010683e-002, -2.152119e-002, -2.533431e-002, -2.051176e-002, -2.114567e-002, -2.404573e-002, -1.073022e-002, -2.653071e-002, -1.954353e-002, -1.737056e-002, -3.077820e-002, -2.434562e-002, 1.025244e-003, -1.759432e-002, 2.139978e-002, 2.364398e-002, -4.793173e-003, 1.050270e-002, 2.551313e-002, 9.659103e-003, -2.774285e-003, -3.551864e-003, -3.551864e-003, -2.774285e-003, 9.659103e-003, 2.551313e-002, 1.050270e-002, 8.621535e-003, -6.766961e-002, -5.036513e-002, 5.134845e-002, -7.718494e-002, -3.089684e-002, 1.611404e-002, 4.673426e-002, 6.982052e-002, -3.875689e-002, -1.001527e-002, -3.290508e-002, -1.016751e-002, -3.255939e-002, 4.105585e-002, 6.102014e-002, 2.218441e-002, 5.082041e-004, 2.139891e-003, 2.962830e-002, 6.729994e-002, -4.726660e-002, 9.365526e-002, 6.479559e-002, 1.303399e-002, 1.665651e-002, 1.313233e-002, 2.034702e-003, -6.999417e-003, -6.154051e-003, -9.939252e-003, 3.785986e-002, 3.701044e-002, 7.430592e-002, 5.538453e-002, 8.048078e-003, -7.950162e-003, -8.299635e-003, -6.392010e-003, -3.520633e-003, -6.799298e-003, -1.680530e-002, -9.141046e-003, 7.584724e-002, -3.064573e-002, -3.345977e-003, -1.540390e-002, -2.288296e-002, -1.993229e-002, -2.482374e-002, -8.832439e-003, -3.658721e-003, -1.555925e-003, -5.108405e-003, 4.193703e-003, -5.346356e-003, -9.142249e-003, -9.282298e-003, -2.073595e-002, -2.517671e-002, -1.514577e-002, -7.766575e-003, -1.456364e-003, 2.444253e-003, -5.282242e-003, -1.469327e-002, 5.889548e-003, -6.789688e-003, 5.344023e-002, -1.341879e-003, 4.325715e-002, 2.811791e-003, 2.811791e-003, 4.325715e-002, -1.341879e-003, 5.344023e-002, -6.789688e-003, 1.398502e-002, -2.285765e-002, 5.248534e-002, 1.495539e-001, 8.407188e-002, 4.769031e-002, 5.480407e-003, -2.022927e-002, -6.506965e-003, 2.255123e-002, -6.852693e-002, -1.344344e-002, -2.119843e-002, -7.960957e-002, -3.838807e-002, -2.880994e-002, -2.669618e-002, -2.051710e-002, 2.140953e-002, -8.118075e-003, 8.975418e-002, -1.567306e-002, -1.017957e-002, -4.367804e-002, 2.633705e-002, -1.374401e-002, -2.416686e-002, -1.660549e-002, -2.121943e-002, -4.175216e-002, -3.641938e-002, -8.594021e-003, 2.109510e-002, 6.278267e-002, 3.085000e-002, -1.087703e-002, -5.570282e-003, -1.356320e-002, -1.159716e-002, -1.562403e-002, -1.037774e-002, -2.275756e-002, -3.908273e-002, 3.575273e-002, -7.963746e-003, 1.484189e-002, -2.726951e-002, -9.394729e-003, -1.611161e-002, -7.795847e-003, -2.763117e-002, -2.697855e-002, -5.608407e-003, -2.486582e-002, 3.435003e-002, -5.603470e-002, -2.756393e-002, -1.961294e-002, -1.512138e-002, -1.527822e-002, -8.628284e-003, -9.100646e-003, -1.312806e-002, -1.059614e-002, -3.375476e-002, 1.996416e-002, 1.053984e-002, 6.984530e-004, 3.827081e-003, -1.736334e-003, 3.353264e-003, 8.945906e-003, 8.945906e-003, 3.353264e-003, -1.736334e-003, 3.827081e-003, 6.984530e-004, -1.748302e-002, -4.067697e-002, -2.510471e-002, 1.139580e-003, 3.923215e-002, 7.095570e-003, -2.402755e-002, -3.418926e-002, 2.224793e-002, 8.656617e-002, -3.295044e-002, -2.912517e-002, -1.759850e-002, 1.423694e-002, -8.763093e-003, -1.308999e-002, -2.409066e-003, -4.158197e-002, -3.878379e-003, -1.044687e-002, 3.429393e-002, -5.391852e-002, 6.241689e-002, -1.482638e-002, -3.377118e-003, -2.631116e-002, -1.330632e-002, -2.770587e-003, -1.164581e-002, -5.460073e-004, -1.714354e-002, -2.471466e-002, -5.600515e-002, 1.321241e-001, 1.979380e-002, -1.843786e-002, -6.332574e-003, -1.417512e-002, -1.361717e-002, -1.370584e-002, -1.388151e-002, -1.293036e-002, 3.900089e-002, 1.481804e-002, 1.113779e-001, -7.274340e-003, 6.321918e-003, -2.730708e-003, -9.268194e-003, -1.585449e-002, -8.212980e-003, -1.252318e-002, -1.092692e-002, 3.103978e-003, 2.439756e-002, 4.512933e-002, -3.453617e-003, -1.719550e-002, -2.963468e-003, -6.324268e-003, -1.518407e-002, -6.764038e-003, -8.424268e-003, -8.304776e-003, -3.990829e-003, 2.510699e-002, 1.651521e-003, 1.095052e-003, 2.023925e-002, -7.393783e-003, 5.165708e-002, 4.732857e-004, 4.732857e-004, 5.165708e-002, -7.393783e-003, 2.023925e-002, 1.095052e-003, -3.515068e-002, -2.783318e-002, 6.402710e-002, -1.075399e-001, -3.551014e-002, -3.043397e-002, -1.239275e-002, 6.956219e-003, -2.595253e-003, 5.859567e-003, -

© ISO/IEC 2004 — All rights reserved


Copyright International Organization for Standardization
Provided by IHS under license with ISO
No reproduction or networking permitted without license from IHS
Not for Resale

5.424179e-002, 7.333016e-002, -6.458253e-002, -9.537854e-003, -3.058426e-002, 8.319629e-003, -1.060965e-002, -2.630607e-003, 2.194006e-002, 2.380665e-002, -4.758648e-003, -2.341677e-002, 1.486726e-002, -2.984459e-002, 7.829322e-002, -9.219486e-003, -1.763154e-002, -9.006294e-003, -3.967370e-003, 9.725550e-003, -1.051022e-002, -2.749099e-002, -2.995412e-002, 1.069013e-001, 1.929164e-002, 2.380535e-002, 2.308249e-003, -9.510198e-003, -1.372179e-002, -5.610058e-003, -9.046903e-003, -2.589269e-003, -1.677398e-002, -2.636497e-002, 1.014058e-001, 2.280142e-002, 1.369596e-003, 5.749105e-003, -8.843564e-003, -4.968906e-003, -1.401891e-002, -1.220435e-002, -5.044596e-003, -1.843826e-002, -7.187967e-003, 6.829601e-002, 5.887864e-003, -2.723795e-003, 2.263253e-003, -7.114409e-003, -1.133979e-002, -1.650229e-002, -1.202444e-002, -8.836861e-003, -1.065171e-002, 2.071271e-002, 6.014732e-002, 4.360253e-002, 3.079943e-003, 3.079943e-003, 4.360253e-002, -1.220890e-001, 3.937862e-002, 5.581323e-002, 2.120457e-002, 7.701089e-002, -6.886419e-002, 2.852336e-002, -7.463220e-003, 7.690053e-003, 2.571035e-002, -1.400865e-001, -1.116274e-001, -3.292040e-002, -3.292040e-002, -1.116274e-001, 1.172849e-003, -1.128671e-001, -2.996608e-002, -1.047570e-002, -2.046213e-002, -1.254558e-002, -1.871286e-002, -7.526631e-003, -7.989604e-004, -2.319376e-003, -1.368742e-001, -8.656894e-002, -2.754603e-002, -2.754603e-002, -8.656894e-002, 5.381448e-002, -2.559532e-002, -1.597425e-002, -2.165406e-002, -6.237384e-002, 8.445254e-003, -9.468768e-003, -3.999575e-003, -7.861390e-003, -2.346761e-002, 5.280417e-002, -2.145873e-002, 3.085086e-002, 3.085086e-002, -2.145873e-002, -4.189811e-002, 2.824612e-002, 1.740811e-002, 3.197101e-002, 4.793894e-002, -1.467954e-002, 1.031015e-002, 5.934646e-003, -1.547827e-002, 1.173386e-002, 6.959748e-002, 2.171657e-003, 1.936154e-002, 1.936154e-002, 2.171657e-003, -4.396116e-002, 2.221307e-003, -2.025497e-002, -6.351860e-004, 1.953240e-002, -1.742582e-003, -8.153090e-003, -5.662653e-003, -3.370912e-003, 3.845641e-003, 5.548543e-003, 2.129843e-002, 1.563535e-002, 1.563535e-002, 2.129843e-002, 5.232409e-002, 2.684794e-002, 2.160674e-003, 3.419294e-003, -1.621722e-002, 5.068822e-002, 1.512759e-002, 1.713766e-003, 3.325602e-003, -1.189440e-002, -1.256771e-002, -9.049843e-002, -4.252384e-004, -4.252384e-004, -9.049843e-002, 7.792644e-002, -4.293906e-002, 3.199897e-003, -1.182847e-002, 6.293633e-003, 2.683894e-002, 1.052136e-004, -9.294256e-003, -5.394736e-003, 1.079035e-003, 1.025273e-001, 2.786324e-002, -2.181556e-002, -2.181556e-002, 2.786324e-002, -6.322475e-002, -2.434203e-002, 1.076907e-003, -9.607242e-004, -2.012313e-002, -3.017806e-003, -1.072871e-002, -2.650378e-003, -6.115859e-003, -2.737267e-002, -1.488586e-002, 2.686503e-002, -6.005258e-002, -6.005258e-002, 2.686503e-002, -1.034911e-001, -2.266568e-002, -2.420727e-002, -1.619272e-002, -5.099527e-002, -4.348130e-002, -1.888012e-002, -1.403015e-002, -1.794077e-002, -2.126666e-002, 1.244546e-001, -3.099076e-003, 3.008987e-003, 3.008987e-003, -3.099076e-003, -5.824396e-002, -1.666355e-002, -4.178312e-003, -1.685398e-003, 1.310715e-002, 5.091904e-002, 3.165549e-003, -2.240444e-003, 7.152680e-003, 2.473002e-002, 4.564661e-002, 3.739279e-002, 5.943939e-003, 5.943939e-003, 3.739279e-002, -8.395234e-002, -1.124602e-002, -8.663231e-003, -1.550534e-002, -3.557423e-002, 2.254183e-002, 1.282495e-002, -2.105487e-003, -8.519008e-003, -9.947841e-003, -6.976947e-002, 2.822082e-003, -2.348800e-002, -2.348800e-002, 2.822082e-003, -4.351093e-002, -3.006786e-002, -1.317762e-002, -1.449338e-002, -8.801017e-003, -1.942066e-002, 6.301199e-004, -6.212488e-003, -6.423579e-003, -8.283361e-003, -3.843465e-002, 8.397340e-003, 5.846151e-002, 5.846151e-002, 8.397340e-003, -3.513050e-002, 3.234238e-002, 1.486566e-002, 1.718011e-003, 2.695017e-002, 2.854134e-002, 6.885755e-003, -1.370464e-002, -7.178017e-003, 2.524233e-003, -6.059426e-002, 3.128074e-002, 7.642448e-003, 7.642448e-003, 3.128074e-002, 1.231256e-001, 9.631606e-003, 7.875442e-003, 1.242737e-002, 4.932004e-002, 5.333635e-002, 1.031934e-003, -3.229845e-003, -3.751742e-003, 2.830672e-004, 4.743371e-002, 5.608652e-002, 2.979972e-002, 2.979972e-002, 5.608652e-002, 1.464816e-001, 7.326429e-002, 1.334099e-002, 1.439748e-002, 3.680449e-002, 4.259865e-002, 1.606663e-002, 1.198057e-003, 4.927905e-003, 5.538588e-003, -2.165933e-002, 5.939737e-003, -9.254110e-003, -9.254110e-003, 5.939737e-003, -3.202632e-002, 9.067828e-003, 8.807278e-003, 1.412513e-002, 2.045912e-002, 2.072636e-002, 3.718854e-003, -8.871177e-003, 2.384803e-003, -8.365765e-003},
{1.108837e-003, 4.273124e-003, -6.768926e-003, 5.089574e-003, 8.843877e-003, 7.738483e-003, -2.853298e-003, 4.034287e-003, -1.044408e-002, 8.880232e-003, -2.662595e-003, 7.908524e-003, -2.662595e-003, 8.880232e-003, -1.044408e-002, 4.034287e-003, -2.853298e-003, 7.738483e-003, 8.843877e-003, 5.089574e-003, -6.768926e-003, 4.273124e-003, 2.661709e-002, 2.689162e-003, 2.639039e-003, 1.255707e-003, 9.110450e-003, -6.579546e-003, 5.836013e-004, -2.307548e-002, 2.817299e-002, -9.105785e-003, 4.271311e-004, -1.157660e-002, -4.765146e-003, 1.520214e-002, 3.191490e-003, 2.058306e-002, -2.005517e-003, 9.770559e-003, 8.367171e-003, -1.222422e-002, -1.139829e-002, 6.910467e-003, 2.049956e-002, -1.701158e-002, 4.757565e-003, 2.535326e-003, 3.408500e-003, 6.070060e-003, 9.762991e-003, 1.028926e-002, 1.577424e-002, 5.708220e-003, -1.417760e-002, 1.319871e-002, 3.958670e-002, -1.672605e-002, 2.319977e-002, 3.903942e-002, -1.935567e-002, 2.105199e-002, 1.748022e-002, -6.694358e-003, 1.503684e-003, 2.038123e-002, 1.426125e-002, -3.217734e-002, 5.264705e-003, 1.164447e-002, -3.715119e-003, 8.899692e-003, -1.396421e-002, 1.357881e-002, 1.376487e-002, -3.368001e-002, -3.541968e-002, -1.081569e-002, 1.777769e-002, 3.071047e-002, 1.637205e-002, 2.587922e-002, -2.490018e-002, 1.436624e-002, -2.138043e-002, 2.018487e-002, -3.444171e-002, -2.021178e-003,


© ISO/IEC 2004 — All rights reserved

Copyright International Organization for Standardization
Provided by IHS under license with ISO
No reproduction or networking permitted without license from IHS
Not for Resale

5.795701e-002, -7.049045e-003, -5.292608e-003, 7.787426e-003, 1.931488e-002, 7.248692e-003, -1.283862e-002, -1.760977e-002, -2.987469e-002, -2.023229e-002, 1.974974e-002, 1.348422e-003, -3.656240e-002, -6.175549e-004, 9.741721e-004, -3.285430e-003, -3.136362e-002, 1.091171e-002, -2.284509e-002, 4.672647e-003, -2.368972e-002, -3.111655e-002, -7.699970e-003, -3.563852e-002, -1.047765e-002, -3.369140e-002, 1.883358e-002, 4.680200e-003, 4.402218e-003, -1.162489e-002, -8.810639e-003, -3.775140e-002, -2.417933e-002, -3.048801e-002, -3.452192e-002, 2.547229e-002, 7.287278e-003, -1.512015e-002, 1.029089e-002, 6.501332e-002, -2.635443e-002, -1.501549e-002, 1.342900e-002, 2.883189e-002, 3.957210e-002, -3.715453e-002, -3.184903e-002, -3.524411e-002, -2.380004e-002, -9.435023e-003, 2.411875e-002, -1.031759e-002, 4.015831e-002, 2.491503e-002, 8.022833e-003, -3.652465e-003, 9.011835e-003, 2.638409e-002, -1.785979e-002, -7.370743e-003, 3.184088e-002, -3.253948e-002, -2.863107e-002, -2.866278e-002, -4.343662e-002, 3.280707e-002, -2.193163e-003, -1.777440e-002, -6.081843e-003, -8.035295e-003, -2.307495e-002, -2.637672e-002, -6.104375e-002, 1.044052e-003, -1.293219e-004, 2.563138e-002, 3.342620e-002, 1.613116e-002, 2.277251e-002, 1.278365e-002, 1.280607e-002, -1.739155e-002, -2.865261e-002, 1.772467e-003, -4.534305e-002, -4.435644e-002, -1.558362e-002, -1.548990e-002, 6.289784e-003, -3.726701e-002, 6.911403e-003, 1.629282e-002, 2.837641e-002, -5.779225e-003, 1.221887e-002, 1.421670e-002, 3.821464e-002, 1.663080e-002, 6.185888e-004, 2.335127e-003, 2.786109e-002, 3.241599e-002, 6.018580e-003, -4.018977e-002, -3.153790e-003, 1.310761e-002, 1.068749e-003, -2.128504e-002, 3.461183e-002, -3.089252e-002, -2.723912e-002, -3.053095e-002, -4.668574e-002, -1.830557e-002, -2.160475e-002, 2.758925e-003, 3.167418e-002, 8.961899e-003, -7.893544e-004, 1.908517e-002, 2.066754e-002, 9.411151e-003, 1.651629e-002, 7.488958e-003, -1.693091e-002, 2.414435e-003, -1.991062e-002, 2.322840e-002, 2.180792e-002, -4.071168e-002, -2.606147e-002, 3.687963e-002, 2.920983e-003, -3.387266e-002, -2.130514e-002, 5.352695e-002, -3.420132e-002, -2.607473e-002, -8.019638e-003, -7.189149e-003, -1.628544e-002, -4.700703e-003, 1.192151e-002, 6.935753e-003, -1.768029e-003, 1.277284e-002, 1.031429e-003, -2.486538e-002, -1.893455e-002, -4.800511e-003, -3.856658e-002, 1.124611e-002, -5.212368e-002, 8.587578e-003, -1.433170e-002, -7.187246e-003, 1.699031e-002, -3.483098e-002, -2.141299e-002, -2.243121e-002, -1.963237e-002, -2.265489e-002, -7.806106e-003, 1.234400e-002, 1.439318e-002, 1.149737e-003, 1.018700e-002, 9.365140e-003, -3.826942e-003, -1.760243e-002, -4.176933e-002, -4.722348e-002, 1.220751e-002, -1.791049e-002, 1.860532e-002, 1.810272e-002, -3.921553e-003, 5.647084e-003, -1.740320e-003, -2.305714e-002, -4.940061e-002, -5.218510e-002, -1.905829e-002, -1.231879e-002, -5.573008e-003, -1.809996e-003, 2.138890e-003, 2.187108e-003, 1.364261e-003, -6.634108e-003, 1.648426e-003, 2.632047e-003, 7.380841e-003, -2.049345e-002, -3.419352e-002, -2.428347e-002, 1.583288e-002, -2.841548e-002, -1.895291e-002, 2.984845e-003, -5.431051e-002, -5.242495e-002, 6.638363e-004, -3.443447e-002, -6.725967e-003, -1.710464e-002, -1.535015e-002, -1.057979e-002, -1.399269e-002, -5.639195e-003, -1.215515e-002, 5.725791e-003, -8.549516e-003, -2.468795e-002, -2.273970e-002, -1.973066e-002, -1.853714e-002, -3.153805e-002, -1.420607e-002, -1.905660e-002, 2.678483e-002, 8.131119e-003, -2.016770e-002, -1.263867e-002, -1.696597e-002, 2.430886e-003, 2.430886e-003, -1.696597e-002, -1.263867e-002, -2.016770e-002, 8.131119e-003, 2.716155e-002, 1.495459e-001, 7.547401e-002, 4.025838e-002, -9.567346e-003, 1.320563e-002, 1.974210e-002, 5.335527e-002, 8.692771e-003, -4.795926e-002, -1.034332e-006, -5.525419e-002, 1.070986e-002, -3.608502e-002, -1.457784e-002, -2.541737e-002, -1.688067e-002, 4.421344e-003, 2.180237e-002, 3.971385e-002, 2.571056e-002, 7.472761e-003, 4.243663e-002, 1.065852e-001, 4.309479e-002, 1.171323e-002, 1.565972e-002, 1.365430e-002, 1.185498e-002, 1.434597e-002, 2.101131e-002, 3.938185e-002, -6.684203e-002, 4.905183e-002, -1.312205e-003, 6.092564e-002, 5.225425e-003, 4.849023e-003, -7.023443e-004, 9.434080e-003, 4.897351e-003, 6.858937e-003, -7.518632e-003, 1.100618e-003, -9.208105e-003, 8.201128e-003, 1.266562e-002, -5.419800e-003, -1.307268e-003, 3.158637e-003, 1.369360e-004, 3.049228e-003, 7.492567e-003, -1.779537e-002, 2.006607e-003, -2.648241e-002, -1.214495e-002, -4.679689e-002, -1.399262e-002, -5.731341e-003, 3.928809e-003, -3.417559e-005, 5.812756e-003, 3.013406e-003, -6.983893e-003, -8.378191e-003, 1.870211e-002, 1.157756e-002, -5.540650e-002, -7.977848e-003, -3.622429e-003, 2.040568e-003, 2.040568e-003, -3.622429e-003, -7.977848e-003, -5.540650e-002, 1.157756e-002, 6.513407e-002, 5.030834e-002, -5.890389e-002, 3.750884e-002, 2.514281e-002, -1.149815e-002, -1.486676e-002, -5.992667e-002, -1.894112e-002, 3.067277e-002, 6.612841e-002, 6.369184e-003, 2.515691e-002, 4.511973e-002, 4.377925e-002, 3.832142e-002, 1.238926e-002, 1.773649e-003, -1.234596e-002, -3.785345e-002, 5.319935e-002, 1.632387e-002, -2.874478e-002, -9.858677e-002, 3.125575e-002, 1.974534e-002, 2.597352e-002, 1.220696e-002, 1.060315e-002, 1.034722e-002, 1.388036e-002, 5.609575e-002, 6.489713e-002, 2.161639e-002, -3.463688e-003, -3.820120e-003, 1.691821e-002, 1.099053e-002, 5.215210e-003, 1.047254e-002, 4.961396e-003, -3.425937e-003, 3.169190e-002, -2.920258e-002, -2.964416e-003, -5.277520e-003, -1.484297e-002, 7.387166e-003, 5.735291e-003, 4.402135e-003, 1.353008e-002, 1.405120e-002, -1.690354e-002, 1.715357e-003, -6.922472e-003, -5.322674e-002, -1.410380e-002, -2.093829e-003, 6.077916e-003, 7.170535e-003, 2.359264e-003, 8.598267e-003, 1.203499e-002, -1.836497e-003, -3.436130e-002, -1.192990e-002, -2.373506e-002, -5.925632e-003, 2.594522e-002, 1.905861e-003, 1.715062e-002, -8.506292e-005, -8.506292e-005, 1.715062e-002, 1.905861e-003, 2.594522e-002, -

© ISO/IEC 2004 — All rights reserved


Copyright International Organization for Standardization
Provided by IHS under license with ISO
No reproduction or networking permitted without license from IHS
Not for Resale

5.925632e-003, -2.648387e-002, -3.400103e-002, -1.089497e-003, -3.159247e-002, -2.300063e-002, -1.519419e-002, -2.623786e-002, -4.635392e-002, -5.404075e-002, -2.153626e-002, 1.939274e-002, -7.557731e-002, -3.315247e-002, -8.612001e-002, -2.311330e-002, -3.527368e-003, -2.618027e-002, -3.375217e-002, -2.502296e-002, -7.573376e-002, 3.279692e-002, -1.118470e-002, 2.301556e-002, 5.616705e-003, -5.624673e-002, -2.883537e-002, 9.748207e-003, -2.711315e-003, 1.945877e-003, 6.431893e-003, 1.771407e-002, 7.204864e-002, 2.741554e-002, 2.153168e-002, 1.017561e-002, -2.370252e-002, -2.790374e-002, 5.142513e-003, 1.642979e-002, 3.018441e-003, 3.090780e-003, -1.746471e-002, 1.903115e-002, 1.266130e-001, 3.970816e-002, 3.720097e-002, -1.546501e-002, -2.170971e-002, -1.572329e-002, -2.395385e-004, 5.066191e-003, 1.600858e-003, -9.791947e-003, 2.376501e-002, 3.816582e-002, 4.710989e-002, 1.631319e-003, -9.018049e-004, -1.742825e-002, -1.283195e-002, -1.140720e-002, 1.944800e-003, 4.948180e-003, -4.994772e-003, 1.237244e-002, 3.445725e-002, -2.064305e-002, -1.018281e-002, 3.966421e-002, -1.345412e-002, -2.065797e-002, 5.030228e-003, 5.030228e-003, -2.065797e-002, -1.345412e-002, 3.966421e-002, -1.018281e-002, 3.569366e-002, -6.274433e-003, -8.095758e-002, -4.605931e-002, -4.286243e-002, -3.002364e-002, 3.589708e-003, 1.513712e-002, 3.344982e-002, -5.980373e-003, -4.157281e-002, -9.673345e-002, -2.254056e-002, 2.451722e-002, -1.348216e-002, -4.941022e-003, -1.501851e-002, -2.676743e-003, 3.945053e-002, 3.568896e-002, -1.315776e-002, -5.311185e-002, -2.929332e-002, 7.151432e-002, 7.889622e-002, 7.825997e-003, 5.751597e-003, 1.433223e-002, 1.055789e-002, 1.908427e-002, -2.271975e-002, -5.687509e-002, -4.973239e-003, 4.575243e-002, 1.359097e-001, 3.513467e-002, -1.456123e-002, 1.097772e-002, 7.026258e-003, 8.288147e-003, -2.369467e-003, -2.421115e-002, -3.964564e-003, 1.089811e-002, 4.309295e-002, 4.750267e-002, 2.945731e-002, 4.624880e-003, -6.113330e-003, 9.928471e-003, 2.439467e-003, -7.983079e-003, -2.617222e-002, -1.084977e-002, 4.537530e-002, 3.380413e-002, 2.693082e-002, 1.296053e-002, 4.149701e-003, 3.621111e-003, 4.183375e-003, -3.989525e-004, -1.319738e-002, -1.837546e-002, -1.181549e-003, 3.566369e-002, -6.576596e-002, -3.438468e-002, 4.449156e-002, 4.449156e-002, -3.438468e-002, 5.532670e-002, -5.900288e-003, -7.152787e-003, 4.054128e-003, 9.669182e-003, 1.587150e-002, 6.565357e-003, 1.866069e-002, 3.488176e-003, -1.231135e-003, 1.352357e-002, 1.461303e-001, 5.208331e-002, 5.208331e-002, 1.461303e-001, -9.969827e-002, 7.607677e-002, 3.178614e-002, 2.293138e-002, 4.745578e-002, 1.598304e-002, 3.495623e-002, 2.138051e-002, 8.875061e-003, 1.802476e-002, -4.579777e-002, 1.678635e-001, 5.402231e-002, 5.402231e-002, 1.678635e-001, -9.009613e-002, 5.734829e-002, 1.990387e-002, 3.773493e-002, 1.272581e-001, -7.073812e-004, 1.006642e-002, 4.119442e-003, 2.235006e-002, 3.237631e-002, -3.477791e-002, -2.178328e-003, 3.653887e-002, 3.653887e-002, -2.178328e-003, 1.735498e-002, -1.468029e-002, 1.769711e-003, -3.607543e-002, -2.202690e-002, 7.882451e-003, -6.106806e-003, 5.662443e-003, 1.498866e-002, -3.415026e-004, 5.638914e-004, 8.213135e-003, -2.237699e-002, -2.237699e-002, 8.213135e-003, 1.370057e-003, 8.881729e-003, -1.268750e-002, 1.263767e-002, -1.422634e-002, 2.329365e-002, -1.758372e-002, -8.327854e-003, 1.324987e-002, 1.412355e-003, 7.846333e-002, 7.029915e-002, 1.716304e-002, 1.716304e-002, 7.029915e-002, 2.334098e-002, 4.130016e-002, -2.018630e-003, -2.105521e-003, -7.180864e-002, -3.293779e-002, 1.299726e-002, -3.866179e-003, -5.727360e-003, -2.711821e-003, 9.095791e-002, 4.967187e-002, 2.822937e-002, 2.822937e-002, 4.967187e-002, -4.657894e-002, -7.017197e-002, -7.451475e-003, 2.602336e-003, 7.900958e-003, -4.655057e-002, -6.304268e-003, 5.316708e-003, -1.269915e-002, 1.186516e-002, 8.319886e-003, 5.009473e-002, -2.387831e-002, -2.387831e-002, 5.009473e-002, 7.641437e-002, 6.634396e-003, 9.785209e-003, 1.295103e-003, 2.755561e-002, 3.388256e-002, 1.214063e-002, 1.321570e-002, -1.563180e-003, 3.941524e-004, 5.453364e-002, 5.398838e-003, -4.015293e-003, -4.015293e-003, 5.398838e-003, -3.924448e-002, -2.929750e-002, -1.151954e-002, -2.306281e-002, -3.259876e-002, -7.554061e-003, -2.861587e-003, 1.074254e-003, -5.882022e-003, 1.479387e-003, -1.636951e-001, -1.671618e-001, -5.012675e-002, -5.012675e-002, -1.671618e-001, -1.824937e-001, -8.453570e-002, -1.684636e-002, -1.466361e-002, -2.369232e-002, 4.674296e-002, -3.209620e-002, 7.749809e-003, 6.614696e-004, 3.852360e-002, -1.147144e-001, -1.269557e-001, -3.703290e-002, -3.703290e-002, -1.269557e-001, -2.051890e-001, -3.457641e-002, -1.396678e-002, -1.826493e-002, -6.093963e-002, 3.652594e-002, 3.769392e-002, -6.796650e-004, -9.918307e-004, -3.296481e-002, 6.491929e-004, -3.866418e-003, -1.370189e-002, -1.370189e-002, -3.866418e-003, 3.156074e-002, -1.581663e-002, -9.973761e-003, 3.132531e-003, 6.964937e-003, 1.364736e-002, 4.497239e-003, 1.660415e-003, 2.524068e-003, 1.129079e-002, 2.585623e-002, -1.693860e-002, -3.262911e-002, -3.262911e-002, -1.693860e-002, -1.976914e-002, 4.717809e-002, 1.696308e-002, -1.927635e-002, -6.628930e-003, -7.351230e-003, -2.116843e-002, 4.918671e-003, -1.139697e-004, 1.519487e-003, 5.957022e-002, -3.773876e-002, -2.848129e-002, -2.848129e-002, -3.773876e-002, 8.360517e-002, -8.868458e-003, -5.021869e-003, 5.086900e-003, -4.305435e-003, 3.794304e-002, -5.472749e-003, -8.059571e-003, 2.626257e-004, 1.857748e-002, 6.234894e-002, -2.131269e-002, -1.694324e-002, -1.694324e-002, -2.131269e-002, 7.995347e-002, -2.371377e-002, 5.400506e-005, -5.545380e-003, -5.354880e-004, 3.819083e-002, 1.183107e-002, 3.754102e-003, -8.064380e-003, -6.002501e-003, 3.107326e-002, -2.261335e-002, -1.854519e-002, -1.854519e-002, -2.261335e-002, -1.087877e-002, -2.554405e-002, -1.694838e-002, 2.793515e-002, 1.563802e-002, 1.881224e-002, -5.963625e-003, 6.762752e-004, 6.252047e-003, -1.099752e-002},


© ISO/IEC 2004 — All rights reserved

Copyright International Organization for Standardization
Provided by IHS under license with ISO
No reproduction or networking permitted without license from IHS
Not for Resale

{-6.167715e-003, 1.828981e-002, 1.619934e-002, 8.090214e-003, -1.948611e-002, -6.478897e-003, -8.345870e-004, -9.341178e-003, 3.410796e-003, 2.899234e-003, -1.542116e-002, -4.301718e-003, -1.542116e-002, 2.899234e-003, 3.410796e-003, -9.341178e-003, -8.345870e-004, -6.478897e-003, -1.948611e-002, 8.090214e-003, 1.619934e-002, 1.828981e-002, 8.018691e-004, 5.284617e-003, 2.301853e-002, -8.794684e-003, 2.063048e-003, -4.885296e-003, 1.469573e-002, -2.607176e-003, 7.993881e-003, 2.034624e-002, 2.272583e-002, 2.216300e-002, 3.989432e-002, -2.981265e-002, 4.366400e-002, -2.383871e-002, 1.986400e-002, 3.616363e-003, 4.144269e-003, -1.357892e-002, 2.125693e-002, -1.087515e-002, 2.993242e-002, 6.564357e-004, -8.005972e-003, -2.158349e-002, 5.419870e-003, -2.572968e-002, -3.625523e-003, -4.216204e-002, -2.294780e-002, 2.192550e-003, 1.296182e-002, -1.739247e-003, 3.548447e-002, -6.574656e-003, -1.142294e-004, -3.526447e-002, 3.937688e-003, 5.855517e-003, -2.881551e-002, -2.133761e-002, -3.089786e-003, 7.975285e-003, -1.522049e-002, 1.335085e-002, 1.307178e-003, -6.101369e-003, 1.921696e-002, 8.520353e-003, 8.753938e-003, -2.643860e-002, 1.395831e-002, -2.092751e-002, 1.338906e-003, -4.430214e-002, 2.466484e-002, -5.752047e-002, -3.782026e-003, -1.337002e-002, -1.961728e-002, -1.087147e-002, -7.433857e-003, -4.782315e-003, -5.490971e-003, -2.434398e-003, -8.935932e-004, 1.364088e-002, 3.403955e-002, -4.235426e-003, -1.168136e-002, -3.922415e-002, 4.165796e-003, -1.642029e-002, 6.479285e-003, 5.149253e-003, -5.561742e-002, 6.023904e-003, 2.402788e-002, -2.720366e-002, 2.486854e-002, -3.896557e-003, -1.842719e-003, -4.698691e-003, -8.040881e-003, -1.369328e-002, -1.903591e-002, -2.052557e-002, 2.660904e-002, 1.191050e-002, -3.698381e-002, 2.356546e-002, -1.392187e-002, 5.701577e-003, -3.805816e-002, -9.920820e-003, 1.950835e-002, 3.084629e-002, -2.215495e-003, -6.874230e-003, -6.216230e-003, -2.711597e-002, -3.451543e-002, -5.588595e-002, -1.390789e-002, -1.141853e-002, -1.279201e-002, -2.562841e-002, -2.347543e-002, -2.927842e-002, 1.774002e-002, -1.175218e-002, -3.938282e-002, -5.972507e-003, 2.933392e-002, -2.170177e-002, -3.178891e-002, -6.736929e-002, -2.062943e-002, -5.220674e-003, 1.590450e-002, -3.955941e-002, -5.591492e-002, -5.865470e-003, -3.759073e-003, -5.218783e-002, -4.284504e-002, -1.236738e-002, -5.464190e-005, 3.254476e-002, 3.265655e-002, 1.112354e-002, -2.531101e-002, 2.263191e-002, -1.976704e-002, -1.695197e-002, -3.722431e-002, -3.206095e-002, -2.177902e-002, -3.797708e-002, -2.541213e-002, 4.864940e-003, -1.190103e-002, -4.197066e-003, -3.481210e-002, -2.218943e-002, -2.040663e-003, -2.137992e-002, 1.792618e-002, -5.773071e-002, -4.542028e-002, -6.244033e-003, 1.093727e-002, 1.244738e-002, -2.592414e-002, 4.144568e-003, -1.746034e-003, 3.902053e-002, -4.025839e-002, -1.894173e-002, -3.552136e-002, -2.655611e-002, 2.591318e-003, -3.897610e-002, -3.325811e-002, -9.316326e-003, -4.849249e-003, -3.073641e-002, -1.101605e-002, -2.392085e-002, -2.298420e-002, -2.001123e-002, -4.766813e-002, 1.144742e-002, 1.529190e-002, -2.138566e-002, 1.496269e-002, -4.891898e-002, 8.112036e-002, 2.824287e-003, 3.299232e-002, 9.896259e-004, -4.133944e-002, -3.600225e-002, -6.647746e-003, -2.436947e-002, -1.330633e-002, -1.728343e-002, -3.885771e-003, -7.224745e-003, 1.052147e-002, 6.890443e-003, 1.698520e-002, -1.036284e-002, -2.588423e-002, -3.496849e-002, 2.463942e-002, -5.005025e-002, -3.645980e-003, 7.498334e-002, -1.600007e-002, 2.008621e-002, 4.631702e-003, 9.740391e-003, 1.683673e-003, -3.092198e-002, -3.781353e-002, -3.930070e-002, -1.132368e-002, -2.001436e-002, -2.026468e-002, -1.570828e-002, -8.696119e-003, -2.139981e-003, 7.482469e-003, -2.172649e-002, -3.564680e-002, 3.477224e-002, 3.034615e-002, 1.321615e-002, 1.461040e-002, 4.255647e-002, 7.822179e-002, -3.726371e-002, -4.291175e-003, -2.398407e-002, -4.524828e-004, -2.731325e-002, 1.955069e-003, -1.178454e-002, -2.318411e-002, 4.077037e-003, -1.189599e-003, 8.732531e-004, -1.037196e-002, 3.693107e-003, -4.446117e-003, -3.043259e-002, 3.156414e-002, -3.178394e-002, 1.920920e-002, 8.475853e-003, 7.419147e-003, 2.709418e-002, 5.927863e-002, -2.750052e-002, -4.800440e-004, -4.243780e-003, -9.584626e-003, -4.880192e-003, 3.276202e-004, -1.614725e-002, -1.977705e-002, -5.008620e-003, -7.021020e-003, -1.918694e-002, -1.031838e-002, -2.409318e-002, -7.988683e-003, 7.718491e-003, -8.710368e-004, 8.300124e-003, -2.540222e-003, -3.787811e-002, -2.555193e-003, 3.470037e-002, -2.734967e-002, -1.160256e-002, -2.124225e-002, -1.547916e-002, 3.825837e-004, -1.000141e-002, -1.905440e-002, -1.471813e-002, -1.373123e-002, 1.072913e-003, -9.261455e-003, -3.811136e-003, -1.236163e-002, -2.647839e-002, -7.692416e-003, -2.927992e-002, -2.742530e-002, 8.298095e-003, 2.647179e-002, 8.277832e-003, -2.002948e-002, -3.559887e-003, -2.396927e-002, -1.170399e-002, 2.627910e-003, -1.482871e-002, -1.482871e-002, 2.627910e-003, -1.170399e-002, -2.396927e-002, -3.559887e-003, 6.320464e-002, 9.311045e-002, -2.536957e-002, 2.281434e-002, 4.539626e-002, 3.603829e-002, 3.931920e-002, -2.080922e-002, -1.197524e-001, -5.687427e-002, -1.039121e-001, 2.778537e-002, 8.812483e-002, 1.049625e-001, -8.322859e-002, -1.675587e-002, -2.129600e-002, -5.720014e-003, 7.541039e-003, -3.343523e-002, -5.321854e-002, 2.644696e-002, -1.562224e-001, -4.372669e-002, 5.857828e-002, 1.212799e-002, 6.478981e-003, 7.064356e-003, -4.008399e-003, -9.966548e-004, -1.018607e-002, -8.068529e-003, 1.561138e-001, 9.671368e-002, -5.385141e-003, -2.050571e-002, 2.349940e-002, 1.237938e-002, 3.460184e-003, 8.691783e-004, 5.325082e-003, 2.681316e-003, 1.081582e-002, 1.209221e-002, 5.592350e-002, 6.498017e-002, 2.968195e-003, -7.244860e-003, -4.348132e-004, 6.416918e-003, 2.425811e-003, 1.210287e-003, 4.616167e-003, 1.760749e-003, 4.311726e-002, 3.781790e-002, 2.237250e-002, 1.388204e-003, 4.593122e-003, 1.381328e-003, 4.742310e-003, 1.443452e-003, -6.808857e-004, -1.592016e-003, 4.408819e-003,

© ISO/IEC 2004 — All rights reserved


Copyright International Organization for Standardization
Provided by IHS under license with ISO
No reproduction or networking permitted without license from IHS
Not for Resale

4.829658e-002, -3.424882e-003, 8.653656e-004, -1.170644e-002, -2.624679e-002, -2.215077e-002, -1.644194e-002, -1.644194e-002, -2.215077e-002, -2.624679e-002, -1.170644e-002, 8.653656e-004, 4.710603e-002, -2.416371e-003, -2.583108e-002, -1.514465e-002, 2.606431e-003, 5.969368e-003, 7.316649e-003, 7.513355e-002, 5.928681e-003, 5.951055e-002, 5.456382e-002, -3.042927e-002, -1.101188e-003, -7.240470e-002, -3.433610e-002, 1.119649e-002, 2.009945e-002, 9.676523e-003, 1.946775e-002, 2.270538e-002, -8.222726e-002, 4.559108e-002, -5.641584e-002, 1.322862e-001, -2.462647e-003, -6.417239e-003, 1.499636e-002, 7.845606e-003, 5.869669e-003, 2.025067e-002, 3.022545e-002, -5.356619e-002, 5.612111e-002, 4.945541e-002, -3.159291e-002, 1.724870e-002, -5.975145e-003, 1.175641e-002, 5.766764e-003, 1.159096e-002, 3.785827e-003, 3.499509e-002, 2.503881e-002, 1.434962e-002, 2.556187e-002, 2.923608e-002, 7.968093e-003, 3.618525e-003, 8.801020e-003, 1.355087e-003, 6.774982e-003, 1.112986e-002, 1.577578e-002, -2.679149e-003, 4.702772e-002, 1.013971e-002, 4.766318e-002, -1.378738e-002, -5.883679e-003, -1.615019e-003, -1.466415e-003, 7.910228e-003, -3.143309e-003, -3.960487e-003, -6.102653e-004, -9.383795e-003, 6.683937e-003, -1.481132e-002, 2.355339e-003, -1.922274e-004, -8.575126e-003, 1.820588e-002, 1.820588e-002, -8.575126e-003, -1.922274e-004, 2.355339e-003, -1.481132e-002, 3.190388e-002, -5.529940e-003, 6.847290e-002, -3.085645e-002, -3.720059e-002, -4.997361e-003, 9.643632e-004, 3.366808e-002, -1.148348e-002, 9.129409e-003, -5.492384e-002, -5.218679e-002, 1.566586e-002, -2.394740e-002, -5.292627e-002, -3.274107e-002, -1.160494e-002, -6.095432e-003, -1.608530e-002, -1.550878e-002, 5.975147e-002, -5.296810e-002, 1.273698e-003, -6.342508e-002, -9.974655e-002, -6.183577e-002, -3.268660e-002, -1.900656e-002, -3.088779e-002, -9.420915e-003, -3.585313e-002, -1.034791e-001, -5.476267e-002, 5.509442e-002, -4.831707e-003, -2.484085e-002, -4.543968e-002, -2.790616e-002, -2.195234e-002, -1.645697e-002, -1.991946e-002, -2.167927e-002, -2.518660e-002, -2.488437e-002, 6.060922e-002, -3.548623e-003, -6.014417e-003, -9.745576e-003, -2.037935e-002, -2.575073e-002, -9.172021e-003, -7.332621e-003, -2.398433e-002, -2.655871e-002, -1.054296e-002, 6.490319e-002, -1.001134e-002, -2.548822e-002, -1.890688e-002, -1.404907e-002, -1.766851e-002, -1.107691e-002, -1.318538e-002, -1.383192e-002, -1.426995e-002, -1.426955e-002, 1.060271e-002, -1.965692e-002, 1.003766e-002, -6.691355e-003, -8.491972e-003, 1.182547e-002, 1.182547e-002, -8.491972e-003, -6.691355e-003, 1.003766e-002, -1.965692e-002, 1.459220e-002, -1.172580e-001, 9.367015e-002, -4.567403e-002, 2.726083e-002, 9.413860e-003, 4.411327e-003, 1.338793e-002, -5.348132e-002, -2.378058e-002, 8.045924e-003, 8.282662e-002, -5.400928e-002, 1.121003e-002, 9.160045e-002, -1.702280e-003, -1.521482e-003, -1.542005e-002, -3.169306e-002, -3.000554e-002, -6.152352e-003, -2.486871e-003, -1.219444e-002, -6.771323e-002, -6.536303e-002, -4.204876e-002, -1.315159e-002, 4.863787e-003, -3.301870e-002, -3.842205e-002, -5.162537e-002, -5.463166e-002, -5.904294e-002, -5.486121e-002, -3.822078e-004, -1.018658e-002, -1.961213e-002, -1.568435e-002, -2.055622e-002, -1.970401e-002, -1.807569e-002, -1.686889e-002, -3.459202e-002, -1.197249e-003, 1.353347e-002, 9.964249e-003, -2.276191e-002, -2.129502e-002, -1.799799e-002, -4.113087e-003, -2.183960e-002, -1.654718e-002, -1.658928e-002, -2.410856e-002, -2.307487e-002, 4.771356e-002, -9.482147e-003, -1.296706e-002, -1.362819e-002, -1.245489e-002, -1.200798e-002, -1.177921e-002, -1.069676e-002, -2.100643e-002, -1.107462e-002, 8.514845e-004, -1.755768e-002, 8.408267e-002, 2.391948e-003, 2.391948e-003, 8.408267e-002, 5.189843e-003, 1.735791e-002, 1.033401e-003, -8.468548e-003, -2.003104e-002, 4.033605e-003, 2.536658e-003, 1.670225e-002, 2.157623e-003, 3.761455e-003, 1.885930e-002, 2.487200e-002, 1.418643e-002, 1.418643e-002, 2.487200e-002, -1.568892e-001, 1.363566e-002, 4.261613e-003, 1.561374e-003, -5.284757e-003, -4.416361e-002, -8.959355e-003, -1.815793e-003, -2.091900e-003, -4.753840e-003, 1.922036e-001, 4.957436e-002, 8.495452e-004, 8.495452e-004, 4.957436e-002, 1.768982e-002, 7.363105e-003, -5.810274e-003, -4.803044e-003, 9.430745e-005, 1.959487e-002, -1.174596e-003, -3.025399e-003, -2.324019e-003, -2.955499e-003, -6.526911e-002, 1.106746e-001, 1.062697e-002, 1.062697e-002, 1.106746e-001, -6.461406e-002, 2.869323e-003, 6.937155e-003, 5.108505e-002, 4.616821e-002, -1.259475e-002, 1.491101e-002, 2.467221e-003, 2.200276e-002, 2.189581e-002, 6.220680e-002, 5.350628e-002, 7.591033e-002, 7.591033e-002, 5.350628e-002, 1.971426e-001, 4.488871e-002, 5.997830e-003, 8.357489e-003, 3.410220e-002, 5.157108e-002, 3.433817e-002, 1.392736e-002, 4.550978e-003, 1.375467e-002, -8.353789e-002, -4.383487e-002, -2.965812e-002, -2.965812e-002, -4.383487e-002, -4.376459e-003, 2.124001e-002, 1.541682e-005, -6.487493e-003, 3.430569e-002, 9.070003e-002, 1.346189e-003, -4.525014e-004, 7.728371e-004, 1.283061e-002, -1.494672e-001, -3.429170e-002, -1.220622e-002, -1.220622e-002, -3.429170e-002, 9.353791e-002, -5.183124e-003, -2.294692e-003, -1.364302e-002, -3.173017e-002, 5.755061e-002, 5.279803e-003, -7.743456e-003, -8.136007e-003, -3.440781e-003, 1.910789e-002, 3.926591e-002, 8.219733e-002, 8.219733e-002, 3.926591e-002, 1.542303e-001, 5.352362e-002, 3.607692e-002, 3.171334e-003, 9.434514e-003, 3.278089e-002, 1.840404e-002, 1.602805e-002, 1.371060e-002, 3.702505e-002, -3.046798e-002, -1.337950e-002, 2.553518e-002, 2.553518e-002, -1.337950e-002, 8.125940e-002, 1.156844e-002, -1.132706e-003, 3.035045e-004, 4.087233e-002, 2.284364e-002, 4.167005e-003, -1.695633e-003, -1.986649e-003, -3.575517e-003, 8.773404e-002, 2.037621e-002, -1.310730e-002, -1.310730e-002, 2.037621e-002, -9.439341e-002, -3.222835e-002, -1.481855e-002, -7.889201e-003, -2.127137e-002, -1.477481e-002, -1.387168e-002, -1.221025e-002, -3.869699e-003, -5.403047e-003, 3.909943e-002, -5.650073e-002, -


© ISO/IEC 2004 — All rights reserved

Copyright International Organization for Standardization
Provided by IHS under license with ISO
No reproduction or networking permitted without license from IHS
Not for Resale

3.955077e-002, -3.955077e-002, -5.650073e-002, -8.588145e-002, -8.373262e-003, 2.573657e-003, -1.240482e-002, -3.864420e-002, -3.113763e-002, 1.196823e-003, -4.920432e-003, -8.898547e-003, -1.377578e-002, -4.702602e-002, -1.673189e-002, 1.692850e-002, 1.692850e-002, -1.673189e-002, 4.139170e-002, 5.567283e-002, 1.477403e-002, -3.991641e-003, 1.592109e-003, 1.341953e-002, 3.210795e-003, 4.795264e-003, -1.057601e-003, 6.748305e-003, 2.208032e-002, 1.852362e-002, -8.611140e-004, -8.611140e-004, 1.852362e-002, 3.932366e-002, 1.888120e-002, -1.796567e-002, 1.964411e-002, 6.763510e-002, 3.924978e-002, -8.280392e-003, -1.936300e-002, -9.051510e-003, -1.758494e-003, -7.266244e-002, -1.152362e-003, -4.356864e-003, -4.356864e-003, -1.152362e-003, 7.065954e-002, -2.392568e-002, -1.324034e-002, -2.070190e-002, -4.679518e-002, 1.050149e-002, -1.016264e-002, -1.373981e-002, -1.110801e-002, -2.201914e-002, -1.882176e-002, -2.803124e-002, -1.816702e-002, -1.816702e-002, -2.803124e-002, 8.247928e-002, -5.085683e-002, -1.711757e-002, -9.176105e-003, -3.062240e-002, -3.673856e-003, -1.258069e-002, -8.966940e-003, -8.308384e-003, -1.693815e-002, 3.735106e-002, 2.896677e-002, 7.530651e-003, 7.530651e-003, 2.896677e-002, 8.970012e-002, -1.285645e-002, 5.808053e-003, -1.758238e-002, 1.052345e-002, -7.901027e-003, -1.648883e-002, -9.386791e-003, -1.624628e-002, -2.711497e-002},
{6.135521e-003, 7.527490e-003, -5.973378e-003, -1.367289e-003, -1.665046e-003, -2.627982e-004, 1.510702e-002, -3.249208e-003, 3.199175e-003, 1.474521e-002, -7.514406e-003, 2.541605e-002, -7.514406e-003, 1.474521e-002, 3.199175e-003, -3.249208e-003, 1.510702e-002, -2.627982e-004, -1.665046e-003, -1.367289e-003, -5.973378e-003, 7.527490e-003, 1.123317e-002, -6.529614e-004, -7.351235e-003, 1.732640e-002, -1.636220e-002, -2.763929e-002, -3.037311e-002, 7.287538e-004, -3.639685e-002, 2.506951e-002, 3.119498e-002, -8.622138e-003, -8.229152e-003, -4.620736e-003, -6.630966e-002, 3.605959e-002, -1.419047e-002, -3.348267e-002, -7.426262e-003, 3.595349e-004, -7.739011e-003, 4.929200e-003, 1.383103e-003, -2.966142e-002, -2.608607e-002, -2.294512e-002, -2.103957e-002, -4.086168e-002, -2.874438e-002, -4.002890e-002, -1.309530e-002, -2.223303e-004, -5.486882e-002, -4.140683e-002, -2.159756e-002, -5.841612e-002, -2.233643e-002, -5.502580e-002, -4.996426e-002, -2.761533e-002, -1.155981e-002, -2.127613e-002, -2.206272e-002, -3.490115e-002, 2.090435e-002, -9.381565e-003, 3.609824e-003, 1.960224e-005, -2.291648e-002, -1.879950e-002, -3.396256e-002, -4.711245e-002, -1.539929e-002, -4.576225e-002, 1.419688e-002, -1.227442e-002, 9.626087e-003, -1.429191e-002, -2.863546e-002, 2.253033e-002, -2.644694e-002, 7.570113e-003, -4.125095e-002, 6.374018e-003, -2.799930e-002, 4.295331e-003, 2.254561e-002, -2.444777e-002, -2.408183e-002, -1.382587e-002, 6.354521e-003, 1.157063e-003, -1.642770e-002, -2.147016e-002, 2.199425e-002, 3.561446e-003, -8.632752e-003, 4.119615e-003, -3.765206e-002, -2.232061e-002, -2.464152e-002, 2.425255e-002, 3.797952e-003, 1.479804e-002, -1.595745e-002, 4.517622e-002, 7.620798e-003, -1.716213e-002, 3.243699e-004, -3.585005e-003, -1.435865e-002, -6.452338e-002, -5.522790e-002, -5.575715e-003, -1.378147e-002, 2.024670e-002, 2.290489e-002, -1.009065e-002, 3.230426e-002, -2.596860e-002, -7.925805e-003, -8.702142e-003, -1.011174e-002, -7.227725e-003, -1.259300e-002, 1.403155e-003, -2.300916e-002, -3.034950e-002, -7.300264e-003, 1.288777e-002, 3.126217e-002, -1.558862e-002, -6.577339e-002, -1.410546e-002, -8.403650e-002, -1.933916e-002, -5.833054e-002, 6.766873e-004, 1.039230e-002, 3.989232e-002, 1.457231e-002, 7.733427e-003, 1.527562e-003, 3.316996e-003, 1.413925e-002, -7.792598e-003, -2.410858e-002, 3.642043e-002, -3.316970e-003, -1.454229e-002, 8.358662e-003, 6.117499e-003, -5.766113e-003, -2.047717e-002, -8.050077e-003, 1.367883e-002, -2.853382e-002, 2.461279e-002, -4.513029e-002, -1.965480e-002, 2.634700e-002, -2.571138e-002, -8.568167e-003, 3.557852e-003, 2.133851e-002, 3.177150e-002, 6.044313e-003, -3.848101e-002, -1.968667e-002, 2.430690e-002, 3.876521e-002, 5.158084e-002, 4.872428e-002, -2.469439e-002, -5.746394e-002, -6.548606e-003, 2.236791e-002, 3.348888e-002, 1.337874e-002, 1.132935e-002, -3.354604e-002, -4.217520e-002, -4.474549e-003, -1.582144e-002, -3.867549e-003, 1.168081e-002, 2.203296e-002, 1.244012e-002, 1.205849e-002, 2.649983e-002, 3.681059e-002, 5.130619e-003, 8.756342e-002, 4.195933e-002, 8.639160e-003, 2.893090e-002, -1.954336e-002, -2.697241e-002, -3.880246e-002, 7.313125e-003, -3.716553e-002, 4.259609e-002, -3.983577e-002, -1.126149e-002, -2.447781e-002, -1.054312e-002, -1.156487e-002, 6.799676e-003, 5.533827e-003, -1.646665e-002, -2.703283e-002, -3.721371e-002, -6.936450e-003, -5.464390e-002, 6.571207e-002, 1.834020e-002, -1.238965e-005, 2.681594e-002, -6.822659e-003, 8.730546e-003, -4.188703e-002, -2.247946e-003, 8.162268e-002, 3.267196e-002, -4.235233e-002, -8.057591e-003, -1.107094e-002, 1.670156e-002, -4.310524e-003, -1.434786e-002, 3.470389e-003, -9.255298e-003, -2.393954e-002, -1.053038e-002, 3.422825e-003, -5.786494e-002, 8.357347e-003, -3.735892e-002, 4.257742e-002, -1.214687e-002, -3.988357e-002, -1.134512e-002, -1.214335e-002, -6.583945e-002, 2.402247e-002, -2.611551e-002, -3.071562e-002, -1.751943e-002, -7.700364e-003, -1.739351e-002, -1.452212e-003, -1.538054e-003, 1.019554e-003, 1.529151e-002, -3.638461e-005, -1.343615e-002, 3.655862e-003, -3.861074e-002, 1.662516e-002, -4.001343e-002, -3.109025e-002, 1.795771e-002, 1.505368e-003, 2.004359e-002, -1.528088e-002, 4.703713e-002, 3.289565e-002, 2.819794e-002, -7.534856e-003, -2.011396e-002, -1.587919e-002, -1.379920e-002, 1.146003e-003, -4.377428e-003, -1.400889e-002, -2.159385e-002, -6.047082e-003, 9.444220e-003, -8.701423e-003, -1.811634e-002, 4.037644e-002, -3.231282e-002, 3.130426e-002, 2.513243e-002, -1.477512e-002, -4.021845e-002, 9.646142e-003, -5.782570e-003, 2.943753e-002, -4.129639e-003, -2.847681e-003, 1.220575e-002, -3.030206e-003, -7.441595e-003,

© ISO/IEC 2004 — All rights reserved


Copyright International Organization for Standardization
Provided by IHS under license with ISO
No reproduction or networking permitted without license from IHS
Not for Resale

8.322378e-003, -1.466598e-003, -2.313193e-003, -7.368157e-003, -7.700975e-003, 1.415479e-002, 1.079027e-002, 1.274602e-002, 1.835466e-002, -3.929771e-002, 2.146413e-004, 1.696405e-002, -2.364472e-003, 2.079411e-002, 1.550771e-002, 1.712197e-003, 1.437710e-002, 7.531755e-003, 7.531755e-003, 1.437710e-002, 1.712197e-003, 1.550771e-002, 2.079411e-002, -8.899002e-002, 6.942409e-002, 4.334658e-002, -4.992601e-003, -5.090584e-002, -5.307638e-002, 3.525548e-002, 6.254656e-002, 3.850219e-002, -6.886286e-002, -6.905733e-002, -6.694118e-002, 3.535789e-002, 7.694988e-002, 7.756884e-002, 5.546159e-002, 1.261251e-002, 3.938213e-003, 1.208466e-002, 8.276252e-003, -1.685511e-003, -3.510844e-002, 1.193139e-002, -2.642113e-003, 3.392258e-002, 3.219893e-002, 1.361322e-002, 7.948305e-003, -2.821961e-003, 1.330529e-003, -3.092206e-002, -3.474674e-002, -3.059783e-002, 5.241687e-002, 5.309862e-002, 2.870254e-002, -5.851946e-003, 1.810948e-002, 2.530956e-002, 4.081072e-003, 2.647026e-003, -7.263041e-003, -4.090988e-002, -4.145477e-002, -6.149055e-002, -4.765241e-002, 5.706107e-003, -1.573792e-002, 6.579475e-003, 3.558971e-003, -8.529753e-004, 1.887096e-003, -1.415547e-002, -3.326300e-002, -1.106804e-001, -1.084197e-002, 4.135406e-003, 7.737924e-003, -1.077887e-003, -9.006863e-003, 4.965660e-003, -5.817283e-003, -2.144487e-003, -6.702270e-003, -3.665195e-002, -4.018183e-002, -4.283070e-002, 1.075676e-002, 1.103751e-002, -8.058922e-004, 2.956696e-002, 1.737404e-002, 1.737404e-002, 2.956696e-002, -8.058922e-004, 1.103751e-002, 1.075676e-002, -5.850902e-002, -7.804471e-002, -1.262433e-001, 4.667466e-002, 5.261990e-002, 4.769178e-002, -3.866510e-002, -4.051753e-002, -1.030453e-001, -2.931949e-002, 1.258439e-002, -2.114511e-002, -3.311331e-002, 2.252134e-002, 4.715711e-002, 2.963921e-002, 2.915924e-002, 8.375728e-003, 1.436078e-002, 1.105219e-001, 1.544588e-002, 5.326803e-002, -8.660048e-002, -4.310433e-002, -1.764127e-002, -9.949925e-003, -2.180818e-003, 7.333503e-003, 1.326180e-002, 1.855573e-002, 1.005142e-002, -1.379653e-002, 7.704755e-002, 7.755333e-002, -3.696526e-002, -3.109933e-002, -1.450920e-002, 8.969215e-004, 7.598186e-003, 1.983000e-002, 2.462839e-002, 2.577115e-002, 3.384722e-002, 6.033624e-002, -1.075283e-001, -1.191949e-001, -3.010721e-002, -1.825827e-002, -7.417341e-003, -3.299944e-003, 4.549064e-003, 1.699502e-003, -3.354078e-003, 1.137950e-002, -2.946867e-002, -4.535369e-002, -4.199040e-002, -2.901424e-002, -1.108321e-002, -5.269157e-003, -4.262610e-003, 2.238273e-003, -1.446187e-003, -2.550851e-003, -3.854323e-003, 7.309153e-003, 1.487542e-002, -1.473866e-002, 4.817058e-003, -1.228783e-002, 8.720656e-003, 1.071623e-002, 1.071623e-002, 8.720656e-003, -1.228783e-002, 4.817058e-003, -1.473866e-002, -6.821438e-003, 4.021004e-003, -2.504871e-003, -2.303584e-002, 1.031139e-002, 1.879708e-002, 2.560983e-002, 2.850582e-002, 2.436510e-002, -1.321020e-002, 1.082234e-001, 3.219594e-002, 4.802457e-002, -1.028751e-001, -2.652457e-002, -5.614814e-003, -1.560441e-002, -1.771070e-002, -3.727351e-002, -3.348654e-002, 1.699499e-002, -4.051996e-002, 4.310598e-002, 1.177086e-001, -4.325875e-002, -5.083703e-002, -1.304169e-002, -1.682875e-002, 8.521456e-004, -7.545066e-004, 4.788732e-002, 1.831791e-002, 1.111700e-002, 9.376479e-002, 8.793250e-002, 1.014335e-002, -1.445449e-002, -2.362172e-002, -2.052516e-002, 7.413043e-003, 9.608529e-003, 3.191346e-002, 6.172393e-002, 2.104079e-002, 9.660366e-002, 7.711437e-002, 7.017785e-002, 1.012307e-003, -1.310496e-002, -7.130117e-003, 7.854732e-003, 3.598809e-003, 1.012337e-002, 2.636470e-002, 4.203647e-002, 5.973745e-002, 5.671218e-002, 4.204269e-002, 1.814985e-002, -6.868276e-003, -1.001620e-002, 6.081143e-003, 8.916762e-003, 1.056344e-002, 1.999978e-002, 5.248199e-002, 3.645527e-002, -5.476335e-003, 1.685083e-002, 1.013000e-002, -1.809677e-003, 1.894315e-002, 1.894315e-002, -1.809677e-003, 1.013000e-002, 1.685083e-002, -5.476335e-003, 3.278597e-003, 7.078040e-002, 2.532049e-002, -3.192634e-002, 6.701508e-003, 2.463446e-002, 3.129779e-002, 2.434390e-002, 7.250088e-002, -1.700262e-002, -3.832666e-002, 8.259655e-002, 1.561458e-002, 8.031843e-002, -6.446860e-002, -4.553718e-002, -5.489089e-003, 1.493905e-002, 2.516389e-002, -9.255557e-003, -7.193991e-002, -1.854579e-002, -2.694156e-002, 5.876798e-002, 5.149571e-003, -4.779743e-003, -9.474065e-003, -8.117263e-004, 5.402586e-005, -1.102903e-002, -3.205422e-002, -8.053723e-003, 1.074861e-001, 8.323568e-002, 4.263644e-002, 3.895644e-002, 6.855660e-003, -6.652343e-003, 1.081325e-003, -1.176350e-003, -2.176415e-002, -6.788067e-003, 3.988201e-002, 4.823737e-002, 6.180123e-002, 4.547460e-002, 2.340628e-002, 5.444431e-003, 6.671426e-003, 6.624729e-003, -1.183305e-002, -1.688225e-002, -1.269927e-003, 3.548482e-002, 8.773938e-002, 5.726267e-002, 4.421731e-002, 2.134414e-002, 1.105528e-002, -4.947177e-003, -1.326277e-003, -1.208056e-002, -7.712481e-003, 7.140001e-003, 4.077313e-002, 4.304226e-002, 2.710861e-003, 3.912414e-002, 6.275855e-002, 6.275855e-002, 3.912414e-002, 4.250813e-002, -3.440438e-003, 2.635544e-002, 1.224346e-002, 2.394763e-002, 3.191921e-002, 2.672311e-002, 1.660719e-002, 8.369311e-003, 6.080084e-003, 8.324116e-002, -1.679374e-002, -6.228042e-004, -6.228042e-004, -1.679374e-002, 6.511448e-002, 6.856379e-003, 3.593548e-003, 5.751368e-003, -2.628866e-003, 5.169899e-002, 1.430086e-002, 1.317173e-003, -1.418764e-003, -8.157221e-003, -3.105020e-002, -1.421496e-001, -4.780829e-002, -4.780829e-002, -1.421496e-001, 6.583354e-002, -3.178341e-002, -5.736344e-003, -1.682779e-002, -4.913562e-002, 5.456076e-002, -7.276593e-003, -4.704482e-003, -5.555592e-003, -1.169108e-003, 6.940461e-002, -1.531670e-003, 3.528622e-002, 3.528622e-002, -1.531670e-003, 6.815832e-002, 4.830857e-002, 2.467906e-002, 2.827971e-002, 2.051286e-002, 1.733585e-002, 7.130241e-003, 9.054810e-003, 2.834457e-002, 3.367135e-002, -4.097861e-002, -7.534520e-003, -2.590412e-002, -2.590412e-002, -


© ISO/IEC 2004 — All rights reserved

Copyright International Organization for Standardization
Provided by IHS under license with ISO
No reproduction or networking permitted without license from IHS
Not for Resale

7.534520e-003, -2.426453e-002, 4.159648e-002, 1.388348e-002, 2.020785e-002, 1.555238e-002, 1.906705e-002, 2.976729e-003, 4.730556e-004, 1.001629e-002, 8.430773e-003, -4.733788e-002, -9.740519e-002, -3.748153e-002, -3.748153e-002, -9.740519e-002, 1.256138e-001, -1.011454e-002, -1.425853e-002, -1.149301e-002, -3.435217e-002, -8.542147e-002, -1.477599e-002, -8.743856e-003, -8.040661e-003, -9.447427e-002, -7.728034e-002, -2.885376e-002, -5.319679e-003, -5.319679e-003, -2.885376e-002, 1.093519e-001, -1.144495e-002, 1.065585e-003, -9.300569e-003, 9.442976e-003, -6.593029e-002, -8.794174e-002, -1.255261e-002, -3.924732e-003, -1.871917e-002, -3.904770e-003, -3.219254e-002, -3.173987e-002, -3.173987e-002, -3.219254e-002, -3.711442e-002, 3.308437e-002, 1.191553e-002, 6.669935e-003, 4.266762e-002, -1.069539e-002, -3.331530e-003, -4.781763e-003, -8.287651e-003, -1.381051e-002, -4.214253e-002, -1.690472e-003, 8.107304e-003, 8.107304e-003, -1.690472e-003, 1.059997e-001, 4.448828e-002, 1.856751e-002, -2.076201e-003, 3.982585e-002, 3.475889e-002, 9.740361e-003, 7.080203e-003, 7.145580e-003, 1.446314e-002, 1.211253e-002, -4.147762e-003, -2.259636e-002, -2.259636e-002, -4.147762e-003, -8.654405e-002, -5.190292e-002, -7.855707e-003, -1.210284e-002, -1.879977e-002, 3.782336e-002, 8.613263e-003, -1.097136e-002, 2.028814e-003, 2.871518e-002, 5.002813e-002, -5.403469e-002, -1.091060e-002, -1.091060e-002, -5.403469e-002, -6.646793e-002, -1.181535e-002, -1.234021e-002, 4.969721e-003, -4.221773e-002, 4.141110e-002, 2.835266e-002, 3.826755e-003, 2.143578e-003, 1.587132e-002, -7.275196e-002, 2.058274e-003, -3.285491e-003, -3.285491e-003, 2.058274e-003, 1.071710e-001, 1.076275e-002, -1.329899e-002, 2.263411e-002, 4.230938e-002, 3.073885e-002, 1.238581e-002, 1.113461e-002, 9.237647e-003, 1.053171e-002, 5.504201e-004, -5.629913e-002, -9.389048e-003, -9.389048e-003, -5.629913e-002, 1.041949e-001, -6.102198e-002, -1.094124e-002, -1.112670e-002, 2.772142e-002, 7.397711e-002, 3.315987e-002, -1.981972e-002, 9.770914e-003, 2.326782e-002, 4.435501e-002, 2.928596e-002, 1.645754e-002, 1.645754e-002, 2.928596e-002, -4.721806e-002, -8.349744e-003, -3.444320e-003, -1.373316e-002, -4.157583e-002, 2.547411e-002, 3.976764e-003, 2.306103e-003, -2.443170e-003, 1.092206e-002, 4.516175e-002, 5.758977e-003, -5.509071e-003, -5.509071e-003, 5.758977e-003, -1.962222e-002, -2.522744e-002, -1.148670e-002, -5.537044e-003, -6.212069e-003, 2.324913e-002, -4.737895e-003, -4.375664e-003, -6.805534e-005, -1.127939e-003, 1.401736e-002, -4.047866e-002, -1.423435e-002, -1.423435e-002, -4.047866e-002, 1.331267e-002, 2.369884e-002, -2.385473e-002, 2.737492e-003, -5.387221e-002, 2.698894e-002, 5.219251e-003, -2.204830e-003, -1.918651e-002, 1.841801e-002},
{2.286009e-003, -5.842496e-003, 8.669175e-003, 9.225049e-003, -1.929390e-002, -7.333993e-003, -1.376489e-003, 4.749571e-003, 2.775198e-003, -1.693719e-003, 4.822751e-003, 2.541013e-002, 4.822751e-003, -1.693719e-003, 2.775198e-003, 4.749571e-003, -1.376489e-003, -7.333993e-003, -1.929390e-002, 9.225049e-003, 8.669175e-003, -5.842496e-003, 5.880149e-003, -1.085216e-002, -1.715100e-002, -3.733042e-004, 2.430878e-003, 1.724350e-002, 1.681270e-002, -3.051907e-002, -2.393301e-002, -2.896377e-002, -4.003080e-003, -1.208250e-002, -8.476859e-003, 2.844061e-002, -8.705767e-003, 1.978640e-002, -1.848426e-002, 4.047501e-003, 1.875228e-003, -3.881589e-003, -9.773173e-003, 2.091004e-002, 1.545830e-002, -1.406471e-002, -1.054356e-002, 3.004353e-002, 2.723817e-002, 3.410560e-002, 1.467696e-002, 1.433169e-002, -1.078273e-002, 7.198687e-003, 6.885306e-003, -1.054305e-002, 1.484980e-003, -3.514883e-002, -1.368226e-002, -1.043946e-002, -3.028243e-003, 7.351701e-003, 1.340635e-003, -1.130201e-003, 3.365428e-002, 1.514592e-003, -2.454428e-002, -2.270903e-002, -1.028488e-003, 3.862933e-002, -1.042763e-002, -8.605022e-003, 3.013517e-003, -8.292308e-003, 3.307617e-003, 5.017423e-002, -5.379193e-005, 3.755265e-002, 7.151629e-003, -3.974533e-003, 2.320040e-002, -2.048712e-002, 2.769894e-002, 7.630115e-003, 2.819814e-003, 3.061143e-002, -7.918573e-003, 1.496645e-002, 1.342894e-002, -1.864773e-002, -1.075500e-002, -3.174804e-002, 1.780215e-002, 5.661773e-003, 3.498471e-002, -3.051285e-003, -4.772110e-003, -2.913182e-002, 2.961563e-002, -6.385614e-003, 1.555387e-002, 2.322346e-002, 3.541874e-002, 2.025648e-003, 2.737300e-002, 1.990169e-003, 3.103210e-002, 1.958024e-002, -8.292699e-004, 4.127949e-002, -5.808628e-003, 2.817194e-002, 1.026419e-003, 2.211413e-002, -1.530381e-002, 1.186604e-002, 2.856304e-002, 4.255073e-002, -1.831413e-002, 3.170023e-002, 3.238208e-002, -6.140519e-004, -1.720595e-002, -2.196538e-003, 1.319127e-002, 1.204362e-002, 7.460093e-003, -7.487994e-003, 2.120332e-002, 3.645727e-003, 1.343773e-002, -2.243166e-002, 1.993578e-002, -5.332072e-005, -3.128735e-002, 1.811941e-002, 1.631330e-002, -3.965627e-003, -4.986153e-003, 4.120965e-002, -2.276956e-002, -1.645306e-002, 3.690550e-003, 1.146527e-002, 1.672812e-002, 2.017786e-002, 1.373576e-002, 1.117113e-002, 1.346957e-002, 8.408460e-002, 1.742111e-002, 2.307055e-002, 4.145586e-003, 5.708440e-002, 3.866082e-002, 4.580221e-002, -1.389790e-002, -4.168457e-002, 6.225719e-002, 1.526005e-002, 7.301911e-004, 3.222481e-002, 1.862700e-002, 7.012797e-003, -6.787481e-005, 2.104410e-002, 1.375214e-002, 3.132105e-002, 3.978055e-002, 3.529396e-003, 4.744890e-002, 8.951235e-003, 3.221965e-002, -1.175759e-002, 1.914693e-002, 1.197043e-002, 9.209539e-004, -1.562250e-002, -4.422764e-002, -2.714985e-002, 9.094590e-003, -5.842358e-002, -2.664055e-003, 3.077430e-002, 4.699281e-002, -1.828053e-003, 1.764145e-002, -3.123899e-004, 2.897979e-003, 2.913219e-002, 2.818963e-002, -1.143536e-002, 2.562519e-003, -1.213065e-002, -3.347015e-002, 2.571412e-002, -2.480657e-003, 7.660460e-003, -8.010497e-003, -4.576899e-002, -4.155646e-002, -3.700857e-003, 2.770636e-002, 3.128386e-002, 1.163856e-002, 7.183309e-003, 9.592856e-004, 9.586003e-003,

© ISO/IEC 2004 — All rights reserved


Copyright International Organization for Standardization
Provided by IHS under license with ISO
No reproduction or networking permitted without license from IHS
Not for Resale

1.180492e-002, 6.581343e-003, -4.706143e-003, 1.409667e-002, 2.117118e-002, 1.071180e-003, 9.440675e-003, 2.574358e-002, 3.182452e-002, -8.941268e-004, 3.150422e-003, -2.362801e-002, -3.467304e-002, -2.744926e-003, 3.303047e-002, 1.064399e-002, 5.254112e-002, 2.724972e-002, -4.517262e-003, 1.946441e-002, 9.261691e-003, 1.532162e-002, 2.152033e-002, 1.181077e-002, -1.858914e-004, 1.245977e-002, 2.189799e-002, 7.941865e-003, 8.832823e-003, -4.834794e-003, -3.667376e-002, -5.944432e-002, 2.239413e-002, -1.750180e-002, 1.738390e-002, 2.794049e-002, 1.182817e-002, -9.573093e-004, -1.201048e-002, -3.805590e-002, 9.445206e-003, 2.940654e-002, 1.940008e-002, 1.942280e-002, 6.769650e-003, 1.218496e-002, 1.635570e-002, 2.002290e-002, 6.140055e-003, 8.282996e-003, 1.453980e-002, 5.992640e-003, -2.185195e-002, -6.065874e-002, 2.678587e-002, 2.908196e-002, -8.677454e-003, -6.048919e-003, -1.499702e-002, 4.033997e-002, -1.490574e-002, 7.878344e-003, 1.751308e-002, 3.835763e-003, 5.959109e-003, 1.685142e-002, 6.685577e-003, 9.831864e-003, -2.557467e-003, 1.670530e-002, 1.222853e-002, 1.508502e-003, -1.065156e-003, -8.948256e-003, 1.557984e-002, -3.570236e-002, -3.693960e-002, 4.590393e-002, 3.428074e-003, 7.158582e-003, -3.214627e-002, -6.842355e-003, -2.489021e-004, 7.342503e-003, 1.052666e-002, -3.124265e-003, 1.069180e-002, 1.130746e-002, 1.620814e-003, 5.851485e-003, 4.774569e-003, 2.668427e-003, 7.178730e-003, -4.205231e-003, 3.894048e-004, -3.889181e-003, 1.012516e-002, 6.443393e-003, 9.273331e-003, 4.080755e-002, 1.848646e-002, -1.378402e-002, 2.585328e-002, 2.590747e-002, 3.461572e-002, -9.368527e-003, -9.368527e-003, 3.461572e-002, 2.590747e-002, 2.585328e-002, -1.378402e-002, -2.459869e-002, -3.942266e-002, 6.465946e-002, -6.442749e-002, -2.476364e-002, -1.892996e-002, 4.466748e-002, 1.228834e-001, 1.361700e-001, 4.935517e-002, 1.254096e-002, -1.554570e-001, 4.380662e-002, -6.466204e-002, 2.711386e-002, -1.573043e-002, -1.410208e-002, 2.387501e-002, 4.760965e-002, 6.587870e-002, 2.433357e-002, -3.174296e-002, 9.672520e-002, -3.927922e-002, 1.372910e-002, 2.290785e-002, -1.232466e-002, -6.280114e-003, 9.621652e-003, 1.178738e-002, 1.609172e-003, -2.303539e-002, -4.424835e-002, 6.788708e-004, -3.022783e-002, -9.553949e-004, -1.874961e-003, 3.510023e-002, 6.828658e-003, 7.372811e-003, -3.702442e-003, -1.224298e-003, -1.822017e-002, -8.673296e-003, 9.158800e-003, 7.302211e-003, 2.823120e-002, 2.192554e-002, 1.116972e-002, 1.708546e-002, 3.796172e-003, -4.990646e-003, -1.792200e-003, -5.442923e-003, -2.931929e-002, 2.569690e-002, 2.748550e-002, 9.000489e-003, 1.302707e-002, 5.704827e-003, 9.973131e-003, 5.817461e-004, -5.085466e-003, -9.988076e-005, -1.001479e-002, -1.060417e-002, -5.048317e-002, -1.830394e-002, 1.940107e-002, 3.361149e-002, 3.053739e-003, 4.029966e-003, 4.029966e-003, 3.053739e-003, 3.361149e-002, 1.940107e-002, -1.830394e-002, 9.676234e-003, 2.621092e-002, 5.378642e-002, 3.350583e-002, 4.229695e-002, 1.549426e-002, -9.595213e-003, 2.472138e-002, 5.481025e-002, 1.884743e-002, -1.312881e-002, -8.286051e-002, -2.661079e-003, 9.087146e-002, 6.838259e-002, 5.918806e-002, 2.791218e-002, 1.048742e-002, -8.499130e-003, 5.421920e-002, 3.862378e-003, 3.857910e-002, -3.308906e-002, -9.477474e-002, -6.806204e-002, 2.648178e-003, 8.298071e-003, 7.626921e-003, 1.111970e-002, 4.396040e-003, 4.161594e-002, -1.818436e-003, -1.583272e-001, -3.412396e-002, -4.078041e-002, -2.353250e-002, -9.499908e-003, -4.578437e-003, 9.073419e-003, 7.283013e-003, 3.460336e-002, 7.738859e-003, 2.690714e-002, -4.474194e-002, 5.366385e-002, -4.433268e-002, 3.439298e-003, 4.487146e-003, 5.247249e-003, 5.431365e-003, 1.340961e-002, 1.841433e-002, 2.866987e-002, 1.976530e-002, -3.095516e-003, 5.052288e-002, -1.401990e-002, -1.620774e-002, 1.182349e-002, 1.034952e-002, 2.370422e-003, 1.854697e-002, 2.086655e-002, 4.594344e-003, -2.896244e-003, 4.046296e-002, 4.379507e-004, 1.442512e-002, 1.158766e-002, 2.585039e-002, 1.111950e-002, -2.304791e-003, -2.304791e-003, 1.111950e-002, 2.585039e-002, 1.158766e-002, 1.442512e-002, -9.682062e-003, -3.620105e-002, 9.811949e-002, -1.591406e-002, -1.871541e-002, 9.835036e-003, -1.404695e-003, 7.138052e-002, -2.675970e-002, 5.927270e-002, -6.547796e-002, 2.801267e-002, -2.487862e-002, 1.599265e-002, 3.060626e-002, -2.332604e-002, -3.047993e-003, 1.930197e-002, -3.585176e-002, -4.519533e-002, -5.659563e-003, -7.726426e-002, 1.335193e-002, -3.732597e-002, -3.222434e-002, 8.664098e-003, -1.075361e-003, -1.536526e-003, -1.167185e-002, 1.265141e-002, -7.696085e-004, -2.301320e-003, -3.386316e-002, 2.606607e-002, -1.517506e-002, -1.944732e-002, -8.083877e-004, 9.377878e-003, -1.109490e-002, -2.245321e-003, 4.369396e-003, -1.474071e-004, 8.069369e-003, -3.072076e-002, -4.628178e-003, -1.392185e-002, 2.999256e-003, -7.063515e-004, -7.733650e-003, -3.597824e-003, -1.413337e-003, 5.661886e-003, -1.032864e-002, -6.981268e-003, -8.858925e-003, -1.335829e-002, -3.821997e-002, -1.481726e-002, -1.273659e-002, -7.193384e-003, -1.054873e-002, -1.222699e-002, -9.747771e-003, -1.157376e-002, -3.605302e-003, -3.006967e-002, 3.384477e-002, 6.765253e-003, 4.506001e-003, -4.099999e-003, 6.749248e-003, -5.522020e-002, -5.522020e-002, 6.749248e-003, -4.099999e-003, 4.506001e-003, 6.765253e-003, 4.759877e-004, -1.464278e-002, -5.137928e-004, 8.767758e-002, 1.076347e-004, 2.281306e-002, -2.793274e-002, -6.380202e-002, -1.929379e-003, -5.790106e-002, -5.714058e-002, -2.105227e-002, -2.187274e-002, -3.612049e-002, -1.625035e-002, 6.698051e-003, 3.294302e-002, -2.753953e-003, 2.469105e-004, 1.164634e-002, 2.602200e-002, 1.812352e-002, 2.300322e-002, 1.081448e-002, -1.076819e-001, -3.279310e-003, -2.679653e-003, -4.935656e-003, -1.628851e-002, -1.285097e-002, -1.625492e-002, -6.186594e-002, -4.410609e-002, 4.058962e-002, -3.152956e-002, -1.932503e-002, -8.572727e-003, -4.095470e-003, 5.962629e-004, -1.041519e-002, -1.725442e-004, -2.132286e-002, -


© ISO/IEC 2004 — All rights reserved

Copyright International Organization for Standardization
Provided by IHS under license with ISO
No reproduction or networking permitted without license from IHS
Not for Resale

5.101979e-002, -2.348539e-002, 3.760641e-002, -7.791403e-003, -1.170122e-002, -3.440971e-003, -1.653297e-003, -2.015018e-003, -4.713580e-003, -5.078211e-003, -1.703371e-002, -2.303995e-002, -7.220532e-003, 1.840398e-002, -2.401591e-002, -2.152828e-002, -8.926371e-003, -7.737654e-003, -2.948054e-003, -3.296690e-003, -1.522456e-002, -1.382633e-002, -1.341744e-002, -2.929350e-002, -1.144365e-001, -2.546538e-002, 1.660307e-002, 1.660307e-002, -2.546538e-002, 1.272517e-001, 1.780494e-002, -1.486848e-003, 1.758007e-002, 3.329281e-002, 5.691649e-002, 1.746088e-002, 1.016153e-002, 6.363637e-003, 7.512665e-003, 1.800985e-001, -8.408914e-002, -3.032069e-002, -3.032069e-002, -8.408914e-002, 1.255528e-001, -1.384757e-002, -1.319223e-004, -3.144848e-004, 3.625438e-003, -1.027539e-002, 1.245544e-002, 7.257446e-003, 1.686696e-003, -3.622706e-003, 2.690892e-002, -4.223596e-002, -2.107254e-002, -2.107254e-002, -4.223596e-002, -9.165417e-002, 1.454289e-002, 1.235718e-002, 1.056186e-002, 6.583471e-003, -7.321829e-002, -7.728481e-003, 2.371116e-003, 5.748985e-003, 1.027676e-002, 5.023669e-003, -3.847761e-003, 3.368683e-003, 3.368683e-003, -3.847761e-003, 9.397148e-002, 1.733258e-002, 3.564701e-004, -1.469882e-003, -3.628395e-003, 4.421732e-002, 6.396274e-004, -1.207428e-003, 1.047347e-002, 1.737783e-002, -7.693564e-003, 2.214860e-002, -1.072763e-002, -1.072763e-002, 2.214860e-002, 1.418168e-001, 7.912299e-002, 1.173423e-002, 5.059740e-002, 8.028770e-002, 4.450764e-002, 1.827154e-002, 9.807465e-003, 3.794599e-003, 2.180528e-002, -3.948197e-002, -9.061263e-002, -2.572947e-002, -2.572947e-002, -9.061263e-002, -2.775403e-001, -2.901529e-002, -6.601737e-003, 1.118478e-002, -3.643693e-003, 1.438327e-003, -8.156040e-003, -6.671829e-004, -3.918045e-003, -2.312017e-003, -9.145270e-002, 5.499418e-002, 1.708050e-002, 1.708050e-002, 5.499418e-002, -2.733995e-001, 3.255305e-002, -1.211317e-003, 7.187160e-003, -1.388226e-002, 6.495617e-003, -3.055782e-002, 9.803817e-005, 5.672606e-003, 1.763148e-003, 9.036942e-003, -2.280233e-002, -2.466818e-003, -2.466818e-003, -2.280233e-002, 1.698316e-001, 4.788477e-002, 4.391240e-002, 1.207988e-002, 6.826750e-002, 5.715856e-002, 1.723865e-002, 7.840790e-003, 9.855176e-003, 2.955957e-002, 1.042110e-002, -7.782252e-002, -3.025992e-002, -3.025992e-002, -7.782252e-002, -2.403777e-002, -6.337874e-003, 1.366460e-002, -9.543116e-003, -4.044168e-002, -2.428095e-002, -1.568098e-002, -7.736112e-004, 5.515483e-003, -9.493580e-003, -2.893529e-002, 5.746487e-002, -5.128501e-003, -5.128501e-003, 5.746487e-002, -9.930552e-002, -9.223403e-003, -1.823557e-002, -1.127517e-003, -3.283298e-002, -2.779743e-002, -2.811976e-002, -1.028932e-002, -6.080899e-003, -5.147030e-004, 9.708973e-002, 3.434582e-002, 6.505159e-003, 6.505159e-003, 3.434582e-002, -8.639880e-002, -6.737942e-003, -1.096656e-002, -9.586207e-003, 1.108714e-002, -8.601728e-003, 2.850249e-004, -3.487704e-003, -4.821911e-003, -1.538717e-002, 4.246371e-002, -4.078238e-002, -2.320221e-002, -2.320221e-002, -4.078238e-002, -4.280513e-002, -4.338247e-002, 7.542950e-003, 3.588125e-003, -7.228209e-003, -2.350931e-002, -1.941440e-002, -4.639495e-003, -1.014952e-003, -1.641317e-002, -2.710819e-002, -4.865238e-002, -2.056837e-002, -2.056837e-002, -4.865238e-002, 2.182685e-002, 4.770124e-002, 1.931625e-003, 2.088706e-002, 5.036150e-002, 2.116621e-002, 5.276490e-003, 8.389671e-003, 6.323651e-003, 8.202728e-003, 4.606033e-002, -2.521032e-002, -9.642906e-003, -9.642906e-003, -2.521032e-002, 7.469113e-002, -1.098701e-002, -7.198243e-003, -1.134652e-002, -4.591303e-002, 8.341187e-004, -7.680851e-003, -2.547562e-003, 5.791311e-004, -3.140783e-003, -4.743352e-002, -2.370226e-002, -7.634616e-003, -7.634616e-003, -2.370226e-002, 9.205009e-002, -2.543256e-002, -1.165243e-002, -4.183775e-003, -3.692600e-003, 1.328065e-002, -1.207560e-002, 6.712962e-004, -2.935261e-003, -9.090799e-003, -5.827515e-002, -6.907776e-003, 7.621202e-003, 7.621202e-003, -6.907776e-003, -5.194725e-002, 2.437767e-002, 1.578035e-002, -1.296498e-002, -1.593499e-002, -1.036499e-002, -1.042227e-002, 5.363218e-003, -9.424411e-004, -1.412478e-002},
{-4.495986e-004, 2.117983e-003, 5.384131e-003, 8.161339e-003, -6.751949e-003, -2.344822e-003, 8.221803e-004, -1.114623e-002, 4.539605e-002, -1.878285e-002, -1.972479e-003, -1.929438e-002, -1.972479e-003, -1.878285e-002, 4.539605e-002, -1.114623e-002, 8.221803e-004, -2.344822e-003, -6.751949e-003, 8.161339e-003, 5.384131e-003, 2.117983e-003, -5.445044e-002, 3.341580e-002, -7.743891e-003, -9.894130e-003, 1.923246e-002, 2.578279e-002, 3.104305e-003, -1.492654e-002, -1.213208e-002, 9.558920e-003, -2.898552e-002, -4.290325e-002, -8.094018e-003, 2.792385e-003, -1.894927e-002, 7.106028e-003, 3.000077e-002, 5.176513e-002, 9.430829e-003, -2.878426e-002, -1.170023e-002, -6.343984e-003, -2.766401e-002, 9.608004e-003, -1.534706e-002, -4.282376e-002, 2.698597e-002, -6.896916e-003, 1.493097e-002, 1.348327e-002, 3.973083e-002, -4.230005e-002, 1.332023e-002, -1.924854e-002, -2.122853e-003, 3.582058e-002, -3.020265e-002, -1.769471e-002, -2.076916e-002, -1.305619e-002, -5.227088e-003, -2.573628e-002, -1.731644e-002, -1.304344e-002, -6.253858e-002, -1.099053e-002, 2.865301e-002, -1.394096e-002, 2.764808e-002, -4.668425e-002, 3.497487e-002, 4.071807e-004, 1.598059e-002, -3.211347e-002, -1.005424e-001, -5.459703e-002, 2.360568e-004, 7.191554e-002, 4.721319e-003, -1.586438e-002, -8.692766e-003, -3.680543e-002, 4.750427e-003, 6.108673e-003, 3.183917e-002, -1.608481e-002, -3.895297e-002, 2.033643e-002, -1.060443e-002, 2.748264e-003, -2.159603e-003, -5.390787e-002, -5.701005e-002, 3.356416e-002, -4.041881e-003, -2.047021e-002, -4.715928e-002, 1.978714e-002, -3.135417e-002, -1.428815e-002, -2.880063e-002, -3.712720e-002, -3.123105e-002, -2.011102e-003, -2.552893e-002, 2.452670e-002, 1.059294e-002, 2.918301e-002, 6.205232e-003, 8.083623e-003, 1.212029e-002, -3.734949e-002, 2.389565e-002, 7.234935e-004, -1.097907e-002, 3.056706e-002, -1.768725e-002, -6.001677e-003, -

© ISO/IEC 2004 — All rights reserved


Copyright International Organization for Standardization
Provided by IHS under license with ISO
No reproduction or networking permitted without license from IHS
Not for Resale

4.643420e-002, 1.852430e-002, -3.656780e-002, -1.050018e-002, -1.116086e-001, -7.109114e-002, 1.694285e-002, -2.226274e-002, 1.779444e-002, 2.938206e-002, -7.419545e-003, -1.828273e-002, -1.789767e-002, 3.680852e-003, -6.296522e-003, 2.115439e-002, 1.978065e-002, 9.107019e-002, 6.835931e-002, 2.684766e-002, -8.567053e-003, -6.372135e-002, -2.078103e-002, -1.719672e-002, -1.013380e-002, -7.617237e-003, -4.071898e-002, -9.210600e-003, 6.616283e-002, 3.859766e-002, 1.309843e-002, -2.273222e-003, -7.723746e-004, -8.293023e-003, -1.145827e-002, 3.589281e-002, 4.338494e-002, 1.124163e-002, -2.680502e-003, 3.826749e-003, -4.836878e-003, 2.775144e-002, 7.952404e-003, 3.487995e-002, 1.256559e-002, -1.467212e-002, -6.264071e-003, 1.701195e-002, -8.682563e-003, -3.069931e-002, -8.183909e-004, 2.157899e-002, 7.961450e-003, 3.376862e-002, 5.505612e-003, 5.949792e-002, -2.237621e-002, 2.225593e-003, 2.631916e-002, 1.487595e-002, -1.131118e-002, -3.741848e-002, -1.862100e-003, 3.642628e-002, 5.385979e-002, 5.224027e-002, 2.905723e-002, 4.885326e-003, -3.634024e-003, -6.729485e-003, 1.427411e-002, 2.877932e-004, 5.722606e-003, 5.192915e-002, 5.266993e-002, -1.308703e-002, 2.945195e-002, 2.403608e-002, 2.165433e-002, 3.393949e-003, -1.767937e-002, 2.359403e-002, 2.217272e-002, -1.747444e-002, 3.363840e-002, 2.063592e-002, 2.136302e-002, 4.460410e-002, 6.921302e-003, -1.045812e-002, -1.901673e-003, 5.848939e-004, -6.792755e-003, 4.120732e-002, 3.831503e-002, 8.817878e-002, 3.932153e-002, 7.752301e-003, 6.855495e-002, -2.227418e-002, -5.803941e-003, -4.228761e-002, -9.916766e-003, -1.299175e-002, 2.167473e-002, -2.152127e-002, 4.783040e-002, 4.228243e-002, 2.523737e-002, 6.487773e-003, 3.855370e-006, -1.331704e-002, -1.773850e-002, 6.369607e-003, -5.283725e-004, 1.643882e-002, 5.086949e-002, 1.049608e-002, -6.374162e-003, -4.281113e-002, 4.329713e-002, -1.222671e-003, -5.053001e-002, 2.029608e-002, 6.516191e-002, 9.275495e-002, 4.988461e-002, 4.434209e-002, 1.115584e-002, -7.785746e-003, 6.567611e-003, 2.032325e-002, 3.369824e-003, 2.331914e-003, 5.485182e-003, 1.895208e-002, 2.474158e-002, 1.841955e-002, 9.948444e-003, 1.063444e-002, 2.556355e-003, -9.720909e-002, -4.082151e-002, -2.036863e-002, 2.458305e-003, -5.864591e-003, 7.889392e-002, 1.601748e-002, 2.880617e-002, -1.070471e-002, 1.795721e-002, 2.593162e-004, 7.645137e-003, 1.032992e-002, 6.439609e-003, 7.091683e-003, 1.331756e-002, 2.517968e-002, 8.438161e-003, 1.597105e-002, 1.526133e-002, 3.914756e-003, -7.107973e-003, -4.290743e-002, -1.234382e-001, -1.894593e-002, -6.066013e-002, 1.028450e-002, 4.196122e-003, 2.890746e-002, 4.840565e-002, 2.976444e-002, 3.385778e-002, -8.595642e-004, 9.967012e-003, 1.858931e-002, 5.750379e-003, 7.516449e-003, 1.278070e-002, 2.239786e-002, 1.175990e-002, 1.077579e-002, 3.431402e-002, 2.503198e-004, 1.199104e-002, -2.141193e-002, -4.318510e-002, -3.104138e-002, -4.667709e-002, -5.586947e-002, 1.674286e-003, 1.091338e-002, -2.157930e-002, 1.381273e-002, 1.381273e-002, -2.157930e-002, 1.091338e-002, 1.674286e-003, -5.586947e-002, 9.344666e-002, 1.044631e-001, -7.351587e-002, -2.769283e-002, -1.638113e-001, -9.896125e-002, 3.746582e-003, 4.345297e-002, 9.160638e-002, -8.099317e-002, -3.360630e-002, -5.362715e-002, 4.486415e-002, 1.426794e-002, -1.288270e-002, 1.532299e-002, -1.614825e-002, 1.057068e-002, 3.068750e-003, 1.649317e-002, -5.219151e-002, -2.850810e-004, -4.739614e-003, 1.738673e-002, 7.310452e-002, 7.339991e-002, 1.625087e-002, 3.768445e-003, 8.995922e-003, -4.113327e-003, 4.848257e-003, 2.553155e-002, -4.542629e-002, 6.578558e-002, 4.466345e-002, -1.556692e-002, -1.005693e-003, 3.245325e-002, 2.801643e-002, 4.970094e-003, -1.138747e-003, 3.779420e-004, -2.375562e-003, 5.825689e-002, 3.466165e-002, 2.288487e-002, -1.907818e-002, -1.546289e-003, 1.770832e-002, 8.881940e-003, -3.342506e-004, 2.575722e-003, 9.075124e-003, -6.179105e-003, 2.779316e-002, -9.354343e-003, -1.224407e-002, -9.989897e-003, 1.002110e-005, 6.492218e-003, 1.288288e-002, 3.315832e-003, 5.873825e-003, 1.075659e-002, 8.425339e-003, -2.713388e-002, 7.994815e-003, -5.515966e-002, 3.836846e-003, -2.926591e-003, -2.371693e-002, 9.426528e-003, 9.426528e-003, -2.371693e-002, -2.926591e-003, 3.836846e-003, -5.515966e-002, 4.359581e-002, 2.020920e-002, 2.362793e-003, 6.941418e-002, 3.611999e-002, 1.584078e-002, -9.815837e-002, -1.263490e-001, -8.318037e-002, -3.386117e-002, 6.550377e-002, -3.908863e-003, 4.588089e-002, -2.025015e-002, 3.274331e-002, 3.850281e-002, 2.255080e-003, 6.932461e-003, 4.765490e-002, 4.099595e-002, -6.228505e-002, -5.653149e-002, 1.094755e-001, 1.276852e-002, 2.873139e-002, 2.118065e-002, 1.896386e-002, 6.893019e-003, -5.522000e-004, -1.000813e-002, -2.715864e-003, -2.586588e-002, 4.427998e-002, 2.432099e-002, 1.114372e-002, -6.381666e-003, 1.287227e-002, 8.660828e-003, 7.711022e-003, -4.151865e-003, 4.548193e-003, 6.155155e-003, -2.400313e-002, -1.483262e-002, -9.951525e-003, 2.888751e-002, 1.199731e-003, 7.262513e-003, 4.433096e-003, 3.219151e-003, -2.216873e-003, -3.425909e-004, -2.170123e-003, -1.816582e-002, -4.185492e-003, -1.263604e-004, 5.604161e-003, 8.399203e-003, 1.077170e-002, 2.868229e-003, 3.254349e-003, 6.047740e-003, 4.207980e-003, -2.779705e-003, -4.466403e-002, -3.188294e-002, 3.001804e-002, 2.319716e-002, -1.910824e-003, 6.965308e-003, 2.635228e-002, 5.556798e-003, 5.556798e-003, 2.635228e-002, 6.965308e-003, -1.910824e-003, 2.319716e-002, 2.585062e-002, 8.341572e-002, -4.612069e-002, -8.916156e-003, 2.895889e-002, -8.794614e-003, -9.431349e-003, -7.765481e-002, 3.106522e-002, -8.030944e-002, 7.015996e-002, 4.926352e-002, -3.615072e-002, -6.550686e-002, -5.270954e-002, -9.305288e-003, -1.624650e-002, -2.993454e-002, -3.963997e-002, -4.453498e-002, 5.550926e-002, -2.535139e-002, 1.782372e-002, 8.780125e-002, -3.199021e-002, -1.014905e-002, -7.653291e-003, -5.741344e-003, -4.291010e-003, -1.723428e-003, 3.577700e-002,


--`,,```,,,,````-`-`,,`,,`,`,,`---
© ISO/IEC 2004 — All rights reserved

Copyright International Organization for Standardization
Provided by IHS under license with ISO
No reproduction or networking permitted without license from IHS
Not for Resale

1.328699e-001, -5.955851e-002, 5.837053e-002, 7.262972e-002, 7.933962e-003, -8.826803e-003, 6.495867e-003, 9.523378e-004, 3.128995e-003, 9.492594e-003, 2.528444e-002, 6.399270e-002, 2.436474e-002, 5.092235e-002, 1.180654e-002, 1.049128e-002, 5.825428e-003, -7.545453e-003, -1.097820e-003, -6.155714e-003, 5.818074e-003, 1.696091e-002, 1.150384e-003, 2.177193e-002, 2.707629e-002, 2.720127e-002, 4.216011e-002, 2.374213e-003, -1.017215e-003, -4.377708e-003, 7.987080e-003, 7.938583e-003, 9.429788e-003, 3.986765e-003, -1.957780e-002, 8.214638e-003, 2.829884e-002, -1.221958e-003, 1.559676e-003, 1.107836e-002, 2.545454e-002, 2.545454e-002, 1.107836e-002, 1.559676e-003, -1.221958e-003, 2.829884e-002, -4.792033e-003, 1.852277e-002, -6.648200e-002, -2.111398e-002, 4.128974e-002, 1.271483e-002, 3.092503e-002, 4.659733e-002, 2.498892e-002, 3.949527e-002, -3.932390e-003, 8.156622e-002, -1.980743e-002, 1.432728e-002, 1.243350e-002, -1.735685e-002, -1.169438e-002, 4.270988e-003, 1.492393e-003, -2.007442e-002, -9.072091e-003, -9.276305e-003, 4.389770e-002, -7.592898e-002, 6.290401e-002, 1.456614e-002, -1.012451e-002, -1.305742e-002, -6.457292e-003, -8.025453e-003, -1.103657e-002, 2.338625e-002, 1.224602e-001, -2.607584e-002, 1.547209e-002, 5.376630e-002, -1.593343e-003, 1.491290e-002, 6.140753e-003, -5.615728e-004, -4.619990e-004, 1.086305e-002, 7.815545e-002, 6.968032e-002, -1.718693e-002, 1.008781e-002, 8.473836e-003, 2.069317e-002, 4.376134e-003, -8.312481e-004, 1.172967e-003, 4.179423e-003, 2.159096e-002, 1.963916e-002, -5.888099e-003, -7.785607e-003, -5.585799e-003, 2.046432e-002, 9.922712e-003, 9.521284e-003, 2.577523e-003, 3.238850e-003, 1.012270e-002, 1.893777e-002, 5.581073e-003, 1.507579e-002, 1.126183e-002, -3.322945e-002, -2.254636e-003, -2.254636e-003, -3.322945e-002, 3.628689e-002, 2.031817e-002, -1.389538e-002, 9.133199e-003, 2.176861e-002, 1.036505e-002, 4.977651e-003, 2.890489e-002, 6.103228e-003, 4.630481e-003, -3.535084e-002, -3.857622e-002, -8.643393e-003, -8.643393e-003, -3.857622e-002, -9.435441e-002, 2.010093e-002, 1.098196e-002, 1.144680e-002, 1.096900e-002, -2.313807e-002, 3.145744e-003, 1.410931e-003, -5.087717e-004, 2.649356e-003, 1.066846e-001, 8.181425e-002, 2.086217e-002, 2.086217e-002, 8.181425e-002, 8.172960e-002, 2.888785e-002, 7.614828e-003, 1.165588e-002, 3.206944e-002, 1.061620e-002, 3.560164e-003, 7.798159e-005, 6.902294e-003, 5.423626e-003, -8.212022e-002, 1.841424e-002, 3.103124e-002, 3.103124e-002, 1.841424e-002, 2.201158e-002, 4.272270e-002, 1.389042e-002, 3.500838e-003, -6.825126e-003, 8.767265e-003, 1.235911e-002, 6.675818e-003, 6.067863e-003, 1.111167e-002, 2.800221e-002, 3.862300e-002, -2.829595e-002, -2.829595e-002, 3.862300e-002, 3.461052e-002, 2.497264e-002, -1.055533e-002, 1.299298e-002, 2.154479e-002, 1.378532e-002, -1.336467e-003, -1.897888e-003, 5.162927e-003, 9.450619e-003, -5.059029e-002, 1.672002e-002, 8.337073e-003, 8.337073e-003, 1.672002e-002, -2.494019e-002, 2.434472e-002, -5.181093e-003, -4.706196e-003, -5.481864e-002, 5.250076e-002, 2.074136e-002, 4.775951e-003, 6.481556e-005, 7.201295e-003, -4.727722e-003, -6.240120e-002, -2.228694e-002, -2.228694e-002, -6.240120e-002, 2.823277e-003, -4.049701e-002, -1.081900e-002, -1.375661e-002, -3.664848e-002, -1.239528e-002, 1.278201e-003, 3.344602e-003, -8.147579e-003, -1.328936e-003, -1.184183e-002, 8.600914e-002, -1.957371e-002, -1.957371e-002, 8.600914e-002, 2.943827e-002, 3.005984e-002, 3.115139e-002, 4.247326e-003, 3.384796e-002, 1.139585e-002, -7.068528e-004, 7.542444e-003, -1.042394e-002, -8.449669e-003, 3.523511e-002, -3.636611e-002, 4.994213e-004, 4.994213e-004, -3.636611e-002, -1.342198e-002, 6.916916e-003, 9.396357e-004, -2.473055e-002, -4.718960e-002, 2.971082e-003, 6.834184e-003, 1.766857e-003, -4.272169e-003, 1.014249e-002, 6.879827e-002, -1.330771e-001, -2.995910e-002, -2.995910e-002, -1.330771e-001, -8.556892e-002, -6.205518e-002, -9.663986e-003, -1.506935e-002, -2.645208e-003, 4.588875e-002, -7.741843e-003, 7.358497e-003, 2.777954e-003, 2.842255e-002, -1.056709e-002, -1.646266e-001, -5.804426e-002, -5.804426e-002, -1.646266e-001, -9.886100e-002, -1.453729e-002, -1.514456e-002, -1.451888e-002, -5.213654e-002, 1.773270e-002, 1.760037e-002, 2.273901e-003, -3.945958e-003, -1.317664e-002, 2.083935e-002, -7.940760e-002, 5.039947e-003, 5.039947e-003, -7.940760e-002, 8.111379e-002, 2.918914e-002, 1.330446e-002, 1.281156e-002, 3.357699e-002, 3.081204e-002, 2.115552e-002, 1.132008e-002, 1.289323e-002, 2.456898e-002, -3.356870e-002, 2.731152e-003, -5.255928e-002, -5.255928e-002, 2.731152e-003, -2.190752e-002, -9.568497e-004, 1.166574e-002, -2.838957e-002, -4.376080e-004, 3.270687e-002, 2.486200e-002, 3.040687e-004, 1.837647e-003, 1.518178e-002, -4.044665e-002, 2.900757e-002, 8.813119e-003, 8.813119e-003, 2.900757e-002, 1.650582e-002, 9.455072e-003, 1.077782e-002, 1.415994e-002, 5.125731e-002, 2.073117e-002, 9.230181e-003, 2.797136e-003, 1.533237e-002, 2.879409e-002, 3.520684e-003, 1.245327e-002, -2.977766e-004, -2.977766e-004, 1.245327e-002, 6.607094e-002, 8.247602e-003, 5.643738e-003, 2.593749e-003, 1.206260e-002, 3.155014e-003, 7.446596e-003, 2.174722e-003, -3.090654e-004, 5.207783e-003, -5.578302e-003, -4.232554e-002, -3.660313e-002, -3.660313e-002, -4.232554e-002, -3.425965e-002, -4.364786e-002, -1.728151e-002, 1.658375e-002, 2.178284e-002, -1.813664e-002, -3.822005e-003, -4.058106e-003, -3.091694e-004, 3.020873e-002},
{4.341416e-003, -3.157616e-003, 5.843513e-003, -1.403200e-002, -9.844320e-003, -6.058375e-004, 1.941505e-003, 4.603516e-003, 1.115424e-002, 3.459021e-003, -4.279695e-004, -7.668383e-003, -4.279695e-004, 3.459021e-003, 1.115424e-002, 4.603516e-003, 1.941505e-003, -6.058375e-004, -9.844320e-003, -1.403200e-002, 5.843513e-003, -3.157616e-003, -3.292629e-003, -3.164483e-003, 2.731195e-003, 8.294758e-003, 1.115138e-002, -1.825455e-004, -1.170071e-002, -5.118771e-003, 1.070637e-002, 5.193635e-003, -

© ISO/IEC 2004 — All rights reserved


Copyright International Organization for Standardization
Provided by IHS under license with ISO
No reproduction or networking permitted without license from IHS
Not for Resale

2.054158e-002, 8.325872e-004, -7.576083e-003, -5.097780e-002, 6.722603e-003, -1.744233e-003, 4.500740e-003, 5.963714e-004, 1.132470e-002, -1.505606e-002, -7.902187e-003, -6.091002e-004, -4.231589e-002, -5.102566e-002, -1.370363e-002, -9.040815e-003, 2.466151e-003, -1.674893e-002, -1.795420e-002, -1.444631e-003, -3.106230e-002, -2.197078e-002, -3.300977e-002, -1.757590e-002, -4.060294e-004, 4.524207e-003, 4.036358e-004, 3.443366e-003, -3.082903e-003, -1.147463e-002, -3.274158e-003, -1.221020e-002, -1.686512e-002, -1.307440e-002, 7.886572e-003, 3.243181e-002, 2.328598e-002, -1.480387e-003, 1.977054e-002, 2.789240e-002, 3.592221e-002, -1.222039e-002, -3.809402e-002, -2.934600e-002, -1.725008e-002, 4.871279e-003, 1.130891e-002, -3.917285e-003, 5.151231e-002, 2.110424e-002, 6.344462e-003, 6.209335e-003, -2.637201e-002, -1.814486e-002, -1.059940e-002, 3.121079e-002, -9.650623e-004, 1.580590e-002, -1.528884e-002, -1.763285e-002, -1.922884e-002, -2.444552e-002, 2.552137e-002, 3.117361e-002, -3.472559e-002, 2.300344e-002, -1.492479e-002, -1.840759e-002, -4.503770e-003, -2.343565e-003, 8.082342e-003, 3.202900e-002, -3.057937e-002, -2.020704e-002, -2.945718e-002, 3.393180e-002, 9.069187e-003, 2.201706e-002, -1.175287e-002, 1.709435e-002, -5.276038e-003, -5.103827e-003, 5.045572e-003, 9.041446e-003, -3.130617e-003, 2.117431e-002, -4.871445e-002, 1.238575e-002, -1.644390e-002, 2.626867e-002, 3.790589e-003, -3.989985e-002, 1.510472e-002, -1.157381e-002, -5.031897e-002, -9.917279e-003, -1.425024e-002, -2.428110e-002, -8.368601e-003, -6.483069e-003, 1.884415e-003, -1.044171e-002, 4.022759e-003, 2.751583e-002, -8.276326e-003, -6.802285e-004, 7.846187e-003, -7.771388e-002, -1.017721e-002, 2.712854e-002, 1.212828e-002, 2.051197e-002, 6.206250e-003, -6.197286e-003, 4.865888e-003, 2.656599e-002, 1.186724e-002, 3.648639e-002, -2.012631e-002, 3.815241e-003, 4.219135e-002, -5.534819e-003, 1.551689e-002, 1.243051e-002, 2.060021e-002, 5.691662e-002, -3.392547e-003, 4.996155e-002, -2.630725e-002, -1.823658e-002, 1.981374e-002, 2.605937e-002, 1.483599e-002, -1.510872e-002, -3.275306e-002, -1.547408e-002, 2.237214e-002, 6.704634e-003, -3.333239e-002, -3.933684e-002, -1.401096e-002, 9.352172e-003, 3.876806e-002, 5.030834e-003, -3.774056e-002, -4.417939e-003, 6.424917e-002, 1.396841e-002, 5.567570e-002, -3.880958e-002, -1.117147e-002, 5.448138e-002, -1.442109e-002, 6.864031e-003, 2.966628e-002, -2.620062e-003, 2.705283e-003, -1.223873e-002, -8.712118e-003, -7.628169e-003, 4.411690e-004, -8.388461e-003, -3.876652e-002, -2.278411e-002, 4.039748e-002, 2.506834e-002, 3.172302e-002, -4.502779e-002, 2.274356e-002, 4.439521e-002, -3.326672e-003, -3.629425e-002, -5.597610e-002, -1.281636e-002, 6.345868e-003, 2.215535e-004, 2.429414e-002, 1.369979e-002, 7.916535e-003, 1.413624e-002, 1.522657e-002, -1.822291e-002, -2.046650e-002, -2.067640e-002, -5.292726e-003, -3.117812e-002, 2.125864e-002, 2.386793e-002, -1.238694e-002, -5.111347e-003, 9.403767e-003, 1.509591e-002, 3.585611e-002, 3.040300e-002, 1.038465e-002, 1.236051e-003, -1.090772e-002, -4.678479e-003, 1.298807e-002, 1.267151e-003, 1.384811e-002, -5.957863e-003, 1.116041e-002, 2.022649e-002, -1.144608e-002, -4.335168e-003, 5.630407e-003, -3.376837e-002, 2.355250e-002, 4.869115e-002, 1.654424e-002, 1.966917e-002, 9.050539e-003, 2.792544e-003, -3.079283e-003, 2.803750e-002, 3.798371e-002, -3.666196e-003, -1.166365e-002, -1.038605e-002, 3.571093e-003, 3.996642e-003, 9.486636e-003, -1.542777e-003, -1.389800e-002, 6.830705e-003, 2.209429e-002, 3.961435e-002, 3.559958e-002, -1.042937e-002, -1.311737e-002, -9.282120e-003, 1.738144e-002, -4.491774e-002, -3.745684e-002, -2.471550e-002, 4.074041e-002, 2.449177e-002, 1.164636e-003, -1.704489e-003, -3.210792e-003, 2.463615e-004, 8.654690e-003, 6.493162e-003, 8.727535e-003, 7.282454e-003, -8.317707e-003, -1.231762e-002, 2.530458e-002, 3.964420e-002, 3.887297e-002, 2.891441e-002, 1.648010e-002, -3.962343e-002, 9.121275e-003, -6.615899e-003, -4.711349e-003, 3.385601e-002, 2.687229e-002, 4.339265e-002, 1.778812e-002, 9.687117e-003, 2.853385e-003, -3.246962e-003, 4.186368e-003, 6.695567e-003, 2.796132e-003, -4.122735e-003, 5.994448e-003, -6.772899e-004, 9.436796e-003, 1.341705e-002, 1.821674e-002, 9.947409e-003, 2.401613e-002, -2.911713e-003, 3.399177e-002, -1.650145e-002, -2.694415e-002, -7.598737e-003, -7.631528e-003, 1.189033e-002, 1.189033e-002, -7.631528e-003, -7.598737e-003, -2.694415e-002, -1.650145e-002, 7.997406e-002, 3.629617e-002, 5.122745e-002, -1.544926e-003, 3.697105e-002, 2.717344e-002, 2.751562e-002, 8.030115e-003, -5.228853e-002, -3.629301e-003, -4.808889e-002, 2.910479e-003, 1.127278e-002, -6.061079e-002, -1.696157e-002, -1.305150e-002, -1.015157e-002, 8.455128e-003, 1.000886e-002, -1.686680e-002, -5.438227e-002, 9.230789e-002, -9.121570e-003, -1.320908e-001, -1.205422e-001, -2.396643e-002, -7.586400e-003, 4.792156e-003, 5.575084e-003, 1.518289e-002, 1.453893e-002, 1.674457e-002, 4.155768e-002, 2.221726e-003, -4.610432e-002, -4.745141e-002, -1.997552e-002, -5.945494e-003, 5.703330e-003, 4.835433e-003, 1.933105e-002, 2.009165e-002, 4.290502e-002, -2.768849e-002, -4.401562e-002, -1.805100e-002, 1.284352e-002, -4.694596e-003, -5.682502e-003, 4.995803e-003, 8.857165e-003, 1.888370e-002, 1.643988e-002, 2.732431e-002, -3.879007e-003, 2.029720e-002, -2.856156e-002, 8.722018e-003, -2.497058e-003, -6.081536e-004, 2.036337e-003, 6.642651e-003, 1.188524e-002, 8.390041e-003, 5.431359e-003, 1.508488e-003, 3.660715e-004, -1.359267e-002, -1.519968e-002, 7.233597e-003, -2.901529e-002, -5.733005e-003, -5.733005e-003, -2.901529e-002, 7.233597e-003, -1.519968e-002, -1.359267e-002, 9.646964e-002, -1.477711e-001, -3.799041e-002, -8.060766e-003, -1.095293e-002, 2.783028e-003, 7.054201e-003, 2.572910e-002, -1.185412e-002, 5.847808e-002, 9.923615e-002, -1.106663e-001, -5.173946e-002, -1.984075e-002, -1.156148e-003, 4.173989e-003, 7.925307e-003, 2.312234e-004, 4.814118e-003, -1.621159e-003, -


© ISO/IEC 2004 — All rights reserved

Copyright International Organization for Standardization
Provided by IHS under license with ISO
No reproduction or networking permitted without license from IHS
Not for Resale

1.170216e-001, -5.375158e-002, -6.033078e-003, 5.297725e-002, 4.120516e-002, 1.771032e-002, 1.712715e-002, 1.438779e-002, 1.637663e-002, 2.561402e-002, 5.015391e-002, -1.169353e-002, -8.110315e-002, -1.043746e-002, 4.175852e-002, 5.209291e-002, 1.598398e-002, 1.351606e-002, 1.417802e-002, 1.151934e-002, 2.179163e-003, 2.226959e-002, 1.860139e-002, -8.881855e-003, -4.937872e-002, 1.064527e-002, 3.391624e-002, 2.254682e-002, 1.562518e-002, 9.960945e-003, 1.089773e-002, 1.139683e-002, 9.165487e-003, 1.549592e-002, -1.615866e-002, -2.338110e-002, 6.699706e-003, 2.113740e-002, 1.679837e-002, 1.296404e-002, 1.234518e-002, 1.288080e-002, 1.647517e-003, 1.747092e-002, 4.838027e-002, -2.265206e-003, -2.512010e-002, 2.997497e-003, 1.000760e-003, -1.485174e-002, -1.503609e-002, -4.844771e-002, -4.844771e-002, -1.503609e-002, -1.485174e-002, 1.000760e-003, 2.997497e-003, -6.002443e-003, 1.523584e-002, 5.051855e-003, 3.215332e-003, 1.643114e-002, 3.373376e-003, -3.904627e-002, 2.964082e-002, -3.756479e-002, -2.164353e-002, 1.721318e-003, 4.293929e-002, 4.687476e-002, 4.341954e-002, -2.409359e-003, 8.677842e-003, 1.111958e-002, 4.889185e-003, -2.095904e-002, -6.048073e-002, 4.485361e-002, -9.030188e-002, -8.128554e-003, -7.671215e-002, 5.260466e-002, 2.267560e-002, 3.694797e-003, 2.357499e-003, -2.939255e-002, -3.361435e-002, -4.866464e-002, -9.896614e-002, 3.705968e-002, 2.569083e-002, -5.380939e-002, 9.082982e-004, 1.340213e-002, 2.332559e-003, 1.537385e-003, -2.033587e-002, -2.545822e-002, -1.457000e-002, -4.689273e-002, -6.669708e-002, 1.446083e-002, 2.442850e-003, 2.604949e-003, 2.723417e-003, 6.590979e-003, 1.001477e-003, -3.716398e-003, -6.836202e-003, -1.528703e-002, -2.116213e-002, -3.298380e-002, 1.340313e-002, -1.070601e-002, -5.228755e-003, -2.108470e-003, -1.024022e-003, 7.765165e-003, -4.778693e-003, -7.829501e-003, 3.282187e-004, -7.112980e-003, -1.024761e-003, -4.896323e-003, -1.276306e-002, -2.147081e-002, -1.316919e-002, -1.066713e-002, -1.726555e-002, -1.726555e-002, -1.066713e-002, -1.316919e-002, -2.147081e-002, -1.276306e-002, 6.682382e-003, 2.156435e-002, -8.703940e-002, 2.784773e-002, -3.666905e-002, -1.227337e-002, -9.074373e-003, -1.677226e-002, 1.650885e-002, -3.676642e-002, 2.132377e-002, 3.932995e-002, 6.888084e-004, -3.322287e-002, 2.412770e-002, 7.380290e-003, -1.210646e-002, 8.864652e-003, 1.420575e-002, 3.093768e-002, 4.011442e-002, 3.963697e-002, 2.220660e-002, -5.389827e-002, 3.235792e-002, 1.946644e-002, -7.889255e-003, -5.072849e-003, 1.045241e-002, 2.400390e-002, 3.590692e-002, 4.334873e-002, -2.247501e-002, -7.899487e-002, -5.096716e-002, -7.536531e-003, 2.262608e-002, 1.232869e-003, 2.260491e-003, 4.578071e-004, 1.353897e-002, 9.119954e-004, -1.794301e-002, -4.140155e-002, -1.381004e-002, -1.144873e-002, -6.406752e-003, -2.138826e-003, 8.232611e-003, -2.436615e-003, -2.146124e-003, -1.465846e-003, -2.701365e-004, -1.923387e-003, -4.047062e-003, 3.171139e-003, -1.635291e-002, -6.256580e-003, 5.393008e-003, 1.896203e-003, 5.691376e-003, -1.312322e-004, 2.275543e-003, 1.268638e-002, 5.960203e-003, -2.084215e-002, -8.923972e-003, 2.695606e-002, 6.173274e-003, 6.173274e-003, 2.695606e-002, 7.763399e-002, 5.387423e-002, 1.064695e-002, 1.493559e-003, -5.393896e-003, 3.158871e-002, -1.310519e-002, -6.903807e-003, -5.033917e-004, 1.007070e-002, -5.360258e-002, -1.714788e-002, -1.043537e-002, -1.043537e-002, -1.714788e-002, -9.498325e-002, -4.513061e-002, -1.735479e-002, -1.799173e-002, -3.895876e-002, 2.980030e-002, -3.825815e-002, -1.289284e-002, -2.157352e-003, -5.066754e-004, -2.556555e-002, -1.214903e-002, -1.905952e-003, -1.905952e-003, -1.214903e-002, -2.382211e-001, -3.364368e-002, -9.870125e-003, -2.227267e-002, -6.780691e-002, 9.898177e-003, 3.289879e-003, 1.520544e-003, -1.103788e-002, -1.968440e-002, -2.035963e-002, 8.504496e-003, 1.191384e-002, 1.191384e-002, 8.504496e-003, 1.347840e-001, -1.118525e-003, -2.556916e-003, 1.334307e-002, 5.789767e-002, 5.790896e-002, 1.928831e-002, 2.703080e-003, 1.734251e-002, 1.541146e-002, -3.201904e-002, 4.722791e-002, 1.670398e-002, 1.670398e-002, 4.722791e-002, 1.420583e-002, -1.402973e-002, 7.426880e-003, 1.488631e-002, -1.254397e-002, 5.491824e-003, 3.339039e-003, 3.591585e-003, 5.063155e-003, -1.895497e-003, 1.285374e-001, -8.279143e-002, -1.700368e-002, -1.700368e-002, -8.279143e-002, 2.008250e-001, 9.232630e-003, 9.923382e-003, 1.313212e-002, 5.479439e-002, -1.456586e-002, -2.236869e-002, 4.427047e-003, 1.241171e-002, 1.264489e-002, 3.797631e-002, 2.301236e-002, 2.112367e-002, 2.112367e-002, 2.301236e-002, 1.730724e-001, 6.383598e-002, 2.169795e-002, 2.389457e-002, 4.202065e-002, 1.572861e-002, 1.986748e-002, 9.184163e-003, 1.357862e-002, 5.168093e-003, 8.314945e-003, 4.108551e-002, 8.952468e-003, 8.952468e-003, 4.108551e-002, -1.779986e-002, 5.857446e-003, -5.411983e-003, -1.575722e-003, -1.240524e-002, -4.349200e-003, 1.578691e-002, 3.408038e-003, 5.475181e-003, 7.918741e-003, -1.506198e-002, -1.088054e-002, 1.714059e-002, 1.714059e-002, -1.088054e-002, 1.031291e-001, 1.537851e-002, 4.904297e-003, 2.091427e-002, 7.955348e-002, 5.068278e-002, 1.313355e-002, 2.325401e-003, 1.100467e-002, 1.607738e-002, -9.470134e-002, 1.266776e-001, 3.663831e-002, 3.663831e-002, 1.266776e-001, 1.911551e-001, 1.103644e-001, 3.385800e-002, 2.730325e-002, 2.788585e-002, -4.230850e-002, 3.191413e-002, 1.310276e-002, 4.391980e-003, -1.891651e-002, -4.664854e-002, 1.644017e-001, 5.073514e-002, 5.073514e-002, 1.644017e-001, 2.197288e-001, 5.535817e-002, 3.990388e-002, 4.234314e-002, 1.063877e-001, -3.050879e-002, -7.267505e-003, 5.147136e-003, 1.494865e-002, 3.403837e-002, 1.393074e-002, 4.422180e-003, 3.562482e-002, 3.562482e-002, 4.422180e-003, 1.365972e-002, 3.415326e-002, 5.609552e-003, -1.067724e-003, -2.883438e-003, 1.907627e-002, 1.710617e-002, 9.256826e-003, -6.720603e-004, 8.502058e-003, 2.800437e-002, -1.549204e-002, 4.388576e-003, 4.388576e-003, -

© ISO/IEC 2004 — All rights reserved
--`,,```,,,,````-`-`,,`,,`,`,,`---


Copyright International Organization for Standardization
Provided by IHS under license with ISO
No reproduction or networking permitted without license from IHS
Not for Resale

1.549204e-002, -3.730567e-002, -6.611429e-002, -2.534215e-002, -3.256641e-002, -5.788823e-002, 2.840241e-002, -1.252369e-002, -9.674969e-003, -2.497773e-002, -3.265531e-002, 5.663885e-002, -2.527258e-002, 8.016911e-004, 8.016911e-004, -2.527258e-002, -2.804480e-002, -1.355372e-003, -1.267911e-003, -1.742592e-002, -1.000862e-002, -1.258540e-003, 8.494309e-003, 7.888255e-003, -8.221522e-003, -1.735329e-002, 6.876456e-003, 2.200040e-002, 9.700692e-003, 9.700692e-003, 2.200040e-002, -1.815035e-002, 1.632446e-002, 2.974286e-003, 9.051718e-003, 6.519619e-003, -3.904282e-003, 1.624978e-002, 2.531664e-003, 9.332031e-003, 1.517663e-002, 2.094502e-002, 1.139375e-003, -5.912091e-003, -5.912091e-003, 1.139375e-003, -2.412737e-002, -6.092732e-002, -2.187389e-002, -1.980607e-002, -4.013738e-002, -2.474330e-002, -1.894389e-002, -4.205885e-003, -1.053332e-002, -3.237905e-002},
{-2.382832e-003, 3.330804e-003, -4.402499e-003, -2.582905e-003, -1.655868e-002, -2.749796e-003, -2.535600e-004, -9.345122e-003, 1.011047e-002, 7.674025e-003, -2.047722e-002, -2.695454e-003, -2.047722e-002, 7.674025e-003, 1.011047e-002, -9.345122e-003, -2.535600e-004, -2.749796e-003, -1.655868e-002, -2.582905e-003, -4.402499e-003, 3.330804e-003, 1.261132e-002, -3.926195e-003, -1.859007e-002, -6.004839e-003, -1.812808e-003, 6.152371e-003, 2.966723e-002, 6.038471e-003, -2.123830e-002, 1.142947e-002, -1.000248e-002, -5.093021e-003, -2.286053e-002, 2.556516e-002, 2.639864e-002, 1.106316e-002, 1.968987e-002, 3.055526e-002, 2.760586e-002, -2.957234e-003, -1.567606e-002, -1.750901e-002, -2.788586e-002, -2.462561e-002, 9.934218e-003, -8.600962e-003, 1.757574e-002, 3.120764e-003, 3.903391e-002, 2.307339e-002, 3.348552e-002, 3.537825e-002, -1.256016e-002, -2.639114e-002, 2.850028e-002, 4.721468e-002, 4.564673e-003, 3.208679e-002, 3.658146e-002, 2.403787e-002, 1.307282e-002, 2.069778e-002, 6.730209e-003, -1.729857e-002, 1.280049e-002, 1.170339e-004, -9.901283e-003, -8.881208e-003, 4.935505e-002, 5.794209e-002, 2.712995e-002, 3.582156e-002, -7.071327e-003, 5.665632e-002, -8.676925e-003, 3.529876e-002, -4.772102e-003, 2.916171e-004, 1.485396e-002, 2.868818e-002, 1.343341e-002, 5.726787e-002, 9.343014e-003, 1.009287e-002, -2.098597e-002, -1.327417e-004, -1.776402e-002, -2.325278e-002, 5.451467e-003, 5.263343e-003, -1.269771e-003, -4.029121e-003, -5.225601e-004, 2.665074e-002, -4.577933e-002, 6.387972e-003, 8.560969e-002, -1.675952e-002, -2.461526e-002, -1.217894e-002, 9.656703e-003, 1.364651e-002, -1.041135e-002, 2.590011e-002, -4.023123e-002, 5.863158e-003, 3.202900e-002, -2.844876e-003, 8.405037e-003, 1.779525e-002, 1.519720e-002, 7.240063e-004, 2.515905e-002, 4.114118e-002, 2.871930e-002, 7.413764e-002, -1.476072e-002, 9.771320e-003, -1.230834e-002, 6.836053e-003, -1.417515e-002, 1.145206e-002, 2.395826e-002, -2.089911e-002, 3.436802e-002, 3.398744e-003, -2.468537e-002, -2.491761e-002, 4.706630e-003, -8.010718e-003, 1.514496e-002, -1.823744e-002, -1.811350e-002, -3.160154e-003, 1.885849e-002, -1.761476e-002, 2.748567e-002, -2.136375e-002, 2.170818e-002, 1.638846e-002, -1.860861e-003, 6.969418e-003, 4.328161e-002, 1.511073e-002, -2.992411e-002, -1.080188e-003, 1.669282e-002, -6.023960e-003, -3.407671e-002, -1.458785e-002, -1.188384e-002, -1.502438e-002, 9.744708e-002, -3.307065e-003, -1.832396e-004, -5.118321e-003, -7.042719e-003, -1.260612e-002, -1.593519e-005, -3.560740e-002, -1.255358e-003, 2.418660e-002, 1.061641e-002, -2.073923e-003, 5.741877e-003, 8.580421e-003, -3.628657e-002, -2.005289e-002, -2.667176e-002, 1.547254e-002, 3.583810e-003, -6.317332e-003, 9.238620e-003, -1.606126e-002, 4.498069e-002, 1.892509e-002, 1.402773e-002, -1.798510e-002, -1.817514e-003, -6.354797e-003, 1.029115e-003, 2.558160e-002, 1.314388e-003, 1.536387e-002, 3.139322e-003, -8.401352e-003, -3.336072e-002, 3.935444e-003, -1.919241e-002, -7.075129e-002, 3.485019e-003, 1.535070e-002, -2.338729e-002, 4.854119e-002, 3.586600e-002, -3.962993e-002, -1.267942e-002, -5.564237e-002, -1.422829e-002, -9.525853e-003, 9.650034e-003, -3.529777e-002, 4.908232e-002, -7.023731e-003, -8.357477e-003, -1.163440e-002, -1.731977e-002, -3.196083e-002, -4.939928e-002, -2.046522e-002, -2.871993e-002, -3.070308e-002, 1.177741e-002, 2.552923e-002, -3.034342e-002, 9.219196e-003, 3.800131e-002, -8.848553e-003, 8.646219e-003, 2.755454e-002, -2.454707e-002, 2.462670e-002, -6.195137e-002, -5.578438e-002, -3.523238e-002, -2.367404e-002, -7.541666e-003, -4.323239e-003, -3.961622e-003, 9.366051e-004, 2.923294e-003, 6.189396e-003, -3.236517e-003, -2.274457e-002, -3.158339e-002, 1.728117e-002, -5.208505e-002, 1.087157e-002, 1.631248e-002, -2.713421e-002, -4.554296e-003, 2.725711e-002, -5.174577e-003, -4.056554e-003, -9.802237e-003, -2.062805e-002, -7.661048e-003, -1.076461e-002, -2.449793e-002, -1.184740e-002, -9.327130e-003, -1.241966e-002, -4.122489e-003, -1.043351e-002, -3.228889e-002, -2.848905e-002, -3.163409e-002, 3.095221e-003, -1.625624e-002, 3.394693e-002, -2.554554e-003, -2.065889e-002, 3.174684e-002, -1.108826e-002, -1.265817e-002, -2.122123e-002, -1.565953e-002, -2.531738e-002, -9.534973e-003, -2.396676e-002, -2.460844e-002, -1.338857e-002, -1.300936e-002, -1.088651e-002, -1.603511e-002, -1.096625e-002, -2.491334e-002, -2.033657e-002, -9.987698e-003, -1.778115e-003, -4.275065e-002, 2.730570e-002, -2.562827e-002, -6.129427e-002, 8.747725e-003, 1.622227e-003, -2.686010e-002, 6.358195e-002, -1.504467e-002, -1.981607e-002, -2.114903e-002, -3.085353e-002, -2.193611e-002, -1.881122e-002, -1.167555e-002, -1.984576e-002, -2.150709e-002, -2.596130e-002, -2.322866e-002, -3.586939e-002, -3.372194e-002, -1.601003e-002, -3.330246e-002, 4.008857e-002, -5.982673e-003, -2.699910e-002, -3.436244e-002, 1.430124e-003, 1.794888e-004, -3.076299e-002, -1.874076e-002, -1.361763e-002, -1.361763e-002, -1.874076e-002, -3.076299e-002, 1.794888e-004, 1.430124e-003, -5.271983e-002, 6.301026e-002, 5.459416e-002, 4.272529e-002, 1.632376e-002, 2.365272e-003, -1.613438e-002, -5.548915e-002, -6.757505e-002, -


© ISO/IEC 2004 — All rights reserved

Copyright International Organization for Standardization
Provided by IHS under license with ISO
No reproduction or networking permitted without license from IHS
Not for Resale

1.118396e-001, -7.849299e-002, -9.262737e-002, 3.217067e-002, -3.814830e-002, 1.059771e-003, 2.237517e-002, 4.865225e-002, 2.153484e-002, 3.172754e-002, 9.350018e-003, 3.195742e-002, -5.612073e-002, 6.160048e-002, 1.355660e-001, -4.336561e-002, -2.869038e-002, 7.054086e-003, 1.748190e-002, 2.848852e-003, -2.934289e-003, 2.986752e-002, 2.534067e-002, 8.219510e-002, -2.925797e-002, 5.906311e-003, 2.759265e-003, 1.022128e-002, -1.540054e-003, -3.065315e-003, -6.144862e-003, -5.469597e-003, 8.966896e-003, 1.727945e-002, 1.128996e-002, -2.272539e-002, -2.912748e-003, -2.148332e-002, -6.713751e-003, -5.758350e-003, 4.919499e-004, -2.910198e-003, -1.770089e-003, 4.388146e-003, 5.573073e-003, 2.067247e-002, -4.204948e-002, -6.465348e-003, -1.264367e-002, -1.019475e-003, -2.958697e-003, -1.603752e-002, -3.429151e-003, 1.571931e-003, -6.120605e-004, 1.342066e-002, 5.632001e-003, 5.132797e-003, -9.749070e-003, -4.845177e-003, -2.172580e-002, -1.299184e-002, 5.611535e-003, 5.611535e-003, -1.299184e-002, -2.172580e-002, -4.845177e-003, -9.749070e-003, -5.743856e-002, -6.321227e-002, -1.010533e-001, -4.016974e-002, -3.224517e-002, 3.758949e-003, 2.484885e-004, 8.894436e-002, 1.095454e-001, 3.445174e-002, 4.573901e-002, -1.561865e-001, -9.332380e-002, -4.351278e-002, 2.467391e-002, 1.045684e-002, 2.439464e-003, 1.601534e-002, 3.026182e-003, 4.308405e-003, -5.946037e-003, 2.401912e-002, -4.851990e-002, 3.353297e-002, 2.901235e-002, 2.537616e-002, 1.172925e-002, 5.632037e-003, 1.321343e-002, -5.327027e-003, -4.287360e-002, 3.137049e-002, 1.127434e-001, 2.621656e-002, 5.824856e-002, 2.517688e-002, 1.280247e-002, 5.905808e-003, -3.082075e-003, -4.912375e-003, -1.445685e-002, -1.446798e-002, 1.615947e-002, 9.978979e-002, 9.424865e-003, 4.756218e-002, 1.349195e-002, -4.585643e-003, -3.057873e-003, -2.763265e-003, -6.977013e-003, -1.252013e-002, -1.212125e-002, 5.921930e-003, 3.534346e-002, -3.095548e-002, 1.999655e-002, 1.789063e-002, -4.335724e-003, -1.736943e-003, -6.397306e-005, -9.068691e-003, -1.615873e-003, -5.616342e-003, 5.057816e-003, 3.266785e-003, 2.890827e-002, -1.310224e-003, -1.281570e-002, 2.813275e-003, -1.586825e-002, 4.745857e-003, 4.745857e-003, -1.586825e-002, 2.813275e-003, -1.281570e-002, -1.310224e-003, 1.750472e-002, 1.755985e-002, -6.302716e-002, 1.071408e-003, 4.222389e-002, 3.566569e-003, -4.929321e-002, -6.405101e-002, -3.761408e-002, -1.149143e-001, 4.628080e-002, 3.925813e-002, 3.461192e-002, 6.610837e-002, 8.031703e-002, 5.773601e-002, 4.229837e-002, -1.425731e-003, -1.838389e-002, 1.615536e-002, 8.516056e-002, 6.048233e-002, -1.897210e-002, -4.051510e-002, -2.011800e-002, 4.233118e-002, 3.736288e-002, 2.964900e-002, -8.635504e-004, -1.042623e-002, 9.353242e-003, 4.376152e-002, -1.103097e-002, -1.536172e-002, 3.930925e-002, -4.867874e-002, 4.993019e-003, 2.375831e-002, 2.801307e-002, -4.124536e-003, -6.968661e-003, 1.037975e-003, 3.169688e-002, 3.690143e-002, 2.454826e-004, -1.886797e-002, -5.901548e-002, -3.127052e-002, 5.460757e-003, 6.457393e-003, -6.850287e-003, -8.015275e-004, -8.644001e-003, 5.123590e-003, 4.167936e-002, 4.505405e-003, 2.517925e-002, -2.647803e-002, -2.932295e-002, -1.839251e-002, -2.145274e-003, -2.253654e-003, -3.234642e-003, 2.007316e-003, 5.028723e-003, 1.386075e-003, -2.061463e-003, 3.219720e-003, 2.798167e-002, -3.959127e-003, 1.319040e-002, 3.835842e-003, 3.835842e-003, 1.319040e-002, -3.959127e-003, 2.798167e-002, 3.219720e-003, 2.152534e-002, -2.784591e-002, -3.602777e-002, -5.619637e-002, -4.857743e-002, -7.085952e-002, -1.475010e-002, 4.335121e-002, 3.902348e-002, 5.946910e-002, -6.722344e-002, 4.885762e-002, 1.037783e-001, -1.123770e-002, -1.337907e-002, -6.850758e-003, 8.302472e-003, 4.953747e-002, 8.589813e-002, 8.514092e-002, 1.954686e-002, 1.092331e-001, -5.699409e-002, -7.046336e-002, 9.655472e-002, -1.272161e-002, 2.977718e-003, -8.240194e-003, 2.446643e-002, 5.058103e-002, 2.613165e-002, -4.045821e-002, -2.787070e-002, -6.291599e-002, 2.362090e-002, 1.161378e-002, 1.053576e-002, -5.957005e-003, -2.675060e-003, 9.664063e-003, 1.073089e-002, -9.922547e-003, -5.983046e-002, -1.513994e-002, 7.502843e-003, -1.695654e-002, 1.452391e-003, -1.336068e-002, -6.824322e-003, -4.503557e-003, 2.765728e-003, -7.581065e-003, -2.837556e-002, -5.563105e-002, -4.199798e-002, -1.966078e-002, 4.940655e-003, 6.305073e-003, 2.240750e-003, -6.791782e-004, -3.188512e-003, -2.850372e-003, -1.569037e-002, -2.797787e-002, -3.037518e-002, -1.026422e-002, 3.540696e-002, 2.113208e-002, -1.504185e-002, -1.504185e-002, 2.113208e-002, -1.223870e-001, -6.600794e-002, -3.855528e-003, -1.100794e-002, -9.326709e-003, -6.189748e-002, -3.001217e-002, -2.764124e-002, -1.095073e-002, -1.772292e-002, 6.478188e-002, -3.016797e-002, -1.163596e-002, -1.163596e-002, -3.016797e-002, 8.553470e-002, 3.848250e-002, 2.204488e-002, 1.609417e-002, 3.341248e-002, -5.682906e-002, 2.360867e-002, 5.870793e-003, 3.521133e-003, 4.588404e-003, 2.407242e-003, -5.433487e-003, -2.670351e-003, -2.670351e-003, -5.433487e-003, 1.096931e-001, 3.069844e-002, 1.711669e-002, 1.725884e-002, 5.400219e-002, 1.557475e-003, 1.239099e-002, 5.082505e-003, 5.792744e-003, 2.335417e-002, -3.734986e-002, 8.632601e-003, 1.306409e-002, 1.306409e-002, 8.632601e-003, -8.644783e-002, -2.852724e-002, -1.935306e-002, 7.981359e-003, -4.837169e-002, -1.856211e-002, -4.451390e-003, -5.595688e-003, -3.621706e-002, -1.081923e-002, -5.377390e-003, -1.728524e-002, 1.724534e-002, 1.724534e-002, -1.728524e-002, 1.234364e-001, 9.245966e-002, 2.597099e-002, -5.412074e-007, 3.899249e-002, 2.325702e-002, 1.080234e-002, 7.484334e-003, -8.058586e-003, 9.758919e-003, -1.291739e-001, 8.116226e-002, 4.606877e-002, 4.606877e-002, 8.116226e-002, -2.256841e-002, 2.946506e-002, 1.574786e-002, 1.662311e-002, -1.975821e-002, 9.523574e-002, 1.838512e-002, 1.158172e-002, 9.106049e-003, 3.822956e-002, -1.693487e-002, 5.623434e-002, 2.134376e-002, 2.134376e-002, 5.623434e-002, -6.452397e-002, -

© ISO/IEC 2004 — All rights reserved


--`,,```,,,,````-`-`,,`,,`,`,,`---

Copyright International Organization for Standardization
Provided by IHS under license with ISO
No reproduction or networking permitted without license from IHS
Not for Resale

2.740977e-002, 1.380507e-002, 7.266037e-003, 1.207392e-002, 7.981629e-002, 4.343551e-002, 7.762724e-003, 5.219191e-003, 2.407242e-002, 5.701028e-002, -6.405263e-003, 4.235222e-002, 4.235222e-002, -6.405263e-003, 6.129230e-002, 6.822054e-003, -1.301628e-002, 2.395199e-002, 5.678095e-002, 3.465243e-002, 9.883832e-003, 3.075512e-003, 1.042176e-002, 9.367253e-003, 5.472079e-003, 2.694883e-002, -3.338684e-002, -3.338684e-002, 2.694883e-002, -9.518467e-002, -2.884075e-002, -3.094779e-003, -2.511650e-002, -5.309013e-002, -3.402021e-002, -2.088251e-002, -2.719596e-003, -1.401946e-002, -1.995464e-002, 5.809498e-002, -6.014513e-003, 6.756022e-003, 6.756022e-003, -6.014513e-003, 1.926842e-001, 6.946540e-002, 1.690412e-002, 1.939781e-002, 3.429725e-002, 5.085315e-002, 1.499100e-002, 1.908910e-002, 7.075221e-004, 1.642861e-002, -3.086018e-002, 1.075052e-002, -2.137822e-002, -2.137822e-002, 1.075052e-002, 1.855205e-001, 2.780864e-002, 1.583848e-002, 2.112129e-002, 5.434070e-002, 2.254263e-002, 2.631391e-003, 1.309660e-003, 1.089475e-002, 7.905855e-003, -2.154803e-002, -4.399193e-002, 2.259340e-002, 2.259340e-002, -4.399193e-002, -3.032746e-002, -2.300991e-002, 1.277645e-003, 7.875127e-003, -4.105826e-003, -2.247318e-002, -5.251130e-003, -1.322206e-002, -7.111269e-003, -1.174010e-002, -1.943297e-002, 9.586601e-003, 1.430624e-002, 1.430624e-002, 9.586601e-003, -5.781098e-002, -3.346129e-002, 2.382084e-002, -2.684096e-002, -9.253322e-002, -1.168438e-002, -6.943031e-002, 5.272286e-003, -1.286241e-002, -1.364022e-002, -1.522582e-002, -5.050659e-002, -1.215278e-002, -1.215278e-002, -5.050659e-002, 1.720024e-003, 3.371780e-002, 2.141009e-002, 1.667026e-002, 9.884415e-002, -6.736861e-003, 5.267010e-003, 5.823502e-003, 7.224774e-003, 1.701678e-002, 5.618904e-002, -8.576376e-002, -3.738805e-002, -3.738805e-002, -8.576376e-002, 4.584357e-002, 6.746252e-002, 2.004969e-002, 2.297316e-002, 3.015343e-002, -2.612922e-002, 1.779364e-002, 5.481017e-003, 3.771132e-003, 2.778594e-003, -5.842304e-003, -9.332394e-003, -1.513351e-002, -1.513351e-002, -9.332394e-003, -4.320137e-002, -4.441387e-002, -2.876751e-002, 3.629119e-002, -1.791811e-002, -2.470735e-002, -1.382624e-002, -9.633115e-003, -2.847215e-004, -7.090438e-002},
{-3.613795e-003, -1.137403e-003, 2.073347e-003, 1.361328e-003, -5.301876e-003, 9.396297e-003, -1.476842e-002, -1.289211e-003, 1.032380e-002, -1.194209e-002, 1.770112e-003, 3.976541e-002, 1.770112e-003, -1.194209e-002, 1.032380e-002, -1.289211e-003, -1.476842e-002, 9.396297e-003, -5.301876e-003, 1.361328e-003, 2.073347e-003, -1.137403e-003, -3.733719e-003, 5.226372e-003, -2.577482e-003, 8.576184e-003, 1.705919e-003, 3.598791e-003, 1.010595e-002, -5.657383e-003, 5.634510e-002, 3.788393e-002, 1.045825e-002, -1.043353e-002, 5.550733e-002, -3.082861e-002, 3.251535e-002, 1.701771e-002, -2.327747e-002, -1.234442e-002, 2.422658e-003, 1.203579e-002, -2.183148e-003, -9.815914e-005, 1.612992e-002, 5.601304e-003, 1.445180e-002, -5.415458e-003, -7.058886e-003, 3.324065e-002, -1.423160e-002, -1.996761e-002, 2.768508e-002, 1.113599e-002, 3.664206e-002, -2.365166e-002, -4.967222e-002, 2.502791e-002, 3.707091e-003, 2.277858e-002, 4.897376e-003, -1.744157e-003, 1.448265e-002, 7.507776e-003, 2.811383e-003, -1.086651e-002, 2.116106e-002, 2.394883e-002, -5.584990e-003, -3.227691e-002, -2.534329e-002, 1.748035e-002, -3.208718e-002, 1.302397e-002, -2.208842e-002, 1.729108e-002, 1.779040e-002, 2.083974e-002, -2.049586e-002, -3.564739e-002, -2.271880e-002, -4.682813e-002, -1.988156e-002, -1.544638e-002, -2.998099e-003, 1.248082e-003, 7.299055e-003, -4.072059e-002, -8.158037e-003, 7.913424e-003, -6.783471e-003, -2.329771e-002, -1.326447e-002, 5.286561e-002, -2.700644e-002, 1.646696e-002, 2.643739e-002, -2.486996e-002, -6.322922e-004, 1.320442e-002, 4.363275e-002, -1.550011e-002, 5.202755e-002, -1.670064e-002, -2.220722e-002, -1.974029e-002, 1.412638e-003, -1.818938e-002, 2.583354e-002, -1.833679e-002, -1.212408e-002, 7.385241e-003, 1.941054e-002, -5.753779e-003, -2.406004e-002, -5.307097e-003, -2.527492e-002, 6.352880e-003, 3.224145e-002, 3.647628e-002, -2.680407e-002, 1.292191e-002, 5.447583e-002, 1.941882e-002, 5.097255e-002, 1.538905e-002, -2.476390e-003, -5.167058e-003, -4.609282e-002, -2.160356e-002, 2.267577e-002, 7.008301e-002, 2.876227e-003, 2.480477e-003, 3.918771e-003, 4.282261e-002, -1.636173e-002, -5.198873e-002, 1.540616e-003, -1.939116e-002, 4.495495e-002, -1.192733e-002, -1.056175e-002, 7.728069e-003, 5.041874e-002, 2.497769e-002, -6.586741e-002, 2.913924e-002, 8.443575e-003, 4.596992e-002, 7.414503e-003, 2.800931e-002, 1.975262e-002, 1.386620e-002, 3.894429e-002, -2.551997e-002, 1.840373e-002, -4.658369e-002, 4.226357e-002, 2.370583e-002, -8.588409e-003, -6.774736e-002, 9.745698e-004, -1.531240e-002, 3.318966e-003, -6.322160e-003, -2.065307e-002, 2.672007e-002, 2.077126e-002, -7.449376e-004, -5.237217e-003, 4.283057e-002, 3.472262e-002, -1.001437e-002, -3.070198e-002, 5.844411e-003, 4.918107e-003, -2.195777e-002, 9.748942e-003, 3.145274e-002, -1.496629e-003, 1.142150e-001, 6.899645e-002, 1.232585e-002, 2.012702e-002, 3.464802e-003, -7.346304e-003, 6.471432e-003, -1.683298e-003, 1.474607e-002, 4.444801e-003, -2.239164e-002, 8.567806e-002, -3.204673e-002, 1.355123e-002, 1.798887e-002, -2.129348e-002, -7.044171e-003, -1.704102e-002, -2.872113e-002, 2.089400e-002, 3.473940e-002, 1.317226e-002, 7.599307e-003, 7.262223e-002, 2.337600e-002, 1.628596e-002, 1.158679e-002, -1.904042e-002, -6.780275e-003, -4.315005e-003, 7.225133e-003, 2.122685e-002, 3.195880e-002, 1.890650e-002, -6.129792e-002, 1.745592e-002, 2.679369e-002, -1.712687e-002, 1.457023e-002, -2.237172e-003, -2.909251e-002, -8.554397e-003, -1.555091e-002, 3.990577e-002, 2.439817e-003, -6.624598e-003, 2.383849e-002, 4.486144e-002, 5.342342e-002, 1.626195e-002, 1.658567e-002, 1.167594e-002, 7.703247e-003, 1.944261e-002, 2.837651e-002, 3.019277e-002, 4.576198e-002, 2.995578e-002, 3.318993e-002,


© ISO/IEC 2004 — All rights reserved

Copyright International Organization for Standardization
Provided by IHS under license with ISO
No reproduction or networking permitted without license from IHS
Not for Resale

1.384447e-002, -4.030018e-002, -1.402782e-002, -4.524989e-002, -5.163821e-002, -4.789126e-003, -1.335254e-002, 2.990966e-002, 6.597360e-002, 4.527693e-002, 2.264113e-002, 2.355882e-002, 1.287411e-002, 3.230976e-003, 8.885641e-003, 1.861015e-003, 1.750555e-002, 5.646720e-003, 3.996112e-002, 4.455199e-003, 1.919853e-002, 6.547124e-002, 2.457477e-002, -3.498507e-003, -7.616053e-003, 1.665725e-002, 1.998198e-002, 4.444974e-002, -3.207183e-003, 7.625146e-003, -4.877541e-003, 2.024597e-002, 2.141857e-002, 1.705251e-002, 1.033593e-002, -3.440164e-003, 2.122151e-003, -2.071951e-003, 2.782349e-004, 8.639949e-003, -5.469939e-003, -1.446150e-003, 2.424220e-002, 2.092735e-002, -2.005758e-005, -2.057009e-002, -2.279959e-002, -3.241744e-003, -8.512133e-003, 7.471464e-003, -1.215429e-002, -1.761983e-002, 8.327174e-003, 1.948268e-002, 2.995412e-002, 1.509611e-002, 2.111148e-002, -5.712519e-003, 7.629045e-003, -5.524755e-003, -1.785485e-003, -1.395515e-002, -2.041480e-002, -4.753887e-003, 5.863457e-003, 5.806184e-003, -6.538897e-002, 5.481113e-002, -3.274681e-003, 1.531023e-002, 2.463129e-002, 4.074603e-002, 1.458503e-002, 2.964431e-002, 2.964431e-002, 1.458503e-002, 4.074603e-002, 2.463129e-002, 1.531023e-002, 4.691037e-002, -5.553671e-002, -1.948612e-003, -3.318632e-002, -1.021975e-002, -3.750866e-003, -2.918550e-002, -4.391530e-002, -6.835763e-002, 7.844213e-002, 5.979121e-002, -6.247719e-002, 1.161086e-001, 2.901070e-002, 2.005162e-002, 4.941702e-002, 2.507939e-002, 5.061158e-003, 1.069587e-002, -2.451695e-002, 3.709656e-003, 6.177891e-002, -4.460757e-002, 1.118378e-001, 1.294651e-001, 2.124434e-002, 1.590799e-002, -5.872116e-003, 1.357415e-002, 6.546499e-003, 1.118667e-002, 2.322427e-002, 1.755184e-002, -1.448817e-003, 3.143599e-002, 1.368374e-001, 8.204882e-002, 1.645556e-002, 4.285048e-003, 8.727478e-003, 2.804943e-003, -3.650997e-004, 9.724756e-003, 4.082070e-002, 3.772692e-002, -6.579350e-003, 4.158192e-002, 3.954131e-002, 3.745077e-002, 2.001031e-002, 5.086071e-003, 4.205516e-003, 3.257205e-004, 2.392375e-002, 6.304401e-003, 1.350082e-002, 4.897518e-002, 3.228386e-002, 2.955792e-002, 3.739267e-002, 1.870402e-002, -1.963387e-003, -1.458058e-003, -2.170284e-003, 8.462901e-003, -6.295790e-003, 2.866841e-003, 2.781752e-002, 3.374005e-002, 2.725678e-002, 2.340051e-002, -3.197499e-003, -3.197499e-003, 2.340051e-002, 2.725678e-002, 3.374005e-002, 2.781752e-002, 9.254981e-002, -3.912128e-003, 5.308063e-002, -2.808642e-002, -5.879189e-004, 4.803524e-003, 1.923098e-002, -2.838747e-002, -1.045120e-001, 6.961377e-003, -4.978777e-002, -9.852293e-002, -1.703222e-002, 1.054075e-002, -4.198792e-002, -2.100928e-002, -1.356395e-002, -2.430813e-002, 3.093555e-002, 6.319926e-002, 1.283036e-001, 6.792835e-002, 2.741980e-002, 7.775739e-003, -7.699976e-003, -5.320650e-003, 4.515182e-003, -8.625007e-003, 8.864994e-003, -1.791346e-002, 4.009278e-002, 1.455244e-001, 7.705385e-002, -8.317884e-003, -3.436647e-003, 1.501508e-002, -1.286055e-002, 9.328333e-003, 1.969593e-003, 1.636668e-002, 2.594591e-002, 3.688608e-002, 8.283485e-002, 2.417980e-002, 2.476532e-002, -7.059528e-003, 7.591097e-003, -9.410863e-003, -2.440325e-003, 3.405508e-003, 8.771331e-003, 2.633887e-002, 3.940698e-002, 3.868355e-002, 3.209861e-002, 4.167248e-002, 1.936738e-002, -1.154789e-003, -1.113803e-002, -2.625069e-003, 2.490020e-005, 1.191902e-002, 2.512351e-002, 1.498242e-002, 3.047638e-002, 2.975561e-002, -1.858214e-003, -1.230308e-002, -1.791974e-002, -2.118547e-002, -2.138198e-002, -4.422536e-002, -4.422536e-002, -2.138198e-002, -2.118547e-002, -1.791974e-002, -1.230308e-002, -2.457176e-002, -4.557370e-002, -1.068027e-001, 1.114414e-002, 1.802900e-002, -1.226765e-002, -6.488651e-003, -1.614448e-002, 4.040122e-002, 1.630486e-002, 1.804059e-002, 7.487054e-002, 4.109266e-002, 7.545351e-002, 3.634158e-002, 1.286487e-002, 1.023430e-002, 1.739464e-002, 3.553367e-002, -3.872366e-003, -5.911667e-002, -1.998440e-002, 1.214207e-002, -6.706853e-002, -4.496699e-002, -7.666428e-004, 3.140861e-003, 7.340611e-003, -1.349779e-003, -1.911070e-002, -3.148977e-002, -6.965169e-002, -2.640292e-003, -5.797768e-002, -6.700324e-003, -7.225259e-002, 1.105612e-003, 3.126144e-003, 4.872644e-005, -3.167250e-003, 1.179871e-002, 8.061615e-003, -9.650035e-003, 2.851700e-002, 3.405051e-002, -1.194652e-002, -4.645022e-002, -2.163296e-002, 7.646824e-003, 6.032085e-003, 4.746848e-003, 5.107372e-004, 8.293762e-003, 5.506121e-003, 2.980463e-002, -3.054998e-003, 1.462556e-002, -2.753789e-002, -2.250133e-002, -9.292324e-003, -1.068539e-003, -3.872737e-003, -1.581043e-003, 3.290325e-003, -1.514337e-003, 1.903991e-002, -1.347741e-003, -1.298062e-002, -1.570830e-002, 3.594244e-003, -6.903493e-003, -2.170911e-002, -2.170911e-002, -6.903493e-003, 3.594244e-003, -1.570830e-002, -1.298062e-002, -4.016465e-002, 1.289902e-002, 1.801215e-002, -3.196938e-002, -3.442125e-002, -2.248735e-002, -1.792087e-002, 4.898977e-002, -6.954056e-003, -2.304648e-002, -5.448320e-002, 4.137302e-002, 1.795195e-002, 7.445052e-003, -3.064771e-002, -1.517790e-002, -2.170648e-002, 2.726634e-002, 1.302923e-002, -4.655706e-003, 3.454983e-003, 2.192018e-002, 7.018369e-004, 4.997115e-002, -1.088159e-002, 7.329236e-003, 6.412501e-003, -1.547062e-002, 1.742050e-003, -7.258565e-003, -1.336773e-002, -1.720517e-002, 2.851161e-003, -1.327980e-002, 3.101581e-002, -5.766020e-003, 3.149972e-002, 6.234887e-003, -8.084662e-003, -7.692311e-003, -1.569151e-003, -9.633380e-003, -5.387254e-002, -9.236531e-003, 3.371482e-002, 1.397729e-003, 7.214653e-003, 5.266090e-003, 5.734051e-003, 7.037245e-003, -8.218314e-005, 7.093974e-004, -1.589444e-002, -3.286745e-002, -7.530796e-003, -6.890380e-003, 3.379523e-002, 8.502253e-003, 1.210665e-002, 3.947102e-003, 5.648055e-003, -6.787852e-003, -1.277427e-002, -2.396414e-002, -1.374966e-002, 4.125386e-003, -1.720655e-002, -2.753034e-002, -8.840719e-002, -8.840719e-002, -2.753034e-002, 4.014383e-002, 9.366569e-002, 2.085255e-002,

© ISO/IEC 2004 — All rights reserved


Copyright International Organization for Standardization
Provided by IHS under license with ISO
No reproduction or networking permitted without license from IHS
Not for Resale

6.310488e-003, 4.260012e-002, 1.452330e-002, 4.991894e-002, -5.038916e-005, -4.289323e-003, 9.693280e-003, -3.116398e-002, 3.051241e-002, 3.548358e-003, 3.548358e-003, 3.051241e-002, -6.128791e-002, 3.836545e-002, 1.238991e-002, 5.485824e-004, 1.068543e-002, -2.866529e-003, 5.758203e-002, 1.570068e-002, 4.052326e-003, 6.101948e-003, 7.417740e-002, -5.845691e-002, -1.883639e-002, -1.883639e-002, -5.845691e-002, 2.373727e-002, -1.179666e-002, -1.163148e-002, -7.655744e-003, -2.025289e-002, 1.294940e-002, -7.374573e-005, 3.995966e-003, 7.712966e-003, 1.859517e-002, -5.098051e-002, -2.658285e-002, -6.906050e-002, -6.906050e-002, -2.658285e-002, 1.845249e-002, 5.746384e-002, 1.180581e-002, 4.147996e-002, 1.726282e-001, 2.924522e-003, 1.915329e-002, 3.218812e-003, 2.176994e-002, 5.426478e-002, 1.492793e-002, -4.667671e-002, 8.109082e-003, 8.109082e-003, -4.667671e-002, 1.422887e-002, -2.047161e-002, 1.175288e-003, -1.052177e-003, 4.940884e-003, 6.797769e-003, 8.152567e-003, 2.201136e-003, -1.338193e-003, 2.461992e-003, 3.016793e-002, -1.219867e-001, -4.159638e-002, -4.159638e-002, -1.219867e-001, -2.101349e-001, -1.247466e-002, 3.828066e-003, -4.926818e-003, -2.620744e-002, 5.431891e-002, 1.049036e-003, 2.235197e-003, 8.621728e-003, 3.129860e-002, -1.960139e-002, -1.508280e-001, -4.516007e-002, -4.516007e-002, -1.508280e-001, -1.247477e-001, -4.332680e-002, -1.199398e-002, -1.508669e-002, -3.011043e-002, 5.027128e-002, 1.424691e-002, -2.373514e-003, 9.426547e-003, -5.518489e-003, -7.286549e-004, -7.600545e-002, -2.804286e-002, -2.804286e-002, -7.600545e-002, 3.902362e-003, -4.072805e-002, -3.171489e-003, -2.355590e-002, -6.043288e-002, 6.918600e-003, -1.546389e-002, -5.394811e-003, -1.313037e-003, -1.218827e-002, 1.640309e-002, 3.871718e-002, -3.668092e-002, -3.668092e-002, 3.871718e-002, -1.237770e-001, -2.163300e-002, -8.723248e-003, 1.333984e-003, -8.126754e-002, -4.102817e-002, -1.291116e-002, -5.889817e-003, -8.895729e-003, -1.324885e-002, -6.670389e-002, 8.415288e-003, -1.893375e-003, -1.893375e-003, 8.415288e-003, 1.101559e-001, 4.536563e-002, 9.050183e-003, 3.930551e-003, -2.157801e-003, -2.356114e-002, -1.235669e-002, 8.570640e-003, -5.456560e-003, -1.693354e-002, -5.096521e-002, 4.179092e-003, 9.368348e-003, 9.368348e-003, 4.179092e-003, 1.208200e-001, 1.151838e-002, 1.199437e-003, 1.012493e-002, 3.457601e-002, -7.188936e-003, -1.989761e-002, -4.795518e-003, 1.212364e-002, -5.283538e-003, -3.052333e-003, 9.151010e-002, -1.249012e-002, -1.249012e-002, 9.151010e-002, -1.106490e-001, -7.560039e-002, -2.137137e-002, -1.596751e-003, -2.571712e-002, -4.341042e-002, -1.423523e-002, -1.564762e-002, -5.122596e-003, -2.092274e-002, -1.111569e-002, -4.496575e-003, 1.352356e-002, 1.352356e-002, -4.496575e-003, -1.535376e-002, -5.452107e-002, 5.220283e-003, 1.431984e-002, -2.633113e-002, -3.297386e-002, -5.557576e-002, -9.180066e-003, 1.338074e-004, -3.735621e-003, 5.955828e-002, -5.552213e-002, -1.730427e-002, -1.730427e-002, -5.552213e-002, 1.147665e-002, 5.452647e-003, 7.138453e-003, 1.094829e-002, 1.287426e-002, -1.672854e-003, 1.512649e-003, 5.663580e-003, 6.934889e-003, -1.204155e-003, 4.386899e-002, -2.211500e-002, -1.388855e-002, -1.388855e-002, -2.211500e-002, -2.528464e-002, 1.334281e-002, 2.458863e-003, 3.450468e-003, -7.333602e-003, -3.057270e-003, 1.855672e-003, 6.498057e-003, 3.809676e-003, -1.564399e-005, 8.800812e-003, 4.178820e-003, -1.410910e-002, -1.410910e-002, 4.178820e-003, 1.338552e-004, 2.634503e-002, 1.349891e-003, 6.243089e-003, -4.622203e-002, 7.114230e-004, 8.558394e-003, 7.899780e-003, -1.480275e-002, -3.752379e-002},
{3.914492e-003, 6.468358e-003, -1.723049e-002, -6.431468e-003, -9.062903e-003, -5.273126e-003, -1.396379e-002, 5.070371e-003, -1.640393e-002, -1.542858e-002, 6.225700e-003, 2.195165e-002, 6.225700e-003, -1.542858e-002, -1.640393e-002, 5.070371e-003, -1.396379e-002, -5.273126e-003, -9.062903e-003, -6.431468e-003, -1.723049e-002, 6.468358e-003, -1.073831e-002, 1.422683e-002, -3.833573e-003, -7.795796e-003, -4.900487e-003, -2.343388e-002, -3.263261e-002, -1.408814e-002, -2.442375e-002, 5.190214e-003, -8.763207e-003, -2.610975e-003, 2.233452e-002, -3.704351e-002, -1.123525e-002, 1.276455e-002, 7.682387e-003, -1.615142e-002, -2.647670e-002, 1.411445e-002, -1.741410e-002, -5.131026e-003, -9.355042e-003, 2.412949e-002, 2.377447e-002, 1.407047e-002, 6.563633e-003, -1.683668e-002, -1.966262e-003, 1.113054e-002, -1.782731e-002, 1.840771e-002, -1.239437e-002, -8.267078e-002, 4.164227e-002, 3.921597e-002, -4.970965e-002, -1.097249e-002, -1.509714e-002, -2.005579e-002, 5.582122e-003, 2.432041e-002, 2.552933e-002, -2.831779e-002, -1.025397e-002, 5.622829e-002, -4.878811e-002, -4.639724e-002, 8.625273e-003, -3.918061e-002, -2.395889e-002, 2.605909e-003, 9.305813e-003, 2.793020e-002, -1.571295e-002, -2.322398e-002, 3.448195e-002, -2.305477e-002, 9.178594e-003, 2.134693e-002, -9.326119e-003, 2.147413e-002, -3.387830e-002, 6.262857e-003, -3.363928e-002, 4.824854e-003, 3.655020e-002, 3.150951e-002, 1.467244e-002, -2.710703e-002, -4.250477e-002, 2.020762e-002, 1.489078e-002, 2.978683e-002, 1.772928e-002, 3.858845e-002, -4.432156e-002, -1.278730e-002, -1.143754e-002, 1.596104e-002, -4.634282e-003, -1.070529e-002, -5.190801e-003, -2.492195e-002, 5.534503e-003, 3.496111e-002, 6.927613e-003, -3.096101e-002, 1.618816e-003, -1.777278e-002, -2.162792e-002, 3.376699e-002, 3.283652e-002, -1.659647e-002, -2.668488e-002, -5.100024e-003, 6.493245e-003, -2.049531e-002, -6.666293e-002, 6.423117e-004, -1.742644e-002, -2.864273e-002, -6.773464e-003, 2.483606e-002, 5.607273e-004, -3.429812e-002, -1.209879e-002, -1.043141e-002, -9.838836e-003, 1.016414e-002, -1.710034e-002, 6.275885e-002, -1.451727e-002, 6.544545e-003, -1.108299e-002, -5.223698e-002, -4.822873e-002, 1.483052e-002, 8.829999e-003, -2.102763e-002, -1.205491e-002, -1.021667e-002, -3.542168e-002, -2.172798e-002, -8.115273e-003, -1.017997e-002, 1.795352e-003, 1.320312e-002, 7.801836e-003, 5.163731e-002,


© ISO/IEC 2004 — All rights reserved

Copyright International Organization for Standardization
Provided by IHS under license with ISO
No reproduction or networking permitted without license from IHS
Not for Resale

1.068713e-002, -3.167804e-003, 1.393389e-002, -3.318304e-002, -9.817750e-004, 2.000376e-002, 4.495592e-002, 2.904950e-002, 1.567815e-002, 1.123898e-003, -2.957587e-002, -3.479611e-002, -3.307622e-002, -6.533067e-003, 2.429162e-002, -1.258604e-002, -1.866953e-002, -5.219068e-003, 2.138631e-002, 4.426613e-002, 4.498572e-003, 1.393327e-002, -2.592618e-002, -1.702407e-002, 2.025069e-002, 7.848914e-003, -4.983778e-004, -4.229787e-002, 4.649392e-002, -1.312388e-002, 2.848455e-002, 2.183994e-002, 5.374853e-003, -4.046727e-002, -3.077771e-002, -7.402244e-003, 1.161130e-003, 2.715731e-003, 1.600108e-002, -4.875797e-002, -8.363311e-003, 5.137091e-003, 1.657819e-002, -4.185136e-002, 9.548517e-003, -1.904899e-002, -1.981496e-002, -1.358385e-002, -3.341775e-002, -4.070299e-002, -4.806676e-002, 2.573337e-002, -3.205866e-002, 1.943270e-002, 1.533141e-002, 1.745374e-002, -7.884422e-003, -1.220439e-002, -1.919496e-002, -1.118692e-002, -2.527506e-002, -4.047315e-002, -6.452284e-002, 3.640395e-002, 3.941283e-003, -3.718831e-002, -4.278510e-002, -6.523522e-003, -6.177378e-003, 2.823401e-002, 3.622793e-003, -5.393083e-002, 1.890294e-002, 7.449210e-002, 2.610464e-002, 2.907063e-002, 2.893142e-002, 1.386953e-002, -3.652909e-003, 1.330504e-002, -1.242378e-002, -1.132827e-002, -1.878727e-002, -3.059005e-002, -1.932719e-002, -4.394848e-002, -6.400289e-004, 3.029434e-003, 4.660889e-002, 3.332482e-002, -2.220557e-002, 5.826079e-003, 1.553474e-002, -1.582134e-002, -2.868923e-002, 5.781398e-003, 2.622659e-002, 3.856598e-002, 1.162887e-002, 6.398557e-003, -1.182059e-002, 2.253649e-003, -4.061914e-003, 4.347704e-003, -1.041391e-002, -1.696020e-003, -1.558676e-002, -2.012865e-002, 4.484357e-003, -2.381298e-004, -2.963078e-002, 1.298574e-002, 7.410130e-003, 2.979501e-002, 1.233132e-002, -3.306969e-002, 4.676242e-003, 3.317738e-002, -1.915023e-002, 2.569940e-003, 1.280693e-002, -3.888053e-003, -5.268200e-003, -2.281036e-003, -1.306546e-002, 7.339871e-004, 1.774574e-003, -7.238024e-003, -2.667144e-002, -1.648433e-003, -2.601382e-003, -6.428227e-002, -1.811560e-002, 1.161725e-002, 1.382748e-002, 4.880311e-002, 2.643042e-003, -2.229341e-004, 1.120835e-002, -3.759877e-003, 6.440678e-003, -7.721765e-003, 1.003635e-002, 5.254850e-003, 9.070562e-003, 3.182964e-003, -1.358063e-002, -9.373453e-003, -1.768520e-002, -2.322977e-002, -9.463969e-003, -8.813519e-003, -2.922622e-002, 4.702851e-002, -1.076760e-002, 5.080369e-002, 2.015329e-003, 1.643933e-002, -5.404076e-003, 2.228233e-002, -1.188703e-002, 1.341559e-002, 1.341559e-002, -1.188703e-002, 2.228233e-002, -5.404076e-003, 1.643933e-002, 3.265567e-002, -1.002545e-001, -7.374675e-003, -3.049862e-002, -1.176804e-002, -6.708431e-003, 6.127640e-002, 7.290374e-002, 5.338682e-002, 3.938658e-002, 6.455412e-002, -1.014356e-001, 2.878386e-002, 2.793053e-002, -5.711214e-002, -8.251836e-002, -6.790578e-002, 3.504153e-002, 4.445842e-002, 5.257931e-002, 2.968122e-003, -3.321915e-002, 7.718359e-002, -3.602223e-002, 9.000032e-002, 9.354524e-003, 1.127528e-002, -2.788877e-002, 1.213439e-002, 1.761865e-002, 9.603087e-003, -4.327910e-002, 5.619992e-002, -6.622442e-002, -3.442236e-002, 3.710604e-002, 4.049671e-002, 8.324220e-003, -1.179676e-002, 9.507756e-004, 1.872772e-003, -1.266837e-006, 4.340337e-003, -7.401023e-002, -6.708712e-002, -2.415062e-002, 1.666482e-002, 3.074415e-002, 1.866075e-002, 1.651337e-002, 1.785612e-004, 6.259656e-003, -4.371276e-003, -1.131795e-002, -3.065421e-002, 2.131939e-002, 1.953599e-003, -2.737960e-002, 1.225967e-002, 9.305266e-003, 9.358869e-003, 1.094604e-003, 6.558213e-003, -3.428658e-003, 2.844934e-003, 2.285285e-002, -4.548424e-003, 1.507142e-002, -1.519386e-002, -2.120201e-002, 4.344324e-003, -3.929840e-002, -3.929840e-002, 4.344324e-003, -2.120201e-002, -1.519386e-002, 1.507142e-002, -1.933920e-002, 7.612207e-002, 9.693188e-002, 8.942059e-002, 6.357420e-002, 1.485947e-002, -3.006791e-002, -2.993763e-002, -1.501623e-002, -2.782894e-002, -5.209036e-002, -9.268615e-002, -3.860139e-002, 4.834846e-002, 6.230816e-002, 4.522023e-002, 2.671241e-002, -7.525769e-003, -9.399144e-003, 2.876543e-002, -2.038667e-002, -6.999657e-002, 1.378194e-001, 2.113473e-002, -2.413618e-002, 1.135857e-002, 1.065273e-002, 1.867815e-002, -7.029639e-003, 1.489225e-002, 2.663583e-002, -8.231807e-002, 4.378208e-002, 2.334531e-002, -6.897669e-002, 3.794560e-003, -2.995354e-003, 3.004956e-003, 2.190031e-003, 1.184388e-002, 6.939333e-004, 2.179856e-002, 1.154307e-003, 7.785088e-003, -5.737331e-002, -3.043203e-002, 4.761815e-003, 3.964580e-003, 1.301364e-002, 3.536442e-003, 4.848082e-003, -1.090139e-003, -1.279781e-002, -1.188969e-002, -3.409758e-002, 4.741699e-002, 2.711408e-002, -1.652253e-002, -5.257540e-004, 7.873374e-003, -5.356768e-004, 3.599407e-003, -3.483896e-003, -1.422092e-002, -2.382947e-002, -6.449820e-003, -1.508212e-003, -4.185268e-003, 6.516435e-003, -1.980899e-002, 2.695540e-002, 1.230223e-002, 1.230223e-002, 2.695540e-002, -1.980899e-002, 6.516435e-003, -4.185268e-003, -4.237138e-003, 6.449173e-002, 3.638808e-002, 4.583767e-002, 2.909525e-002, 2.584893e-002, 1.953674e-002, 5.973085e-002, 4.975127e-003, -3.391441e-002, -2.873642e-002, 5.647238e-002, -6.153463e-002, -4.386482e-002, -1.924838e-002, 1.224436e-002, 1.553868e-002, 1.682929e-002, 1.228112e-002, -5.524277e-002, 7.335627e-002, -1.977687e-002, 1.794349e-003, -5.672401e-002, -9.699660e-002, -3.905247e-002, -5.679521e-003, 8.241922e-003, -7.525578e-003, 7.363701e-003, 6.033196e-002, 9.853350e-002, 2.294374e-002, 1.653311e-002, -1.023076e-002, -6.134365e-002, -3.932846e-002, -2.233249e-002, -1.654951e-002, 5.700104e-003, 1.561809e-002, 1.632634e-002, 2.642161e-002, 3.896929e-003, -4.769846e-003, 1.622493e-002, -4.267121e-002, -2.642540e-002, -2.170964e-002, -2.087133e-002, 1.700632e-003, 6.604169e-003, 5.592677e-003, -8.677207e-003, 2.675698e-002, 1.696271e-002, -7.886886e-003, -1.261560e-003, -2.551700e-002, -2.181190e-002, -1.905737e-002, -6.615830e-003, 7.816559e-003, -

© ISO/IEC 2004 — All rights reserved


Copyright International Organization for Standardization
Provided by IHS under license with ISO
No reproduction or networking permitted without license from IHS
Not for Resale

6.230568e-004, 7.329529e-003, 1.195756e-003, 7.955799e-003, -1.001515e-002, -6.547214e-003, -1.115258e-002, 3.671241e-004, 2.218840e-002, 2.218840e-002, 3.671241e-004, -1.115258e-002, -6.547214e-003, -1.001515e-002, 3.720568e-003, -3.945412e-002, -4.731599e-002, 1.722885e-002, 3.008200e-002, 2.265565e-002, 2.665784e-002, 4.270178e-002, -3.949554e-002, -2.165268e-002, 1.845911e-002, 8.707338e-002, 6.302849e-002, -8.263578e-002, 3.246933e-002, 7.639711e-003, 1.166629e-002, 1.522347e-002, 1.543439e-002, -6.301093e-002, -1.010594e-001, 6.112377e-002, -6.666459e-003, -1.236635e-002, -6.032772e-003, 1.261026e-002, -1.237974e-002, -5.520181e-004, -1.188755e-002, -3.112587e-002, -5.522063e-002, -8.176814e-002, -3.734590e-002, 3.880818e-003, 2.199838e-003, -8.424184e-003, 2.185172e-002, 4.310843e-003, -1.245780e-002, -1.598147e-002, -5.298377e-002, -7.765994e-002, -7.040439e-002, -8.752130e-003, -1.801872e-002, -1.246274e-002, -3.683665e-003, 8.209018e-003, 1.009699e-002, 4.752438e-003, -2.712199e-002, -4.493678e-002, -4.987159e-002, -1.728434e-002, 1.622448e-002, -5.540320e-004, 1.507572e-002, 1.176187e-002, 1.752409e-002, 3.301286e-003, -2.699747e-003, -2.093977e-002, -2.340771e-002, -2.980257e-002, -4.025507e-003, -1.174782e-002, 4.020677e-002, -2.762355e-002, 1.770553e-002, 1.770553e-002, -2.762355e-002, 9.052571e-002, 4.121214e-002, -2.418762e-002, -4.463833e-003, 1.450565e-002, 4.934042e-002, 2.102139e-002, 2.945290e-002, 4.745810e-003, 3.429422e-003, -4.833093e-002, -6.877802e-002, -2.150755e-002, -2.150755e-002, -6.877802e-002, -1.205169e-001, -1.268278e-003, 9.700494e-003, 2.137205e-002, 3.972673e-002, -1.168379e-001, 8.502169e-003, 5.385911e-003, 7.078847e-003, 3.154838e-003, 2.976050e-002, 4.592518e-002, -3.681060e-003, -3.681060e-003, 4.592518e-002, 2.210613e-001, 4.364310e-002, 1.088762e-002, 5.002162e-003, -1.707821e-003, 2.977685e-002, 6.780102e-003, 4.498908e-003, 2.019675e-003, 4.206537e-003, 3.617483e-002, 2.790269e-002, -2.541563e-002, -2.541563e-002, 2.790269e-002, -4.459143e-002, 2.247142e-002, 1.116154e-002, 8.492355e-003, 4.657569e-002, -5.392967e-003, 8.948933e-003, 7.550380e-003, 1.601162e-002, -8.884082e-003, -3.210999e-002, -9.259160e-003, 3.263929e-003, 3.263929e-003, -9.259160e-003, 2.620775e-001, 7.685263e-002, -2.894153e-002, 3.831694e-002, 6.865150e-002, 6.539709e-002, 8.535339e-003, -3.228940e-003, 2.720596e-003, 1.464976e-002, 4.224948e-002, 5.842187e-002, 6.821621e-003, 6.821621e-003, 5.842187e-002, -1.716211e-001, 1.054188e-002, -1.513786e-003, 1.147404e-002, 6.831145e-002, -4.889397e-002, -4.448591e-003, -5.068151e-003, 3.136139e-003, -2.286832e-002, -8.347517e-003, 5.628885e-002, 4.197816e-002, 4.197816e-002, 5.628885e-002, -1.014560e-001, 5.952670e-002, 6.662309e-003, -1.888519e-003, -3.399366e-002, -7.118656e-002, -3.609366e-002, -3.955666e-003, -5.907507e-003, -2.261076e-002, -6.213624e-002, -1.213337e-002, 3.514096e-002, 3.514096e-002, -1.213337e-002, 1.687380e-001, 6.357745e-002, 4.880242e-002, -1.213086e-002, 3.340758e-002, 4.345268e-002, 1.504833e-002, 1.469152e-002, -8.133919e-003, 4.338695e-003, 2.209023e-002, -1.470453e-003, 3.301257e-002, 3.301257e-002, -1.470453e-003, 9.580763e-002, 2.213886e-002, 8.366964e-003, 1.585943e-002, 3.659232e-002, 2.813333e-002, 2.345057e-003, 6.217430e-003, 1.244530e-002, 9.497351e-003, -2.466273e-002, 4.156047e-002, 5.656496e-003, 5.656496e-003, 4.156047e-002, 4.786201e-002, -1.055238e-002, -1.039544e-002, 7.287240e-003, 4.850791e-003, -2.157932e-002, -2.066160e-002, -1.692313e-002, -8.611336e-003, 1.024796e-002, -3.997504e-002, 2.130813e-002, 5.420833e-003, 5.420833e-003, 2.130813e-002, 2.995227e-002, 5.144859e-003, 1.793427e-003, -8.408835e-003, -1.712680e-002, -3.256394e-002, 3.931630e-003, -9.192067e-003, -2.454214e-002, -2.315136e-002, 3.410960e-002, 5.035782e-002, 5.206350e-002, 5.206350e-002, 5.035782e-002, 5.620573e-002, 1.011729e-002, 3.315899e-002, 9.609521e-003, 9.199696e-003, 2.365523e-002, 1.171859e-003, -9.359150e-005, 1.454234e-003, 2.599038e-003, 5.583765e-003, -9.768856e-004, -4.591999e-003, -4.591999e-003, -9.768856e-004, -1.018534e-001, -2.600614e-002, 1.483022e-002, 3.262469e-003, 7.434801e-003, 7.363946e-003, -3.419141e-002, -9.603441e-003, 4.992653e-003, 2.130434e-002, -4.519472e-003, 4.343817e-004, -7.807802e-003, -7.807802e-003, 4.343817e-004, -6.326953e-002, -3.621048e-002, -1.684472e-002, -1.685798e-002, -2.952964e-002, -2.120431e-002, -2.072973e-003, 1.147891e-004, 8.558662e-003, 2.843674e-002, -3.454284e-003, 9.987915e-003, 1.306663e-003, 1.306663e-003, 9.987915e-003, -1.712231e-002, -4.603651e-002, -8.534740e-003, 2.120741e-003, -1.056790e-002, -5.611489e-003, 9.078257e-003, 6.008976e-003, 5.327901e-004, -1.011523e-002, 1.727553e-002, 6.574791e-003, -6.654390e-003, -6.654390e-003, 6.574791e-003, -5.897921e-002, -6.192856e-002, 5.968473e-006, -3.341071e-003, -1.006354e-001, -9.433011e-003, -3.101294e-002, -3.353101e-003, -3.921983e-002, -6.071250e-002},
{2.498339e-003, 3.464045e-003, 1.114541e-002, -1.106146e-002, 7.072191e-004, -3.908579e-003, 2.550146e-002, 1.447952e-003, 2.014846e-002, 1.155286e-002, -1.535872e-002, 4.704291e-002, -1.535872e-002, 1.155286e-002, 2.014846e-002, 1.447952e-003, 2.550146e-002, -3.908579e-003, 7.072191e-004, -1.106146e-002, 1.114541e-002, 3.464045e-003, -1.841191e-003, -5.372485e-003, 4.278694e-003, 1.654233e-003, 4.651709e-003, 1.703810e-002, 1.986445e-002, 4.211346e-003, -1.491461e-002, -2.684674e-002, -5.838261e-002, 3.485638e-003, -1.353422e-002, 4.513100e-003, -1.311372e-002, -3.096401e-003, 1.184533e-002, 3.448108e-004, -1.485243e-002, -1.438051e-002, -7.325014e-003, 9.097147e-003, -5.392235e-003, 1.016263e-002, 1.288239e-002, 1.652772e-002, -5.878130e-003, -6.183815e-003, -2.290309e-002, -1.912300e-002, -1.972277e-002, -1.953904e-002, -1.569765e-002, -8.867554e-004, -3.945800e-002, -4.679271e-002, -2.761633e-002, 3.095888e-003, -2.961098e-002, 1.137280e-002, 7.763042e-003, -7.750019e-003,


© ISO/IEC 2004 — All rights reserved

Copyright International Organization for Standardization
Provided by IHS under license with ISO
No reproduction or networking permitted without license from IHS
Not for Resale

1.292152e-002, 4.451263e-003, -3.512822e-002, 3.334869e-002, -5.069026e-003, -2.159007e-002, -9.092773e-003, -1.257316e-002, 3.709021e-002, -1.518433e-002, -2.601579e-003, 1.697734e-002, -1.689907e-002, -4.015458e-002, 1.968609e-002, -3.065918e-002, -5.239806e-002, 6.333063e-003, -1.056275e-002, 1.765692e-002, 6.628808e-003, 2.585151e-002, -1.139384e-003, -1.422072e-002, -1.643838e-002, 1.576890e-002, -1.419904e-002, -1.531414e-002, -9.469959e-005, 3.368251e-002, 1.881758e-002, 3.485922e-002, -1.077137e-002, 1.956873e-002, 4.151953e-002, 3.841779e-002, -4.445256e-003, 1.016607e-002, 5.600648e-002, -7.538907e-004, 3.065467e-002, 4.768510e-003, -2.815169e-002, -4.895111e-003, 1.795451e-002, -1.006311e-002, 3.197735e-002, -4.885235e-002, 6.871092e-003, 1.689189e-002, -9.021880e-003, -7.781640e-003, 1.640706e-002, 3.165924e-002, -3.906811e-002, 2.953946e-003, -6.430136e-003, 1.356233e-002, 9.362519e-002, 2.084836e-002, 4.339626e-002, 6.273510e-002, -1.034879e-002, 2.514372e-002, 7.216500e-003, 1.148814e-002, 3.144027e-002, -2.285852e-002, -4.614504e-003, 2.272987e-002, 3.291842e-002, 3.738649e-003, -6.217969e-003, -1.771940e-002, 8.939191e-003, 3.109675e-002, 4.178819e-002, 5.893856e-003, 1.873922e-002, 2.860870e-002, 4.160235e-002, 5.625445e-002, -3.185620e-003, -4.925044e-002, -8.848153e-003, 2.360473e-002, 1.739534e-002, -9.733171e-003, -2.782803e-002, -1.913094e-002, -8.710861e-003, 2.240657e-002, 1.771652e-002, -1.049852e-002, -3.038125e-002, -2.385295e-002, -1.161547e-002, -1.108710e-002, -3.424668e-003, 3.227592e-002, 4.685438e-002, 1.415499e-002, 1.219051e-002, 3.392000e-002, 3.072776e-002, -4.306958e-002, 3.731859e-002, -2.253926e-003, 1.769711e-003, 1.215257e-002, 2.716993e-002, -2.254432e-002, -3.560261e-002, -3.286775e-002, 3.546385e-002, 4.849742e-002, -2.802781e-002, 1.353061e-002, -9.949458e-003, 1.527079e-002, 5.364164e-002, -3.458329e-004, 1.928525e-002, 2.023982e-002, 2.627981e-002, 1.229333e-002, -3.212779e-003, 1.450878e-002, 2.208682e-002, -6.803709e-002, -9.703132e-003, -1.425788e-002, 2.036828e-002, -1.492206e-002, -1.062243e-002, -1.512423e-002, 1.193443e-003, 6.481161e-002, -3.612877e-002, 1.255190e-002, -8.200819e-003, -2.972423e-002, 1.235512e-002, 8.510683e-003, 3.914587e-003, 1.109070e-002, 9.012512e-003, 3.821533e-003, 1.364948e-002, -9.716892e-003, 1.364629e-002, 1.219163e-003, -2.382024e-002, -4.483402e-003, -1.069773e-002, 9.699203e-003, 3.791586e-002, 9.554248e-003, -4.651191e-003, -3.739110e-002, -4.717469e-002, -1.663935e-002, -1.118229e-002, 3.810030e-003, 6.157609e-003, 8.036157e-003, 1.104913e-002, -4.911178e-003, -6.260848e-003, -1.274900e-002, 3.002799e-003, 7.759778e-003, 1.982201e-002, 1.089573e-002, 5.556942e-003, -4.136603e-002, -6.963908e-002, -5.554918e-003, -4.574356e-002, -2.173914e-002, -4.929864e-002, 4.066505e-002, -7.019231e-003, -3.257648e-002, 3.441916e-003, 1.897382e-002, 6.536768e-003, 3.596322e-003, 5.380111e-003, 3.620438e-003, 1.499922e-002, 5.353010e-003, 6.925882e-004, 1.908917e-002, -8.214198e-003, -1.186724e-002, 6.193390e-002, 2.952372e-002, -8.168697e-002, -2.007273e-002, -3.212446e-003, 4.547234e-002, -1.267692e-002, 1.416129e-002, 1.582554e-002, -2.153528e-002, -5.173881e-003, -4.639308e-003, -1.026565e-002, 1.134810e-002, 9.729212e-003, 3.799680e-003, -8.081736e-004, 1.026364e-002, 4.311184e-003, -4.484188e-003, -2.216406e-002, 4.334438e-003, 3.799604e-002, 5.217251e-002, -3.929607e-003, 3.139640e-004, -1.609593e-002, -8.066272e-002, 2.108792e-002, -4.499526e-002, -1.322765e-002, -1.375325e-003, -5.981228e-004, 9.892171e-003, 3.563496e-003, 4.416038e-003, 1.653698e-002, -7.310661e-004, 1.177587e-002, -2.244329e-003, -6.163812e-003, -1.182893e-002, -1.689896e-002, 9.106571e-003, -1.315633e-002, -3.552806e-002, -2.247216e-002, 5.539811e-003, 4.727447e-003, -1.580263e-002, -2.491213e-002, -2.507146e-002, -2.278274e-003, 1.787712e-002, 1.787712e-002, -2.278274e-003, -2.507146e-002, -2.491213e-002, -1.580263e-002, -3.669004e-002, -6.190556e-002, -6.801858e-002, -5.176548e-002, -8.444280e-002, -7.096713e-002, 5.329629e-003, 2.338001e-002, -2.552004e-002, -5.033700e-002, -6.031218e-002, 3.958430e-002, 4.937944e-002, 5.311784e-002, -4.573736e-002, -5.682461e-003, 8.217040e-003, 2.087623e-002, 3.277275e-002, 3.082370e-002, 3.336436e-004, 1.858554e-002, -9.929351e-003, -2.722085e-002, -6.436751e-002, -4.245470e-003, -8.949754e-003, -1.398518e-002, 1.507230e-002, 2.269006e-002, 9.768174e-003, -7.429899e-003, 7.900095e-002, 2.735765e-002, -5.931272e-002, -3.213932e-003, 6.217572e-003, 8.344757e-003, 2.817766e-003, 1.445520e-002, 1.099320e-002, 3.291531e-003, 4.457809e-003, 1.064842e-001, -3.594005e-002, -5.347709e-003, -1.329576e-003, -8.726226e-003, 1.512238e-002, 1.779011e-002, 7.068246e-003, 7.761507e-003, 7.815870e-003, 1.456454e-002, -3.715161e-002, 7.015159e-003, 2.525209e-002, -3.822979e-003, 3.386142e-003, 8.897938e-003, 1.288942e-002, 3.602794e-003, 5.859873e-003, 7.221392e-003, -8.236171e-003, -2.661403e-002, -2.113485e-002, -3.467704e-003, -3.733254e-002, -1.541671e-002, 2.412747e-002, -2.776741e-002, -2.776741e-002, 2.412747e-002, -1.541671e-002, -3.733254e-002, -3.467704e-003, -1.606455e-002, -8.485852e-002, 1.632126e-003, -5.963166e-002, -1.735201e-003, 5.384754e-003, -2.766010e-002, -6.829882e-002, -5.712648e-002, -1.001291e-001, -5.617707e-002, 1.537282e-003, -5.563422e-002, 5.805507e-002, 1.596603e-002, 4.532755e-002, 1.922378e-002, -1.551411e-002, -1.142503e-002, 1.836064e-002, 5.834338e-002, -3.419756e-002, -2.552410e-002, 2.341049e-002, -1.715295e-003, 2.014223e-002, 2.712283e-002, 1.481660e-002, 1.988598e-002, -1.556881e-002, -2.381206e-002, -7.490225e-002, -8.149208e-002, 7.209502e-002, 7.937004e-002, -4.014806e-003, -3.944415e-003, 1.055201e-002, 1.217322e-002, 1.543859e-002, 7.894055e-003, -1.535507e-002, -1.534747e-002, -2.001033e-002, -2.540464e-002, -2.332327e-002, 5.477991e-003, -5.224883e-003, 7.944554e-003, 9.385000e-003, 3.465460e-003, 1.019349e-002, -

© ISO/IEC 2004 — All rights reserved


Copyright International Organization for Standardization
Provided by IHS under license with ISO
No reproduction or networking permitted without license from IHS
Not for Resale

8.756908e-004, 2.545145e-002, -2.004929e-002, -2.288566e-003, -4.280478e-002, -1.109362e-002, 6.524343e-003, 1.134914e-002, 6.318546e-003, 1.526093e-002, 3.314130e-003, -6.426595e-003, 1.626972e-002, 2.259231e-002, -1.412034e-003, -4.932142e-003, -9.552349e-003, 2.212103e-003, -2.331115e-002, 1.490204e-002, 1.490204e-002, -2.331115e-002, 2.212103e-003, -9.552349e-003, -4.932142e-003, 6.313623e-002, -2.111662e-002, -3.756989e-002, 7.872083e-004, 2.165748e-002, 2.766954e-002, 3.504821e-002, 1.284049e-001, 7.704446e-003, 3.252759e-002, -4.866942e-002, -3.879897e-002, -1.454323e-001, 5.907285e-003, 1.859055e-003, -6.052737e-003, 2.023517e-002, 4.460985e-003, -2.672628e-002, -3.922394e-002, 3.730978e-002, 4.728336e-002, -2.823290e-002, -9.183204e-002, -4.491357e-002, -2.299812e-002, 2.905674e-003, -7.397944e-004, 4.873856e-003, 1.062544e-002, 9.185901e-003, 4.812848e-002, 1.849107e-002, -3.948564e-002, -2.101934e-002, -2.537561e-002, -3.260956e-002, -9.076472e-003, -6.350724e-003, 1.052794e-002, 1.700676e-002, 1.853011e-002, 5.130279e-002, 4.739720e-002, 8.346330e-002, 2.383751e-002, -4.426016e-002, -1.456194e-002, -1.930947e-002, -1.979438e-002, 1.574964e-002, 1.464842e-002, 8.779700e-003, 2.277200e-002, 3.285421e-002, -6.625372e-003, 1.715645e-002, -1.019639e-002, -1.288041e-002, -1.587004e-002, -1.582151e-002, 7.379869e-003, 4.769806e-003, 9.631755e-003, 1.229816e-002, 1.686786e-002, 2.031778e-002, -6.043322e-003, 1.074326e-002, -1.002820e-002, -2.613714e-002, 3.908347e-003, 3.908347e-003, -2.613714e-002, -1.002820e-002, 1.074326e-002, -6.043322e-003, 3.536621e-002, -1.545835e-002, -1.951680e-002, 3.481500e-002, 7.688677e-002, 3.659623e-002, 7.976709e-003, 6.069864e-002, 4.639477e-002, -1.564553e-002, -6.148257e-002, 4.982772e-002, 3.137894e-002, 3.985162e-002, 3.778609e-002, 6.397542e-003, 5.086865e-002, 4.617963e-002, 6.491167e-002, 9.985605e-002, 7.085590e-002, -3.296367e-002, -4.507433e-003, 5.369773e-002, 3.011684e-002, 8.388105e-002, 3.358822e-002, 9.446959e-003, 2.333058e-002, 3.002240e-002, 4.097164e-002, -4.751070e-002, -1.365973e-001, -2.387022e-002, 9.211743e-002, 2.899320e-002, 4.433822e-002, 3.026435e-002, 3.175169e-002, -6.223202e-004, 6.295945e-003, 1.256830e-003, -6.429612e-002, -1.045726e-002, 9.796638e-002, 4.461124e-002, -1.708150e-003, 1.547502e-002, 2.094607e-002, 2.015285e-002, -4.997678e-003, -4.717828e-003, -2.318499e-002, -5.242585e-002, 1.721640e-002, 2.617578e-002, 3.701659e-002, 8.229084e-003, 1.374796e-002, 9.417514e-003, 1.388445e-002, -3.605442e-003, -8.052640e-003, -2.879608e-002, 3.963424e-003, 2.592740e-002, -7.755967e-003, 5.105816e-002, -9.781310e-004, -9.781310e-004, 5.105816e-002, 1.465207e-001, 1.902560e-002, -1.875064e-002, 1.663258e-002, 1.876914e-002, 4.723930e-002, -5.722737e-003, 4.337958e-003, 1.723855e-003, 1.762540e-003, -7.386299e-002, 8.190590e-002, 3.776094e-002, 3.776094e-002, 8.190590e-002, 1.277648e-001, 4.936839e-002, 1.038053e-002, 9.604271e-003, 1.227661e-002, -4.731745e-002, -2.202243e-003, 4.082807e-003, -1.680964e-004, 4.006126e-003, 3.659648e-002, 1.714257e-002, -1.041941e-003, -1.041941e-003, 1.714257e-002, 9.683696e-002, 1.888938e-002, 1.246970e-002, 1.211616e-002, 3.900747e-003, -1.463185e-002, 9.293302e-003, -1.464224e-003, -1.850070e-003, -1.816657e-002, 5.608409e-002, 1.772591e-002, 3.639267e-002, 3.639267e-002, 1.772591e-002, 1.571469e-001, 1.605468e-002, 1.327036e-002, -8.733672e-003, 6.977345e-002, 6.577034e-002, 4.051188e-004, 2.915407e-003, 2.587160e-003, -4.991713e-003, 1.774877e-002, 1.914537e-002, -5.896941e-003, -5.896941e-003, 1.914537e-002, 4.530550e-002, 3.636511e-002, 1.143118e-002, 5.449556e-003, 2.738312e-002, 2.866132e-002, 8.486047e-003, -1.990557e-003, 1.058423e-002, 2.046125e-002, 6.859763e-002, -2.007469e-001, -5.219229e-002, -5.219229e-002, -2.007469e-001, 5.221981e-002, 6.814882e-003, -3.140166e-003, 6.990122e-003, 1.238396e-004, 1.042944e-001, -1.270172e-002, 2.266612e-003, 9.449283e-003, 1.222017e-003, -9.105769e-002, -1.504270e-001, -1.480794e-002, -1.480794e-002, -1.504270e-001, 7.212738e-002, -8.512864e-004, 8.360860e-003, -3.197801e-003, -1.219279e-002, 1.124839e-001, -1.775403e-002, 1.625873e-003, 4.219952e-003, -7.102229e-003, -2.275772e-002, 6.488467e-003, -3.574464e-002, -3.574464e-002, 6.488467e-003, 3.203613e-002, 2.914519e-002, 2.141896e-003, -1.328946e-002, 2.092173e-002, 2.001316e-002, 1.887792e-002, 5.929216e-004, -2.570602e-003, -9.051175e-003, 1.270980e-002, 3.933764e-004, 3.190081e-002, 3.190081e-002, 3.933764e-004, 2.178817e-002, 2.019977e-002, 5.263550e-003, 1.663611e-002, 2.308495e-002, 1.794886e-002, 1.105339e-002, 8.377625e-003, 1.706856e-002, 1.694810e-002, 2.423107e-002, 8.067228e-002, 6.877611e-004, 6.877611e-004, 8.067228e-002, 6.415469e-003, 2.555883e-002, 1.186620e-002, 1.312391e-002, 1.555862e-002, 5.490702e-003, 1.049034e-002, 8.033542e-003, 3.701615e-003, 3.224617e-002, 3.106217e-002, 6.991402e-002, 1.044849e-004, 1.044849e-004, 6.991402e-002, 4.083899e-002, 2.575771e-002, 1.308663e-002, 2.565379e-002, 4.034578e-002, 7.688344e-003, 2.445885e-002, 6.852140e-003, 1.548359e-002, 1.425833e-002, -1.134746e-002, -1.855249e-002, 1.659641e-002, 1.659641e-002, -1.855249e-002, 6.261407e-002, 2.582965e-002, 2.203010e-002, 2.476838e-002, 3.526962e-002, 2.642100e-002, 1.997526e-002, 2.620446e-002, 1.084874e-002, 6.181424e-003, -1.436754e-002, 7.815150e-002, 1.602542e-002, 1.602542e-002, 7.815150e-002, -1.877741e-002, -8.429041e-002, -1.640074e-002, 7.349210e-003, 1.883336e-002, -9.326708e-003, -5.483880e-002, -2.598765e-002, -1.157073e-004, -1.000188e-003, -2.398536e-002, 2.140140e-002, -1.674459e-003, -1.674459e-003, 2.140140e-002, 3.111898e-002, -2.588908e-003, -3.283213e-003, -1.619511e-002, -1.303563e-002, 1.542164e-002, 9.275119e-003, 1.221391e-003, 2.371465e-003, 1.433891e-002, 1.003816e-002, -1.727989e-002, -1.970122e-002, -1.970122e-002, -1.727989e-002, 8.014698e-002,


© ISO/IEC 2004 — All rights reserved

Copyright International Organization for Standardization
Provided by IHS under license with ISO
No reproduction or networking permitted without license from IHS
Not for Resale

1.378957e-002, -4.779182e-003, 1.234322e-002, 1.637721e-002, 1.522066e-002, 1.268832e-002, 2.760136e-003, 4.101846e-003, 5.974620e-003, -9.435079e-003, 2.414127e-002, -6.088359e-003, -6.088359e-003, 2.414127e-002, -1.039374e-001, 1.184636e-002, 2.397307e-002, 2.597211e-002, -4.202859e-002, -2.850308e-002, -3.727199e-003, 1.753937e-002, -9.035257e-003, -6.511384e-002}, {2.987189e-003, -7.000566e-003, -1.643531e-002, 1.538966e-002, -2.717457e-003, -6.416457e-003, 5.120578e-004, -4.603262e-003, 2.435750e-002, 6.768232e-004, -8.170446e-003, -7.126110e-003, -8.170446e-003, 6.768232e-004, 2.435750e-002, -4.603262e-003, 5.120578e-004, -6.416457e-003, -2.717457e-003, 1.538966e-002, -1.643531e-002, -7.000566e-003, 2.653665e-002, 9.445898e-003, -2.428513e-002, 7.742643e-003, -6.842078e-003, -7.535346e-003, -1.916630e-002, -7.124654e-003, 1.948609e-002, 1.715085e-002, 9.282788e-003, -1.462102e-002, -4.671871e-002, -2.639288e-003, -3.041132e-003, -1.942139e-002, 4.648509e-002, 2.843317e-002, -1.658741e-002, 1.035512e-002, -7.769804e-003, -3.346232e-003, 2.335146e-002, 1.522132e-002, 2.763530e-002, 9.517151e-004, 3.669860e-002, 2.046518e-003, -1.524214e-002, 1.060840e-003, 3.043502e-002, 3.088068e-002, 2.128473e-002, 4.219165e-002, -3.430990e-002, -2.970197e-003, 3.252062e-002, 1.122140e-002, 5.239909e-002, 1.252881e-002, 3.394909e-002, 2.984626e-002, 1.369323e-002, -3.694100e-003, 1.721215e-002, -5.498685e-003, -3.334211e-002, -1.793211e-002, 9.513281e-003, 1.946123e-002, -1.589892e-002, 4.802549e-004, 3.131848e-002, 1.820585e-002, -1.775789e-002, 3.196543e-002, 6.743663e-002, 3.215820e-002, 2.760833e-002, 2.176064e-002, 1.855820e-002, 2.430478e-002, 1.687616e-002, 1.849666e-002, 1.268398e-002, -3.110776e-002, -3.567116e-002, 2.669289e-002, -3.980281e-003, 2.091969e-002, -3.232157e-003, 1.984859e-002, 5.888061e-002, -3.339415e-002, 2.999159e-002, 6.021091e-003, 2.725444e-002, 5.976218e-002, 1.307011e-002, 6.856096e-003, 5.709836e-002, -1.044394e-002, 2.879521e-002, 4.985303e-002, 3.147538e-002, -3.005477e-002, -1.367965e-002, -2.271204e-002, 3.984462e-002, -1.589574e-002, 5.767787e-003, 1.733198e-002, 1.515546e-002, -2.034211e-002, 2.520932e-002, -1.174755e-002, 1.162307e-002, 7.535797e-002, 2.954416e-002, 8.099352e-003, 3.973277e-002, -1.832844e-003, 1.449582e-002, -7.711692e-002, -1.755073e-002, 2.397722e-002, 2.328450e-002, 2.003384e-002, 9.953095e-004, -2.152508e-002, -2.527417e-003, -1.611173e-002, 4.696519e-002, 7.323082e-003, -1.001233e-002, 4.863391e-002, 4.023522e-002, -2.259099e-003, 1.035122e-001, 3.051639e-002, 9.149907e-003, 1.679492e-002, 3.689262e-002, -5.981557e-004, 1.465867e-002, -3.660698e-002, 5.875114e-003, 4.323098e-002, 8.658527e-003, 1.872668e-002, 2.018737e-003, -3.029346e-002, -3.438594e-002, 3.500994e-002, -3.215537e-002, -6.018573e-004, -2.668977e-002, -1.656849e-002, 1.670096e-002, 4.453957e-002, 1.156253e-002, 4.904907e-002, 5.169103e-002, 3.746061e-003, 1.095711e-002, -1.935531e-002, -4.619136e-002, -1.567216e-002, 4.485090e-002, -4.654738e-002, -2.447062e-002, -2.691070e-002, -2.474673e-002, 2.402330e-002, 3.221257e-002, 9.448947e-003, -6.112619e-003, 1.484131e-002, 2.115117e-003, -2.931821e-002, 2.969059e-002, 8.533698e-002, 7.382981e-002, 4.853643e-002, 3.038800e-002, -1.157470e-002, -1.616933e-002, -2.132059e-002, -2.464919e-002, -2.766519e-002, -5.480763e-002, -3.534274e-002, -8.028036e-002, -1.278151e-002, -5.222638e-003, 3.456587e-002, 4.775720e-002, -2.157416e-002, -6.858340e-003, 3.593337e-002, -3.692377e-002, -3.650830e-002, 1.212624e-002, 3.685554e-003, 1.137289e-002, 1.671775e-002, 1.600191e-002, -6.472124e-003, -3.121678e-003, -1.920397e-002, -7.276172e-003, 7.820915e-004, 2.074513e-002, -2.910235e-002, 3.145411e-002, -5.502403e-002, 1.922583e-002, -2.863051e-002, -6.798625e-002, -1.789390e-003, -6.170429e-002, -1.683363e-002, -2.973692e-002, -4.220023e-002, -4.615216e-003, 1.715957e-003, 8.038784e-003, 6.377420e-003, 1.219795e-002, -1.197731e-002, -2.390227e-002, -1.882332e-002, -1.206226e-002, 6.446749e-003, -4.081027e-003, -4.225419e-002, -3.634079e-003, -1.200751e-002, -3.057256e-002, -3.220474e-002, 4.759750e-003, -3.799134e-003, 9.592859e-004, 2.170608e-002, -6.009568e-002, -5.730684e-003, 2.146039e-002, -3.956800e-003, 2.334547e-002, 1.449047e-002, 1.016315e-002, 4.884357e-004, -9.996278e-003, -2.037226e-003, -1.476421e-002, 5.804584e-003, 7.647414e-003, -4.188423e-002, -1.601878e-002, -1.111898e-003, 1.382344e-002, -1.586502e-002, 6.809866e-004, 2.516154e-002, -3.261136e-002, -3.668766e-003, -1.465885e-002, 1.053201e-002, 1.175870e-002, -2.516556e-004, 1.281792e-002, 1.379244e-003, 1.854360e-003, -4.186822e-003, -1.104253e-004, -1.154469e-002, -6.159020e-003, -1.387677e-003, 8.344608e-003, 1.410466e-002, -4.194544e-003, -1.030289e-002, -6.902858e-002, 4.659082e-002, 6.632124e-002, -3.093398e-002, -8.269293e-003, -1.109055e-002, -2.486618e-002, 6.500573e-003, 3.674344e-003, 9.135741e-003, 2.978917e-003, 4.041349e-004, 6.015651e-003, -1.449486e-004, 2.905814e-003, -1.202438e-002, 9.537920e-003, -6.517785e-004, 2.821357e-002, -1.324073e-002, 4.374962e-003, -2.859622e-002, 5.189417e-003, -8.209917e-002, -4.256933e-003, 2.080688e-003, 9.350438e-003, 1.382104e-002, -2.872567e-003, 2.589228e-002, 2.589228e-002, -2.872567e-003, 1.382104e-002, 9.350438e-003, 2.080688e-003, -9.754161e-002, -4.645104e-003, 3.503608e-002, 5.519566e-002, 1.273327e-002, 4.520765e-003, -3.216060e-002, -5.519484e-002, -4.742441e-002, -5.785276e-002, -3.440632e-002, 1.474091e-001, 5.010777e-002, -3.175869e-002, 5.966506e-002, 3.697921e-002, 2.800317e-002, -2.790824e-002, -1.949972e-002, -2.660034e-002, 2.178867e-002, -3.890201e-002, -1.900121e-001, -1.208164e-001, 4.141420e-002, 7.067855e-002, 6.290566e-002, 3.063565e-002, 4.569990e-003, 4.878301e-003, -3.931417e-003, 8.104254e-003, -2.683185e-002, 5.305606e-002, 1.450075e-002, 2.693457e-003, 3.106575e-002, 6.146561e-002, 3.467713e-002, 4.499100e-003, 3.391992e-003, -

© ISO/IEC 2004 — All rights reserved


--`,,```,,,,````-`-`,,`,,`,`,,`---

Copyright International Organization for Standardization
Provided by IHS under license with ISO
No reproduction or networking permitted without license from IHS
Not for Resale

3.698745e-003, -6.793069e-003, -3.925492e-003, 5.655109e-002, 5.127746e-002, 1.089882e-002, -1.650290e-002, 5.991431e-003, 1.423347e-002, 1.665301e-003, -1.165179e-003, -5.836724e-003, -5.373985e-004, -6.160574e-003, 3.982812e-003, -1.099153e-002, 2.696999e-002, 1.184928e-002, 8.182418e-003, 1.335496e-002, 1.589981e-003, 1.615911e-003, 2.082596e-003, 5.126723e-003, 9.821588e-003, 2.519486e-002, -3.813670e-003, 1.943955e-003, -4.307841e-003, -1.349619e-002, -1.919881e-002, -1.919881e-002, -1.349619e-002, -4.307841e-003, 1.943955e-003, -3.813670e-003, -1.011661e-001, 6.779026e-002, -1.168823e-001, -5.800139e-002, -5.539951e-002, -3.969735e-002, -3.712068e-002, -3.593555e-002, 6.331198e-002, 6.182660e-002, -8.385500e-002, 1.300872e-001, -4.893761e-002, -6.139012e-002, -5.741078e-002, -4.464607e-002, -3.328386e-002, 3.517992e-002, 8.149046e-002, 5.824242e-002, -1.239041e-002, -2.884326e-002, -1.237592e-001, -1.529905e-004, 1.292769e-003, 1.301137e-003, -2.678467e-004, -9.629340e-003, 3.521635e-002, 2.340714e-002, 2.060736e-002, 7.780899e-002, -7.744313e-002, -5.061000e-002, -2.008809e-002, 6.589200e-003, 5.847516e-003, 6.804980e-003, 1.168215e-003, 1.013387e-002, -8.138691e-003, 2.561272e-003, 6.502512e-003, -3.662034e-003, 4.917731e-003, 5.508316e-003, 1.760264e-003, 3.162318e-003, 1.470888e-003, 5.847562e-003, -1.089308e-002, -1.881763e-003, 5.598598e-003, 1.050361e-002, 5.346063e-002, -2.025449e-003, 1.810087e-002, -2.969940e-003, -4.716406e-003, -3.392804e-003, 1.440763e-003, -3.689255e-003, -8.471575e-003, 1.526615e-002, 1.462673e-002, -1.372127e-002, -5.682688e-003, 1.696211e-002, 2.748535e-002, 6.659999e-003, -2.530436e-002, -1.057410e-002, -1.057410e-002, -2.530436e-002, 6.659999e-003, 2.748535e-002, 1.696211e-002, 1.409356e-002, -9.353008e-002, -2.862628e-002, 9.425584e-003, 8.919506e-003, -1.508713e-002, -4.703662e-003, -4.263867e-002, -7.431908e-002, -9.327810e-002, 2.046963e-002, 5.166473e-002, -9.973375e-004, 2.698257e-002, -2.337321e-002, 1.232959e-002, -5.315726e-003, 1.161849e-002, -6.549344e-003, 9.675551e-003, -1.077328e-002, 8.895376e-003, 3.081361e-002, 7.580062e-002, 4.645546e-002, -1.179644e-002, -9.979007e-003, -3.314639e-003, -5.626475e-003, -1.827384e-002, -2.155280e-002, -2.366739e-002, -4.381200e-002, 3.786778e-002, -1.315383e-002, 1.036357e-002, 8.459725e-003, 1.378357e-003, 1.537598e-003, -2.238232e-003, -1.112955e-002, -1.662953e-002, -4.926983e-002, 2.369437e-002, 6.396475e-002, -6.103645e-002, -2.735060e-002, 1.251552e-002, 1.237391e-002, 2.550136e-003, -1.226430e-002, -1.719185e-002, -1.427712e-002, -1.451900e-002, -7.385089e-003, 5.363629e-002, 2.177135e-002, -6.753090e-003, -8.689800e-003, 1.348305e-002, 1.147788e-002, -7.458784e-004, -3.821803e-003, -6.365801e-003, -8.715263e-003, 2.500849e-002, -1.226805e-002, 1.788905e-002, 2.578652e-003, 1.807071e-002, -1.082778e-003, -2.143302e-002, -2.143302e-002, -1.082778e-003, 1.807071e-002, 2.578652e-003, 1.788905e-002, 3.936850e-002, 1.346204e-002, 4.446130e-002, 4.874344e-002, 7.070634e-003, -8.798106e-003, -2.408769e-002, -2.235950e-002, -8.225810e-002, -1.145451e-001, -7.006182e-002, -6.154761e-002, -6.783425e-002, 1.919410e-002, -3.846607e-002, -2.657521e-002, -1.925585e-002, -2.449541e-002, -5.994748e-002, -4.605860e-002, 1.559562e-002, -2.117298e-002, 1.162948e-001, 8.077274e-003, -8.743612e-002, -3.814701e-002, 6.181523e-003, -2.058472e-003, -2.602570e-002, -4.587578e-002, -9.803654e-004, 4.221576e-002, 2.417847e-002, 2.774637e-002, -2.242181e-003, -1.792975e-002, -1.528495e-002, 4.433213e-003, 1.275045e-002, -1.824745e-002, -9.870618e-003, 4.209863e-004, 1.908755e-002, 2.624478e-002, 4.363688e-002, -3.509622e-002, -3.019035e-002, -1.019077e-002, -1.436586e-002, -7.433913e-003, -4.993519e-003, -3.716749e-003, 8.026449e-003, -3.021553e-002, -3.284480e-002, 4.507781e-002, 1.087973e-002, -1.138435e-002, -1.687789e-002, -1.434849e-004, 2.696198e-003, 7.238154e-003, 8.307473e-003, 4.817549e-003, -3.270391e-003, -6.704125e-003, -2.043135e-004, -4.050109e-002, -3.334072e-002, -3.334072e-002, -4.050109e-002, 1.726903e-002, 4.912424e-002, 4.369847e-002, -1.385356e-002, -2.404684e-002, 1.603793e-002, -3.525634e-003, 2.471310e-002, -5.937894e-003, 6.573771e-004, -8.225337e-002, -1.880278e-002, -1.016991e-002, -1.016991e-002, -1.880278e-002, -1.203354e-001, -3.741263e-002, -1.065339e-002, -1.666145e-002, -3.443503e-002, 1.134613e-002, -1.269509e-002, -3.277944e-005, -7.269229e-003, -8.374084e-003, 2.779327e-002, 3.513507e-002, 2.932184e-003, 2.932184e-003, 3.513507e-002, 2.666336e-002, -1.726027e-002, -1.362897e-002, -6.502312e-003, -5.415162e-003, 3.101740e-002, -3.223997e-003, -3.805974e-003, -3.055106e-003, -5.683319e-003, -3.320851e-002, 2.056928e-002, -6.317200e-002, -6.317200e-002, 2.056928e-002, -1.708472e-002, 5.887333e-004, -7.925632e-003, 4.429796e-002, 4.302886e-002, -5.566487e-003, 1.330681e-002, -3.830554e-003, -2.454988e-004, 2.421668e-002, -4.913029e-003, -4.654237e-002, -1.988271e-002, -1.988271e-002, -4.654237e-002, 8.380700e-002, 3.184836e-002, 1.668399e-002, -1.983134e-003, 2.095877e-002, 7.523984e-003, 9.913452e-003, 1.905297e-002, 1.868504e-003, 3.595627e-003, 8.311378e-002, -2.158453e-002, -1.563788e-002, -1.563788e-002, -2.158453e-002, 1.404828e-001, 1.999352e-002, 5.214195e-003, -7.381783e-003, -4.793313e-003, 2.542657e-002, -3.500667e-003, 9.333004e-003, 7.185439e-003, 3.435393e-004, 1.091831e-001, -1.529901e-001, -4.710274e-002, -4.710274e-002, -1.529901e-001, 1.938431e-001, -4.277765e-002, -3.692578e-003, -4.811791e-003, -2.462311e-003, 1.042197e-002, 1.735473e-002, 1.105937e-003, 3.292280e-003, -8.500446e-003, -7.857304e-002, 9.314938e-003, 2.683035e-002, 2.683035e-002, 9.314938e-003, 6.386159e-002, -1.422965e-002, -5.425040e-003, 1.697099e-002, 3.744331e-002, -2.750739e-003, -8.777987e-004, -1.362602e-003, 6.505814e-003, 1.692078e-002, -1.859835e-003, 2.324762e-002, -4.529499e-002, -4.529499e-002, 2.324762e-002, 1.240553e-002, -2.076178e-003, -2.768884e-003,


© ISO/IEC 2004 — All rights reserved

Copyright International Organization for Standardization
Provided by IHS under license with ISO
No reproduction or networking permitted without license from IHS
Not for Resale

7.523364e-004, -9.404107e-004, 2.253099e-003, -1.697163e-003, -2.050204e-003, 1.086605e-003, -1.046289e-003, -3.315004e-002, 1.133588e-002, 8.156415e-003, 8.156415e-003, 1.133588e-002, 9.282675e-002, 4.912934e-002, 2.084477e-002, 5.500700e-003, 2.831826e-002, 5.268697e-003, 1.195437e-002, 3.826711e-003, 3.448353e-003, -5.556967e-003, -9.585688e-002, 1.576108e-003, -4.569825e-003, -4.569825e-003, 1.576108e-003, 9.571542e-002, 7.153648e-003, 6.218117e-003, 1.167524e-002, 2.254995e-002, 3.246664e-003, -1.266485e-002, 3.873312e-003, 4.122824e-003, 1.161287e-002, 2.828032e-002, -4.095650e-004, -1.166850e-002, -1.166850e-002, -4.095650e-004, -2.450672e-002, -1.254880e-003, -8.558572e-003, -1.147613e-002, -3.137655e-002, -2.372220e-003, -8.613191e-003, 5.051317e-003, -4.637904e-003, -1.053494e-002, 4.145111e-003, -2.601788e-002, -8.227123e-003, -8.227123e-003, -2.601788e-002, -2.988533e-003, -1.509318e-002, -9.251223e-003, -1.002802e-002, -2.327947e-002, -1.299126e-002, -1.093908e-003, -2.003784e-004, -5.444998e-003, -1.450703e-002, 2.518208e-002, 5.971884e-002, 2.747356e-002, 2.747356e-002, 5.971884e-002, -1.013541e-001, -1.731648e-002, -5.594167e-003, -1.516255e-002, -4.931754e-002, 1.948468e-002, 8.390311e-003, 3.860067e-005, -8.429112e-003, -2.312542e-002, 4.848888e-002, 6.831288e-002, 4.121618e-002, 4.121618e-002, 6.831288e-002, -1.475481e-001, -3.438300e-002, -9.098177e-003, -8.851360e-003, -1.347549e-002, 7.927704e-004, -1.340147e-002, -5.868445e-003, 1.094722e-003, 7.457461e-003, 6.819631e-003, -3.085170e-002, -2.098385e-002, -2.098385e-002, -3.085170e-002, 5.859922e-002, 1.576046e-003, -2.377637e-002, -4.465199e-002, -1.421851e-002, -5.129426e-003, -7.990623e-003, -3.616262e-003, -1.907303e-002, 4.375880e-003},
{-5.111066e-004, 5.418221e-005, -2.762859e-003, -7.046662e-003, 4.035733e-004, -8.140020e-003, -3.375819e-003, -3.091432e-003, 3.258559e-003, 1.185170e-002, 1.525671e-002, 9.360108e-003, 1.525671e-002, 1.185170e-002, 3.258559e-003, -3.091432e-003, -3.375819e-003, -8.140020e-003, 4.035733e-004, -7.046662e-003, -2.762859e-003, 5.418221e-005, -2.429306e-002, 6.413193e-003, -1.267949e-002, -1.067652e-002, -2.389962e-002, -1.430366e-002, 1.096058e-002, 2.883844e-003, 9.836901e-003, -2.060773e-002, -9.404804e-003, -6.276143e-004, 1.920738e-002, 1.451736e-002, 4.820954e-002, 3.269999e-003, -9.661019e-003, -6.262235e-003, 8.469225e-004, 6.406906e-004, -2.766063e-003, 3.240776e-003, -6.597286e-003, -2.336477e-002, -1.335340e-002, -3.614093e-002, 2.014079e-003, -2.521308e-002, -1.015206e-002, 1.634566e-002, 7.721499e-003, 2.118418e-002, -4.707074e-002, 4.738296e-002, 1.392848e-002, 1.345220e-002, 3.179959e-002, 1.867515e-002, -1.398732e-002, 1.013730e-002, -2.241287e-002, -5.688816e-003, -1.127708e-002, -2.034865e-002, 3.964896e-002, 3.510811e-002, -1.107204e-002, -4.191982e-002, 3.381049e-002, -2.868980e-002, 1.762836e-003, 4.183501e-002, 3.068772e-002, -1.779249e-002, -5.621768e-003, -1.296844e-002, -5.785722e-002, -5.112884e-002, 5.705401e-002, 3.546762e-002, 5.036475e-003, 1.449659e-002, 3.687932e-003, -3.198712e-002, -1.609913e-002, 1.108644e-002, -1.760877e-002, -5.443279e-002, -3.751166e-002, 4.822225e-003, 3.826461e-002, -3.198467e-002, -1.498899e-002, 1.542680e-002, 1.328584e-002, 2.450878e-002, -5.280640e-002, -4.964929e-002, -1.993193e-002, -3.879911e-002, -2.690701e-002, -3.142324e-002, 2.570239e-002, 3.415895e-002, -5.051939e-003, -2.874133e-002, -2.080152e-002, -7.061350e-002, 1.033199e-002, -3.911288e-003, 3.076413e-002, -1.658171e-002, 1.012701e-002, -2.375081e-002, -5.267438e-002, -2.116558e-002, -6.281889e-003, -3.694988e-003, -2.813221e-002, -7.430600e-003, 2.745225e-002, 3.183456e-002, -2.087982e-002, 6.325268e-003, -4.837755e-002, 2.962766e-002, 1.607124e-002, -1.845846e-002, -2.039947e-002, 1.411241e-002, -1.131868e-002, -2.624369e-002, -3.532829e-002, -2.375496e-002, -1.655824e-002, -1.911676e-002, 5.639783e-002, 9.681811e-003, -1.424368e-002, -3.638736e-002, -3.609483e-002, -3.622984e-002, -3.621794e-002, -1.970065e-002, 8.620346e-003, 9.158007e-002, 1.351389e-002, 3.216599e-002, 5.157610e-002, -2.577565e-002, -3.898218e-002, -1.235637e-002, 2.607120e-002, 3.177262e-002, 3.325255e-003, -1.774060e-002, -1.433779e-002, -1.818718e-002, 1.047387e-002, 2.748667e-002, 6.258179e-003, 2.904390e-003, -7.475389e-003, -1.096868e-002, 1.474265e-003, 2.859366e-002, 4.076709e-002, 5.060316e-002, 3.862872e-003, -2.131834e-002, -9.243149e-003, -5.190831e-002, -7.786137e-003, -2.660722e-002, 6.360848e-002, 4.607214e-003, 9.049125e-003, -8.776230e-003, 4.223278e-004, -3.507839e-002, -2.314336e-002, -2.191772e-002, -4.089189e-002, -1.318384e-002, -2.206266e-002, 2.552662e-002, 1.349922e-002, 9.212356e-003, 9.199223e-004, -3.328675e-002, 5.447765e-002, 3.558720e-002, -3.178601e-002, -8.136832e-003, 1.329065e-002, 1.897321e-002, -6.792768e-004, 1.358234e-002, 4.361293e-003, 4.364092e-002, 3.538482e-003, -1.469214e-002, 4.315407e-002, -6.399596e-003, 8.209330e-003, 9.503672e-003, 2.076780e-003, -4.199078e-003, 8.212475e-003, 4.267672e-003, 1.835944e-002, 5.896655e-002, 3.777194e-002, 4.538861e-002, 1.473022e-002, -4.096045e-003, 6.305279e-002, -1.749281e-005, -3.934652e-002, 4.114535e-002, 5.206001e-003, 2.640799e-002, -2.143968e-002, -3.208639e-002, -1.452999e-003, 1.904034e-002, -6.442947e-003, -4.360727e-003, -3.492376e-003, 1.384841e-002, -3.767447e-003, -5.684514e-003, 8.990349e-003, 5.888833e-003, 2.705075e-002, 4.879164e-002, 2.829177e-002, 8.972454e-002, 4.952578e-002, 5.032400e-002, 6.103856e-002, -3.782881e-003, 4.887335e-002, 3.329928e-002, -4.153769e-003, 1.648007e-002, 3.064057e-002, 1.183315e-002, -1.262208e-003, 1.126785e-002, -7.686707e-003, -4.578781e-003, 1.370636e-003, -1.133898e-002, 1.539800e-002, -6.108951e-003, 2.358782e-002, 4.381023e-002, 4.699349e-002, 4.848687e-002, 1.131679e-001, -1.828149e-002, 1.654945e-002, 2.708340e-002, -1.590033e-002, -1.538063e-002, 9.691219e-003, -1.720880e-002, -1.967739e-003, 1.639195e-002,

© ISO/IEC 2004 — All rights reserved


Copyright International Organization for Standardization
Provided by IHS under license with ISO
No reproduction or networking permitted without license from IHS
Not for Resale

5.725796e-003, 7.288901e-003, 7.657804e-003, -1.299923e-002, -1.307400e-003, 4.305945e-003, 6.186239e-003, 1.413895e-004, 1.101139e-002, 1.576292e-002, -8.903778e-003, 4.064600e-003, 1.151798e-002, 3.830863e-002, 1.603935e-002, 3.070230e-002, -3.128607e-002, 1.879483e-002, 3.484844e-002, -5.134309e-003, 5.758611e-003, -6.304602e-003, 4.678459e-003, -5.284595e-003, -4.687209e-003, 2.602620e-004, -2.797097e-003, -1.786319e-004, 4.786322e-003, 1.613254e-003, -4.458626e-003, 9.931703e-003, 1.260738e-002, 3.908357e-002, 3.189186e-002, 2.263459e-002, 2.114438e-002, -4.943106e-003, 1.081085e-002, -3.553336e-004, 3.540136e-002, -3.373134e-003, -3.373134e-003, 3.540136e-002, -3.553336e-004, 1.081085e-002, -4.943106e-003, -3.698127e-002, 6.057344e-002, 9.179106e-003, -1.742892e-002, -4.078768e-003, 1.999482e-002, 2.777763e-002, 3.140845e-002, 1.804384e-002, -4.784820e-002, 1.143624e-001, 1.218305e-001, 2.747928e-002, -3.346698e-002, -5.242699e-002, -6.123018e-003, -2.666151e-002, -2.539575e-002, -3.206943e-002, -1.930654e-002, -1.393360e-002, 1.416899e-001, 2.461357e-002, -8.019671e-002, 5.131683e-002, -1.414964e-002, -5.551109e-003, -1.264933e-002, -5.305458e-003, -6.934297e-003, 1.984635e-002, 8.335832e-002, 1.788439e-001, -2.716359e-002, -6.083254e-002, -5.100520e-003, -1.363026e-002, -2.475667e-002, -2.320876e-002, -5.919611e-003, 2.767988e-003, 1.634904e-002, 4.545359e-002, 2.599291e-002, 4.180215e-002, 1.144907e-002, -2.029265e-002, 5.285410e-003, 8.618297e-004, -6.797810e-003, 8.387254e-004, -6.067019e-004, 1.854770e-002, 2.421229e-002, 7.899626e-002, 2.748671e-003, -9.945463e-003, -2.140002e-002, 2.331154e-003, 1.200338e-002, 6.527687e-004, 9.100087e-004, 7.987028e-004, 9.735645e-003, 2.664008e-002, 4.198487e-002, -3.241765e-003, -3.089075e-002, -6.733888e-003, 1.196056e-002, 8.046206e-003, 2.358394e-002, 2.358394e-002, 8.046206e-003, 1.196056e-002, -6.733888e-003, -3.089075e-002, 4.835066e-002, 7.472084e-002, -1.952930e-003, 6.623010e-002, 3.630992e-002, -5.743547e-003, 9.398535e-003, -7.075454e-002, 5.214811e-002, 3.057611e-002, -2.748199e-002, 3.348725e-002, 1.340087e-001, -2.848885e-002, -5.293479e-002, -3.302162e-002, -1.640138e-002, -5.290746e-003, 1.133960e-002, -2.158089e-002, -8.106713e-003, -2.830521e-002, 5.340334e-002, 1.259765e-001, 6.335310e-002, 2.951321e-004, -1.175217e-003, -5.674041e-003, -2.470284e-002, 1.924201e-003, 2.212061e-003, 9.189845e-002, -2.527603e-002, -8.195488e-002, 8.834683e-002, 3.042284e-002, 1.470124e-002, 1.309554e-002, -5.021481e-003, 2.056137e-003, 1.312542e-003, 1.305379e-002, 2.256257e-002, -6.330935e-002, 4.174696e-002, 8.794208e-002, 1.757641e-002, 1.235933e-002, 5.018653e-003, 1.009151e-003, 8.800679e-004, 1.239614e-002, 1.599801e-002, -2.050484e-003, 5.132494e-002, -1.538268e-002, 2.991769e-002, 4.231834e-002, 2.260636e-003, 1.179681e-003, 2.827929e-003, 4.178001e-004, 6.249909e-003, 8.046692e-003, -7.333323e-003, -2.327502e-004, -1.297484e-002, -2.571645e-003, -5.445720e-002, -4.086779e-003, -1.991361e-002, -8.220071e-003, -8.220071e-003, -1.991361e-002, -4.086779e-003, -5.445720e-002, -2.571645e-003, 8.040214e-003, 8.655917e-002, -5.438528e-002, 2.028269e-002, -1.358495e-002, -3.370964e-002, -1.752112e-002, -5.129014e-002, 5.772505e-002, 3.001324e-003, -4.440425e-002, -1.702778e-002, -7.726151e-002, -7.628897e-002, -4.433065e-002, -3.275407e-002, -1.883314e-002, -1.198337e-002, 3.294073e-002, 6.039569e-002, 2.841024e-002, 2.155911e-002, 4.030778e-002, -1.963995e-002, -5.403838e-002, -2.042305e-002, -2.371273e-002, -9.643072e-003, 1.671330e-002, 3.423181e-002, 2.968654e-003, -7.036789e-002, -1.850766e-002, 7.714894e-002, 1.068088e-002, -2.835026e-003, -2.705868e-002, -9.344196e-003, -2.790412e-003, 1.319608e-002, 1.670554e-002, -5.150712e-003, -3.502455e-003, 7.683415e-002, -2.346473e-002, 1.037296e-002, 2.796226e-005, -1.676708e-002, -1.258339e-002, -4.299791e-003, 6.415717e-003, 8.439735e-003, 1.273630e-002, 2.358861e-004, 1.345637e-002, 1.961092e-002, -1.508353e-002, 7.981618e-004, -7.997506e-004, -1.346056e-002, -5.213824e-003, -1.526569e-005, 3.782124e-003, 1.359905e-002, 1.504297e-002, 2.525586e-002, -5.438875e-003, 2.033002e-002, -2.944183e-002, -5.984265e-003, 7.847704e-003, 2.309665e-002, 2.309665e-002, 7.847704e-003, -5.984265e-003, -2.944183e-002, 2.033002e-002, 1.217960e-002, -2.981917e-002, -4.264798e-002, 4.173604e-002, -3.903492e-003, 9.075366e-003, 1.247037e-002, -8.304905e-004, -6.410267e-002, -1.177305e-002, 1.186230e-002, -8.444546e-003, 3.720317e-002, -1.818612e-002, 4.604628e-002, 5.066799e-002, 3.986272e-003, -6.873885e-003, -1.736126e-002, -3.746477e-002, -3.782794e-002, -8.057520e-002, 9.923860e-003, 4.935720e-003, 6.014224e-002, 3.833394e-002, -1.359663e-003, 4.269338e-003, -2.491480e-003, -7.394351e-003, -2.656385e-002, -2.332190e-002, -1.532380e-002, 4.707693e-002, 6.114624e-002, 9.724824e-003, 6.054486e-003, 6.301830e-003, -1.867067e-004, 6.583323e-003, -8.905114e-003, -1.743341e-002, -3.878240e-002, 1.620708e-002, -1.794533e-002, 2.911216e-002, 2.285536e-002, 1.129410e-002, 1.243092e-002, 1.086987e-002, -8.906086e-003, -8.547891e-004, -7.978342e-003, 1.252407e-002, 4.387916e-003, 8.141969e-003, 2.521780e-002, 1.656796e-002, 1.593077e-002, 1.114459e-002, 8.471808e-004, -6.691008e-003, -3.680531e-003, -8.103114e-004, -6.447677e-003, 1.496753e-002, 4.116443e-003, 1.605332e-004, 2.198523e-002, 2.198523e-002, 1.605332e-004, -9.414534e-002, -3.505452e-002, -2.627374e-002, 1.236088e-003, -3.928381e-003, -5.225054e-002, -4.084624e-003, -8.345848e-003, 3.278533e-003, 6.042214e-003, 1.023174e-002, -1.317218e-002, -1.263188e-002, -1.263188e-002, -1.317218e-002, -3.838034e-002, -2.902965e-003, 8.847234e-004, 4.773178e-003, 2.038984e-002, -3.775010e-002, -1.584516e-002, -8.907428e-003, 7.244149e-004, 5.293511e-003, -3.091888e-002, -1.822223e-002, 1.372004e-003, 1.372004e-003, -1.822223e-002, -1.291085e-001, 1.757340e-002, -2.157238e-003, -8.010247e-004, -8.486541e-003, -


© ISO/IEC 2004 — All rights reserved

Copyright International Organization for Standardization
Provided by IHS under license with ISO
No reproduction or networking permitted without license from IHS
Not for Resale

8.363762e-002, 4.897653e-003, 4.076972e-003, 4.547839e-003, -1.135430e-002, 4.519823e-002, -3.574204e-002, -3.221461e-002, -3.221461e-002, -3.574204e-002, -5.090471e-002, 2.410029e-002, 1.529709e-002, -1.657538e-002, 3.850192e-002, -3.314794e-002, 1.474937e-002, 5.626412e-003, 9.462116e-003, 1.958165e-002, -1.023628e-001, 3.314145e-003, -5.697897e-002, -5.697897e-002, 3.314145e-003, -1.034411e-001, -6.988317e-002, -1.407805e-002, -3.166542e-002, -2.290559e-002, -3.824669e-002, 5.699106e-003, -4.460059e-004, -1.763756e-003, -7.211708e-003, 1.091590e-001, 5.946807e-002, 2.526222e-002, 2.526222e-002, 5.946807e-002, -2.474973e-001, 6.031893e-003, 1.038321e-002, 8.012047e-003, 1.393507e-002, 3.413659e-002, 1.329025e-002, -4.223893e-003, -2.737288e-003, 7.896930e-002, -4.976664e-002, 4.150841e-002, 2.548157e-002, 2.548157e-002, 4.150841e-002, -2.508768e-001, -1.611107e-002, 2.026924e-004, 3.907951e-003, -3.099194e-002, 5.550036e-002, 6.839688e-002, 4.866757e-003, 8.858280e-003, 4.377778e-002, 3.224552e-002, 4.311297e-002, -4.504641e-003, -4.504641e-003, 4.311297e-002, -9.578477e-002, -4.206715e-002, -1.700362e-002, -1.904171e-002, -9.729373e-002, -2.723579e-002, -5.157706e-004, 1.070653e-002, 4.780094e-003, 1.437895e-002, 1.056276e-001, 5.785854e-002, 1.631144e-002, 1.631144e-002, 5.785854e-002, 7.359625e-002, 2.855471e-002, -4.362725e-003, 2.403223e-002, 5.385447e-002, 3.007462e-002, 9.514966e-003, 5.878959e-004, 2.685810e-003, 1.544787e-002, -8.206873e-002, 1.085731e-002, 1.268683e-002, 1.268683e-002, 1.085731e-002, -8.940602e-002, -3.128072e-002, -1.326458e-002, -3.451966e-003, 5.695698e-004, 1.605777e-002, -1.663601e-002, -8.779528e-004, 1.862455e-003, -1.657845e-002, 3.805902e-002, 7.004979e-003, 2.212150e-002, 2.212150e-002, 7.004979e-003, -1.018199e-001, 7.042496e-004, 2.963873e-003, -1.561043e-002, -1.635519e-002, 6.207991e-003, -1.375508e-003, 1.375346e-003, -3.626343e-003, -2.183739e-002, -4.548971e-002, 2.126127e-002, 3.320133e-002, 3.320133e-002, 2.126127e-002, 3.055353e-002, -6.753725e-003, 1.900885e-002, 2.598155e-003, 7.769423e-003, 1.858367e-002, 7.504284e-003, -4.739420e-003, -8.989907e-004, 6.353585e-003, 8.835118e-003, 6.239668e-002, 2.520112e-002, 2.520112e-002, 6.239668e-002, 3.164127e-002, -6.214927e-002, -1.974330e-002, -1.021914e-002, -4.543136e-002, 1.776967e-002, -2.713411e-002, -1.203672e-002, 1.926595e-003, -5.994775e-003, -4.536880e-002, 9.179506e-003, -7.715564e-005, -7.715564e-005, 9.179506e-003, 6.383915e-002, -3.538897e-003, -2.913658e-003, 5.772983e-003, -3.160214e-003, 2.927418e-002, -5.048220e-003, -3.096820e-003, 5.295130e-003, -6.501356e-003, -2.093950e-002, -2.138766e-002, -1.028762e-002, -1.028762e-002, -2.138766e-002, 3.967866e-002, 6.985351e-003, -2.340156e-003, -1.182990e-002, -2.241205e-002, 1.838052e-002, 1.684988e-002, 3.936370e-003, 3.061345e-004, 2.305908e-003, 2.293132e-002, 3.567145e-002, -1.339704e-002, -1.339704e-002, 3.567145e-002, 3.406722e-002, -1.469690e-002, 2.118383e-002, -7.157699e-003, -1.146251e-002, 2.762875e-002, 9.144101e-003, 7.286986e-003, -6.359327e-003, -2.432332e-002},
{-1.522994e-003, 7.499699e-004, -1.596782e-002, 4.025280e-003, -1.181800e-002, -5.097682e-003, -8.688552e-003, 1.340499e-002, -1.583616e-002, 1.559687e-002, -3.403084e-002, 7.650659e-002, -3.403084e-002, 1.559687e-002, -1.583616e-002, 1.340499e-002, -8.688552e-003, -5.097682e-003, -1.181800e-002, 4.025280e-003, -1.596782e-002, 7.499699e-004, -1.163656e-002, 5.120574e-004, 5.585216e-003, -9.458226e-003, 5.040612e-003, 4.415097e-002, 1.109864e-002, 1.438144e-002, 1.895861e-003, 4.443078e-002, 9.464518e-003, 2.148218e-002, 5.926215e-003, -2.144155e-002, -1.623617e-002, -1.617231e-002, -2.141544e-002, 2.766754e-002, 9.629557e-003, -1.340764e-003, 5.241894e-003, 1.540636e-002, -1.312061e-002, -9.643502e-003, 2.987583e-003, 1.337276e-002, -3.449203e-002, -2.950644e-002, -9.420580e-003, 3.743535e-002, -6.991949e-003, -6.269090e-002, 2.636284e-002, -4.171829e-002, -4.519851e-003, -4.647923e-002, 3.132979e-002, -1.852304e-002, -6.943786e-002, 4.344697e-003, 1.835190e-002, 7.894683e-003, -4.162713e-002, -6.851549e-003, -3.215332e-002, 1.980321e-002, 1.952646e-002, -3.470629e-003, -1.435884e-002, -1.650981e-003, -8.486762e-003, 2.458299e-002, 1.406330e-002, -2.425290e-004, 2.633711e-002, -1.214804e-002, -5.418284e-002, -2.560811e-002, -6.347469e-002, -2.813229e-002, -5.225490e-002, -6.531165e-002, 5.647114e-003, -9.989045e-003, -1.272085e-003, 1.656594e-002, 2.074332e-002, 1.611703e-002, 1.131177e-002, 9.797333e-003, -2.517820e-002, -1.057819e-002, -2.527249e-002, 2.585647e-002, -1.495789e-002, -8.295518e-003, -3.394386e-002, 7.680287e-003, 4.572844e-002, -1.235287e-002, 1.742380e-002, 2.554300e-002, 9.683552e-003, 2.861683e-002, 1.486546e-002, 2.948948e-002, 1.866353e-002, 5.406519e-003, 4.722040e-002, 8.740003e-003, -8.678960e-003, -1.611600e-002, -5.492365e-002, 7.658219e-003, -4.096588e-002, 2.371714e-002, 2.470092e-002, 3.895182e-002, -9.794101e-003, 5.149194e-003, -1.508231e-002, -1.348854e-002, 2.012240e-002, 1.504914e-002, -4.903429e-002, -2.895076e-002, 4.852471e-003, 2.057603e-002, -3.790167e-003, -1.310943e-002, 2.621051e-002, -2.692562e-002, -3.653973e-003, 1.092075e-002, -6.295138e-002, -8.061780e-003, -3.695195e-002, 1.773671e-003, 8.095916e-002, -4.666150e-002, -2.214518e-002, -1.195826e-002, 2.773132e-002, -1.571681e-003, -2.524638e-002, 6.968472e-002, -8.478985e-003, -1.975332e-002, -2.766538e-003, -4.221505e-002, -1.110020e-002, -4.991786e-002, -1.105171e-003, 3.465272e-002, 3.319083e-002, -2.409010e-003, -5.656835e-002, -1.444705e-003, -3.801475e-002, 3.318229e-003, -6.593965e-002, -5.027267e-002, 5.645614e-003, -2.418577e-002, -5.393862e-003, -1.494208e-002, -1.801958e-002, 2.539381e-002, -1.909594e-002, 3.155052e-002, -3.301976e-004, 6.822011e-003, 6.268968e-002, 1.847927e-002, 3.560941e-002, -3.039334e-002, -5.077563e-003, 6.843407e-002, -4.800910e-002, 4.176106e-002, -2.899099e-003, 3.111206e-002, -

© ISO/IEC 2004 — All rights reserved


Copyright International Organization for Standardization
Provided by IHS under license with ISO
No reproduction or networking permitted without license from IHS
Not for Resale

6.248584e-003, -1.327568e-002, -3.590528e-002, -2.227283e-002, -1.071863e-002, -2.484330e-002, -2.528572e-002, -4.820189e-002, 2.040692e-002, -2.088778e-002, 2.659323e-002, 1.316905e-002, 1.019178e-001, 1.279410e-002, -2.902343e-002, 1.858011e-002, 3.739908e-002, 5.964007e-002, 1.351389e-002, -4.618119e-002, -2.306968e-002, -5.924632e-002, -2.917725e-002, -4.332322e-002, -2.513731e-002, -3.995552e-002, -3.631911e-002, -1.509922e-002, -1.844104e-002, -3.738898e-002, -8.637348e-003, -3.408830e-002, 3.658869e-002, 5.797674e-002, 3.600027e-002, 5.766622e-002, 3.736830e-002, -7.012137e-003, 6.084141e-003, 5.267851e-002, -3.675965e-003, 1.917120e-002, -1.094990e-002, -4.141709e-002, -1.886639e-002, -2.138405e-002, -2.712633e-002, -2.510027e-002, -1.889102e-002, -2.682954e-002, 4.440564e-003, -1.610126e-002, 2.138024e-002, 4.890429e-002, -5.758594e-002, 3.144060e-002, 4.114386e-002, -5.494371e-002, -5.082406e-003, 2.185961e-002, -4.399923e-002, 6.264592e-002, 2.631915e-003, 2.071520e-003, 3.155353e-003, -1.121281e-002, -5.402897e-003, -2.873982e-002, -3.206364e-002, -1.542385e-002, -6.844139e-003, 9.641839e-004, -1.794140e-002, -3.046484e-004, -1.198165e-002, -2.133090e-003, 1.372892e-002, 8.872663e-002, 8.441562e-003, -1.474997e-003, -3.987979e-002, 4.144496e-002, -1.778657e-002, 1.724699e-002, -1.288019e-002, -1.138709e-002, -2.249431e-002, -2.347238e-002, -2.320194e-002, -1.955044e-002, -2.188464e-002, -1.942388e-002, -1.957408e-002, -1.226994e-002, -1.613191e-002, -1.034942e-002, -3.447121e-002, 1.492335e-002, 1.663446e-002, 2.710318e-002, 1.199243e-002, 2.205310e-002, 1.367377e-002, 1.101272e-002, -6.461036e-002, -9.771990e-003, 3.445344e-003, 3.928178e-003, 1.335336e-004, -1.920489e-002, -3.001133e-002, -2.513058e-002, -2.533936e-002, -1.793929e-002, -2.041607e-002, -2.267690e-002, -1.852496e-002, -3.056244e-002, -2.280995e-002, -1.508013e-002, -1.390808e-002, -1.435932e-002, -6.385106e-002, -6.898258e-002, 9.538148e-003, 1.193818e-002, -2.359904e-002, 1.363316e-002, 2.273734e-002, -2.324115e-002, -2.324115e-002, 2.273734e-002, 1.363316e-002, -2.359904e-002, 1.193818e-002, 1.736491e-002, -7.679263e-002, -1.384432e-002, 2.464820e-003, -8.302075e-002, -1.494233e-002, 1.898809e-002, 4.706636e-002, 5.667683e-002, -6.375119e-003, 3.925026e-002, 5.455876e-002, -2.191025e-002, 2.564763e-002, -5.542635e-002, -1.190432e-002, 6.118490e-004, 2.064191e-002, 3.484746e-002, 1.475103e-002, -5.752928e-002, -5.642158e-002, -2.511563e-001, -5.070910e-002, 5.070913e-004, -8.713875e-004, 1.162842e-002, -1.486278e-002, 6.600924e-003, 7.084810e-003, 1.949523e-002, 4.345602e-002, -9.734625e-002, -4.284422e-002, -7.095439e-002, -1.852481e-002, 2.885572e-002, -1.273217e-003, -1.861402e-002, 2.323041e-003, -4.270266e-003, 2.789049e-002, 4.003378e-002, -7.845915e-002, 2.858695e-002, 2.603639e-002, 5.270841e-004, 3.351820e-003, -1.480381e-002, -8.233020e-003, -2.822965e-003, 2.402736e-003, 1.263458e-002, 2.142201e-002, 3.471902e-002, -3.183913e-002, -4.117173e-002, -7.275807e-003, -1.140331e-002, -3.300531e-003, -1.263066e-002, -3.142390e-003, 1.394799e-003, -2.037745e-003, 1.474908e-002, 1.311079e-002, -1.211999e-002, 3.231574e-002, -9.836765e-003, -1.354141e-002, 3.259263e-002, 1.082126e-002, 1.082126e-002, 3.259263e-002, -1.354141e-002, -9.836765e-003, 3.231574e-002, 7.793490e-002, 1.965939e-002, -9.263316e-002, 1.817622e-003, 6.002872e-003, -1.026007e-002, -9.434343e-002, -1.146994e-001, 7.021860e-002, -8.764233e-003, -3.313180e-002, 5.034338e-002, -8.588639e-002, -6.628570e-002, 2.503826e-003, 2.524631e-002, 3.200593e-003, 1.310365e-002, 3.132351e-002, -6.189950e-003, -2.430964e-002, -4.102843e-002, -1.922310e-001, -1.383963e-001, 2.170820e-002, 1.057266e-002, 9.254624e-003, -7.530359e-004, 8.923095e-003, 1.182676e-002, -1.103320e-002, -1.598437e-003, -8.121567e-002, -1.198142e-002, -3.689914e-002, 3.539602e-002, 9.283607e-003, -4.593309e-003, -3.362124e-003, -8.122198e-003, -2.674803e-002, -3.677828e-004, 1.438684e-002, 3.119403e-002, 5.747169e-002, 5.491190e-002, 1.218764e-002, -2.675621e-003, -1.044915e-003, -5.711782e-003, -6.470480e-003, -1.417563e-002, -5.351700e-003, -3.991291e-003, 3.062429e-002, -2.008735e-002, 3.540161e-005, 6.578879e-003, -9.157291e-003, 1.459363e-004, -4.220404e-003, -6.495223e-003, -8.829894e-003, -1.465256e-002, 1.720890e-002, -1.628500e-002, -8.743889e-003, 3.227959e-003, 1.507498e-002, -1.020989e-002, 1.109167e-002, 1.428612e-002, 1.428612e-002, 1.109167e-002, -1.020989e-002, 1.507498e-002, 3.227959e-003, 2.139670e-002, 3.382719e-002, 6.123440e-002, 2.443703e-002, 3.834720e-002, 4.684606e-004, -1.345196e-002, 4.452735e-002, 3.346165e-002, -4.184620e-002, 4.157292e-002, 1.008844e-002, -5.136778e-002, 1.493404e-002, 2.344627e-002, 3.128226e-002, 8.586690e-004, 2.682232e-003, -2.329637e-002, -1.889039e-002, -5.399596e-003, -1.534091e-002, -1.752898e-002, 8.706922e-002, -2.462964e-002, -5.463095e-003, 1.306663e-002, 6.128473e-003, -1.532833e-002, -2.028487e-002, -2.277399e-002, 3.193904e-002, 1.047069e-001, 2.155044e-002, -1.359951e-002, -3.107145e-002, -2.564014e-002, -1.287723e-002, -1.081311e-002, -2.958265e-002, -5.447003e-003, -3.354378e-003, 1.312127e-002, 5.795347e-002, 9.331650e-004, 1.552586e-002, -2.646987e-002, -2.504959e-002, -1.760007e-002, -1.716296e-002, -2.323884e-002, -1.222314e-002, -6.926926e-003, 1.303650e-002, 4.192920e-003, -1.015847e-002, 4.219474e-002, -8.807961e-003, -2.385766e-002, -2.401019e-002, -8.672400e-003, -1.491894e-002, -2.176610e-003, 7.366291e-003, 8.473362e-003, 1.506289e-002, 9.802740e-003, -2.419920e-003, 2.339551e-002, 2.095675e-002, -1.363711e-002, -4.280425e-002, -4.280425e-002, -1.363711e-002, 2.095675e-002, 2.339551e-002, -2.419920e-003, 1.836243e-002, 1.335903e-003, -6.179055e-002, 5.165750e-003, 5.054282e-002, -4.556763e-003, -2.288969e-002, 1.639418e-002, -5.543368e-002, 1.599853e-002, 7.593962e-002, 7.776557e-002, -5.601102e-002, 3.271088e-002, 5.001857e-002, 1.547376e-002, 2.052937e-002, 1.674924e-002,


--`,,```,,,,````-`-`,,`,,`,`,,`---

© ISO/IEC 2004 — All rights reserved

Copyright International Organization for Standardization
Provided by IHS under license with ISO
No reproduction or networking permitted without license from IHS

Not for Resale

3.619451e-002, 5.392910e-002, 1.255021e-001, 6.530730e-002, 2.189569e-002, 7.526803e-002, 6.787556e-002, -4.006188e-003, 4.441413e-003, 2.729446e-003, 3.970418e-003, 1.914536e-002, 3.288817e-002, -4.958913e-003, 2.928619e-002, -3.070602e-002, 3.991078e-002, 1.118294e-002, 7.288252e-003, -4.264601e-003, 1.470267e-003, 1.798711e-003, 7.785487e-003, -1.069379e-002, -2.017443e-003, -7.717603e-002, -2.905803e-002, -2.723290e-002, 1.686350e-002, -8.476513e-003, -7.621352e-003, -6.720823e-003, -1.931847e-003, 2.943737e-003, -5.811507e-003, -3.841794e-002, -1.085953e-002, -2.556980e-002, 2.226612e-003, 1.411115e-002, 5.665817e-003, -1.476249e-003, -1.223440e-002, -1.648915e-003, -2.603718e-003, -1.996334e-002, -4.876334e-003, -3.418496e-002, -2.502453e-003, 1.096333e-003, -2.238478e-002, -2.238478e-002, 1.096333e-003, 7.493196e-002, 4.523784e-002, 1.551514e-002, 1.169836e-002, 1.832080e-002, 7.521109e-003, -9.465654e-003, 5.308072e-003, -3.378982e-003, -2.545249e-003, -2.691289e-002, 1.248386e-001, 4.352141e-002, 4.352141e-002, 1.248386e-001, 7.546516e-002, 7.517587e-002, 1.981864e-002, 1.584359e-002, 2.662750e-002, -4.338209e-003, 1.004946e-002, 5.229277e-003, 4.335086e-003, 1.317036e-002, -6.964834e-004, 4.219168e-002, 6.926063e-003, 6.926063e-003, 4.219168e-002, 4.321209e-002, 3.298896e-002, 1.440583e-002, 1.880572e-002, 5.971793e-002, 2.571525e-002, 9.927169e-003, 1.471162e-003, 6.281448e-003, 2.289521e-002, 3.245934e-002, 1.430745e-002, 3.628461e-003, 3.628461e-003, 1.430745e-002, -4.892307e-002, 1.323142e-002, -8.622490e-003, 2.772196e-004, 2.559055e-002, -2.658186e-002, 1.164242e-002, -7.316905e-003, -1.747280e-002, -4.459207e-004, -2.613985e-002, 3.525485e-002, 3.649834e-002, 3.649834e-002, 3.525485e-002, 1.607485e-001, 2.853888e-002, -2.872686e-002, 2.405360e-002, 3.387672e-002, 2.823576e-002, -4.025533e-003, -5.865472e-003, 1.705729e-003, 1.668816e-002, 6.509334e-002, 1.200142e-002, 3.049755e-002, 3.049755e-002, 1.200142e-002, -1.363422e-001, 1.452725e-002, 1.318412e-002, 1.479028e-002, -3.218442e-002, 3.721258e-002, 3.547224e-003, 2.368447e-003, 6.041353e-003, 5.435149e-002, -2.152245e-002, 3.169338e-002, 2.505492e-002, 2.505492e-002, 3.169338e-002, -8.861012e-002, -6.174754e-002, 2.999148e-003, -2.197161e-003, -2.798113e-002, 4.784762e-002, 4.424224e-002, 3.027759e-003, 1.673137e-003, 7.087140e-003, -2.236040e-002, -5.990671e-002, 1.526818e-002, 1.526818e-002, -5.990671e-002, 1.519841e-001, 2.386542e-002, 1.255242e-002, -3.894378e-002, 3.214544e-002, 3.386742e-002, 1.792736e-002, 1.976515e-003, 1.391844e-003, 6.484777e-003, 6.875070e-002, -5.340959e-003, -2.874830e-002, -2.874830e-002, -5.340959e-003, 6.069827e-003, -1.461671e-002, -7.842647e-003, -1.988270e-003, -3.071432e-003, -2.569952e-003, -1.224440e-002, -7.670032e-003, -8.161211e-003, -7.591088e-003, -4.621981e-002, 2.653884e-002, 9.398536e-003, 9.398536e-003, 2.653884e-002, 1.120856e-001, 1.183558e-002, 6.325093e-003, 9.858762e-003, 2.051246e-002, 1.911295e-002, 8.029088e-003, -2.098320e-003, -3.702706e-003, 1.304372e-002, -5.204129e-002, -2.305436e-002, -2.138362e-002, -2.138362e-002, -2.305436e-002, 1.328931e-001, 1.748705e-002, 5.797907e-003, 2.004584e-003, 2.011835e-002, 2.963714e-003, 5.149201e-003, 4.229706e-004, 2.298581e-003, -2.097619e-004, -3.803620e-003, 2.177935e-002, -3.368333e-002, -3.368333e-002, 2.177935e-002, 4.337708e-003, -2.209843e-003, 2.395997e-002, 6.052906e-003, -2.977223e-003, -9.598355e-003, -1.201303e-002, -6.747430e-003, -2.584220e-003, -8.710773e-003, -3.197524e-002, -5.645235e-002, 1.059682e-002, 1.059682e-002, -5.645235e-002, -2.894581e-002, -4.111086e-002, 1.598283e-002, -1.211925e-002, -5.893098e-002, 2.974426e-002, -2.957639e-002, -8.936302e-003, -9.132366e-003, -5.760103e-003, 7.004668e-004, -5.535882e-002, -1.505788e-002, -1.505788e-002, -5.535882e-002, -3.595620e-002, 1.514091e-002, 1.500789e-002, 8.742859e-003, 4.782324e-002, -1.391303e-002, 2.679821e-003, 4.982343e-003, 4.090539e-003, 1.029864e-002, 6.752781e-002, -3.477398e-002, 3.101970e-003, 3.101970e-003, -3.477398e-002, 1.927175e-002, 4.461894e-002, 2.168229e-002, 2.545886e-002, 2.897903e-002, -1.959859e-002, 2.680615e-002, 9.308769e-003, 6.920011e-003, 3.717290e-003, -1.880162e-003, -6.198976e-002, 7.512103e-003, 7.512103e-003, -6.198976e-002, -3.362939e-002, -3.100381e-002, 2.417660e-003, 1.510733e-002, 1.285092e-002, -1.976101e-002, -1.965075e-003, -1.673791e-002, 1.239139e-003, -2.042323e-002},
{-3.278664e-003, 7.988902e-004, -1.258402e-002, 8.369842e-003, 8.340156e-004, -9.367123e-003, 1.304357e-002, -1.630014e-003, -7.523576e-004, 1.884647e-002, -8.607151e-004, -1.061488e-002, -8.607151e-004, 1.884647e-002, -7.523576e-004, -1.630014e-003, 1.304357e-002, -9.367123e-003, 8.340156e-004, 8.369842e-003, -1.258402e-002, 7.988902e-004, 8.149845e-003, -2.463115e-003, -4.412968e-003, 2.199024e-003, 1.428957e-002, -1.469252e-002, 1.853423e-002, -4.143767e-003, 3.925751e-002, -1.498236e-002, 4.496798e-002, -2.939967e-002, 3.479019e-002, -2.202371e-002, 1.636110e-002, -4.402479e-002, 1.122973e-002, -3.305449e-002, 3.621547e-003, 2.838433e-002, -6.735342e-003, -2.312737e-002, 4.536823e-002, -7.041579e-003, -2.952214e-002, -3.604285e-002, 1.041809e-002, -6.970952e-003, 2.332286e-002, -1.010724e-002, 4.120361e-003, 2.518828e-002, 1.595689e-002, -8.398569e-003, -2.489318e-002, -2.325176e-002, -1.715895e-002, -2.640203e-003, -1.069458e-002, -2.713153e-002, -2.752953e-002, -9.258059e-004, -1.605419e-002, -1.278232e-002, -4.822994e-002, -2.836283e-002, -1.158310e-002, -5.273480e-002, -2.710950e-002, 3.691295e-003, -1.606084e-002, 3.990654e-002, -2.608893e-002, 1.652146e-002, 2.253725e-003, -4.965971e-002, -2.486434e-002, -5.592903e-003, -3.505484e-002, -2.884904e-002, -3.489515e-002, 1.275981e-002, -1.543139e-002, -2.747959e-002, -3.479447e-002, -4.034914e-002, -1.564190e-002, -8.970382e-003, 3.880549e-002, 1.538597e-003, 4.753496e-002, -1.170173e-002, -6.571661e-004, -3.332243e-002,

© ISO/IEC 2004 — All rights reserved


Copyright International Organization for Standardization
Provided by IHS under license with ISO
No reproduction or networking permitted without license from IHS
Not for Resale

1.393170e-003, 2.740114e-002, 9.250651e-002, 2.500054e-002, 2.803596e-002, 3.136926e-003, 2.020902e-002, 9.373828e-003, 3.909867e-002, -8.542130e-003, -2.450629e-002, -4.831627e-002, 1.610256e-002, -1.590081e-002, -6.310129e-003, 3.272462e-002, 2.724359e-003, -1.810459e-002, -2.881151e-002, 1.855609e-002, -2.047987e-002, -9.442957e-003, -2.744925e-002, 5.263429e-002, 4.643257e-002, -2.645045e-002, 1.127848e-002, 1.121865e-002, 3.199001e-002, -4.118884e-003, 5.779563e-002, 1.641507e-002, -8.694827e-002, -5.422136e-002, -1.040650e-002, 5.099560e-002, 1.126282e-002, 2.104271e-002, 2.416966e-002, 4.940270e-002, -4.438966e-002, -3.748310e-002, 1.169230e-002, 3.223324e-002, -3.254838e-003, 2.503841e-002, 3.673443e-002, 2.199162e-002, 6.107759e-002, 7.431207e-002, 2.800607e-003, 3.273789e-002, 2.603252e-002, -3.307330e-002, -5.180576e-002, -5.439547e-002, -5.019571e-002, 2.377050e-002, 3.521875e-002, -1.253822e-002, -1.424493e-002, -3.292626e-003, -2.349992e-002, -8.802123e-002, -3.735180e-002, -6.603296e-002, -1.612672e-002, 3.362262e-002, 1.285459e-002, 9.766720e-003, 1.121521e-002, 2.146809e-002, 7.933067e-003, -4.033418e-002, -3.141967e-002, -6.715952e-002, -3.743955e-002, -1.736929e-002, -3.770444e-003, -3.182492e-002, -5.989991e-002, -7.643126e-003, 5.386772e-002, 9.676330e-003, 2.894328e-002, -2.619249e-002, -9.196077e-003, -1.996726e-002, -4.255622e-003, -2.528314e-002, -1.728225e-002, -1.055700e-002, 1.072591e-002, -2.614014e-002, -5.690811e-002, -5.552805e-002, -5.909816e-002, 1.517016e-002, -1.880903e-002, -1.224966e-002, 3.168748e-002, -2.883568e-003, 5.544742e-002, -3.670128e-002, -1.734386e-002, 1.632521e-002, -2.008127e-002, 9.134484e-003, -5.868592e-003, -7.396270e-003, -1.530326e-002, -2.242383e-002, 2.045941e-003, -1.221913e-002, -1.319091e-002, -3.618620e-002, -1.224053e-002, -1.291252e-002, 5.263326e-002, -2.880304e-002, -2.064246e-002, 3.017254e-002, 4.432913e-002, -2.416324e-002, -5.036210e-003, 2.267896e-002, -3.861611e-002, 2.138490e-002, -1.416938e-002, -6.164436e-003, -8.362773e-003, -1.754372e-002, -5.986715e-003, -1.168806e-003, 1.537628e-002, -1.427004e-002, -1.670528e-002, -1.099794e-002, -8.333355e-003, -2.456620e-002, 2.810381e-002, -6.256203e-003, 9.103692e-003, -3.555262e-003, -1.548409e-002, 1.546502e-002, -1.495885e-002, -4.584699e-002, -5.909008e-002, -1.360198e-002, -1.706313e-003, -2.207733e-003, 3.939914e-004, -2.824972e-003, -1.870181e-003, -5.975075e-003, 4.323653e-003, -8.508481e-003, -1.688639e-003, -1.457461e-002, -3.499023e-003, -6.346179e-003, 1.868549e-002, -4.391288e-003, 4.996033e-002, 5.929885e-002, -1.314576e-002, -4.521205e-003, 3.001738e-002, -2.246355e-002, -8.985235e-002, -1.287980e-002, 3.650209e-004, -2.923798e-002, -1.972588e-002, -1.381585e-002, -5.317637e-003, -1.105822e-002, -9.856250e-003, -9.109510e-003, -9.920550e-003, -2.381386e-002, -3.211421e-003, -8.886854e-003, -2.412075e-003, 1.417175e-002, 2.758605e-002, 2.727233e-002, 1.450248e-002, -2.739991e-003, -4.659253e-002, -4.380348e-002, 5.135938e-003, -5.762891e-002, -1.635147e-002, -2.949932e-002, -2.218555e-002, -1.042827e-002, -1.382065e-002, -1.630629e-002, -2.549805e-003, -1.970360e-002, -1.069091e-002, -2.066183e-002, -1.685700e-002, -2.044146e-002, -2.332234e-002, -9.459078e-003, -6.667509e-003, 1.047235e-003, 1.866852e-002, 4.233889e-002, 1.630130e-002, -3.289220e-002, -5.073836e-002, 5.729121e-004, -3.524936e-002, 1.212329e-003, 1.212329e-003, -3.524936e-002, 5.729121e-004, -5.073836e-002, -3.289220e-002, -3.828457e-002, 2.933775e-003, -5.324112e-002, 1.596630e-002, 5.156198e-002, 3.806733e-002, 3.274685e-002, 2.140207e-002, 1.857039e-003, -3.400055e-003, 8.856549e-003, 2.447446e-002, -3.101993e-002, -2.786233e-003, -8.088176e-003, -1.326993e-002, 2.392395e-002, 1.749720e-002, 1.627142e-002, 1.898388e-002, 2.548390e-002, -5.849216e-003, -1.509192e-002, 1.416489e-002, -2.313317e-002, -1.605474e-002, 8.502106e-004, 5.381825e-003, 1.509395e-002, 1.218579e-002, 2.755058e-002, 4.346268e-002, -4.247482e-002, 9.478798e-002, -3.364461e-002, 1.777804e-002, 7.230417e-004, -2.934385e-002, -1.591722e-002, 6.335034e-003, 1.350750e-002, 2.968105e-002, 1.928774e-002, -4.926674e-003, -2.132306e-002, -3.776983e-002, 1.133318e-002, -1.511014e-002, -7.537840e-003, 1.039396e-003, 4.761908e-003, 1.146821e-002, 2.186901e-002, 5.858970e-003, -1.993586e-002, -2.465158e-002, -4.475069e-002, 2.638974e-003, -1.261030e-002, -2.904779e-003, -3.807847e-003, 2.033099e-003, 7.020187e-003, 8.141453e-003, 8.162025e-003, -3.737958e-002, -4.364546e-003, -2.073631e-002, -9.634121e-003, -9.710937e-003, -6.158075e-002, -3.530313e-002, -3.530313e-002, -6.158075e-002, -9.710937e-003, -9.634121e-003, -2.073631e-002, 5.929473e-002, 1.285339e-001, 4.738149e-002, 2.216116e-002, 3.997064e-002, 2.005229e-002, 3.528120e-002, 6.504877e-002, 6.525663e-002, 8.491159e-002, -3.603302e-002, -7.150959e-002, -1.716227e-001, -5.902712e-002, -2.467335e-002, 3.385848e-002, 2.125704e-002, 2.635349e-003, 3.808475e-002, 6.849513e-002, 3.505171e-002, 4.809260e-003, 7.126073e-002, -4.932325e-002, 4.545426e-002, 1.956798e-002, 1.677508e-002, 9.153031e-003, 2.870384e-002, 3.606223e-003, -2.763108e-002, -1.743954e-002, 1.402018e-001, -2.052267e-002, -1.962541e-003, 1.248356e-002, 1.484919e-002, 1.080203e-002, 5.952212e-003, 7.353283e-003, -3.060157e-002, -4.432568e-002, 4.661630e-002, -2.284169e-002, -8.377039e-002, -3.663968e-002, -1.627645e-004, 7.585321e-004, 3.842513e-003, 4.308952e-003, -1.036531e-002, -8.579425e-003, -1.975976e-002, 2.683052e-002, -4.766785e-002, -7.581950e-002, -4.460130e-002, -6.376293e-003, -3.332423e-003, 6.018975e-003, 1.213430e-003, -8.076638e-003, -2.153470e-003, -8.047433e-003, 1.387768e-002, -2.439321e-002, -1.638069e-002, 2.981133e-002, 1.843895e-002, -3.295875e-003, -7.016501e-003, -4.343887e-002, -4.343887e-002, -7.016501e-003, -3.295875e-003, 1.843895e-002, 2.981133e-002, 3.032954e-002, 8.399979e-003, 9.874134e-002, -5.880908e-002, -1.264345e-002, 1.001596e-002, 1.370202e-002,


© ISO/IEC 2004 — All rights reserved

Copyright International Organization for Standardization
Provided by IHS under license with ISO
No reproduction or networking permitted without license from IHS
Not for Resale

8.698383e-002, 1.094457e-002, 1.237284e-001, -2.965910e-002, -4.418040e-002, 8.617390e-002, 1.226438e-001, 5.303128e-002, 2.371414e-002, 1.619971e-002, 1.670046e-002, -1.065181e-002, 2.501938e-002, 7.725106e-002, -7.007947e-002, -4.056020e-003, 2.100618e-002, 2.765035e-002, 1.693749e-002, 2.651101e-002, 1.373543e-002, 1.862952e-002, 3.649598e-002, 3.532198e-002, -2.532056e-002, -3.283525e-002, -2.087750e-002, 1.251954e-002, 1.777896e-002, 2.243294e-005, 6.374376e-003, 8.857213e-003, -5.937796e-003, -3.767700e-003, -2.498691e-003, 3.713740e-002, 6.926294e-002, 1.854138e-002, 5.336578e-002, -3.253333e-003, -1.112655e-003, -2.730858e-005, -1.436295e-003, 6.815570e-003, 7.588849e-003, -3.121216e-003, 2.341862e-002, 2.485979e-002, 2.133500e-002, -4.138183e-003, 6.932179e-003, 6.729935e-003, -4.829180e-003, -3.694905e-003, 1.627338e-004, 3.214975e-004, -1.645609e-003, 2.989141e-003, 3.312855e-002, 1.165275e-003, 1.869199e-002, -1.970921e-002, -2.141661e-004, 8.354045e-003, -1.623466e-003, -1.623466e-003, 8.354045e-003, -2.141661e-004, -1.970921e-002, 1.869199e-002, -1.719433e-002, -1.755818e-002, 1.293364e-001, -6.830536e-002, 2.213218e-002, 4.841606e-003, -1.225496e-002, -8.047672e-003, -1.344787e-001, 1.181491e-002, 3.410784e-002, 5.787147e-002, 1.701706e-002, 7.201510e-002, 4.872270e-002, 2.473506e-002, 3.394887e-002, -2.695682e-003, 1.518106e-002, 2.259721e-002, 5.532302e-002, 1.618046e-001, -4.489827e-002, 5.476607e-002, -4.170331e-002, 2.763188e-003, 3.829324e-002, 3.622633e-002, -1.711468e-003, 2.863081e-003, -2.778259e-003, -2.271359e-002, -7.458643e-002, 5.342022e-002, 4.692833e-002, 1.998279e-002, -1.119571e-002, -1.007674e-002, 1.319740e-002, 4.475738e-003, -1.352440e-002, -1.209888e-002, -2.482476e-002, -1.684799e-002, 7.059734e-002, 1.386816e-002, 7.930732e-003, -9.100325e-003, -1.495650e-003, 7.179516e-003, -1.304336e-002, -8.092404e-003, -1.091240e-002, -2.070126e-002, 6.666033e-002, 4.219294e-002, 2.303957e-002, -1.381268e-002, -7.821265e-003, -3.407907e-003, 2.615171e-003, -4.172337e-003, -7.696045e-003, -1.482200e-002, 7.295368e-003, 3.892846e-002, -2.365895e-003, 7.275125e-002, 8.288858e-003, 8.288858e-003, 7.275125e-002, -2.429219e-002, -8.431967e-002, -7.927155e-003, 5.082486e-003, -6.276561e-003, -1.251221e-002, -1.715650e-002, -1.683167e-002, 4.389833e-003, 1.815802e-003, -3.928422e-002, 4.515976e-002, 1.900699e-002, 1.900699e-002, 4.515976e-002, 1.487117e-001, 7.940851e-002, 2.980341e-002, 2.173047e-002, 4.566246e-002, 9.781169e-002, 3.483197e-002, 9.500250e-003, 1.021294e-002, 2.231171e-002, 2.043884e-002, 9.152776e-002, 3.366359e-002, 3.366359e-002, 9.152776e-002, 1.094463e-001, 4.275692e-002, 2.119739e-002, 3.337924e-002, 6.650209e-002, 4.363588e-002, 2.121120e-002, 1.110501e-002, 1.189052e-002, 3.580249e-002, 1.124038e-002, 2.689898e-002, 7.394708e-003, 7.394708e-003, 2.689898e-002, 3.811506e-003, -2.344166e-002, 3.259986e-003, 1.718830e-002, 1.594426e-002, 1.641753e-002, -4.769091e-003, 1.449784e-003, -1.698633e-002, -1.202767e-002, -4.248931e-002, 9.196043e-002, 4.720545e-002, 4.720545e-002, 9.196043e-002, -7.268847e-003, 2.904585e-002, -1.227121e-004, -4.250170e-003, -9.161756e-003, 4.857838e-003, 9.088956e-003, -2.180542e-003, -8.673266e-004, 6.567912e-004, 1.004407e-001, 6.125151e-002, 2.857937e-002, 2.857937e-002, 6.125151e-002, 7.970715e-002, 3.937353e-002, 1.477162e-002, 4.623309e-003, -1.533229e-002, -4.699986e-002, -1.142622e-002, 3.958416e-003, 3.617832e-003, -1.372473e-003, -2.185608e-002, 4.927821e-002, 3.943731e-002, 3.943731e-002, 4.927821e-002, 7.440767e-002, -4.438629e-002, 1.548360e-002, 2.443977e-002, 2.522265e-002, -3.423372e-002, -6.979470e-003, 3.072436e-003, 5.620904e-004, 2.921192e-003, -1.418768e-002, 1.107701e-002, 1.482160e-002, 1.482160e-002, 1.107701e-002, 2.670846e-003, -1.627171e-002, 9.361031e-003, 9.785070e-003, 2.290826e-002, 9.764440e-003, 1.673627e-003, 4.193521e-003, -3.733418e-004, -1.222526e-002, 2.705010e-002, -8.420426e-002, 1.421831e-002, 1.421831e-002, -8.420426e-002, -3.677452e-002, -1.661388e-002, 3.186549e-003, -1.072646e-002, 3.546666e-003, -1.476148e-002, -5.215648e-003, 9.210288e-004, 6.562155e-003, -4.337765e-003, -1.186040e-001, 2.929659e-002, 2.279312e-003, 2.279312e-003, 2.929659e-002, -6.871784e-002, 2.434679e-002, 5.279102e-003, 1.507383e-002, 7.543701e-003, -1.909516e-002, -2.716116e-003, 4.704165e-003, 3.732130e-003, 2.146080e-002, -7.971986e-002, 1.147537e-002, 3.602835e-003, 3.602835e-003, 1.147537e-002, -7.643888e-002, 1.211811e-002, 1.701232e-002, 1.312171e-002, 1.770291e-002, -7.667396e-003, 2.413995e-002, -5.218147e-004, 1.052859e-003, -1.014716e-003, -3.777456e-002, -2.815469e-002, 4.319229e-002, 4.319229e-002, -2.815469e-002, -3.777836e-002, -1.337000e-002, 1.620442e-003, -1.125625e-003, -1.972717e-002, -2.335587e-002, -8.177904e-003, 2.723505e-003, -2.817782e-003, -1.104611e-002, 5.337717e-003, -5.445590e-002, -2.464029e-002, -2.464029e-002, -5.445590e-002, 6.273251e-002, 7.792471e-002, 2.354086e-002, 3.052040e-002, 4.728261e-002, 2.972180e-002, 4.553185e-003, 6.382345e-003, 1.090127e-003, 2.198409e-003, 6.983549e-002, -8.221210e-003, 4.154621e-005, 4.154621e-005, -8.221210e-003, 1.869337e-002, 3.344405e-004, -3.783262e-003, -1.109048e-002, -3.723106e-002, 2.053351e-003, -2.747329e-003, -2.747806e-003, -1.374802e-003, 9.097915e-003, 1.106522e-001, 5.159722e-002, 2.326582e-002, 2.326582e-002, 5.159722e-002, 8.864448e-002, -1.923607e-002, 7.923090e-003, 1.138524e-003, 1.175189e-002, 2.010221e-002, -7.681453e-003, -4.089231e-003, -3.965080e-003, -5.260472e-003, 8.007451e-003, 1.482685e-002, -3.129755e-002, -3.129755e-002, 1.482685e-002, 3.285631e-002, 6.816002e-002, 2.691349e-002, 5.286699e-003, -1.835487e-003, 2.451602e-002, -6.717407e-003, 7.285022e-003, -1.695686e-003, -2.199846e-002},

© ISO/IEC 2004 — All rights reserved


Copyright International Organization for Standardization
Provided by IHS under license with ISO
No reproduction or networking permitted without license from IHS
Not for Resale

{-1.917976e-003, -6.159013e-004, 6.151460e-003, -8.215512e-003, 1.312935e-002, 1.397175e-002, 5.915917e-003, 1.168981e-002, 8.458500e-003, 4.510920e-003, 7.399430e-004, -7.170386e-003, 7.399430e-004, 4.510920e-003, 8.458500e-003, 1.168981e-002, 5.915917e-003, 1.397175e-002, 1.312935e-002, -8.215512e-003, 6.151460e-003, -6.159013e-004, -1.648233e-002, 1.456752e-003, 1.357195e-002, -1.229339e-002, 5.949445e-003, 5.805070e-002, -1.581842e-002, 6.856000e-003, -3.839218e-002, -8.674300e-003, 9.912037e-003, -8.099662e-002, -2.592018e-003, -1.624001e-003, 4.391193e-002, -1.734216e-002, 2.073414e-002, 1.749855e-003, 7.022560e-004, -1.514216e-002, -1.697762e-005, 9.198966e-003, 4.861500e-002, 2.017335e-002, 1.780725e-002, 2.705820e-002, 1.265448e-002, -2.075495e-002, -1.969624e-003, -5.463728e-002, 1.395352e-002, -5.034971e-003, 1.709088e-003, -2.461273e-002, -3.403296e-002, -2.408556e-002, -1.604553e-002, -3.004886e-002, 2.108787e-002, -2.552499e-002, 2.786079e-002, 1.984030e-002, -9.244457e-003, -1.013544e-002, 2.673439e-002, 4.089308e-002, -1.770984e-002, 1.687603e-002, -2.889572e-002, -4.875380e-002, -1.526599e-002, -1.255741e-002, 5.347304e-003, -3.095868e-002, -6.942420e-003, -5.201660e-004, -3.510338e-003, -4.353597e-002, -4.778804e-002, 1.046660e-002, -5.361975e-002, 2.763573e-002, -4.490205e-002, -2.374359e-002, -2.198918e-002, -1.918169e-004, 5.855627e-002, 2.594230e-002, -2.357730e-002, -1.964495e-002, 3.011742e-002, 3.180807e-002, 3.201236e-002, 2.484696e-002, 2.398870e-002, -2.634238e-002, -9.945845e-002, 1.104960e-003, -5.664501e-002, 2.032331e-002, 4.131888e-002, 1.648227e-002, 4.368931e-003, 4.531509e-002, -3.840970e-002, 2.118180e-002, -1.828527e-002, -3.257295e-002, -1.179890e-003, -2.545456e-002, -3.058391e-002, -2.505993e-002, 1.819691e-002, 3.881859e-002, 7.345735e-003, 4.763676e-002, 7.069786e-003, -3.000136e-002, -1.906373e-002, 2.320977e-002, -3.864960e-003, -4.225203e-002, 3.012462e-002, 3.428825e-002, 3.818575e-002, -4.580766e-002, 1.061711e-002, 8.439945e-003, 2.946318e-002, 1.421806e-002, -5.489445e-002, 1.577227e-002, 4.199670e-003, -1.397423e-002, -2.124507e-002, -1.798869e-002, -1.242423e-003, 1.339371e-002, 4.392066e-002, 1.956040e-002, 2.484340e-002, -6.603346e-003, 2.063006e-002, -1.589023e-002, -3.373377e-003, 6.779740e-002, -4.167249e-002, 3.833431e-002, -3.059193e-002, -4.898863e-003, 4.269543e-002, -1.375120e-002, 4.676830e-002, -2.608773e-002, 1.583611e-002, 5.615036e-003, -2.398092e-002, 5.870511e-002, -1.478173e-002, 2.675600e-002, 5.339902e-002, 5.746203e-002, 3.598701e-002, -9.987152e-003, -2.074423e-002, 3.968097e-004, -1.579494e-002, -6.609832e-002, 1.827635e-002, 7.086963e-002, 6.919259e-003, -1.289897e-002, 4.279044e-004, 4.107400e-002, 5.783302e-004, 2.634722e-002, -4.752650e-002, 1.199343e-002, 8.363788e-003, 7.467076e-002, -2.166228e-002, -3.726571e-002, 4.282775e-003, 3.890185e-003, 2.302648e-002, 1.212093e-002, 2.610420e-002, 1.811345e-002, 1.622094e-002, 3.607807e-002, 3.234524e-002, -1.054378e-002, -1.060852e-002, -3.331314e-002, 4.057153e-003, 2.895706e-002, -6.704845e-002, 9.354650e-002, -2.770039e-003, -8.003702e-002, 1.173273e-002, 8.284697e-003, 7.630261e-002, 3.539938e-002, 8.228504e-003, 5.729135e-002, 4.156500e-003, 1.069548e-002, 6.592379e-003, 1.514757e-002, 1.042976e-002, -7.604565e-003, 7.283117e-003, -4.391920e-002, -2.932779e-002, -1.791939e-002, 1.335734e-002, 5.760119e-003, 2.483723e-002, 3.836227e-002, -8.749071e-002, 1.202406e-002, -2.294113e-002, -1.224203e-002, -1.736221e-002, 8.772840e-004, 2.229892e-002, 1.646555e-002, 2.564347e-002, 1.642693e-002, 1.871181e-002, 6.021826e-003, -3.822740e-003, -4.537572e-002, -3.949899e-002, -1.040132e-001, 4.739565e-003, 3.708156e-002, -2.422291e-002, -1.878281e-002, 5.809711e-002, 1.399651e-002, 2.295237e-002, -2.762296e-002, 2.152555e-002, -2.076225e-002, -1.465250e-002, -6.959438e-003, -1.342801e-002, 5.337834e-003, 1.699518e-002, 9.151645e-003, 3.640208e-003, -5.113059e-003, -3.288575e-003, -3.626702e-002, -3.795806e-002, -4.413155e-002, 4.947678e-002, -7.857764e-003, 9.487255e-002, 7.714558e-002, 4.751046e-002, 1.928714e-002, -8.957948e-003, 2.015130e-002, -1.702403e-003, -4.424096e-002, -2.332061e-002, -9.038517e-003, 8.024347e-003, 2.016646e-003, 1.263048e-002, -8.511360e-004, 1.111502e-003, -9.996217e-003, -1.638680e-002, -2.855966e-002, -4.428671e-002, -2.378000e-002, -2.295197e-002, 9.074211e-003, -6.630077e-002, -5.239284e-002, 1.213433e-002, -4.583841e-003, 3.469200e-002, -8.890112e-004, 7.189351e-004, -2.085160e-002, -1.308025e-002, 2.960827e-003, 1.514022e-002, -9.231243e-003, 9.905969e-003, -8.728229e-003, -1.034555e-002, -1.499478e-002, -2.915885e-002, -3.701193e-002, -5.250892e-002, -3.332218e-002, -1.764045e-002, -6.065939e-002, 7.275673e-002, -5.323105e-003, -1.960306e-002, -3.549407e-003, 1.144935e-002, 1.587037e-002, 2.122317e-002, 2.730918e-002, 2.730918e-002, 2.122317e-002, 1.587037e-002, 1.144935e-002, -3.549407e-003, 1.613367e-002, -1.676223e-002, -4.292422e-002, 4.416543e-003, 2.285860e-002, 2.282794e-002, 4.150101e-002, 8.466883e-002, 8.667126e-002, 4.388442e-002, -1.349709e-001, 2.740375e-002, -1.789916e-002, 1.159079e-002, -1.939451e-002, -4.763506e-004, -1.321892e-002, -2.839179e-003, -1.068518e-002, -2.313012e-002, -9.588650e-002, -1.101312e-002, 2.512513e-002, -4.236403e-002, 7.249933e-002, -1.550060e-002, -2.175103e-002, -7.703549e-003, 3.493948e-004, -5.680389e-003, 1.207688e-002, 5.042322e-002, -2.838635e-002, -9.807674e-002, 8.466553e-003, 4.873962e-002, -4.005138e-004, -2.261238e-002, 3.818311e-003, 1.936452e-003, 3.177136e-003, 1.494112e-002, 1.668671e-002, -4.322132e-002, 1.691706e-003, -5.689656e-002, -1.310507e-002, 5.304752e-003, 1.224142e-002, 8.292192e-003, 2.045226e-003, 3.130872e-003, -1.832699e-003, -1.289394e-002, -7.018764e-003, -1.196828e-002, -1.807141e-002, -1.722846e-002, -7.855849e-003, 6.328085e-003, 3.776161e-005, -1.441510e-003, 9.660018e-004, -1.130318e-002, 6.402065e-003, -


--`,,```,,,,````-`-`,,`,,`,`,,`---

© ISO/IEC 2004 — All rights reserved

Copyright International Organization for Standardization
Provided by IHS under license with ISO
No reproduction or networking permitted without license from IHS

Not for Resale

3.594811e-002, 1.498232e-002, 5.757960e-003, -3.865904e-002, 1.794018e-002, 4.200074e-003, -7.727905e-003, -7.727905e-003, 4.200074e-003, 1.794018e-002, -3.865904e-002, 5.757960e-003, -4.154266e-002, -5.157420e-002, 5.535235e-002, 5.074530e-003, 3.296915e-002, 3.584432e-002, 1.407686e-002, -5.556924e-004, -3.569598e-002, -8.381038e-002, 4.634759e-002, 2.823545e-002, 4.514032e-003, -5.602276e-002, -3.144195e-002, 1.534032e-002, 4.692914e-004, -4.712015e-002, -4.463684e-002, -2.260362e-002, -9.426338e-003, 2.685784e-002, 7.369662e-002, 3.979243e-002, 4.036812e-002, 2.496299e-003, 1.125123e-002, 1.242863e-002, 1.252886e-002, -3.525964e-002, -6.838863e-002, 2.510150e-002, -3.101335e-002, -6.656664e-002, -1.750970e-002, 4.583772e-003, 8.789406e-003, 6.362090e-003, 1.495632e-003, 5.806126e-003, -5.917321e-003, -2.702101e-002, 2.610615e-002, -4.236463e-003, 3.998149e-002, 1.649207e-002, -6.258738e-003, 5.190466e-003, 5.257620e-003, 5.539703e-003, -5.968738e-003, -1.611451e-002, -4.114878e-002, -2.013978e-002, -3.164269e-002, -4.585928e-003, -1.452446e-002, 9.967726e-003, -6.808577e-004, 4.497319e-003, 5.016109e-003, -7.975506e-003, -1.375750e-002, -2.121984e-002, -1.820692e-002, -4.725031e-002, 1.532215e-002, 2.466434e-002, -1.626212e-002, -4.702133e-003, -7.417652e-003, -1.993643e-002, -1.993643e-002, -7.417652e-003, -4.702133e-003, -1.626212e-002, 2.466434e-002, -1.052983e-001, -1.410035e-002, 6.998826e-002, 9.562840e-002, 6.688752e-003, 9.658587e-003, 8.976416e-003, 1.189888e-002, -2.566903e-002, -7.378930e-002, -1.056433e-002, 1.269485e-001, 4.990919e-002, 9.928675e-002, 4.877702e-002, 4.250989e-002, 3.937730e-004, -2.593209e-002, -5.088746e-002, -7.195089e-003, -3.911840e-002, 8.110704e-002, 9.339705e-002, -7.713672e-002, 2.011612e-002, 3.713701e-002, 3.861489e-002, 1.216301e-002, 2.474266e-004, 1.604590e-002, 6.483788e-002, 2.746175e-002, -8.729792e-002, 5.214989e-002, -2.891965e-003, -8.703868e-003, 8.897771e-003, 2.892688e-002, 2.846517e-002, 1.176705e-002, 4.389837e-003, -6.420743e-004, -9.937974e-003, 7.220955e-003, 3.714908e-002, -5.355883e-003, -2.002154e-002, -2.677104e-003, 8.665124e-003, 2.047464e-002, 1.354968e-002, 1.178214e-002, 8.036508e-003, 2.987960e-003, 7.744378e-003, 1.021009e-001, -1.471007e-002, -2.724850e-002, -6.874253e-003, 3.075402e-005, 7.031941e-003, 8.537467e-003, 9.511786e-003, 1.624366e-003, 7.805978e-003, 2.239758e-003, -1.261938e-002, 1.986675e-002, -5.139325e-003, -2.611504e-003, 1.716497e-002, 4.177547e-002, 4.177547e-002, 1.716497e-002, -2.611504e-003, -5.139325e-003, 1.986675e-002, -1.155314e-001, 3.392482e-002, -5.831585e-002, -3.424008e-002, -1.765344e-002, 2.175510e-002, 7.716962e-003, 2.123690e-002, 5.608830e-002, 8.477175e-002, 2.678911e-002, -2.135771e-002, -4.218149e-002, -2.710557e-002, 4.249654e-002, -2.887978e-002, -4.309524e-002, 3.834293e-002, 6.362308e-002, 7.945271e-002, 7.448854e-002, -5.208481e-002, 1.758046e-002, -2.590633e-002, 2.067577e-002, 1.801596e-002, 1.589591e-002, -2.411855e-003, 1.145365e-002, 3.516592e-002, 4.799056e-002, 5.944105e-002, -5.970250e-002, -8.350643e-003, -3.521117e-003, -1.183973e-002, 1.816913e-003, 1.488454e-002, 1.444151e-003, 7.860283e-003, 1.972846e-002, 1.299324e-002, -1.581559e-002, 5.123316e-002, 2.215333e-002, 1.655609e-003, 2.068908e-002, -3.615456e-003, 2.118584e-003, 9.662045e-003, 9.295516e-003, -8.173542e-004, -1.134773e-002, 3.157095e-003, -1.038204e-002, 5.896504e-002, 7.014080e-003, 1.488361e-002, 7.995029e-003, 5.368482e-003, 2.549167e-003, -1.117430e-003, -1.224742e-002, -2.648764e-002, -5.241673e-003, 1.710590e-002, -1.216398e-002, -4.571298e-004, 2.710734e-002, 2.710734e-002, -4.571298e-004, 2.582945e-002, -7.767012e-002, -2.971771e-002, 1.377864e-002, -1.409916e-002, 1.632770e-002, 3.136831e-003, 4.613697e-003, 6.028416e-003, -1.362350e-002, 7.919166e-002, -9.676856e-002, -2.687409e-002, -2.687409e-002, -9.676856e-002, -1.037804e-001, -3.657716e-002, -6.355396e-004, 3.706050e-003, -2.855064e-003, -3.521439e-002, 5.060755e-003, -3.043265e-003, 1.582479e-003, -8.325634e-003, -2.919511e-002, -1.869630e-002, -8.624902e-003, -8.624902e-003, -1.869630e-002, 7.532513e-002, 2.418662e-002, 8.229955e-003, 1.602718e-002, 5.536848e-002, 1.790838e-002, 6.019631e-003, 8.616751e-004, 6.348274e-003, 2.918800e-002, -1.011921e-001, 3.072634e-002, 1.062557e-001, 1.062557e-001, 3.072634e-002, -8.372887e-003, -1.497891e-002, 4.834868e-003, -2.844493e-002, -1.148339e-001, 1.814527e-002, -9.547913e-003, 3.153373e-003, -1.615086e-002, -9.757639e-003, 2.301438e-002, -1.240565e-002, -2.110661e-002, -2.110661e-002, -1.240565e-002, -4.248985e-002, 1.486613e-002, 2.933270e-003, -1.047289e-002, -2.284210e-002, -7.695107e-003, 8.336799e-003, -4.505197e-003, 1.469296e-003, -3.985450e-003, -1.096451e-001, -1.113130e-002, -6.788264e-004, -6.788264e-004, -1.113130e-002, 3.946369e-003, -5.974295e-003, -2.027055e-003, 1.111574e-003, -5.063977e-002, -2.368117e-002, 1.761797e-002, -2.706018e-003, -6.428376e-003, 3.609502e-003, 8.807494e-002, -1.367598e-002, -4.418570e-003, -4.418570e-003, -1.367598e-002, -4.936532e-002, -8.742164e-003, -1.016513e-002, 6.586242e-004, 6.751903e-004, -5.343912e-002, 2.412207e-003, -2.452283e-003, -8.786101e-003, -2.317314e-003, 5.729454e-002, 3.037778e-002, -2.688961e-002, -2.688961e-002, 3.037778e-002, -8.565384e-002, -1.495197e-002, -4.191914e-003, -2.234581e-003, -2.665648e-002, -2.546565e-002, -1.031762e-002, 5.968287e-003, -6.617856e-003, 2.079137e-003, -1.920103e-003, -4.118005e-002, -1.538581e-002, -1.538581e-002, -4.118005e-002, 1.364559e-001, 7.584459e-002, 3.016362e-002, -2.003624e-002, 5.019529e-002, 4.595766e-002, 3.120638e-002, 1.902069e-002, 1.493070e-002, 1.673068e-002, -2.762141e-002, 6.619562e-002, -3.191482e-003, -3.191482e-003, 6.619562e-002, -4.219407e-002, 3.488094e-002, 3.449655e-003, 9.902495e-003, -4.012395e-004, 5.018748e-003, -3.600454e-003, 2.338664e-003, 3.389442e-004, -1.046614e-002, -1.494274e-001, -1.391670e-002, -

© ISO/IEC 2004 — All rights reserved


Copyright International Organization for Standardization
Provided by IHS under license with ISO
No reproduction or networking permitted without license from IHS
Not for Resale

3.027811e-002, -3.027811e-002, -1.391670e-002, -7.734901e-002, -2.496970e-003, 9.228331e-003, -1.604757e-003, 2.700236e-002, -8.399076e-003, -4.804880e-003, 7.233336e-004, -5.420149e-003, 3.205450e-003, 4.730350e-002, -6.304163e-002, -4.685315e-003, -4.685315e-003, -6.304163e-002, 1.166383e-001, 3.952757e-002, -2.607712e-002, 2.180718e-002, 5.274576e-002, 3.916691e-002, 9.218865e-003, 1.164182e-002, 1.305626e-002, 2.550077e-002, -3.244003e-002, 2.352732e-002, 2.359495e-002, 2.359495e-002, 2.352732e-002, -1.051521e-001, -1.194877e-002, 1.573743e-002, -2.443086e-002, -3.376288e-002, -1.576091e-002, -3.676067e-002, 1.289338e-002, 3.693526e-003, 3.728930e-003, 7.730370e-002, 2.834880e-002, 7.895138e-003, 7.895138e-003, 2.834880e-002, 6.413858e-002, -4.610491e-003, -5.022474e-003, -1.703204e-002, -1.731471e-002, 1.080692e-002, 5.056494e-004, -3.414326e-003, -3.654170e-003, -4.871830e-003, 1.260278e-001, -3.992479e-002, -2.739179e-002, -2.739179e-002, -3.992479e-002, -5.846304e-002, -3.065052e-002, -6.874418e-003, -2.516027e-003, -1.306288e-002, -1.564325e-002, -7.349539e-003, -9.347287e-004, -1.067406e-003, -3.805235e-003, -3.652327e-002, -1.189584e-002, 2.841960e-002, 2.841960e-002, -1.189584e-002, 2.389587e-002, -2.905236e-002, -1.734612e-002, 3.039583e-002, 3.009603e-002, 2.157367e-002, 8.328641e-004, -2.003808e-003, 1.366096e-002, -1.929015e-002},
{1.759349e-003, 9.361074e-005, 4.423628e-003, -1.843005e-002, 5.176883e-003, 8.075881e-003, 1.019032e-002, 4.205784e-003, 7.171843e-003, 1.260023e-002, -7.979328e-003, 7.103574e-003, -7.979328e-003, 1.260023e-002, 7.171843e-003, 4.205784e-003, 1.019032e-002, 8.075881e-003, 5.176883e-003, -1.843005e-002, 4.423628e-003, 9.361074e-005, 3.092995e-002, 4.367289e-003, 5.402862e-003, -1.790079e-003, -1.796024e-003, 1.816290e-002, -1.559804e-002, -1.167940e-002, -3.406014e-003, 2.502060e-002, -4.777069e-003, -2.456973e-003, 2.574004e-002, -1.840739e-002, 6.615658e-004, 8.526109e-003, 6.121418e-003, 2.468637e-002, 1.131094e-002, -1.715871e-002, -7.805937e-003, -1.077216e-003, 4.822807e-002, 1.505367e-002, 5.146056e-004, 2.311462e-003, 1.711264e-002, 2.077606e-002, 1.760971e-002, 7.559972e-002, -1.643429e-002, 3.376260e-002, -2.632585e-002, -1.155697e-002, -8.438467e-002, 4.202135e-002, -1.754606e-002, -4.023666e-002, -2.624484e-002, -2.548166e-002, -2.001581e-003, -4.240756e-003, -3.887466e-003, 1.608011e-002, 9.332211e-004, -6.598431e-003, 7.229994e-004, -1.476533e-002, 2.696159e-002, 7.457459e-003, 3.811559e-003, 1.271775e-002, -3.447072e-002, -1.182803e-002, 3.135633e-002, 1.320019e-002, -5.800896e-002, -5.499389e-003, -2.704935e-002, -6.497112e-003, -1.135097e-002, 1.026930e-002, 3.018657e-002, -1.969121e-002, 1.941684e-002, 7.944646e-003, -2.266667e-002, -2.150214e-002, -3.583710e-002, -3.902593e-002, -1.648929e-002, -2.567888e-002, 1.255314e-003, -2.840741e-002, -3.844920e-003, -7.179402e-002, -3.910629e-002, -5.091460e-002, -1.325125e-003, -6.241310e-002, -3.775234e-002, -4.681015e-002, -5.550316e-002, -3.747340e-002, -1.991990e-002, 3.135799e-003, -3.567810e-003, -2.200181e-002, -2.628360e-002, 3.949254e-002, -1.969352e-003, 1.088556e-002, -7.250533e-003, -7.048409e-002, -3.393595e-002, 1.685192e-002, -6.959503e-002, -6.126514e-003, -2.456210e-002, 6.854163e-003, 1.189842e-002, 4.780787e-003, -6.200556e-002, -2.789290e-002, -5.771850e-002, -2.971954e-002, -3.314545e-002, 4.207723e-004, -1.647127e-002, -1.744968e-002, 1.716349e-002, 1.227610e-002, -4.527299e-003, -2.629669e-002, 2.109416e-002, 1.832510e-002, -3.196316e-003, -3.389506e-002, -9.882863e-003, -1.477978e-004, -4.461651e-002, 7.137061e-003, 8.146745e-003, -3.466913e-002, -4.261402e-002, 4.202039e-002, 1.483398e-003, 9.108534e-003, -5.320174e-002, -3.896693e-004, -1.148525e-002, 2.755692e-002, 5.962483e-002, 1.806731e-002, 1.225850e-002, 1.893606e-002, 3.485639e-002, -5.539605e-002, -5.109011e-002, -8.371749e-002, -7.973695e-002, -4.837277e-002, -1.849757e-002, -3.271261e-002, 1.246279e-002, 8.392091e-003, 7.903690e-003, -8.953206e-002, -6.481134e-002, -4.057453e-002, -8.737116e-003, -1.366923e-002, -3.487773e-002, -3.122625e-002, 2.650287e-002, 3.977148e-002, -1.915147e-002, 2.673374e-002, 1.134645e-002, 3.418309e-002, 5.872384e-002, -6.133390e-003, -3.522519e-002, -6.020263e-002, -6.714070e-002, -2.484861e-002, -5.542481e-002, -4.682885e-002, -1.554073e-002, 2.576330e-003, -3.378878e-002, 3.851416e-003, -2.105349e-002, 1.110954e-002, 2.203073e-003, 1.865760e-002, -3.487375e-002, 1.097521e-002, -2.458535e-002, 3.492257e-002, 3.255937e-002, 5.742696e-002, 4.764659e-002, -7.945865e-003, -4.952865e-002, -4.048029e-002, -1.709175e-002, -4.517256e-002, -5.093711e-002, -3.034445e-002, -3.267051e-002, -6.105174e-003, 2.452299e-002, 2.262238e-002, 6.744061e-002, -1.077930e-002, -4.274978e-002, 1.276754e-002, -2.933285e-002, 2.882844e-002, 4.865849e-002, -1.476285e-002, -4.388607e-002, 5.070693e-002, -4.213231e-004, 3.278512e-003, 4.509507e-003, 3.077905e-002, -8.447094e-003, -1.326584e-002, -1.497266e-002, -1.183782e-002, 2.199773e-002, 3.210046e-002, 3.268390e-002, 8.805392e-002, -1.136376e-003, -1.017974e-002, 1.805847e-002, 3.172637e-002, 1.652602e-002, -2.357074e-002, -5.850695e-002, -6.174687e-003, 3.995911e-003, -1.076231e-002, 3.648241e-002, 5.126328e-002, 2.046179e-002, 6.841769e-003, -1.177266e-002, -1.269081e-002, 7.688242e-003, 1.925522e-003, -1.771068e-002, 2.047772e-002, 2.769127e-002, 4.725421e-002, -4.010044e-003, 3.832318e-003, 7.327296e-002, -2.057319e-002, 2.671157e-002, -2.852333e-002, 5.207714e-002, -4.242061e-002, 2.364422e-003, 4.348950e-002, 5.171088e-002, 3.098806e-002, 1.794881e-002, 1.466327e-003, -5.985934e-004, -6.565521e-003, 8.691637e-003, 1.882431e-002, 1.612923e-002, 1.293852e-002, -1.506870e-002, -8.368480e-004, -2.567852e-002, 1.202422e-002, 2.538346e-003, 1.170583e-002, 5.583959e-002, 2.129262e-002, -5.747483e-002, 3.490367e-002, -3.682791e-002, 3.301868e-002, 2.481740e-002, 9.850312e-003, 2.662797e-003, 5.376009e-003, -


© ISO/IEC 2004 — All rights reserved

Copyright International Organization for Standardization
Provided by IHS under license with ISO
No reproduction or networking permitted without license from IHS
Not for Resale

4.864763e-003, -2.675525e-003, -5.123870e-004, -2.558851e-003, 9.495822e-003, 1.541135e-002, 2.321874e-002, 2.491566e-002, -1.100220e-002, 1.533824e-002, -3.920642e-002, -8.907589e-002, -8.734700e-003, -1.949149e-003, -2.357542e-002, -8.378944e-003, 5.254731e-003, -2.374384e-003, -2.374384e-003, 5.254731e-003, -8.378944e-003, -2.357542e-002, -1.949149e-003, -5.869572e-002, 2.092223e-002, 5.744238e-002, -4.128355e-002, -6.916998e-002, -5.381910e-002, -1.157609e-002, -7.254791e-003, 4.474986e-002, -3.925726e-002, -5.481589e-002, -4.324220e-002, 1.039103e-001, -5.146595e-002, -2.954752e-002, 1.623314e-002, 3.456052e-002, 2.780603e-002, 5.638728e-003, -1.239512e-002, -5.248121e-003, -1.838210e-002, 1.178052e-002, 1.833577e-002, -2.038067e-003, -6.593028e-002, -7.499849e-002, -4.358354e-002, -3.114833e-003, -2.110197e-002, -1.198971e-002, -3.877577e-002, 7.077814e-002, 5.342896e-003, -6.345301e-002, 1.252456e-002, -1.414307e-003, -4.490327e-002, -4.848438e-002, -5.837562e-003, -1.170317e-002, -1.276972e-002, -3.371135e-002, -1.026865e-001, -4.943727e-002, -3.560705e-002, -1.482683e-002, 4.226649e-003, -1.416872e-002, -1.653118e-002, -3.961972e-003, -1.164466e-002, -8.143440e-003, -1.385417e-002, -7.859732e-002, 2.079056e-002, 3.165038e-002, -1.395854e-002, 2.518302e-002, 4.324664e-003, -4.289164e-003, -4.763871e-003, -6.782577e-003, -1.116770e-002, -1.673071e-002, 1.973656e-002, 1.941442e-002, -3.146150e-002, -2.623265e-002, -8.542043e-004, -6.392385e-003, 2.798527e-002, 2.798527e-002, -6.392385e-003, -8.542043e-004, -2.623265e-002, -3.146150e-002, -3.289871e-002, 2.305596e-002, 5.182690e-002, 4.332864e-002, 1.179579e-002, 1.120369e-002, -6.908518e-002, -5.947270e-002, -6.553619e-002, -1.152660e-002, 1.587710e-003, 4.785574e-002, 1.863765e-002, -4.298266e-002, 3.186194e-002, -7.075234e-003, 5.525756e-003, -2.355075e-002, -3.188266e-002, -6.045518e-002, 1.173760e-002, 5.008662e-002, -1.431751e-001, 8.377055e-002, -6.580981e-002, -1.071229e-002, -3.300596e-003, -1.014563e-002, -2.446907e-002, -4.641420e-002, -1.036002e-002, 4.517448e-002, -8.286101e-002, -2.361702e-002, -1.104251e-001, -5.289130e-003, -2.114109e-002, -1.118653e-002, -7.844306e-003, -3.629606e-002, -4.304148e-002, -9.620835e-003, 9.838952e-003, -3.392088e-002, -3.924271e-002, -8.024468e-002, 1.613454e-003, -1.052907e-002, -4.682894e-003, -8.401433e-003, -1.040671e-002, 6.638180e-003, 2.796104e-002, 4.201854e-003, 2.840269e-004, 4.814435e-002, 1.008510e-002, -1.203192e-002, -2.456390e-003, -4.878401e-003, -1.075975e-003, 3.937646e-003, 7.648988e-003, 2.767189e-003, -6.756400e-003, 2.529906e-002, 1.030434e-002, -1.335054e-002, -9.267358e-003, -1.298337e-003, -7.206243e-003, 1.090035e-002, 1.090035e-002, -7.206243e-003, -1.298337e-003, -9.267358e-003, -1.335054e-002, -1.952059e-002, -1.903422e-002, -8.210740e-002, -7.133870e-002, -1.237880e-002, 5.045532e-003, -1.090946e-003, 3.400026e-002, 1.159949e-001, 1.037770e-001, 3.714941e-002, 1.275259e-002, -4.100909e-002, -3.948482e-002, 3.133709e-002, -1.339866e-002, 9.740656e-003, 2.469006e-002, 2.344295e-002, 4.979612e-002, -5.021766e-003, 2.284504e-002, -1.731968e-002, 3.571495e-002, -1.996257e-002, -4.792693e-003, -1.558506e-002, -6.722470e-003, 6.057001e-003, -5.755818e-003, -2.253181e-002, -4.944726e-002, -7.868571e-002, 1.205810e-003, 8.722079e-002, 2.686853e-002, 3.346541e-002, -2.385558e-002, -2.028497e-002, -6.783182e-003, -2.364186e-003, 7.665081e-003, 1.550197e-002, 9.920450e-003, -7.185172e-002, 3.121641e-002, 4.452318e-002, 3.077500e-002, 2.121297e-002, 5.585413e-003, -7.396131e-003, -6.726750e-003, 2.292121e-002, 3.451807e-002, 3.523869e-002, -2.075125e-002, 3.487075e-003, 1.814392e-002, 1.216017e-002, 8.167290e-003, 6.793526e-003, -1.489032e-004, 4.381079e-003, 1.621548e-002, 4.865948e-003, -1.945125e-003, -1.922471e-002, -7.059226e-004, 2.456878e-002, 1.630599e-002, 1.235294e-002, -1.010853e-002, -1.010853e-002, 1.235294e-002, 1.630599e-002, 2.456878e-002, -7.059226e-004, 9.602996e-003, 1.724641e-002, 5.651956e-002, -4.970514e-002, -2.144998e-002, -4.597195e-002, -5.106684e-002, -2.364740e-002, 7.007872e-002, -2.359243e-003, -1.468458e-002, -2.029664e-002, 1.300757e-001, 2.455987e-002, 1.176724e-001, 4.728135e-002, 1.791292e-003, -1.723774e-003, 1.429213e-002, 5.361696e-003, 1.380221e-002, -6.472991e-003, -4.939150e-002, -9.919803e-002, 1.926762e-002, 3.261996e-002, 2.477012e-002, 8.335636e-003, 1.695302e-002, 2.318706e-002, -5.271648e-003, -4.510710e-002, 1.449914e-002, -3.616416e-002, -4.158140e-002, -1.287705e-002, 3.009290e-002, -7.618453e-003, -6.475804e-003, 1.148937e-003, 5.470360e-003, 6.089815e-003, 1.844678e-002, 1.401106e-002, -7.386889e-002, -1.395957e-002, 1.497676e-002, 1.911980e-002, 7.414268e-003, 7.429847e-006, -5.421062e-005, 2.008074e-002, 2.657064e-002, 1.642772e-002, 1.277041e-002, -5.395037e-002, -1.709311e-002, 4.593329e-003, 8.071084e-003, -1.176882e-004, -7.316999e-004, -7.820296e-004, 1.868158e-002, 1.375569e-002, 4.054787e-003, -3.548138e-002, -8.816648e-003, -1.509488e-002, -1.997765e-002, -1.997765e-002, -1.509488e-002, 7.515445e-002, 1.863734e-002, -7.077206e-003, 2.100741e-003, 1.182393e-002, 2.894903e-002, 2.425362e-002, -3.621856e-002, -3.546121e-003, -7.417067e-004, 6.210455e-002, -3.513464e-003, -1.111547e-002, -1.111547e-002, -3.513464e-003, 1.113299e-001, 3.749344e-002, 8.330214e-003, 3.713493e-003, 9.535493e-003, -7.305345e-003, 1.969281e-003, -7.144045e-003, -4.973317e-003, -1.293619e-002, -3.755057e-002, 6.592215e-002, 2.291063e-002, 2.291063e-002, 6.592215e-002, 1.000353e-001, 2.432871e-002, 1.274994e-002, 5.025723e-003, 2.962361e-002, -1.626510e-002, 4.201309e-004, -1.322704e-003, -8.622132e-003, 3.953402e-003, -2.932463e-002, -2.509668e-003, -5.120898e-002, -5.120898e-002, -2.509668e-003, 1.258012e-001, 2.017282e-002, -3.726005e-003, -1.405169e-002, 2.199522e-002, 2.644822e-002, 9.188993e-003, -8.003826e-003, -2.089317e-002, 3.770787e-002, 6.474615e-002, 3.343281e-002, 3.451398e-002, 3.451398e-002,

© ISO/IEC 2004 — All rights reserved


Copyright International Organization for Standardization
Provided by IHS under license with ISO
No reproduction or networking permitted without license from IHS
Not for Resale

3.343281e-002, 7.660534e-002, 1.459663e-002, -1.607674e-002, 1.723132e-002, 2.647430e-002, 1.250115e-002, -5.305175e-003, -1.022723e-002, -1.288760e-002, -7.276563e-004, -1.267687e-001, 6.759917e-003, 4.615625e-003, 4.615625e-003, 6.759917e-003, -5.057613e-002, -1.057833e-002, 2.335553e-003, 9.448557e-003, 1.640487e-002, -6.893392e-003, -4.668773e-003, -4.636819e-003, -4.280147e-003, -3.923822e-002, -4.270305e-002, 2.640797e-002, 1.409058e-002, 1.409058e-002, 2.640797e-002, -6.831287e-002, 5.437092e-002, 1.119200e-002, -6.520679e-003, -2.006544e-002, -3.231580e-002, -3.262143e-002, -5.291787e-003, -1.348407e-003, -1.144391e-002, 1.289927e-001, 4.396048e-002, 5.533138e-002, 5.533138e-002, 4.396048e-002, 2.390423e-002, -9.133556e-003, -1.650701e-003, -4.711085e-002, 1.129026e-002, 6.025490e-003, -9.221781e-003, -1.533441e-002, -1.498022e-002, -5.234738e-003, -2.851371e-002, 2.757035e-002, 2.432691e-003, 2.432691e-003, 2.757035e-002, -5.973276e-002, -1.762104e-002, -1.031729e-002, 2.607449e-002, -3.791168e-003, -2.593545e-002, -1.443139e-002, -1.236388e-002, -3.443022e-003, -1.752552e-002, 7.518570e-002, 5.043291e-002, 9.293577e-003, 9.293577e-003, 5.043291e-002, 1.493511e-001, 3.323478e-002, 9.757008e-003, 1.190594e-002, 1.203596e-002, 1.731429e-002, 3.017881e-002, -3.550652e-004, -2.155091e-003, -5.440296e-003, -9.132323e-003, 8.012380e-002, 1.323653e-002, 1.323653e-002, 8.012380e-002, 1.757957e-001, 1.676310e-002, 8.987278e-003, 7.191263e-003, 2.320985e-002, -8.180356e-003, -1.505456e-002, -2.043444e-003, 3.143420e-003, 2.137707e-004, -5.455662e-002, -2.245338e-004, -3.221327e-002, -3.221327e-002, -2.245338e-004, 1.176524e-002, 5.472833e-002, 3.833085e-002, -1.082871e-002, -4.142754e-003, 1.932992e-003, 7.467661e-003, -4.546057e-003, -8.031607e-003, -4.129008e-003, -1.913141e-002, 2.525951e-003, 1.916715e-002, 1.916715e-002, 2.525951e-003, 5.803850e-002, -5.210107e-002, -1.322721e-002, 3.273552e-003, -8.122491e-002, 3.759291e-002, 2.708122e-002, -9.260676e-003, -2.689834e-003, -7.281375e-004, -1.723625e-002, -7.335638e-003, 2.287240e-003, 2.287240e-003, -7.335638e-003, -8.772424e-002, 1.049357e-002, 1.272770e-002, 2.456426e-002, 7.805082e-002, -3.100817e-002, 3.733963e-003, 7.121857e-003, 7.285385e-003, 1.695563e-002, 5.144176e-002, -2.356888e-002, 4.383782e-003, 4.383782e-003, -2.356888e-002, -1.016467e-001, 7.350722e-002, 2.787631e-002, 1.960079e-002, 3.095550e-002, -3.874030e-002, 1.983912e-002, 6.254552e-003, 7.069000e-003, 1.923454e-003, -6.977522e-003, -4.798371e-002, 2.585416e-002, 2.585416e-002, -4.798371e-002, 7.050252e-002, -5.298358e-002, 2.155815e-003, 6.628913e-003, 1.045352e-002, 3.663516e-002, 2.096631e-003, -7.189776e-003, 1.023689e-002, 1.595627e-002},
{3.304455e-003, -3.800885e-003, -3.163813e-003, 4.517444e-003, -5.029804e-003, 8.215820e-003, -1.354791e-003, 3.792455e-003, 1.279166e-002, -6.693055e-003, -4.175366e-003, 3.164060e-002, -4.175366e-003, -6.693055e-003, 1.279166e-002, 3.792455e-003, -1.354791e-003, 8.215820e-003, -5.029804e-003, 4.517444e-003, -3.163813e-003, -3.800885e-003, -1.352075e-002, 6.735368e-003, -1.090499e-003, -7.781309e-003, -1.201798e-002, 1.641893e-002, -7.100284e-004, -1.964527e-002, -8.251772e-003, -3.951035e-003, -8.200045e-003, 4.022161e-002, -1.400808e-002, 5.967144e-004, 1.592481e-002, -2.690669e-002, -1.046874e-002, -1.928061e-002, -2.611816e-002, -4.800581e-003, -1.043371e-002, -9.923255e-004, 4.032190e-003, -1.944020e-004, 1.653483e-002, -3.066299e-003, -2.469360e-002, -8.420810e-003, -4.227475e-002, -3.938023e-002, 2.052594e-002, -2.448380e-002, 2.654147e-002, 5.727996e-003, -5.528480e-002, -8.114446e-003, -1.849077e-002, -9.000219e-002, -3.176797e-002, -4.260070e-002, -3.229552e-002, -1.268327e-002, 1.485254e-002, 4.125179e-002, -3.679368e-002, -3.190163e-002, 1.566063e-002, 1.370060e-002, 1.510734e-003, 1.986364e-002, -6.174457e-003, -2.445801e-002, 1.189299e-002, -2.901270e-002, 6.136536e-002, -1.249228e-002, 2.048698e-002, -3.002265e-003, -1.550696e-002, -3.372182e-002, -3.755320e-003, -3.652815e-002, -1.668315e-002, 2.566998e-003, -8.711073e-003, -9.754195e-003, -5.652880e-002, -2.577668e-002, -1.305757e-002, 2.264650e-002, -8.223027e-003, 2.115496e-002, 5.379052e-002, 8.159976e-003, 1.765029e-002, 1.152608e-002, 3.089831e-002, -1.219083e-003, 1.356764e-002, -2.069684e-003, 4.403432e-002, -4.735294e-002, 5.086726e-004, 7.657267e-003, -3.137218e-002, -1.116409e-002, 4.188367e-002, 1.171063e-002, 8.167965e-003, -9.248661e-003, 1.246761e-002, -4.914555e-003, -2.457963e-002, 2.189937e-002, 2.863140e-002, 4.459795e-002, 1.944735e-002, -1.065286e-002, -1.823785e-003, -3.842141e-003, -2.620399e-002, -1.449644e-003, 6.520820e-002, -2.743923e-002, 2.840021e-002, 3.244214e-003, -2.177840e-002, -6.463838e-002, -4.114050e-002, 1.024489e-002, -2.196054e-002, 2.768767e-002, -1.153730e-002, -8.720596e-003, -3.380404e-002, -1.450822e-002, 3.635586e-002, 2.216020e-002, -8.847487e-003, 1.007065e-002, 4.459000e-003, 2.598886e-002, 2.403304e-003, -1.024705e-002, 1.173514e-002, -1.106875e-002, -1.545526e-002, -3.018947e-002, -1.173754e-002, -3.756057e-002, 4.644105e-003, 2.210562e-002, -1.384879e-002, -1.448348e-002, 1.982308e-002, 1.459328e-002, -6.778157e-003, -2.575111e-002, 1.592686e-002, 2.401113e-002, -1.394001e-002, -3.455539e-002, -2.058510e-002, -5.967661e-004, -2.002218e-003, 1.636437e-002, 4.062946e-002, 2.591880e-002, 1.028236e-002, -1.316955e-002, -2.283602e-002, -2.003246e-002, -3.709120e-002, 4.819666e-002, 2.179316e-002, 1.708317e-002, -2.867274e-002, 4.813422e-002, -2.675569e-002, -3.115497e-002, 1.268387e-002, 1.248354e-002, -2.429889e-002, -4.373213e-003, 2.028221e-003, 4.446847e-004, -6.844370e-003, -1.518841e-002, 1.753377e-002, 2.617573e-002, 9.276308e-004, -2.191570e-002, -4.903281e-002, 1.028325e-003, 9.583788e-003, -1.439619e-002, -9.324665e-003, -2.938444e-002, -2.945844e-002, 1.262610e-002, -2.617393e-002, -7.389040e-003, 8.784992e-003, -6.593194e-003, -1.492730e-002, -2.202131e-003, -


© ISO/IEC 2004 — All rights reserved

Copyright International Organization for Standardization
Provided by IHS under license with ISO
No reproduction or networking permitted without license from IHS
Not for Resale

3.584688e-003, -2.185682e-003, -8.111853e-003, -1.217492e-002, -1.690205e-002, 1.074030e-002, -2.279105e-002, -4.107459e-002, -6.274737e-002, 2.450657e-002, -8.259908e-003, -2.731438e-002, 1.152909e-002, 1.208474e-002, -9.456243e-003, 2.700773e-002, -2.154650e-002, 4.745073e-002, 2.607673e-002, 3.479770e-002, 1.295516e-002, -1.212741e-002, -2.303652e-002, -7.799649e-003, 3.214004e-004, -1.413177e-003, -1.662166e-004, 1.008843e-002, -3.476113e-002, 3.825986e-002, -6.420264e-002, -6.980169e-003, -7.443793e-003, 2.013415e-002, -2.617925e-002, 1.325651e-002, 4.063632e-003, 6.456583e-003, -4.358995e-002, -1.150456e-002, -3.328260e-002, 9.029136e-003, -1.178960e-002, -1.750528e-002, -1.283282e-002, -4.432469e-003, -1.225527e-002, -7.840532e-003, -1.266051e-002, -1.145117e-002, -2.482726e-002, 8.237294e-003, -7.516592e-002, -5.286929e-002, 4.501450e-002, 2.229904e-002, 4.895344e-002, -1.216982e-002, -6.868742e-002, 6.054142e-002, 1.724614e-002, 1.534362e-003, -9.993154e-003, -9.528035e-003, -1.448075e-002, -4.122472e-003, 9.788067e-004, -1.158494e-003, -8.463757e-004, -7.331414e-003, -1.637437e-002, 9.802268e-003, -3.364605e-002, -1.934927e-003, -2.535297e-002, -1.853982e-002, -2.646403e-003, -7.610970e-002, -5.167087e-002, 2.057597e-002, -3.433765e-003, 4.730380e-002, -2.736208e-002, 1.534781e-002, 1.161485e-002, 1.644858e-003, -7.608408e-003, 9.462889e-003, -9.375303e-003, -9.736976e-003, 5.863239e-003, -1.015583e-002, -2.666397e-003, -3.565208e-003, 1.531120e-003, 1.473542e-002, -1.205411e-002, 8.437968e-002, 6.590048e-002, -3.003396e-003, -1.202638e-002, 6.731394e-003, 5.587673e-002, -1.824485e-003, 1.094872e-002, 5.357580e-003, 5.357580e-003, 1.094872e-002, -1.824485e-003, 5.587673e-002, 6.731394e-003, 5.509171e-002, 1.784901e-002, -2.511762e-002, 7.916636e-002, -6.370487e-003, -2.492882e-002, -5.936747e-002, -8.477839e-002, -3.514624e-002, 2.630318e-002, 5.102889e-002, 7.329937e-003, -3.742705e-003, 1.142553e-002, 4.676509e-002, -1.395904e-002, -7.621248e-003, -2.302191e-002, -1.864632e-002, -5.676042e-003, 2.759862e-002, -4.207381e-002, 1.720038e-001, -3.332093e-003, 3.678806e-002, -1.699637e-002, -2.448223e-003, -1.332577e-002, -1.024228e-002, -5.332846e-004, -2.149963e-002, -1.244019e-002, 2.088396e-002, 1.632429e-003, 7.466741e-002, -8.851893e-003, -4.433725e-002, -3.442603e-002, -1.422612e-002, -7.218101e-003, -3.480964e-003, -1.609662e-002, -2.212908e-002, 7.265707e-002, -5.390494e-002, 2.596070e-002, 1.735954e-002, -4.160710e-003, -1.475388e-002, -2.393164e-002, -8.620361e-003, -1.573015e-002, -1.740462e-002, -1.464402e-002, 3.395238e-002, -1.986892e-002, -1.927389e-003, 2.086871e-002, -8.334817e-003, -1.777927e-002, -6.046643e-003, -4.874743e-003, -1.265438e-002, 3.009554e-003, 1.635065e-002, -1.606926e-003, 1.145566e-002, 2.248470e-002, 2.352718e-002, -1.604099e-003, 1.179282e-002, -1.460332e-004, -1.460332e-004, 1.179282e-002, -1.604099e-003, 2.352718e-002, 2.248470e-002, 1.107460e-003, 2.947259e-002, -7.147226e-003, -6.765284e-003, -3.639540e-002, -8.694523e-004, 4.095488e-003, 1.395958e-002, 8.651343e-002, -5.635344e-002, 6.530998e-002, 2.214486e-001, 4.155008e-002, -7.493417e-003, -2.622596e-003, -2.130922e-002, -2.880279e-002, -3.874430e-002, -8.618678e-003, -4.212214e-003, 1.115704e-001, 9.990740e-002, -2.195238e-002, -6.563101e-002, -1.050331e-002, -1.520581e-002, -8.327721e-003, -6.755719e-003, -1.479827e-002, 1.007714e-002, 1.763004e-002, 2.331186e-002, 3.134809e-003, -5.864859e-002, 4.712005e-002, -2.279735e-002, -2.220169e-003, -1.148598e-002, -6.306705e-003, -8.256211e-003, -3.667973e-003, -1.265962e-002, -2.634377e-002, 3.392088e-002, -1.557965e-002, 5.060648e-002, -3.273499e-003, -1.130537e-002, -1.245324e-002, -1.484809e-003, -5.538439e-003, -1.130844e-002, -9.238562e-003, -1.195359e-002, 3.195025e-002, -2.389534e-002, -1.451954e-002, 1.916593e-002, -7.140130e-003, -1.378762e-002, -7.530948e-003, -5.919169e-003, -1.607044e-002, -1.161862e-002, -1.031089e-002, 6.249904e-003, 7.849695e-003, 4.549151e-003, 5.938812e-003, 8.734400e-003, -1.320376e-002, 3.413403e-002, 3.413403e-002, -1.320376e-002, 8.734400e-003, 5.938812e-003, 4.549151e-003, 2.236888e-003, 1.772561e-002, -1.645308e-002, 9.261295e-002, 7.667334e-002, 4.183134e-002, 4.411591e-002, 1.156971e-001, 7.875748e-002, 1.204156e-001, 9.041228e-004, 7.650124e-002, -6.984630e-002, -3.477760e-002, 1.160642e-002, 2.528982e-002, 2.082857e-002, 3.095862e-002, 3.109747e-002, 1.013973e-001, 5.578324e-002, -6.068454e-002, 1.505984e-002, 2.511621e-002, 2.455215e-002, 2.750521e-002, -1.664721e-002, -8.992384e-003, 5.795176e-003, 2.471365e-002, -3.512422e-002, -7.728176e-002, -1.283062e-001, 7.462715e-003, -8.260768e-003, 4.386162e-003, 7.080453e-003, -2.194859e-004, -2.734869e-003, 8.047796e-003, 1.351822e-002, 2.216753e-002, 1.443277e-002, -3.698039e-002, -2.251198e-002, -5.084997e-002, -2.571606e-002, 5.717124e-004, 8.323155e-003, -5.971800e-003, 4.908688e-003, -2.339535e-004, 7.010747e-003, -1.323125e-002, 2.446187e-002, 5.044234e-003, -1.775414e-002, -4.429817e-004, -1.588595e-002, 4.594929e-003, 2.129993e-003, 1.205353e-003, -7.674880e-003, -7.122210e-003, -6.791130e-003, -2.130486e-002, -3.974516e-003, -2.048273e-002, -1.994018e-003, -1.221755e-003, 5.184421e-003, -3.634624e-002, -3.634624e-002, 5.184421e-003, -1.221755e-003, -1.994018e-003, -2.048273e-002, 9.097252e-003, 3.604676e-003, -2.927186e-002, 6.621575e-002, 8.413209e-002, 5.500805e-002, 2.336234e-003, 5.564744e-003, 5.938551e-002, 6.067540e-002, -2.466856e-003, 7.457779e-002, -5.800436e-002, 1.229705e-001, 6.460566e-002, 3.407282e-002, 3.797081e-002, -7.543445e-003, 3.967083e-003, -4.894782e-003, -1.199979e-002, -6.098242e-002, 2.848622e-002, -9.646339e-002, -8.264866e-002, 2.243336e-002, 5.060391e-002, 1.402988e-002, -1.635176e-002, -1.096814e-002, 1.946362e-003, -6.244668e-002, -1.295708e-002, 4.317615e-003, -5.705779e-002, -1.494851e-002, 1.886346e-002, 2.123217e-002, 1.898735e-002, -7.930397e-003, -5.983700e-003, -1.181784e-002, -

© ISO/IEC 2004 — All rights reserved


Copyright International Organization for Standardization
Provided by IHS under license with ISO
No reproduction or networking permitted without license from IHS
Not for Resale

3.102811e-002, -5.250868e-003, -1.389036e-003, -1.459429e-003, -1.113250e-003, 1.236233e-002, 1.049952e-002, 7.143840e-003, 2.444619e-003, 1.784177e-003, -1.187436e-002, -1.430040e-002, -6.021611e-002, 1.536428e-002, -2.522310e-002, 5.945720e-004, -2.996218e-003, 4.692513e-003, 3.495105e-003, -5.272841e-004, 4.169205e-003, -5.495049e-003, -1.698482e-002, -2.472923e-002, 2.192610e-002, -2.615543e-002, -4.506791e-002, -4.506791e-002, -2.615543e-002, -1.655525e-001, 6.433471e-002, 3.558834e-002, -9.950543e-003, 1.664407e-002, -5.606608e-002, 2.246854e-002, -2.013793e-002, -6.881517e-003, 3.265957e-003, 1.426544e-002, -8.455150e-002, -2.725296e-002, -2.725296e-002, -8.455150e-002, -1.741657e-002, -9.312833e-002, -3.434499e-002, -2.509669e-002, -4.453911e-002, -6.774000e-002, -3.205186e-002, -2.081323e-002, -1.044807e-002, -1.808550e-002, -3.218365e-002, 1.974718e-002, 9.156193e-003, 9.156193e-003, 1.974718e-002, -6.787198e-002, -5.358473e-003, 7.111854e-004, -1.208851e-002, -1.989345e-002, -1.144140e-001, -8.005581e-003, -1.726509e-003, -6.235456e-003, -6.357264e-003, -8.301637e-003, -6.123019e-002, 5.965452e-003, 5.965452e-003, -6.123019e-002, 2.321355e-003, 2.292907e-002, -9.416201e-003, 3.441885e-002, 5.946151e-002, -2.043795e-002, -2.802023e-003, -1.158357e-002, -8.760936e-003, -5.250999e-003, -7.729762e-003, -1.106274e-001, -4.386293e-003, -4.386293e-003, -1.106274e-001, 6.189782e-002, 2.911315e-002, -2.584472e-002, -1.469331e-002, 2.571297e-002, -4.294669e-003, -1.624799e-002, -1.248743e-002, -6.827688e-003, 3.575895e-003, -4.048817e-002, 6.274377e-002, -2.013562e-003, -2.013562e-003, 6.274377e-002, -2.592692e-003, -1.774965e-002, -1.290101e-002, -1.480743e-002, -1.787321e-002, 7.970412e-002, 1.098730e-002, 3.652497e-003, -1.054709e-003, -8.607417e-003, 6.804406e-002, 4.329683e-002, -3.228118e-003, -3.228118e-003, 4.329683e-002, -2.812481e-002, 3.876186e-003, -1.569799e-002, -3.550376e-003, 2.512206e-003, 4.874489e-002, 1.970639e-002, 5.663436e-003, 6.129112e-003, 1.319437e-003, -1.610311e-002, -3.172601e-002, -5.729485e-002, -5.729485e-002, -3.172601e-002, 6.710173e-002, 5.293141e-003, -9.936965e-003, -3.467461e-002, 3.738027e-003, 2.991380e-003, -8.777678e-003, -6.638609e-003, -1.262860e-002, -1.977078e-002, 2.409495e-002, -2.116342e-002, -1.250451e-002, -1.250451e-002, -2.116342e-002, 2.674108e-002, 4.340436e-002, 1.018198e-002, 6.406391e-003, 4.199535e-002, 3.970582e-004, 9.326055e-003, 2.959978e-003, 3.947730e-003, -5.627371e-003, -1.897255e-002, -8.678172e-002, -2.124842e-002, -2.124842e-002, -8.678172e-002, 1.997335e-001, 1.464261e-002, 1.447956e-002, -6.324016e-003, -1.088155e-002, 3.828368e-003, -6.981152e-003, -7.476823e-003, -4.062810e-003, -2.070013e-002, -1.244679e-002, -4.929701e-002, 2.466008e-006, 2.466008e-006, -4.929701e-002, 1.945003e-001, -5.822079e-003, -1.267671e-002, 2.722817e-004, 6.248586e-003, 1.672650e-002, -1.717692e-002, -1.902497e-003, -8.308548e-003, -3.495718e-003, -3.145952e-002, 1.619156e-002, -1.744338e-002, -1.744338e-002, 1.619156e-002, 1.153694e-001, 1.030978e-001, 2.894551e-002, 3.583156e-003, 3.511445e-002, 2.524210e-002, -5.400387e-004, 1.257212e-002, 2.875030e-003, 5.289273e-003, -2.092114e-002, -3.244258e-002, 8.074141e-003, 8.074141e-003, -3.244258e-002, 1.000976e-002, 2.248843e-002, 2.597356e-002, 4.319731e-002, 3.838387e-002, -1.192314e-002, 1.884594e-002, 8.759059e-003, 1.694656e-002, 9.552045e-003, 2.364844e-002, -3.552004e-003, -1.023644e-002, -1.023644e-002, -3.552004e-003, -1.190165e-001, -3.806349e-002, -5.071688e-003, -9.406664e-004, -5.443621e-002, -1.497142e-002, -2.330298e-003, -2.907522e-003, 3.988415e-003, -2.386690e-004, -1.089395e-002, 1.483573e-002, 2.243891e-002, 2.243891e-002, 1.483573e-002, -1.246031e-001, 3.660696e-003, -2.439255e-004, -7.886578e-003, -1.762588e-002, -1.314635e-002, 4.643646e-003, 1.345050e-002, 2.157610e-003, 1.491828e-003, 5.082574e-002, 4.236302e-003, 2.298963e-002, 2.298963e-002, 4.236302e-003, 5.368054e-003, -1.457134e-002, 2.533875e-002, 4.414525e-003, -6.655808e-003, -1.425109e-002, -6.720306e-003, 4.313559e-003, 3.601372e-003, -8.915600e-003},
{1.563754e-004, 2.421581e-003, 1.167123e-003, 1.219930e-002, 3.551407e-003, -1.661506e-002, 4.631574e-003, -6.425529e-003, 3.196012e-003, 1.530208e-002, -1.012329e-002, 2.008736e-002, -1.012329e-002, 1.530208e-002, 3.196012e-003, -6.425529e-003, 4.631574e-003, -1.661506e-002, 3.551407e-003, 1.219930e-002, 1.167123e-003, 2.421581e-003, -6.882868e-003, -1.614142e-002, 1.143989e-002, 2.595097e-003, -2.041865e-002, 2.686509e-002, 3.196385e-003, 1.214946e-003, 1.696800e-003, -2.015762e-002, -6.296226e-003, 1.605108e-002, 2.140427e-002, 4.096453e-003, -1.044940e-002, 6.319907e-003, 2.290310e-002, 1.261185e-002, -2.374830e-004, 1.693730e-002, 1.725618e-002, -1.899672e-002, -3.009031e-002, 2.757586e-002, -3.527403e-003, 1.588814e-002, -1.379285e-004, 1.020052e-002, 6.108447e-002, 1.208566e-002, -3.552532e-002, 2.676812e-002, 2.003754e-002, 1.135018e-003, 2.057825e-003, 9.945943e-003, -3.334450e-002, -1.877682e-002, -7.120239e-004, -3.552129e-002, 1.276671e-002, 1.922801e-002, 2.335217e-003, 5.406652e-003, 1.180317e-002, -1.061373e-002, -1.215666e-002, 1.658382e-002, 4.277311e-004, -1.823599e-003, 1.172249e-002, 7.490847e-004, -1.652661e-002, 2.704169e-002, 3.113143e-004, -8.451101e-003, 3.865585e-002, -1.118262e-002, 1.389961e-002, 1.980265e-002, 3.103048e-003, -5.974390e-003, 3.787120e-002, -2.710896e-002, 7.065432e-003, -2.764298e-002, 3.321626e-002, 1.627941e-002, 3.342027e-002, 1.714883e-002, 7.223450e-003, 1.406109e-003, -3.268335e-003, -1.662810e-002, -1.668976e-002, -7.351432e-003, 1.142806e-002, 6.348167e-002, 2.020915e-003, -7.393777e-002, -2.945614e-002, 2.181444e-002, -1.885789e-002, -1.179507e-002, -1.848659e-002, 6.718948e-003, -1.306975e-002, 9.458614e-004, 4.538386e-002, 8.473318e-003, -3.119749e-002, -1.704762e-002, 1.162897e-002, 3.876515e-002, 2.280557e-002, -6.069273e-002, -3.051127e-002, -3.906101e-002, -


© ISO/IEC 2004 — All rights reserved

Copyright International Organization for Standardization
Provided by IHS under license with ISO
No reproduction or networking permitted without license from IHS
Not for Resale

3.496188e-002, 8.050079e-003, 2.522971e-002, -1.650781e-002, -4.235375e-003, 7.571018e-003, -1.288452e-002, -3.798152e-002, -7.758836e-003, 1.096841e-002, 1.149621e-002, -2.992946e-003, 5.752405e-003, -3.320659e-002, -1.641112e-002, -4.186035e-002, 1.087309e-002, -3.401222e-002, 8.791281e-003, 2.277107e-002, 3.099014e-004, -1.493913e-003, 1.285455e-002, -1.901418e-002, 1.552546e-002, -1.018797e-002, -4.495916e-002, 7.032056e-003, 3.246322e-003, -2.166972e-003, -1.402804e-002, -1.186921e-002, -2.653784e-002, 3.143183e-003, 1.585949e-002, 1.723847e-002, -2.011730e-002, -2.111589e-002, 4.109507e-003, 2.719351e-002, -3.036054e-002, -3.237010e-002, -1.710304e-002, -3.361461e-002, -3.173941e-002, -1.266940e-002, -5.032416e-002, -2.384525e-002, -3.504060e-002, -5.385548e-002, 2.479264e-002, -4.691061e-002, -1.204808e-002, 1.584247e-002, -1.372395e-002, -3.714807e-002, -2.773614e-002, -3.852273e-002, -3.313623e-002, -1.430521e-003, 2.395964e-003, -1.692847e-002, 1.753516e-002, -7.633497e-003, -3.070867e-002, -4.498530e-002, -1.612348e-002, 3.034678e-003, -1.609535e-002, -3.246171e-002, -3.297522e-002, -4.768158e-002, -1.531398e-002, 4.842634e-002, 1.452352e-002, 3.023528e-002, 4.370880e-002, -1.250776e-002, 3.175993e-002, 8.002660e-003, -6.283337e-003, 4.927453e-003, -9.786916e-005, 9.053888e-003, -2.898268e-002, -1.069810e-002, -3.324805e-003, 7.096434e-004, -4.712013e-003, -1.037271e-003, 1.511125e-002, -7.335720e-004, 2.930243e-002, 3.367717e-002, 2.248729e-002, 5.901768e-002, 4.883739e-002, 6.888621e-002, 3.882366e-002, -3.715047e-002, 5.630257e-002, 2.307605e-003, 2.902512e-002, 2.304972e-002, 9.805201e-002, 6.229215e-002, -1.259312e-002, 1.765585e-002, 5.156083e-003, -2.311572e-003, -8.283664e-004, -1.283334e-002, -4.992679e-003, -1.491912e-003, -2.303790e-003, -1.533074e-002, 3.405932e-003, 1.087445e-002, 1.894949e-002, -1.344810e-002, -2.247800e-002, -2.395760e-002, -1.793612e-002, 1.246226e-002, -1.070756e-001, 1.015469e-002, -5.767038e-003, -2.938144e-002, 1.716114e-002, -4.417950e-003, 1.317181e-004, -2.386894e-003, 5.040598e-003, -6.720334e-003, -4.095822e-003, -3.373455e-003, 1.516425e-002, 8.456707e-003, 1.818169e-002, -1.375250e-003, -3.019752e-002, -2.427962e-002, -1.751371e-002, -2.807788e-002, -1.250670e-002, 1.815687e-002, -3.608908e-002, 1.217835e-002, 1.088659e-002, -1.222277e-002, -7.767837e-003, -6.562484e-003, -4.809460e-003, -4.098151e-003, 4.386435e-003, 1.991453e-003, 1.217958e-003, 2.679317e-003, 1.257765e-002, -5.813742e-003, 6.546401e-003, 6.307102e-003, 1.394985e-002, -4.572522e-003, 1.981221e-002, -2.533810e-002, 1.354833e-003, 1.638904e-002, -4.352176e-002, -1.255634e-002, 2.919385e-002, 1.832124e-003, 1.552482e-002, -5.358331e-003, -1.966373e-002, -7.822601e-004, 3.957330e-003, 2.566746e-003, -4.411060e-004, 6.654168e-003, 2.269363e-002, 5.249881e-003, 3.117606e-002, 2.248825e-002, -2.269206e-003, 2.522455e-003, 2.917413e-002, 5.261955e-002, 1.714370e-002, -1.515634e-002, -2.713634e-002, 2.213213e-002, 1.851427e-002, 1.731590e-003, 1.731590e-003, 1.851427e-002, 2.213213e-002, -2.713634e-002, -1.515634e-002, -1.996622e-002, 5.778202e-002, -3.069175e-002, -4.838547e-002, -8.773102e-002, -1.392366e-002, -1.761142e-002, -1.008112e-002, -5.545607e-003, 1.843806e-002, 1.816568e-002, 1.025049e-001, 9.741435e-003, 5.100282e-002, -4.005830e-002, -7.513134e-002, -5.698160e-002, -4.854363e-003, -6.686063e-003, 1.746827e-002, 3.565903e-002, 2.720323e-002, -1.273310e-001, 7.570915e-002, -5.161609e-002, -1.343296e-002, -2.599496e-002, -2.643896e-002, -1.276784e-002, -1.144066e-002, 1.916661e-003, -1.123376e-002, -9.724354e-002, -4.025684e-003, 2.569254e-002, 1.105906e-002, -7.070015e-004, -2.201132e-002, -2.653630e-002, -6.928024e-003, -1.288546e-003, -3.505556e-004, -5.309256e-003, 6.467588e-002, -7.374577e-002, -3.337577e-002, 5.277318e-002, 1.509304e-003, -6.643545e-003, -9.671311e-003, -4.650704e-003, -2.637104e-003, -4.332235e-003, 2.235731e-002, -3.386009e-002, -5.303498e-002, 7.166122e-004, 5.313594e-003, -7.072221e-003, -5.546168e-003, 3.578384e-005, -3.437801e-004, -1.188944e-003, 7.170121e-004, -5.049395e-003, -2.705844e-002, -3.267041e-003, -1.492472e-002, -3.145481e-003, 1.497202e-002, 2.561097e-003, 2.529617e-003, 2.529617e-003, 2.561097e-003, 1.497202e-002, -3.145481e-003, -1.492472e-002, 1.210884e-002, -5.277620e-002, -9.092913e-003, -7.233119e-003, -7.385665e-003, -4.399107e-004, 6.006632e-002, 5.944166e-002, -8.589701e-003, 3.775410e-002, 8.411678e-003, -5.287414e-002, -8.513338e-002, 1.408926e-001, 6.502599e-002, 2.316232e-002, 1.932174e-002, 3.662120e-003, -1.057805e-002, 2.963596e-002, -4.563765e-003, 6.634793e-002, 5.926771e-002, -6.831924e-002, 1.282166e-002, 3.021798e-002, 5.110078e-003, 9.260193e-003, 6.153955e-003, 2.086377e-003, 3.813392e-002, -7.057371e-002, 1.828858e-001, 6.477531e-002, 9.635186e-002, -3.362183e-003, 7.553193e-004, 7.714866e-003, 5.326472e-003, -9.493898e-003, -1.313113e-002, 1.387791e-002, -1.285577e-003, -1.988532e-002, -3.399196e-002, -5.118645e-002, 2.357683e-002, -9.643959e-003, 2.905657e-003, -5.080008e-004, 6.152736e-004, 3.403815e-003, 1.012759e-003, 1.563797e-002, -5.778883e-002, -1.610526e-002, -4.332778e-002, 1.095027e-002, 7.708237e-003, 9.502403e-003, -4.944772e-004, -2.604238e-003, 4.395862e-003, 4.256044e-003, 1.653872e-002, -2.153971e-003, -1.559296e-002, -2.876553e-003, 1.124604e-002, 2.428307e-002, 2.521531e-002, 2.536768e-002, 2.536768e-002, 2.521531e-002, 2.428307e-002, 1.124604e-002, -2.876553e-003, -1.032091e-002, 1.619604e-002, 6.038479e-002, 7.740045e-003, -7.834521e-004, 9.756381e-003, 3.737839e-002, 3.806230e-002, -1.995198e-002, 5.979104e-002, -1.839286e-002, 4.959819e-002, -5.992346e-002, -6.794403e-002, -1.234529e-003, -9.021206e-003, -6.243626e-003, 4.334565e-002, 2.919068e-002, 5.171963e-002, -7.593304e-002, -6.250609e-002, 1.058749e-001, -3.934451e-003, -5.502508e-002, -1.171664e-002, -1.351002e-002, -6.127753e-003, 5.010949e-003, -2.160153e-002, -1.184432e-002, -

© ISO/IEC 2004 — All rights reserved


Copyright International Organization for Standardization
Provided by IHS under license with ISO
No reproduction or networking permitted without license from IHS
Not for Resale

3.407296e-002, 5.216232e-002, -2.297305e-002, 2.381282e-002, -2.349620e-002, 1.341504e-003, 2.793157e-003, -3.948334e-003, -8.160013e-003, -7.459153e-003, 3.955489e-003, 2.854321e-003, 2.095042e-003, 6.879844e-003, 3.521490e-002, 4.863777e-003, -1.070026e-002, 4.053666e-003, 4.329010e-003, -3.895101e-003, -2.388153e-003, -3.176134e-003, 6.055439e-003, 2.542099e-002, 1.809867e-002, 1.783444e-002, -2.214876e-003, -8.657951e-003, -4.895635e-003, 4.479012e-003, 1.977725e-003, 2.747104e-003, -6.630840e-003, 5.923756e-003, 1.186524e-002, 1.872679e-003, -7.703625e-003, 1.488910e-002, 2.513739e-002, -2.136849e-003, 4.356345e-002, 4.356345e-002, -2.136849e-003, 2.513739e-002, 1.488910e-002, -7.703625e-003, 1.579822e-002, -4.985781e-002, 9.174981e-002, 1.671474e-002, -2.612076e-002, 3.328706e-002, -1.438679e-002, 1.794780e-003, -1.482489e-002, -6.372781e-002, 2.641374e-002, -6.240975e-002, -8.606842e-004, -1.044205e-001, 7.394663e-002, 6.271716e-002, 5.081953e-002, -1.284350e-002, -2.519568e-002, -5.333385e-002, -8.823411e-002, -7.559897e-002, 6.310272e-002, -2.636057e-003, -1.331951e-002, -6.141217e-003, 9.333879e-003, 2.078026e-002, -5.239459e-003, -3.712625e-002, -1.374264e-002, 2.016027e-002, 8.970671e-002, 2.429916e-002, -3.364755e-002, -3.560506e-003, 4.273978e-003, -1.369164e-002, -2.070771e-003, -3.282355e-003, -7.982813e-003, 1.322270e-002, 3.229258e-002, 6.517469e-002, 3.571415e-002, 2.774679e-002, 1.869260e-002, -3.241278e-003, -2.758465e-003, 5.064434e-004, 6.213971e-004, 6.273639e-003, 1.553303e-002, 2.287827e-002, 2.199227e-002, 1.761545e-002, 7.706319e-003, -4.419862e-003, 4.967315e-005, -5.522272e-004, 1.784817e-003, 1.263984e-003, 1.758375e-002, 1.491756e-002, 1.915847e-002, 2.446743e-002, -6.938709e-002, 3.288623e-003, -4.175919e-003, -4.175919e-003, 3.288623e-003, 7.748950e-002, -1.768143e-002, -7.308733e-002, -9.418031e-003, -2.131653e-002, 1.249590e-002, -1.614680e-002, -8.487560e-003, -6.784833e-003, -9.268790e-003, -6.129381e-002, 5.568440e-002, 1.757392e-002, 1.757392e-002, 5.568440e-002, 1.671181e-002, 7.741330e-002, 1.657570e-002, 1.140777e-002, 8.840464e-003, -1.545648e-002, 2.358039e-002, -2.112991e-003, 3.131120e-003, 9.236244e-003, 5.611136e-002, -7.493502e-002, -2.415233e-002, -2.415233e-002, -7.493502e-002, -1.797643e-001, -6.184282e-003, -8.841708e-004, -7.580199e-003, -5.549108e-002, -8.701912e-002, 5.223147e-003, 1.651804e-003, -9.280835e-003, -2.041524e-002, -4.253164e-002, -1.779496e-003, 1.262603e-002, 1.262603e-002, -1.779496e-003, -7.337569e-002, -1.409677e-002, -1.071461e-002, -1.241432e-002, -6.446122e-004, -3.177987e-002, -1.971736e-002, -4.622947e-003, -1.216745e-003, -4.472976e-002, 1.793290e-002, 2.185157e-004, 3.390233e-004, 3.390233e-004, 2.185157e-004, -2.995773e-002, 1.017587e-002, -9.603599e-003, -2.873868e-002, -6.722118e-003, 1.346599e-002, -9.659896e-004, -1.181187e-002, -1.712279e-003, 5.917560e-003, 1.298917e-001, 1.595910e-003, -4.124497e-003, -4.124497e-003, 1.595910e-003, 3.688576e-002, 4.225928e-002, -2.982452e-003, 6.056239e-003, 7.059710e-003, 4.682336e-003, -2.244042e-003, -5.255460e-004, 5.347544e-003, -7.508322e-003, -7.188300e-002, 1.668619e-001, 2.933712e-002, 2.933712e-002, 1.668619e-001, 1.062438e-002, 3.390698e-002, 1.651115e-002, 2.011573e-002, 7.073909e-002, 6.366357e-002, -9.101864e-003, 1.232168e-002, 1.392479e-002, 2.245082e-002, 5.503624e-002, -3.152437e-002, -1.742560e-004, -1.742560e-004, -3.152437e-002, 5.091610e-002, 5.665872e-002, 1.006770e-002, 1.659275e-002, 6.836348e-002, 4.537000e-002, 1.541902e-002, 3.401643e-003, 6.634026e-003, 8.311121e-003, 3.967195e-002, -8.691371e-003, 2.144918e-002, 2.144918e-002, -8.691371e-003, -1.057544e-002, 7.255628e-003, 9.516484e-003, 2.426032e-002, 2.441362e-002, 4.135932e-003, 1.313156e-002, 5.521277e-003, 5.038848e-004, 1.479810e-002, -7.511877e-002, -1.621247e-002, -4.168097e-004, -4.168097e-004, -1.621247e-002, 1.693258e-001, -1.364924e-002, 7.812639e-003, -5.544055e-003, 5.084691e-003, 2.200490e-002, 1.069205e-002, 4.486582e-003, 4.230150e-003, -8.154939e-005, 3.518560e-002, -3.969642e-002, 6.256654e-003, 6.256654e-003, -3.969642e-002, 1.631875e-001, 1.930517e-002, 1.560771e-003, 1.526461e-002, -2.877389e-003, 4.973227e-002, 5.655853e-003, 4.304181e-003, 1.062979e-002, 2.334006e-002, -4.288224e-002, 1.464446e-002, -4.432974e-002, -4.432974e-002, 1.464446e-002, -8.924359e-002, -1.648945e-002, 2.588514e-002, 2.793433e-004, -6.913361e-003, -3.743869e-002, -4.988935e-003, -1.166797e-002, 1.575700e-004, -3.633014e-003, 2.459652e-003, 5.972350e-003, -4.383350e-002, -4.383350e-002, 5.972350e-003, -1.932744e-002, -5.974955e-002, -1.279095e-002, 6.063947e-003, 6.823602e-003, -1.794627e-002, -2.306456e-002, -4.822671e-003, 6.267003e-003, 4.008259e-003, 1.739421e-002, -7.889449e-002, -1.101779e-002, -1.101779e-002, -7.889449e-002, -1.349015e-001, -3.151160e-002, -9.284757e-003, -1.693230e-002, -1.107105e-001, -1.016673e-002, -3.045326e-003, 4.380043e-003, -4.280779e-003, -1.535165e-002, -6.055285e-003, -2.304590e-002, -1.110701e-002, -1.110701e-002, -2.304590e-002, -1.891229e-001, -8.606196e-002, -1.810203e-002, -2.321671e-002, -5.699952e-002, -1.486767e-002, -1.699934e-002, -4.771856e-003, -5.695979e-003, 2.208684e-003, 1.562461e-002, 4.567596e-004, 4.348161e-002, 4.348161e-002, 4.567596e-004, 9.629936e-002, 4.278539e-002, 2.721603e-002, -1.353758e-002, -1.802274e-002, 3.197279e-002, 7.210870e-003, 4.519762e-003, -9.829410e-003, 3.278465e-002},
{-2.172434e-003, 1.285762e-003, 1.359197e-002, 4.572690e-003, 5.018706e-003, -1.084428e-002, -2.457269e-003, 7.869260e-004, -6.862366e-003, 2.130470e-003, -3.962056e-003, -1.646577e-002, -3.962056e-003, 2.130470e-003, -6.862366e-003, 7.869260e-004, -2.457269e-003, -1.084428e-002, 5.018706e-003, 4.572690e-003, 1.359197e-002, 1.285762e-003, 3.002763e-002, 1.510498e-002, 1.048240e-002, -1.353035e-002, 4.027334e-002, -8.844231e-003, 3.884982e-002, 2.479612e-002, -1.345918e-002, -2.448086e-002, -


© ISO/IEC 2004 — All rights reserved

Copyright International Organization for Standardization
Provided by IHS under license with ISO
No reproduction or networking permitted without license from IHS
Not for Resale

2.636498e-002, 1.577703e-002, 3.144326e-002, 9.019546e-003, 2.406110e-002, -1.868943e-002, 9.285683e-003, -3.860854e-003, -1.289602e-002, -2.815356e-002, -7.982491e-003, 3.693849e-002, -5.799085e-002, 1.251010e-002, 1.068831e-002, 4.533174e-003, -2.072981e-002, 9.072297e-003, 3.417771e-003, 2.810167e-003, -3.447017e-002, -3.300530e-002, -1.126053e-002, -6.818892e-002, 4.045464e-002, 3.021055e-003, -2.903078e-002, 4.727145e-002, 3.709525e-002, 3.219811e-002, -1.500834e-002, -6.463094e-003, 2.054450e-002, 2.616250e-002, -5.816202e-004, -1.134175e-002, -5.219855e-002, -2.665664e-002, -1.352076e-002, 2.038421e-002, -2.371205e-002, -1.201841e-002, 6.571173e-005, -6.404339e-002, -8.833343e-003, -1.572638e-003, 1.145893e-002, 1.975782e-002, 2.070162e-002, 3.873006e-003, -2.236703e-002, -3.152926e-002, -2.243588e-002, 3.625632e-003, -1.286361e-002, -1.440197e-002, -5.164069e-002, -2.555039e-002, -1.797626e-002, -4.171027e-002, 3.342034e-002, 1.731125e-002, 1.538580e-002, 4.124131e-002, 2.143587e-004, -6.453266e-002, -1.543106e-002, -5.065604e-002, -3.443252e-002, -4.036638e-002, 6.591909e-003, -4.473651e-003, -9.206954e-003, -4.085488e-003, 1.445521e-002, 3.821573e-003, 1.440317e-002, -4.073453e-002, -1.103912e-002, 4.976486e-003, -2.915410e-002, 7.418547e-003, 1.709788e-002, -1.132110e-002, -8.854419e-003, 6.341748e-002, -1.059256e-002, -3.039101e-003, -1.508665e-002, -4.996624e-002, -9.203286e-002, -1.302050e-001, -8.543287e-002, -5.564757e-003, 5.576112e-003, 2.093730e-002, 2.141715e-002, -3.809823e-003, 6.293145e-003, 3.106162e-002, -1.761375e-002, -4.037082e-002, -1.635508e-002, 2.225853e-002, 1.194673e-002, 2.484285e-003, 4.821524e-002, 1.061724e-002, 4.695162e-002, -2.484528e-002, -4.580926e-002, -7.685327e-002, -4.333950e-002, 4.110881e-002, 4.941187e-002, -4.156552e-002, -3.064683e-002, 4.492554e-003, 1.560401e-002, -2.527824e-002, -3.300734e-002, -1.241249e-002, 1.814797e-002, -5.329131e-003, -6.133458e-003, -2.406078e-002, -2.256298e-002, 2.323446e-002, 3.264879e-002, -8.031080e-002, -1.857129e-002, -1.744487e-003, -1.027144e-002, 1.492947e-002, 2.656205e-002, -8.545318e-003, -7.424835e-003, -7.490927e-003, -4.109969e-002, -3.940923e-002, 2.117429e-002, -1.196808e-002, -1.213887e-002, 8.984127e-003, -2.501735e-002, -1.787588e-002, -2.090256e-002, -2.837479e-002, -4.609154e-002, 4.573288e-003, -1.897669e-002, 5.372240e-002, 4.436956e-002, 4.030848e-002, 8.229597e-003, -1.060297e-003, 6.400671e-003, 3.006055e-002, 3.274056e-003, 2.641480e-002, -4.967234e-002, 2.921935e-002, 7.096552e-003, 3.588893e-002, -1.234426e-002, 2.516674e-002, 5.157216e-002, -7.713804e-002, -3.553986e-002, -2.040024e-002, -1.027411e-001, -2.763171e-003, 1.322444e-002, 1.393754e-002, 1.087646e-002, 2.738083e-002, 1.560973e-002, -1.854031e-004, 2.698411e-003, 7.092144e-003, 1.584612e-002, -5.783486e-004, -5.127337e-004, -4.438213e-002, 3.865024e-002, -2.075715e-002, -3.126621e-002, -3.891672e-003, 7.059902e-003, -2.699446e-002, -3.906743e-002, 1.295905e-002, -2.704956e-002, -5.878280e-002, -1.974155e-002, -1.096231e-003, 3.077844e-003, 1.222138e-002, 2.003062e-003, 7.348097e-003, 5.307546e-003, -7.583141e-003, -6.239267e-003, -1.781667e-003, 9.462187e-003, -2.808244e-002, -8.722523e-002, -4.162832e-002, -8.668938e-003, 6.339792e-003, 4.456481e-002, -6.194830e-003, -2.917072e-002, -4.265894e-002, 1.173856e-002, -1.429743e-002, -1.199549e-002, -2.801690e-002, -2.030497e-002, -1.876398e-002, -1.199550e-002, 6.907514e-004, -1.760945e-003, 1.017981e-002, -1.305370e-002, 1.338923e-002, -7.659206e-003, -2.430350e-002, -3.340448e-002, 6.882905e-003, -3.325462e-002, -3.983157e-003, -3.026568e-002, 4.275481e-002, -2.562535e-002, 3.207443e-002, -3.983835e-003, -1.117572e-002, -3.170005e-002, -1.035957e-002, -1.285598e-002, -1.119757e-002, -1.234862e-002, 5.321919e-003, -1.346497e-002, -1.890900e-002, -9.227759e-003, 2.132359e-003, -6.468399e-003, -1.469353e-003, 3.133624e-003, -5.943344e-002, 2.059492e-002, 2.440899e-002, -4.685801e-002, 5.034508e-002, -1.983727e-002, -3.760457e-002, 1.224059e-002, -1.468167e-002, -2.305903e-002, -2.995749e-003, -9.574824e-003, -4.517468e-003, -3.212691e-003, -7.034479e-003, -3.714759e-003, -5.496883e-003, -4.168165e-003, -3.988810e-003, 9.579468e-003, -2.747696e-004, -2.883785e-002, -6.633699e-003, -7.256410e-002, -2.092969e-002, 7.435171e-003, -8.729801e-003, -5.118431e-002, 1.611108e-002, -3.843809e-003, 3.013855e-002, 3.013855e-002, -3.843809e-003, 1.611108e-002, -5.118431e-002, -8.729801e-003, 4.636519e-002, -9.664580e-002, -2.210449e-002, -4.180506e-002, 1.370020e-002, -3.440018e-003, -3.602599e-002, -2.368736e-002, 2.269430e-002, 2.637574e-002, 1.125188e-001, 2.099508e-002, 7.393489e-002, 2.753202e-002, 2.527745e-002, 1.383929e-002, 6.893839e-003, -9.233827e-003, 1.558207e-003, 1.773324e-002, 4.249670e-002, 1.328945e-002, -3.526740e-003, 1.227683e-001, 4.634092e-002, 7.258141e-002, 2.469031e-002, 7.951857e-003, -2.026773e-003, -3.978761e-003, 5.880541e-004, -4.658242e-003, 6.788617e-003, -5.318091e-002, 4.214097e-003, -1.597149e-002, 1.252577e-002, 3.131052e-002, 1.556375e-002, -7.235361e-003, -3.528612e-003, -1.268419e-002, 9.893745e-004, 4.088796e-002, 3.465773e-002, 6.973623e-002, -1.391919e-002, -1.743451e-003, 5.592926e-003, -5.516158e-004, 3.182365e-003, 5.548736e-003, -7.152330e-004, -1.675899e-002, 2.081266e-002, -4.979475e-003, 3.539957e-002, 2.542570e-002, -2.112514e-003, -2.754123e-003, -4.102621e-003, 3.647118e-003, 3.952440e-003, 3.023158e-003, -1.930172e-002, 8.451004e-003, -2.019826e-003, -2.060475e-002, -2.081005e-002, 6.864389e-003, 5.818104e-003, -2.042290e-002, -2.042290e-002, 5.818104e-003, 6.864389e-003, -2.081005e-002, -2.060475e-002, 8.742385e-003, 1.945825e-002, -7.072053e-002, 1.239863e-002, -6.599365e-003, -2.443675e-002, -6.921067e-002, -1.504618e-001, -1.049065e-001, 5.786484e-002, -7.592503e-002, 1.814161e-002, 1.331749e-002, 5.112617e-002, 2.966103e-002, -6.526950e-003, -2.005902e-002, -4.500684e-002, -3.097475e-002, -2.632098e-002,

© ISO/IEC 2004 — All rights reserved


Copyright International Organization for Standardization
Provided by IHS under license with ISO
No reproduction or networking permitted without license from IHS
Not for Resale

3.420618e-002, -4.347872e-003, 6.814880e-002, -5.268377e-002, 1.030556e-003, 2.428825e-002, 6.992206e-003, -8.896647e-003, -2.258925e-002, -4.618147e-003, -2.226031e-002, 2.364318e-002, 1.106028e-001, -2.978564e-002, 2.830500e-002, -1.056167e-002, 1.002989e-002, 1.647516e-002, -6.267317e-004, 1.074207e-002, 1.779302e-002, -8.087147e-003, 5.437799e-004, 1.909669e-002, 1.368039e-002, 1.854572e-002, -1.937000e-002, -5.625209e-003, 7.855220e-003, 4.120908e-003, 4.403022e-004, 1.393886e-003, 2.084986e-003, -3.070544e-002, 4.674502e-002, -4.740124e-003, 1.430552e-002, -5.678160e-003, -3.687052e-003, -1.238770e-003, 1.741295e-003, -6.743306e-003, -1.624066e-003, 1.040764e-002, 7.859494e-004, 2.626089e-002, -8.997096e-003, -2.624412e-003, 1.081401e-002, 2.979503e-002, -6.928503e-003, -8.152669e-003, -8.152669e-003, -6.928503e-003, 2.979503e-002, 1.081401e-002, -2.624412e-003, 5.127095e-002, -9.815176e-003, 2.066464e-002, 1.651090e-002, 3.172361e-002, -2.004428e-002, -2.416602e-002, -8.624645e-002, 3.256535e-002, -5.576965e-002, -6.162256e-002, 3.303180e-002, 6.462142e-002, 8.677903e-002, 1.280889e-001, 6.348028e-002, 2.300618e-002, -1.525692e-002, 9.226054e-003, 2.144535e-002, -7.037597e-002, -2.853733e-002, -2.695609e-002, 4.467252e-002, 4.287358e-002, 4.450729e-002, 4.834263e-002, 1.779335e-002, -2.072634e-002, -1.910652e-002, -7.808607e-002, -6.978514e-002, -3.276012e-002, -3.032164e-002, 5.854680e-002, 3.049151e-005, 2.121574e-002, 3.350221e-002, 2.967954e-002, -1.393423e-002, -1.135438e-002, -6.252461e-003, 1.608001e-003, 4.487514e-002, 5.959677e-002, -5.559867e-004, -2.293599e-002, -1.856491e-003, 2.101865e-002, 1.573614e-002, -1.112573e-002, -1.993236e-002, -1.032413e-002, -1.231891e-002, 1.383676e-002, 2.669713e-002, 3.636011e-002, 7.653665e-003, -8.055971e-004, 1.094405e-002, 1.156702e-002, -6.455871e-003, 4.164127e-003, -3.580459e-003, -4.548675e-003, 2.332349e-002, 1.409317e-003, 1.513101e-002, -2.285251e-003, 1.138929e-002, 6.026913e-002, 2.319809e-002, 2.319809e-002, 6.026913e-002, 1.138929e-002, -2.285251e-003, 1.513101e-002, 7.716244e-002, -2.088976e-002, -4.728180e-002, -5.644317e-002, -1.397242e-001, -6.909209e-002, 1.222616e-002, 2.417703e-002, 7.654910e-002, 8.863063e-002, 4.863870e-002, -6.159699e-002, 3.301869e-003, -5.956265e-002, -1.106363e-001, -2.905358e-002, -4.615531e-002, 6.742799e-003, 4.535852e-002, 7.017143e-002, -6.608956e-003, 6.662814e-002, 5.485928e-002, -3.528540e-002, -7.253127e-002, -6.712327e-002, -3.937494e-002, -3.985933e-002, 7.813316e-004, 3.138567e-002, 3.434626e-002, 3.988499e-002, 3.701862e-002, 9.246534e-002, 8.464446e-002, -1.473463e-002, -2.673406e-002, -2.464520e-002, -2.175494e-002, 2.372737e-002, 4.628545e-002, 3.611544e-002, 2.983637e-002, 6.827131e-002, 8.350539e-002, 1.790854e-002, -1.881412e-002, -1.324742e-002, -2.445561e-002, -1.747074e-002, 2.697236e-002, 1.476998e-002, -2.816763e-004, -3.649242e-002, 5.878111e-003, 4.852569e-002, 3.731645e-002, -1.227948e-002, -1.653146e-002, -1.241535e-002, -1.084944e-002, 1.664681e-002, 1.632000e-002, 1.033504e-002, 1.396762e-003, 4.832331e-002, 6.264066e-003, 1.399909e-002, 8.475670e-003, 8.475670e-003, 1.399909e-002, -9.369250e-003, 6.339574e-002, 3.269478e-002, 5.436895e-004, 1.399025e-002, -8.039317e-003, -4.046551e-003, 1.150393e-002, -1.533778e-003, 4.295767e-003, 2.198547e-002, 5.805484e-002, 2.456648e-002, 2.456648e-002, 5.805484e-002, 8.836236e-002, -2.219802e-002, -2.397398e-003, -8.145699e-003, -1.700720e-002, -8.172971e-003, -3.224853e-003, -2.828361e-003, -3.460202e-003, -7.798467e-003, 2.768055e-002, 7.051841e-002, 2.500610e-002, 2.500610e-002, 7.051841e-002, 1.122821e-001, -8.521923e-003, -7.762378e-003, -1.490525e-002, -1.245886e-002, 1.199254e-002, -1.792171e-003, -1.689867e-003, -8.505196e-003, -2.083133e-005, 5.502163e-002, -1.971474e-002, -3.030293e-002, -3.030293e-002, -1.971474e-002, 3.020854e-002, 2.201880e-002, -3.755156e-003, -4.026115e-002, 9.427657e-002, 1.097724e-002, 2.075215e-003, -9.304113e-004, 9.771857e-003, -1.209248e-002, 4.268711e-003, 7.291698e-002, 3.624051e-002, 3.624051e-002, 7.291698e-002, 4.323619e-002, -2.063787e-002, 1.984301e-003, -4.426999e-003, -2.897839e-002, 5.337265e-003, -9.172316e-003, 1.131392e-002, 6.700082e-005, 3.266129e-003, -2.508307e-002, -3.298439e-002, 2.995298e-003, 2.995298e-003, -3.298439e-002, 8.554587e-002, 1.561740e-002, -6.338107e-003, 1.164911e-003, -3.149396e-002, 6.003065e-002, 3.245241e-003, 2.425274e-003, 1.550984e-003, -6.951770e-003, -5.252422e-002, -4.328711e-002, -5.349967e-003, -5.349967e-003, -4.328711e-002, 7.731718e-002, -6.968876e-003, 1.736987e-002, 2.241361e-003, 3.452323e-002, 4.135816e-002, 5.471855e-003, 2.867818e-003, 2.565696e-003, 8.644507e-003, -3.219778e-002, 6.530245e-002, -1.431489e-002, -1.431489e-002, 6.530245e-002, -3.215221e-002, -4.793270e-002, -1.917949e-002, -3.303689e-002, -5.593148e-002, -1.876501e-002, -8.944043e-003, -1.481695e-003, -2.325577e-003, -2.186817e-002, -4.086832e-002, -4.760428e-002, 1.360083e-002, 1.360083e-002, -4.760428e-002, -2.741968e-002, -1.856856e-002, -9.524147e-003, -4.675128e-003, -5.701602e-002, -2.487050e-003, -7.438837e-003, -1.929777e-003, -1.506431e-002, -1.220154e-002, -6.350259e-002, 7.911368e-002, 1.974746e-002, 1.974746e-002, 7.911368e-002, 3.326532e-002, 4.685452e-002, 2.183860e-002, 1.507967e-002, 4.097340e-002, 1.033402e-002, 4.065610e-003, 1.153259e-002, -1.825909e-003, 1.424226e-003, -7.942032e-002, 2.432808e-002, 7.937090e-003, 7.937090e-003, 2.432808e-002, 5.237747e-002, 3.271016e-002, 1.234994e-002, 2.532123e-002, 3.586612e-002, 1.856892e-002, 1.094324e-004, -3.719871e-004, 9.926551e-003, -4.637906e-003, -2.386956e-002, -3.764869e-002, 1.626595e-002, 1.626595e-002, -3.764869e-002, -4.443616e-002, -8.480307e-002, -3.275474e-002, 1.272039e-003, -5.738775e-003, -1.417219e-002, -6.731916e-003, -1.938483e-002, -1.096564e-003, -3.261598e-003, -3.159999e-003, -1.268606e-002, -6.119346e-002, -6.119346e-002, -


© ISO/IEC 2004 — All rights reserved

--`,,```,,,,````-`-`,,`,,`,`,,`---
Copyright International Organization for Standardization
Provided by IHS under license with ISO
No reproduction or networking permitted without license from IHS
Not for Resale

1.268606e-002, 8.881334e-002, 6.046231e-002, 3.740561e-002, -1.227516e-003, -2.904623e-002, 3.892798e-003, -8.279845e-003, 2.333905e-002, -5.253995e-003, -1.112095e-002, 9.853381e-002, -5.425692e-003, -1.045205e-002, -1.045205e-002, -5.425692e-003, -1.445372e-001, -2.800974e-003, 5.272374e-003, -9.088098e-003, -4.440586e-002, -1.239425e-002, 7.046343e-003, 2.847551e-003, -1.097996e-002, -2.247394e-002, 1.204297e-001, -3.755733e-003, -3.722833e-005, -3.722833e-005, -3.755733e-003, -1.065155e-001, -4.290311e-002, -9.396156e-003, 2.911340e-003, 1.226874e-002, -1.080682e-003, -3.609488e-002, -1.113741e-002, 4.682792e-003, 9.794486e-003, -1.573051e-002, 3.554759e-003, -6.349912e-002, -6.349912e-002, 3.554759e-003, 3.631862e-002, 1.327500e-002, -3.247741e-002, 1.694508e-002, 1.934639e-002, 6.141705e-002, -1.126146e-002, -1.815761e-002, 2.185895e-002, 2.869402e-002},
{-1.869941e-003, -1.086229e-002, 1.025682e-002, 8.319285e-003, -9.069613e-003, -6.518636e-003, 3.797818e-003, -1.631798e-003, -6.588889e-003, -1.567762e-002, 9.802927e-003, -4.159137e-002, 9.802927e-003, -1.567762e-002, -6.588889e-003, -1.631798e-003, 3.797818e-003, -6.518636e-003, -9.069613e-003, 8.319285e-003, 1.025682e-002, -1.086229e-002, 3.344166e-002, 7.342009e-003, 3.044794e-002, 1.725956e-002, 2.390244e-002, -9.663347e-003, -8.715850e-003, -7.095784e-003, 1.043776e-002, -5.824845e-002, -9.736988e-003, -1.092757e-002, -3.934389e-002, 1.267030e-002, -1.856175e-002, 6.598518e-003, -3.966216e-003, -2.047037e-002, 2.403779e-002, -1.743029e-002, 1.142396e-002, 1.134309e-002, 4.074629e-002, 2.308555e-002, 1.396757e-002, -4.231822e-003, -8.083337e-003, -1.118137e-002, -4.779162e-002, -2.047461e-002, -3.209780e-002, -9.990024e-003, -1.522821e-002, 1.664460e-002, 1.145932e-002, -2.624406e-003, -6.407354e-002, 1.736598e-002, -7.219433e-003, 1.955120e-002, 1.631225e-002, -1.722789e-002, -3.632764e-002, -1.965728e-002, -2.836199e-002, -1.724419e-002, 7.977453e-003, -2.172289e-002, 1.018070e-002, 3.127009e-002, -1.534562e-002, -3.109268e-002, 1.851883e-002, -5.026409e-002, 4.366330e-002, -2.874172e-002, -1.119101e-002, -1.717258e-002, -2.320430e-002, 3.989116e-002, -3.591679e-002, 5.593890e-003, -2.446972e-002, -5.849990e-003, -2.353278e-002, -1.933237e-002, -2.400587e-002, -2.031224e-002, -2.359965e-002, -8.237828e-004, -4.608149e-002, -3.399317e-002, -6.063614e-002, -3.441049e-002, -1.683622e-002, -5.829861e-002, -6.203849e-002, 4.970035e-002, 1.143966e-002, -2.808581e-002, 5.788491e-003, 2.016241e-002, 3.076304e-002, -6.750245e-003, -2.652626e-002, 4.658588e-002, 3.433300e-002, -4.855561e-002, 2.645171e-002, 2.854033e-002, 1.137718e-002, 2.023723e-002, -1.795080e-002, 3.172355e-002, -2.286007e-002, -2.965741e-002, -2.668472e-002, -5.493701e-002, -4.198125e-002, -3.803559e-002, -3.795334e-002, -2.010327e-002, -1.866822e-002, -2.724449e-003, 1.534229e-002, 1.930889e-002, 7.826950e-003, -4.068017e-003, 3.937474e-002, 2.702546e-002, -2.959336e-002, -8.512537e-003, 1.880469e-002, 3.268067e-002, -2.165068e-002, 7.967200e-003, 2.944893e-002, -6.785358e-002, -4.587933e-002, -3.879009e-002, -2.541155e-002, 3.752803e-003, 4.999130e-003, -8.584145e-004, 3.093366e-002, 2.832114e-002, -3.363311e-002, 2.733884e-002, 1.740011e-002, -6.558207e-003, -4.643597e-002, 5.618190e-002, 5.752499e-003, -3.833290e-003, 5.840393e-002, 7.582249e-002, 1.658602e-002, 9.946227e-002, 3.821765e-002, -2.575568e-002, -4.213651e-002, -6.714582e-002, -3.389830e-002, -6.538098e-003, 2.423336e-003, -1.418846e-002, 7.938645e-003, 3.376107e-002, 8.979335e-003, 4.483619e-002, 6.218337e-003, 1.687596e-002, -6.254703e-003, 2.776117e-003, 4.710483e-002, -4.527982e-002, 1.800469e-002, 5.833170e-002, 7.686819e-002, 3.422657e-002, 5.098938e-002, -3.158049e-002, -6.009180e-002, -3.788086e-002, -4.643455e-002, 1.682710e-002, 3.578863e-002, 2.907614e-002, 1.530614e-002, 1.952769e-002, -9.505771e-003, 1.357660e-002, -2.262856e-002, 9.044291e-002, 3.384634e-002, -2.971103e-002, -4.118940e-002, 1.299378e-002, 9.601107e-004, 6.925595e-003, 1.989949e-002, 6.483056e-002, 3.399074e-002, 1.032601e-002, 7.597704e-003, 1.540799e-003, -1.901993e-002, -1.761982e-003, -4.178712e-003, 1.886925e-003, 8.205471e-003, -1.683023e-003, 3.268465e-002, 3.331425e-002, -1.316259e-002, 2.177702e-002, 3.288237e-002, 1.242888e-002, 1.364413e-002, 4.103824e-003, 5.904103e-002, -3.418638e-002, 8.692758e-003, 4.849547e-002, -9.078578e-003, 3.763183e-002, 3.955650e-002, 2.327585e-002, 5.619584e-003, 1.550516e-002, 2.181120e-002, 1.619225e-002, 3.413262e-002, -1.040958e-002, -2.722738e-002, -1.427903e-002, 2.206547e-002, 1.042970e-001, 4.650546e-002, -3.640208e-002, -1.535486e-002, -2.875306e-002, -2.209526e-002, -2.783164e-002, 3.727608e-002, 4.030756e-002, 1.946943e-002, 3.682107e-002, 1.792210e-002, 2.205533e-002, 1.868889e-002, 1.439506e-002, 1.732529e-002, 3.953192e-003, 1.356381e-002, 1.859672e-002, 4.175409e-003, -2.117115e-002, 2.680213e-002, 2.967552e-002, 5.514608e-002, 1.872536e-002, 8.958901e-005, -4.109768e-002, 1.925315e-002, -7.981257e-003, 4.687941e-003, 2.195348e-002, 1.622533e-002, 2.087413e-002, 3.076837e-002, 8.076334e-003, 1.070951e-002, 8.913710e-003, 7.078213e-003, -4.865689e-003, -1.268873e-003, 2.222747e-002, 4.782684e-002, 5.112105e-002, -1.705037e-002, -5.831101e-002, -4.530460e-002, -6.729148e-003, -2.471342e-002, -2.832485e-002, 3.464556e-003, 2.584752e-002, 3.527206e-002, 2.038558e-002, 2.066343e-002, 2.183529e-002, 1.847933e-002, -5.629336e-003, 9.607445e-003, 8.189098e-003, -9.119767e-003, -4.378310e-003, 6.918805e-003, -5.702312e-003, -4.467677e-003, -7.944655e-004, 1.112016e-002, 4.595612e-002, 5.120562e-002, -3.669098e-002, 1.867863e-002, -4.514947e-003, 2.689505e-002, -2.197159e-002, 9.679085e-003, -1.550957e-002, -1.550957e-002, 9.679085e-003, -2.197159e-002, 2.689505e-002, -4.514947e-003, -1.026340e-001, -5.495604e-002, -1.973097e-002, -6.080925e-002, -3.100891e-002, 6.100046e-003, 1.185902e-002, -3.662286e-002, -7.938208e-002, -

© ISO/IEC 2004 — All rights reserved


Copyright International Organization for Standardization
Provided by IHS under license with ISO
No reproduction or networking permitted without license from IHS
Not for Resale

1.710083e-001, 4.906888e-002, 8.099312e-002, 1.107181e-001, 6.309008e-002, -8.268611e-002, -8.245321e-002, -5.106204e-002, -5.884766e-003, -5.006601e-003, -1.334826e-002, 4.560577e-002, -6.311323e-002, -1.148559e-002, 6.633039e-002, 6.183319e-002, -4.653625e-002, -4.544527e-002, -4.302218e-002, -8.942834e-003, -2.897397e-003, 4.663632e-003, 1.463944e-002, 1.717928e-001, 5.254493e-002, 1.075534e-002, 6.491555e-002, 1.963155e-002, -3.272602e-002, -3.151260e-002, -5.047854e-003, 3.415519e-003, 8.052563e-003, 2.727066e-003, -5.863709e-002, 2.518632e-003, -3.199890e-002, 3.254338e-003, 2.728768e-002, 2.022042e-002, 1.095941e-003, -1.496316e-004, -2.209871e-003, -5.884206e-003, 5.947055e-004, -8.730515e-003, -2.407506e-002, -1.769272e-002, -1.111546e-002, 2.832145e-002, 1.989905e-002, 6.945258e-003, -1.173760e-004, -7.206213e-004, -4.603464e-003, 5.042948e-003, 7.429623e-003, -2.044993e-003, 6.555729e-003, 8.686642e-003, -7.281975e-003, 2.857344e-002, 2.987103e-002, 2.987103e-002, 2.857344e-002, -7.281975e-003, 8.686642e-003, 6.555729e-003, -7.499135e-002, 4.257709e-003, -1.508386e-001, -7.221431e-002, -7.284039e-002, -2.114695e-002, 1.287699e-002, 1.716435e-002, -4.032526e-002, 8.313123e-002, 7.193187e-002, 1.632813e-002, -6.444154e-002, -1.746851e-002, -9.672153e-003, -1.420015e-002, -9.670308e-003, 4.333531e-003, -5.885249e-002, -2.661968e-002, -5.968463e-002, -8.903115e-002, -1.416349e-002, 1.147564e-001, 2.422987e-002, -3.434886e-003, -3.215589e-003, -6.395280e-003, -1.145129e-002, -1.346571e-002, -1.512610e-002, -3.600549e-002, 1.087990e-002, 5.222988e-002, -4.670478e-002, 1.466368e-002, 5.254316e-003, 1.059710e-003, -2.114257e-003, 9.047071e-003, 1.056528e-002, 3.429759e-003, -9.423249e-003, 2.413307e-002, -1.324342e-002, -2.443054e-002, -6.053848e-003, -3.967386e-003, -2.564025e-003, -4.895282e-003, 1.106908e-002, 1.288181e-002, -3.966032e-003, -1.267265e-003, -2.340903e-002, -2.977542e-002, 1.416401e-004, -4.744987e-003, -2.867443e-003, -3.897442e-005, -2.584303e-003, -1.156358e-003, 6.351952e-003, 5.209435e-003, -1.162185e-002, -4.919332e-002, -1.602684e-002, 2.103117e-002, 3.536363e-002, 5.760703e-003, 4.769611e-003, -1.589892e-002, -1.589892e-002, 4.769611e-003, 5.760703e-003, 3.536363e-002, 2.103117e-002, -8.533914e-002, -3.920758e-002, -7.161647e-005, 5.568193e-002, 1.155763e-002, 1.883059e-002, -1.922506e-002, 3.412349e-002, 2.551737e-002, -6.770439e-002, 5.325814e-002, 1.963050e-002, 2.525148e-002, -8.227060e-002, -7.561048e-003, 1.645367e-002, 1.573279e-002, 1.271943e-002, 6.259403e-003, 3.626534e-002, 1.361332e-002, -7.227580e-002, 4.822401e-002, -3.150076e-002, -5.311910e-002, -2.773511e-002, 2.385603e-003, 2.289615e-003, 1.658906e-002, 2.923871e-002, 2.911915e-002, -5.473718e-002, -1.748529e-002, -1.365533e-001, -4.226779e-002, -2.208506e-002, -1.680228e-002, -1.910141e-002, -6.180789e-003, 1.379803e-002, 7.695858e-004, 8.526313e-003, 3.485915e-003, 3.947463e-003, -1.009630e-002, 4.461371e-002, 2.837326e-003, -2.107319e-002, 1.000158e-003, -1.151301e-003, 8.342767e-004, 1.446688e-002, 1.521904e-004, -2.418286e-003, -3.310044e-002, 3.159220e-002, -8.084850e-003, -4.141984e-005, -6.210735e-003, -1.272081e-002, -1.004601e-003, 5.267535e-003, -3.526281e-003, 5.316343e-003, 5.143924e-003, 2.067245e-002, -2.476746e-003, -1.290132e-002, 1.656140e-002, 2.426871e-002, -5.389994e-003, -7.776747e-003, -7.776747e-003, -5.389994e-003, 2.426871e-002, 1.656140e-002, -1.290132e-002, -4.187814e-002, 5.883134e-003, 3.410227e-002, 8.477957e-002, 9.509308e-003, -8.064509e-003, -1.823000e-002, -4.743535e-003, -2.133720e-002, -4.703684e-002, -4.500232e-002, 4.290141e-003, -2.928793e-002, 6.018642e-003, 5.172847e-002, 3.419629e-002, 1.650092e-002, 1.992285e-002, 4.325070e-002, 4.221871e-002, 8.606467e-002, -2.305738e-002, -4.837637e-003, 6.348088e-002, 3.383641e-002, 1.831148e-002, -3.218042e-003, 8.746750e-003, 2.212742e-002, 8.680748e-003, 1.048498e-002, 3.063762e-002, -1.728817e-002, -9.432309e-002, 1.393623e-002, 3.127936e-002, 2.877039e-002, 6.342281e-003, -5.713609e-004, 7.185532e-003, -3.485938e-003, 2.029541e-002, 1.976217e-003, -4.370268e-002, 1.929490e-002, -4.791364e-002, 2.856252e-002, 1.037410e-002, 2.506864e-002, 8.013924e-003, 4.281416e-003, 5.900415e-004, 8.132499e-003, 3.550724e-002, 4.904504e-002, 1.738166e-002, 1.605469e-002, 1.571007e-002, 2.554539e-002, 1.549399e-002, 6.775092e-003, 4.121511e-003, 9.055047e-003, 1.294310e-002, 1.021965e-002, -6.492713e-003, 7.178972e-004, -2.040201e-002, 3.076396e-002, 3.076396e-002, -2.040201e-002, -7.602931e-002, -2.325358e-002, -6.028182e-002, -3.590306e-003, -2.193855e-002, -3.893775e-002, 5.069218e-003, 1.685157e-003, 1.254526e-003, -7.980040e-003, -3.218167e-002, -1.309680e-001, -5.196955e-002, -5.196955e-002, -1.309680e-001, 9.946196e-002, -6.872188e-003, 6.155457e-004, 9.752263e-003, 3.029376e-002, 6.933024e-002, 2.736068e-002, -1.679129e-003, 2.761849e-003, 1.106069e-002, -3.169796e-002, -5.395793e-002, -2.039952e-002, -2.039952e-002, -5.395793e-002, 5.008034e-003, 2.712808e-002, 1.312468e-002, 8.856285e-003, 1.518397e-002, 3.166675e-002, 1.836005e-002, 5.021661e-003, 9.669143e-003, 1.097504e-002, 3.554952e-002, -5.837952e-003, -1.124292e-003, -1.124292e-003, -5.837952e-003, -5.456067e-002, -5.279039e-002, -1.057821e-002, -5.360616e-002, -6.766091e-002, -1.788057e-002, -1.476472e-002, 6.390559e-005, 1.110891e-002, -3.086710e-002, -2.725271e-002, 2.188577e-003, 1.753274e-002, 1.753274e-002, 2.188577e-003, -3.589827e-002, 3.310367e-003, -2.227956e-002, -1.629007e-002, -1.036271e-002, -2.447344e-002, 5.319754e-003, -5.489077e-003, -8.188420e-003, -1.379645e-002, 7.739512e-002, 1.342076e-001, 2.506065e-002, 2.506065e-002, 1.342076e-001, 1.065562e-001, 1.396120e-002, -8.861217e-003, 4.235829e-003, 4.705284e-002, -6.634054e-002, -9.807136e-004, -5.865838e-003, -4.471150e-003, -1.009631e-002, 7.198807e-003, 1.686485e-001, 4.925181e-002, 4.925181e-002, 1.686485e-001, 6.462387e-002,


© ISO/IEC 2004 — All rights reserved

Copyright International Organization for Standardization
Provided by IHS under license with ISO
No reproduction or networking permitted without license from IHS
Not for Resale

4.369961e-002, 9.046542e-003, -3.097613e-003, 1.039652e-002, -5.457630e-002, 2.661683e-003, -1.292185e-003, -2.061323e-003, 3.113488e-003, -1.309536e-002, -7.803159e-003, 2.632117e-002, 2.632117e-002, -7.803159e-003, -4.774566e-002, 9.590452e-003, -2.908820e-002, 6.845902e-003, 2.816322e-002, -4.044284e-002, -7.680736e-003, 1.575599e-003, -2.074945e-003, 8.376538e-003, 2.254040e-002, -7.432808e-002, -2.739456e-003, -2.739456e-003, -7.432808e-002, -1.124475e-002, -1.547028e-002, 5.662218e-003, -9.656474e-003, 2.437079e-002, -1.910238e-002, -9.645098e-003, -2.662333e-003, -3.970279e-004, -5.092774e-003, -8.165471e-002, -1.044924e-002, 1.709854e-002, 1.709854e-002, -1.044924e-002, -1.628820e-002, -8.469646e-003, 1.086341e-002, 8.951473e-003, 6.184891e-003, -4.516363e-002, 7.385933e-003, -2.282905e-003, 7.569236e-003, -8.606238e-003, -5.823445e-002, -3.254706e-002, -2.110155e-003, -2.110155e-003, -3.254706e-002, -4.308716e-002, 1.371312e-003, 8.107877e-003, 1.098265e-002, 8.829112e-003, -4.069461e-002, 1.947810e-003, 3.463244e-003, -6.966797e-003, 5.191683e-003, 2.718171e-002, -3.693627e-002, -4.449234e-002, -4.449234e-002, -3.693627e-002, -6.087950e-003, 3.016266e-002, 1.672273e-002, 8.682694e-003, 6.157722e-003, -6.576162e-003, 9.938318e-003, 2.948128e-003, -3.233711e-003, 3.847846e-003, -2.195492e-002, 4.783015e-003, 1.157814e-002, 1.157814e-002, 4.783015e-003, 8.714736e-003, -2.882016e-002, 9.322171e-003, 1.794489e-003, -1.718623e-002, -4.181957e-002, -2.224852e-002, -5.449548e-003, 1.182922e-003, -1.319386e-002, 6.504239e-002, 2.619995e-002, 1.002428e-002, 1.002428e-002, 2.619995e-002, 6.482107e-002, -3.963131e-003, -1.511014e-003, 3.503474e-003, -2.111977e-003, 1.295831e-003, 5.353415e-004, 4.366625e-003, 7.445564e-003, 2.156750e-002, 4.753590e-002, 3.850600e-003, 1.514888e-002, 1.514888e-002, 3.850600e-003, 5.101731e-002, -2.896905e-003, 3.365019e-003, 7.360286e-003, -6.003400e-004, 1.266358e-002, 2.426853e-002, 7.742727e-003, 1.431897e-003, 5.169031e-004, -1.895992e-002, -1.292640e-002, 3.333822e-002, 3.333822e-002, -1.292640e-002, 3.837157e-002, 2.663796e-003, 3.343027e-003, 1.355656e-002, 2.120437e-002, -1.262600e-002, 2.145227e-003, 1.754457e-003, 1.365669e-002, -2.659970e-003},
{4.407046e-003, 2.798695e-003, -1.131644e-002, -1.142743e-002, 1.788119e-003, 2.509161e-003, 8.220237e-003, -6.531962e-003, 6.362885e-003, -6.397222e-004, 8.567574e-005, -2.941145e-002, 8.567574e-005, -6.397222e-004, 6.362885e-003, -6.531962e-003, 8.220237e-003, 2.509161e-003, 1.788119e-003, -1.142743e-002, -1.131644e-002, 2.798695e-003, -2.438105e-002, 2.509144e-002, 2.502837e-002, -7.016516e-003, -1.332090e-002, 1.423955e-002, -4.002738e-003, 1.339011e-002, -2.561100e-002, 5.163753e-002, -6.937583e-002, -3.726214e-002, 1.738579e-002, 2.649818e-002, -6.500083e-003, -2.773122e-002, 9.880353e-003, 1.218615e-002, 2.596269e-003, 2.526047e-002, 6.820961e-003, 3.388829e-002, 6.731737e-002, 3.661829e-002, 1.266751e-002, -5.133731e-004, -3.134283e-002, -2.186198e-002, -2.071163e-002, -9.212437e-003, 2.534829e-002, -3.000762e-002, -1.137041e-002, -8.861366e-003, 7.665999e-002, -2.578872e-002, 6.090199e-002, -9.598846e-003, -2.322463e-002, -3.395979e-002, -3.427442e-002, 3.604852e-002, 2.067513e-002, 5.940573e-002, -2.119054e-002, -2.050711e-002, 9.468513e-003, 1.718755e-002, 1.723367e-002, 7.774217e-003, 4.624944e-002, 1.402942e-002, 6.430914e-002, 1.453532e-002, -1.649575e-002, 1.928604e-002, -5.909689e-002, 6.619853e-002, 1.955041e-002, 3.871552e-004, 4.444427e-003, -1.180197e-002, 5.739276e-002, 2.107119e-002, 2.537680e-002, -1.434374e-002, -2.400945e-002, -1.113700e-002, 1.012249e-002, 2.237821e-002, -1.560858e-002, 1.909780e-002, 4.594288e-002, -2.113554e-002, 1.176417e-002, -2.282563e-003, 9.553123e-003, -2.720354e-002, -2.331799e-003, 5.980105e-003, 3.350398e-002, 3.011209e-002, 2.881658e-002, 3.790541e-002, -2.498726e-003, 3.101934e-002, -1.474849e-002, 3.164449e-003, 3.193397e-002, 1.459515e-003, -1.891548e-002, 2.196156e-002, 4.695847e-002, -2.296327e-002, -1.515101e-003, 1.514764e-002, -2.569501e-002, 2.628963e-002, 3.484846e-002, 1.648365e-002, 1.748664e-002, 5.615004e-002, 8.445601e-003, 6.132467e-002, 4.907445e-002, 3.795365e-002, 4.982694e-003, -3.513690e-002, 3.073223e-003, -1.846969e-002, -8.415791e-003, -1.827752e-002, -2.549267e-002, 4.896038e-003, -1.222522e-002, 3.044844e-002, 4.652889e-002, 4.001339e-002, -1.393361e-003, -4.810563e-002, -2.164195e-002, -3.915533e-002, -3.614262e-002, -4.026992e-003, 7.297789e-005, -1.493261e-002, -2.885527e-002, -8.382639e-002, -1.946092e-002, 2.637378e-002, -5.325831e-004, 1.899457e-002, 3.682562e-003, -2.924547e-003, 1.148828e-002, -3.753035e-002, -1.446344e-002, -7.050751e-003, -3.913723e-003, 1.923485e-002, -1.866873e-002, -2.468333e-002, -2.824056e-002, 1.061315e-002, 7.227886e-003, -2.587348e-003, -3.538781e-002, 4.910182e-003, 3.095667e-003, 1.892877e-002, -7.884272e-003, 8.535901e-002, 2.717305e-002, 1.811060e-002, 1.972528e-002, 3.901529e-002, -4.523124e-002, -1.201382e-002, 1.528362e-002, -8.341117e-003, 2.600643e-002, -2.028226e-002, -6.361712e-002, -7.083209e-003, -3.207473e-004, 1.320065e-003, -2.756496e-002, -1.111307e-002, -1.734059e-002, -9.911974e-003, -1.557062e-002, -1.918572e-002, 3.650513e-002, 2.412472e-002, -6.289025e-002, -2.238489e-002, -2.576915e-002, -8.892575e-003, -2.593573e-002, -8.793994e-003, 2.108216e-002, -2.439124e-002, 5.553315e-003, -3.013731e-002, -1.208627e-002, -2.110990e-002, -4.788542e-004, -1.013422e-002, -2.303207e-002, -2.875892e-002, -2.251814e-002, -1.442565e-002, -1.319175e-002, -9.139291e-002, -3.374981e-002, 8.311078e-003, 2.805456e-002, 3.586830e-002, -9.063530e-003, 3.397848e-002, 5.337413e-002, 3.173835e-002, 3.212989e-003, -4.089973e-002, -2.375349e-002, -3.940471e-002, -2.506872e-002, -2.967560e-003, -2.289951e-002, -1.681161e-002, 2.537759e-003, -1.247672e-003, -2.440865e-002, -1.521293e-002, 4.362527e-002, -8.951501e-003, 7.914926e-003, -1.214571e-002,

© ISO/IEC 2004 — All rights reserved


Copyright International Organization for Standardization
Provided by IHS under license with ISO
No reproduction or networking permitted without license from IHS
Not for Resale

2.100400e-002, 5.891921e-002, -3.384652e-002, -3.245563e-002, 3.584551e-003, 1.608920e-002, 3.347041e-002, -4.511933e-005, -9.458391e-003, -1.177114e-002, -1.564453e-002, -1.988164e-002, -6.752890e-003, -6.746649e-003, -1.768681e-002, -1.649181e-002, 6.173227e-003, -1.393539e-002, 9.438367e-003, 1.993384e-002, -1.103992e-002, -4.001623e-003, 1.507948e-002, -2.311497e-002, 1.193184e-002, 7.065063e-002, 2.627169e-002, 1.735937e-003, 2.071403e-002, -1.127826e-002, 9.364790e-003, 2.866675e-003, 4.327940e-003, -2.397143e-003, -5.345953e-003, -1.819840e-002, -1.169328e-002, -7.589642e-003, -3.159504e-003, 1.004478e-002, 2.688323e-002, -2.572735e-003, 1.947047e-002, 2.978982e-002, 5.733565e-002, 2.110678e-002, 1.033344e-002, 2.677093e-002, 4.905717e-002, 6.029988e-002, 2.894514e-002, 3.679280e-002, 2.354691e-002, 5.744852e-003, 3.287417e-003, -2.475739e-003, -1.764153e-005, -1.588852e-004, -7.003160e-003, -1.331038e-002, 4.104095e-003, 1.396754e-002, 2.283822e-002, 2.071432e-002, 4.299768e-002, 5.205044e-002, 1.093990e-002, -6.500180e-002, -1.377106e-002, 8.734555e-004, 4.058700e-003, -3.008337e-002, 1.908174e-002, -1.495677e-002, -1.495677e-002, 1.908174e-002, -3.008337e-002, 4.058700e-003, 8.734555e-004, -4.548500e-002, -2.549516e-002, -1.040529e-001, -7.945651e-002, 4.153813e-003, 3.039195e-002, 1.504276e-002, 2.266307e-002, -3.189569e-002, -2.974896e-002, 5.298859e-002, 1.298911e-001, 3.109976e-002, -5.649031e-002, -3.723035e-002, -2.866635e-002, -1.697765e-002, 2.546628e-002, 4.224115e-002, 1.890434e-002, 4.485687e-003, 1.168210e-001, 1.768387e-004, 2.999136e-002, -6.076267e-002, -2.003084e-002, -2.195608e-002, -1.805803e-002, 6.221008e-004, 2.969104e-003, 1.962694e-003, -2.862360e-003, -4.248135e-002, -5.161884e-002, -4.665808e-002, -7.914500e-002, -1.341429e-002, -2.043153e-002, -1.533308e-002, -7.956415e-003, -2.511466e-004, 7.346912e-003, -1.339395e-002, -1.580428e-002, -6.960227e-003, -1.692276e-002, -6.299785e-002, -1.087094e-002, -2.589328e-002, -1.597465e-002, 2.078304e-003, 9.719686e-004, 4.266204e-003, 8.419136e-003, -2.763301e-002, 1.558407e-002, 1.281960e-003, -8.447972e-003, -8.737997e-003, -5.626761e-003, -9.749781e-003, 2.806728e-003, 1.466716e-004, -4.089482e-003, -1.255313e-003, 1.218114e-002, 1.775730e-003, 9.858671e-003, 1.693845e-003, -1.474151e-002, -1.769449e-002, 3.562941e-003, 3.562941e-003, -1.769449e-002, -1.474151e-002, 1.693845e-003, 9.858671e-003, -3.509683e-002, -1.230656e-001, -9.989003e-002, -2.278493e-002, 2.467636e-002, 8.672778e-003, 3.298295e-002, 5.299924e-002, 1.723277e-002, 2.670803e-002, -7.508200e-002, -7.485242e-002, -8.292865e-002, 2.137081e-002, 4.313841e-002, 2.430773e-002, 1.449506e-002, -2.214423e-004, -1.109669e-002, -9.540860e-002, -1.274193e-001, 1.352407e-002, 1.897868e-001, 7.375217e-003, 1.964580e-002, 1.437687e-002, 2.162752e-003, -3.746544e-004, -2.644761e-002, -2.490553e-002, -5.383838e-002, -2.593336e-002, 2.398852e-001, -1.595746e-002, 3.377558e-002, -1.066587e-002, 5.901562e-003, 1.590691e-002, 5.246471e-003, -1.741611e-002, -1.875841e-002, -2.040818e-002, -4.787023e-002, 3.355549e-002, -3.614274e-002, 2.100095e-002, -2.176498e-002, -6.618819e-003, 6.233917e-003, 2.008738e-003, -1.753049e-002, -2.644504e-002, 6.441332e-003, -2.112432e-002, 1.066454e-002, -6.742412e-003, 1.984797e-002, 3.433209e-003, 5.709200e-004, 1.666260e-003, 1.655132e-003, -1.405963e-002, -6.928468e-003, 8.956547e-005, 6.580727e-003, 1.203178e-002, 1.194065e-002, -1.848714e-002, 1.719445e-002, 3.520558e-002, 6.824080e-003, 3.891505e-003, 3.891505e-003, 6.824080e-003, 3.520558e-002, 1.719445e-002, -1.848714e-002, 6.554068e-002, -3.842873e-002, -2.917734e-002, 6.048760e-002, 2.121644e-003, -2.162348e-002, -7.023120e-002, -1.217872e-001, -5.570753e-002, -8.509355e-002, -4.091863e-002, -9.593818e-002, 2.561939e-002, 5.838803e-002, 8.794598e-002, 2.166126e-002, 1.551483e-002, -6.339746e-003, -6.125550e-003, 1.668969e-002, -3.861081e-002, 5.409348e-002, -4.866844e-002, -5.080842e-002, 1.260697e-002, 4.359641e-002, 2.688019e-002, 1.410301e-002, -1.385096e-002, -5.916930e-004, -1.930800e-002, -1.280828e-001, -7.085420e-002, 2.380609e-003, 1.916451e-003, 1.603644e-002, 1.954701e-003, 1.204623e-002, 9.170538e-003, -8.942598e-003, -2.829491e-002, 2.580683e-003, -3.743546e-002, -9.469590e-002, 2.409516e-002, 1.293662e-002, 2.046138e-002, 1.091055e-002, -2.176968e-003, 1.193406e-002, -1.222521e-002, -7.700642e-003, 2.371743e-003, -1.407579e-002, -3.421846e-002, -6.702391e-003, 6.031290e-003, 9.273906e-003, 2.252345e-002, 1.056129e-002, -8.251707e-004, -7.651595e-003, -3.022315e-003, 2.321769e-003, -3.038118e-003, -1.005841e-002, 4.461723e-003, 4.209335e-003, -2.719803e-002, 1.336547e-002, 2.108197e-002, 2.471976e-002, 2.471976e-002, 2.108197e-002, 1.336547e-002, -2.719803e-002, 4.209335e-003, -1.739088e-002, 2.740436e-002, -7.956853e-002, -2.629863e-002, -7.779492e-002, -8.169388e-002, -1.292939e-002, -3.665140e-002, -2.226102e-002, -6.863158e-002, -7.187443e-002, 1.238743e-002, -5.839983e-002, -1.201984e-002, -1.191347e-001, -4.484563e-002, 4.296709e-003, 1.158114e-002, 1.184850e-002, 2.587811e-002, -2.076401e-002, -5.334131e-002, -7.674572e-002, 5.129240e-002, -2.325675e-003, -1.387134e-002, -2.510485e-002, -3.531368e-002, 1.042697e-002, 1.380044e-002, 1.786762e-002, 3.094863e-002, -1.673156e-002, -6.114257e-002, -4.777102e-002, 2.153642e-002, -1.239124e-003, -2.557026e-002, -1.933256e-002, 9.224735e-003, 1.381748e-002, 9.421450e-003, 2.740357e-002, 2.779186e-002, 1.610181e-002, -1.505125e-002, 5.493867e-003, -8.521884e-003, -5.402581e-004, -8.735920e-003, 1.399482e-002, 6.935575e-003, 1.819876e-002, 3.130339e-002, 3.545557e-002, -1.279192e-002, -2.909436e-004, 7.262889e-003, 5.327623e-003, -1.387648e-003, -1.071760e-002, 1.385448e-003, 7.080338e-003, 2.847759e-002, 1.572919e-002, -1.053915e-003, 2.858315e-003, -1.926908e-002, 5.881422e-002, 5.881422e-002, -1.926908e-002, 3.386171e-002, -4.884865e-002, -1.666466e-003,


© ISO/IEC 2004 — All rights reserved

Copyright International Organization for Standardization
Provided by IHS under license with ISO
No reproduction or networking permitted without license from IHS
Not for Resale

9.858970e-003, 1.734353e-002, 5.501132e-003, -3.074304e-002, -2.178957e-002, 1.661359e-003, -8.350628e-003, -6.283988e-002, -3.708775e-002, -1.235968e-002, -1.235968e-002, -3.708775e-002, 1.032914e-001, -1.756122e-002, -3.280016e-003, -9.838867e-003, -3.969228e-002, 2.138848e-002, -1.348419e-002, -1.747753e-002, 9.071164e-004, -3.169297e-003, 3.618081e-002, -1.143388e-001, -3.249955e-002, -3.249955e-002, -1.143388e-001, -9.599867e-002, -5.131924e-002, -1.633058e-002, -2.717059e-002, -8.322731e-002, -1.225969e-003, -3.991238e-004, 1.654376e-003, -1.507780e-002, -2.662625e-002, -4.124062e-002, 2.056685e-002, -2.297813e-003, -2.297813e-003, 2.056685e-002, 1.524383e-002, -4.491045e-003, 6.039352e-003, -6.339427e-003, -1.958717e-002, 1.480713e-002, -5.565484e-003, 3.972810e-003, -2.643544e-002, 1.577353e-003, 1.272589e-002, 2.888343e-002, -5.630941e-002, -5.630941e-002, 2.888343e-002, 1.743520e-002, -2.484135e-002, 1.005379e-002, 4.279864e-002, 3.757931e-002, 4.011974e-003, 9.080323e-003, 1.557833e-002, 2.003261e-003, 6.040647e-003, 3.348462e-002, -1.183091e-001, -3.398956e-002, -3.398956e-002, -1.183091e-001, -1.210606e-001, -1.186491e-002, -4.397748e-004, 1.664055e-003, 1.356343e-002, -6.551970e-002, -2.138423e-002, -7.983616e-003, -3.581895e-003, -1.088065e-002, -3.430740e-002, -1.109126e-001, -4.467975e-002, -4.467975e-002, -1.109126e-001, -8.405627e-002, -2.671675e-002, -2.851509e-004, -1.129288e-002, 3.931215e-003, -1.424242e-002, -1.337168e-002, -6.881499e-003, 1.650751e-003, -6.106707e-003, 4.114294e-002, 1.267160e-002, -5.511834e-003, -5.511834e-003, 1.267160e-002, 4.314735e-002, 5.793465e-002, 3.518362e-002, 3.452270e-002, 1.003346e-002, 1.991756e-002, 1.696281e-002, 9.898845e-003, 4.541944e-003, 1.078587e-002, 4.554701e-002, 1.663565e-002, -3.205433e-002, -3.205433e-002, 1.663565e-002, 1.741740e-003, -1.249407e-002, -1.175754e-002, -7.086883e-003, -1.525087e-002, -1.012619e-002, -1.317987e-002, -6.100113e-003, -1.156767e-002, -2.229474e-002, 2.331016e-002, 6.439966e-002, 2.506983e-002, 2.506983e-002, 6.439966e-002, -1.644542e-002, 1.303872e-002, -4.551957e-003, -1.652561e-003, -1.251797e-002, -4.662516e-002, 3.838636e-003, -1.304580e-002, -2.587228e-003, -3.027099e-002, 2.210226e-002, 2.851342e-002, -6.707951e-003, -6.707951e-003, 2.851342e-002, 1.927937e-002, -2.000851e-002, -6.557217e-003, -7.263481e-004, -4.875577e-003, -3.307425e-002, -1.113331e-002, -5.051191e-003, 3.113142e-003, 1.597796e-002, -1.038734e-002, 2.730919e-002, -2.348046e-002, -2.348046e-002, 2.730919e-002, -1.833819e-002, -3.910686e-002, -9.954058e-003, -4.584682e-003, -2.306211e-002, -8.726265e-003, -3.514135e-003, -3.895994e-003, -5.415637e-003, -1.047369e-002, -2.951122e-002, -1.030999e-002, 7.508479e-003, 7.508479e-003, -1.030999e-002, 5.137848e-002, 2.175084e-002, 2.067988e-002, -3.118255e-002, -5.414536e-002, 7.430441e-002, 2.043403e-002, 1.422721e-002, -1.356397e-002, -1.748326e-002, -2.740530e-002, -1.902975e-002, -3.020572e-003, -3.020572e-003, -1.902975e-002, -1.773427e-002, 2.857850e-002, 1.744251e-002, 1.305636e-002, 6.182551e-002, -1.224802e-002, 2.106520e-004, 5.288612e-003, -4.661722e-003, -1.425996e-002, -2.160958e-002, -5.699584e-002, -3.232354e-002, -3.232354e-002, -5.699584e-002, -3.289229e-002, 4.103283e-002, -3.639355e-003, -3.654173e-003, -9.151931e-003, -1.151818e-002, 1.799654e-003, -7.116609e-003, -2.913809e-003, -3.138625e-003, 1.435638e-002, 2.406214e-003, 2.123011e-002, 2.123011e-002, 2.406214e-003, 6.964703e-002, -1.399073e-002, -4.187539e-002, 1.672277e-002, 1.908477e-002, 5.529945e-002, 8.401321e-003, -1.170484e-002, 1.311845e-002, 2.775199e-002},
{-3.685661e-005, 3.494744e-003, 3.006756e-004, 8.788784e-003, -9.619524e-003, -5.258862e-003, -9.231048e-003, -1.378912e-003, 3.721383e-003, -1.721816e-002, -9.377129e-003, 3.105634e-002, -9.377129e-003, -1.721816e-002, 3.721383e-003, -1.378912e-003, -9.231048e-003, -5.258862e-003, -9.619524e-003, 8.788784e-003, 3.006756e-004, 3.494744e-003, 9.138985e-003, 2.018904e-002, -4.358624e-003, -1.312048e-002, -3.550506e-002, -2.615493e-002, -4.040100e-002, -2.648849e-002, -3.578143e-002, -6.408570e-003, 1.588287e-002, -4.720771e-003, 1.783281e-002, 5.913814e-003, 5.471316e-003, -7.423291e-003, 6.786815e-003, -1.700286e-002, -1.836623e-002, -3.304561e-002, 1.911318e-004, 6.457807e-003, -2.991778e-003, -1.293011e-002, -1.151376e-002, 4.115297e-002, -2.324490e-003, 1.826555e-002, -4.426009e-003, 2.155154e-002, 2.009944e-002, -1.065772e-002, 4.862059e-002, 1.206286e-002, -8.549238e-003, -5.711939e-003, -2.625904e-003, 5.931969e-002, 3.148992e-002, -1.087124e-002, -3.818410e-002, -1.875538e-002, -2.626885e-002, -3.950034e-003, 9.241114e-003, -2.839052e-002, 4.035269e-002, 1.564217e-002, 6.377477e-004, -1.408630e-002, 9.266348e-003, 1.822300e-002, 1.703651e-002, -8.430491e-004, 9.250647e-003, 4.264269e-002, 8.366887e-002, 7.279136e-003, -2.754643e-003, -2.317780e-002, -4.485388e-002, -3.228496e-002, -4.794918e-002, 4.116493e-002, 6.966656e-003, 2.393625e-002, 1.463590e-002, -2.060604e-002, 1.040096e-002, -5.779581e-002, -1.582721e-002, -7.337682e-003, 2.855236e-002, 3.866378e-002, 7.609478e-003, -1.591689e-002, 2.226774e-002, 6.904959e-003, 5.877715e-002, 4.931531e-002, -3.605661e-004, -3.813190e-003, 2.384437e-002, -7.697912e-003, 1.573237e-002, -1.177952e-002, -1.011254e-003, -9.537023e-003, 4.418526e-003, 6.495188e-002, -5.241546e-003, -4.313727e-002, -8.960750e-003, 1.571371e-002, -2.517018e-002, 2.740280e-002, 2.586009e-002, 2.533412e-002, 3.348887e-002, 2.180165e-002, 5.063817e-003, 1.840869e-002, 3.192533e-002, 2.408844e-002, 3.096391e-002, -1.238055e-004, -7.283781e-002, -2.448281e-002, 7.752496e-003, -2.218961e-002, 3.831307e-003, -1.859008e-002, 2.148161e-002, 1.489051e-003, -3.223485e-002, 5.939442e-002, -6.696608e-005, -3.293907e-002, -3.211489e-002, 2.164774e-002, 1.909697e-002, -3.767250e-002, -2.646987e-002, 2.463162e-002, -2.766340e-002, -8.412481e-003, -8.060532e-003, -1.198550e-003, -3.192439e-002, 2.247713e-002, -

© ISO/IEC 2004 — All rights reserved


--`,,```,,,,````-`-`,,`,,`,`,,`---

Copyright International Organization for Standardization
Provided by IHS under license with ISO
No reproduction or networking permitted without license from IHS
Not for Resale

7.206584e-003, 4.003305e-002, 3.437719e-002, 6.151689e-003, -6.872330e-003, -5.458734e-002, -3.231758e-002, -1.103436e-002, 3.031836e-002, -4.623979e-003, 6.106954e-002, 1.632410e-002, 2.527843e-004, 4.274744e-003, -4.543957e-003, 3.202333e-002, 7.571803e-002, 8.406960e-002, 3.646160e-002, 1.560636e-002, -2.472045e-002, -6.091602e-002, -2.080432e-002, 2.135754e-002, -3.474382e-002, -2.143401e-002, -3.388420e-002, -1.190813e-002, -2.534409e-002, 1.305877e-002, -3.766078e-002, 5.896985e-003, 1.237757e-002, 3.139447e-002, 3.037589e-002, 8.335957e-003, 3.448493e-002, 2.565348e-003, 1.231387e-002, 7.276184e-004, -4.627003e-003, -6.167965e-002, -6.519445e-002, 1.705279e-002, -3.441530e-002, 2.624515e-002, -1.899790e-002, -2.424659e-002, 2.618444e-002, 7.234166e-002, -2.479649e-002, 5.813191e-002, -1.894043e-002, 3.581491e-002, 2.443400e-002, 1.132655e-003, 4.724705e-003, 3.623425e-003, 1.020684e-002, 2.344736e-002, 1.401956e-002, 9.957108e-003, -4.193828e-002, -3.815087e-002, -3.742781e-002, -2.036570e-002, 2.574649e-002, -2.208862e-002, 4.966028e-002, -2.756794e-002, 8.422277e-002, 2.927455e-002, 1.816463e-002, -1.823352e-002, 8.304097e-003, 2.889397e-002, 2.817490e-003, 1.277604e-002, 1.092892e-002, 2.733511e-002, 2.037588e-002, 1.095091e-002, 8.983867e-003, 1.535147e-002, -4.081750e-002, -2.428472e-002, -7.103047e-002, -3.757652e-002, 3.805406e-002, -3.949767e-002, 4.060161e-003, 1.131859e-002, -1.927012e-002, -2.913013e-002, 2.472145e-002, -2.092694e-002, -1.584935e-002, -1.417165e-002, 4.404762e-003, -9.335944e-004, -1.339197e-002, 2.011061e-002, 2.424033e-002, 2.017342e-002, 9.541453e-003, -1.250210e-002, -1.271039e-002, -1.813974e-002, -1.584733e-002, -1.758633e-003, -1.906293e-002, -3.023444e-002, 2.811482e-003, 2.642088e-002, 6.507029e-003, 6.495193e-002, 3.426711e-002, -1.952525e-002, -9.025714e-003, 7.627946e-003, -3.295496e-003, 6.964968e-003, 6.861046e-003, 8.165128e-003, -2.986050e-004, -6.691552e-003, -1.075998e-002, -2.698279e-003, -2.115560e-002, 1.936747e-002, 1.863547e-002, 2.737826e-002, -1.190884e-002, 6.691703e-002, -3.641362e-002, 3.144268e-002, 4.094494e-002, -3.234147e-002, -1.921016e-003, -2.618031e-002, -2.775863e-004, 4.604417e-003, 5.584652e-003, 6.790956e-003, 7.982758e-003, 1.933297e-003, 5.986827e-003, -9.642841e-004, -1.163149e-003, -1.170890e-002, -2.173539e-002, -2.446983e-002, -1.612638e-002, 7.872713e-003, 1.046280e-002, 3.015869e-002, -2.352316e-003, -1.307653e-002, 1.485381e-002, -4.021104e-002, -3.396155e-002, -7.873634e-002, -7.873634e-002, -3.396155e-002, -4.021104e-002, 1.485381e-002, -1.307653e-002, -1.942163e-002, 4.427568e-004, -1.672940e-001, -1.065156e-001, -3.069958e-002, -4.158916e-002, -5.022685e-003, -3.369762e-002, -3.922310e-003, 4.553307e-002, 6.317827e-002, -3.772537e-002, 9.784672e-002, 3.309911e-002, 6.433402e-002, 7.053909e-002, 3.866014e-002, -1.371672e-003, -5.317263e-004, -4.633436e-003, -3.450884e-002, 6.043917e-003, 5.603896e-003, -9.199645e-003, 3.530884e-002, 4.938406e-002, 5.025874e-003, 1.191322e-002, -3.814207e-004, -1.072564e-002, -1.965708e-002, -1.795537e-002, 8.548944e-002, 9.498771e-002, -7.608021e-002, -4.638624e-003, -1.684962e-002, 5.773002e-003, 2.281679e-002, -1.665878e-003, -5.456103e-003, -2.735651e-002, -3.295097e-002, -4.744661e-002, 4.338846e-002, 3.346901e-002, -2.779930e-002, -3.300098e-002, 9.382214e-004, 1.817631e-003, 1.820757e-003, -8.826171e-004, -1.989987e-002, -2.890951e-002, -1.767579e-002, -1.852072e-003, 1.467713e-002, 1.790858e-002, -1.735058e-002, -5.321015e-003, -8.589999e-003, -3.562907e-003, -3.876225e-003, -1.140435e-002, -1.459248e-002, -1.551350e-002, 8.163533e-003, -1.933201e-002, -1.400819e-002, -2.525979e-002, 1.216636e-002, -3.213608e-002, -3.213608e-002, 1.216636e-002, -2.525979e-002, -1.400819e-002, -1.933201e-002, -2.619877e-002, -7.988537e-002, -7.139254e-002, 5.620398e-002, 3.186008e-002, 4.693785e-003, -4.909754e-002, -9.176015e-002, 2.519142e-003, -1.369410e-001, 5.918748e-002, 8.774823e-002, 1.183850e-002, 4.571716e-003, -3.483999e-003, -1.383244e-002, -5.816853e-004, 2.993321e-002, 3.774311e-002, -9.655554e-002, 2.073272e-002, -1.180377e-002, -8.265380e-002, 1.578417e-001, -1.721997e-002, -1.965746e-002, -8.592610e-003, -5.714213e-003, 1.478996e-003, 4.272411e-002, 2.827413e-002, -7.100154e-002, 6.480878e-002, 1.693656e-002, -2.457539e-002, -1.678331e-002, -2.179802e-002, -5.683853e-003, 2.405170e-003, 8.931028e-003, 4.685210e-003, -9.718272e-003, -4.636502e-002, -4.670046e-002, 4.034726e-002, 1.199843e-002, -1.019472e-002, -8.209693e-003, -2.623616e-003, 2.280521e-003, 6.371322e-003, -1.414163e-002, -2.416885e-002, -3.575666e-002, 1.657378e-002, -2.978459e-002, 1.003641e-002, -1.103522e-002, -6.368749e-003, 5.226455e-004, 1.016812e-003, -1.011706e-002, -1.302600e-002, -1.202573e-002, 4.708046e-003, 1.489092e-002, 1.891635e-003, 9.887490e-005, -5.572775e-003, 3.175159e-003, 3.803503e-002, 3.251564e-002, 3.251564e-002, 3.803503e-002, 3.175159e-003, -5.572775e-003, 9.887490e-005, -2.764038e-002, -2.040705e-003, 7.326447e-002, -1.204954e-001, -5.016511e-002, -3.963362e-002, 1.272439e-003, -2.584241e-002, 5.223841e-002, 4.664260e-002, 3.026367e-002, -4.505764e-002, -3.975413e-002, 1.003113e-001, 1.822906e-002, -1.029392e-002, 4.288983e-003, 2.410511e-002, 4.482360e-002, 1.391239e-002, 1.685429e-002, -1.092973e-001, 8.194328e-002, -1.149209e-001, -7.974213e-003, 2.049950e-002, -2.124647e-003, -3.062343e-003, -1.588209e-002, -1.508316e-002, -7.403646e-002, 9.711237e-003, 3.424225e-002, 2.628010e-002, 6.164210e-002, 3.256724e-002, 2.438154e-002, 1.858128e-002, 8.373879e-003, 3.922841e-003, 2.114356e-002, 3.604410e-003, 2.065018e-002, 6.580349e-002, 3.146049e-002, 3.171001e-003, -4.964474e-003, 3.069711e-002, 2.256222e-002, 4.042990e-003, 1.691889e-002, 1.018671e-002, -3.801542e-003, -1.318151e-002, -1.309694e-003, 3.765244e-002, 8.502432e-003, 6.963289e-003, 3.903469e-003, 1.529720e-002, 9.740586e-003, 3.199837e-003, 5.451082e-003,


© ISO/IEC 2004 — All rights reserved

Copyright International Organization for Standardization
Provided by IHS under license with ISO
No reproduction or networking permitted without license from IHS
Not for Resale

1.538438e-003, 6.201272e-003, 1.088386e-003, -7.739708e-003, -7.143481e-003, -1.659694e-002, 1.508026e-002, 1.444769e-002, 5.137379e-002, 5.137379e-002, 1.444769e-002, 1.508026e-002, -1.659694e-002, -7.143481e-003, -1.299430e-001, 1.736459e-002, 6.292740e-002, -2.475026e-002, 7.305762e-002, 9.350471e-003, 3.980403e-003, 1.692328e-002, -9.905454e-002, -4.693942e-002, -2.254078e-002, -1.444142e-002, 1.949532e-003, 1.364861e-002, 7.042732e-003, -3.350718e-002, -8.317896e-003, -1.487826e-002, -2.579826e-002, -3.509908e-002, 3.782860e-002, 9.622873e-004, 3.906254e-002, 1.348438e-002, 7.582391e-003, -3.075862e-002, 8.656192e-003, 1.966581e-002, -4.828385e-003, 2.363502e-002, 1.027274e-002, 2.559639e-002, 3.418583e-002, -1.244117e-002, 7.009433e-002, 4.339226e-002, 1.352415e-002, 1.397016e-002, 1.566635e-002, 1.603585e-002, 2.451246e-002, 5.355389e-002, 6.738272e-002, 6.086124e-002, -4.408793e-003, 2.847422e-002, 2.579863e-002, 1.483049e-002, 8.948041e-003, 7.957199e-003, 1.941762e-002, 2.638230e-002, 2.972210e-002, 6.588808e-003, 2.170662e-002, -8.019985e-003, 4.670264e-003, 1.710142e-002, 6.178420e-003, -5.288865e-004, 5.523401e-003, 1.850065e-002, 1.584966e-002, 1.367365e-002, 1.311893e-002, 1.945381e-002, 3.672804e-002, 6.750659e-002, -3.560066e-002, -3.560066e-002, 6.750659e-002, -3.857952e-002, 6.440367e-002, 5.645925e-002, -2.942703e-003, 6.247167e-003, -2.880037e-002, 9.501350e-003, 4.261068e-003, -3.921506e-003, 3.283918e-004, 1.760218e-002, 7.480295e-002, 1.881700e-002, 1.881700e-002, 7.480295e-002, -3.753732e-002, 6.373525e-003, -4.820745e-003, 2.442521e-003, 1.162581e-002, -2.888892e-002, -2.236325e-002, -4.532941e-003, -8.318531e-003, -7.241618e-003, -4.536691e-002, 8.688871e-002, 2.813514e-002, 2.813514e-002, 8.688871e-002, 4.106504e-002, 9.165002e-003, 2.337974e-003, 1.135667e-003, 3.372962e-002, -2.546897e-002, -1.159906e-002, -4.835515e-003, -3.713835e-003, -1.613812e-002, -2.723929e-002, 7.674194e-002, -1.105792e-002, -1.105792e-002, 7.674194e-002, -1.040791e-001, -2.071047e-003, -2.598340e-004, 3.872105e-003, 3.931933e-002, -5.963967e-002, 1.530437e-003, -3.827310e-004, 1.265139e-002, -1.482840e-002, -1.070278e-002, -2.618106e-002, 6.150023e-002, 6.150023e-002, -2.618106e-002, 4.512945e-002, -5.573891e-002, -3.135667e-003, 1.615754e-002, -1.914932e-002, 1.620571e-002, -1.758797e-002, -6.738429e-003, -3.533728e-003, -1.313420e-002, -4.597975e-002, 7.896119e-003, 2.271228e-002, 2.271228e-002, 7.896119e-003, 4.995058e-002, 2.010798e-002, 4.085758e-003, -8.911501e-003, -8.788111e-003, 7.392556e-002, -9.487111e-004, -1.506593e-003, -4.235273e-003, -6.136516e-003, 5.559405e-002, -2.461650e-002, 2.005648e-002, 2.005648e-002, -2.461650e-002, 2.995518e-002, -5.961879e-003, 1.669624e-003, -6.007242e-003, -1.193329e-002, 4.483331e-002, 9.727050e-003, 3.463020e-004, 6.808866e-005, 3.493876e-003, 2.517568e-002, -2.894806e-003, 6.542387e-002, 6.542387e-002, -2.894806e-003, -1.765030e-002, -3.145666e-002, -1.092429e-002, -2.047233e-002, -9.560272e-002, -7.791809e-003, -8.909590e-003, -3.643061e-005, -1.714077e-003, -8.688228e-003, -2.431363e-002, 5.828392e-003, -1.175283e-002, -1.175283e-002, 5.828392e-003, -1.290846e-001, -5.451975e-002, -1.823893e-002, -1.462618e-002, -8.783620e-002, -1.521123e-002, -1.137755e-003, -3.605581e-003, -9.784764e-003, 1.414910e-003, -2.232292e-002, 2.033659e-002, -2.147975e-002, -2.147975e-002, 2.033659e-002, -4.459566e-002, -3.248319e-003, -3.238478e-003, -9.946726e-004, 9.396349e-003, 2.537928e-002, 2.970190e-002, 1.715861e-002, 4.791777e-003, 1.568378e-002, 3.098065e-002, -3.025071e-003, -1.795500e-002, -1.795500e-002, -3.025071e-003, -3.541120e-002, 1.336030e-002, -2.695356e-003, -1.189414e-002, -2.288040e-002, 1.708111e-002, 6.774765e-003, 8.197211e-003, 4.439992e-003, 2.510357e-002, 6.435611e-002, 7.828580e-002, -8.385291e-004, -8.385291e-004, 7.828580e-002, -1.223784e-001, -2.008902e-002, -1.019184e-002, -2.017035e-002, -4.632406e-002, -2.634525e-002, 6.182395e-003, -2.903805e-003, 2.133753e-003, 6.435334e-003, -2.977966e-004, -3.547735e-002, 2.285273e-002, 2.285273e-002, -3.547735e-002, -9.437620e-002, 8.636385e-002, -3.142099e-003, 4.983249e-002, 7.232690e-002, -2.163278e-003, 1.804910e-002, 1.532956e-002, 1.737696e-002, 1.492580e-002, 4.882597e-002, -7.699444e-002, -2.984329e-002, -2.984329e-002, -7.699444e-002, 1.244952e-001, -8.307637e-005, -2.660957e-004, 1.555034e-002, 4.374022e-002, 1.996885e-002, -2.302649e-003, -3.728768e-003, 2.585666e-003, 5.982559e-003, -8.471271e-002, -5.491712e-002, -1.414034e-002, -1.414034e-002, -5.491712e-002, 1.029077e-001, 2.978418e-002, 1.190138e-002, 6.379655e-003, 2.989380e-003, 5.650306e-003, 9.149796e-003, 4.442680e-003, -4.340903e-006, -4.581576e-003, -1.836375e-002, -4.768690e-002, 1.268439e-002, 1.268439e-002, -4.768690e-002, -5.206429e-003, -4.218879e-002, 1.342057e-002, -1.184738e-003, 4.824055e-002, 2.559752e-002, 1.843531e-002, 1.522331e-002, 2.605010e-002, 3.633105e-002},
{-1.892879e-003, -3.953308e-003, -3.064790e-003, 2.922815e-003, 1.341804e-002, 1.116147e-002, -6.837358e-003, 8.766908e-003, 1.004932e-002, -2.319227e-003, -1.456759e-003, -8.075567e-003, -1.456759e-003, -2.319227e-003, 1.004932e-002, 8.766908e-003, -6.837358e-003, 1.116147e-002, 1.341804e-002, 2.922815e-003, -3.064790e-003, -3.953308e-003, 1.913870e-002, 2.207833e-002, -1.006403e-003, -3.231033e-003, -5.661456e-003, -2.719493e-002, -4.816361e-004, 1.287205e-002, -3.580046e-003, 6.430536e-003, -5.197096e-002, 3.867277e-002, -3.512014e-003, -3.748729e-002, -3.189136e-002, -1.077852e-002, -2.510304e-002, 1.247975e-002, 1.911913e-002, 1.500135e-003, -1.898720e-002, 1.968998e-004, 1.911132e-002, -1.569795e-002, -1.435350e-002, -3.317317e-002, -1.862673e-002, -3.548966e-002, -3.155272e-002, -4.238802e-002, -3.449945e-002, 4.952186e-002, -4.833743e-002, -8.263722e-003, 5.634096e-002, -2.017493e-002, -1.942159e-002, 1.549394e-002, -3.768266e-002, -2.103407e-002, -4.092881e-002, -3.481939e-003, -

© ISO/IEC 2004 — All rights reserved


Copyright International Organization for Standardization
Provided by IHS under license with ISO
No reproduction or networking permitted without license from IHS
Not for Resale

2.389557e-002, -1.865811e-002, 1.126497e-002, -4.134765e-004, 3.864730e-003, 4.599699e-003, 3.434673e-002, -2.051876e-002, -7.638345e-003, 1.159332e-002, 1.804476e-002, 3.365515e-002, -2.522244e-002, -3.745761e-002, 2.570093e-002, -1.432337e-002, 3.324390e-002, -4.376425e-003, 3.904307e-002, 7.299687e-003, -1.736554e-002, 4.422095e-002, -3.978384e-002, 3.309918e-003, 5.317398e-002, -2.382888e-002, 2.716979e-002, 1.870462e-002, -3.947569e-002, 2.675266e-002, -2.844447e-002, 1.643641e-002, -3.711325e-002, 2.082297e-002, 3.319182e-002, 1.437112e-002, 5.132576e-003, -2.226799e-002, -1.726472e-002, 5.271737e-002, 1.491929e-002, -3.654879e-002, -6.701623e-002, 1.858266e-003, 5.470941e-003, 1.573638e-002, 2.137527e-002, -7.053675e-003, -2.647598e-002, -1.025915e-002, -9.798406e-003, -4.765202e-002, -8.208764e-003, 1.682344e-002, -5.451851e-002, 5.171571e-002, 5.947178e-002, 4.234656e-003, -9.892885e-003, 1.377554e-002, 4.256199e-003, 6.388059e-002, 6.053391e-002, -1.109502e-002, -1.368624e-002, -3.729957e-002, 5.918414e-003, -1.597707e-002, -2.818567e-003, 2.998310e-003, -1.915013e-002, 4.901319e-002, 3.214558e-002, 1.047951e-002, -1.948613e-002, 2.459788e-002, -2.901227e-004, 1.281516e-002, -1.396850e-003, 3.805374e-002, 3.740500e-002, 2.000441e-002, 4.000084e-002, -4.341628e-002, -2.585945e-002, -8.460020e-002, -2.554935e-003, -6.262442e-003, -2.801526e-002, 3.464169e-002, -2.732170e-002, -2.103115e-002, -2.660506e-002, -1.495923e-002, -4.624857e-002, -2.223003e-002, -3.374460e-002, 6.492798e-002, 3.449752e-003, 5.076027e-002, 3.262567e-002, 1.825388e-002, 5.057049e-002, 2.240317e-002, -1.831537e-002, 4.840233e-002, -5.537514e-002, -2.991629e-002, 3.473379e-002, 2.859051e-002, 3.069410e-003, -1.105488e-002, 2.111401e-002, 2.460691e-002, 5.761400e-002, 4.037810e-002, -4.463582e-002, -3.207683e-002, 1.115404e-002, -4.614429e-002, 2.523978e-002, 1.789877e-002, 9.096391e-003, 5.372376e-003, -3.601085e-003, -1.005167e-002, -6.835733e-002, -5.100708e-002, -7.576791e-002, -1.243796e-002, 1.364195e-002, 4.473880e-002, -4.075791e-002, -4.120745e-002, -6.196967e-002, -1.706727e-002, 1.508600e-002, 6.619021e-002, 1.773618e-002, -3.512342e-002, -7.475036e-003, -3.403201e-002, -8.965645e-003, -1.784162e-002, -2.751508e-003, 2.960542e-003, -2.675754e-002, -2.616160e-002, -1.908288e-002, -4.051191e-002, 2.502617e-002, -1.191767e-002, -2.388573e-002, 6.022816e-002, 3.471958e-002, 2.561838e-002, 5.496115e-002, 7.899419e-003, 1.308405e-002, 1.139719e-001, 8.884835e-003, 3.118742e-002, -2.370415e-002, -4.174371e-002, -1.419462e-002, -3.092576e-002, -1.247097e-002, -1.221422e-002, -1.841389e-002, -2.735755e-003, -2.318135e-002, -2.313400e-002, 1.733116e-002, -1.417542e-002, 3.842063e-002, 7.544536e-002, -4.345166e-002, 4.933720e-002, 1.002018e-002, -3.960650e-002, 4.861394e-002, 2.125044e-002, 7.572970e-002, 9.688201e-003, -2.394202e-002, -3.336382e-002, -3.678577e-002, -2.255698e-002, -1.826549e-002, -6.484023e-003, -1.419777e-002, 6.173690e-003, -1.936970e-002, -9.658473e-003, 2.302874e-003, -5.871282e-003, 1.616389e-002, 9.155758e-003, 1.111055e-002, -9.195667e-003, -9.516467e-003, 2.113991e-002, -4.701907e-003, 1.667944e-002, 1.676988e-002, 1.183276e-002, 6.461187e-004, -2.636903e-002, -1.159052e-002, -1.692754e-002, -1.159765e-002, 8.056310e-003, -1.406815e-002, -7.780172e-003, -1.582268e-002, -2.830614e-003, 3.943057e-002, -5.518435e-003, 3.143436e-002, 7.115981e-003, 3.338214e-002, 1.666396e-002, -1.213106e-002, -8.801093e-002, -5.163961e-003, 3.514948e-002, 3.766735e-002, 2.741023e-002, -8.793257e-005, -1.384607e-002, -8.958596e-003, -8.398267e-003, -2.719121e-004, -5.112019e-003, -1.076114e-002, 1.976949e-003, 4.347372e-003, 8.323772e-003, 3.105380e-002, 5.453649e-003, 2.424148e-002, 3.917098e-002, 6.738840e-002, 1.143529e-001, 1.383317e-003, 7.438056e-003, 3.980464e-002, 1.142159e-003, 3.916977e-002, 5.143183e-002, 5.143183e-002, 3.916977e-002, 1.142159e-003, 3.980464e-002, 7.438056e-003, 3.010169e-003, -3.461097e-002, -5.100284e-002, -4.928378e-004, -5.061524e-002, -4.029270e-002, 2.339505e-002, 4.124659e-002, -1.739624e-002, 3.748748e-002, -9.145442e-002, -1.333517e-001, 1.733349e-002, 4.815305e-002, 3.387362e-002, 1.709228e-002, -3.761538e-003, 2.133139e-002, 4.107185e-002, 5.304076e-002, 1.196575e-001, 2.457235e-002, -3.192201e-002, -3.582315e-002, 4.348274e-002, 4.934884e-002, 2.782864e-002, 1.080956e-002, 1.352327e-002, 2.240174e-002, 2.255998e-002, -1.027465e-002, -7.378908e-002, 3.777349e-002, -1.469693e-002, -2.394307e-002, -1.702185e-002, 9.254515e-003, 1.941239e-002, 7.954774e-003, 6.014269e-003, 4.830026e-003, -7.536831e-003, 2.807919e-002, 3.885909e-002, 5.112330e-002, -1.832909e-003, 2.351664e-003, -8.770857e-003, 8.230207e-005, 6.023084e-003, 1.049950e-002, 9.668805e-003, 2.197142e-003, 2.892245e-002, 5.119395e-002, 3.477359e-002, 1.935274e-002, 3.884744e-003, -1.432005e-002, -1.898047e-003, 2.438523e-003, 5.212552e-003, 7.323926e-003, 1.298012e-002, 2.269752e-002, 2.976808e-002, -5.289523e-003, 3.028365e-002, -4.692092e-003, -1.116895e-002, 3.337244e-002, 3.337244e-002, -1.116895e-002, -4.692092e-003, 3.028365e-002, -5.289523e-003, -7.126478e-002, -1.855898e-003, 8.097706e-002, 2.751164e-002, -1.855216e-002, -1.549980e-002, -2.187067e-002, 3.698245e-003, -4.745747e-002, -3.500319e-002, 5.823483e-002, -7.686154e-002, 4.148716e-002, 6.399500e-002, 5.739908e-002, 4.222428e-002, 1.942471e-002, 3.922370e-002, 3.845147e-002, 5.841064e-002, 7.862288e-002, -1.638576e-002, -1.136722e-001, -1.060218e-001, -1.706679e-003, 1.101270e-002, 5.978111e-003, 1.493184e-002, 2.407317e-002, 3.214877e-002, 2.450773e-002, -5.226240e-002, 2.937445e-002, 6.813105e-003, -3.095562e-002, 1.975911e-002, 2.990393e-002, 1.205924e-002, 1.511854e-002, 1.379757e-002, -1.248368e-002, -2.760432e-002, -2.236861e-002, -1.125631e-001, 1.545317e-002, 3.589978e-003, -4.785697e-003, 1.264420e-002, 2.759638e-003, 7.248237e-003, 4.318942e-003, 4.013257e-003,


© ISO/IEC 2004 — All rights reserved

Copyright International Organization for Standardization
Provided by IHS under license with ISO
No reproduction or networking permitted without license from IHS
Not for Resale

2.882496e-003, -4.527541e-003, 1.600351e-002, 4.227105e-002, 1.620104e-002, 4.166987e-005, 8.201060e-003, 1.414478e-003, 1.967576e-003, -3.544611e-003, -4.335184e-003, 7.770962e-003, 6.039267e-003, 3.947369e-002, -3.732075e-004, 1.170570e-002, 1.737982e-002, -2.336394e-003, -4.505687e-003, -2.435413e-002, -2.435413e-002, -4.505687e-003, -2.336394e-003, 1.737982e-002, 1.170570e-002, 2.720937e-002, -1.034044e-002, -2.353795e-002, 1.626935e-002, 5.336910e-002, 2.334751e-002, -1.156965e-002, 2.672690e-002, 2.374898e-002, 3.722333e-002, -9.059006e-002, -8.270751e-002, 9.341816e-003, -1.046914e-002, 2.377755e-004, -2.018554e-003, 2.381305e-002, -4.034219e-004, -6.031159e-003, -5.697352e-002, -9.452060e-002, 6.816566e-002, 8.657067e-002, 2.849887e-002, -1.198975e-002, 1.069931e-003, 2.918536e-003, 7.861094e-003, 4.923960e-003, -4.666103e-003, 1.486603e-002, 7.087356e-003, 5.201979e-002, -3.866793e-002, 6.393513e-002, 1.964737e-002, -1.158778e-002, -3.837334e-004, 5.897360e-003, -1.019687e-002, -1.950676e-002, -1.814108e-003, 4.740439e-002, 3.108657e-002, -4.872180e-002, 3.717166e-002, 3.755668e-002, -8.375493e-003, -8.871582e-003, -2.617937e-003, -9.744206e-003, -1.140275e-002, -8.855049e-003, 1.314294e-002, -2.956187e-003, -6.917617e-002, 3.957788e-003, 1.941737e-002, 4.126548e-003, -6.508959e-003, -8.409540e-003, -4.105557e-003, -1.890865e-003, 3.736435e-003, 1.115699e-002, 1.102152e-002, -3.267107e-002, -9.521083e-003, -2.052409e-002, 6.512547e-003, 1.399602e-002, 2.867250e-002, 2.867250e-002, 1.399602e-002, 6.512547e-003, -2.052409e-002, -9.521083e-003, 4.318230e-002, -9.678859e-002, 3.974338e-002, -1.011039e-003, -2.189468e-002, 1.993488e-002, 1.888969e-002, 1.006183e-002, 8.208102e-002, -2.618987e-002, -5.158494e-003, -8.954478e-002, 1.285494e-001, -9.831209e-002, -7.735134e-002, 2.461580e-002, 1.491361e-002, 1.233488e-002, 1.593112e-002, 2.964211e-002, 4.624119e-002, 1.130005e-002, -4.769784e-002, 2.987506e-002, -4.979156e-002, -1.249773e-002, -1.621439e-002, -5.601211e-003, 7.254425e-003, 4.261965e-003, -7.105728e-003, -4.482521e-002, 4.822163e-003, -3.518037e-002, 3.197704e-002, 2.892463e-003, -1.303646e-002, -1.572759e-002, -5.724965e-003, -4.214468e-003, -1.729535e-002, -1.992932e-002, 4.929484e-003, 4.940314e-002, -3.728941e-002, -1.837763e-002, -9.331271e-003, -1.791225e-002, -1.991748e-002, -1.333518e-002, -1.102460e-002, -2.416363e-002, -6.794682e-003, 2.102766e-002, 3.894443e-003, -2.553947e-002, -6.039497e-003, -9.470983e-003, 8.512087e-004, -9.269446e-003, -4.472494e-003, -8.932805e-003, -8.103331e-003, 5.780305e-003, 2.706123e-003, 1.394177e-002, 2.079714e-002, -5.708525e-002, 3.027474e-002, 3.027474e-002, -5.708525e-002, 8.159421e-002, 6.271381e-002, 1.930225e-002, 5.514973e-004, 3.767442e-002, 3.580575e-002, 1.121119e-002, 9.715107e-004, 3.055607e-003, 1.805836e-002, 5.964377e-002, -1.536177e-001, -4.880746e-002, -4.880746e-002, -1.536177e-001, -2.742923e-002, -8.004694e-002, -9.727647e-003, 2.287383e-003, -1.599931e-004, 8.518535e-003, -2.241377e-002, -5.029511e-003, 3.365541e-003, -2.360274e-003, -8.177742e-002, -1.788274e-002, 4.917411e-004, 4.917411e-004, -1.788274e-002, 9.249939e-002, 1.288351e-002, 1.030636e-002, 1.408789e-002, 9.131987e-003, 3.519621e-002, 5.099216e-003, 9.349799e-004, -1.726524e-003, -3.076338e-003, -2.605550e-002, -9.404455e-003, -7.497636e-003, -7.497636e-003, -9.404455e-003, 6.896498e-002, -1.494397e-002, -1.332529e-003, 5.661215e-003, 1.860376e-003, 3.746364e-002, -4.271134e-003, 5.386368e-003, -1.151581e-002, -2.794647e-002, -3.269551e-003, -4.240644e-002, -4.365999e-002, -4.365999e-002, -4.240644e-002, 7.425615e-002, 5.624677e-002, 9.319396e-003, 3.195885e-002, 6.907460e-002, -2.722559e-003, -3.358350e-003, 1.158056e-002, 4.599345e-003, 1.262624e-002, -7.578804e-002, 1.132831e-001, 2.039071e-002, 2.039071e-002, 1.132831e-001, 1.206011e-001, 1.024473e-002, -2.541855e-003, 6.125944e-003, 2.067278e-002, -2.780469e-002, -4.808371e-003, 2.972906e-003, 4.370126e-003, -1.815693e-002, 1.317881e-001, 8.389719e-002, 9.852986e-003, 9.852986e-003, 8.389719e-002, 6.693103e-002, 5.031887e-002, 1.159659e-002, 1.632761e-002, 4.100416e-002, -6.677587e-002, 2.836735e-003, -4.995235e-004, -4.130410e-003, -1.058470e-002, 5.812861e-003, -2.786057e-002, -2.641301e-002, -2.641301e-002, -2.786057e-002, 6.280406e-002, 6.874963e-002, 3.905573e-002, 4.784570e-002, 8.451309e-002, -1.053519e-003, 1.679083e-002, 1.158536e-002, 1.200438e-002, 8.388580e-003, -3.901079e-002, -3.060945e-002, 2.082422e-002, 2.082422e-002, -3.060945e-002, -9.723268e-002, -4.084608e-002, 3.135570e-003, -1.234182e-002, -6.266514e-002, -3.352558e-002, -1.113624e-002, 1.636236e-005, -1.308816e-002, -2.072750e-002, 4.398631e-002, 3.886086e-002, -1.565717e-003, -1.565717e-003, 3.886086e-002, 4.184358e-002, 3.760651e-002, 1.095031e-002, 1.294823e-002, 2.276038e-002, 4.116687e-002, 1.911757e-002, 7.839764e-003, 3.986380e-003, 2.883041e-002, -9.641690e-002, 7.651486e-002, 1.176008e-002, 1.176008e-002, 7.651486e-002, 5.487499e-002, 1.442605e-002, 8.951118e-003, 1.552897e-002, 3.062382e-002, 3.196463e-002, 1.072982e-002, 4.560553e-003, -4.502866e-004, 1.800960e-002, 1.422105e-002, -1.141739e-003, 1.362995e-002, 1.362995e-002, -1.141739e-003, -3.837934e-002, -4.083437e-002, -4.312928e-003, 4.128002e-003, -1.812349e-002, -8.950253e-003, -4.513635e-003, -4.671775e-003, 5.914257e-004, -9.324047e-003, 4.956611e-003, 2.026326e-002, -4.407603e-002, -4.407603e-002, 2.026326e-002, 4.073656e-002, -3.400869e-002, 5.589569e-003, -2.862013e-003, 5.310844e-002, 8.075385e-003, -2.326459e-003, -1.386772e-002, 1.124615e-003, 5.943381e-003, -1.030533e-002, 1.034652e-002, 1.394829e-002, 1.394829e-002, 1.034652e-002, -1.345870e-002, -4.337978e-003, 1.319964e-003, -1.731981e-002, -6.410213e-002, -2.099719e-002, 7.352762e-003, 5.884176e-003, -5.213043e-003, 8.234820e-003, 2.544579e-002, 1.026275e-002, 1.012838e-002, 1.012838e-002, 1.026275e-002, -3.808207e-002, -

© ISO/IEC 2004 — All rights reserved


Copyright International Organization for Standardization
Provided by IHS under license with ISO
No reproduction or networking permitted without license from IHS
Not for Resale

3.969154e-002, -1.475071e-002, -3.502097e-003, -2.164272e-003, -3.847607e-002, -1.614633e-002, -9.969374e-003, 9.308422e-006, -8.315789e-005, 2.407899e-002, 3.616859e-002, 5.342564e-003, 5.342564e-003, 3.616859e-002, 1.292644e-002, 8.114339e-003, -1.286812e-002, -6.574756e-003, -3.880955e-002, 9.157317e-003, -6.242195e-003, 2.037742e-003, -9.593587e-003, 2.575466e-003},
{1.011842e-003, 6.428062e-003, -1.664048e-002, 7.782057e-003, 9.351581e-003, -7.668155e-003, 3.499223e-003, 1.754338e-004, -6.603064e-003, 7.013308e-003, -2.620985e-002, 1.486511e-002, -2.620985e-002, 7.013308e-003, -6.603064e-003, 1.754338e-004, 3.499223e-003, -7.668155e-003, 9.351581e-003, 7.782057e-003, -1.664048e-002, 6.428062e-003, 1.183667e-002, 2.053902e-003, -2.266113e-002, 1.623004e-002, 5.719957e-003, -1.899390e-002, -2.440551e-003, 1.591511e-002, -3.048205e-002, -1.653612e-002, 7.078479e-003, -3.859472e-002, -1.186086e-002, -1.647331e-002, -1.121677e-002, -3.074746e-002, -5.280480e-003, 3.784396e-003, 2.187322e-002, -2.566613e-002, -2.415471e-002, -2.236175e-003, 6.244660e-003, -2.111007e-003, -1.457969e-002, -1.846412e-002, 3.639795e-002, -4.918118e-003, -1.724356e-002, 2.587586e-002, 1.395053e-002, 6.152082e-003, 4.452244e-002, 2.605293e-003, -9.855560e-002, 9.352651e-005, -2.417512e-002, 2.636089e-002, 1.415180e-002, 1.685673e-002, 2.236494e-002, -1.405675e-002, -1.947764e-002, -1.630933e-004, 2.621904e-002, -1.624616e-003, 3.922633e-002, 2.997246e-003, 1.259424e-002, -9.393391e-003, 4.482125e-004, 2.041743e-002, 1.152263e-002, 4.433630e-002, -1.389266e-002, -5.354859e-002, -4.014528e-002, -3.706120e-003, -5.576333e-002, -2.128415e-002, -1.733435e-002, -2.498498e-002, 6.443364e-002, 1.944631e-002, 3.436852e-002, 1.048805e-002, 3.299392e-002, -1.289123e-002, -3.305574e-002, -1.456042e-002, 1.184900e-002, -9.250484e-002, -6.299358e-002, -5.645508e-002, -4.484901e-003, -3.658296e-002, 2.003673e-002, -2.089878e-002, 9.179769e-003, -2.265298e-002, -6.785127e-003, -1.235543e-003, -3.842427e-002, -1.401361e-003, 3.306283e-002, 2.626748e-002, -1.402196e-002, 1.216822e-002, -2.549786e-002, 1.137399e-002, -7.188747e-004, -3.188184e-002, 8.284867e-002, 1.934016e-002, -1.432427e-002, -7.010167e-003, -1.040506e-001, -4.054547e-002, -4.623474e-002, -3.813755e-002, -5.381710e-002, -1.626354e-002, -3.359581e-002, -1.609498e-002, 5.767810e-002, -1.573529e-002, -5.513024e-003, -8.166018e-002, -2.700886e-002, 2.289561e-002, 9.851889e-003, -1.133210e-002, 9.660783e-002, 2.439494e-002, 2.641940e-002, -1.783038e-002, 3.339187e-003, 6.206757e-002, -4.267920e-002, -3.200921e-002, -2.710880e-003, -1.376396e-002, -3.425755e-002, -3.776073e-002, 7.075090e-002, 3.347581e-002, 7.568128e-002, -4.194503e-002, 1.952419e-002, -3.264794e-002, -7.114986e-003, 2.024630e-002, 1.294249e-002, -8.448631e-003, -7.668949e-003, 2.057907e-002, -4.293577e-003, -1.216731e-002, 1.132799e-003, 1.849741e-002, -1.154539e-002, 3.248112e-003, 1.970920e-002, -2.613420e-002, 1.584523e-003, 5.218222e-002, 2.555196e-002, -1.157884e-002, -3.740565e-002, -6.724355e-002, -1.151118e-003, 1.415349e-002, -3.548224e-002, -3.507946e-002, 2.611778e-002, 1.715318e-002, 2.426036e-002, -8.470365e-003, -6.589469e-003, 5.031850e-002, 4.819723e-002, 7.277221e-002, 2.625893e-002, -2.763038e-002, -8.724881e-003, -1.112896e-002, -2.202171e-002, -4.405031e-002, 1.872347e-002, 4.625896e-002, 1.361368e-002, 6.179729e-003, -2.124052e-002, -1.075051e-003, 1.846849e-002, -1.816899e-002, 1.124415e-002, -3.179550e-002, -8.887963e-002, 2.004821e-002, -2.669236e-002, 6.728011e-003, 1.895699e-002, 2.138363e-002, -3.696142e-002, -1.175538e-002, -7.110984e-003, -2.725129e-003, 2.852272e-003, -3.641531e-002, 1.269948e-002, 1.681620e-002, -1.887563e-002, 8.950136e-003, -1.875542e-002, 2.177606e-002, -3.923761e-002, -3.316961e-002, -9.774533e-003, 3.569408e-002, -2.543824e-003, -8.780471e-002, -3.203409e-002, -7.948152e-002, -1.093235e-002, -8.852072e-004, -4.619340e-003, -7.856152e-003, -1.776887e-002, -2.549507e-002, -1.656737e-002, -1.053111e-002, -1.247720e-002, -1.046460e-002, 4.352447e-003, -2.245730e-002, -2.425024e-002, 7.251973e-003, 3.732758e-003, 1.717970e-004, -5.521884e-002, 5.163345e-003, -1.100713e-001, -2.893024e-002, -4.860090e-002, -5.853513e-002, -2.676303e-002, -6.774004e-003, -8.994331e-003, -5.405199e-004, -2.922928e-003, -1.109672e-002, 6.174603e-004, -3.517442e-003, 6.222575e-003, 8.429896e-003, 1.263799e-002, 2.990867e-002, -4.184879e-002, -1.078418e-002, -8.632164e-003, 6.908964e-003, 6.132486e-002, -8.513192e-002, 1.109797e-002, 1.937284e-002, 1.850765e-002, -3.688025e-002, -2.639789e-002, -2.983636e-002, -1.938540e-002, -1.443826e-003, 1.974667e-003, -7.932514e-003, -3.937003e-003, 1.111952e-002, 1.006098e-002, -7.587177e-003, -2.034725e-002, -3.220843e-002, -7.730373e-003, -5.049775e-003, 8.246804e-002, -1.097334e-002, -8.967987e-002, 3.021897e-002, -1.983803e-002, -7.508311e-002, -2.160821e-002, -4.136845e-002, -3.362416e-002, -1.710991e-002, -8.279606e-003, 4.227108e-003, 2.700054e-003, -4.339267e-003, 1.434179e-002, -6.358727e-003, 3.259414e-003, 6.421053e-003, -1.871917e-003, 1.901791e-002, -8.474540e-003, -3.441394e-002, -5.980620e-003, 4.040365e-002, -1.206425e-002, 3.291736e-003, 5.282462e-002, -9.456672e-003, 2.500660e-002, -1.936516e-002, -1.936516e-002, 2.500660e-002, -9.456672e-003, 5.282462e-002, 3.291736e-003, -7.806621e-002, 7.556269e-002, -6.307952e-003, -3.337368e-002, -1.403370e-002, -1.810421e-002, -1.282993e-002, 3.828334e-002, 4.379385e-002, -1.172075e-001, -1.146087e-002, 8.526436e-002, 9.928129e-002, -1.136983e-002, -2.562028e-002, -3.787938e-002, -2.078807e-002, -2.887742e-002, -4.511271e-002, -1.994704e-002, -6.470330e-002, 6.896829e-002, 8.056049e-002, -1.362985e-002, 5.263859e-002, 2.817436e-002, -3.201796e-002, -2.121568e-002, -1.901512e-002, -1.999040e-002, -1.787765e-002, 1.177111e-002, -4.671631e-003, -2.902892e-002, 2.748355e-002, 3.801891e-003, 7.034274e-003, -5.009695e-004, -1.363610e-002, -1.159429e-002, -1.441111e-002, -


© ISO/IEC 2004 — All rights reserved

Copyright International Organization for Standardization
Provided by IHS under license with ISO
No reproduction or networking permitted without license from IHS
Not for Resale

2.040654e-002, -8.183253e-003, 1.137201e-001, -4.763447e-002, -4.290890e-003, -3.889520e-002, -4.150421e-002, -1.041139e-003, -6.864295e-003, -1.389453e-002, -1.878750e-002, -1.031794e-002, -7.074584e-003, 1.512459e-002, 6.767134e-003, 3.846043e-002, -1.639455e-002, -3.772662e-002, -1.073470e-002, -4.343743e-005, -8.717828e-003, -9.504634e-003, -2.459179e-003, -6.823826e-003, -1.423171e-002, -4.778946e-003, 2.063747e-002, 4.672843e-002, -2.343672e-002, 3.989103e-002, -4.192189e-002, -4.192189e-002, 3.989103e-002, -2.343672e-002, 4.672843e-002, 2.063747e-002, 3.396411e-002, 9.948349e-002, -1.042585e-001, -2.741755e-002, 1.226401e-002, 1.237459e-002, 2.796814e-002, 4.877475e-002, -7.761966e-003, -4.841029e-003, 1.189036e-002, 3.741892e-002, 8.495419e-002, -1.279529e-002, -3.892243e-002, -9.801135e-003, -1.704203e-002, -2.829870e-002, 2.334526e-002, 5.138512e-002, -4.919374e-002, -4.239640e-002, -3.462642e-002, -1.607367e-002, 1.486163e-002, -1.404380e-002, -1.457499e-002, -9.462874e-003, -1.945057e-002, -9.761538e-003, 1.453936e-002, -2.871381e-002, -7.222978e-002, 6.179703e-003, 9.546863e-002, -2.709806e-002, -1.282308e-002, -1.155784e-002, -8.444555e-003, -2.162005e-002, 3.032573e-003, -2.888190e-002, -1.381489e-002, 4.668204e-002, -1.040642e-001, 9.059471e-003, -2.112791e-002, -2.325433e-002, -1.895859e-002, -7.428828e-003, -2.229184e-002, -3.113408e-002, -2.158622e-002, -1.242041e-003, 4.917644e-003, -4.443743e-002, -4.341873e-002, -8.553724e-004, -8.658769e-003, -7.827578e-003, -4.432732e-003, 1.336589e-003, -6.393292e-003, -1.923883e-002, -2.672969e-002, 2.437657e-002, -2.816732e-003, 8.483196e-003, -4.987799e-002, 4.241181e-003, 1.622318e-002, 1.115308e-002, 1.115308e-002, 1.622318e-002, 4.241181e-003, -4.987799e-002, 8.483196e-003, -9.899614e-003, 1.727604e-002, 5.897162e-002, -6.006654e-002, -2.460894e-002, -4.808532e-003, -9.838548e-003, -3.040491e-002, 6.747645e-002, 4.137060e-002, -3.724880e-002, -1.097499e-001, 3.094195e-002, 4.142366e-002, -7.427464e-003, -2.515375e-002, -8.329078e-004, -8.754549e-003, -1.776698e-002, -1.507507e-002, 6.044126e-003, 8.135618e-002, 5.358215e-002, 6.011349e-002, 4.797212e-002, 3.801089e-002, -3.101849e-002, -9.935219e-005, -4.857710e-003, 1.389614e-002, -1.331260e-002, -4.609645e-002, 5.251834e-003, -7.817150e-003, 2.079158e-002, 2.297721e-002, 1.468298e-002, -1.830239e-004, -6.058533e-003, -7.483243e-003, 1.460378e-003, -2.224477e-003, 2.656511e-002, -8.464575e-003, -4.466062e-002, -3.988281e-002, -1.258927e-002, 1.210334e-002, 9.336642e-004, -6.397916e-003, 2.588758e-003, 3.046364e-003, -1.531204e-003, -1.322277e-003, 3.832363e-002, 2.741118e-002, 4.324679e-003, 2.358994e-004, 3.053565e-003, -6.568110e-004, -3.980576e-003, 3.092328e-003, -5.724646e-003, -6.077643e-003, -6.124888e-003, 6.262454e-003, 2.067177e-002, 5.794566e-003, -5.924759e-002, 1.286279e-002, 1.634672e-002, 4.587829e-002, 4.587829e-002, 1.634672e-002, 1.286279e-002, -5.924759e-002, 5.794566e-003, -3.071113e-002, -5.148710e-002, -4.387479e-002, 5.994511e-002, -3.406677e-002, 1.016535e-002, -4.846836e-002, -8.602272e-002, -2.417091e-002, 5.067778e-002, 8.453196e-002, 5.876359e-002, 1.330392e-001, -8.190838e-002, 9.928022e-002, 7.421577e-002, 4.200694e-002, -1.225054e-003, -1.342676e-002, 3.718307e-002, 5.794602e-002, 2.933164e-002, -8.198902e-002, -4.960673e-002, -4.686824e-002, 3.738630e-002, -9.156736e-004, 1.484088e-002, -5.974483e-003, 2.108182e-002, 5.954607e-002, -4.520913e-004, -5.758317e-002, -2.457677e-002, -1.880375e-002, -2.475131e-002, -1.089017e-004, 2.322083e-003, 8.965663e-003, 5.245368e-003, 2.498574e-002, 2.052587e-002, -2.545285e-002, 8.968842e-003, -1.648931e-002, 2.171460e-002, -2.440229e-002, 1.784946e-003, -5.322807e-003, -2.574979e-003, 4.997206e-003, 2.496557e-002, 1.510126e-002, -2.248014e-002, -4.240765e-002, 3.396599e-002, -1.456124e-002, -1.260584e-002, -1.722302e-002, -9.196061e-003, -1.893227e-003, 4.850731e-003, 1.583368e-002, 1.835882e-002, -6.394631e-003, 2.132428e-002, -7.213926e-003, 1.374677e-002, 1.396290e-002, 1.396290e-002, 1.374677e-002, 4.340148e-002, 1.891696e-002, -6.122861e-004, 1.649872e-002, 5.730369e-002, 4.999864e-004, 2.649888e-002, -9.000565e-003, -1.681457e-003, 1.941572e-002, -7.522621e-002, -5.513232e-002, -1.908666e-002, -1.908666e-002, -5.513232e-002, -1.821089e-002, -1.178637e-002, -1.016912e-002, -1.127601e-002, -3.560942e-002, -8.731665e-002, -1.383455e-002, -1.091753e-002, -8.283003e-003, -1.245438e-002, 1.267546e-001, 1.367640e-002, 1.237959e-002, 1.237959e-002, 1.367640e-002, -1.485401e-001, -1.360106e-002, -5.296071e-003, -1.557091e-003, -4.049215e-002, -1.087178e-001, -5.887818e-003, -8.708998e-004, -7.504204e-003, -2.654194e-002, 3.012647e-002, -2.704713e-002, 5.005034e-002, 5.005034e-002, -2.704713e-002, 8.575316e-002, 2.754555e-002, 9.840432e-003, 1.875860e-002, 1.399597e-002, 3.417747e-002, 6.396440e-003, -2.500958e-004, -3.073960e-003, 1.283933e-002, 4.930990e-002, -3.313809e-002, -3.673699e-002, -3.673699e-002, -3.313809e-002, -1.070056e-001, -3.464047e-002, -1.529484e-002, -3.475752e-002, -4.642147e-002, -2.474109e-002, -6.514690e-003, -8.972458e-003, -1.471989e-002, -1.298222e-002, 2.106598e-002, -6.690485e-002, -8.950081e-003, -8.950081e-003, -6.690485e-002, -1.091078e-001, 6.972363e-003, -2.290297e-004, -7.191755e-003, -3.501405e-002, 6.642511e-002, 8.160194e-003, 2.800008e-004, -1.979259e-003, 1.120694e-002, -4.647939e-002, -4.628037e-002, -9.836495e-004, -9.836495e-004, -4.628037e-002, -1.218314e-001, -1.240218e-002, -8.426923e-003, -4.451625e-003, -2.564902e-002, 7.378002e-002, 5.056588e-004, -2.884866e-004, 3.691640e-003, 9.895079e-003, -1.151807e-001, -5.047373e-002, -3.222715e-002, -3.222715e-002, -5.047373e-002, -3.414448e-002, 2.246181e-003, -2.560750e-003, 1.678885e-002, -1.655634e-002, 9.831261e-003, -3.856328e-003, -6.808235e-003, 3.242666e-003, -1.079471e-002, 4.845294e-003, 4.404015e-004, -3.321179e-002, -3.321179e-002, 4.404015e-004, -1.415214e-001, -2.894239e-002, -9.220278e-003, -

© ISO/IEC 2004 — All rights reserved


Copyright International Organization for Standardization
Provided by IHS under license with ISO
No reproduction or networking permitted without license from IHS
Not for Resale

3.109357e-002, -9.252306e-002, -4.821617e-002, -1.809805e-002, -2.651451e-003, -7.779645e-003, -1.804883e-002, -5.547773e-003, 3.050595e-002, 3.794322e-003, 3.794322e-003, 3.050595e-002, 7.658529e-002, 1.763174e-002, 2.277908e-003, -6.196227e-004, -3.589052e-003, 1.240730e-002, 2.582357e-003, 1.706377e-005, -1.159438e-003, 5.114287e-003, 2.800347e-002, -3.242841e-002, -3.607517e-003, -3.607517e-003, -3.242841e-002, 6.179111e-002, 1.867340e-003, -4.105826e-003, -2.200640e-003, 1.792072e-002, 4.005597e-004, -4.075045e-003, 2.147712e-003, -1.762658e-003, -4.695914e-003, 4.095140e-002, 8.807854e-003, -3.117725e-002, -3.117725e-002, 8.807854e-003, 1.083470e-002, 2.695250e-002, 3.064163e-002, -6.327065e-003, 3.573972e-002, -1.632670e-002, 6.769683e-004, -1.213000e-003, 5.902751e-003, 7.843056e-003, -2.007611e-002, 2.445336e-002, 1.783458e-003, 1.783458e-003, 2.445336e-002, -1.610732e-002, 4.454143e-002, -1.935050e-002, 2.064649e-002, 9.485669e-002, 1.046893e-002, 2.894084e-002, 8.465774e-003, 9.420711e-003, 1.126841e-002, 1.796186e-002, -5.418039e-003, -1.153492e-002, -1.153492e-002, -5.418039e-003, 1.657857e-002, -3.407078e-003, -1.966999e-003, 1.107235e-003, 1.886508e-003, -1.289772e-002, -2.666561e-004, -5.111592e-003, 1.062430e-003, -1.199549e-002, 4.780939e-004, 1.669225e-002, -3.471069e-003, -3.471069e-003, 1.669225e-002, 3.404976e-002, 1.653759e-004, -7.531126e-003, -2.934734e-003, -3.776554e-004, -1.909965e-002, -3.374030e-002, -6.794293e-003, 4.057877e-004, 1.360444e-004, -4.876120e-002, 4.703969e-002, 2.763112e-002, 2.763112e-002, 4.703969e-002, -7.990492e-002, 3.301628e-002, 3.854609e-002, -1.412096e-002, 2.689704e-002, -3.504754e-002, 7.466706e-003, 1.678791e-002, 1.927536e-002, -6.369242e-003},
{-7.325982e-004, 2.875280e-003, 1.152665e-003, -1.425355e-003, -1.251501e-002, 7.469575e-003, 3.129927e-003, -1.994497e-003, -2.434624e-002, 2.567560e-002, -1.686675e-002, 9.896640e-003, -1.686675e-002, 2.567560e-002, -2.434624e-002, -1.994497e-003, 3.129927e-003, 7.469575e-003, -1.251501e-002, -1.425355e-003, 1.152665e-003, 2.875280e-003, -1.001729e-002, -2.290344e-002, -5.887611e-003, -6.701999e-003, 3.491725e-002, 1.892899e-003, 2.887329e-002, 3.442137e-002, -1.672587e-003, 3.744506e-002, -2.145205e-002, -4.865546e-003, 2.662692e-002, -2.565169e-002, 2.834240e-003, 2.719212e-002, -9.629305e-004, -7.417891e-003, 8.783063e-003, -4.777478e-003, -1.449810e-002, -2.724780e-002, 2.128193e-002, 3.944507e-002, -2.843651e-002, -1.386227e-002, 6.627922e-003, 9.403791e-003, -7.477560e-003, 2.313710e-002, -1.662368e-002, -4.929643e-002, -8.382669e-002, -3.478571e-002, 2.377887e-002, -2.353069e-002, 9.803200e-003, 3.137085e-002, 1.638985e-002, 1.005002e-003, 9.047288e-004, 6.348082e-003, -2.473972e-002, -3.029970e-003, -2.653605e-002, -1.564734e-002, -1.704634e-003, -2.545293e-002, -6.405897e-003, -2.848388e-003, 2.764083e-002, -7.993296e-003, 2.687643e-003, -1.244057e-002, 2.912209e-002, 3.422142e-002, 3.577908e-002, 7.958045e-003, 5.992011e-005, 2.989110e-002, 5.620520e-002, -6.580831e-003, 3.372278e-003, -2.047848e-003, -1.403225e-002, -1.972244e-002, -6.723070e-003, -2.575904e-002, 3.838627e-003, -5.306606e-003, -1.086852e-004, -6.758302e-003, -1.562519e-002, 1.543305e-002, 2.632614e-002, 2.002311e-003, 5.527076e-002, 2.959645e-002, 5.453808e-002, -3.934171e-003, 6.695314e-002, 2.182311e-002, 2.418926e-002, 2.767703e-002, 5.065047e-002, 9.714299e-003, -6.249875e-002, 2.616959e-002, 2.070186e-002, -1.104149e-002, -1.587693e-002, -1.357708e-002, -2.825088e-002, -2.709354e-002, -3.521233e-002, -3.330956e-002, 3.455850e-003, 6.337384e-002, -5.667983e-003, 3.417864e-002, 4.843442e-002, 8.385821e-002, 1.290527e-002, -4.025427e-002, -1.181016e-002, -2.957455e-002, -1.832890e-002, 1.808490e-002, 3.107349e-003, -1.756455e-002, -1.277415e-002, -4.127834e-002, -6.245290e-004, 2.600915e-002, -6.067055e-002, -2.049726e-002, -3.088104e-002, -2.894758e-002, 5.188890e-002, 6.247170e-002, 5.758533e-002, -1.388821e-002, -1.875708e-002, 6.894217e-003, -8.698983e-003, 1.090031e-002, 9.204439e-003, -4.598837e-002, -1.595462e-002, 5.928940e-002, 3.777504e-002, 1.427663e-002, 2.279839e-003, 9.248079e-003, 1.848537e-002, 9.799212e-003, -1.612446e-002, -2.721349e-002, 4.954562e-003, -1.899761e-002, 4.015639e-002, 3.522977e-002, 2.199585e-003, 3.502205e-002, 2.629306e-002, 3.351246e-002, 1.222477e-002, -2.594403e-002, 2.741546e-002, 5.855867e-002, 4.392705e-002, -2.791774e-002, 1.372446e-002, 2.540815e-002, 5.313055e-002, -1.899145e-002, 5.905322e-002, 2.238243e-002, -2.445451e-002, 1.739993e-002, 4.367462e-002, -7.954328e-003, -1.504140e-002, 2.168065e-003, -6.205025e-003, 2.048033e-002, 5.072078e-003, 5.771753e-003, -2.307522e-002, -3.493290e-002, -1.104702e-002, -6.474044e-002, 5.892402e-003, 1.379755e-002, -4.390996e-002, -2.186462e-002, -2.306568e-002, -2.624847e-002, -2.396909e-003, 1.276354e-002, 2.613568e-003, -7.373000e-002, 3.192169e-002, 7.071139e-003, -3.968875e-003, 2.797976e-004, -3.175284e-003, 6.229440e-003, -1.182184e-002, 6.428568e-003, -1.126261e-002, 5.353624e-003, -3.340460e-002, -4.581872e-002, 1.367128e-002, -2.236690e-002, -4.240673e-003, -5.829632e-002, 4.445232e-002, 2.109198e-002, -3.937950e-003, -3.024245e-002, 3.428023e-002, -7.556922e-003, -7.717891e-002, -1.695299e-002, -1.184144e-002, 3.098862e-002, -1.314854e-003, 2.126210e-002, 2.645406e-002, 1.279073e-002, -1.563181e-002, -1.423916e-002, 4.226607e-003, -2.803899e-002, -2.082001e-002, 3.249029e-002, 5.436191e-002, 9.272838e-002, 8.614380e-003, -1.606570e-002, -5.682286e-002, 2.706344e-002, -2.953126e-002, -7.909921e-002, -1.437518e-002, -1.914729e-002, -3.246216e-002, -1.436261e-002, 1.794620e-002, 7.869629e-003, 2.595392e-002, -1.103476e-003, 2.349792e-004, -2.229669e-002, -2.518851e-002, -9.098039e-003, -1.208691e-002, 5.053484e-002, 1.760178e-002, 4.124252e-004, -2.813195e-002, 4.396571e-002, 1.176808e-002, -5.370601e-002, 4.357053e-002, -2.576336e-002, -2.165339e-002, -1.001901e-002, -


© ISO/IEC 2004 — All rights reserved

--`,,```,,,,````-`-`,,`,,`,`,,`---
Copyright International Organization for Standardization
Provided by IHS under license with ISO
No reproduction or networking permitted without license from IHS
Not for Resale

1.952645e-002, 3.492258e-003, -1.028431e-003, -1.531807e-002, -2.010651e-003, 9.442310e-003, -1.616549e-002, -1.026614e-002, -1.712944e-002, -1.102519e-002, -7.475957e-003, -2.375917e-002, 1.692499e-002, 3.645250e-002, -2.975330e-002, 2.829595e-002, 7.258041e-002, 8.162681e-003, 3.607664e-002, -1.053961e-002, -1.533864e-002, -1.171181e-002, -5.449522e-003, -5.974078e-003, 6.312769e-003, -1.596114e-003, 9.265450e-003, -9.820756e-003, 9.362057e-003, -2.943596e-003, -1.226319e-002, 8.352614e-003, -1.613813e-002, 1.879190e-002, 1.102838e-002, 2.536117e-002, -9.448837e-003, 7.059163e-004, -1.149953e-002, 6.663863e-003, 2.287531e-002, 3.367758e-002, 3.367758e-002, 2.287531e-002, 6.663863e-003, -1.149953e-002, 7.059163e-004, 6.019559e-003, 6.877465e-002, -1.659931e-002, -1.128093e-002, -8.581258e-003, 1.170372e-002, -4.803387e-003, 4.317709e-002, 5.009662e-002, 5.985398e-002, 1.092716e-001, -4.140316e-002, -8.845931e-002, 3.889879e-002, -1.019005e-002, 4.386525e-002, 3.834091e-002, -1.933938e-002, -2.445980e-002, -2.847605e-002, -5.267482e-002, -4.638797e-002, 1.244892e-001, 4.569855e-002, -1.106856e-001, -4.044809e-002, 6.548519e-003, 2.865274e-002, -8.679764e-003, -1.002175e-002, 4.004765e-003, 2.338321e-002, 1.251032e-001, -6.236205e-002, -1.862395e-001, -1.479725e-002, -5.208946e-004, -1.083715e-002, -9.391026e-003, -9.245694e-003, -7.145423e-003, -1.205336e-002, 2.617850e-003, -2.427430e-002, -1.610276e-002, -1.097024e-001, -3.869335e-002, -2.173959e-002, -1.177683e-002, -6.857158e-004, -3.447301e-003, -6.010275e-003, 1.694869e-003, 1.617238e-002, -3.861868e-002, -5.030002e-005, -8.059173e-003, -2.213760e-002, -1.990676e-002, -3.641844e-003, -1.171110e-002, -1.392683e-003, -6.742735e-004, 2.823799e-003, -1.096447e-002, -2.444681e-002, -1.228389e-002, 1.056296e-002, -2.872270e-002, -2.349326e-002, 1.512654e-002, -1.890047e-002, -1.890047e-002, 1.512654e-002, -2.349326e-002, -2.872270e-002, 1.056296e-002, -3.564232e-003, 4.903649e-003, -6.075886e-002, 2.186664e-002, 1.700348e-002, 1.587046e-002, -2.117635e-002, -6.490631e-002, -1.595678e-002, 1.837238e-002, 8.960572e-002, 1.093521e-001, 5.540356e-002, -1.137338e-002, -2.194184e-002, -3.481301e-002, -2.536997e-002, 4.832668e-002, 8.181996e-002, 7.230949e-002, -7.017746e-002, -2.994999e-002, -8.152241e-002, 4.409370e-002, 2.625127e-002, 2.482629e-003, -9.308235e-003, -1.455365e-002, 1.140789e-002, 7.801070e-003, 1.384634e-002, 4.119906e-002, -1.913825e-002, -2.812726e-002, 4.971925e-002, 5.405735e-003, -6.192427e-003, 9.086101e-003, -8.665582e-003, 1.120524e-002, -2.033388e-002, -4.543178e-002, 7.295280e-003, -1.883675e-001, -6.569909e-003, -3.026137e-002, 1.566748e-002, -1.064214e-002, -5.416276e-003, 4.827938e-004, 9.113483e-003, -1.318525e-003, -3.449705e-002, 8.068105e-003, -4.443855e-002, -4.423998e-002, -4.794964e-002, 2.367711e-002, -2.947875e-003, -7.797116e-004, 4.374596e-003, -4.608606e-003, -8.062526e-003, -2.483551e-002, 1.297815e-002, -4.167904e-002, 9.006767e-003, -4.373167e-003, -7.993523e-003, -9.462494e-003, 7.269670e-004, -1.497495e-002, -1.497495e-002, 7.269670e-004, -9.462494e-003, -7.993523e-003, -4.373167e-003, -9.432584e-004, -1.740762e-002, -9.538969e-002, 1.054307e-001, 4.759591e-002, 8.841057e-004, -1.131035e-002, -1.052169e-001, 1.554047e-002, -2.868851e-002, -3.366880e-002, 5.990224e-002, 4.389736e-002, 2.020813e-002, 6.658658e-002, 6.562235e-002, 2.586495e-002, -5.722294e-003, -6.653660e-003, 1.956629e-003, -6.795461e-002, 1.599043e-002, -1.452149e-002, -1.809758e-002, 3.834618e-002, 3.463731e-002, 2.408204e-002, 2.474507e-002, -1.775311e-003, -3.214480e-002, -2.687557e-002, -1.588537e-002, 2.787120e-002, -3.470759e-002, 8.202752e-002, 5.504139e-003, 3.198756e-002, 2.324827e-002, 2.650875e-002, -2.140521e-004, 1.802357e-003, 1.034800e-002, -2.453752e-006, 6.840299e-002, 2.944074e-002, 3.922810e-002, -1.925933e-003, -3.956060e-003, 2.192549e-002, 2.743228e-002, 6.369177e-003, 6.682213e-003, 1.050393e-002, 2.619674e-002, 5.274091e-002, -2.635477e-003, 5.528318e-002, 5.636099e-003, -6.072118e-003, -9.236745e-004, 1.031054e-002, 8.232992e-003, 1.899044e-002, 2.232775e-002, 1.507316e-002, 2.418346e-002, 1.199336e-002, -9.438270e-003, 2.694016e-002, 3.013927e-003, 1.811486e-003, -3.281456e-002, -3.281456e-002, 1.811486e-003, 3.013927e-003, 2.694016e-002, -9.438270e-003, -2.000547e-002, 2.208568e-002, 2.220474e-002, -3.028831e-002, -8.941705e-002, -7.582316e-002, -1.263293e-002, 9.625389e-003, 1.870094e-002, -5.631799e-002, -4.806181e-002, 2.210788e-002, -2.680627e-002, 6.937207e-003, 3.246864e-002, -2.428698e-002, -2.434630e-002, 3.131044e-002, 5.193202e-002, -8.795876e-003, -5.686387e-002, 9.535655e-002, 8.239720e-002, -2.352082e-002, 1.137003e-001, 9.718442e-003, -1.130013e-002, 2.479550e-003, 2.341977e-002, 2.976416e-002, -6.388355e-003, 5.683914e-002, 6.768159e-002, -6.188676e-002, 1.592966e-001, 3.184394e-002, 2.820088e-002, 2.309786e-003, -8.503744e-004, 2.311861e-002, 1.521568e-002, 1.764345e-002, 5.552371e-002, 1.486736e-001, 5.481585e-002, 6.008697e-002, 5.508682e-002, 1.296461e-002, 3.599383e-003, 8.087263e-004, 1.659886e-002, 1.214609e-002, 1.172866e-002, 3.085925e-002, 5.329337e-002, 1.328666e-002, 5.345511e-002, 2.828173e-002, 1.298483e-002, 8.279909e-003, 3.909357e-003, 4.746237e-003, 1.298884e-002, 8.495341e-003, 3.938855e-003, 5.945181e-002, 4.262842e-002, -5.542719e-003, -2.289834e-002, -2.289834e-002, -5.542719e-003, -7.197545e-002, -2.988723e-002, -3.804823e-003, -1.182185e-004, 5.575380e-003, -2.778996e-002, -2.128216e-002, -1.703033e-002, -8.832256e-003, -6.361562e-003, -1.638145e-002, -3.340176e-002, -2.322685e-002, -2.322685e-002, -3.340176e-002, 3.561717e-003, 2.687977e-002, 2.517404e-003, 5.228353e-003, 6.985939e-003, -7.048281e-002, -2.515200e-002, -1.503183e-002, -7.213044e-003, -1.104194e-002, 1.635395e-002, -1.359097e-002, -8.727315e-003, -8.727315e-003, -1.359097e-002, 1.660626e-002, 1.142999e-003, 7.183922e-003, 9.532072e-003, 1.779635e-002, -

© ISO/IEC 2004 — All rights reserved


Copyright International Organization for Standardization
Provided by IHS under license with ISO
No reproduction or networking permitted without license from IHS
Not for Resale

8.583148e-002, -1.170042e-003, -7.531285e-004, -8.548167e-003, -1.582366e-002, 3.893987e-002, 1.357293e-002, -1.237061e-003, -1.237061e-003, 1.357293e-002, 3.749246e-002, 9.311545e-003, -2.979138e-003, 1.130420e-002, -8.255746e-003, -2.575887e-002, 4.302519e-003, -1.670091e-003, -8.300740e-003, -1.642229e-002, -1.248564e-002, 1.805751e-002, 2.683183e-002, 2.683183e-002, 1.805751e-002, -1.280068e-001, -5.151697e-002, 5.033247e-003, -3.763723e-002, -7.670041e-002, -2.309453e-002, -5.642730e-003, -6.151716e-003, -3.432519e-003, -1.985310e-002, -2.321017e-002, -4.434588e-002, 1.034548e-002, 1.034548e-002, -4.434588e-002, -7.712193e-002, 1.630289e-002, 1.508593e-002, 9.973204e-004, -3.641677e-002, 1.010580e-002, -1.905749e-002, 5.821023e-003, 8.064846e-004, 2.298043e-002, -4.421733e-003, -4.147369e-002, 8.228911e-003, 8.228911e-003, -4.147369e-002, -8.878508e-002, -2.408186e-002, 4.747243e-003, 1.697109e-002, 5.550370e-003, 3.625448e-002, 2.459059e-002, 4.391057e-003, 8.094160e-003, -3.173085e-003, -6.315598e-002, 4.124894e-002, 3.966512e-002, 3.966512e-002, 4.124894e-002, -8.736451e-002, -3.898157e-002, -3.989448e-002, 8.733917e-003, -3.487912e-002, -6.123019e-003, -1.528024e-002, -9.195261e-003, -3.544649e-003, 1.662968e-003, -2.070302e-002, 3.880340e-002, -4.230453e-002, -4.230453e-002, 3.880340e-002, -3.354527e-002, -6.620571e-003, 4.622249e-003, -7.781710e-003, -2.163514e-002, 1.779876e-002, 4.070652e-003, 2.945995e-003, -1.653865e-002, 1.935675e-002, 1.907385e-002, -1.422069e-002, 2.876585e-002, 2.876585e-002, -1.422069e-002, 1.129212e-001, 4.760671e-002, 3.128197e-002, 9.487783e-003, 2.765679e-002, 2.134011e-002, 3.055127e-002, 1.235238e-002, 8.480401e-004, -3.714346e-003, 4.848719e-002, -1.409800e-002, -7.288788e-004, -7.288788e-004, -1.409800e-002, 1.378121e-001, 2.760653e-002, 1.431577e-002, 2.486225e-002, 4.944653e-002, 3.813891e-002, 2.239074e-003, 8.464313e-003, 1.232560e-002, 3.623698e-002, 1.409723e-002, -1.449743e-002, -1.264379e-002, -1.264379e-002, -1.449743e-002, 3.760604e-004, -9.237343e-003, -1.882548e-002, 2.438608e-003, 1.764481e-003, 7.978196e-003, 1.347209e-002, -1.120235e-002, -6.536083e-004, 8.677368e-003, -1.704035e-003, 4.871327e-002, 4.119124e-002, 4.119124e-002, 4.871327e-002, 4.095629e-003, -3.130801e-002, 1.899956e-002, -3.407779e-002, -8.323957e-002, 5.468358e-005, -2.812299e-002, 5.215679e-003, -2.825618e-003, -6.635752e-003, 1.233997e-002, 2.168210e-002, 1.504700e-002, 1.504700e-002, 2.168210e-002, -9.876258e-002, 1.597167e-002, 6.346720e-003, 6.251608e-003, 1.233507e-002, -1.087224e-002, 1.380904e-002, 6.865020e-003, 3.198558e-003, 1.220546e-002, -3.596127e-002, 9.168421e-003, 5.832693e-003, 5.832693e-003, 9.168421e-003, -1.062908e-001, 2.505383e-002, 1.395073e-003, 4.969676e-003, 6.280565e-003, -1.558793e-002, 1.463961e-002, 1.211799e-003, 9.651647e-003, 2.251015e-002, -1.462978e-002, -3.680315e-002, 8.442866e-003, 8.442866e-003, -3.680315e-002, -4.768134e-002, -4.443503e-002, -3.399111e-002, 1.544369e-002, -7.105629e-002, -2.988704e-003, 1.685092e-002, 2.829193e-003, -1.231221e-002, -3.211156e-003},
{-1.146597e-003, -7.639960e-004, -5.520969e-003, 6.830631e-003, 2.009718e-002, -6.911096e-003, 7.922447e-003, -1.488430e-005, 1.979205e-003, 1.938908e-002, -1.013962e-002, 1.278366e-002, -1.013962e-002, 1.938908e-002, 1.979205e-003, -1.488430e-005, 7.922447e-003, -6.911096e-003, 2.009718e-002, 6.830631e-003, -5.520969e-003, -7.639960e-004, -9.040626e-003, -1.574091e-002, -3.054304e-002, -1.236073e-002, -2.267310e-002, 6.358410e-003, -1.565595e-002, 8.114736e-003, 3.849319e-002, 7.363224e-003, 5.351255e-002, -2.409946e-002, 5.401737e-002, 4.391875e-002, -2.128145e-002, -3.872514e-002, 1.879517e-002, -7.385389e-003, -6.378222e-004, -3.838564e-003, -2.338842e-002, -7.011067e-003, -1.360828e-002, 2.550781e-002, -4.671432e-003, -7.737751e-003, 6.378538e-003, 1.926500e-002, 3.290776e-003, 1.048006e-002, 1.210918e-002, -4.376551e-002, 9.369382e-003, 4.640408e-002, -4.478616e-002, 4.448510e-002, -2.228995e-003, 6.721038e-002, 3.765631e-003, 3.460175e-003, 2.325705e-003, -2.742152e-002, -1.475645e-002, -1.718707e-003, 4.201515e-002, -2.836108e-002, 5.967228e-002, 4.418936e-003, 3.479863e-002, -1.863823e-002, 2.500697e-002, -4.136148e-002, 2.300540e-003, -6.432271e-002, 2.979624e-002, 2.288741e-002, 2.716882e-002, 1.670230e-002, -8.424551e-003, -5.121895e-002, -5.251811e-003, 3.173688e-002, 4.455413e-002, 1.962740e-003, 1.195546e-002, 3.247651e-002, 4.364789e-002, 7.122698e-003, -2.172238e-002, -3.523104e-003, 3.934588e-002, -1.699370e-002, -3.329798e-002, -9.392376e-002, -4.085271e-002, 2.814052e-002, 1.564355e-002, 1.346751e-002, 2.648959e-002, 1.184386e-002, -2.039865e-002, -9.412454e-003, -1.353222e-002, -1.453370e-002, 8.023851e-003, -5.280127e-003, -1.558485e-002, -1.497691e-002, 4.444032e-003, 6.343908e-003, 2.440158e-003, -3.703293e-002, 2.383874e-002, -2.137976e-003, 2.397359e-002, 3.381247e-002, -6.927816e-002, 3.241766e-002, 3.542011e-002, -3.073568e-003, -1.098539e-003, -5.169026e-003, 1.711442e-002, -5.329283e-003, 7.500195e-003, -3.227394e-002, -1.296532e-004, 5.121631e-003, -1.101443e-002, -1.003480e-002, -1.167968e-002, 9.935370e-003, -4.788422e-002, 5.947808e-003, 1.079514e-002, 2.355604e-005, -4.070640e-002, -4.180732e-002, 7.644954e-002, 9.403389e-002, 6.818707e-002, 1.119733e-002, 1.755247e-002, 1.777270e-002, -1.414109e-002, -1.481823e-002, -4.613474e-002, -7.234839e-002, 2.575897e-002, 3.912385e-003, 4.593213e-003, 1.826513e-002, -2.339480e-002, 5.693916e-002, -6.417335e-002, 5.030873e-003, -3.288740e-003, 8.071478e-002, -8.089643e-003, -3.829028e-002, -2.699428e-002, -1.109792e-002, -1.326867e-002, -3.450675e-003, -2.614755e-002, -5.131978e-003, -1.834693e-002, -2.669568e-002, -4.281154e-002, 1.778564e-002, -5.478037e-002, -7.057036e-003, 8.022385e-002, 1.431651e-002, -3.797092e-002, -1.600042e-002, 2.700604e-003, -7.920646e-003, 4.306336e-002, -5.963286e-003, 2.233076e-002, 3.414489e-002,


© ISO/IEC 2004 — All rights reserved

Copyright International Organization for Standardization
Provided by IHS under license with ISO
No reproduction or networking permitted without license from IHS
Not for Resale

2.440832e-003, -5.143897e-002, -4.030513e-002, 7.284277e-003, 1.716116e-002, -1.681026e-002, -1.617498e-002, -2.161653e-002, 1.622235e-002, 2.756284e-002, -2.587792e-002, 5.597370e-002, 7.410214e-002, 6.727378e-002, 1.752976e-002, -1.036162e-002, 2.580075e-002, 4.710053e-002, -5.770121e-002, -1.738870e-002, 4.055514e-003, 4.440617e-003, 1.177192e-002, -7.496873e-003, -2.399852e-002, -8.653347e-003, -1.968015e-002, -2.380169e-002, -4.340432e-003, -2.363757e-002, 1.143967e-003, -5.424835e-002, 9.342043e-003, -7.988736e-003, 3.351571e-002, -5.005693e-003, -2.567783e-002, -5.550001e-002, 2.122822e-002, 5.792749e-003, -2.034944e-002, 1.474451e-002, -3.873224e-003, -3.667028e-002, -2.499612e-002, -2.208997e-002, 1.066085e-002, -1.027595e-002, -2.674721e-002, -4.814926e-002, -4.352376e-002, -7.631415e-002, -8.077519e-003, -5.412072e-002, 4.747145e-002, 2.752377e-002, -2.054160e-003, -2.831903e-002, 7.315603e-003, 8.625159e-003, -2.925060e-002, -8.921995e-002, -6.522417e-002, -9.419500e-003, 1.553088e-002, -7.871979e-003, -1.835415e-002, -3.054872e-003, -2.336142e-003, -1.383738e-002, -2.377077e-002, -2.157915e-002, -1.937488e-002, -3.093486e-002, -2.646410e-002, -2.557583e-002, 5.169275e-002, -1.895955e-002, -3.918043e-002, -4.163269e-002, -1.481951e-002, -6.549043e-002, -2.307254e-002, -8.896592e-003, -2.705169e-002, -5.908955e-003, -2.629916e-002, -7.494981e-003, -2.102604e-003, 2.849480e-003, -1.441436e-002, -1.104389e-002, -1.165393e-002, -2.387448e-002, -3.050755e-002, -3.155346e-002, -1.938505e-002, -1.773767e-002, 4.104446e-003, 4.351769e-002, 1.643545e-002, -4.475014e-002, -9.974695e-003, 4.476572e-002, 6.742863e-003, -2.763913e-002, 3.975155e-002, -3.476898e-003, -1.783349e-002, -1.351063e-002, -1.070237e-002, -1.650311e-002, -1.171958e-003, -1.327698e-003, -1.267635e-002, -1.889045e-002, -2.007047e-002, -2.972805e-002, -2.262699e-002, -2.258422e-002, 1.095880e-002, -1.986895e-003, 2.150602e-002, 7.167393e-002, -1.785628e-002, -1.993916e-003, -4.523197e-002, 2.432411e-002, 1.951600e-002, 2.375304e-002, 2.375304e-002, 1.951600e-002, 2.432411e-002, -4.523197e-002, -1.993916e-003, 6.823832e-003, -5.884436e-002, -4.496017e-002, 5.859872e-003, -3.152362e-002, -9.282919e-004, 5.347101e-002, 6.223529e-002, 6.567016e-002, -3.161046e-002, 7.172683e-002, -1.075348e-001, 1.634690e-002, 5.443574e-003, -1.457117e-001, -9.493957e-002, -3.694280e-002, -6.851591e-003, -8.296456e-003, -9.113264e-003, -1.445228e-002, 3.143084e-002, 9.053140e-002, 7.975698e-002, 5.785381e-002, 3.391275e-002, 3.717145e-002, 1.623221e-002, 1.506410e-002, 1.876379e-002, 1.889321e-002, 1.039065e-001, 1.573349e-001, 4.194817e-002, -3.394784e-002, 9.795375e-003, 4.926543e-002, 1.871674e-002, -5.186871e-003, 8.343191e-003, 1.950984e-002, 4.023717e-002, 8.458935e-002, 3.585987e-002, 9.299209e-002, 2.682692e-002, 1.150187e-002, -4.037752e-003, -6.212841e-005, 8.096067e-003, 3.767981e-003, 7.849555e-003, 1.703108e-002, 3.883605e-002, 8.527529e-002, 3.485546e-002, 6.007464e-003, -1.232592e-002, -6.808807e-003, 8.059981e-003, 4.558923e-003, 3.041293e-004, 1.152217e-002, 1.102448e-002, 2.767167e-002, 3.121889e-002, 9.091292e-003, 6.639141e-003, -6.362345e-002, 3.599123e-002, -2.097143e-002, -1.708814e-002, -1.708814e-002, -2.097143e-002, 3.599123e-002, -6.362345e-002, 6.639141e-003, -1.316090e-002, -7.919376e-002, -6.496600e-002, -2.214657e-002, -5.968810e-003, -1.181902e-002, -1.845758e-002, -4.466266e-002, -4.677573e-002, 1.450773e-002, 4.346499e-002, -1.156078e-002, 9.829690e-002, -1.090463e-001, -7.801117e-002, -1.666380e-002, -1.410473e-002, 6.579904e-003, 2.722944e-002, 3.985519e-002, -3.252861e-002, 5.527038e-002, 1.498239e-002, 3.572773e-002, 7.278604e-002, 7.911047e-003, 4.415685e-003, 1.626762e-002, 1.740148e-002, 1.750684e-002, -1.027291e-002, -4.620642e-002, 1.284725e-003, -3.606149e-002, 3.748711e-002, 6.093411e-002, 3.244522e-002, 1.069811e-002, -1.455878e-003, 1.376146e-002, 9.292628e-004, 3.866491e-003, 1.565228e-002, 1.713640e-003, 4.937023e-002, 8.061043e-002, 2.107761e-002, 2.306623e-002, 9.201143e-003, 8.240157e-003, -8.603669e-003, -2.291429e-002, -2.621980e-002, 1.277741e-002, 2.160999e-002, -3.964938e-002, 1.086875e-002, 1.907530e-002, 2.462916e-003, 5.460973e-003, 4.449896e-003, -2.799690e-003, -1.725403e-002, -2.452395e-002, -1.979516e-003, -7.244392e-003, 1.580537e-002, 1.002587e-002, 2.656999e-002, 3.187253e-003, -1.784586e-002, 4.663436e-003, 4.663436e-003, -1.784586e-002, 3.187253e-003, 2.656999e-002, 1.002587e-002, 7.432037e-002, 2.117541e-003, 8.106353e-002, 3.322402e-002, 1.956153e-002, 9.686353e-003, -1.026806e-002, -6.736142e-002, -1.013742e-002, 1.041617e-003, 6.651521e-002, -3.563338e-002, 8.065806e-002, -2.534416e-002, -5.609041e-002, -5.540660e-003, -1.660790e-002, -2.734327e-002, -2.261637e-002, -2.184328e-002, 9.507376e-002, -7.434403e-002, -2.943238e-002, 2.715198e-002, -1.573767e-003, -5.031625e-002, -1.381158e-002, -4.136878e-003, 4.753471e-003, 5.347532e-003, 2.753983e-002, -4.494129e-002, -3.607824e-002, 3.252658e-002, -1.327993e-002, -1.033510e-002, -2.036230e-002, -1.389979e-002, -1.059212e-002, -4.199297e-003, -5.909945e-003, -1.051609e-002, -2.911048e-002, 4.026517e-002, -1.401259e-002, -3.542873e-002, -3.168823e-002, -9.422868e-003, -1.778757e-002, -1.966692e-002, -1.029656e-002, -1.254621e-002, -1.778641e-002, -4.247971e-002, -4.658190e-002, 1.495074e-002, -1.469235e-002, -2.750682e-002, -1.532426e-002, -1.493611e-002, -9.746579e-003, -8.458272e-003, -1.020874e-002, -2.084634e-002, 4.553208e-004, 5.547668e-003, -8.186970e-003, 1.080319e-003, 6.498193e-003, 3.316043e-003, 4.894546e-003, -1.633540e-002, -1.633540e-002, 4.894546e-003, 3.316043e-003, 6.498193e-003, 1.080319e-003, 3.326047e-002, 4.910617e-002, 1.476171e-004, 5.805405e-002, 2.894345e-002, 4.090489e-002, -8.270959e-003, -1.425114e-002, -9.019766e-002, 1.000610e-002, 1.146381e-002, 4.402424e-002, -2.986548e-002, 5.363835e-002, 8.360597e-002, 1.872767e-002, 1.716949e-002, -6.106436e-003, -

© ISO/IEC 2004 — All rights reserved


Copyright International Organization for Standardization
Provided by IHS under license with ISO
No reproduction or networking permitted without license from IHS
Not for Resale

2.015104e-002, -1.053729e-001, -1.085296e-001, 3.850038e-002, -4.857315e-002, 4.087616e-002, -3.662043e-002, -1.896938e-002, 8.260089e-003, 3.709977e-002, -2.853324e-002, -5.644183e-002, -8.262511e-002, -2.303436e-003, -4.272092e-002, -4.702349e-002, 2.058184e-002, -7.555722e-003, -2.265293e-002, 8.287779e-004, 8.000290e-004, -1.390190e-002, -2.831394e-002, -2.071415e-002, -7.913853e-003, 3.777664e-003, -3.985112e-002, -1.581239e-002, -2.505608e-002, -2.573454e-002, -1.392112e-002, -3.458841e-003, -3.253728e-002, -2.683141e-002, -3.105795e-002, -2.032307e-002, -2.689146e-002, 2.938098e-002, -2.197364e-004, -1.784825e-002, -3.321242e-003, -2.509884e-003, -5.624053e-003, -1.300487e-002, -1.627683e-002, -1.560459e-002, -1.292273e-002, 1.893035e-002, 3.117671e-002, -6.499462e-002, -4.169446e-002, -4.169446e-002, -6.499462e-002, 2.109292e-002, 4.091303e-002, -4.120530e-002, 8.483762e-003, 1.232868e-002, 1.328986e-002, 1.548063e-003, 1.770925e-002, 7.078468e-003, 8.112174e-003, 4.486791e-002, -1.808157e-002, -6.233040e-003, -6.233040e-003, -1.808157e-002, -1.406201e-001, -8.323368e-002, -1.480814e-002, -1.976496e-003, -1.147964e-003, 3.310149e-002, -3.005844e-002, -1.860618e-003, 5.549888e-003, 1.266284e-002, -5.363677e-002, -6.162860e-002, -2.320613e-002, -2.320613e-002, -6.162860e-002, 3.425913e-002, -1.560879e-002, -1.055764e-002, 2.712996e-003, 3.029128e-003, 6.978259e-002, 2.790710e-003, 1.692206e-004, 2.600138e-003, 1.909850e-003, 1.828107e-003, 8.451906e-003, -2.082472e-003, -2.082472e-003, 8.451906e-003, -4.268408e-002, -2.249210e-002, -5.351986e-003, -7.116598e-003, -1.605172e-002, 2.405244e-003, 9.081494e-003, 3.497503e-003, -7.699467e-003, -1.908215e-002, -1.644066e-002, 4.359653e-002, 6.098600e-002, 6.098600e-002, 4.359653e-002, -5.404204e-002, -2.031222e-002, -2.010519e-002, -4.604199e-004, -5.572123e-003, -1.481572e-002, 2.179770e-002, -6.034505e-005, 5.079056e-003, -3.720345e-004, -7.746024e-002, 7.358515e-002, 3.830207e-002, 3.830207e-002, 7.358515e-002, 3.709669e-002, 2.040453e-002, 1.354289e-002, 2.042578e-002, 2.173244e-002, 5.823043e-002, 3.164138e-002, 1.030994e-002, 6.127866e-003, 7.685348e-002, 1.008051e-001, -1.331670e-002, 3.261923e-003, 3.261923e-003, -1.331670e-002, 1.720967e-002, -1.038011e-002, 1.665533e-002, 1.490984e-002, 9.641102e-003, 1.583520e-002, 6.453191e-002, 1.259639e-003, 6.190162e-004, 1.512457e-002, -3.990519e-002, 2.247624e-002, 3.147386e-002, 3.147386e-002, 2.247624e-002, -4.844463e-002, 1.255095e-002, -7.340045e-004, 1.594705e-002, 2.060277e-002, -9.769182e-003, 6.990743e-003, 1.467279e-002, 1.098590e-002, 2.402700e-002, 8.368936e-003, -3.005149e-002, -6.329161e-002, -6.329161e-002, -3.005149e-002, 1.271652e-001, 3.742659e-002, 1.678709e-002, -1.043517e-003, 7.919112e-002, 5.348318e-002, 1.576296e-002, 7.125353e-003, 9.238282e-003, 2.772537e-002, 1.307936e-002, 6.685476e-002, 1.548033e-002, 1.548033e-002, 6.685476e-002, -1.181463e-001, 2.246291e-002, -1.666175e-003, 4.021776e-003, 5.059797e-003, -5.397552e-003, 3.739819e-003, -5.120730e-004, 4.122293e-003, -1.050838e-002, -7.680705e-002, 1.864661e-002, -1.489030e-002, -1.489030e-002, 1.864661e-002, -1.281362e-001, -1.224804e-003, 7.295363e-003, 1.228253e-003, -1.726172e-002, -1.439668e-002, -4.550114e-003, 1.043239e-003, -1.088942e-002, -1.166028e-002, 6.624433e-002, -3.590209e-003, -1.807384e-004, -1.807384e-004, -3.590209e-003, 7.574853e-002, 4.446646e-002, 1.432864e-002, 3.087801e-004, 1.403532e-002, 3.562131e-002, 1.309371e-002, 7.488238e-003, 7.301558e-003, 1.732645e-002, -2.396902e-002, -3.643121e-002, -1.410049e-003, -1.410049e-003, -3.643121e-002, -6.570371e-002, -7.081699e-003, -1.614985e-002, -1.401136e-002, 5.130760e-002, -2.541388e-002, -2.672257e-002, -2.560286e-002, -1.334996e-002, -5.917657e-003, 1.832610e-002, 2.184182e-002, 8.158679e-003, 8.158679e-003, 2.184182e-002, -5.864609e-003, -2.318625e-002, -1.518628e-002, -2.603229e-002, -4.708494e-002, -6.410025e-003, -1.391957e-003, -7.654445e-003, -7.907627e-003, -3.087280e-002, 5.182585e-003, 4.234110e-002, 6.857655e-003, 6.857655e-003, 4.234110e-002, 1.074153e-002, -4.680706e-002, -7.573935e-003, -1.682589e-002, -2.449320e-002, -8.040216e-003, -1.561372e-002, -1.430784e-002, -6.137875e-003, -3.111139e-003, -2.806837e-003, -1.544991e-002, 4.202429e-002, 4.202429e-002, -1.544991e-002, -1.993784e-002, 2.850099e-002, 2.075270e-002, -2.755839e-002, -6.203789e-002, -7.657312e-002, -1.664261e-002, 2.291063e-003, -3.800097e-002, -2.853926e-002},
{1.787478e-003, 3.775484e-003, -2.824608e-003, 1.682254e-002, 6.810780e-003, -6.318428e-003, -8.202682e-003, 1.060752e-002, 5.482136e-003, -3.267391e-003, -2.124288e-003, 7.412471e-003, -2.124288e-003, -3.267391e-003, 5.482136e-003, 1.060752e-002, -8.202682e-003, -6.318428e-003, 6.810780e-003, 1.682254e-002, -2.824608e-003, 3.775484e-003, -2.177848e-002, -2.787474e-002, -3.812502e-003, -9.156933e-003, -3.897800e-003, -6.435385e-003, 2.617004e-002, 2.220873e-002, -5.059168e-004, -3.430950e-002, -1.725600e-002, 1.149467e-002, -9.101793e-003, -2.581472e-002, -1.818442e-002, 8.764970e-003, -7.506912e-003, -3.325571e-002, 4.024862e-002, -2.102404e-002, -2.594494e-002, -1.881586e-002, 1.296976e-002, -5.707359e-003, -4.249381e-003, -2.707191e-002, -2.404844e-002, -5.131148e-002, 2.781631e-005, -1.452865e-002, -3.247012e-002, -2.341428e-002, 4.522871e-002, 2.967500e-002, -1.638375e-002, -4.132713e-002, 2.682932e-002, -1.406898e-002, -9.030863e-003, 5.852682e-003, 1.483015e-002, -1.548013e-002, 1.521259e-002, -2.963901e-002, -1.804357e-002, -2.667578e-002, -6.158005e-006, -3.584937e-002, -5.411875e-002, -5.039080e-002, -1.520844e-002, 4.847131e-003, -1.528096e-002, -2.726022e-002, 3.890756e-002, 3.458258e-002, -3.759337e-002, 2.942792e-003, 1.676410e-002, 6.817487e-003, 3.066371e-003, 2.641124e-002, 1.326235e-002, 8.216772e-004, -7.531585e-003, -1.872267e-002, -3.990501e-002, -2.407311e-002, 1.862584e-002, -2.178513e-002, 4.490110e-002, 8.548629e-003, 7.042766e-002, -4.189344e-003, -


© ISO/IEC 2004 — All rights reserved

--`,,```,,,,````-`-`,,`,,`,`,,`---
Copyright International Organization for Standardization
Provided by IHS under license with ISO
No reproduction or networking permitted without license from IHS
Not for Resale

2.924409e-002, -2.422511e-002, 6.050579e-003, 3.081662e-002, -8.692469e-003, 2.860920e-002, -4.836455e-003, -1.038739e-002, -2.866788e-002, 1.190578e-002, 1.588322e-002, 4.848903e-003, 4.559805e-002, -1.641549e-002, -3.297518e-002, 1.215666e-002, -7.044914e-002, 6.998855e-003, 5.015728e-002, 1.996225e-003, 2.123952e-002, -2.678323e-002, 5.133316e-003, -7.615888e-003, -3.484524e-002, 2.566820e-002, -2.514262e-002, -8.272014e-003, 6.572128e-002, -1.730007e-002, 1.566889e-002, 6.016078e-002, 7.497261e-003, -4.634189e-002, -2.822567e-002, 1.148249e-002, -5.896818e-002, -6.277210e-002, -2.084133e-002, -4.366547e-002, -2.530308e-002, 6.796315e-002, 7.698097e-002, -3.485261e-003, 5.163229e-002, 8.240185e-002, 1.275699e-002, 2.874280e-002, 4.420626e-002, 4.025365e-003, -8.530076e-003, 3.985562e-003, -1.450843e-002, -6.421624e-003, -8.083971e-002, -4.838684e-002, -2.462531e-002, 3.385626e-002, 3.645679e-002, -5.947793e-002, -4.433264e-002, -2.514716e-002, 1.250519e-003, 4.415681e-002, 2.127700e-002, 3.946635e-002, 8.586676e-002, 7.381783e-003, -1.122955e-002, -1.800771e-002, 4.259759e-003, -2.131607e-003, -1.033780e-002, -9.326594e-003, -1.209593e-002, -2.642299e-002, 4.720630e-002, 1.504327e-003, -3.343690e-002, -1.192631e-002, 3.189743e-002, 5.812847e-002, -5.792219e-002, -7.335840e-002, -3.471007e-002, -5.595033e-004, -1.099653e-002, -2.148264e-002, -3.721228e-002, 2.598536e-003, 1.901065e-002, -1.552791e-002, -1.824425e-002, 6.517914e-004, -2.710988e-003, -4.310821e-002, -8.264315e-003, 2.255197e-002, 1.101171e-002, -2.755480e-002, 3.078285e-002, -6.157830e-002, -4.189029e-002, -1.742597e-002, -1.668305e-002, -5.952219e-002, 1.071435e-002, 1.827790e-003, 1.963726e-003, 5.196564e-002, 2.182772e-002, 1.341735e-002, 1.521373e-002, -1.390581e-005, -1.236725e-002, -1.680508e-002, -1.023300e-002, -2.395373e-002, -3.632722e-002, -1.711185e-002, -6.835197e-002, 3.494968e-003, 1.607422e-002, -4.939043e-002, 6.377870e-003, 6.286977e-003, -4.287478e-002, -1.924976e-002, 1.780094e-002, 6.784005e-002, -1.250390e-002, 4.202525e-003, 2.576231e-002, 4.940418e-002, 2.153291e-002, -1.649400e-003, 2.234951e-002, 2.574591e-002, -1.019279e-002, 1.493666e-002, -3.612741e-002, -4.001951e-002, -8.278935e-002, 6.394490e-002, -1.195439e-002, -1.663070e-002, 1.962174e-002, -3.836263e-002, -8.299034e-002, 3.353954e-002, -8.993798e-002, 6.677308e-003, 6.223330e-003, 6.153466e-003, 1.980137e-002, 2.142529e-002, 2.382162e-002, 1.867195e-003, 1.322886e-002, 4.273310e-003, 8.757689e-005, -3.014362e-002, -5.445009e-003, 1.192575e-002, -4.109819e-002, 4.285114e-002, 4.225838e-002, 2.491163e-003, -4.649785e-003, -7.969644e-002, -4.040828e-002, 1.378076e-002, -2.216415e-002, -7.219340e-005, 3.758444e-003, -4.748989e-004, 1.822072e-002, -3.704686e-003, 1.052816e-002, -2.084644e-002, -1.611402e-003, -1.191369e-002, -5.508169e-003, -1.454841e-002, -2.313093e-002, -1.924664e-002, -3.571118e-002, -8.582731e-004, -3.408921e-003, -6.993607e-002, 9.040793e-003, 3.881891e-002, 9.171583e-003, 5.077890e-002, -4.359637e-002, -2.340335e-003, -3.216993e-003, -3.096511e-003, 1.013315e-002, 9.309247e-003, 2.228841e-003, -1.095701e-002, -1.750714e-002, -2.614922e-002, -9.768676e-004, -1.231516e-002, -2.586597e-002, -2.889890e-003, -1.420132e-002, 6.127363e-003, -6.120112e-003, -7.143025e-002, -6.261468e-003, 1.284627e-002, -2.100255e-002, -1.911843e-002, 1.506283e-002, 2.313375e-002, 2.313375e-002, 1.506283e-002, -1.911843e-002, -2.100255e-002, 1.284627e-002, 4.506540e-002, 1.427165e-002, 5.411864e-002, -2.839455e-002, -2.447938e-002, -2.417031e-003, 5.198180e-002, 7.960113e-002, 6.642515e-002, 4.043982e-002, 6.586071e-002, 1.693988e-001, 3.276619e-002, 2.850864e-002, 9.442659e-002, 4.711330e-002, 2.540942e-002, 1.305686e-002, 2.714164e-002, -7.267091e-003, -5.896102e-002, 6.323046e-002, -2.080929e-001, 1.815003e-002, 2.159889e-002, -1.376544e-003, 2.437752e-002, -8.186081e-004, 2.877697e-003, -1.274150e-002, 1.343382e-002, 2.478883e-004, -1.280186e-001, 2.051610e-002, 6.056984e-002, 2.760240e-002, -6.262397e-003, -4.644091e-003, 1.528125e-002, -4.478505e-003, -1.242554e-003, 1.100875e-002, -2.193248e-002, -8.708711e-002, -1.673496e-002, -4.557422e-002, 1.688486e-002, 2.345072e-002, 1.726566e-002, 2.364402e-002, -2.696282e-003, 4.384701e-003, -9.366758e-003, -7.845906e-003, -8.519446e-003, -1.255564e-002, -1.385280e-002, -3.840449e-004, 1.623526e-003, 9.777325e-003, 4.589677e-003, -6.283275e-003, -3.556163e-003, -1.578782e-002, -1.653322e-003, -3.167502e-003, -1.261206e-002, -1.692007e-002, -1.544890e-003, -1.090610e-002, 1.179004e-002, 1.415374e-003, 1.415374e-003, 1.179004e-002, -1.090610e-002, -1.544890e-003, -1.692007e-002, 1.230933e-002, 6.202405e-002, -2.653288e-002, 2.353992e-002, 6.588928e-002, 5.296851e-002, -8.383916e-003, -3.929927e-002, -3.307152e-002, 8.509360e-002, 8.462613e-002, 3.237626e-002, 2.086982e-003, 3.792608e-003, 5.413763e-002, 4.537319e-002, 3.028160e-002, 4.847319e-002, 6.315023e-002, 5.717704e-002, -7.475291e-002, -2.025118e-002, 7.283999e-002, 7.684604e-002, -3.042514e-003, -4.688882e-003, 7.460351e-003, 1.450793e-003, 3.755542e-002, 3.644544e-002, -3.480660e-003, 8.620676e-002, 1.422971e-001, -2.280422e-002, -7.203954e-002, 1.173561e-002, -8.608793e-003, -9.637566e-004, 6.873884e-003, 1.167485e-002, 4.170519e-003, 2.221403e-002, 6.252189e-002, 3.500276e-002, 1.534689e-002, 1.174025e-004, 8.037554e-003, -6.396941e-003, -2.488316e-003, 6.311082e-004, 1.560047e-002, 6.083405e-003, 3.666201e-003, 1.321759e-002, -1.515201e-002, 5.648454e-002, 3.030048e-002, -1.170029e-003, 2.399615e-003, 2.044468e-003, -2.258818e-003, -2.633702e-003, 4.730606e-003, -1.838489e-004, -3.918509e-003, 9.749857e-005, 1.855141e-002, 4.311330e-004, -1.061060e-002, -1.739181e-002, -3.054919e-002, -4.162934e-003, -4.162934e-003, -3.054919e-002, -1.739181e-002, -1.061060e-002, 4.311330e-004, 3.490245e-002, -7.511878e-004, 1.213822e-002, 5.855662e-002, 1.347023e-002, 2.442722e-002, 4.843105e-003,

© ISO/IEC 2004 — All rights reserved


--`,,```,,,,````-`-`,,`,,`,`,,`---

Copyright International Organization for Standardization
Provided by IHS under license with ISO
No reproduction or networking permitted without license from IHS
Not for Resale

3.859061e-002, 4.174039e-002, -3.381162e-002, 9.115813e-002, 5.495878e-002, 1.458252e-002, -2.189777e-002, 2.060552e-002, 2.068631e-002, -7.997562e-003, -1.003513e-002, -6.749069e-002, -1.078046e-001, 9.814236e-003, 4.571557e-002, 2.393815e-002, -1.474369e-001, -2.888792e-002, 3.561594e-002, 1.692807e-002, 7.182725e-003, -1.879996e-002, -1.238909e-002, 3.457855e-002, 2.082105e-002, -3.163786e-002, 7.507585e-003, -2.289743e-002, -6.970025e-002, 1.032014e-002, 2.538335e-003, -4.388822e-004, -1.597686e-003, -2.258410e-003, 9.289502e-003, -2.249608e-002, 8.901340e-004, -4.763839e-002, -2.213771e-002, -1.429739e-002, -1.807918e-002, 6.532969e-003, 9.877309e-003, -2.432231e-003, 7.313163e-003, 4.368406e-003, -2.639276e-003, -2.038011e-002, 2.020995e-002, -2.238875e-002, -2.877987e-002, -1.574016e-002, -4.767406e-003, 3.408816e-004, 1.107854e-003, 4.867979e-003, 3.788971e-003, -4.508820e-003, -4.092844e-003, 2.109604e-003, 7.631838e-003, 3.312443e-002, -7.833962e-003, 6.906192e-004, -1.518916e-002, -1.518916e-002, 6.906192e-004, -7.833962e-003, 3.312443e-002, 7.631838e-003, 1.945678e-003, 1.200837e-001, 1.371970e-001, -8.415986e-002, -4.299839e-003, -1.485382e-002, -6.447682e-003, -2.269928e-002, -1.945053e-002, 6.053034e-003, -1.929058e-002, 1.101054e-003, 1.199232e-001, 4.038293e-002, -3.803301e-002, -1.026951e-001, -3.496556e-002, -1.416393e-003, -9.815331e-003, -2.066157e-002, -5.755847e-003, -2.452291e-002, -2.995556e-002, 4.689958e-002, 1.123255e-001, 4.188498e-002, 3.267121e-002, -6.112761e-003, -5.419978e-003, 8.209093e-003, -1.308621e-002, -1.038492e-002, 4.991117e-002, -5.885999e-002, -1.890191e-002, 7.954228e-003, 2.468701e-003, 9.433203e-003, 4.712715e-003, -7.930419e-003, -1.737181e-002, -2.837366e-002, -6.178792e-003, -1.292502e-002, -6.534497e-002, -3.048035e-002, 2.531225e-002, 2.011740e-002, 1.549705e-002, 3.958342e-003, -1.256054e-002, -1.770294e-002, -1.120039e-002, -1.099958e-002, 2.605726e-002, -3.075282e-002, -1.172416e-002, 1.133181e-002, 9.368120e-003, 1.783255e-002, 1.069748e-002, -1.285023e-002, -1.458341e-002, -6.626542e-003, -4.512963e-003, -3.007743e-002, 6.555060e-003, 1.354548e-002, 4.587088e-002, 4.587088e-002, 1.354548e-002, 7.339575e-002, 3.710998e-002, 2.336873e-002, 1.140234e-002, 2.104274e-002, 2.551614e-002, 3.174061e-002, 1.798137e-002, 1.610854e-003, -6.443046e-003, 6.741182e-002, -7.062731e-002, -3.190263e-002, -3.190263e-002, -7.062731e-002, 1.919216e-002, 4.181330e-003, 1.533444e-003, -6.807292e-003, -2.342677e-002, 1.145912e-001, 1.951142e-002, -2.915848e-003, -2.372729e-004, -2.960250e-003, -2.878416e-002, -5.675189e-002, -1.841931e-002, -1.841931e-002, -5.675189e-002, -1.478644e-001, 4.242720e-003, 5.642099e-003, 1.052114e-002, 1.501861e-002, 2.425671e-002, 7.195137e-003, 5.408547e-003, 8.551299e-003, 3.423244e-002, -3.288481e-002, -2.152867e-002, 2.103744e-002, 2.103744e-002, -2.152867e-002, -1.662253e-002, 1.140820e-002, -7.021686e-004, 2.214161e-002, -8.170031e-002, -1.957596e-003, 1.396197e-003, 1.378922e-004, 2.613834e-003, 2.997880e-002, -3.579914e-002, -1.985406e-002, 1.791664e-002, 1.791664e-002, -1.985406e-002, 3.185423e-002, -2.650938e-002, -1.707838e-002, 2.882932e-002, -1.086266e-002, -1.047324e-002, -2.548562e-003, -1.958034e-003, -1.895911e-003, -1.164063e-002, -4.442921e-002, 2.095091e-002, -4.128523e-003, -4.128523e-003, 2.095091e-002, 6.423658e-003, -2.015720e-002, -5.765125e-003, 3.596001e-003, -1.087154e-002, -8.156118e-002, -1.389855e-002, -4.660966e-003, -4.656407e-003, -2.134985e-002, -1.926824e-002, 4.583924e-002, 3.194006e-003, 3.194006e-003, 4.583924e-002, -2.002517e-002, -1.245777e-002, -6.564475e-003, -6.642420e-003, 3.294040e-003, -8.063500e-002, -2.257341e-002, -2.861021e-003, -6.456318e-003, -1.846720e-003, 6.832515e-002, -1.921511e-002, -5.061120e-003, -5.061120e-003, -1.921511e-002, 1.069256e-001, 3.973760e-002, 4.831518e-002, 2.297912e-002, 5.764197e-002, 1.687989e-002, 4.907838e-004, 4.010881e-003, 2.103186e-003, 1.801535e-002, -1.985591e-002, -6.940397e-003, 8.933411e-004, 8.933411e-004, -6.940397e-003, -3.083239e-002, -1.303596e-002, 8.024615e-003, -4.100857e-002, -5.512689e-002, -2.837379e-002, -8.773290e-003, 2.151901e-004, -1.879402e-003, -1.170824e-002, 9.487014e-002, 4.649472e-002, -5.255915e-003, -5.255915e-003, 4.649472e-002, 6.499355e-002, 1.147688e-002, 3.782743e-003, 4.431163e-003, -4.063419e-003, -2.963030e-002, -9.824660e-003, -7.350536e-003, -5.507805e-003, -1.618012e-002, 3.657585e-002, 2.292305e-002, -1.608852e-002, -1.608852e-002, 2.292305e-002, 5.030693e-002, -9.755186e-003, 4.134333e-003, -2.541866e-003, 9.679694e-003, -2.074470e-002, -9.866348e-003, -3.851107e-003, 9.840428e-004, -6.142784e-003, 6.556909e-003, -6.615417e-002, -2.718374e-002, -2.718374e-002, -6.615417e-002, 6.098203e-002, 4.091392e-002, -3.308647e-002, 5.663960e-003, 2.111828e-002, 1.602371e-003, 2.794985e-003, 2.799811e-003, -3.574021e-003, 8.779394e-005, -2.667192e-002, 2.419612e-002, 5.305822e-003, 5.305822e-003, 2.419612e-002, 3.427620e-002, -1.395095e-002, 6.667549e-003, -1.655784e-002, -3.550520e-003, 3.360633e-002, -2.001219e-002, 1.242517e-002, 7.296643e-003, 1.793841e-002, -2.979090e-002, -2.570258e-002, 7.260780e-003, 7.260780e-003, -2.570258e-002, -1.557050e-002, 7.417492e-003, 6.353092e-003, 7.218886e-003, 8.562059e-002, 8.234285e-003, -1.473875e-003, 5.763586e-003, 6.123420e-003, 1.376724e-002, -3.124509e-002, -5.117459e-002, -1.482464e-002, -1.482464e-002, -5.117459e-002, -6.922618e-002, 8.137768e-002, 2.030840e-002, 9.103257e-003, 8.324315e-003, -2.563182e-002, 2.279555e-002, 1.741364e-002, 7.120761e-004, 1.766629e-003, -9.778061e-003, -3.081943e-002, 4.868162e-003, 4.868162e-003, -3.081943e-002, 1.017829e-001, -6.868064e-002, -6.052378e-002, -1.102987e-002, -3.995587e-002, 1.331522e-002, 5.374995e-003, -3.828178e-004, -1.380739e-002, -2.225767e-002},


© ISO/IEC 2004 — All rights reserved

--`,,```,,,,````-`-`,,`,,`,`,,`---

Copyright International Organization for Standardization
Provided by IHS under license with ISO
No reproduction or networking permitted without license from IHS
Not for Resale

{1.624415e-003, 4.135003e-003, 2.312482e-003, -2.753714e-004, 7.036469e-003, -3.387183e-003, -9.891808e-003, -2.114318e-003, -4.375697e-003, 5.616102e-003, -3.109198e-002, 4.859207e-002, -3.109198e-002, 5.616102e-003, -4.375697e-003, -2.114318e-003, -9.891808e-003, -3.387183e-003, 7.036469e-003, -2.753714e-004, 2.312482e-003, 4.135003e-003, -2.045898e-002, 4.354808e-003, -1.531224e-002, 4.611701e-003, 2.969465e-002, -9.690489e-003, 2.209068e-002, 1.147774e-002, -2.882436e-003, -2.012519e-002, 4.814038e-003, -6.737508e-002, 2.767321e-002, 5.460803e-002, -4.458043e-002, 1.020788e-002, -2.451151e-002, -2.375926e-002, 6.658250e-003, -1.282889e-002, 3.667361e-003, 9.385295e-003, -1.251506e-002, -1.902165e-002, 3.932747e-003, 1.258754e-004, 5.601211e-002, 7.090732e-004, 6.682741e-003, -2.647099e-002, -1.740158e-003, 4.782491e-002, 1.045928e-002, -1.214512e-002, 2.764932e-002, -9.567630e-003, 4.724281e-002, 1.668683e-002, 2.124312e-002, 4.112587e-002, 3.891933e-002, -5.352053e-003, -1.078054e-002, -1.187992e-002, -3.806349e-003, -3.497424e-002, -1.799842e-002, 2.404192e-002, -7.523692e-003, 1.866813e-002, 4.183790e-002, -5.034200e-002, 7.519189e-003, -1.900887e-002, 7.277078e-003, -1.584073e-002, -2.777634e-002, -3.553717e-002, -3.257337e-002, -1.587769e-002, -2.859836e-002, -4.961084e-002, -7.945671e-003, -1.608078e-002, -2.659682e-002, -1.678630e-002, 3.212045e-003, 5.300323e-004, 1.217896e-002, -9.698209e-003, -6.648674e-002, -4.961780e-002, -3.811831e-003, -1.141905e-002, 2.095252e-002, 4.753509e-003, -1.556995e-002, 5.094258e-003, -4.325405e-002, -3.131051e-002, -1.744409e-002, 3.177551e-002, 3.159906e-002, -2.093986e-004, -3.180718e-002, -2.017488e-002, -3.956477e-002, -5.323301e-002, 2.946548e-004, -3.488107e-002, -5.775382e-003, 2.586924e-002, 6.094003e-002, 1.509838e-002, 3.095783e-002, 2.699030e-002, 9.343405e-003, 6.965025e-002, -1.141016e-002, -4.468925e-003, -6.941816e-003, -6.435681e-002, -7.931985e-003, 2.878049e-002, -1.366107e-002, -2.683731e-002, -3.209823e-002, -4.093854e-003, -1.654503e-002, 6.086774e-004, 6.651272e-003, 1.845108e-002, -2.075362e-003, 7.617987e-003, 3.290087e-002, -1.162809e-002, -4.119490e-002, -9.553014e-003, 4.831350e-002, -1.466789e-002, -1.664772e-002, -1.334608e-002, 5.694855e-002, 6.925138e-002, -2.423390e-002, -5.737203e-002, -4.702029e-002, -4.218893e-002, 1.104499e-002, 8.977986e-003, -1.082673e-002, -1.085012e-002, -2.565132e-002, -3.016667e-002, -1.429314e-002, 7.622890e-002, -1.201342e-002, -4.701120e-002, -2.429300e-002, 3.007079e-002, 1.548124e-002, 3.701132e-002, 4.080153e-002, -6.508818e-003, -7.658479e-003, -3.418413e-002, -4.771692e-002, 2.703841e-002, 4.383419e-002, -4.346891e-002, -3.927151e-002, -7.349459e-003, 1.571116e-002, 3.950567e-003, 5.039263e-002, -7.159570e-003, -8.725065e-004, 3.951648e-002, -1.060034e-002, 5.991336e-003, -3.279030e-002, 4.223084e-002, 3.747693e-002, 3.495070e-002, 2.455783e-002, -1.509060e-002, 1.758774e-003, 1.468052e-002, -2.778062e-002, -3.346252e-002, 2.086813e-002, -5.766075e-002, 1.610276e-002, 6.385599e-002, 6.878291e-002, 3.529373e-002, 5.106929e-003, -2.633581e-002, 3.054613e-002, 3.611751e-002, -3.802594e-003, 3.585909e-002, -7.396240e-002, -1.967833e-002, 1.707731e-002, 1.152520e-002, 8.521978e-003, -9.724446e-003, 2.621315e-003, 1.741832e-002, 3.358184e-002, -1.347361e-003, -2.244554e-002, 2.246132e-002, -1.101239e-002, 6.897263e-002, -7.338095e-003, 5.793045e-003, -1.824954e-002, 4.005392e-002, -3.036305e-002, 4.510090e-002, 4.369308e-002, 2.278297e-002, -1.846467e-002, -1.923834e-003, -2.055854e-003, 1.086378e-002, 3.052906e-002, 2.078045e-002, 6.178089e-003, 1.334708e-002, 1.557882e-002, -1.260155e-002, 3.093182e-002, -2.088600e-002, 1.869594e-002, 9.028613e-002, -2.923989e-002, -5.500064e-002, 1.451351e-002, 2.475315e-002, 3.503012e-002, -1.170769e-002, -8.294159e-003, -3.300289e-002, -3.579478e-003, -1.003312e-002, 6.208515e-003, -6.356404e-003, 4.602789e-003, 2.541115e-002, 9.685413e-003, 1.409638e-002, 8.147478e-003, 6.398318e-003, 1.063133e-002, -6.790490e-002, -1.367604e-002, -9.747986e-003, -1.267118e-002, 1.462531e-002, 4.433764e-002, 9.917991e-003, 5.226149e-004, 5.842661e-002, 2.362174e-002, 1.986582e-002, -2.900587e-002, -1.474242e-002, -5.403328e-003, -5.732053e-003, -7.704013e-003, 2.670956e-003, -5.224145e-003, -1.678570e-002, -5.949914e-003, -2.597856e-002, -5.802580e-003, 1.399751e-002, -9.914173e-003, 6.184772e-002, 5.333372e-003, 9.875855e-003, 5.490221e-002, -1.076993e-002, -2.271769e-002, -2.428404e-002, -1.534182e-003, -1.764763e-002, -1.821807e-002, -1.087322e-002, -2.431760e-002, -1.676236e-002, -5.600757e-003, 3.140796e-003, -1.072108e-002, -7.933627e-003, -2.808503e-002, -2.956837e-002, -6.781474e-004, -2.820684e-002, -3.342614e-002, -5.389070e-002, -2.828592e-002, 2.125645e-004, 3.712294e-002, -2.513272e-002, -1.635630e-002, 1.275253e-002, 2.888073e-003, 4.401766e-002, 4.401766e-002, 2.888073e-003, 1.275253e-002, -1.635630e-002, -2.513272e-002, 4.733289e-003, 1.081169e-001, -6.252988e-002, -1.343341e-001, 7.182681e-002, 6.711386e-002, 5.640103e-002, 9.375064e-002, 9.581978e-002, -9.743431e-002, -1.137736e-001, -5.749426e-002, 9.589014e-004, 3.324430e-002, -3.464229e-003, -4.554195e-002, -2.752334e-002, 4.925114e-003, 1.070620e-002, -1.716322e-002, -5.812768e-002, -3.525267e-002, 9.578229e-003, -1.426791e-001, 4.635222e-002, 5.405219e-002, 4.750781e-002, 7.297981e-003, 9.421014e-003, 5.677410e-003, -1.409160e-002, 1.208389e-002, 4.554283e-002, -4.075143e-002, 1.600597e-003, 4.290022e-003, 5.548925e-002, 5.917385e-002, 3.805356e-002, 4.175439e-003, 2.911694e-003, 1.260074e-002, 3.149687e-002, -6.942981e-002, 2.867853e-002, 4.769705e-002, 7.332279e-003, 2.296572e-002, 1.802624e-002, 2.738123e-002, 3.173974e-003, 7.182188e-003, 1.768555e-002, 1.182209e-002, -9.240732e-003, 1.525818e-002, 2.289120e-002, 1.207561e-002, 8.857475e-004, 1.195100e-002, 1.116345e-002, 6.035198e-004, 3.456502e-003, -2.807308e-003, 1.329742e-003,

© ISO/IEC 2004 — All rights reserved


Copyright International Organization for Standardization
Provided by IHS under license with ISO
No reproduction or networking permitted without license from IHS
Not for Resale

3.183782e-002, -4.072579e-002, -3.054702e-003, -6.389428e-003, 2.260997e-002, -2.040466e-002, -1.269288e-002, -1.269288e-002, -2.040466e-002, 2.260997e-002, -6.389428e-003, -3.054702e-003, 4.917661e-002, 9.246776e-002, 6.874816e-003, 3.621059e-002, 2.974565e-002, 1.719588e-002, 2.493715e-002, 8.737490e-002, -1.270694e-002, -1.075690e-001, 3.226597e-002, 2.252651e-002, -6.570250e-002, -7.487102e-002, -4.397186e-002, 3.545681e-003, 9.915518e-003, -1.480907e-002, -3.841227e-002, -1.919574e-002, -1.680110e-002, -1.624666e-002, 5.802876e-002, 5.119319e-002, 2.169979e-003, 7.057934e-003, 1.486067e-003, 1.570697e-002, 1.949477e-002, 2.192771e-002, -1.770218e-002, -8.073369e-002, 1.181778e-002, -8.066999e-002, -6.238506e-002, -4.656904e-004, -6.252685e-003, 4.475746e-003, 2.503687e-003, 2.360363e-004, -5.105519e-004, 1.426986e-002, 5.999720e-003, 5.925579e-002, -7.150605e-002, -2.076530e-002, 1.133136e-003, 1.845683e-003, 5.831122e-003, 2.256335e-003, 6.423865e-003, 2.321921e-003, 6.755331e-003, -1.273475e-002, -1.807117e-002, 1.093038e-002, 2.671576e-002, -1.581087e-002, -7.508577e-003, 4.182439e-003, 3.437584e-003, 4.262328e-003, -6.094633e-003, -1.386805e-003, -9.078981e-003, 1.477753e-003, -2.974573e-002, 3.397730e-003, 1.498824e-002, -1.940541e-002, 1.685095e-002, 7.840031e-003, 7.840031e-003, 1.685095e-002, -1.940541e-002, 1.498824e-002, 3.397730e-003, 2.200521e-002, -6.364109e-002, 1.389017e-002, 6.283629e-002, 3.294124e-002, 1.612741e-002, 6.287803e-003, -5.158318e-002, 7.287609e-002, -4.551826e-003, 9.772486e-002, 4.298004e-002, 1.136962e-001, 6.036503e-003, 4.030288e-003, 3.791185e-002, 1.687781e-002, 4.983540e-003, 1.095461e-002, -4.207039e-002, 1.114834e-003, 1.410663e-002, 1.571465e-002, 7.903635e-002, -9.933921e-003, 1.108080e-004, 1.237942e-002, 1.538093e-002, -1.124525e-003, -1.880225e-002, -2.483346e-002, -1.247644e-002, 1.691421e-001, -3.000224e-002, 2.299436e-002, 3.252750e-003, -2.340931e-002, 2.739866e-003, 2.824418e-003, -1.026068e-002, -1.800609e-002, -2.082287e-002, -6.209875e-003, 4.726001e-002, -7.099487e-002, 4.360777e-002, -2.701406e-002, -1.607216e-002, -9.127025e-003, 2.321040e-003, -6.705882e-003, -6.925423e-003, -1.161189e-002, -2.273739e-002, -9.017029e-003, 3.909521e-002, 1.646816e-002, -1.479898e-004, -2.679670e-002, -1.378472e-002, -4.844625e-003, -8.863337e-003, -7.117560e-003, -6.870392e-003, -3.606385e-004, 2.441964e-002, 3.497300e-002, -7.375335e-003, -2.080985e-003, 7.472291e-004, -1.783922e-002, -3.392169e-002, -3.392169e-002, -1.783922e-002, 7.472291e-004, -2.080985e-003, -7.375335e-003, 3.443533e-002, 9.732276e-004, -1.222101e-002, 4.238753e-002, -2.895037e-002, 1.445300e-002, 1.586946e-002, 7.924602e-002, 7.137836e-002, 6.615916e-002, -2.566747e-002, -2.515589e-002, 4.327867e-002, 2.039277e-002, 2.077851e-002, 2.726868e-003, 2.271156e-003, 2.339545e-002, 2.490446e-002, 2.197369e-002, -4.766526e-002, 7.433946e-002, 2.720845e-002, 1.416790e-001, -1.080061e-001, -7.735792e-002, -1.944853e-002, -2.082595e-003, -2.286301e-003, -1.868859e-002, 5.500074e-003, 5.056642e-002, 5.187059e-003, 3.917266e-002, 1.552245e-004, -3.282473e-002, -3.406411e-002, -3.330727e-002, -8.330176e-003, 6.693356e-003, 1.003145e-002, -1.913247e-002, -4.366064e-002, 6.608849e-003, -9.634744e-003, -2.049295e-002, -2.156887e-002, -2.974546e-002, -1.617367e-002, -1.089170e-002, 6.142965e-003, -7.972136e-003, -4.225314e-003, -2.955901e-002, 3.248660e-002, 5.040063e-002, 1.667079e-002, -6.487586e-003, -1.337015e-002, -2.271766e-002, -1.505300e-002, 2.268017e-003, -4.435507e-003, -1.681798e-002, -1.288646e-002, -2.863026e-003, -5.196587e-002, 3.133704e-002, 6.204902e-003, 6.204902e-003, 3.133704e-002, 2.679044e-002, -2.521109e-002, 5.733117e-003, 4.265925e-003, -2.707668e-002, 1.507891e-002, -7.059171e-003, 4.185269e-002, 7.229629e-003, -4.667503e-003, -4.031720e-002, -9.509467e-002, -3.506255e-002, -3.506255e-002, -9.509467e-002, 1.675065e-002, -1.632974e-003, 3.491678e-003, 9.920304e-003, 1.812388e-002, -3.579544e-002, 4.398263e-003, 6.157667e-003, -4.902368e-004, -1.648062e-003, 1.021673e-002, -2.859627e-002, -2.003952e-002, -2.003952e-002, -2.859627e-002, 1.790603e-001, 1.560161e-002, -2.156229e-004, -8.942356e-003, -7.955261e-003, 2.963388e-002, -3.960968e-003, -1.792692e-003, -5.578257e-003, 1.176611e-003, 7.945177e-002, 1.053448e-002, -2.621161e-002, -2.621161e-002, 1.053448e-002, -7.438701e-002, -3.312631e-003, 5.624337e-003, 7.680741e-003, 1.621281e-002, -3.193374e-002, -5.587251e-003, 2.632497e-003, 1.540238e-002, -1.073487e-002, 4.318961e-002, 1.066054e-002, 5.372133e-002, 5.372133e-002, 1.066054e-002, 1.150407e-001, 6.645031e-002, -1.097517e-002, 6.131074e-003, 3.634002e-002, 3.735714e-002, 1.889933e-002, 1.160917e-002, 1.232666e-003, 6.979002e-003, 8.621640e-002, -4.653960e-003, 8.473458e-003, 8.473458e-003, -4.653960e-003, -1.017808e-001, 1.212285e-002, 1.055465e-002, 5.998057e-003, -5.969387e-003, -1.883443e-002, 9.299269e-004, 2.199529e-003, 6.793794e-003, 8.893456e-003, -1.523586e-001, 1.938965e-002, 1.866172e-002, 1.866172e-002, 1.938965e-002, 3.587758e-002, -4.925038e-003, 7.527101e-003, 1.490606e-002, -1.542158e-002, 8.686291e-003, -4.185618e-003, 1.502741e-003, 2.756027e-003, 9.027382e-003, 2.196428e-002, -3.410183e-002, 4.286875e-002, 4.286875e-002, -3.410183e-002, 7.321974e-002, 2.870216e-002, 1.515729e-002, -9.236755e-003, -1.201053e-002, 9.842596e-003, -4.112036e-003, 8.703335e-003, 1.430615e-003, -2.620857e-003, -3.502372e-002, -7.881438e-002, -5.055903e-002, -5.055903e-002, -7.881438e-002, 2.432577e-002, 6.189908e-003, 1.304075e-002, -4.437737e-003, 1.050430e-002, 1.393228e-002, -5.360262e-004, 1.417161e-003, -9.992854e-004, 3.834126e-003, -5.878285e-002, -1.998584e-002, -7.823671e-003, -7.823671e-003, -1.998584e-002, 1.452741e-002, 9.292141e-003, 5.751791e-003, -2.367803e-003, 3.233765e-002, -2.669841e-003, 6.764856e-003, -3.532725e-004, -4.146867e-003, 3.883387e-003, 1.577735e-001, -4.483409e-002, -


© ISO/IEC 2004 — All rights reserved

Copyright International Organization for Standardization
Provided by IHS under license with ISO
No reproduction or networking permitted without license from IHS
Not for Resale

1.820135e-002, -1.820135e-002, -4.483409e-002, -9.103147e-003, 2.406423e-002, 7.956003e-003, 2.413864e-003, 2.591982e-003, -1.347550e-002, -3.424009e-003, -1.210539e-003, -7.901667e-004, -2.834287e-003, -3.036173e-002, -1.917108e-002, -8.549749e-003, -8.549749e-003, -1.917108e-002, -5.853073e-002, -5.223500e-002, -2.042369e-002, 1.428122e-002, -1.313531e-002, -3.158899e-002, -2.106836e-002, -6.047510e-003, 2.428242e-003, -7.334134e-003, 2.474838e-002, -1.747449e-002, -1.420432e-002, -1.420432e-002, -1.747449e-002, -7.631387e-002, -2.703517e-002, 1.533436e-002, -2.740771e-003, 2.926670e-002, -4.920106e-002, -1.969084e-002, -4.713080e-003, 7.230688e-004, -3.621230e-003, 3.931246e-002, -7.579974e-002, -3.345150e-002, -3.345150e-002, -7.579974e-002, -7.317937e-002, 1.090948e-002, 6.300706e-003, -1.257055e-002, -2.846726e-002, -2.967759e-002, 3.756516e-003, 1.364424e-003, -4.071684e-003, -2.060803e-002, -6.096771e-002, -9.799213e-003, -8.939303e-003, -8.939303e-003, -9.799213e-003, -4.930814e-002, -3.494202e-002, -7.688647e-003, -6.947957e-004, 1.080444e-003, -1.331043e-002, -3.092748e-002, -1.215025e-002, -1.812892e-004, -1.219814e-003, -3.147104e-002, 3.768699e-002, -1.250990e-002, -1.250990e-002, 3.768699e-002, -6.630578e-003, 1.439332e-001, 3.303969e-002, 3.800678e-002, 2.562477e-002, 5.023254e-003, -5.119347e-003, -4.280594e-003, 4.049728e-003, -4.422600e-003},
{-1.261840e-003, 9.705479e-004, 1.052041e-002, -1.500793e-002, -2.455534e-004, 8.971711e-003, 1.883263e-002, -1.322803e-002, 1.814259e-002, -2.239615e-002, 3.927203e-003, -5.612573e-002, 3.927203e-003, -2.239615e-002, 1.814259e-002, -1.322803e-002, 1.883263e-002, 8.971711e-003, -2.455534e-004, -1.500793e-002, 1.052041e-002, 9.705479e-004, 9.416809e-003, -1.887760e-002, -2.476401e-002, -2.104286e-003, -6.228142e-003, 3.695036e-002, -5.159796e-002, 1.824626e-003, -4.815340e-003, -8.680808e-003, 2.749833e-003, 2.523402e-002, -8.120636e-002, -9.322107e-003, 1.725041e-003, 1.722099e-002, 1.105269e-002, 2.813981e-002, 9.677491e-003, -1.142022e-002, -7.394772e-003, 2.124555e-002, 6.385342e-003, -7.433252e-003, -2.238730e-003, 5.316146e-003, -2.283305e-003, 1.522324e-002, 2.789255e-002, 4.761721e-003, 1.632310e-002, 1.901083e-002, 3.894812e-002, -1.720111e-002, 2.699930e-003, -1.849853e-002, 1.332293e-002, 5.678381e-002, 3.402439e-002, 5.425898e-002, 4.082402e-002, -5.348008e-004, -2.765861e-002, -1.212174e-002, 3.083306e-002, -1.832093e-002, 5.528217e-003, 4.413229e-004, -4.397074e-004, -4.335997e-003, 4.281450e-002, -1.260442e-002, 7.565765e-002, 3.986741e-002, 8.393723e-002, -1.913881e-003, -6.099063e-002, -3.003598e-002, 7.909227e-003, 6.097298e-003, -8.642478e-003, -9.022940e-004, 5.338528e-003, 7.505338e-003, 4.814242e-002, -2.646070e-002, 4.415832e-003, 2.013100e-002, -1.002324e-002, -2.349962e-002, 1.006978e-002, -2.323718e-003, -7.669055e-003, 3.740782e-002, 3.851212e-002, 5.395480e-002, 3.339147e-002, 3.565118e-002, -2.159789e-002, 4.586235e-002, -1.883218e-002, 1.780332e-002, 2.995504e-002, -2.408063e-002, 4.764446e-003, 5.191126e-003, 5.785937e-003, -6.947870e-003, -6.303829e-002, 5.229827e-003, -1.182864e-002, -5.342447e-002, -1.522700e-002, 8.132670e-003, -3.330785e-004, 2.058655e-002, 5.973263e-003, -8.199655e-002, 5.033250e-003, 1.284964e-002, -2.405504e-003, -2.284719e-002, -1.525005e-002, 1.691623e-002, 6.055735e-002, 1.486005e-002, -2.456491e-002, 3.451416e-003, 2.233344e-002, 5.912428e-002, -4.225326e-002, -1.514865e-002, -1.060041e-002, -9.449342e-003, -4.468823e-002, -3.248900e-002, -3.677629e-003, 1.794551e-002, -1.091389e-002, -6.993553e-003, 4.044548e-002, 1.043755e-002, 1.280667e-002, -5.456986e-002, 2.934318e-002, 4.969152e-003, -2.715235e-002, -1.253273e-002, 9.263737e-004, -7.294741e-002, -4.686147e-002, 1.087207e-002, 1.700093e-002, 1.119288e-002, 2.623895e-002, -5.183645e-002, 1.518809e-002, 7.398276e-002, -8.886426e-003, 3.117186e-002, -2.854768e-002, 2.383911e-002, 2.494225e-002, -7.158501e-004, 7.724843e-003, 2.023367e-002, 1.945291e-002, 2.377677e-002, -4.761904e-002, 2.843120e-002, 1.312017e-002, -1.032595e-002, -1.274164e-002, 7.471927e-002, 1.007738e-001, 3.009892e-002, 3.161532e-003, 3.848393e-002, -1.268832e-002, 2.040726e-002, -1.768917e-002, -2.289261e-002, 3.221945e-003, -6.500953e-003, -8.984654e-003, 4.170156e-003, 2.378081e-002, -1.824387e-002, -2.348653e-002, 3.345280e-002, -7.476410e-002, 5.129648e-002, 1.282304e-002, 2.117253e-002, -4.627079e-002, 8.248873e-003, -1.759430e-003, 1.829927e-002, 1.629895e-002, 5.244856e-004, 3.884672e-003, -5.293611e-002, -4.836619e-002, 1.254710e-003, -1.049066e-002, 7.827027e-003, 1.071132e-002, 2.392151e-002, 3.034629e-002, 1.204725e-002, 2.571138e-002, -1.151353e-003, -1.466937e-002, 4.425647e-004, -1.975761e-003, 5.913220e-002, -3.205345e-002, -5.959367e-003, -3.557902e-002, -3.306159e-002, 8.802226e-002, 3.956642e-002, -2.660498e-002, -2.511312e-002, -6.457659e-003, 3.885763e-003, -7.193880e-003, -1.613150e-002, -1.834235e-002, -8.124923e-003, -1.474859e-002, 9.382673e-003, -2.096272e-002, -7.122142e-003, 1.643116e-002, -6.419067e-002, 3.893406e-002, -5.219638e-002, -1.248651e-002, -2.109886e-002, 1.030934e-001, -5.488853e-002, 2.413130e-002, 5.440574e-002, 9.577146e-002, -6.833492e-003, 5.156126e-003, -2.196586e-002, -3.065769e-003, -6.175633e-003, -6.053120e-003, -8.791887e-003, -1.288474e-002, 7.801790e-003, 1.651923e-002, 8.212907e-003, -1.238098e-002, -2.956728e-002, 2.744694e-002, -6.318616e-002, 1.893849e-003, -2.357304e-002, 1.199778e-002, 4.024224e-002, -3.102085e-002, -2.625373e-004, 9.576356e-004, -1.116603e-002, -2.092014e-002, -2.603505e-002, -1.969469e-003, -7.486167e-003, -2.505901e-003, 1.189782e-002, 8.009133e-003, -4.494738e-003, 1.184465e-002, 6.734220e-003, 1.907436e-002, 1.154372e-002, 2.350369e-002, -2.815506e-002, -2.617757e-002, 1.390550e-002, -9.136688e-003, -3.777520e-002, 5.951167e-002, -1.407125e-002, 2.355244e-002, 2.772299e-003, 2.654112e-004, 1.383159e-002, 1.634372e-003, -9.682447e-004,

© ISO/IEC 2004 — All rights reserved


Copyright International Organization for Standardization
Provided by IHS under license with ISO
No reproduction or networking permitted without license from IHS
Not for Resale

5.198071e-003, 4.777650e-003, 1.047670e-002, 4.570598e-003, 1.007796e-003, 1.857964e-002, 1.449277e-002, -6.553339e-003, 2.745353e-002, -6.701783e-002, 4.666781e-002, 2.598547e-002, 8.165619e-004, 1.737258e-003, -6.415276e-003, -4.303467e-002, 3.381413e-002, 6.336234e-003, 6.336234e-003, 3.381413e-002, -4.303467e-002, -6.415276e-003, 1.737258e-003, -1.397500e-003, 3.191600e-002, 9.160263e-002, -2.928511e-002, -7.639518e-002, -2.661669e-002, -3.789940e-002, -8.700584e-003, 1.057348e-002, 2.234662e-002, 2.072864e-002, -8.246312e-002, 2.202284e-002, -1.075499e-002, 1.792524e-002, 1.139677e-002, -1.781697e-002, 1.742114e-002, 3.022333e-002, 7.190905e-002, 1.340186e-001, -5.966700e-002, -9.052979e-002, -2.395882e-003, 1.542068e-002, 2.972400e-002, 1.581156e-002, 4.000376e-003, 1.362124e-002, 2.777251e-002, 2.466366e-002, 3.729390e-002, -1.983148e-001, -2.807660e-002, -8.322968e-002, 3.133019e-002, 2.021816e-004, -8.584461e-003, 1.764913e-003, 4.956696e-003, 2.073479e-004, 1.026906e-002, 7.644649e-003, 2.333563e-002, 8.090562e-002, -5.329714e-004, 1.452629e-002, -1.650212e-002, -6.488490e-003, 6.974429e-004, -1.987324e-003, 9.216564e-003, -2.467509e-003, 5.101903e-003, 1.072282e-002, 3.797350e-002, 9.298693e-003, 4.716556e-003, -2.322512e-002, -9.380685e-003, -1.875968e-003, 2.665373e-003, 6.453595e-003, -4.561234e-003, 2.451909e-003, -1.317071e-002, -1.064641e-002, 9.802378e-003, -1.187284e-002, -2.776592e-002, 2.523576e-002, -1.472756e-002, -1.472756e-002, 2.523576e-002, -2.776592e-002, -1.187284e-002, 9.802378e-003, -6.112807e-003, -2.609711e-002, -1.164737e-001, 1.907145e-002, 1.060570e-002, 9.397972e-004, -1.453488e-002, -2.918355e-003, -4.669740e-002, -1.003598e-001, -1.982635e-002, 4.012801e-002, -7.444676e-002, 5.402532e-002, 7.033861e-002, 5.620014e-002, 2.697795e-002, -7.684722e-003, -7.920377e-003, 4.825511e-003, -6.754734e-002, 3.221132e-002, 6.460379e-002, -5.960584e-002, 7.528399e-002, 2.208559e-002, 1.562452e-002, 1.712956e-002, 1.846312e-002, 7.726119e-003, -3.386438e-003, -3.275441e-002, 2.182598e-001, -1.394841e-001, 3.099753e-002, 4.562999e-002, 3.133622e-002, 6.797928e-003, 1.271775e-002, 1.409586e-002, 2.136676e-003, -8.515061e-003, 3.354304e-002, -1.114399e-001, -1.834452e-002, 1.504943e-002, -8.934217e-003, -1.528476e-003, 1.172369e-003, 3.523894e-003, -5.980002e-003, -2.483547e-003, -3.034027e-002, 1.066681e-003, -2.591292e-002, -1.294933e-003, 7.194452e-003, -8.510136e-003, 1.518221e-003, 6.466424e-003, -3.375274e-006, 4.874536e-003, -5.878957e-003, -5.112380e-005, -8.664472e-003, 2.416509e-002, -1.890375e-003, -8.563942e-003, 1.214666e-003, -2.113543e-002, -6.419790e-003, 2.702191e-002, 2.702191e-002, -6.419790e-003, -2.113543e-002, 1.214666e-003, -8.563942e-003, -7.624425e-003, 1.102150e-001, 3.029741e-002, -1.941373e-002, 2.393481e-002, 3.852289e-002, 3.194940e-002, 5.986051e-002, -1.333477e-001, -1.111810e-003, -3.837865e-003, 2.225805e-002, -6.986125e-002, -1.000651e-001, -4.392008e-002, -2.291661e-002, -2.768206e-003, -1.910456e-002, -4.311807e-002, 6.556538e-003, -1.728724e-002, -2.418722e-002, -4.942925e-002, -1.183284e-002, -7.504093e-002, -5.311048e-002, -3.860653e-002, -1.624026e-002, 1.915605e-003, 8.933542e-003, 4.360542e-002, 7.601715e-002, -1.056166e-001, -9.027021e-002, -1.493049e-002, 2.377105e-002, -3.696068e-002, -2.796413e-002, -1.611816e-002, 1.318485e-003, 1.088184e-002, 1.393746e-002, 2.883635e-003, -3.873800e-002, -8.053135e-002, 1.022805e-002, -6.280823e-003, -6.795944e-003, -2.282431e-002, -2.342350e-002, 6.181650e-003, 6.161601e-004, -5.474493e-003, 5.394386e-003, 7.817193e-003, -4.296974e-002, 5.176718e-003, 2.510074e-002, 6.556465e-003, -4.823374e-003, -1.642158e-002, 7.738489e-003, 1.083006e-002, 1.492176e-003, 1.176394e-002, 1.160249e-002, 1.045839e-002, 4.779634e-003, -2.556274e-002, -6.784261e-003, 3.183798e-003, 1.091045e-002, 1.091045e-002, 3.183798e-003, -6.784261e-003, -2.556274e-002, 4.779634e-003, -3.381656e-002, -2.510261e-002, 5.417473e-003, 1.750279e-002, -5.794589e-002, 1.779719e-002, -2.564791e-003, -3.668384e-002, -1.385648e-002, -7.558765e-003, 4.687319e-002, 4.489075e-002, -5.871560e-003, 3.741697e-002, -4.034758e-002, 1.464653e-002, 1.733519e-002, -2.010612e-002, -2.147348e-002, -6.493840e-003, -4.219973e-003, 8.908620e-003, -2.322137e-002, -7.699866e-002, 6.746750e-002, 2.227187e-002, -2.071609e-003, 1.132653e-002, -8.453196e-003, -1.968900e-002, -1.071019e-003, -2.246835e-002, -3.933716e-002, 8.933900e-002, -9.301440e-003, 2.732968e-002, -1.212322e-002, 1.968126e-002, 1.187548e-002, -8.051320e-003, -1.807313e-002, -2.358319e-003, 2.663143e-002, 2.360935e-003, -2.024424e-002, 1.806485e-002, 1.783799e-003, 3.207364e-003, 6.603315e-003, 7.102785e-003, -6.050132e-003, -7.709005e-003, 1.423729e-004, 2.467861e-002, -8.311636e-003, 1.082274e-002, -3.613240e-003, 1.322475e-002, 6.475020e-003, 7.602512e-003, 6.793969e-003, -4.595675e-003, 8.770588e-003, 8.348185e-003, 3.071242e-003, 9.611001e-004, 3.385829e-002, -7.185618e-003, 4.627772e-002, 4.627772e-002, -7.185618e-003, 1.561852e-003, -4.344293e-002, -3.283328e-002, -1.050911e-002, -2.414719e-002, 7.930887e-003, -3.523074e-002, 9.653521e-003, 7.415804e-005, -9.027147e-003, -9.558944e-002, 1.633955e-002, 1.972448e-002, 1.972448e-002, 1.633955e-002, -4.293332e-002, 4.711600e-002, 2.066618e-002, 1.571654e-002, 1.581992e-002, 3.703736e-002, 3.027785e-002, 6.962585e-003, 7.144512e-003, 1.666880e-002, 5.447550e-002, -7.891093e-002, -1.708488e-002, -1.708488e-002, -7.891093e-002, 3.942577e-002, -2.359892e-002, -4.379593e-003, -5.790973e-003, -2.389668e-002, -2.835179e-002, 8.462313e-003, 2.252284e-003, -2.524977e-003, 6.317242e-003, 1.331487e-002, 1.823262e-002, 4.545621e-002, 4.545621e-002, 1.823262e-002, -7.371045e-002, -8.543742e-003, 9.994155e-003, -1.707551e-002, -7.689821e-002, -3.636578e-002, -1.745603e-002, 7.440684e-003, 6.450880e-003, -3.452034e-002, -3.292531e-002, 3.858557e-002, -5.620587e-002, -5.620587e-002,


© ISO/IEC 2004 — All rights reserved

Copyright International Organization for Standardization
Provided by IHS under license with ISO
No reproduction or networking permitted without license from IHS
Not for Resale

3.858557e-002, -1.078164e-001, -6.614750e-003, 1.571767e-002, 1.937074e-002, 2.901082e-002, -2.196272e-002, 7.118596e-003, 5.788317e-003, 1.159911e-002, 1.193308e-002, 9.547303e-002, -4.867086e-003, -5.145740e-003, -5.145740e-003, -4.867086e-003, 9.566674e-002, 1.809730e-002, -4.587109e-003, -8.155549e-004, 8.261091e-003, -9.521723e-002, -6.760704e-003, -2.916740e-003, -1.264637e-003, -6.565193e-003, -9.106031e-002, -8.181832e-002, -1.577579e-002, -1.577579e-002, -8.181832e-002, 1.715863e-001, -3.764708e-002, 6.429478e-003, -2.812332e-004, 1.951034e-002, -5.882812e-002, -6.281245e-003, -3.025920e-003, -1.476224e-003, -1.338019e-002, 1.262353e-002, 2.817649e-002, -2.272455e-002, -2.272455e-002, 2.817649e-002, -4.207715e-002, 6.817275e-002, 1.187898e-002, 2.368362e-002, 4.805346e-002, -2.028201e-002, 1.120214e-002, 3.364082e-003, 4.332719e-003, 4.583996e-003, 7.787135e-002, -4.200362e-002, 4.564692e-003, 4.564692e-003, -4.200362e-002, -4.402783e-002, -6.252016e-003, 5.708797e-003, -7.874779e-003, 3.272782e-003, -1.764779e-002, -1.325718e-003, 2.741659e-003, 6.446589e-003, 4.122699e-003, 5.020927e-002, -1.982041e-002, -9.603213e-003, -9.603213e-003, -1.982041e-002, 8.400990e-003, -3.800128e-002, 4.619829e-003, -3.867926e-003, -2.829498e-004, -1.485455e-002, -4.740920e-003, -1.284797e-002, 2.127559e-003, 5.941580e-003, 5.600531e-002, -2.664541e-002, 5.779441e-004, 5.779441e-004, -2.664541e-002, 1.213973e-002, -7.627839e-003, -1.799131e-003, 7.358503e-003, -3.274636e-002, 1.775396e-002, 2.015063e-002, 4.309071e-003, 7.804494e-003, 5.042072e-003, -8.107684e-002, 1.438539e-002, -6.225228e-002, -6.225228e-002, 1.438539e-002, 1.030852e-002, -6.030494e-003, 2.434846e-003, 1.141356e-002, 1.617126e-002, 1.172236e-003, 5.905302e-003, 3.912582e-003, 3.312783e-003, -1.183108e-003, -5.250172e-002, 1.081627e-002, -3.111227e-002, -3.111227e-002, 1.081627e-002, 1.283806e-002, -4.525313e-002, -3.878112e-003, 3.638457e-003, 4.796404e-002, -5.429886e-002, -3.924233e-003, -2.045542e-002, 8.035906e-003, 2.315298e-003, -7.746928e-002, 4.177230e-002, 2.736053e-002, 2.736053e-002, 4.177230e-002, -2.051618e-002, -1.380964e-002, -1.084516e-002, -3.110265e-002, -8.072121e-002, -3.284776e-002, -3.961783e-003, -5.271172e-003, -2.901049e-003, 3.144072e-003, 2.093701e-002, 5.383284e-002, 1.694984e-002, 1.694984e-002, 5.383284e-002, -5.154683e-003, -2.188506e-002, -1.018628e-002, -1.908426e-002, -1.709730e-002, 2.338089e-003, -4.989804e-003, -2.695096e-003, -6.045172e-003, -5.129661e-003, 1.459291e-002, 3.351047e-002, 1.940199e-002, 1.940199e-002, 3.351047e-002, -5.658858e-002, 4.274737e-002, -8.455465e-003, -2.329244e-002, -1.849654e-002, 1.368215e-003, -1.008646e-003, 1.294420e-002, -1.221730e-002, 1.121914e-002},
{3.263195e-004, 1.108684e-003, -7.973483e-003, -2.277007e-003, -8.683675e-003, -3.135664e-003, -6.582688e-003, -2.430535e-003, -2.244634e-002, 4.392420e-002, 8.661366e-003, 5.586638e-002, 8.661366e-003, 4.392420e-002, -2.244634e-002, -2.430535e-003, -6.582688e-003, -3.135664e-003, -8.683675e-003, -2.277007e-003, -7.973483e-003, 1.108684e-003, -9.888929e-003, 2.438173e-002, -3.374912e-003, 1.604468e-002, -9.171816e-003, -1.408713e-002, 1.693599e-002, -1.229083e-004, 4.607155e-002, 1.649549e-002, -1.632575e-002, -2.590962e-002, 2.300589e-002, -5.547299e-002, 1.607208e-002, 1.206953e-002, -1.533319e-002, -1.892641e-002, 1.023461e-002, 1.759115e-002, 1.863111e-002, 1.087229e-002, 5.395048e-004, 8.740794e-003, 1.965984e-003, 4.633227e-002, 3.575908e-002, 2.855974e-002, -5.633829e-003, 2.177348e-003, -2.324321e-002, -1.472619e-002, 3.130151e-002, 5.970449e-002, 8.855686e-003, 8.255856e-003, -6.141556e-002, 6.328614e-003, 4.703863e-004, 4.041383e-002, 5.532593e-002, -1.543715e-002, -1.642736e-002, -3.160169e-002, 4.942854e-003, -1.295254e-002, 4.890942e-002, 1.598808e-002, 1.263631e-002, 2.471061e-002, -4.866843e-002, -1.079438e-002, -3.342348e-002, -3.491651e-002, -1.705605e-002, 5.706163e-003, -8.376761e-002, 5.779300e-002, -4.807307e-002, -5.905137e-002, -4.815025e-002, 4.277926e-002, 3.247317e-002, -1.884765e-002, -2.812503e-002, 1.834323e-002, 9.788277e-004, -2.472072e-002, 6.505693e-003, 2.872077e-002, 2.693747e-002, 5.254240e-002, -4.896376e-002, -7.297667e-002, -4.016561e-002, -1.302169e-002, 1.057398e-002, 4.394860e-002, 5.090893e-002, -6.903955e-003, 3.943335e-003, -3.589615e-002, -3.008374e-003, 1.543965e-002, -3.629416e-004, 2.324766e-002, 1.768197e-002, -7.664967e-003, -4.387811e-002, 9.112325e-003, -2.027097e-002, 2.141105e-002, -4.715126e-002, 2.061630e-002, 7.489914e-002, -4.859421e-002, -3.672091e-003, -2.249917e-002, -2.684379e-002, 5.531779e-002, 7.312630e-002, 2.369789e-002, 5.527309e-002, -4.665601e-003, 3.352447e-002, 6.826157e-002, 3.179513e-002, -2.853874e-002, -4.378014e-002, 5.379648e-003, 2.843321e-002, -8.658178e-002, -3.275946e-002, -6.483977e-003, -3.402820e-002, -3.779401e-003, 4.636471e-002, 1.243638e-002, -1.523509e-002, -2.140235e-002, -3.430775e-003, 4.401975e-002, 4.307485e-002, -3.019683e-002, -5.836513e-002, 3.032580e-002, -2.226168e-002, 8.357406e-003, -3.860393e-002, -8.509001e-003, -1.046601e-003, 3.443673e-003, -2.054562e-002, -1.217584e-002, 4.770896e-002, -2.022474e-002, -3.303659e-002, 5.108560e-002, 2.933316e-002, 2.855014e-002, 1.151113e-002, -8.867879e-003, -9.919042e-003, -2.003154e-002, -1.744847e-002, -2.588870e-002, -3.762043e-002, -6.637545e-003, 4.247143e-002, 5.604181e-002, -2.037796e-002, 7.056523e-002, -4.011979e-002, -1.855986e-002, -1.401333e-002, -2.623329e-003, -2.900366e-002, 4.572105e-003, 8.035977e-003, 1.014185e-001, -7.317287e-003, -1.506731e-002, -5.587701e-002, -4.182612e-002, -2.592558e-002, -1.558370e-002, -3.184988e-002, -1.676243e-002, -1.920908e-002, 2.608893e-002, 6.576983e-002, -3.945675e-002, 3.230883e-002, 6.237870e-002, -5.565237e-002, 2.120588e-002, 2.083317e-002, -3.752421e-002, -3.367666e-002, 7.522604e-002, 2.582273e-002, 3.574838e-003, 5.494988e-002, 8.384653e-004, -2.738960e-002, 6.792745e-003, -

© ISO/IEC 2004 — All rights reserved


Copyright International Organization for Standardization
Provided by IHS under license with ISO
No reproduction or networking permitted without license from IHS
Not for Resale

3.784531e-003, -1.241675e-003, -7.479170e-003, 1.104399e-003, -8.639517e-003, -2.908794e-002, 1.879501e-002, -3.499768e-002, 5.299021e-002, 4.259952e-002, -1.451859e-002, -2.548201e-002, 4.943787e-002, -1.402610e-003, -3.463123e-002, 1.511664e-002, -1.035960e-002, 4.567967e-002, -1.642101e-002, 3.143229e-003, 2.454541e-002, 2.057562e-002, 1.876300e-002, 1.606868e-002, 1.230010e-002, 2.994050e-002, 3.078239e-002, 5.344007e-003, 1.666513e-002, 6.573049e-005, -7.297185e-003, 2.100708e-002, 7.581730e-002, -3.460861e-002, -1.924569e-002, 6.511458e-002, 4.879505e-003, -4.738371e-002, 1.262813e-002, 1.123378e-002, 2.662965e-002, 1.624803e-002, 2.295975e-002, 6.897698e-003, 2.118456e-002, 1.046269e-003, 1.597430e-002, 1.324247e-003, 3.686825e-003, -4.235580e-004, 7.384528e-003, -2.151750e-002, 2.171274e-002, 3.844998e-003, 1.276715e-002, 4.134011e-002, -2.251758e-002, 2.501363e-002, 1.652955e-002, 1.799684e-003, -1.693199e-002, 2.478180e-002, 3.505703e-002, 9.899457e-003, 2.267309e-002, 8.784647e-003, 1.830112e-002, 3.739273e-003, 1.080218e-002, 4.665767e-003, 1.839790e-002, -4.918450e-003, -3.222226e-003, -1.988397e-003, 2.237676e-002, 2.043724e-002, 3.160965e-002, -2.277915e-002, -7.453121e-002, -6.004756e-002, -5.160844e-003, 3.307203e-002, -1.859641e-002, 1.867352e-002, 2.861343e-004, -4.225539e-004, 1.374495e-002, 2.972721e-003, 9.030330e-003, 4.267898e-003, 1.478928e-002, -1.814041e-002, -4.743769e-003, 9.437043e-003, 5.321861e-003, 1.316687e-002, -2.738725e-003, -5.263240e-002, -2.250846e-002, 2.380398e-002, -1.029567e-002, -1.585717e-002, -1.957011e-002, 1.022787e-003, -3.263169e-002, -8.325726e-002, -8.325726e-002, -3.263169e-002, 1.022787e-003, -1.957011e-002, -1.585717e-002, 4.476555e-002, -7.455145e-002, 2.209949e-002, 2.698162e-002, 8.020370e-002, 3.842298e-002, 1.004266e-002, 4.300763e-003, -2.852261e-002, -3.120834e-002, -6.936899e-002, -7.329752e-002, -3.515956e-002, 4.363399e-002, -4.550268e-003, -6.529206e-002, 1.123372e-002, 3.644387e-002, 1.740108e-002, -5.991600e-003, -4.354672e-002, -1.076604e-001, -2.121976e-002, -8.180606e-004, -4.122192e-002, -1.890724e-002, -3.794472e-002, -2.627932e-002, 9.059036e-003, 7.181408e-003, 2.555193e-002, 2.180433e-002, -5.682335e-002, 8.112198e-002, 7.381312e-002, 3.943524e-002, 1.232323e-002, -2.500849e-002, -2.870771e-002, 2.701670e-003, 9.407131e-003, 1.732712e-002, 1.782426e-002, -1.028217e-002, -4.802620e-003, -4.683299e-002, 2.175472e-002, 2.408416e-002, 3.596378e-003, 3.902148e-003, 1.570212e-003, 7.015848e-003, 1.823188e-003, 1.498907e-002, -6.009748e-002, -9.080429e-003, -7.520047e-003, -7.198446e-003, 9.710393e-003, 2.691878e-003, 3.182094e-003, -1.941241e-003, 1.206910e-003, -6.135967e-003, -9.182000e-003, -2.464914e-002, 1.223851e-003, 3.024209e-003, -3.096831e-002, -3.139592e-002, 1.499395e-002, -5.240418e-002, -5.240418e-002, 1.499395e-002, -3.139592e-002, -3.096831e-002, 3.024209e-003, 3.790222e-003, -2.514495e-002, -1.338921e-002, -4.907451e-002, -5.167724e-003, 1.512950e-002, 7.258983e-002, 1.126997e-001, 1.383841e-002, -3.283276e-003, -7.797879e-003, 9.810950e-002, 2.178668e-003, -3.974852e-002, 6.225081e-003, 1.268496e-003, 4.489939e-003, -1.869805e-002, -6.319500e-002, -7.838345e-002, 7.787238e-002, 2.823601e-002, 6.189853e-002, 2.759692e-003, 4.140091e-003, 8.182177e-003, -4.453705e-003, -1.428143e-004, 1.076299e-002, -3.362047e-002, -5.227306e-002, -4.279960e-002, -3.979909e-002, -8.916906e-002, -5.014826e-002, 2.057190e-002, -8.653682e-004, -1.518036e-003, -1.350350e-003, -1.661209e-002, -1.906656e-002, -1.354214e-003, -3.435320e-002, -4.041378e-003, 1.094220e-003, -2.758255e-002, 9.309280e-003, -4.128056e-003, -1.365073e-003, -1.167909e-003, -7.532492e-003, -4.696034e-004, 3.447053e-003, -1.349784e-002, -1.190489e-002, 2.808451e-002, 9.849838e-003, -1.871706e-002, -1.830387e-003, 2.116713e-003, 1.084446e-003, -7.918279e-003, 4.385023e-004, 1.568066e-003, -2.584542e-003, 1.462135e-002, 1.343259e-002, 2.055054e-002, 3.184839e-002, -2.965353e-002, 2.061849e-002, 1.113757e-002, 1.113757e-002, 2.061849e-002, -2.965353e-002, 3.184839e-002, 2.055054e-002, 5.881633e-002, -3.467863e-003, 1.769517e-002, 1.999612e-002, -6.498327e-003, 2.324212e-002, 1.409347e-002, 4.423942e-003, -4.537930e-002, 5.125140e-002, -7.074306e-002, -5.263836e-002, -9.443922e-004, -1.197279e-001, -7.736944e-003, -9.780489e-003, -6.491571e-003, 5.366412e-003, -5.784898e-002, -3.039142e-002, -4.785552e-002, 6.400673e-002, 1.167295e-001, 2.234366e-002, -1.685519e-002, 7.857565e-003, -4.940676e-003, -5.684297e-003, 3.957052e-003, 3.023737e-003, 5.463261e-002, 1.386315e-001, -4.438886e-002, 2.401612e-002, 3.708039e-003, -2.700628e-002, -3.349944e-003, -1.616887e-002, -1.339002e-002, 5.215117e-003, -9.636915e-003, 1.034245e-002, -1.929307e-002, -4.258908e-002, 4.654086e-002, 1.699972e-003, 8.438111e-003, 2.778317e-004, 5.155045e-003, 1.181062e-002, 5.598115e-003, 7.950240e-003, 1.396818e-002, 2.524555e-002, 2.903814e-002, 2.888127e-002, 2.786358e-002, 3.085566e-004, -1.795805e-003, 3.177199e-003, 2.698612e-003, 8.907998e-003, 1.107315e-002, 1.579327e-002, 2.070368e-002, 1.001715e-002, -4.034451e-003, -1.944793e-003, 2.512359e-002, -1.745674e-002, 4.995477e-003, 2.683386e-003, 2.683386e-003, 4.995477e-003, -1.745674e-002, 2.512359e-002, -1.944793e-003, 1.531645e-004, -9.112112e-002, -2.820298e-002, -5.420685e-002, -1.647258e-002, -3.498496e-002, -8.149516e-003, -8.499376e-003, 3.055371e-002, -2.515103e-002, 1.037131e-002, -1.132726e-002, 4.288455e-002, -1.072385e-001, 1.409580e-002, -1.423877e-002, 1.842265e-003, 2.392494e-002, 1.160099e-002, 2.128701e-002, -4.426937e-002, -7.963587e-002, 7.433112e-002, 1.004090e-002, 1.280282e-001, 6.246400e-002, 3.414664e-002, 3.459771e-003, 2.559848e-002, 2.440887e-002, 4.575195e-002, 3.612990e-002, 2.516085e-002, 9.107192e-002, -6.156428e-002, -5.653395e-003, 2.538331e-002, 4.049913e-003, 1.132908e-002, -2.352468e-003, -1.692437e-003, 1.379261e-002,


© ISO/IEC 2004 — All rights reserved

Copyright International Organization for Standardization
Provided by IHS under license with ISO
No reproduction or networking permitted without license from IHS
Not for Resale

1.451761e-002, -2.876365e-003, 2.582325e-002, 3.900741e-003, 1.003420e-002, 2.478058e-002, 1.430981e-002, 1.342890e-002, 9.532121e-003, 7.846305e-003, 7.242803e-003, -2.324037e-003, 4.968483e-002, -9.137658e-003, 8.771420e-003, 1.241503e-002, 2.773033e-002, 1.565316e-002, 1.321217e-002, 3.901743e-003, 6.759375e-003, 3.930739e-003, 1.163300e-002, -2.426034e-002, 6.361724e-003, 1.955479e-002, 1.682389e-002, 1.682389e-002, 1.955479e-002, 1.203608e-001, -2.658715e-002, -3.227067e-002, 6.531154e-003, -1.652374e-002, 7.630932e-002, 1.525227e-002, -3.035136e-003, 1.806313e-003, -1.200409e-002, 7.849039e-002, 2.838260e-002, 1.012512e-002, 1.012512e-002, 2.838260e-002, -3.897791e-002, 2.833573e-002, 1.376766e-002, 1.113145e-002, 9.663384e-003, 3.010997e-002, 3.057570e-002, 5.162400e-003, 4.951332e-003, 3.169849e-003, -2.914760e-002, -6.595389e-002, -2.709019e-002, -2.709019e-002, -6.595389e-002, 5.184945e-002, -5.847925e-003, 4.163501e-003, 8.087262e-003, 1.348165e-002, -3.161538e-002, -7.655860e-003, 8.165809e-004, -2.960410e-003, 7.750923e-004, -1.763722e-002, 3.537303e-002, 4.104748e-002, 4.104748e-002, 3.537303e-002, 3.736468e-002, -3.596503e-002, -1.821886e-002, -4.157939e-002, -9.760220e-002, 3.346395e-002, -2.892883e-002, -5.045954e-003, -1.880556e-002, -2.044830e-002, 5.589612e-003, 8.548064e-002, 5.458274e-002, 5.458274e-002, 8.548064e-002, -5.348728e-002, -1.813308e-002, -1.784185e-002, 9.091630e-004, -8.560732e-003, -4.728741e-003, -8.321197e-003, -1.571941e-002, 3.208854e-003, -1.144213e-002, -1.007374e-001, -3.817289e-002, -9.323410e-004, -9.323410e-004, -3.817289e-002, -2.971971e-002, -1.137671e-002, 9.913386e-004, 1.766725e-002, -3.824120e-002, -7.636713e-003, 1.314051e-002, -5.254444e-004, -5.427360e-004, -2.289510e-003, 7.971139e-002, -6.767486e-002, -3.439775e-002, -3.439775e-002, -6.767486e-002, -5.168223e-003, -2.090374e-002, 8.588375e-003, -6.002304e-003, 1.471906e-003, -3.247305e-002, -8.552699e-003, -5.722909e-003, -6.968413e-003, -1.838396e-002, -3.170272e-002, 7.368455e-002, 6.543382e-002, 6.543382e-002, 7.368455e-002, -1.237850e-002, 1.215185e-002, -1.078725e-002, 2.671759e-002, 3.203753e-002, -7.459246e-003, -1.213972e-002, -8.864657e-003, -1.296237e-002, -9.546408e-003, -3.544383e-002, -5.653830e-002, -2.174627e-002, -2.174627e-002, -5.653830e-002, -1.052979e-001, -3.169424e-002, -3.747921e-003, -2.909988e-002, -4.402932e-002, -4.370686e-002, -2.149805e-002, -7.261801e-003, -6.365879e-003, -1.780588e-002, 7.778376e-002, 8.584875e-003, -3.204620e-003, -3.204620e-003, 8.584875e-003, 6.235276e-002, 8.644527e-004, -1.081083e-003, -6.007022e-003, 8.703971e-003, 2.268174e-002, 1.232708e-003, -7.389765e-003, -2.960695e-003, 4.435237e-003, 4.919559e-002, 1.694612e-002, -9.115686e-003, -9.115686e-003, 1.694612e-002, 6.742985e-002, -5.390011e-003, 2.512006e-003, -7.541568e-003, -1.369092e-002, 3.624332e-002, 6.919960e-004, -3.735507e-003, 1.153433e-003, 9.757420e-004, 4.334713e-002, -2.519484e-002, 1.749416e-002, 1.749416e-002, -2.519484e-002, 5.049146e-003, 7.196007e-003, 7.477771e-004, 1.037155e-002, 1.098013e-002, 7.701212e-003, 7.946181e-003, 7.936985e-003, 4.174827e-003, 1.687500e-003, -4.724552e-003, -3.629452e-002, -1.041234e-002, -1.041234e-002, -3.629452e-002, 3.137257e-002, -4.297179e-002, -4.626837e-003, -3.204046e-002, -5.875884e-002, 3.060263e-002, -1.427889e-002, -2.661899e-003, 2.072771e-003, -5.873417e-004, -2.418278e-002, -4.262911e-002, -7.727005e-003, -7.727005e-003, -4.262911e-002, -2.175634e-001, 2.351341e-003, 1.629339e-003, 7.350012e-003, 3.335310e-002, -2.473952e-002, 1.836264e-003, 4.733217e-003, 1.013223e-002, 1.630083e-002, -8.710548e-002, 1.190958e-002, 1.108763e-002, 1.108763e-002, 1.190958e-002, -2.045892e-001, 5.390132e-003, 7.366153e-003, 5.318917e-003, 4.027621e-003, -1.764932e-002, 7.739456e-003, 5.205909e-004, -2.039776e-003, 1.641796e-004, -9.471686e-003, -1.375456e-002, -2.716056e-002, -2.716056e-002, -1.375456e-002, 1.923337e-003, -4.250781e-002, -2.267059e-002, 2.291396e-002, 3.730124e-003, 4.878312e-002, 1.840004e-002, 3.808362e-003, 9.240050e-003, 2.034171e-002},
{1.480627e-003, -4.724363e-004, -1.087983e-002, -8.453553e-003, 5.275880e-004, 8.282359e-003, 1.971067e-002, -8.944474e-003, 1.968954e-002, 6.328962e-003, 2.045406e-002, 5.012120e-002, 2.045406e-002, 6.328962e-003, 1.968954e-002, -8.944474e-003, 1.971067e-002, 8.282359e-003, 5.275880e-004, -8.453553e-003, -1.087983e-002, -4.724363e-004, 1.631475e-002, 2.273243e-002, -1.263106e-002, -1.499616e-002, 1.693075e-002, 1.882530e-002, 1.254986e-002, 8.177589e-003, 2.733432e-002, 4.665158e-002, 8.578890e-003, -5.131190e-002, 5.074896e-003, -1.645214e-002, -2.233411e-002, -3.405573e-002, -2.850255e-002, -5.335200e-002, 2.700835e-002, -3.473753e-002, -2.116009e-002, 8.049329e-003, -9.373916e-003, -1.269087e-002, -6.127301e-002, -3.665955e-002, -2.732273e-002, 6.837978e-003, 2.109869e-002, -1.643549e-002, -1.699811e-002, -3.294518e-003, -8.438996e-003, 8.341156e-003, -3.223842e-002, -2.628480e-002, -6.065506e-002, -4.689016e-002, -3.702907e-002, -2.452268e-002, 1.391824e-004, -3.705350e-002, 2.692441e-003, -8.443877e-003, 1.586676e-002, 3.976917e-002, -1.928975e-002, 3.925460e-002, -9.848783e-003, -4.528168e-002, 1.907428e-002, -5.253410e-002, -4.278601e-002, 7.452806e-003, 5.586481e-002, 5.128758e-004, -4.837846e-002, -7.718266e-003, 2.249022e-004, -3.929816e-002, -1.161117e-002, -7.846708e-005, -3.735473e-002, -2.830527e-002, 8.988185e-004, -6.883693e-003, 2.485068e-002, 2.304002e-002, -2.796129e-002, -3.293585e-003, -2.950157e-002, -5.608420e-002, 3.640476e-003, -2.335845e-002, 8.927009e-003, 8.159055e-003, 2.011919e-002, 3.687266e-002, 2.120392e-002, 5.893582e-002, 1.943807e-002, 4.472539e-002, -9.185139e-003, 1.402660e-002, 3.750680e-002, -5.091671e-002, 6.058029e-003, -2.582868e-002, -2.995611e-002, 1.771983e-002, -9.011657e-003, 2.834933e-002, 6.852411e-002, -2.132862e-002, -4.015151e-003, 7.368136e-003, 1.162755e-002, 4.723572e-002, -

© ISO/IEC 2004 — All rights reserved


Copyright International Organization for Standardization
Provided by IHS under license with ISO
No reproduction or networking permitted without license from IHS
Not for Resale

1.128532e-002, 4.030654e-002, -2.932981e-002, -3.423429e-002, 3.414440e-002, 4.693804e-002, 7.006976e-002, 1.616074e-002, -2.400189e-002, 9.397460e-003, -3.954453e-002, 2.923089e-002, 2.191420e-002, 3.614842e-002, 7.144079e-003, 2.338417e-002, -2.281401e-002, -4.834547e-002, 5.293760e-002, -1.229709e-002, 4.206534e-002, 2.572749e-002, -1.074712e-002, -1.147651e-002, 1.878498e-002, -3.820547e-002, -1.988776e-002, 1.063599e-001, 8.441297e-002, -4.747633e-002, 1.830194e-002, 6.515680e-003, -2.351446e-002, -5.754955e-003, -3.583928e-002, 5.389969e-002, 1.182100e-002, 9.115634e-003, 4.772876e-002, -8.986837e-004, -6.036449e-002, 6.550199e-002, 3.993892e-003, -7.073436e-003, 3.239331e-002, -6.723096e-003, 7.840183e-003, 3.951712e-002, 6.848590e-002, 3.829077e-002, -1.804360e-004, -5.221502e-002, -9.119332e-003, 7.132980e-003, 1.756530e-003, 3.053633e-002, 6.363542e-002, 2.355221e-002, -2.405112e-002, 1.610493e-002, 1.031642e-002, -6.592687e-002, 7.130073e-002, -1.090609e-002, 7.102091e-003, 5.792006e-003, -4.415384e-002, 1.493380e-002, 2.691148e-002, -8.340867e-003, -8.645403e-003, -1.617085e-002, -4.675727e-002, -1.372690e-002, -1.969828e-002, 4.331753e-003, 3.412928e-002, -1.945837e-002, -5.867636e-002, 6.030992e-003, -3.484584e-002, -8.528675e-002, -1.103473e-002, 7.278267e-002, -1.194273e-002, 8.634487e-003, 2.667886e-002, -1.824147e-002, -2.188092e-003, -2.323666e-003, 3.010602e-003, 1.617277e-002, 1.919739e-002, -1.036759e-002, -3.516486e-002, -1.577236e-002, -4.500089e-002, -5.317297e-002, 7.538590e-003, -2.017523e-002, 1.767152e-002, 1.994742e-002, -7.123434e-003, -7.687706e-003, 2.978733e-002, 5.495389e-003, -6.518840e-003, 2.362791e-002, 3.139315e-003, 2.257664e-002, 2.793313e-002, 1.147250e-002, 7.447171e-004, -6.769044e-003, 8.661126e-003, 3.005871e-002, 2.165450e-003, 5.719993e-002, -2.151048e-002, -4.426756e-002, -4.427552e-002, 6.647602e-004, 3.564914e-002, -2.460455e-002, 1.446999e-002, -2.339417e-002, -3.105819e-003, -2.776233e-002, -9.669256e-003, 2.408316e-002, 2.187482e-002, 1.755736e-002, 2.052258e-002, 1.262185e-003, 1.604278e-002, 2.420160e-002, 7.367863e-003, -2.684123e-004, 3.548547e-003, 5.932303e-003, -2.727310e-002, -2.056620e-002, 4.732386e-002, 4.824508e-004, 3.357930e-002, -4.396352e-003, -3.598563e-002, -1.580868e-002, -1.876605e-002, 3.101837e-003, -1.088521e-002, -1.223039e-002, 1.438434e-002, 7.483953e-003, 8.143117e-003, 3.907033e-003, -1.100921e-003, 7.920311e-003, 8.706950e-003, -1.709416e-002, -3.039457e-002, -1.610462e-002, -3.333342e-002, -2.144225e-002, -2.609362e-002, 1.899345e-002, 1.054024e-002, 4.204650e-002, 1.550866e-002, -2.190456e-002, -4.912055e-002, -4.490095e-002, -2.718598e-002, -2.107163e-002, 7.067017e-003, 7.067261e-003, 1.637460e-003, 2.227532e-003, -4.848278e-003, 4.333758e-003, -1.385137e-002, -2.872440e-002, -2.443641e-002, -2.890436e-002, -2.965103e-002, -6.861764e-002, -1.374245e-003, 8.984835e-002, -1.050292e-002, 1.736486e-002, -2.155072e-002, -5.589376e-003, 1.732127e-003, -1.342107e-002, -1.342107e-002, 1.732127e-003, -5.589376e-003, -2.155072e-002, 1.736486e-002, -8.287317e-003, 8.830166e-002, -1.053700e-001, 7.879693e-002, -2.134479e-002, -1.739428e-002, -2.509828e-002, -1.315411e-002, -9.112226e-003, -7.096411e-002, 2.258476e-002, -6.197285e-002, -8.919907e-004, 1.797031e-001, -4.627827e-003, 6.893395e-002, 6.022873e-002, -9.334267e-003, -3.799436e-002, -5.346162e-002, -4.137128e-002, 6.027714e-002, -3.044499e-002, -1.012384e-001, -3.600066e-002, 4.408047e-002, 3.988688e-002, -3.879528e-003, -1.806729e-002, -2.647917e-002, -2.446049e-002, -5.242510e-003, 3.404984e-002, -3.412026e-002, -4.386540e-002, 2.190393e-002, 6.137562e-002, 1.748808e-002, -7.634142e-003, -3.814975e-003, -9.802930e-003, -1.687209e-002, 3.224721e-003, -3.825819e-002, 1.299741e-002, -1.835018e-002, 3.625180e-003, 1.660874e-002, 2.506974e-002, 2.231721e-002, -5.136126e-003, -2.503211e-003, 2.012016e-003, -1.200337e-003, -5.140965e-002, 2.952650e-002, 9.663701e-003, 1.067480e-003, 3.495135e-003, 1.398937e-002, 7.823402e-003, -4.625133e-003, -5.083326e-003, -5.167333e-003, -1.407589e-002, -1.152295e-002, -1.747100e-002, 1.342239e-002, -2.123723e-002, 2.584048e-002, -3.148544e-002, -2.576004e-002, -2.576004e-002, -3.148544e-002, 2.584048e-002, -2.123723e-002, 1.342239e-002, -1.987129e-002, -6.443754e-002, -3.592146e-002, -4.127642e-002, -7.551058e-003, 2.641054e-002, 4.713410e-003, 4.796449e-002, 1.019374e-001, 3.400544e-002, -1.540475e-002, -9.156621e-002, -1.434256e-002, -2.326012e-002, -1.589708e-002, -2.448097e-003, 1.488172e-002, 4.000690e-002, 7.500248e-002, 1.051278e-001, 1.059296e-001, -3.393772e-003, 1.137922e-001, 5.660868e-002, -2.264830e-002, -2.120639e-002, -9.501501e-003, -2.984124e-003, 2.304887e-002, 2.880557e-002, 4.349344e-002, -6.961622e-002, -2.211456e-001, 1.024781e-001, -5.666431e-002, 1.250431e-002, -2.525075e-002, -6.975251e-003, -3.887174e-003, 2.245682e-002, 2.720295e-003, -1.447476e-002, 6.077298e-003, -5.341853e-002, 4.199346e-002, -7.204742e-002, 1.463235e-002, -2.204958e-003, -7.343774e-003, -1.219101e-004, 1.873188e-003, 2.647001e-003, 1.236076e-002, 2.461479e-003, -6.620649e-002, 7.501909e-002, -3.228377e-002, -1.427051e-002, -3.274440e-003, -8.449455e-004, -1.817071e-003, 8.592847e-003, 8.114010e-003, -1.711214e-002, -3.137357e-003, -1.581616e-002, 1.691197e-002, -1.635710e-004, 2.565992e-002, -9.863466e-003, -2.433487e-003, -2.453602e-002, -2.453602e-002, -2.433487e-003, -9.863466e-003, 2.565992e-002, -1.635710e-004, -3.184845e-002, -7.380969e-002, 3.956626e-002, -4.262362e-003, 5.161174e-002, 4.886610e-002, 4.561057e-002, 5.636971e-002, 9.415026e-002, -6.293277e-002, 8.683114e-002, -3.760086e-002, 1.947483e-002, 2.307832e-002, 1.280733e-003, -3.394256e-002, 8.989247e-003, -9.648614e-003, -8.850164e-003, -1.492634e-002, 8.277652e-003, -2.193518e-002, 2.960521e-002, -5.635309e-002, -1.969847e-002, 4.754105e-003, -1.325665e-002, -1.721845e-003, -1.559621e-003, -2.061284e-002, -9.447011e-003, -


© ISO/IEC 2004 — All rights reserved

Copyright International Organization for Standardization
Provided by IHS under license with ISO
No reproduction or networking permitted without license from IHS
Not for Resale

1.508638e-002, -3.628027e-002, 1.843950e-002, 6.186074e-003, -3.908211e-003, 5.430856e-003, 3.048348e-003, -1.149870e-002, -1.079720e-002, -1.316251e-002, -1.640327e-002, -6.569396e-003, 5.133130e-003, -4.213037e-002, 3.090763e-002, 7.666328e-003, 4.093644e-003, 5.227386e-003, 4.723026e-003, 4.730410e-003, 4.661970e-004, -4.332582e-003, 1.623014e-002, 1.711271e-003, -1.922371e-002, -2.200169e-002, -2.196296e-002, -9.274215e-003, -1.022284e-002, 6.379401e-003, -4.057640e-003, -4.792306e-003, -4.774968e-003, -2.351005e-002, -1.986697e-002, 1.254258e-002, -1.650438e-002, 2.810563e-002, -1.247297e-002, 6.137288e-003, 5.243297e-003, 5.243297e-003, 6.137288e-003, -1.247297e-002, 2.810563e-002, -1.650438e-002, 1.466979e-002, 5.299665e-002, -5.408598e-003, 1.460917e-002, 1.158629e-002, 1.594088e-002, -7.447138e-003, 2.222930e-002, 6.092609e-002, 7.423269e-002, 4.949643e-002, -1.077303e-001, -6.013138e-002, -4.520428e-002, 5.839323e-002, 2.738489e-002, 2.780974e-004, 9.675384e-003, 3.344150e-002, 2.629801e-002, 9.980567e-002, -3.811838e-002, 1.302454e-002, -2.377423e-002, 4.088253e-002, 6.803496e-003, 1.964512e-002, 1.317189e-002, 4.858258e-003, 1.386754e-002, 2.607116e-002, -7.459095e-003, 2.616600e-002, 6.494895e-002, -4.393171e-002, -3.520618e-002, -1.219998e-002, -2.159211e-002, -6.767155e-003, 5.352416e-003, 7.665609e-003, 1.388250e-002, -7.402586e-003, -2.282414e-002, -5.599988e-002, 6.991835e-003, 2.299811e-002, -9.792511e-003, -1.846442e-003, -1.255203e-003, 5.848457e-003, 1.306081e-002, 5.479238e-003, -5.532505e-003, 5.108727e-003, -2.982651e-002, -2.912505e-002, -5.391043e-003, -1.382227e-002, -6.546710e-003, -2.233989e-003, 5.508072e-004, -1.381294e-003, -1.563398e-002, -1.833487e-002, -1.332534e-002, -3.328130e-002, 9.238999e-003, -3.922591e-002, -3.922591e-002, 9.238999e-003, 6.812225e-002, -4.617046e-002, -2.284411e-002, -6.405221e-003, -1.671649e-002, 1.346610e-002, -4.550817e-003, 6.287945e-003, -2.366925e-003, -1.023670e-002, 2.211115e-002, 3.262785e-002, 1.023325e-002, 1.023325e-002, 3.262785e-002, -5.638435e-002, 1.316530e-001, 3.611488e-002, 2.062376e-002, 5.418465e-002, -5.104056e-002, 4.505119e-002, 2.304923e-002, -2.425455e-003, 5.004565e-003, 3.364532e-002, -2.799477e-003, 3.837607e-003, 3.837607e-003, -2.799477e-003, 4.302778e-002, 1.285466e-002, 8.760561e-003, 8.392196e-003, 8.363030e-003, -3.136790e-002, -3.238034e-003, -2.634848e-003, -1.995520e-003, 1.395634e-003, 2.982388e-002, 1.129772e-002, -1.026285e-003, -1.026285e-003, 1.129772e-002, -1.114895e-001, -2.216184e-002, -4.519231e-003, 3.018700e-002, -2.071387e-002, -3.009739e-002, -3.697951e-003, 1.335732e-003, 8.799518e-003, 1.042411e-003, -4.472075e-002, 3.016345e-002, 6.922325e-002, 6.922325e-002, 3.016345e-002, -1.683398e-001, -3.639150e-002, 6.080757e-003, -5.334641e-002, -4.616108e-002, -3.335839e-002, -5.414495e-003, -7.301195e-003, -1.601471e-002, -2.254312e-002, 4.538797e-002, -7.175535e-002, -1.548676e-002, -1.548676e-002, -7.175535e-002, 2.192931e-002, -5.643032e-003, 5.172752e-003, 9.953212e-003, 5.783519e-003, -2.356463e-002, -1.984193e-002, 4.371042e-003, -2.323435e-003, -3.282380e-003, -1.177334e-001, 3.782893e-002, 2.740536e-002, 2.740536e-002, 3.782893e-002, 8.008352e-002, 3.055740e-002, 7.434486e-003, 5.543330e-003, -7.362223e-003, 2.439770e-002, -2.298142e-002, -1.901965e-003, 5.703241e-003, -6.472760e-003, 3.679316e-002, 5.826126e-002, 3.865996e-002, 3.865996e-002, 5.826126e-002, -1.233801e-001, -4.216655e-003, -3.718173e-002, 6.003226e-003, -1.133229e-002, -1.847381e-002, -1.824764e-002, -7.809858e-003, -6.275258e-004, -1.246754e-002, 9.679511e-002, -1.115561e-002, -2.287942e-002, -2.287942e-002, -1.115561e-002, -9.237831e-002, -1.909690e-002, 1.176707e-002, 8.303048e-003, -2.669786e-002, -3.387945e-002, -1.244051e-002, -1.671092e-003, -5.465591e-003, -1.331681e-002, 6.079263e-002, -5.812055e-002, -2.720250e-002, -2.720250e-002, -5.812055e-002, 3.749741e-002, -3.737937e-003, -4.008910e-003, -4.783697e-003, -1.595805e-003, 2.516873e-002, 1.274033e-002, 3.254731e-003, -2.977186e-003, 7.565455e-003, 8.407321e-002, 5.260854e-002, 1.260540e-002, 1.260540e-002, 5.260854e-002, 2.569036e-002, 1.478578e-002, 6.997300e-003, -3.324840e-003, 2.721297e-002, 3.032909e-002, 1.949879e-003, -1.283577e-003, 3.671990e-003, 2.179962e-002, -4.228093e-002, -2.813460e-002, 2.004217e-002, 2.004217e-002, -2.813460e-002, -1.010598e-001, -1.859683e-002, -1.219332e-002, -5.694597e-003, -2.136289e-002, -4.074260e-002, -1.300783e-002, -1.216932e-002, -5.544190e-003, -7.609491e-003, -4.960028e-002, -1.697446e-002, 3.672974e-002, 3.672974e-002, -1.697446e-002, -3.760757e-002, -8.985352e-003, -1.170569e-002, 4.013208e-003, 3.787309e-003, 7.418463e-003, 9.378927e-004, -5.754017e-004, -8.548726e-003, 3.386432e-003, -9.107549e-002, 5.966390e-003, 2.117136e-002, 2.117136e-002, 5.966390e-003, 8.333399e-003, 2.458995e-002, 2.594053e-003, -4.744780e-003, 4.471876e-003, -1.860603e-002, 2.594916e-003, 9.685375e-004, 3.271843e-003, -2.233550e-003, -1.092422e-002, -2.247117e-002, -7.712063e-003, -7.712063e-003, -2.247117e-002, -2.229900e-002, 3.159971e-002, 6.931339e-003, 1.808646e-002, 4.136607e-002, -1.357382e-002, 5.198244e-003, 1.347151e-003, 6.372150e-003, 1.145337e-002, -1.832548e-002, -3.986258e-002, -3.021013e-002, -3.021013e-002, -3.986258e-002, -6.410161e-002, -1.668312e-003, 2.378139e-002, 2.159462e-002, 4.610967e-002, 2.863756e-002, 3.113819e-003, -4.938645e-004, 1.291506e-002, -2.596730e-004},
{1.934613e-003, -1.663579e-004, -8.779598e-004, 1.128381e-002, 2.922930e-003, -1.832165e-002, 4.652213e-003, 1.021648e-002, -2.829841e-003, -6.259329e-003, 7.459897e-003, -1.007410e-003, 7.459897e-003, -6.259329e-003, -2.829841e-003, 1.021648e-002, 4.652213e-003, -1.832165e-002, 2.922930e-003, 1.128381e-002, -8.779598e-004, -1.663579e-004, 6.129390e-003, 3.192234e-003, -2.571458e-003, 1.351147e-002, -2.953000e-003, 7.090847e-003, 1.828680e-002, -2.055266e-002, -3.405811e-005, -3.232407e-002,

© ISO/IEC 2004 — All rights reserved


Copyright International Organization for Standardization
Provided by IHS under license with ISO
No reproduction or networking permitted without license from IHS
Not for Resale

2.475120e-002, 3.460928e-002, -3.355806e-002, 1.830852e-003, 7.310843e-003, 6.392262e-003, 6.591916e-003, -1.382445e-002, -5.731773e-002, -6.744129e-003, -3.083098e-003, 5.297564e-003, 3.429131e-002, 2.249409e-002, 2.848445e-002, 4.075727e-003, 9.069011e-003, -2.213019e-002, -3.744025e-004, 1.177638e-002, -3.889622e-002, -5.842604e-003, -4.819387e-002, -5.558247e-002, 1.858545e-002, -1.312032e-002, 2.534549e-002, -8.858043e-005, -8.374305e-003, 3.289857e-003, 1.655300e-002, -4.262098e-002, 3.025120e-002, -1.663386e-002, -4.694641e-002, 7.885395e-003, 9.777732e-003, -1.217012e-005, 1.835377e-002, 3.365229e-002, 2.421860e-002, -2.441795e-002, 7.014802e-003, -3.735318e-002, -3.047324e-002, -3.400294e-002, -2.255955e-002, -5.054536e-002, -1.608490e-002, -1.012048e-002, -6.232368e-002, 5.365833e-002, 4.125674e-002, -1.387365e-002, 4.158077e-002, 1.768316e-002, 3.168010e-003, 3.443549e-002, -5.624091e-002, -3.389141e-002, 5.279065e-002, 5.392790e-002, 6.363937e-002, -2.191152e-003, 3.853343e-003, -5.681156e-003, -1.919482e-002, 2.466584e-003, -1.929885e-002, -2.355826e-002, 1.485457e-002, -2.878935e-004, 1.773155e-002, 3.232366e-002, 7.747850e-003, -1.381084e-002, 1.923467e-002, -8.954247e-003, 4.762274e-002, -1.330807e-002, 1.815731e-002, -1.862784e-002, -1.169696e-002, -1.744277e-002, 1.805357e-002, -1.276131e-003, -1.374874e-002, -1.206198e-002, -5.714279e-003, 3.530162e-003, -5.470712e-002, -6.809856e-002, -1.378001e-002, -3.571570e-002, 4.659097e-002, 2.019283e-002, -1.703353e-002, -3.234113e-004, -3.151066e-003, -2.259495e-002, 4.425847e-003, 3.074028e-002, -1.556948e-002, 3.858577e-003, -3.248169e-002, -1.590714e-002, -1.456249e-002, 8.199076e-002, 5.671639e-002, 2.665857e-002, -1.211200e-002, -1.803715e-002, -2.698047e-002, -6.871523e-002, -1.665848e-002, -7.472896e-002, 4.439733e-002, -4.103017e-002, 6.409762e-002, 1.914767e-002, 2.918429e-002, 1.601174e-002, 2.999540e-002, -1.237982e-002, 1.748242e-002, -1.424156e-002, 4.508291e-003, -4.871386e-002, -4.838467e-003, -8.902462e-003, -5.152369e-003, 1.873233e-002, 2.613263e-002, -4.093128e-002, -3.070004e-002, -5.744297e-002, -4.421685e-002, 3.042278e-002, 4.331213e-002, 3.139880e-003, 1.572248e-003, 4.847673e-003, 2.407181e-002, 4.045776e-003, 5.246287e-003, 5.522368e-003, 1.818115e-002, 4.848176e-002, 2.538440e-002, -2.223339e-002, -7.990992e-002, 9.241963e-003, 5.925065e-002, 5.710155e-002, 3.754371e-002, -2.999889e-002, -1.297527e-002, -5.209085e-002, -2.661254e-002, 4.841585e-003, -1.639963e-002, 3.642407e-002, 1.727600e-002, 6.863804e-002, -1.564457e-002, -3.198121e-002, 1.985926e-002, -3.674367e-002, 3.127066e-002, 7.157568e-002, 4.178355e-002, -5.513202e-002, 2.152317e-002, 6.385876e-002, 1.859074e-002, 1.666622e-002, 4.004947e-002, -8.801711e-003, -1.034775e-002, -9.937385e-003, -2.271465e-003, -1.435991e-002, -2.638153e-003, 1.405261e-002, 3.414869e-003, 3.418469e-002, -2.587808e-002, -5.499565e-002, 3.747131e-002, 5.165295e-002, 2.581186e-002, -1.541553e-002, 7.901750e-002, 7.101993e-003, 3.727055e-002, -1.248284e-002, -7.701726e-003, 1.408850e-002, 5.178862e-003, -9.483843e-003, -1.251677e-002, -1.452097e-002, 1.520241e-003, -7.085822e-003, 4.137610e-003, -2.704494e-002, -2.106110e-002, 2.380529e-003, 5.514969e-002, -1.940330e-002, 5.863904e-002, -1.129664e-002, -5.423824e-002, -2.128933e-002, 1.693192e-002, 1.243733e-002, -1.819344e-002, -2.507569e-002, -8.519044e-003, -1.497690e-002, -1.782730e-002, -1.814514e-002, -1.959608e-002, -8.017899e-004, -1.591834e-003, 3.240969e-002, 2.225373e-002, 3.099011e-004, -4.510500e-002, -4.810828e-002, 5.009112e-002, 2.221784e-002, 2.609185e-003, -1.920759e-002, -4.578933e-002, -6.101446e-002, 3.213413e-002, -1.653068e-003, -5.568218e-003, -1.390074e-003, -2.431714e-002, -8.906636e-003, -7.968067e-003, -7.565835e-003, -1.513004e-002, -7.325679e-004, -1.249982e-002, -8.450062e-003, 1.635418e-003, 9.712968e-003, -3.960245e-004, -7.295406e-002, 4.833830e-002, 8.307731e-002, -2.573210e-002, 4.006882e-002, -7.539224e-003, -8.809260e-002, 2.309782e-002, 7.009577e-003, 6.005411e-003, 8.590115e-003, -1.949115e-002, -3.712979e-003, -1.670661e-002, -1.937097e-003, -1.387103e-003, -8.147770e-003, -2.227485e-003, -1.932693e-003, 2.293526e-004, 1.200712e-002, -1.667442e-002, 7.262488e-003, -2.124959e-002, 3.846764e-002, 6.148330e-003, -2.047970e-003, -1.170107e-002, -7.621963e-003, -1.084259e-002, -1.610868e-002, -1.610868e-002, -1.084259e-002, -7.621963e-003, -1.170107e-002, -2.047970e-003, 3.166672e-002, -9.336637e-002, 1.028776e-001, 5.291376e-002, -1.059506e-001, -3.600880e-002, -3.878562e-003, 2.953726e-002, -2.599826e-002, -2.058420e-002, -1.230951e-002, -1.363368e-001, -8.605213e-002, -3.788628e-002, -9.841636e-003, -2.444427e-002, -4.705964e-002, -3.404364e-002, -5.370824e-002, -4.766446e-002, -5.239457e-002, 9.927046e-002, 8.792615e-002, 2.507628e-002, -2.353273e-002, 6.067328e-002, 6.445603e-002, 2.360189e-002, -3.559415e-003, -2.300405e-003, -3.811237e-003, -3.865032e-003, -8.621089e-002, -6.127775e-002, -1.823678e-002, -8.844240e-004, -2.346454e-002, 1.765275e-002, 1.644475e-002, -7.484549e-003, -2.864245e-003, 9.140739e-003, 1.015846e-002, -7.869610e-002, -3.691694e-002, -9.267074e-003, 2.952977e-002, 6.979050e-003, -4.522495e-003, -1.602126e-003, -6.852705e-003, -1.239040e-003, -2.102493e-003, -2.410513e-002, 2.123686e-002, -1.217320e-002, -3.986184e-002, -2.962527e-003, -5.584451e-003, -3.693353e-003, -4.385714e-003, -5.761260e-003, 4.647875e-003, -2.470336e-003, -1.869343e-002, -2.347112e-003, -2.236974e-002, -1.101741e-002, 2.271869e-002, 5.484536e-003, 6.911759e-003, 1.363326e-003, 1.363326e-003, 6.911759e-003, 5.484536e-003, 2.271869e-002, -1.101741e-002, -6.071781e-002, -2.371317e-002, 6.407992e-002, 2.098838e-002, -1.438095e-002, -3.644457e-002, -3.742577e-002, -1.016836e-001, 4.294257e-002, 1.036247e-001, -8.993572e-003, 8.590176e-002, 6.944673e-002, -4.138649e-002, -6.229700e-002, -3.850747e-002, -2.724668e-002, -4.113697e-002, -2.593038e-003, -3.714938e-002, -


© ISO/IEC 2004 — All rights reserved

--`,,```,,,,````-`-`,,`,,`,`,,`---

Copyright International Organization for Standardization
Provided by IHS under license with ISO
No reproduction or networking permitted without license from IHS
Not for Resale

4.473531e-002, -7.891626e-002, -1.156180e-001, -1.886761e-001, 1.686080e-003, -6.005606e-004, -3.251457e-003, -6.097820e-004, -2.351687e-002, -2.886029e-002, 3.220695e-002, -2.064164e-002, 5.096221e-002, 3.762898e-002, -4.150229e-002, 1.300916e-003, 9.426775e-003, 3.931086e-003, 1.181148e-003, -1.683322e-002, -1.192363e-002, 1.001210e-002, 5.618143e-003, -7.161864e-003, -5.040983e-002, -1.319192e-002, -1.334979e-002, -2.427740e-003, -5.264577e-003, 1.049526e-004, -1.252435e-002, -7.377547e-004, -2.712874e-003, -1.796110e-002, -2.446671e-002, -4.079800e-002, -3.516699e-002, -6.787409e-003, -5.547478e-003, -8.398579e-003, -1.860771e-003, -7.983511e-003, -9.340731e-003, -3.212028e-003, -2.175122e-002, -3.737899e-002, 2.434103e-003, 8.121705e-003, 4.882599e-003, -2.214146e-002, -2.513614e-002, 1.018843e-002, 1.018843e-002, -2.513614e-002, -2.214146e-002, 4.882599e-003, 8.121705e-003, -1.570643e-002, -3.603984e-002, 3.193678e-003, -4.583373e-002, 4.135746e-002, -1.196727e-002, -3.068188e-003, -2.241488e-002, -1.141240e-001, -4.501121e-002, 3.828393e-002, -6.016665e-002, 7.743006e-002, -1.233496e-002, 5.501849e-004, 9.441112e-003, 1.584089e-005, 9.195246e-004, 7.147518e-002, 7.091445e-002, -7.108924e-002, 5.703042e-002, -2.256790e-002, -3.670904e-002, -9.475327e-003, -2.781800e-002, -5.620695e-003, 3.231966e-003, -6.766465e-003, -2.281233e-002, 1.226990e-002, -1.487258e-002, 1.147005e-002, -2.714501e-002, 2.383263e-003, -1.045430e-002, -1.095036e-002, -7.518560e-003, 7.620478e-003, -1.467824e-002, -1.393066e-002, 5.341151e-003, 1.851711e-002, -1.536189e-002, -2.736061e-002, 4.456264e-002, 2.442882e-002, -8.222983e-003, -1.352490e-002, -3.529648e-003, -6.874732e-003, 3.752741e-003, 3.905826e-003, 7.124475e-003, 2.126267e-002, 7.302702e-003, 9.225656e-003, 2.463853e-002, 1.062048e-002, 4.228343e-003, 4.840108e-004, 4.233168e-004, 5.049896e-003, 6.107231e-003, 2.023800e-002, 4.307923e-002, 1.572192e-002, -1.376826e-002, -1.111109e-002, -5.841350e-003, 5.954827e-003, 1.483356e-003, 1.483356e-003, 5.954827e-003, -5.841350e-003, -1.111109e-002, -1.376826e-002, -5.491042e-002, -4.568123e-002, -9.257764e-002, -4.224872e-002, 4.158770e-002, 6.296388e-002, 3.906118e-002, 3.314536e-002, -1.600039e-002, -2.141078e-002, 5.744829e-002, 3.798605e-002, 1.104482e-002, -6.222047e-002, 5.186169e-002, 3.551251e-002, 9.217980e-003, -3.466225e-003, 3.735959e-003, -2.545973e-002, -8.967346e-002, 2.370734e-002, -9.879196e-003, -6.978415e-003, 2.752208e-002, 2.276681e-002, -2.015292e-002, -1.039927e-002, -1.380568e-002, -8.347631e-003, -7.604186e-003, 4.116083e-003, -7.080086e-002, -3.841618e-002, -3.736269e-002, -8.025511e-003, -8.536159e-003, 4.030151e-003, 6.026120e-003, -9.149437e-003, -1.549200e-002, -2.089183e-002, 3.725444e-003, -6.304955e-003, -7.114608e-003, 6.091048e-003, 2.655099e-002, 5.618625e-003, 8.773633e-003, -2.337731e-003, -1.310316e-002, -1.281226e-002, -7.793576e-003, 1.269658e-002, 3.706193e-002, 1.254292e-002, 3.608524e-002, 1.563279e-002, 7.146885e-003, 2.387305e-003, -4.079435e-003, -7.540805e-003, 1.965982e-003, 9.154854e-003, 8.675300e-003, 2.654270e-002, -6.692277e-003, 1.261996e-002, 3.847839e-004, 3.847839e-004, 1.261996e-002, -3.059776e-002, 1.796120e-001, 4.740911e-002, 1.102178e-002, 5.121324e-002, -2.911203e-002, 1.082821e-002, 3.530855e-002, 3.272142e-003, 3.232658e-002, -9.635711e-003, 4.054490e-002, 2.954780e-003, 2.954780e-003, 4.054490e-002, 6.593517e-002, -3.513469e-002, -2.166756e-002, -3.378189e-003, 2.701169e-003, 1.164035e-002, -1.697836e-003, -2.032346e-003, -1.176843e-003, 4.284842e-003, 1.881928e-003, -1.491563e-002, -4.930096e-004, -4.930096e-004, -1.491563e-002, 1.452248e-001, -2.626014e-002, -1.799175e-002, -2.428986e-002, -7.056871e-002, 4.189717e-002, -8.632390e-003, -5.093894e-003, -9.192465e-003, -1.601034e-002, -2.615902e-002, -1.782891e-002, -2.312500e-002, -2.312500e-002, -1.782891e-002, -6.744238e-002, 5.701763e-002, 1.183411e-002, 2.037216e-002, 1.808172e-001, -6.619704e-002, 2.194697e-002, 1.040122e-003, 5.730595e-003, 1.345785e-003, -8.267718e-002, 2.062474e-002, 6.110944e-003, 6.110944e-003, 2.062474e-002, -7.934164e-002, -5.943288e-002, -5.719617e-002, -4.192040e-002, -4.125129e-002, -2.663405e-002, -1.305165e-002, -7.655225e-003, -5.384027e-003, -1.137748e-002, 1.051535e-001, 1.487076e-002, -6.580813e-003, -6.580813e-003, 1.487076e-002, 5.826032e-002, -1.589790e-002, -7.203147e-004, -8.875438e-003, -1.484299e-002, -9.233463e-002, -1.864096e-003, 6.430967e-004, 2.144734e-003, 1.161193e-003, -9.618770e-002, 3.715670e-002, 7.199668e-003, 7.199668e-003, 3.715670e-002, 5.066380e-002, -1.620017e-002, -3.857372e-003, 1.017873e-002, -1.788311e-002, -5.120268e-002, 1.113339e-002, 2.462911e-003, 2.697291e-003, 9.847252e-003, 9.809505e-002, -4.129722e-002, -2.267970e-002, -2.267970e-002, -4.129722e-002, -5.380439e-002, -1.747556e-002, -1.311173e-002, -5.391489e-002, -6.731035e-002, -3.192153e-002, -5.755162e-003, -8.624741e-004, -1.098280e-002, -2.036468e-002, 3.052491e-002, 7.471014e-003, 3.556504e-002, 3.556504e-002, 7.471014e-003, 4.020608e-002, -5.884781e-003, -1.201667e-002, 2.801586e-002, 3.086064e-002, 2.507902e-002, 4.804247e-003, -1.740437e-003, -1.400292e-002, 1.724600e-003, -1.417491e-002, -6.130332e-002, -4.314224e-003, -4.314224e-003, -6.130332e-002, 7.128668e-002, 3.522592e-003, 1.780321e-002, 4.289027e-003, 1.530883e-002, -3.062263e-002, 1.079124e-002, 5.477596e-004, 3.430527e-003, -2.858917e-003, 1.071668e-001, -4.768693e-002, 2.010231e-002, 2.010231e-002, -4.768693e-002, 7.422509e-002, 4.547920e-003, 6.507067e-003, 1.175053e-002, 3.025687e-003, -5.460120e-002, -5.394993e-003, -3.802737e-003, -1.094686e-002, 9.153714e-003, -5.302933e-002, 6.867983e-002, 5.836406e-002, 5.836406e-002, 6.867983e-002, -3.529867e-002, -3.448316e-002, 7.976547e-003, -1.967892e-003, -1.653278e-002, -1.151279e-002, -9.409324e-003, -1.262159e-002, 2.477327e-004, -3.299278e-003, 5.451625e-003, 2.577489e-002, -7.254579e-002, -7.254579e-002,

© ISO/IEC 2004 — All rights reserved


Copyright International Organization for Standardization
Provided by IHS under license with ISO
No reproduction or networking permitted without license from IHS
Not for Resale

2.577489e-002, -8.461366e-002, -1.099861e-002, 9.967722e-003, 2.282710e-002, 3.666958e-002, -6.913541e-003, -1.212672e-003, -5.072219e-003, 6.414961e-004, 3.179563e-003, -1.936752e-002, 3.018160e-002, 1.946871e-002, 1.946871e-002, 3.018160e-002, -6.909176e-003, 9.176401e-003, 2.092270e-004, -4.200525e-003, -3.990925e-002, -1.978846e-002, 1.273479e-003, 2.875193e-003, -8.493666e-004, -3.763540e-003, -4.984793e-002, 2.429673e-002, 1.917047e-002, 1.917047e-002, 2.429673e-002, -5.727326e-002, -9.517811e-003, -1.706941e-003, 9.679323e-004, 8.449744e-003, -2.623739e-002, 7.797511e-003, 4.813077e-003, 3.999612e-003, 7.329845e-003, 1.143235e-002, 4.338841e-002, -2.225027e-002, -2.225027e-002, 4.338841e-002, -3.600170e-002, -2.620321e-003, 3.471741e-002, -9.348938e-003, -4.508348e-002, 2.829724e-003, 1.963153e-003, 6.579081e-003, -4.099257e-003, -6.943909e-003},
{-7.500377e-004, -9.527432e-003, 1.529480e-004, -9.006048e-003, -1.474215e-004, -2.680819e-003, 8.821857e-003, 1.066263e-002, 9.038208e-003, 2.162929e-002, 1.606387e-002, -1.292485e-002, 1.606387e-002, 2.162929e-002, 9.038208e-003, 1.066263e-002, 8.821857e-003, -2.680819e-003, -1.474215e-004, -9.006048e-003, 1.529480e-004, -9.527432e-003, 1.045593e-002, -1.956566e-002, 6.221346e-003, 2.793648e-002, 2.996471e-002, -3.915031e-003, 1.398406e-002, -4.289249e-002, -3.585619e-002, 3.719644e-003, -4.352861e-003, 8.531112e-002, -3.447023e-002, 1.946323e-002, -1.160071e-002, 3.337498e-003, -1.280599e-002, -1.394313e-002, 2.379257e-002, 3.269337e-002, 7.041892e-003, -3.316949e-002, -3.308507e-003, 1.685149e-002, -1.123592e-002, 1.547801e-002, -3.781204e-002, 6.821765e-003, -5.158406e-003, 3.873043e-003, 1.630839e-002, -3.986464e-002, 7.624511e-002, 1.002989e-002, 8.220789e-002, -3.189611e-002, -6.578428e-002, -7.340110e-003, -8.483702e-003, -1.490443e-003, 2.115207e-002, 1.476158e-002, -3.718885e-002, -1.995940e-002, 1.658517e-003, -2.411740e-004, -1.803014e-002, 2.319878e-002, 1.581323e-002, 6.123661e-002, 5.686376e-002, -4.729062e-003, 2.003521e-002, -1.003820e-002, 4.395461e-002, -3.900721e-002, 2.931837e-002, 2.728091e-002, -1.087887e-002, -2.571235e-002, -2.921911e-002, 4.725566e-002, 5.522865e-002, 1.248702e-002, -6.929427e-002, -2.013210e-002, -3.307942e-003, 2.883524e-003, -1.733626e-003, 3.584935e-002, 2.253818e-002, 4.282892e-002, 1.141099e-002, 9.837805e-004, -4.075968e-002, 2.876514e-003, -2.157082e-002, -1.275372e-002, -2.270348e-002, -2.482982e-002, -4.286495e-003, -2.967355e-002, 1.359794e-002, 1.616405e-002, -1.329382e-002, 5.162364e-002, -4.088938e-002, -3.009260e-003, -1.574103e-002, 1.441218e-002, -5.308053e-003, 5.052116e-002, 2.188795e-002, 1.641777e-002, 6.290119e-002, 4.591557e-002, 4.060892e-002, -1.874871e-002, 3.087871e-002, 3.583665e-002, 5.236753e-002, 3.701463e-002, 1.009454e-002, -3.993163e-002, 5.057125e-002, 8.220149e-002, -1.717965e-002, 1.007551e-004, -3.813217e-002, 1.339454e-002, 3.688246e-002, -3.362633e-002, 1.598052e-002, 2.073071e-002, 3.108567e-002, -2.849680e-002, -2.622541e-002, 3.435080e-002, 2.362741e-002, 1.377766e-002, -1.414960e-002, -1.316847e-002, -1.649795e-002, 2.816155e-002, 1.413327e-003, 1.643491e-002, 2.265023e-002, -2.997244e-003, -1.536767e-002, -1.751223e-002, -2.760858e-003, -2.541907e-002, -4.893061e-002, -1.077840e-002, 1.093073e-002, -1.033611e-002, 6.055088e-002, 3.397590e-002, 8.814933e-002, -5.062243e-003, 2.656346e-003, -1.915285e-002, -1.556517e-002, 2.191714e-002, 5.780833e-003, 2.378898e-002, 2.310661e-002, 5.397988e-002, -6.567477e-003, -6.661917e-002, -1.730818e-002, -4.223268e-002, 5.303525e-002, -1.043579e-003, -2.465524e-002, 1.616889e-002, -1.353176e-002, 2.481288e-002, -4.633548e-002, 2.961970e-003, 3.470352e-002, 1.828421e-002, 3.412842e-002, 1.558477e-002, 6.422780e-003, 2.282741e-002, 1.613039e-002, -1.499126e-003, -4.796891e-002, -7.734912e-002, 8.368566e-003, -5.156871e-002, -3.651977e-002, 5.143109e-002, -3.221703e-003, 2.163282e-002, 8.125765e-002, -2.505365e-002, -2.541446e-002, -6.760627e-002, -3.654547e-002, -5.047604e-002, -2.925513e-002, -5.952463e-002, 2.048230e-002, -1.423087e-002, -1.311312e-002, -6.913004e-003, -2.987472e-002, -2.989540e-002, -4.674747e-002, -4.364914e-002, -4.148152e-002, -3.519665e-002, 4.504352e-002, 1.603590e-002, 3.014719e-002, -3.045941e-002, -1.370936e-002, 1.765286e-002, 2.475757e-002, 1.053678e-002, 5.381920e-002, -6.488398e-002, 1.767394e-003, -4.963833e-003, 2.511800e-003, -2.680603e-002, -2.605574e-002, -2.496674e-002, -3.161681e-004, -1.712055e-002, -1.934532e-002, -2.357798e-002, 6.410301e-003, 3.498743e-002, 2.358536e-002, -4.406553e-002, 1.199257e-002, -1.396005e-002, 1.171309e-002, 3.924953e-002, 4.988666e-002, 4.367616e-002, 4.814087e-002, 8.475539e-003, 2.132809e-003, -9.419522e-004, -3.009782e-002, -1.545462e-002, -1.905109e-002, -1.643551e-002, -1.694338e-002, 3.848471e-003, -1.027840e-002, -7.449136e-003, -4.284546e-003, 5.185040e-003, 2.787234e-002, 3.794188e-002, -1.577992e-002, 4.563286e-003, -1.838059e-002, -6.200948e-003, -4.786946e-002, 6.840357e-002, 5.022291e-002, 1.283589e-003, -1.266799e-002, -1.964250e-002, -2.595232e-002, -1.178811e-002, -1.491860e-002, 2.090527e-004, -7.910009e-003, -1.044229e-002, -1.310552e-002, 8.081902e-003, 4.331694e-002, 1.920425e-002, 5.902534e-002, 3.010431e-002, 1.567479e-003, -5.897389e-002, -1.004773e-002, 1.061198e-002, 2.474472e-002, 4.992371e-002, 4.197021e-002, 1.077333e-002, 4.524818e-003, -1.676028e-002, -1.230880e-002, -1.407278e-002, 5.953540e-003, -8.794611e-003, -6.680721e-003, 2.972043e-003, -3.092937e-003, -1.402568e-002, 1.921240e-002, 1.166391e-002, 1.787852e-002, 6.735105e-002, 1.332553e-002, 5.234271e-002, -7.217485e-003, 1.200900e-002, 4.227416e-002, 1.355739e-003, 5.212064e-003, -3.379898e-002, -3.379898e-002, 5.212064e-003, 1.355739e-003, 4.227416e-002, 1.200900e-002, 2.276168e-002, 2.543871e-002, 3.724547e-002, -9.222621e-002, -6.447599e-002, -3.226090e-002, 1.806581e-002, -7.677514e-003, -5.510184e-002,


© ISO/IEC 2004 — All rights reserved

Copyright International Organization for Standardization
Provided by IHS under license with ISO
No reproduction or networking permitted without license from IHS
Not for Resale

6.620607e-002, 1.202759e-001, -8.763234e-003, -6.840689e-002, -4.830884e-002, -2.837026e-003, 3.009172e-004, 1.251825e-004, 4.550239e-003, 1.780658e-002, 2.764303e-002, 6.442352e-002, -3.025301e-002, -1.948580e-002, 6.560621e-002, -4.695633e-002, 7.014687e-002, 2.616808e-002, 1.504729e-002, -2.090408e-003, 8.486304e-003, 1.033010e-002, 9.827739e-003, 8.269129e-004, -4.327744e-002, -5.532507e-002, 1.061709e-002, 4.736790e-002, 4.197672e-002, 1.072713e-002, 7.052867e-003, 2.554626e-004, -3.206949e-003, -2.664766e-002, 8.107509e-002, 1.064199e-002, 1.396888e-002, 1.459408e-002, 1.770635e-002, 2.380675e-002, 4.675606e-003, 8.622462e-003, 1.036378e-002, 7.360936e-003, 1.044491e-002, -1.287809e-004, -4.104519e-002, -5.925661e-003, 3.842983e-002, 1.051136e-002, -5.919535e-004, 8.470009e-003, 7.009073e-003, 7.076878e-003, 1.570040e-002, 6.710340e-003, -3.303055e-002, 1.596139e-002, -1.260575e-002, 7.687564e-002, -1.387599e-002, 1.972730e-002, -8.785164e-003, -8.785164e-003, 1.972730e-002, -1.387599e-002, 7.687564e-002, -1.260575e-002, 1.577211e-002, -6.969377e-002, 1.073430e-001, -4.892271e-003, -2.828104e-002, 1.865042e-002, 4.799597e-003, 2.467466e-002, -2.527663e-002, 4.677490e-002, 4.447747e-002, 4.744793e-002, -9.228622e-002, 1.063617e-001, 6.672631e-002, 4.471155e-003, 6.862235e-003, 1.074770e-002, -4.111170e-002, -3.850113e-002, -1.360949e-001, -1.768522e-002, -7.928664e-002, -1.543250e-002, -1.857400e-002, 9.446082e-003, 7.547166e-003, -2.897839e-003, -3.793026e-003, 2.835412e-002, 3.472902e-002, -1.411462e-001, -2.638110e-002, -7.972688e-002, 6.996843e-002, -3.066841e-002, -1.265410e-003, 5.076256e-003, 1.092486e-002, 6.950180e-003, -7.053570e-003, -7.412211e-003, -2.944696e-002, -7.119539e-002, 9.678401e-003, -6.957419e-004, 2.803359e-003, -2.970453e-003, -1.893114e-004, -1.347201e-003, -6.098705e-003, -1.408952e-002, 1.393197e-002, 2.162733e-002, 7.848539e-003, -6.167305e-002, -5.759104e-002, 5.325554e-003, 1.847746e-003, -3.897606e-003, -2.535262e-003, -4.617239e-003, 5.160517e-004, 9.091282e-003, 4.835813e-002, -2.242777e-003, 7.100174e-003, 1.079450e-002, 3.770069e-002, -5.159483e-003, -2.138610e-003, -2.959532e-002, -2.959532e-002, -2.138610e-003, -5.159483e-003, 3.770069e-002, 1.079450e-002, 1.592310e-002, 4.642004e-002, -2.634830e-003, 2.051153e-002, 2.870652e-002, 2.541117e-002, -4.404316e-002, -2.948233e-002, 1.069345e-001, -4.797108e-002, 5.486734e-002, -4.311382e-002, -3.596634e-002, 2.479933e-002, 5.926417e-002, 1.234518e-002, 9.109003e-003, 1.417378e-004, 2.557119e-002, -1.969334e-002, -5.773155e-003, 2.312467e-002, -6.826007e-002, -9.058217e-003, -9.687563e-002, -2.725680e-002, 7.013345e-003, -2.468808e-003, -1.630521e-002, -3.849378e-002, -6.088193e-002, -1.042506e-001, 5.396154e-002, 6.123910e-002, -2.862945e-002, -6.036697e-002, -1.834069e-002, 1.132099e-002, -5.260031e-003, -8.480895e-003, -2.933683e-002, -2.890957e-002, -1.501459e-002, -1.006094e-002, 6.999554e-002, 1.163391e-002, -2.564385e-002, -3.704977e-002, -1.471148e-002, -1.100273e-002, -1.378752e-002, -1.198177e-002, -2.612661e-002, -4.832171e-003, -1.022313e-002, -3.136021e-002, 1.144677e-002, -8.677986e-003, -3.172399e-002, -1.947745e-002, -1.203659e-002, -6.080375e-003, -1.464239e-002, -9.478881e-003, -1.792704e-002, -1.237792e-002, -1.659411e-002, 1.633626e-002, 1.442721e-002, 9.423728e-003, 2.821267e-002, -1.007778e-002, -1.007778e-002, 2.821267e-002, 9.423728e-003, 1.442721e-002, 1.633626e-002, -8.520882e-002, 2.433753e-002, 6.925356e-002, -1.805532e-002, 3.904158e-003, 1.848137e-002, 1.089170e-002, 4.031219e-002, 9.575476e-002, -3.305288e-003, 8.044066e-002, -3.868463e-002, 7.315880e-004, -2.476798e-002, -1.068062e-002, -5.877511e-003, 1.162863e-002, 2.602033e-002, 4.804849e-002, 6.605960e-002, 6.532110e-002, -7.825183e-002, 4.067880e-002, 2.972856e-002, -7.502630e-002, -3.641269e-002, -2.607270e-002, -2.637059e-002, 1.434910e-002, 5.182354e-003, -2.799826e-003, -3.094428e-002, 8.660166e-002, 2.427062e-002, 1.053386e-002, -1.877231e-003, -6.841909e-003, -1.965542e-002, -1.615086e-002, 4.517118e-003, 7.854465e-004, -5.253484e-003, -1.919161e-002, -2.604047e-003, 5.497991e-002, 9.822697e-003, 1.582561e-003, -2.926662e-002, -1.773522e-002, -1.273848e-002, 5.556040e-003, -1.037680e-002, -8.689005e-003, 6.350266e-003, -1.515357e-002, 6.489482e-003, -2.078218e-002, -2.147769e-003, 1.192731e-003, -1.176892e-002, -1.495015e-002, -8.350542e-003, -1.396371e-002, 2.262637e-003, -4.184396e-004, 2.260947e-002, 3.257277e-002, -7.055907e-002, 1.499512e-003, 1.499512e-003, -7.055907e-002, 1.371436e-001, 8.915344e-002, 1.286055e-002, 1.320203e-002, 4.610206e-002, 3.163270e-002, -3.862996e-003, 1.708424e-002, 2.927499e-003, 1.422098e-002, -8.919006e-003, 1.298961e-002, 1.002168e-002, 1.002168e-002, 1.298961e-002, -4.717732e-003, -4.307433e-002, -3.603813e-003, 7.078807e-004, -8.467438e-003, -4.559657e-002, -1.868511e-003, 7.570115e-003, 2.410636e-003, 1.209222e-002, 4.091175e-002, -7.054360e-002, -2.260989e-002, -2.260989e-002, -7.054360e-002, 9.430469e-002, -1.787098e-002, -8.780177e-003, -1.416487e-002, -6.786970e-002, -3.821278e-002, -1.222342e-003, 1.410859e-003, -5.374147e-003, -3.202779e-002, -3.561818e-002, -3.768399e-002, -7.717315e-003, -7.717315e-003, -3.768399e-002, 1.055325e-001, 4.283911e-002, 1.862457e-002, 2.672269e-002, 7.841828e-002, 9.129461e-003, 1.430595e-002, 2.723076e-003, 3.316001e-003, -3.930105e-003, -1.976420e-003, -9.142239e-002, -6.956702e-002, -6.956702e-002, -9.142239e-002, 2.475526e-002, 4.784647e-003, -1.348391e-002, -1.817990e-003, 4.688050e-003, 1.272697e-002, -1.034972e-002, 2.947434e-003, 5.164510e-003, 5.895288e-003, -2.889483e-002, 6.641604e-003, 7.987594e-003, 7.987594e-003, 6.641604e-003, -8.437651e-002, 1.385564e-003, -1.563813e-004, -4.477349e-003, 4.416645e-004, 5.051810e-002, 1.010846e-002, 1.435038e-002, -1.128973e-003, 1.816283e-003, -6.024453e-002, 6.500201e-002, -1.464477e-002, -1.464477e-002, 6.500201e-002, -8.017658e-002,

© ISO/IEC 2004 — All rights reserved


Copyright International Organization for Standardization
Provided by IHS under license with ISO
No reproduction or networking permitted without license from IHS
Not for Resale

2.512562e-002, -4.002821e-003, -1.058519e-002, 1.336214e-002, 3.201423e-002, -4.964231e-003, -4.481060e-004, 2.778889e-003, -3.822632e-003, 7.091235e-002, -5.300523e-002, -4.343861e-002, -4.343861e-002, -5.300523e-002, -1.023747e-001, 1.122602e-002, 2.509288e-003, -2.527085e-002, -4.812062e-002, -3.671215e-002, -3.147772e-003, 5.934228e-003, 4.257733e-003, -7.716715e-003, -2.809838e-002, -2.208602e-003, -3.945491e-002, -3.945491e-002, -2.208602e-003, 1.247174e-002, 2.087472e-002, 9.453338e-003, 2.207041e-002, 1.918319e-002, 2.831113e-003, 4.159776e-003, 3.139781e-003, -6.876407e-003, -2.583907e-003, 2.787804e-002, -2.159258e-002, -7.706556e-004, -7.706556e-004, -2.159258e-002, -5.011634e-002, -1.350311e-002, -2.177310e-003, -8.244827e-003, -5.807741e-003, 1.097900e-002, -1.701151e-002, 2.838714e-003, 1.340364e-003, 8.515402e-003, 5.036159e-003, -3.514429e-002, -1.668598e-002, -1.668598e-002, -3.514429e-002, -4.307025e-002, 1.638559e-003, -8.265352e-005, 9.245847e-003, 1.481287e-002, 8.027780e-003, 4.686435e-003, -8.780505e-005, 3.718457e-003, -5.979103e-003, -1.533262e-002, -8.483044e-002, -1.457478e-002, -1.457478e-002, -8.483044e-002, 2.733167e-002, 8.514661e-002, 3.179201e-002, 1.915709e-002, 4.530909e-002, 9.747337e-003, 1.769309e-002, 2.980406e-003, 7.647958e-003, 1.186339e-002, -1.197840e-002, -6.382072e-002, -1.698235e-002, -1.698235e-002, -6.382072e-002, -1.750054e-002, -2.793760e-002, -7.718810e-003, 2.320021e-003, 4.081175e-002, 2.550753e-003, -4.022326e-002, -1.348545e-002, -1.251503e-002, -7.589584e-003, 1.929892e-002, -5.858837e-002, -1.234343e-002, -1.234343e-002, -5.858837e-002, 1.408261e-001, 1.451759e-002, 1.362762e-002, -9.903617e-003, -1.568377e-002, 4.917816e-002, 7.574708e-003, 7.147365e-003, -7.267765e-003, -1.407064e-002, -9.950530e-004, -2.708913e-002, 6.262723e-003, 6.262723e-003, -2.708913e-002, 1.403532e-001, -2.809695e-003, -3.049089e-003, 8.092629e-003, 7.500490e-003, 4.904033e-002, 2.671788e-003, 1.432595e-003, 7.520332e-003, 9.574247e-003, -5.302599e-003, -2.572034e-002, -1.963479e-002, -1.963479e-002, -2.572034e-002, -1.253291e-002, -1.860969e-002, -1.932087e-002, 2.076883e-002, 1.498622e-003, 5.428716e-003, -1.473207e-002, -2.075811e-002, -4.562031e-003, -9.751278e-003},
{1.665575e-004, 1.179710e-002, -1.864060e-003, 1.548662e-003, 1.151575e-002, 1.423900e-002, 1.909384e-002, -2.816015e-002, 2.583827e-002, 4.067509e-003, 4.311786e-003, -6.017811e-003, 4.311786e-003, 4.067509e-003, 2.583827e-002, -2.816015e-002, 1.909384e-002, 1.423900e-002, 1.151575e-002, 1.548662e-003, -1.864060e-003, 1.179710e-002, 9.489674e-005, 2.947592e-002, -6.485233e-004, 2.443688e-002, -4.216520e-003, 1.879067e-003, -2.679817e-002, 6.580480e-003, 1.918712e-002, 2.717338e-002, 7.341449e-002, 3.160055e-002, 3.984372e-002, 1.229619e-002, -9.081861e-003, -3.280628e-002, 3.225279e-002, -1.595379e-002, -2.294024e-002, -1.722184e-002, 3.433565e-002, 1.245310e-002, -3.288730e-003, -3.397851e-002, -1.124353e-002, -1.652687e-002, -2.008864e-002, 2.546398e-002, 3.602249e-002, 2.340132e-002, 5.136330e-003, 5.211695e-002, -2.864311e-002, 8.616862e-004, 1.318932e-002, 1.662599e-002, -2.805583e-002, 7.385873e-002, 3.481752e-002, 5.577437e-002, -1.753720e-002, 1.393649e-003, 4.753423e-004, 6.509546e-005, 1.905876e-002, 2.154990e-002, -1.116507e-002, 8.043546e-003, -2.842466e-002, 3.023774e-002, -1.839186e-003, 2.655144e-002, 2.004760e-002, 2.692325e-002, 2.446755e-002, -2.297637e-002, -3.261060e-002, 1.203400e-002, -1.396846e-002, -4.447909e-002, -1.055799e-002, -3.512479e-002, -4.633359e-002, 9.133334e-003, 1.624671e-002, 3.303840e-002, -1.959631e-002, 1.782766e-002, 4.291788e-002, 4.559644e-002, 3.709903e-002, 1.991414e-002, -5.438547e-002, -4.764710e-002, -3.781043e-003, -6.015425e-003, 2.389226e-002, 4.735789e-002, 1.212539e-002, -1.596129e-002, 2.357259e-002, -2.863988e-002, 2.725500e-002, -2.376696e-002, -3.872438e-003, 4.843193e-002, -3.932547e-003, -3.486603e-002, 2.529545e-002, 6.976276e-002, 8.549470e-003, -1.886867e-002, -5.105192e-002, -8.189956e-003, 8.872885e-003, -2.121808e-003, 3.035618e-002, 3.542264e-002, -3.763199e-003, -7.925326e-003, 4.577805e-002, 2.591339e-002, -1.765843e-002, -4.702259e-002, 2.024571e-002, -2.225350e-002, 2.942799e-004, -4.600911e-003, 2.777724e-002, 2.783615e-002, 2.973613e-002, 3.228896e-002, -3.326828e-002, -1.517721e-003, 4.670011e-002, 1.247541e-002, -7.648057e-003, 1.335545e-002, -1.469753e-002, 8.107398e-003, 7.757562e-003, 6.211219e-003, 3.172891e-003, 1.325142e-002, 4.163456e-003, -4.213791e-003, 6.832891e-003, 1.613340e-002, 4.925882e-002, -6.639027e-003, 8.443179e-003, 3.207458e-002, -1.234936e-002, -1.528883e-002, 2.360675e-002, 1.245812e-002, -2.824625e-002, -3.466134e-002, 2.349606e-003, -4.819573e-002, -6.757743e-004, 1.349077e-002, -9.837211e-003, -3.976823e-002, -2.629079e-002, -3.917465e-002, -2.397272e-002, -4.900586e-002, 8.241889e-002, -1.035620e-002, 4.268214e-002, -9.304810e-002, -5.290010e-002, -2.235867e-002, 8.689218e-003, 4.058953e-002, 5.162667e-002, 3.370533e-002, -4.539795e-002, -3.591848e-002, -5.475823e-002, 2.036535e-002, 1.997103e-002, 2.827102e-002, 1.298835e-002, -1.101699e-002, -3.619007e-002, -5.221687e-003, -2.510670e-002, -2.689573e-002, 1.392554e-002, -4.642106e-002, 6.271182e-002, -4.355461e-002, 1.297185e-002, 1.172187e-002, -7.309026e-002, 1.546034e-002, -3.707693e-002, 1.033828e-002, -3.107257e-002, -3.972070e-002, 2.066392e-002, -1.220627e-004, -1.313864e-003, 5.799704e-003, 9.584171e-003, -1.854004e-002, -5.776206e-003, -3.725118e-003, -4.344873e-003, 7.235248e-003, 4.887497e-002, -9.287357e-003, 2.770378e-002, 9.766586e-003, -2.831852e-002, 6.977152e-003, -3.760816e-003, 4.436132e-002, -4.911128e-002, 1.157389e-002, -3.162087e-002, -1.619385e-002, 3.198834e-002, 1.379382e-002, 1.852035e-003, -7.115175e-003, 4.771307e-003, -2.357810e-002, -1.842215e-002, -8.017073e-003, 1.975237e-003, 1.830425e-002, 3.206240e-002, 4.912438e-002, 3.966805e-002, -3.637825e-002,


© ISO/IEC 2004 — All rights reserved

Copyright International Organization for Standardization
Provided by IHS under license with ISO
No reproduction or networking permitted without license from IHS
Not for Resale

2.126766e-002, -2.056460e-002, -2.734533e-002, -5.283291e-002, -5.744295e-002, 3.248199e-002, -5.151279e-003, 2.801124e-003, -4.037885e-003, -2.727404e-002, -1.930089e-002, -6.310924e-003, -1.870212e-002, -1.500028e-002, -5.366893e-003, -3.383708e-005, -3.284993e-003, -1.901522e-002, -6.445354e-004, 4.107158e-002, 1.991068e-002, 4.115633e-002, 7.106038e-002, 2.424054e-002, -1.991799e-002, -5.908525e-002, 5.238742e-003, 1.907707e-002, 1.033807e-002, -2.296724e-003, -1.369007e-002, -4.868784e-002, -2.334979e-002, -1.964030e-002, -7.463842e-003, -1.637020e-002, 4.363952e-003, -2.604418e-003, -4.745052e-003, -1.276807e-002, 1.333911e-002, 3.708184e-002, -1.616057e-002, 1.787320e-002, 4.561635e-002, -6.068229e-002, 8.040115e-003, 4.179006e-004, -5.932721e-003, 9.107830e-002, -3.451783e-002, -3.322493e-003, -4.503492e-004, -2.818094e-002, -1.420407e-002, -1.080173e-002, -1.648928e-002, -1.742215e-002, -4.943825e-004, -7.079874e-003, 1.214131e-002, -7.867132e-003, 4.122439e-003, 1.739115e-002, 1.897105e-002, 5.042934e-002, 7.291647e-002, 1.146460e-002, 2.208494e-003, 2.727447e-002, -8.567207e-004, 4.872053e-003, 1.327230e-002, -4.048694e-002, -4.048694e-002, 1.327230e-002, 4.872053e-003, -8.567207e-004, 2.727447e-002, -9.406419e-003, -1.447294e-002, 1.062451e-001, -1.114116e-001, -4.786855e-002, -1.235094e-002, 1.500881e-002, 4.704050e-002, 1.126280e-001, 6.272342e-002, 4.799231e-003, 3.757748e-002, -8.773506e-002, -1.088406e-001, 2.448866e-002, 2.908632e-002, 2.319438e-002, -1.301966e-002, -1.524996e-002, -1.692871e-002, -9.706964e-002, -8.051045e-002, 2.723393e-002, -2.895905e-002, -1.694932e-001, -3.059142e-002, -2.268677e-002, 7.492766e-003, -1.430817e-002, -3.840423e-003, -2.988701e-003, 1.853499e-002, 5.248331e-002, 8.249015e-002, 4.702471e-002, -2.272410e-002, -1.907341e-002, 5.514861e-003, 4.203125e-003, -6.694173e-003, -1.468616e-003, 2.899867e-003, -4.515973e-003, 4.924978e-002, -6.191929e-002, -8.911515e-003, 5.502190e-003, 2.406290e-002, -6.719015e-005, -4.127171e-003, -3.107214e-003, 6.495045e-004, 1.559891e-002, 1.756136e-003, 1.854885e-002, -6.485721e-002, -2.546516e-002, -1.635340e-002, 7.402772e-004, -9.866143e-003, -6.042461e-003, -4.507513e-003, -2.783921e-003, 5.351550e-004, 5.628409e-003, 2.267702e-002, 1.147666e-002, 8.885897e-003, -4.858121e-002, 1.899035e-002, -2.687615e-002, 2.876619e-002, 2.876619e-002, -2.687615e-002, 1.899035e-002, -4.858121e-002, 8.885897e-003, -1.770216e-002, 2.347954e-002, -1.061597e-002, 3.319832e-002, 3.757197e-003, 2.202238e-003, -5.347121e-002, -3.373892e-002, 1.014965e-001, 6.680463e-002, -6.530141e-002, 1.190088e-001, -1.860025e-001, -5.631841e-002, 1.856578e-003, -1.069793e-002, -1.527873e-002, 9.751552e-003, 1.241207e-002, -1.569695e-002, -5.210538e-002, 3.701183e-002, 1.228031e-002, 7.443179e-002, -1.763777e-002, 1.856764e-003, 1.383413e-002, -6.298340e-003, 2.349780e-002, -6.150630e-004, -3.286236e-002, -8.111071e-002, -7.793805e-002, -5.274108e-002, 2.410414e-002, -1.207663e-002, -4.487026e-003, -1.902282e-003, 1.544135e-003, -5.800782e-003, -1.540267e-002, -5.239812e-003, 6.785705e-003, -6.775736e-002, -8.267666e-004, -5.823922e-003, 7.625646e-003, -4.950783e-003, -4.735862e-003, -1.730955e-003, -4.710979e-003, -6.090367e-004, 1.868255e-002, 2.516876e-002, 1.466510e-002, -3.815955e-002, -8.756270e-003, 2.833376e-003, 1.734253e-003, -6.464017e-003, -2.329472e-003, -6.783016e-003, -3.515922e-004, 7.854251e-003, 1.684527e-003, -6.742718e-003, -4.732734e-003, -2.114922e-003, 1.039351e-002, -1.485331e-002, -3.592967e-002, -2.681923e-002, -2.681923e-002, -3.592967e-002, -1.485331e-002, 1.039351e-002, -2.114922e-003, -3.635550e-002, -4.598180e-002, 3.265933e-002, 7.110627e-002, -7.403647e-003, 6.039828e-003, 4.954815e-002, 1.044478e-001, -9.850348e-003, -7.443260e-002, 1.634119e-002, -2.209190e-002, -1.107884e-001, -1.022646e-001, -1.029496e-002, 6.785693e-003, -1.658986e-002, 1.185407e-002, -4.734061e-002, -7.150528e-004, 6.163212e-002, -6.754213e-003, -1.005641e-001, -1.962817e-002, -9.215689e-002, -2.603337e-002, 1.201344e-002, -6.358988e-003, -1.848551e-002, -9.414370e-003, -2.712649e-003, 3.905917e-002, 4.508499e-002, 3.273585e-002, 1.516667e-002, -6.075525e-002, -2.586768e-002, -6.397943e-003, -4.785524e-003, -1.031767e-002, -3.593364e-004, -5.703538e-003, 4.627046e-003, 2.198647e-003, -2.113647e-003, -3.188164e-002, -1.754568e-002, -2.697923e-002, -6.528618e-003, -5.708984e-003, -4.771471e-003, 2.396087e-003, 2.610826e-004, 1.072408e-002, -6.380945e-003, -6.985736e-003, -1.161369e-002, -2.173748e-002, -1.709982e-002, -1.578358e-002, -8.877856e-003, 2.101179e-005, -9.967902e-004, 1.235164e-002, -5.455223e-003, 1.222145e-002, -8.785863e-003, -1.707890e-002, 6.052010e-002, -1.754901e-002, -2.914791e-002, -6.189620e-002, -6.189620e-002, -2.914791e-002, -1.754901e-002, 6.052010e-002, -1.707890e-002, -4.765558e-002, 8.184580e-002, -2.989161e-002, -1.306209e-001, 9.067812e-002, 6.677554e-002, -1.171738e-002, -1.008502e-002, -3.652122e-002, 4.809949e-002, -7.294448e-002, -6.441079e-002, -2.079504e-003, -2.577044e-002, -2.335614e-002, 2.472282e-002, 3.538644e-002, 1.096507e-002, 1.602868e-002, 5.315330e-002, -4.416205e-003, -4.354637e-002, -6.300321e-002, -6.032733e-002, 7.352325e-002, 2.127109e-002, 6.073133e-003, -8.847945e-004, -5.665241e-003, 8.705382e-003, 1.626916e-002, -4.573924e-002, -9.857064e-002, -9.286195e-002, -6.119150e-002, -8.914123e-003, 1.448143e-002, 2.242208e-002, 9.973421e-003, -1.089220e-002, -8.516878e-003, 2.045976e-003, -4.781202e-002, 3.338777e-003, -3.365118e-002, -2.835883e-002, -5.885620e-003, 7.503838e-003, -3.550787e-003, 5.906224e-003, -1.320104e-002, -1.329994e-002, -9.302893e-003, -2.145436e-002, -3.606411e-002, -3.646001e-002, -1.745886e-002, -6.522253e-003, 1.127048e-004, -5.800124e-003, 1.960748e-003, -6.756680e-003, -5.690475e-003, -3.048255e-003, -1.484790e-002, -1.470231e-002, 1.849916e-002, -4.018320e-002, 3.970031e-003, 3.970031e-003, -4.018320e-002, -1.079826e-002, 3.111046e-003, -1.635021e-002,

© ISO/IEC 2004 — All rights reserved


Copyright International Organization for Standardization
Provided by IHS under license with ISO
No reproduction or networking permitted without license from IHS
Not for Resale

3.483281e-003, -1.110090e-002, -5.007824e-003, -2.778920e-002, 2.838026e-003, 1.233478e-003, -2.733566e-003, 1.919452e-002, -8.110067e-002, -3.352278e-002, -3.352278e-002, -8.110067e-002, -5.177808e-002, -5.322746e-002, -1.693649e-002, -5.557542e-003, -2.081747e-002, -2.819138e-003, -2.484675e-002, -3.723931e-003, 2.278847e-003, 2.966355e-003, 2.533954e-002, 1.624267e-002, -3.438153e-004, -3.438153e-004, 1.624267e-002, -4.483345e-002, 8.221170e-003, 3.201891e-003, 5.438420e-003, -1.221083e-002, -8.134206e-002, -1.502501e-003, 3.002145e-003, 1.655268e-003, -1.080941e-002, -1.244898e-002, -4.190075e-002, -9.653940e-003, -9.653940e-003, -4.190075e-002, 4.785302e-002, -2.325425e-002, -8.218851e-003, -1.059887e-002, 2.297041e-002, 2.207160e-002, -1.893038e-003, -3.835613e-003, -1.061456e-002, 5.627216e-003, -7.174257e-002, -8.637573e-003, 1.288682e-002, 1.288682e-002, -8.637573e-003, 7.438175e-002, 3.344359e-002, -8.265375e-003, 1.153204e-003, 6.657376e-004, 3.082134e-002, 8.608975e-003, 1.089731e-004, -1.099634e-003, 1.072019e-003, 3.625738e-002, -3.275723e-002, -7.163831e-004, -7.163831e-004, -3.275723e-002, 3.375062e-002, -9.790937e-003, -1.062443e-002, -2.542111e-003, -3.057690e-002, 4.439607e-002, -4.108810e-004, 5.088367e-003, 7.042772e-004, 1.362104e-003, 1.476198e-002, -1.618431e-002, -1.457897e-002, -1.457897e-002, -1.618431e-002, 5.984233e-002, -2.043056e-002, -7.527387e-003, -8.309618e-003, -1.866195e-002, 8.754905e-003, -5.595540e-003, -7.156711e-004, -2.053285e-003, 3.485769e-004, -1.617588e-002, 7.555218e-002, 5.308975e-002, 5.308975e-002, 7.555218e-002, 3.279781e-002, 3.814777e-003, 3.849732e-003, -9.556313e-003, 3.778392e-003, -3.077504e-003, -7.520932e-003, 2.720591e-003, -8.533658e-003, 1.406107e-002, 4.740315e-002, -1.370518e-002, 9.765092e-002, 9.765092e-002, -1.370518e-002, 3.853346e-002, 2.500495e-003, 8.684284e-003, -5.763244e-003, 2.043758e-002, 6.245504e-003, 3.399702e-003, -8.005753e-004, -5.167255e-003, 7.564251e-004, -6.327096e-002, 4.627977e-003, -2.036565e-002, -2.036565e-002, 4.627977e-003, 1.752887e-002, 1.107301e-002, -1.035279e-003, -8.392810e-003, -9.330152e-003, 3.805538e-003, -2.438969e-002, -2.712654e-003, -2.983029e-003, -1.642605e-004, 7.350573e-003, -2.732310e-002, -3.699929e-002, -3.699929e-002, -2.732310e-002, -2.995611e-003, -1.780001e-002, 7.298800e-003, -8.146555e-003, 1.232489e-002, -1.395368e-002, -2.982585e-003, -4.027652e-003, -7.205926e-003, -2.485446e-002, 1.451232e-002, -1.977741e-002, 5.880315e-002, 5.880315e-002, -1.977741e-002, -2.677450e-002, -7.614970e-003, 6.390708e-003, 3.024853e-003, -8.896793e-003, -1.710780e-002, -6.146099e-003, 5.647399e-003, -2.294144e-003, -7.014720e-003, -1.889114e-002, 2.831338e-002, -7.483062e-002, -7.483062e-002, 2.831338e-002, 4.612441e-002, -2.529862e-003, 1.504107e-003, 2.729333e-002, 5.739569e-002, 5.528444e-002, -1.059986e-002, -3.090715e-003, 7.310379e-003, 1.144320e-002, 3.002620e-002, -1.097066e-001, -4.953238e-002, -4.953238e-002, -1.097066e-001, 4.161328e-002, -2.551567e-002, 1.618577e-003, -1.056941e-002, -3.235653e-002, 8.000596e-003, -1.002574e-002, -2.279298e-003, 2.858540e-003, 1.055980e-002, -6.391280e-003, -9.445334e-002, -3.569469e-002, -3.569469e-002, -9.445334e-002, 2.612446e-002, 7.191572e-003, -1.821181e-003, 3.762959e-004, -8.154395e-003, -2.791148e-002, 9.725786e-003, 4.566383e-003, -3.932358e-004, -1.059859e-002, -2.425748e-002, -4.677059e-002, -4.450255e-002, -4.450255e-002, -4.677059e-002, 1.522889e-001, 4.826628e-002, 1.412079e-002, 2.664129e-002, 5.151331e-002, 3.949043e-002, 2.073593e-002, 8.315512e-003, 5.808242e-003, 1.145770e-002},
{-2.362323e-003, 4.886264e-003, -3.359410e-006, 1.006959e-003, 2.051353e-003, -9.915860e-003, -1.518116e-002, 1.265849e-002, -7.290963e-003, -1.132649e-002, 2.544051e-002, -1.730135e-002, 2.544051e-002, -1.132649e-002, -7.290963e-003, 1.265849e-002, -1.518116e-002, -9.915860e-003, 2.051353e-003, 1.006959e-003, -3.359410e-006, 4.886264e-003, 3.299853e-002, -7.294193e-003, 1.977296e-003, -1.212757e-002, -1.652889e-002, 1.485378e-002, 4.718849e-003, 2.573292e-002, 5.165225e-002, -2.654945e-002, 5.269925e-002, 1.585343e-002, -8.993234e-003, 2.219474e-002, 1.076638e-002, 2.162426e-002, -1.880447e-002, -1.117004e-002, 5.277511e-003, -2.797030e-002, -1.280751e-002, -1.466991e-002, 3.080508e-002, 1.009281e-002, 1.990915e-003, -7.835012e-003, -3.207239e-002, 1.575429e-003, 1.050473e-003, -4.930465e-002, -5.370343e-002, -3.749140e-002, 4.315259e-003, -6.769548e-002, -2.222293e-002, -2.699898e-002, -6.154714e-002, 9.156202e-003, -5.863137e-003, 6.592983e-003, 1.149737e-002, -2.265142e-003, 1.557297e-002, 2.964286e-002, 2.368352e-002, 4.489913e-002, 4.339896e-002, 1.374491e-002, 2.214845e-002, 1.129722e-002, -3.457246e-003, -4.837848e-002, -6.105662e-002, -1.233538e-003, -2.729924e-002, -1.971830e-002, -1.067682e-002, -4.611158e-002, 3.740295e-002, -9.044657e-002, -1.609940e-002, -5.657526e-002, -1.964573e-002, 2.933022e-002, 1.784491e-002, 1.389648e-002, -8.193437e-002, 3.765604e-002, 7.079185e-002, 3.450696e-002, 7.674199e-002, 4.571447e-002, -4.135743e-002, -2.761398e-002, -6.019587e-002, 5.646810e-003, 1.073347e-001, 1.166785e-002, 2.193232e-002, 9.170916e-004, -2.545492e-002, -6.596670e-002, -9.457423e-003, -8.339867e-005, -9.334574e-003, 5.341588e-002, 7.436962e-002, 4.802906e-002, 4.344592e-002, -3.924634e-002, 7.880913e-002, -1.677937e-002, 4.884812e-002, -1.164915e-002, 4.346031e-002, 6.643627e-002, 2.359834e-002, 8.400726e-002, 3.307154e-002, -5.802232e-002, -6.511304e-002, -9.652111e-002, -7.249234e-002, -2.573443e-002, 4.924602e-002, 4.381111e-002, 2.134725e-002, -5.480150e-002, 2.804007e-002, -6.460002e-003, 3.786719e-002, 1.931701e-002, -6.553415e-002, -2.755545e-002, 6.941947e-002, 2.953109e-002, 1.006210e-001, 1.306662e-002, -2.085435e-002, 1.840284e-003, 1.527721e-002, 2.931638e-002, 7.196636e-002, 1.091699e-001, -1.955945e-002, 1.146262e-002, 7.983259e-002, -2.970622e-003, -7.298529e-002, 2.117726e-002,


© ISO/IEC 2004 — All rights reserved

Copyright International Organization for Standardization
Provided by IHS under license with ISO
No reproduction or networking permitted without license from IHS
Not for Resale

7.873726e-004, -5.603836e-003, -6.951233e-002, 1.939351e-002, -7.074816e-002, -6.767289e-002, 5.762617e-003, -4.289155e-002, -5.435370e-002, -1.113426e-001, 3.283222e-002, 6.387543e-002, 3.069359e-002, 1.362419e-002, 3.000702e-003, -2.435964e-002, -4.396101e-002, -1.885080e-002, -2.156878e-002, -4.400742e-002, -4.131010e-003, -1.518880e-002, -3.757944e-002, 2.981171e-002, 6.597058e-002, -2.940076e-002, -9.436768e-003, -1.626921e-002, -5.923377e-002, 1.598676e-001, -4.472158e-002, 6.175264e-002, 1.769469e-002, 3.121827e-002, 1.758684e-002, -1.280080e-002, 5.028650e-003, 1.736098e-002, -5.652018e-002, -5.560415e-002, 3.158021e-002, -1.212156e-001, 5.509401e-003, 7.899326e-002, 2.630666e-002, -1.939941e-002, 2.123460e-002, -1.963812e-002, 6.316571e-002, -3.654784e-002, -1.885991e-002, 6.500273e-002, 3.595939e-002, 2.615634e-002, 1.609468e-002, 3.049626e-002, 2.504074e-002, -1.806712e-002, -4.503380e-003, 2.646397e-003, 2.978791e-002, 1.913649e-002, 2.243767e-002, -3.646895e-003, -8.144110e-002, 3.689076e-002, 1.052018e-001, -2.154514e-002, -5.163567e-002, 4.056334e-002, 1.661375e-002, -1.107364e-002, 2.074944e-003, 4.186177e-002, 1.403720e-002, -1.214068e-002, 2.181299e-003, 2.594418e-002, 3.701472e-002, 2.025146e-003, 2.890595e-003, 9.694802e-003, 1.305727e-002, 4.931054e-003, 4.049711e-002, 3.455780e-002, 3.051787e-002, 8.566699e-002, 5.084760e-002, -4.379247e-002, 6.450160e-002, 2.634245e-002, 7.492646e-002, -8.155623e-003, -3.025071e-002, 1.414694e-002, 8.215036e-003, -1.168956e-002, 5.153153e-003, 1.618046e-002, 2.015078e-002, 4.589912e-003, -3.302725e-003, -7.873784e-004, 2.498560e-003, 1.682224e-002, 2.171088e-002, -6.237755e-004, 8.179678e-003, 4.278888e-002, 2.529593e-002, -9.022295e-002, 4.263452e-002, -3.541827e-002, 5.196867e-002, -3.500128e-002, -2.151960e-002, 3.715530e-003, 1.607183e-002, -3.366902e-004, 4.555127e-003, 6.464241e-003, 9.698674e-003, 4.946058e-003, 3.880926e-003, -2.017288e-002, -9.909306e-003, -4.793182e-003, 6.073725e-003, 3.159003e-002, -1.328489e-002, -2.071420e-002, 5.936236e-003, -5.195101e-002, 6.223925e-002, -3.603332e-002, -1.635413e-002, 5.197036e-003, -1.274923e-002, 2.886611e-002, 1.509154e-002, -7.546976e-003, -1.592786e-002, -3.849257e-003, 2.290632e-003, -3.705535e-003, -7.398973e-003, -1.449985e-002, -1.101620e-002, 3.903895e-003, 9.082599e-003, 7.797975e-003, -6.131841e-003, 3.033070e-002, 3.076595e-002, -1.708930e-002, 1.930068e-002, -4.389732e-003, -4.920528e-002, -1.742622e-002, -1.107672e-002, 4.572324e-003, 4.572324e-003, -1.107672e-002, -1.742622e-002, -4.920528e-002, -4.389732e-003, -9.875284e-002, -4.075668e-002, 1.077836e-002, -3.030763e-002, 7.206824e-002, 4.319234e-002, -1.977514e-002, -4.945202e-002, -6.136332e-002, 5.867292e-002, 3.631506e-002, -6.565797e-002, -9.406056e-002, -1.111109e-001, 7.275563e-002, 9.563918e-003, 1.827093e-002, -2.137514e-002, -2.328132e-002, -1.851676e-002, -4.757114e-002, 2.402037e-002, -1.258457e-002, -1.026582e-001, -2.231514e-002, 7.251120e-002, 3.322820e-002, 3.445395e-002, 3.580149e-003, -4.679789e-003, 6.236362e-003, -1.829830e-002, -2.476843e-002, 2.420787e-002, -3.124898e-002, 1.351007e-002, 1.283187e-002, 3.579783e-002, 3.362074e-002, 4.944341e-003, 8.541747e-003, 1.654952e-002, 5.259373e-003, -5.822265e-002, -5.740544e-003, -1.275271e-002, 1.329537e-002, 7.587820e-003, 4.594530e-003, 2.212761e-002, 5.897638e-003, 6.114060e-003, 1.369675e-002, 3.418979e-003, -5.896483e-004, 1.285302e-002, -2.785696e-002, 3.473162e-003, -7.500313e-003, 6.114013e-003, 1.222348e-002, -1.006632e-003, 2.723304e-003, 4.418807e-003, 4.859808e-003, -1.546187e-002, -1.791051e-003, 8.056960e-003, -1.378956e-002, 9.397121e-003, -1.158539e-002, 1.235117e-002, 1.235117e-002, -1.158539e-002, 9.397121e-003, -1.378956e-002, 8.056960e-003, -5.931504e-002, -9.942058e-002, 5.256669e-003, -9.592172e-003, -7.959916e-003, -9.682756e-003, 2.199065e-003, 2.446350e-002, -9.571948e-002, -6.910037e-002, -3.274823e-002, -4.441134e-002, 3.795422e-002, -5.154635e-002, -4.365261e-002, -1.734148e-002, -1.411699e-002, -1.726201e-002, -2.864141e-002, 3.481478e-003, -3.814430e-002, -3.375866e-002, -8.629296e-002, 3.231937e-002, 4.252361e-002, 1.734373e-002, 7.665892e-003, 2.925773e-003, 2.197997e-002, 2.283842e-002, 1.951151e-002, 2.772902e-002, 4.146450e-002, 1.501750e-003, -4.446054e-002, 2.289771e-002, 1.547476e-002, 2.099180e-003, 8.585005e-004, 2.637661e-003, 2.865935e-003, -6.210497e-003, 3.434710e-002, 4.433406e-002, -5.800205e-002, -1.409321e-003, 6.455332e-004, 1.638020e-002, 1.322477e-003, 2.649305e-003, 7.451082e-003, 1.991762e-002, 3.674891e-002, 4.137274e-002, -2.777726e-003, -8.551181e-003, 2.449420e-002, 1.026018e-002, 8.463894e-003, 5.132346e-003, 5.121755e-003, 8.361402e-003, 2.061414e-003, 1.333175e-002, 1.521162e-002, -1.885056e-002, -2.708880e-002, -2.292272e-003, 1.977016e-002, 2.549498e-002, 7.555580e-003, 1.769973e-002, 1.769973e-002, 7.555580e-003, 2.549498e-002, 1.977016e-002, -2.292272e-003, -9.101889e-002, -9.754728e-002, 5.396268e-002, 4.295457e-002, 3.735741e-003, 3.262421e-003, -4.377563e-002, -6.222055e-002, -1.091606e-002, 1.291767e-001, 6.002520e-003, -1.126514e-002, 5.004356e-002, -1.068607e-001, -2.380960e-002, 1.521093e-002, 4.472420e-003, -1.031190e-002, -1.031400e-002, -1.930757e-002, -1.014290e-001, 2.946479e-002, 2.139895e-002, 7.615977e-002, 3.724598e-002, -2.197058e-004, 1.503738e-002, 7.149556e-003, 3.906993e-003, -1.189118e-002, -7.049398e-003, 7.636651e-003, -2.481364e-002, -4.049821e-002, 3.826157e-002, 3.117183e-002, 1.284474e-002, 8.587111e-003, 8.791602e-003, -8.971824e-003, -2.470181e-002, -1.961037e-002, -1.741048e-002, 4.559587e-002, -7.018547e-002, 2.904282e-002, 1.118832e-002, 6.508120e-003, 9.287969e-003, 7.850202e-003, -4.312029e-003, 1.219020e-003, -1.096037e-002, -2.944142e-003, -1.210422e-003, -1.230453e-003, 1.853847e-002, 1.059212e-002, -2.177457e-003, 7.762978e-004, 1.152418e-002, 3.437439e-003, -5.370538e-005, -

© ISO/IEC 2004 — All rights reserved


Copyright International Organization for Standardization
Provided by IHS under license with ISO
No reproduction or networking permitted without license from IHS
Not for Resale

1.402842e-002, -8.641814e-003, 4.456384e-004, 7.216849e-003, 5.601963e-003, 3.934494e-002, -1.363285e-002, 2.249842e-002, 1.261505e-002, 1.261505e-002, 2.249842e-002, -1.363285e-002, 3.934494e-002, 5.601963e-003, -4.705693e-002, 2.201831e-002, 1.300519e-002, 3.979136e-002, -6.424438e-002, -4.393529e-002, 1.462314e-002, 6.163108e-002, 4.508784e-002, 8.505785e-002, 1.770223e-002, 5.043327e-002, -4.549522e-002, 1.311597e-003, -1.162522e-002, -3.051257e-002, 2.736714e-003, 2.917886e-002, 7.590757e-003, 1.764919e-002, -6.610858e-002, -1.100678e-001, 3.604005e-002, -4.416040e-002, -6.841983e-003, -3.911063e-002, -3.362495e-003, 6.188668e-003, 8.613565e-003, -7.416144e-003, 8.572641e-003, -1.591554e-002, 6.701310e-002, 2.219262e-002, 1.717581e-002, 1.628908e-002, -7.011057e-003, -1.265642e-002, -2.170447e-003, 6.488105e-003, -9.985751e-003, -1.604094e-002, -3.271462e-002, -1.628640e-002, -6.052086e-002, -6.871020e-003, -2.504914e-002, -1.135995e-002, -6.464814e-003, -1.307195e-003, 1.081235e-003, -9.752966e-003, -4.517055e-003, 4.311791e-004, 2.824571e-002, -5.479074e-004, -1.619563e-002, -1.672424e-002, -2.898292e-003, -7.877006e-003, 2.882655e-003, -4.121188e-003, -8.469427e-003, -9.939673e-003, 4.088321e-003, -4.402540e-004, 8.578208e-003, 5.193366e-002, 7.092270e-002, 7.092270e-002, 5.193366e-002, -9.047579e-002, -6.989796e-002, 4.049705e-002, -7.969228e-003, -2.798700e-002, -2.053130e-002, -5.381637e-003, 2.122410e-002, 7.516950e-004, -5.271102e-004, -1.151772e-001, 3.143964e-004, 9.201586e-005, 9.201586e-005, 3.143964e-004, 6.059331e-002, 9.008930e-004, 6.739755e-003, 7.247336e-004, 1.667323e-003, 4.630040e-002, 1.911958e-003, 7.255752e-003, 7.487525e-004, -7.493017e-004, 4.505956e-002, -8.486776e-003, -8.965117e-003, -8.965117e-003, -8.486776e-003, -5.392364e-002, 1.904065e-002, 5.445433e-003, 2.306493e-003, 2.156446e-002, 3.245869e-002, 5.784291e-003, 3.035372e-003, 2.113610e-004, 1.424957e-002, 1.427392e-002, 9.229938e-003, 1.190634e-002, 1.190634e-002, 9.229938e-003, 8.104034e-002, -1.951735e-002, -9.557919e-003, 9.530624e-004, -1.877740e-002, 3.587722e-002, -9.252299e-003, -9.876140e-004, 1.111767e-002, 2.592609e-003, 2.374055e-002, 4.749767e-002, 1.372210e-002, 1.372210e-002, 4.749767e-002, 8.776239e-002, 3.472344e-002, 8.874556e-003, -3.710924e-003, -1.057521e-002, 2.458645e-002, 6.633462e-003, 1.775460e-002, 2.416597e-003, -3.334582e-003, 1.021591e-001, 4.091118e-002, 1.388886e-002, 1.388886e-002, 4.091118e-002, 3.871730e-002, 1.418581e-002, 1.286666e-002, -6.498233e-003, -1.255246e-002, -9.616511e-003, -7.507764e-003, 5.014671e-003, 6.112635e-003, 4.467236e-003, -6.449308e-004, 4.560819e-002, -4.246733e-003, -4.246733e-003, 4.560819e-002, 7.079107e-002, -2.826982e-002, 3.590237e-003, 4.301000e-003, 7.489315e-003, 2.496177e-003, 2.130785e-002, 6.119531e-003, 3.345445e-005, -9.321156e-005, -6.047960e-002, 2.054541e-003, 1.155710e-002, 1.155710e-002, 2.054541e-003, 7.737606e-002, -3.820812e-002, -1.608398e-002, -1.555464e-002, -2.034378e-002, 2.119117e-002, -5.897420e-003, -1.128480e-002, 9.175775e-004, -4.622016e-003, 1.172819e-002, -2.353947e-002, 2.736603e-003, 2.736603e-003, -2.353947e-002, -3.102402e-002, 3.537508e-003, 9.632911e-003, -1.528984e-002, -3.373657e-003, -4.682812e-003, 6.097646e-004, 6.072781e-003, -6.500335e-003, -1.660471e-005, -5.167465e-002, -1.561849e-002, 2.924524e-003, 2.924524e-003, -1.561849e-002, -4.309727e-003, 3.843925e-003, 9.287991e-003, -2.550541e-003, 1.911810e-002, 5.155566e-002, 2.799587e-002, 9.854881e-003, 2.679534e-003, 1.886349e-002, 1.033850e-003, -5.176387e-002, -9.393535e-003, -9.393535e-003, -5.176387e-002, 6.670911e-003, 1.857159e-003, 3.578488e-003, 1.481238e-002, 6.163102e-003, 4.928867e-002, 8.368342e-003, 2.333199e-003, 4.515189e-003, 1.770059e-002, 4.679097e-002, -3.099787e-002, -2.628726e-003, -2.628726e-003, -3.099787e-002, 2.351568e-002, 1.412461e-002, -7.746342e-003, 1.546167e-002, 2.560597e-002, 5.425363e-003, 1.404766e-002, 4.147200e-003, 6.753905e-003, 1.183324e-002, -1.501485e-002, 1.880038e-002, -8.354973e-003, -8.354973e-003, 1.880038e-002, 5.274343e-002, -1.399086e-002, -1.239869e-002, -2.346686e-002, -4.167711e-002, -3.225261e-002, 1.008063e-002, -3.579120e-003, -1.244399e-002, -1.785269e-002, 2.787251e-002, -2.886730e-002, -2.116548e-002, -2.116548e-002, -2.886730e-002, -5.675591e-002, 2.080137e-002, 1.306587e-002, 5.114811e-003, 2.527048e-002, -2.920861e-002, 3.809062e-003, 2.102153e-003, -2.607883e-003, 2.467876e-003, -4.004231e-002, 8.217239e-004, -1.169620e-002, -1.169620e-002, 8.217239e-004, 2.327569e-002, 3.670573e-003, 7.599711e-003, 4.989293e-004, -3.560427e-003, -8.517977e-003, -1.166622e-002, -2.119243e-003, -1.434848e-003, 6.818698e-004, -5.656575e-004, -3.315452e-002, -3.662644e-002, -3.662644e-002, -3.315452e-002, -1.028495e-001, -4.362131e-002, -3.804982e-002, 7.798161e-003, -4.525846e-002, -5.786214e-002, -2.220633e-002, -4.097248e-003, -7.162490e-003, -4.140768e-002},
{-1.233351e-003, -4.974689e-003, 8.102096e-003, 5.820413e-003, -2.981622e-002, -1.983581e-002, -4.473134e-003, 3.981926e-003, -7.339924e-003, 4.286981e-004, 3.193509e-003, 2.396840e-002, 3.193509e-003, 4.286981e-004, -7.339924e-003, 3.981926e-003, -4.473134e-003, -1.983581e-002, -2.981622e-002, 5.820413e-003, 8.102096e-003, -4.974689e-003, 1.643031e-003, 1.411565e-002, -1.723875e-003, -2.742768e-002, -2.436937e-002, 2.471882e-003, 5.499589e-002, 1.161920e-002, 4.090953e-002, -9.232766e-002, 4.433170e-003, -7.475810e-003, 5.184647e-002, 5.701371e-003, -8.089140e-003, -2.313493e-002, -5.474508e-003, 1.529064e-002, -3.034535e-002, -1.772729e-003, 1.391990e-002, 5.448419e-003, -2.831051e-002, 2.809960e-002, -1.740727e-002, 1.066537e-002, 3.231089e-002, 2.350812e-002, 4.505867e-002, -2.799823e-002, 2.704654e-002, -3.799507e-002, -1.566123e-002, -8.100807e-002, -7.536660e-002, -2.310476e-002, -6.564727e-003, -2.432221e-003, 2.187952e-002, 1.835536e-002, -6.855520e-003, 4.012473e-002, -


© ISO/IEC 2004 — All rights reserved

Copyright International Organization for Standardization
Provided by IHS under license with ISO
No reproduction or networking permitted without license from IHS
Not for Resale

1.269303e-002, -7.852147e-003, -1.606795e-003, 1.013111e-002, 1.133838e-002, -2.932493e-002, 2.743086e-003, -3.911323e-003, 1.082296e-003, -7.115672e-003, -1.007439e-002, -6.090730e-002, 1.566195e-002, -1.630627e-003, 8.884589e-003, -4.496809e-002, -6.921558e-002, -4.181819e-003, 2.847420e-002, 6.326369e-003, 2.168519e-003, 1.964946e-002, 1.758632e-002, -2.057835e-002, 2.895359e-002, 3.712560e-002, 2.511644e-002, 2.867432e-002, -1.305327e-002, 7.748116e-003, -4.229922e-002, -3.897718e-002, -5.033549e-002, -3.143174e-002, -2.508203e-002, -2.335769e-002, -3.517757e-002, -4.047418e-002, -8.437634e-003, -7.970730e-003, 3.750823e-003, -2.918088e-002, -1.790010e-002, -4.214733e-002, 1.250341e-002, -1.517923e-002, -9.012819e-003, 1.687582e-002, -3.004275e-002, 3.186101e-002, 3.431092e-002, 4.832707e-003, -5.563699e-002, 1.819095e-002, -2.539729e-002, 1.357204e-002, 3.577316e-004, -2.348657e-002, 6.901837e-003, -3.645909e-002, -9.062666e-002, 1.721036e-002, -1.572402e-002, 5.330948e-002, -6.315721e-002, -2.794711e-002, -1.366749e-002, -2.124099e-002, -1.423854e-002, 4.420276e-002, -2.977410e-002, 2.270332e-002, -2.098793e-002, 3.469582e-002, -4.627375e-002, -2.093432e-002, -6.403131e-003, 7.077907e-002, 4.883734e-002, 4.654169e-002, 1.129731e-001, 9.012908e-002, -4.539234e-003, -5.018266e-002, -3.829389e-002, 2.737489e-002, 1.870288e-002, -5.830443e-002, -3.058532e-002, 6.782507e-003, 2.267319e-002, -3.790988e-002, -2.997517e-002, -5.801920e-002, -1.928074e-002, 2.949237e-002, 2.987478e-003, -1.067236e-001, 1.374283e-002, 3.716485e-002, 3.059333e-002, 2.159012e-002, 2.743195e-002, 3.943418e-002, 6.031457e-003, -1.099804e-002, -8.035091e-002, -4.609841e-002, -1.460720e-002, 5.212568e-004, -1.709787e-004, 1.886622e-002, -6.208801e-002, 6.482331e-002, -3.825606e-002, -6.839220e-002, -7.625586e-002, -1.712038e-002, -5.407445e-002, 1.098471e-002, 3.479041e-002, 1.355961e-002, 1.533403e-002, 3.950745e-002, 1.299894e-002, 2.869921e-002, -1.688357e-002, -3.350230e-002, 6.243459e-003, -8.447693e-002, 1.306284e-002, -3.626370e-002, -3.949390e-002, 2.968497e-003, 1.736405e-003, 5.974703e-002, -1.156921e-001, -1.020673e-002, -2.359822e-002, 5.373638e-003, 9.074176e-003, 1.965149e-002, 4.622547e-003, 5.542586e-002, 1.991925e-002, 1.465160e-002, -5.588002e-003, -3.565614e-002, -5.352068e-002, -5.936679e-002, -3.192706e-002, -1.624513e-002, 2.111058e-002, 1.609823e-002, 4.048755e-002, 2.293953e-002, -3.211539e-003, 1.341552e-003, 6.974893e-002, 7.081053e-003, -2.010201e-002, 5.012441e-002, 2.426451e-002, 1.002336e-002, 2.148527e-002, 5.273436e-002, 1.806820e-002, 3.315652e-002, 1.790036e-002, 8.994452e-003, 1.856033e-003, -1.188679e-002, 6.802013e-003, 8.321096e-003, 1.729087e-002, 1.164851e-001, 6.977300e-002, 5.111486e-002, 1.884635e-002, 2.870097e-002, 1.275601e-002, 1.934662e-002, -7.657931e-002, 2.306600e-003, 6.602286e-003, 3.864399e-002, 2.068644e-002, 3.025219e-002, 2.714000e-002, 5.412733e-003, -1.727103e-003, -5.131059e-003, 3.283543e-003, -1.494440e-002, 1.763551e-003, -1.292516e-002, 9.644694e-002, 1.376145e-002, 7.890201e-002, 3.310819e-002, -1.456135e-002, 3.206854e-002, 2.541928e-002, 1.591495e-002, -1.307535e-002, 2.025735e-002, 7.816043e-003, 8.497397e-003, 1.305867e-002, 1.846379e-002, 2.864919e-002, 4.934940e-003, -6.636908e-004, -8.876422e-003, -7.029364e-004, 8.555291e-003, 1.892586e-002, 1.465377e-002, 2.148565e-004, 4.434165e-002, -7.718175e-003, -2.014721e-002, 4.049021e-002, -1.089146e-001, -1.432197e-002, 4.047382e-002, -2.556145e-003, -1.177637e-003, -2.597149e-003, 1.611475e-002, 1.021238e-002, 1.097289e-002, 1.777480e-002, -8.245819e-003, -2.423963e-003, 6.768724e-003, -2.101207e-002, -1.053648e-002, -1.686780e-002, 1.475167e-002, -1.179354e-002, 1.771855e-002, 4.921055e-002, 5.226895e-002, -4.147487e-004, 4.785531e-003, 3.388644e-002, 8.327416e-003, 2.388292e-002, 2.037659e-002, 2.037659e-002, 2.388292e-002, 8.327416e-003, 3.388644e-002, 4.785531e-003, 4.785516e-002, -6.023989e-002, 7.895324e-002, 5.436601e-002, 1.461360e-002, -6.319223e-003, -2.301160e-003, 1.910296e-002, 1.879565e-003, -1.139273e-001, 6.320113e-003, -1.033497e-002, -8.278111e-002, -6.897983e-002, 1.925404e-002, -6.924743e-002, 1.449525e-003, -5.629881e-003, -5.352538e-003, 1.168110e-002, 7.431463e-002, 1.218064e-001, 4.277733e-002, -1.220521e-001, 8.696667e-002, -4.356859e-002, -4.350358e-002, -4.189798e-003, 6.788368e-003, 3.355412e-003, -4.348430e-004, 1.643647e-002, 5.196744e-002, -1.013638e-001, -3.328270e-002, 6.088206e-002, -2.874868e-002, -1.281824e-002, -6.944202e-003, 4.815447e-003, 4.516736e-003, -5.097772e-003, 7.242990e-004, 7.128036e-003, -4.456201e-002, 2.058000e-002, 2.601860e-002, 1.398688e-002, 2.125558e-002, 1.280835e-002, 1.290184e-003, 6.617125e-003, 8.519240e-003, -2.748919e-003, -3.810218e-002, -1.130875e-002, 4.512234e-002, -5.000682e-003, 1.350315e-002, 1.831097e-002, 1.978021e-002, -1.399764e-003, 1.120275e-003, -5.451626e-003, 3.101370e-003, 1.312250e-003, -1.021776e-002, -1.665033e-002, 6.371900e-003, -3.254684e-003, 1.737944e-002, 6.429346e-003, 6.429346e-003, 1.737944e-002, -3.254684e-003, 6.371900e-003, -1.665033e-002, -8.458154e-003, -2.470637e-002, 3.692439e-002, -3.378235e-002, 1.428254e-002, 1.671883e-002, 4.942016e-002, 1.114059e-001, 3.686993e-002, 1.049477e-001, 2.277592e-002, -2.414293e-002, -1.021345e-001, 2.238161e-002, -3.942649e-002, 2.241530e-003, -1.733050e-002, -4.860481e-002, -8.824798e-002, -2.721536e-002, -1.952914e-002, 2.518916e-002, 6.605547e-003, 5.065496e-002, -3.841162e-002, -7.215571e-004, 7.734859e-003, 5.413082e-003, 3.375248e-003, -6.358828e-002, -1.322403e-001, 1.367504e-002, -4.399025e-003, -5.301498e-002, 2.102290e-002, -3.686117e-002, -6.341311e-004, 7.933377e-003, 2.327131e-003, 8.200364e-003, -1.169877e-002, -6.568844e-002, -1.894653e-003, 2.864403e-003, -2.390353e-002, -5.783356e-002, -9.339863e-003, 9.111711e-003, 1.004330e-002, 5.499368e-003, -1.522411e-004, 3.464193e-003, -

© ISO/IEC 2004 — All rights reserved


Copyright International Organization for Standardization
Provided by IHS under license with ISO
No reproduction or networking permitted without license from IHS
Not for Resale

9.162603e-003, 1.966755e-002, 3.511203e-002, 8.763260e-003, 4.394099e-003, -5.280719e-003, 7.033945e-003, 1.661933e-002, 2.893651e-003, 7.628208e-004, 3.721302e-003, 8.607202e-003, -1.648246e-002, 2.850800e-002, 1.211394e-002, 3.825930e-003, -2.725693e-002, -5.210727e-003, 6.315457e-003, 4.819808e-002, 4.819808e-002, 6.315457e-003, -5.210727e-003, -2.725693e-002, 3.825930e-003, -3.227738e-002, -7.034757e-002, 1.782120e-003, 4.022874e-002, 3.819871e-002, 1.647804e-002, -4.977023e-002, -7.176798e-002, 1.143280e-001, 3.481330e-002, 2.191807e-002, 6.134036e-003, -9.991533e-002, -7.537355e-002, 3.747345e-002, 2.397222e-002, 1.235732e-002, -4.167416e-004, 1.083680e-002, -2.576982e-002, 4.199803e-002, 3.430282e-002, 2.350265e-002, -7.538037e-002, -3.975789e-003, -1.109506e-002, 2.289984e-002, 2.098749e-002, 3.232554e-002, 3.353915e-002, 6.870398e-002, 5.858124e-002, 1.298715e-002, 2.346779e-002, 8.670799e-002, -3.062879e-002, -2.485264e-002, -9.422437e-004, 2.335571e-002, 2.381742e-002, 1.689001e-002, 3.476818e-003, 1.447399e-002, 2.794908e-004, -1.343917e-002, 6.939184e-002, 5.886709e-003, -1.616003e-003, -3.889820e-003, 1.001384e-002, 3.300909e-002, 2.215841e-002, 2.269211e-002, 2.001527e-002, 2.017218e-002, -3.200964e-002, -1.392605e-002, 1.520605e-002, 3.845625e-003, -8.591613e-003, -5.447230e-003, 1.200006e-002, 1.170309e-002, 5.094848e-003, 6.763008e-003, 7.592167e-003, -2.714784e-003, -7.715864e-004, 1.782115e-003, 9.493040e-004, 2.351714e-002, 8.239893e-004, 8.239893e-004, 2.351714e-002, 9.493040e-004, 1.782115e-003, -7.715864e-004, -2.126334e-002, -1.597329e-002, -5.268195e-003, 6.330570e-002, -8.344246e-002, -5.165496e-002, 1.070765e-002, 3.753667e-002, 5.341416e-002, 5.742616e-002, -2.807128e-002, -2.494174e-003, -4.876442e-002, 5.031681e-002, -6.465889e-005, 4.684981e-002, 2.231165e-003, 3.772428e-002, 4.506342e-002, 9.538330e-003, -2.250048e-002, 6.123796e-002, -7.981657e-002, 6.934634e-002, -1.584901e-002, 3.381598e-002, 3.627115e-002, 3.718834e-002, 3.314546e-002, 1.246445e-002, 5.644440e-003, 1.470318e-002, -1.026941e-001, 5.253503e-002, -4.153674e-002, -1.313599e-002, 2.685743e-002, 2.422271e-002, 2.400411e-002, 1.371662e-002, -1.737957e-002, -2.822904e-002, -2.594373e-002, 9.167015e-002, -1.117404e-002, 8.824136e-004, 2.212212e-003, 2.223862e-002, 2.055364e-002, 2.475007e-002, -2.095373e-003, -1.127053e-002, -8.275671e-003, 2.905384e-002, 7.106536e-002, -2.492829e-002, 1.860181e-002, -1.694142e-003, 3.169946e-003, 7.901113e-003, 1.706223e-002, -2.359925e-003, -1.292384e-002, -1.036916e-002, 6.536219e-003, 3.778324e-002, 8.539520e-003, -3.053045e-002, 1.596727e-002, 1.596727e-002, -3.053045e-002, 5.616370e-002, -3.802810e-002, -3.209339e-002, 1.430343e-002, 4.708557e-002, 1.526513e-002, 3.183629e-002, -1.665219e-002, 6.492524e-003, 6.256859e-003, 3.162216e-002, 8.756783e-002, 3.074364e-002, 3.074364e-002, 8.756783e-002, -6.693589e-002, 6.582991e-003, 5.921380e-003, 4.555619e-003, 1.795434e-002, -2.845919e-002, 4.132805e-003, -1.715908e-003, 3.685486e-003, 6.938324e-003, 1.017760e-002, 9.663535e-002, 4.074252e-002, 4.074252e-002, 9.663535e-002, 2.617452e-002, 4.727191e-003, -8.972775e-004, 8.354914e-003, 2.001874e-002, 3.334702e-003, -7.064660e-004, 3.265071e-003, -4.215105e-003, 5.315454e-004, -3.006569e-002, -1.523999e-002, 1.094503e-002, 1.094503e-002, -1.523999e-002, 4.412833e-002, -3.760173e-002, 7.617259e-004, -2.450149e-002, -2.236286e-002, 5.662626e-002, -8.677128e-003, 6.806684e-003, -1.821249e-002, 1.514674e-002, -5.220077e-002, -5.908382e-003, -2.314082e-002, -2.314082e-002, -5.908382e-003, -8.795531e-002, 1.853525e-002, -1.971959e-002, -3.063090e-002, -2.139537e-002, -2.601681e-002, -1.027205e-002, -9.910099e-003, -9.760917e-003, -1.554824e-002, 1.162434e-002, -5.277393e-003, -3.566304e-003, -3.566304e-003, -5.277393e-003, 5.545813e-002, 1.536489e-002, -1.008391e-003, -6.189745e-003, -8.918167e-003, -3.152602e-002, 7.065122e-003, -4.021740e-003, -5.901343e-003, -2.425028e-002, -4.017206e-002, -3.844452e-002, 8.596714e-003, 8.596714e-003, -3.844452e-002, -4.860849e-003, -1.567214e-003, -5.573125e-003, -2.160945e-003, -1.190224e-004, -2.744326e-002, -3.528952e-002, -5.273063e-003, -7.975808e-003, -1.302338e-002, 4.984239e-002, 3.706164e-002, -3.104055e-002, -3.104055e-002, 3.706164e-002, -4.769873e-002, -4.526290e-002, -1.684962e-002, 2.609107e-003, -6.592944e-003, -6.037077e-003, -1.440668e-002, -6.292918e-003, -1.036040e-002, -1.770471e-002, 2.653036e-002, -1.786645e-003, 1.887769e-002, 1.887769e-002, -1.786645e-003, -8.946130e-002, -3.369825e-002, 4.214304e-003, -3.522405e-003, -5.135969e-002, -3.026068e-002, -7.554585e-003, 1.085121e-003, 1.189200e-002, -2.987003e-003, 4.884022e-002, 2.049332e-002, 6.464593e-003, 6.464593e-003, 2.049332e-002, -7.905385e-002, 7.724012e-003, -8.353748e-004, 2.232847e-003, -1.231807e-002, 2.866602e-002, 6.006783e-003, 2.720606e-003, 6.101615e-003, 1.177442e-002, -3.428220e-002, 7.946248e-002, 3.612655e-002, 3.612655e-002, 7.946248e-002, -1.097343e-001, -1.802027e-002, 2.554715e-003, -8.461644e-004, -1.569940e-002, 6.190102e-003, 1.526810e-003, 1.844210e-003, -3.306606e-003, 5.722871e-003, 1.344829e-002, -7.747163e-003, 1.197115e-003, 1.197115e-003, -7.747163e-003, -2.033774e-002, -2.688877e-002, 5.461835e-003, 8.180725e-003, -3.477982e-003, 6.334087e-004, 4.766996e-003, 1.104897e-002, 5.186958e-003, -2.276435e-003, -1.027852e-002, 1.738727e-002, -5.311177e-002, -5.311177e-002, 1.738727e-002, 5.309877e-003, 3.120588e-002, 2.754590e-002, 1.941514e-002, 8.930707e-002, 1.262256e-002, -1.207155e-002, 3.556786e-003, 2.043713e-002, 3.144434e-002, -5.297813e-002, 7.238891e-004, -6.501866e-003, -6.501866e-003, 7.238891e-004, 7.990363e-002, -7.730037e-003, -3.625672e-004, -5.698231e-003, -1.014829e-002, 1.962516e-002, 3.820608e-003, -1.148309e-004, -1.167699e-003, 1.036435e-002, 2.001477e-002, 6.085228e-002, 1.775223e-002, 1.775223e-002, 6.085228e-002, -1.742752e-002, -


© ISO/IEC 2004 — All rights reserved

Copyright International Organization for Standardization
Provided by IHS under license with ISO
No reproduction or networking permitted without license from IHS
Not for Resale

2.996585e-003, 7.895928e-004, -7.832392e-004, -6.457080e-004, 7.965714e-003, -2.999003e-003, 1.917906e-003, -1.557274e-003, 1.068083e-003, -1.895651e-003, -1.154083e-002, -5.157165e-002, -5.157165e-002, -1.154083e-002, 9.850560e-002, 5.159219e-002, -3.811259e-003, 3.982443e-002, -1.026028e-004, 5.174150e-002, -3.832635e-004, 2.195026e-002, 9.141135e-004, -8.972979e-004}, {2.518095e-004, 7.709292e-004, -4.481074e-004, 6.676357e-003, -3.497941e-003, 4.747089e-003, 2.699196e-003, -2.050249e-002, 2.280276e-002, -4.001306e-003, 1.652168e-002, 7.024300e-003, 1.652168e-002, -4.001306e-003, 2.280276e-002, -2.050249e-002, 2.699196e-003, 4.747089e-003, -3.497941e-003, 6.676357e-003, -4.481074e-004, 7.709292e-004, 1.239566e-002, -1.935644e-002, -1.446893e-002, 1.302941e-002, -6.798989e-003, 1.100047e-002, 3.596529e-002, -1.194426e-002, 1.694711e-002, 6.094315e-003, -3.781678e-002, -3.669044e-002, 7.578955e-002, 3.728394e-002, -1.795084e-002, 1.407389e-002, 3.899884e-002, -7.961708e-004, -7.582898e-004, 2.383506e-002, -9.865013e-003, -1.168887e-002, -2.011937e-002, 2.238946e-003, 2.272882e-002, 2.086317e-002, -1.746207e-002, 1.500433e-002, -4.986814e-003, -1.627025e-002, -1.248047e-002, -2.099359e-002, -7.674601e-002, -4.546460e-002, -1.995890e-002, 1.777707e-002, -9.305382e-003, 8.975696e-003, -5.857483e-002, -3.125904e-002, -3.487471e-002, 3.545226e-002, -1.931044e-002, -5.524585e-003, 2.667674e-002, 1.832581e-002, -8.011140e-003, -1.979400e-002, 1.789010e-002, -2.529703e-002, 1.700683e-002, -2.439438e-002, -7.434754e-003, 1.890902e-002, 1.272644e-002, -3.665727e-002, -7.628531e-002, -2.647281e-002, -2.209196e-002, -2.591986e-002, 3.266400e-002, 3.460928e-002, 5.011998e-002, 5.088977e-002, -6.485363e-003, -2.321971e-002, -4.263457e-002, 5.082278e-003, -1.646639e-002, 4.827870e-002, -1.644356e-003, 5.008502e-002, -4.773784e-002, 7.739603e-002, -6.137691e-002, -1.577511e-002, -5.759866e-002, -2.131016e-002, 1.103622e-002, -1.874873e-002, -5.712681e-002, -1.165567e-002, 7.379621e-002, 2.349774e-002, 3.519924e-002, 6.515083e-002, -4.116501e-002, 1.056549e-002, 6.346985e-003, 3.783842e-002, 8.735782e-004, -1.374170e-002, -1.792632e-002, -5.119102e-002, -6.676791e-004, -2.550870e-002, 4.850523e-002, -4.175936e-003, 2.413238e-002, -2.459217e-002, 4.808735e-003, 1.313856e-002, -3.867440e-002, 2.918300e-003, 7.764715e-002, 1.687986e-002, -7.598398e-003, 1.467873e-002, -9.736164e-003, 1.515776e-002, -3.794951e-003, 4.208640e-002, -1.817175e-002, 6.154052e-002, -8.515891e-003, 6.199275e-002, 1.241787e-002, 5.481229e-002, 4.293259e-002, -6.234426e-004, -5.587703e-002, -2.413453e-002, -2.940399e-002, -1.346877e-002, -5.392179e-003, -7.812277e-002, 6.776380e-002, -3.589247e-002, 3.022228e-002, 5.130052e-002, 3.530661e-002, -7.179644e-002, 9.788744e-003, 1.862379e-002, 3.402589e-002, -6.336605e-002, -1.317556e-002, 1.817736e-003, 3.161236e-002, 5.218419e-002, -7.752887e-003, -4.225031e-002, -2.053465e-003, 4.474792e-003, 1.798923e-002, -1.521230e-002, 5.697735e-002, 5.708954e-002, 6.010345e-003, 9.250997e-003, 4.876762e-002, 3.188615e-002, 2.388710e-002, 4.430270e-002, 8.514121e-002, 8.936233e-004, 1.408479e-003, -7.618918e-002, -3.045079e-002, -8.874266e-002, 5.228527e-002, 4.421795e-002, 2.798234e-002, 2.704411e-002, -7.883040e-003, 2.915767e-005, 4.023118e-002, 5.179596e-002, 4.598601e-002, 3.964461e-002, -3.210138e-002, -6.298394e-002, 3.274399e-002, 1.236288e-002, -7.243624e-002, -5.114887e-002, -6.544059e-002, -3.428020e-002, 2.597304e-003, -1.595820e-002, 1.698187e-003, -2.522303e-002, -3.685023e-002, 2.242503e-002, 2.644729e-002, 2.464823e-002, 2.158832e-002, 1.054866e-002, 2.599061e-002, 2.064645e-002, 4.955155e-003, 3.245379e-002, -3.447946e-002, 4.185068e-002, -1.007459e-002, -3.335397e-002, -4.165859e-002, -2.234889e-002, 1.248308e-002, -3.162349e-003, -1.582179e-002, 2.619822e-002, -1.846729e-002, -1.008925e-001, -3.457338e-003, -1.265776e-005, 2.430200e-002, 2.692165e-002, 1.052596e-002, 2.657378e-002, 2.438198e-002, 2.476946e-002, 1.990385e-002, 3.190159e-002, -2.759097e-002, 3.189608e-002, -6.285480e-003, -1.090452e-003, -1.798474e-002, 1.667682e-004, 5.003144e-002, -9.337864e-002, -3.088500e-002, -9.094588e-003, -6.084981e-002, 1.268582e-003, -1.493226e-002, 9.270816e-003, 2.342088e-002, 2.594774e-002, 6.350570e-003, 1.332871e-002, 1.163951e-002, 2.007249e-002, 1.415153e-002, 6.349182e-003, -9.561223e-003, -1.150372e-002, -6.927236e-002, 6.624331e-002, -3.402047e-002, -2.354433e-002, -8.292764e-003, 4.303322e-002, 3.713368e-002, 2.143097e-002, -3.203679e-002, -8.089997e-003, -2.797117e-002, -1.160379e-002, 8.418335e-003, 5.398899e-003, -3.996583e-003, -2.177811e-003, 1.119927e-002, -9.371737e-003, 3.792095e-003, 3.683115e-003, 1.431412e-002, 9.720673e-003, -3.173436e-002, 2.361036e-002, 3.655569e-002, 1.691647e-002, 1.113894e-001, -6.624841e-002, 1.391026e-002, 6.157908e-002, -2.921693e-002, -5.928334e-002, -3.344163e-002, -1.536335e-002, -4.863572e-003, -3.159648e-003, -4.402052e-003, -1.355925e-003, -8.682064e-003, -3.186858e-003, -2.750660e-004, -2.871109e-003, -1.114133e-002, -1.306010e-002, -1.659974e-002, 1.169910e-002, -1.828327e-002, -3.050714e-002, 1.266813e-003, -2.082153e-002, 2.217487e-002, 1.192475e-002, -3.730732e-002, -4.463468e-002, -4.463468e-002, -3.730732e-002, 1.192475e-002, 2.217487e-002, -2.082153e-002, -5.510531e-003, 2.848171e-003, 4.525882e-002, -1.672799e-002, 2.072903e-002, 8.138751e-003, -7.291682e-003, -4.004799e-002, -5.004669e-002, -2.660116e-002, -6.245896e-002, 3.429846e-002, 1.755360e-002, 1.653875e-002, -5.021475e-002, -5.300932e-002, -2.630011e-002, -3.146017e-002, -2.660856e-002, -2.171475e-002, -2.184549e-002, -1.305507e-001, 3.662535e-002, 3.826697e-002, 4.771790e-002, 5.170307e-002, 3.167360e-002, -4.166076e-003, -2.279460e-002, -2.553816e-003, -2.757655e-002, -8.731811e-002, 3.010108e-002, -2.216425e-002, 2.105354e-002, 7.031725e-003, 4.481092e-002, 4.053037e-002, 1.218596e-002, -1.029373e-002, -1.654507e-002, -

© ISO/IEC 2004 — All rights reserved


Copyright International Organization for Standardization
Provided by IHS under license with ISO
No reproduction or networking permitted without license from IHS
Not for Resale

4.161076e-002, -4.554830e-002, -1.531620e-002, -4.324377e-002, 6.056447e-002, 6.413380e-003, 1.348432e-002, 3.984930e-002, 2.309405e-002, -8.491360e-003, -7.850904e-003, -9.509091e-003, -2.604183e-002, -1.099378e-002, 1.386272e-002, 5.924359e-002, 3.515991e-003, 1.385790e-002, 2.847843e-002, 1.427990e-002, -2.838275e-003, -1.147283e-003, -4.735882e-003, -2.158921e-002, 4.630437e-002, 1.040885e-002, -1.748887e-002, -6.030174e-002, 2.196664e-002, -2.738605e-002, -3.167966e-002, -3.167966e-002, -2.738605e-002, 2.196664e-002, -6.030174e-002, -1.748887e-002, 4.038645e-002, -9.335577e-003, -9.429842e-002, -1.110072e-002, -4.953533e-002, -2.324001e-002, -1.802277e-002, -1.573114e-002, -2.244044e-002, -9.264660e-002, 8.771963e-002, 4.913099e-002, -5.439436e-002, -7.064972e-002, 1.123899e-002, -3.423163e-002, -2.840883e-002, 3.581398e-003, -4.660982e-002, -4.276298e-002, -6.220465e-002, -2.583135e-002, -2.758426e-003, 5.290256e-002, -9.773014e-002, -3.596827e-002, -1.905901e-002, -1.880886e-002, -2.298792e-002, 2.303022e-002, 4.539804e-002, -6.796985e-003, 3.755054e-002, -4.084877e-002, -8.130421e-002, -3.071022e-002, -3.481011e-002, -1.209938e-002, -1.079216e-002, 2.747937e-002, 5.117817e-002, 4.486479e-002, 3.476713e-002, -1.360319e-002, -3.613546e-002, -4.308624e-002, -1.571609e-002, -8.196887e-003, -7.949796e-003, -8.232862e-003, 3.021560e-002, 3.501224e-002, 4.154874e-002, 2.473637e-002, 1.441988e-002, 2.480976e-002, 4.273399e-002, -3.553317e-002, -1.087311e-002, -7.362034e-003, -3.435394e-003, 1.289330e-002, 1.906666e-002, 1.893669e-002, 4.015879e-003, 3.272589e-002, -3.676640e-003, 1.344195e-002, -3.314182e-002, -1.596584e-002, -4.461017e-002, 1.311220e-002, 1.311220e-002, -4.461017e-002, -1.596584e-002, -3.314182e-002, 1.344195e-002, 1.127742e-002, 1.218345e-001, -3.869833e-002, 2.560782e-002, 2.690731e-002, 5.195542e-003, -3.540993e-002, 1.877995e-003, 4.735591e-002, -4.384647e-002, -7.574665e-003, -5.028309e-002, -7.335457e-002, -9.195973e-002, 8.720313e-003, 1.810212e-003, 1.415514e-002, 2.272631e-002, 2.236966e-002, 5.332541e-002, 3.312278e-002, 4.563373e-002, 2.293427e-002, 4.892629e-002, -7.774099e-002, -1.635854e-002, 1.757613e-002, 7.050492e-003, 4.613339e-003, -1.378259e-002, -3.347358e-002, 2.019690e-002, 9.035346e-003, 4.625031e-003, -7.471871e-002, -9.944630e-002, -4.525327e-002, -6.866769e-003, 6.791940e-003, 1.378773e-002, -6.299834e-003, -2.555802e-002, -2.010706e-002, 4.525767e-002, -2.739764e-002, -2.302755e-002, -2.854301e-002, -5.431249e-002, -5.481113e-003, 7.592482e-003, 8.420473e-004, -1.834017e-003, -8.013995e-003, -1.547602e-002, 2.192193e-003, -1.268308e-002, 6.970417e-003, -1.756397e-002, -3.743549e-002, -1.938310e-002, -1.046335e-003, 3.319601e-003, -1.187895e-003, 4.874262e-004, -1.430852e-003, 5.252363e-003, -7.747213e-003, 2.380732e-002, -5.400587e-003, -3.382716e-002, -1.182500e-002, 2.646411e-003, 2.646411e-003, -1.182500e-002, -3.382716e-002, -5.400587e-003, 2.380732e-002, 7.410265e-002, 7.424368e-003, 1.779148e-002, 6.379066e-002, -4.394298e-002, -5.819608e-002, -7.544432e-003, 9.746223e-003, 1.936228e-002, -2.389963e-002, 6.702009e-002, -4.738149e-002, -9.030075e-002, -2.460533e-002, -7.062729e-003, 5.690675e-002, 9.144138e-003, 1.064577e-002, 1.891420e-002, 2.969065e-002, -6.535621e-002, 6.742125e-002, -7.074242e-002, 1.309469e-001, -4.568710e-002, -4.153779e-002, -2.700687e-002, -3.478851e-003, 8.004877e-003, -9.948638e-003, -4.416569e-003, -1.012933e-001, 7.693016e-002, -3.145804e-003, 3.044615e-002, -2.834747e-002, 3.616644e-003, 8.114838e-003, -1.178767e-002, -7.214510e-003, -3.188269e-003, -3.575162e-002, -8.502326e-002, -9.200913e-002, -3.378765e-002, -2.208079e-002, -4.327338e-003, -5.943662e-003, 3.170569e-003, -1.221731e-003, -5.355599e-004, -1.341282e-002, -3.449137e-002, -4.104136e-002, -9.075721e-003, -3.651029e-002, 5.679817e-003, -2.911414e-004, -4.448212e-003, -2.443621e-003, -7.759823e-003, -5.554675e-003, -2.271318e-002, -3.143156e-002, -3.056349e-002, -4.019033e-003, -3.105461e-002, 5.048688e-002, -5.349294e-003, -5.349294e-003, 5.048688e-002, -1.121417e-001, 5.065338e-002, -7.738012e-003, -1.436516e-002, -2.752660e-002, -4.041940e-002, 1.188683e-002, 3.984610e-002, -1.968491e-003, -7.728328e-003, 4.194294e-002, -3.417186e-002, -2.297399e-002, -2.297399e-002, -3.417186e-002, -6.155816e-002, -5.140719e-002, -1.959871e-002, -9.235410e-003, -7.946913e-003, -3.844798e-002, 2.462871e-003, 4.028914e-003, -1.121488e-003, -4.172586e-003, -3.792523e-002, -1.514996e-002, -1.001159e-002, -1.001159e-002, -1.514996e-002, -7.958122e-002, -8.329105e-003, -3.224315e-003, -1.201506e-002, -2.360914e-002, -4.608021e-002, -4.529626e-003, 9.404391e-004, 9.086003e-003, 1.527364e-002, -3.919928e-002, 7.039657e-002, -1.738719e-002, -1.738719e-002, 7.039657e-002, -2.618920e-002, -6.044710e-002, -1.467593e-002, -2.540911e-002, 2.571915e-002, -7.080070e-003, -1.265772e-002, -2.608282e-003, 4.541227e-002, -8.272821e-003, 5.455164e-003, -1.435617e-002, 4.593005e-002, 4.593005e-002, -1.435617e-002, -3.717503e-002, -5.264084e-002, -2.657056e-002, -2.423763e-002, -6.079133e-002, -2.565215e-002, -1.522296e-002, 2.089360e-003, -1.172740e-002, -1.800970e-002, -1.507668e-002, 4.961312e-002, 1.074183e-002, 1.074183e-002, 4.961312e-002, 1.298292e-001, -2.222912e-002, -1.215630e-002, -9.243025e-003, -5.673866e-003, -9.594794e-003, -5.653682e-003, 4.531076e-003, -2.509747e-003, -4.039720e-002, 1.007534e-001, -2.048287e-002, 1.565069e-003, 1.565069e-003, -2.048287e-002, 7.760936e-002, 1.157781e-002, -9.862997e-003, -1.599545e-002, -1.323862e-002, -2.804558e-002, -3.828250e-002, -6.230813e-003, -5.161651e-003, -4.742444e-003, -1.322001e-002, 2.900758e-002, 1.696830e-002, 1.696830e-002, 2.900758e-002, 1.204659e-002, -4.580734e-002, -3.148366e-002, -1.804153e-002, -1.172120e-002, -1.467370e-002, -1.964964e-002, -9.328498e-003, 2.058827e-003, 2.845175e-003, 2.477522e-002, 5.409746e-002, 2.113057e-002, 2.113057e-002, 5.409746e-002, -1.019332e-001, -3.399205e-002, -1.170324e-002,


© ISO/IEC 2004 — All rights reserved

Copyright International Organization for Standardization
Provided by IHS under license with ISO
No reproduction or networking permitted without license from IHS
Not for Resale

7.882869e-003, -3.480145e-002, -3.958383e-002, -1.996974e-002, -5.804722e-003, -1.570820e-002, -1.868539e-002, -2.294558e-002, 2.639527e-002, 2.898324e-003, 2.898324e-003, 2.639527e-002, -1.936871e-002, -6.143276e-003, 1.046615e-002, -7.343631e-004, -8.124830e-004, 1.345232e-002, -2.655844e-002, 7.086020e-003, -4.987628e-003, 5.575637e-003, -7.682835e-002, 7.140769e-002, 1.206097e-002, 1.206097e-002, 7.140769e-002, -2.261972e-002, -4.297229e-003, -3.705494e-003, 6.313524e-003, -3.024514e-003, 3.544900e-003, -3.718636e-004, -5.840145e-003, 1.836999e-003, -2.757358e-002, 1.526634e-003, 3.298506e-002, 2.686839e-002, 2.686839e-002, 3.298506e-002, -8.431051e-002, -4.451743e-002, 1.581097e-002, -1.522587e-002, -2.995360e-002, -3.681432e-002, -1.785315e-002, -7.568229e-003, -1.309858e-002, -1.955891e-002, -1.402148e-002, 1.183291e-002, -1.736431e-002, -1.736431e-002, 1.183291e-002, 3.958001e-002, -1.149778e-002, 4.551182e-003, 1.571896e-002, 3.573580e-002, 8.099044e-003, -4.408633e-002, 2.193002e-003, 2.485554e-003, 5.309321e-003, 8.515201e-003, 2.455609e-002, 2.177153e-003, 2.177153e-003, 2.455609e-002, 9.533536e-002, -3.423871e-003, 2.423695e-003, 6.032362e-003, 2.125988e-002, -1.537683e-002, -5.824922e-003, 3.176510e-004, 5.061877e-003, 2.944562e-003, 3.830148e-002, -2.993235e-002, -2.394371e-002, -2.394371e-002, -2.993235e-002, 6.641268e-002, 5.212798e-003, -1.368381e-005, 8.316621e-003, 4.316401e-003, -1.406070e-002, 8.481520e-003, 2.667320e-003, 4.418050e-003, 9.041201e-004, 2.925302e-002, -2.840385e-002, -6.880512e-002, -6.880512e-002, -2.840385e-002, -1.515510e-002, 6.247777e-003, 1.185618e-003, 1.831008e-002, -3.557423e-002, -3.685612e-003, -6.329634e-003, -1.134945e-003, -1.046387e-002, -4.005379e-002},
{-2.045223e-003, 2.957356e-003, -1.829208e-004, 3.925830e-003, 1.096320e-002, -1.274679e-003, -4.263788e-003, 2.623218e-003, -3.965345e-003, -3.181816e-003, -3.475429e-003, 2.832996e-002, -3.475429e-003, -3.181816e-003, -3.965345e-003, 2.623218e-003, -4.263788e-003, -1.274679e-003, 1.096320e-002, 3.925830e-003, -1.829208e-004, 2.957356e-003, 2.064245e-003, -1.438641e-002, 3.166515e-002, 3.589208e-003, -1.270510e-002, 1.491061e-002, -7.361541e-003, -3.437473e-002, -5.287780e-002, 6.777294e-002, -9.380430e-003, -7.661774e-002, 3.082130e-002, -6.968493e-002, 1.667253e-002, -2.207244e-002, 1.353508e-002, 3.480698e-002, -3.136719e-003, 1.584536e-003, 2.204043e-002, -2.798868e-004, 1.228393e-002, -3.312423e-002, -7.272807e-003, 1.823242e-002, 1.177228e-002, -4.006611e-003, 3.913302e-002, -5.632828e-002, 3.863032e-002, 3.385285e-003, 1.000382e-002, -6.328089e-002, 4.539119e-002, -3.063784e-002, -4.830787e-003, -5.353804e-002, -2.266711e-002, 3.384998e-003, 7.361804e-002, 1.380297e-003, -3.049949e-002, -3.264522e-002, -3.315915e-002, -1.360998e-002, -2.415339e-002, 2.461064e-004, 2.693521e-002, -2.231696e-002, 5.766938e-002, -2.434982e-002, -1.043490e-002, -2.512162e-002, 5.202543e-002, 3.653952e-002, -2.670426e-002, 1.894186e-003, -4.672267e-002, -3.542370e-002, -6.493077e-003, 3.186057e-002, 1.742340e-002, -5.751196e-003, -2.236846e-002, -1.302545e-003, 3.477352e-002, 2.005837e-002, -3.063200e-003, -2.171569e-002, 8.663424e-003, -2.870307e-002, 8.604321e-003, -1.356315e-003, 2.691041e-002, 4.097214e-002, -5.880587e-002, -4.387963e-002, -3.503645e-002, -5.227406e-002, 1.362011e-002, -7.560801e-003, -6.757661e-003, 4.962135e-002, 3.226001e-002, -1.016323e-002, 2.949513e-003, 1.867342e-002, 2.610073e-002, -2.224184e-002, -4.164464e-002, -1.688636e-002, -3.550396e-002, -4.552098e-002, 1.897614e-002, 1.316479e-002, 2.357426e-002, 3.503474e-002, 6.031984e-003, 2.946871e-002, -4.889110e-002, -5.387643e-002, -1.789000e-002, -1.058568e-001, 1.803404e-003, -3.510814e-002, 4.541714e-003, 2.323464e-002, 9.374017e-003, -5.145276e-003, 3.919037e-002, -9.201480e-002, 2.783560e-002, -5.029633e-002, -1.529743e-002, 1.421724e-002, 7.619857e-002, 3.984730e-002, 8.267461e-003, 1.389814e-002, 3.221097e-002, -1.320810e-002, 5.054593e-002, 2.074261e-002, -4.973630e-002, 4.814036e-002, -8.980055e-002, -3.580164e-002, 6.530609e-002, -3.719288e-002, -1.813029e-002, -4.417667e-002, -1.762462e-002, -2.578105e-002, -4.865927e-002, -4.065244e-002, -3.539836e-002, -8.326374e-003, 8.422993e-002, -2.129491e-002, 9.640144e-003, 3.314965e-002, 9.766795e-004, 4.719403e-004, 1.252028e-002, 2.503888e-002, -8.691326e-003, -1.950540e-002, 1.884625e-002, -1.542828e-002, -3.931235e-003, 2.376163e-002, 3.024618e-003, -6.580779e-002, 1.633474e-002, 4.657851e-002, 3.104734e-002, -1.262955e-002, -1.057043e-002, -3.910436e-002, 1.892608e-002, 2.659494e-002, 2.311579e-002, 3.178210e-002, 8.642665e-003, 8.349046e-003, -2.842280e-002, -1.586193e-002, 1.480555e-002, 5.461950e-002, 4.356121e-002, -2.320125e-002, -1.450876e-002, 1.569794e-002, 7.913764e-002, -1.390396e-002, -5.025896e-003, 2.377363e-002, 6.625321e-002, -2.665188e-002, -7.125381e-002, 2.204560e-002, 2.038179e-002, -1.506750e-002, 8.460123e-003, 9.852658e-003, 1.050033e-003, -2.763177e-002, -4.236896e-002, -1.269350e-002, 2.086351e-003, 1.691156e-002, 6.341468e-002, 1.285724e-001, 9.393328e-003, -3.906195e-002, 2.206839e-002, 3.946104e-002, 5.751637e-003, 1.080652e-003, 5.242728e-002, 1.366217e-002, 1.324310e-002, -2.196174e-003, 1.325369e-003, -7.811900e-003, 2.567982e-002, 1.917209e-002, 5.802498e-003, 8.462857e-003, 1.002052e-003, 1.375029e-002, 3.762989e-002, 2.496866e-002, 4.408610e-002, 5.224038e-002, -6.843096e-002, -4.485626e-003, 5.994904e-003, -1.356718e-002, 1.072765e-002, 1.736925e-003, 1.474513e-002, 4.949289e-002, -3.861531e-002, -4.481177e-002, 1.790536e-002, 8.717333e-003, 2.922005e-002, 1.263765e-002, 7.761282e-003, -5.014723e-004, 1.104796e-002, 3.208178e-002, 9.978348e-003, 2.677491e-002, 4.274416e-002, 3.796564e-002, -2.317254e-002, 1.001045e-002, 1.944627e-002, 1.291669e-002, -3.197872e-002, 1.702328e-002, 5.095123e-002, -6.155541e-003, -2.789263e-002, 1.512181e-002, 2.429445e-002, 3.368652e-003,

© ISO/IEC 2004 — All rights reserved


Copyright International Organization for Standardization
Provided by IHS under license with ISO
No reproduction or networking permitted without license from IHS
Not for Resale

2.526885e-003, 2.892111e-003, -1.474616e-003, 1.185825e-002, 1.701714e-002, 1.959526e-002, 1.514389e-002, 1.276140e-002, 1.482090e-002, 1.957663e-002, -1.064851e-002, 1.335152e-001, -1.395638e-002, 1.321712e-002, 3.244527e-002, -5.667849e-002, -3.745540e-002, 4.254504e-002, -1.257515e-002, 1.125280e-002, 1.974679e-002, -4.541982e-003, -7.248547e-003, 8.528218e-003, 4.255555e-003, 1.271631e-002, 6.593987e-003, 1.982045e-002, 1.284482e-002, 4.489783e-003, 3.036554e-002, 2.157342e-002, -1.540705e-002, 2.017615e-002, -7.734138e-002, -7.721539e-002, -2.002750e-002, 2.168152e-002, -4.629244e-002, 4.017267e-002, -6.167180e-003, -2.571601e-002, -2.571601e-002, -6.167180e-003, 4.017267e-002, -4.629244e-002, 2.168152e-002, -4.369792e-002, 1.476029e-002, 1.351519e-001, 3.456999e-002, -2.529457e-002, 1.961590e-002, 5.726959e-003, -1.770981e-002, -3.610872e-002, 2.303234e-002, 3.069209e-002, 8.583433e-003, -1.546836e-001, 4.181348e-002, 3.239709e-002, 1.878785e-002, 3.059411e-002, -1.359605e-002, -6.100903e-003, -2.186016e-002, 1.598092e-002, 4.497461e-002, -1.451952e-003, 5.443425e-002, 2.577246e-002, 1.394882e-002, -7.750723e-003, -2.285886e-003, -8.851877e-003, -2.204873e-002, -8.582795e-003, -4.088145e-002, 1.085364e-001, -3.607290e-002, 7.588901e-002, -3.280898e-002, -8.364717e-004, 3.148141e-002, 1.143755e-002, -1.153000e-002, -1.916897e-002, -1.214032e-002, -1.779977e-002, 5.977347e-003, 1.093747e-002, 3.746134e-002, -4.177968e-002, -1.802459e-002, 1.828008e-002, 4.872461e-003, -4.702846e-003, -1.194195e-002, 5.879959e-003, 6.842574e-003, -1.465576e-002, 2.494517e-002, 6.031654e-002, 9.554810e-003, 8.323931e-003, 9.974110e-003, 5.940938e-003, -1.407908e-003, -7.753056e-003, -1.073839e-003, 8.676602e-003, 5.138382e-002, 8.745828e-003, 1.713342e-002, -3.652670e-002, 5.349253e-003, 5.133397e-005, 1.305066e-002, 1.305066e-002, 5.133397e-005, 5.349253e-003, -3.652670e-002, 1.713342e-002, -1.652937e-002, 8.816646e-002, 5.303015e-002, -7.266620e-002, -4.533239e-002, -1.257047e-002, -5.195257e-002, -6.021448e-002, -8.953797e-002, -1.026706e-001, -3.869668e-003, -6.405480e-002, 1.095250e-001, -7.817765e-002, -2.073580e-002, -2.657289e-003, -5.348548e-003, -2.151100e-002, -8.625462e-003, -1.519577e-002, 8.520985e-002, -1.189357e-001, 1.666513e-001, 1.247596e-001, -7.152320e-002, -5.931398e-003, -1.034147e-002, -1.566276e-002, -8.232595e-003, -1.955602e-002, -5.094893e-002, 3.537450e-003, 1.080332e-001, -4.859523e-002, -1.362799e-002, -1.337480e-002, -1.450730e-002, -1.260449e-002, -1.330897e-002, -1.522555e-002, 1.191527e-002, 2.116935e-002, -2.999229e-002, 7.562422e-002, -2.179749e-002, 2.345957e-002, 8.749468e-003, -1.369226e-003, -4.643344e-003, -5.018816e-003, -4.809762e-005, 9.105113e-003, 4.093151e-002, -1.391064e-002, 2.323919e-002, 5.929745e-002, 6.793221e-002, -4.842985e-004, 2.307387e-006, -6.910212e-003, 5.341218e-005, 1.050916e-002, 2.087341e-002, 1.841292e-002, 1.693854e-002, 4.522214e-002, 1.522758e-002, -1.620585e-002, 7.857176e-003, -1.435815e-003, 4.169030e-002, 8.545987e-003, 8.545987e-003, 4.169030e-002, -1.435815e-003, 7.857176e-003, -1.620585e-002, -5.698767e-003, -1.448424e-002, -6.750439e-002, -9.345223e-002, 9.121949e-003, -6.771208e-003, -3.497623e-002, -6.606016e-002, 6.861752e-003, 4.605496e-002, 5.523516e-002, 4.428718e-002, -2.460982e-002, 8.067446e-002, 3.754963e-002, 1.331230e-002, 2.893508e-002, 3.689359e-004, 2.834822e-002, 1.072950e-001, -8.121448e-002, -1.140490e-001, -3.371272e-002, 1.775465e-002, -2.225918e-002, 3.096749e-002, 7.232461e-003, -3.929705e-003, 9.105470e-003, -1.692798e-002, -7.622765e-002, -8.149485e-002, -9.183586e-002, 4.574098e-002, 5.173462e-002, -7.094180e-003, 1.387933e-002, 2.402032e-002, 1.190711e-002, -5.786718e-004, -8.453101e-003, 9.749470e-003, -1.026146e-003, 3.100013e-002, -1.977153e-002, 2.503850e-002, 1.179134e-002, 1.458516e-002, 2.541738e-002, 1.702138e-002, -1.194337e-002, -9.644245e-003, 1.614039e-004, -9.950247e-003, 7.301420e-003, -4.943336e-003, -6.677858e-003, 2.213860e-003, 1.813901e-003, 1.031074e-002, 1.412881e-002, -1.639716e-003, -9.266752e-003, 3.259500e-003, 6.162777e-003, -3.294584e-002, -5.991132e-003, -9.804225e-003, 9.010848e-003, 1.934342e-002, -1.437473e-003, 2.631539e-003, 2.631539e-003, -1.437473e-003, 1.934342e-002, 9.010848e-003, -9.804225e-003, -2.231916e-003, -8.010770e-003, 4.251453e-002, 9.607003e-003, -4.825047e-002, -3.045363e-002, 4.649392e-003, 9.553801e-002, 9.967579e-002, -5.284261e-003, -5.218066e-002, 4.017422e-002, -3.972057e-002, 7.439908e-002, 1.119794e-001, 2.695328e-002, -9.871814e-003, 1.878592e-002, 3.632733e-002, -3.819868e-003, 9.498827e-003, -6.355074e-002, -1.039171e-001, 9.030395e-003, -8.792387e-002, -3.193432e-002, 2.996144e-002, 1.106719e-002, 1.332954e-002, -3.110867e-003, -1.343967e-002, 1.745242e-002, 1.360966e-001, -8.384630e-003, -1.644726e-002, -6.252866e-005, 9.203077e-003, -1.264197e-002, 4.834650e-004, 1.342485e-002, 3.156743e-002, 4.804469e-002, 4.025826e-002, 2.732100e-002, -3.636163e-002, -1.404319e-002, 6.783621e-003, 2.474980e-003, -1.625756e-003, -1.899632e-003, 9.186927e-003, 2.683044e-002, 3.822636e-002, 3.627580e-003, 4.747523e-003, -4.325633e-002, -2.963290e-002, -3.368507e-003, -4.973710e-003, -4.393202e-003, -6.051802e-003, 1.425957e-002, 1.457864e-002, 1.220855e-002, 9.916299e-003, -1.520654e-002, 5.089036e-002, -5.103643e-002, -1.333735e-002, -1.333735e-002, -5.103643e-002, 2.338436e-002, -1.790186e-002, 1.043618e-002, -5.230647e-004, 7.103256e-003, 3.862593e-003, 2.142014e-002, -8.743082e-003, -1.586957e-003, -6.876196e-003, 4.021308e-002, -3.498452e-002, -2.234060e-002, -2.234060e-002, -3.498452e-002, 2.703393e-002, -2.862049e-002, -1.132081e-003, -8.221426e-003, 3.648429e-003, 2.431141e-003, -1.517402e-002, -4.281399e-003, -6.128409e-003, -3.723997e-003, 3.785351e-003, -1.510485e-002, -1.006780e-002, -1.006780e-002, -1.510485e-002, 4.500602e-002, 1.899951e-004, -3.031752e-003, -8.662299e-003, 1.169691e-003, -


© ISO/IEC 2004 — All rights reserved

Copyright International Organization for Standardization
Provided by IHS under license with ISO
No reproduction or networking permitted without license from IHS
Not for Resale

3.324822e-003, -6.194047e-003, -2.206901e-003, -2.627438e-003, -6.268479e-003, -2.154177e-002, 4.538835e-002, 2.958542e-002, 2.958542e-002, 4.538835e-002, -4.479929e-002, -1.618631e-002, -2.611913e-002, -3.127546e-002, -5.376575e-002, 2.852551e-003, -1.569551e-002, -1.193206e-002, -1.929184e-002, 4.753242e-003, -5.283922e-002, 5.769791e-002, 5.957820e-003, 5.957820e-003, 5.769791e-002, 5.217256e-002, 3.935601e-002, 5.816954e-003, -2.231123e-002, 4.578936e-003, 2.895571e-003, 1.150802e-002, 2.366846e-003, -1.982976e-002, -2.896652e-003, -5.829171e-002, 1.791713e-002, 1.616873e-002, 1.616873e-002, 1.791713e-002, -4.169226e-002, 3.890725e-003, 2.962308e-003, 6.484667e-003, 2.790458e-002, 5.115908e-002, 1.644487e-002, 9.504793e-003, 2.061843e-003, -8.201012e-003, 3.673313e-002, 2.646981e-002, -2.636307e-003, -2.636307e-003, 2.646981e-002, 5.558377e-003, 4.551037e-002, 9.046384e-003, 3.376816e-003, -2.757653e-003, 4.243184e-002, 1.018686e-003, 2.634467e-003, 9.057102e-003, 1.009018e-002, -1.023088e-002, 2.669227e-002, 1.013885e-002, 1.013885e-002, 2.669227e-002, 3.896103e-002, -3.579109e-003, -1.733270e-002, -1.366289e-002, 4.466740e-002, 8.489390e-003, -6.524780e-003, -1.216342e-002, -2.654381e-003, -8.596149e-004, 5.321085e-002, -1.307346e-002, -3.130646e-002, -3.130646e-002, -1.307346e-002, -1.418403e-001, -2.593368e-002, -1.570441e-003, -7.747072e-003, -7.144335e-002, -4.523747e-002, -1.113589e-002, -5.214699e-003, -1.035545e-002, -1.060378e-002, 2.950427e-003, 2.725839e-002, 6.530988e-004, 6.530988e-004, 2.725839e-002, 6.045757e-002, 9.827924e-003, 7.909849e-003, -5.204641e-003, 8.218112e-003, 3.574351e-002, 1.969618e-002, 1.069799e-002, 1.388642e-003, -7.925275e-003, -4.306258e-002, 2.295054e-002, -1.878808e-002, -1.878808e-002, 2.295054e-002, 6.995678e-002, 1.140759e-002, -4.787803e-003, 7.610081e-003, -3.790303e-003, 2.497252e-002, -1.974070e-002, 1.608049e-003, 8.621438e-003, 2.380987e-002, -6.196260e-003, -4.531457e-002, -2.782857e-002, -2.782857e-002, -4.531457e-002, 2.770297e-003, 3.031239e-002, 1.362412e-002, 3.971464e-003, 1.566550e-002, -5.235600e-004, 1.352327e-002, 1.785811e-003, 4.018219e-003, 1.203656e-002, -4.993785e-002, -3.297719e-002, 1.503500e-002, 1.503500e-002, -3.297719e-002, -9.005688e-002, -2.091484e-002, 9.039540e-004, 1.299484e-002, -2.074319e-002, -4.246753e-003, -3.716242e-003, 1.389725e-002, 4.925763e-003, 4.581053e-003, 9.004151e-003, -4.864097e-002, -2.268880e-002, -2.268880e-002, -4.864097e-002, 2.629306e-002, 3.299087e-002, 1.864765e-002, 7.888106e-003, 1.589379e-002, 9.541133e-003, 4.799561e-003, 5.723249e-003, 8.480833e-004, -8.014465e-003, 3.791130e-002, -4.374020e-002, -8.588880e-003, -8.588880e-003, -4.374020e-002, 4.835600e-003, 2.731505e-002, 7.131671e-003, 7.502147e-003, 1.717095e-002, -1.696132e-002, -2.981263e-003, -1.565091e-003, 3.784157e-003, 1.474577e-002, 5.356411e-003, -1.428999e-002, 8.989653e-003, 8.989653e-003, -1.428999e-002, -5.000249e-002, -2.892438e-003, 2.154382e-002, 3.633914e-002, 4.101130e-002, -2.445084e-003, 2.395203e-003, 3.647371e-003, 1.675390e-002, 9.771200e-003},
{-5.370655e-004, 2.742761e-003, 1.660965e-002, -9.818883e-003, 1.272391e-003, -3.439695e-004, 3.835123e-003, -1.126339e-002, -2.211548e-002, 4.094900e-002, 8.706535e-004, -7.408928e-002, 8.706535e-004, 4.094900e-002, -2.211548e-002, -1.126339e-002, 3.835123e-003, -3.439695e-004, 1.272391e-003, -9.818883e-003, 1.660965e-002, 2.742761e-003, -2.042621e-003, 2.949904e-002, -7.259542e-003, -1.774907e-002, -1.263034e-002, -6.352036e-003, -2.050533e-002, -2.184154e-002, 2.384564e-002, 2.370867e-002, 2.887483e-002, 4.369975e-002, -5.893653e-002, 8.455982e-003, 2.807065e-002, -6.176212e-002, 1.067317e-002, -1.419735e-002, 1.476135e-003, -7.381062e-003, -1.318720e-002, 5.815413e-003, -1.442853e-002, -9.000179e-003, 1.832868e-002, -1.145204e-002, 2.206851e-002, 2.095242e-002, 7.019980e-003, 3.800792e-002, -1.837580e-002, -2.970850e-003, -7.781067e-003, 2.510597e-002, -9.867587e-003, -2.795591e-003, -1.199993e-002, 2.236691e-002, -6.570959e-003, -1.023739e-002, -2.154551e-002, 1.278024e-002, 1.717631e-002, 2.106955e-004, -3.496061e-002, 2.612411e-002, 4.467641e-002, -3.666629e-002, 4.374536e-002, 1.177418e-002, -7.967138e-003, 2.480474e-002, -2.787137e-002, -8.582901e-003, -3.985764e-002, 9.947580e-002, -1.005488e-002, 4.619536e-002, 2.730279e-002, 3.659314e-002, 1.364662e-002, -6.749430e-003, 4.373820e-002, 2.946035e-002, -1.012368e-002, -8.868142e-003, -6.687680e-002, -2.556351e-002, -9.708600e-003, -1.347053e-002, 3.996339e-002, 6.496595e-002, -5.257905e-003, 4.296241e-002, -2.087548e-002, 3.491912e-003, -3.750349e-002, 1.752833e-002, 2.448351e-002, 9.239732e-002, 1.216713e-002, 1.580748e-002, -2.711995e-002, 2.403144e-002, 4.109311e-002, 1.341499e-002, 2.022313e-003, 1.020378e-002, 2.070441e-002, 5.418670e-003, 5.302479e-002, 2.845406e-002, 2.930681e-002, 2.480340e-002, 1.979881e-002, 7.890464e-002, 9.668872e-003, 4.029206e-002, 4.592736e-002, 6.765799e-002, 4.805725e-002, 3.512698e-002, -1.175533e-003, 9.001498e-002, 4.725300e-002, 3.332772e-002, -2.635758e-002, -4.634890e-002, 2.166857e-003, -3.005975e-005, -1.112500e-003, -7.170593e-002, 2.355176e-002, 2.754286e-003, 2.995522e-002, -5.243360e-002, -1.625724e-002, -2.403386e-003, -1.877493e-002, 1.304153e-002, -5.140976e-004, 2.417752e-003, 3.882044e-002, 3.790982e-003, 2.987840e-002, 5.281234e-002, -5.099118e-002, -1.601766e-002, 5.941271e-002, -8.765809e-003, -1.937454e-002, -6.395859e-002, -3.055385e-002, -1.418786e-002, -2.354095e-002, -2.878596e-002, -5.288476e-002, 1.337510e-002, -2.821903e-002, -1.686048e-002, 4.109489e-003, 2.483715e-002, 1.814259e-002, -1.371253e-002, -1.958079e-002, 1.904034e-002, 1.559636e-002, -7.416379e-003, -8.623132e-002, -6.662910e-003, 4.792425e-002, 2.709369e-002, -4.898931e-002, 3.494834e-003, 6.329381e-002, -1.609005e-002, 3.650144e-002, 9.695196e-002, 9.163393e-002, 5.274438e-003, -1.502162e-002, -3.163444e-002, -

© ISO/IEC 2004 — All rights reserved


Copyright International Organization for Standardization
Provided by IHS under license with ISO
No reproduction or networking permitted without license from IHS
Not for Resale

3.206066e-002, -3.195104e-002, -9.637547e-003, 1.403344e-002, 1.237991e-002, -1.005982e-002, -1.696366e-002, -3.258591e-002, -2.717754e-002, -4.451341e-002, 7.773381e-003, 8.947399e-003, 2.366944e-002, -9.324353e-003, -2.906904e-002, 1.145600e-001, 6.939536e-003, 2.161431e-002, 1.366437e-002, -4.033549e-002, -4.503303e-002, 2.093121e-003, 9.766996e-003, -2.008851e-002, -4.424721e-003, -5.027245e-003, 1.328821e-002, 1.641800e-002, 3.049005e-002, 1.193755e-002, 3.322249e-002, -1.653184e-002, -4.005626e-002, 3.276409e-002, -8.290804e-002, 6.085600e-002, 3.859808e-002, -5.147366e-002, -5.013734e-002, -1.203703e-002, 3.286594e-002, -8.551028e-002, 1.422325e-002, -2.904931e-002, -4.108279e-003, -7.727833e-003, 7.512696e-003, -8.438271e-003, -1.338935e-002, -1.289771e-002, -1.441437e-003, -1.302600e-002, 7.236016e-002, 4.870765e-002, 7.911995e-002, -5.696479e-002, -1.109803e-001, -3.074344e-002, 1.614927e-002, -1.476166e-002, -4.738745e-002, -1.007291e-001, 1.131392e-002, 3.205563e-002, 2.922826e-002, 8.953557e-003, -2.839410e-002, 5.292483e-003, 3.849000e-003, -1.719866e-002, -1.039745e-002, -3.453412e-003, 1.025400e-003, -6.012936e-003, -7.397273e-003, -3.546188e-003, 4.547771e-002, -7.445275e-002, -5.606220e-002, -3.669258e-003, 5.486705e-002, -1.058954e-001, -2.597214e-002, -1.933822e-002, 6.665516e-003, -1.087928e-002, -2.904512e-002, -1.318558e-002, 9.913914e-003, 4.499947e-003, -4.975677e-003, -2.378647e-003, 7.750532e-003, 1.555740e-002, -2.174987e-003, -7.560378e-003, 1.173614e-002, -1.786361e-002, 5.711864e-003, 1.662085e-002, -5.973116e-002, 4.320866e-002, -3.286557e-002, 8.326479e-002, 5.261845e-002, 2.009943e-003, 1.137463e-002, -2.808746e-002, -3.072310e-002, -1.082660e-002, 1.284511e-002, -9.762845e-003, -7.872407e-005, -2.234355e-003, -5.038273e-003, -5.977337e-004, -2.376974e-003, -1.045783e-002, -2.018144e-002, -1.829707e-002, 3.858829e-002, -2.002830e-002, 3.559952e-002, 5.573470e-003, 1.211450e-002, 6.804384e-003, 2.052963e-002, -2.034789e-002, 2.728496e-002, -1.358071e-002, -1.358071e-002, 2.728496e-002, -2.034789e-002, 2.052963e-002, 6.804384e-003, 5.097129e-002, 1.822340e-002, -1.090260e-002, -3.737275e-002, -1.161025e-002, 1.956725e-003, 4.305488e-002, 4.794267e-002, 2.968806e-002, -5.148202e-004, -7.191467e-002, -1.515390e-002, 3.989174e-002, -1.894667e-002, -6.393454e-002, 2.172796e-002, 1.058256e-003, 2.161309e-002, 1.746887e-002, -2.524806e-002, -9.579143e-002, 9.961474e-002, 1.148254e-001, 1.897742e-002, -9.062740e-003, 4.264080e-002, 2.416267e-002, 9.673391e-003, 2.580554e-003, 1.031143e-002, 2.033902e-002, 6.775370e-002, -6.613952e-002, -2.014050e-001, -6.693158e-002, 3.538158e-002, 2.904660e-002, 9.198796e-003, 2.096034e-003, 9.869075e-003, 8.435421e-003, 3.476777e-002, 4.881597e-002, -5.606962e-002, -2.554928e-002, -3.962647e-002, -7.296497e-003, 4.067537e-003, 1.639694e-002, 8.413511e-003, 5.994388e-003, 1.636281e-002, 1.906428e-002, 1.971741e-004, 1.688980e-002, 1.777593e-003, -1.134206e-002, -1.446985e-002, -5.440918e-003, 1.501988e-002, -4.682773e-004, 8.104620e-004, 8.201274e-003, -3.892196e-003, 8.770764e-003, -1.734969e-002, -1.196168e-002, 1.038132e-002, 3.567397e-002, 1.126629e-002, 8.891765e-003, 2.529932e-002, 2.529932e-002, 8.891765e-003, 1.126629e-002, 3.567397e-002, 1.038132e-002, -2.356126e-003, 4.183449e-003, 4.501674e-002, 5.854786e-002, 4.256989e-002, 1.713535e-002, -5.523813e-003, -1.843945e-002, -5.407921e-002, 4.689565e-002, 8.070789e-002, 1.040696e-001, 2.050100e-002, -1.530969e-001, -5.535615e-002, 3.177219e-003, 3.638417e-003, 7.672832e-003, -1.829826e-002, -4.457872e-002, -1.414973e-003, -5.688808e-004, 1.056721e-001, -1.522429e-002, 3.955462e-002, -1.793178e-002, -2.540879e-003, 9.626027e-003, 2.019945e-002, 9.267269e-003, -6.201645e-002, -6.858041e-002, -7.852022e-003, -1.296112e-001, -8.339016e-003, 4.384450e-002, 1.776513e-002, 3.941167e-003, 3.150145e-003, 2.206225e-003, -1.029461e-002, -3.805930e-002, 1.662873e-002, -4.659131e-002, -8.393555e-002, 7.799747e-003, -7.062137e-003, 6.169277e-003, 1.811894e-003, 3.970708e-003, -5.157369e-003, 4.739599e-004, 1.546186e-002, -2.501586e-003, -6.934741e-002, -2.965279e-002, -2.770413e-002, -1.478309e-002, -3.390055e-004, 6.727606e-004, 4.612170e-003, 5.162319e-003, 5.373199e-003, -7.947360e-003, -3.237776e-002, -9.476580e-003, -5.858423e-003, -9.136196e-003, -6.275509e-003, -1.167234e-002, -2.164123e-003, -3.259884e-002, -3.259884e-002, -2.164123e-003, -1.167234e-002, -6.275509e-003, -9.136196e-003, -1.196218e-002, -1.892180e-002, -4.968802e-002, -1.461870e-001, -5.554065e-002, -1.503893e-002, -2.912132e-003, -3.174959e-003, -4.643704e-002, 6.807366e-002, 5.012325e-002, 9.342185e-003, -6.791895e-002, 3.830566e-002, -8.261103e-002, -6.225687e-002, -2.355991e-002, 1.142946e-003, -1.290842e-003, -2.673259e-002, 1.914824e-002, -4.089738e-002, 6.887787e-002, 1.201714e-002, -3.207101e-002, -4.979522e-002, -2.570360e-002, -7.436341e-003, 1.195856e-002, 2.009884e-002, 3.095690e-002, -1.660016e-003, 8.648953e-003, 2.737866e-002, 1.795840e-002, 1.924248e-002, -1.315960e-002, -1.376815e-002, -1.939083e-002, -1.533221e-002, -2.123780e-002, -4.606478e-002, -4.948259e-002, -2.200256e-002, 2.162464e-002, -2.732829e-002, 8.563007e-003, -1.792173e-002, -1.089647e-002, -1.458432e-002, -7.210693e-003, -9.289965e-003, -1.046562e-002, 1.315076e-004, -4.186569e-002, 1.629922e-002, -1.554234e-002, -3.086277e-002, -8.823737e-004, -8.616031e-003, -1.187513e-002, -6.940078e-003, -2.253228e-003, 7.269402e-004, -2.330253e-002, -1.642887e-002, 5.168537e-003, -1.581938e-002, -5.680304e-003, -2.070208e-002, 2.358690e-003, -3.280962e-002, -3.280962e-002, 2.358690e-003, -2.070208e-002, -5.680304e-003, -1.581938e-002, 4.893934e-002, -8.723113e-002, 2.521828e-002, -1.241624e-001, -3.681237e-002, 9.108481e-003, -2.297302e-002, -3.172885e-002, -8.255680e-002, 2.706644e-002, -9.883497e-003, 3.479157e-002, 5.885804e-002, -8.284977e-002, 5.133196e-002, 4.007562e-002, -4.869509e-003, 3.458742e-003,


© ISO/IEC 2004 — All rights reserved

Copyright International Organization for Standardization
Provided by IHS under license with ISO
No reproduction or networking permitted without license from IHS
Not for Resale

1.576049e-002, 1.848088e-002, 1.595461e-002, -2.068371e-002, 9.362597e-003, 3.314472e-002, 5.990379e-002, -2.072760e-002, -1.296399e-002, 1.721315e-002, 1.341727e-002, 1.363541e-002, 6.106065e-003, -3.416932e-003, 3.858586e-002, -7.527736e-002, -5.272520e-002, -2.112768e-002, -4.729376e-002, -1.612358e-002, -1.064279e-002, -1.540894e-003, -7.628272e-004, -3.098691e-003, -2.395327e-002, -1.275496e-002, -1.691801e-002, -2.380309e-002, -9.319268e-003, -3.335934e-002, -7.324339e-003, -8.740484e-003, -8.354499e-003, -5.528679e-003, -2.492360e-004, -5.972677e-003, -3.502578e-002, 1.300871e-002, -2.319664e-002, -1.089646e-002, -4.022733e-003, -9.441869e-003, -6.218556e-003, -6.432914e-003, -7.590144e-003, 1.518852e-003, 7.654415e-004, 2.303464e-003, -2.462451e-002, -4.638886e-002, 1.239936e-002, 1.239936e-002, -4.638886e-002, 5.670193e-002, -1.431955e-003, -5.390666e-003, 7.539555e-004, 1.284865e-002, 1.334093e-002, -6.372996e-003, 8.508701e-003, 3.837898e-003, 3.974328e-003, 1.334366e-002, 8.066629e-003, 9.761300e-003, 9.761300e-003, 8.066629e-003, -1.190703e-001, 4.565619e-003, 7.346759e-003, 8.820392e-003, 4.175479e-003, -6.380982e-002, 1.259848e-002, 1.542686e-002, 7.512751e-003, 1.247850e-002, -1.304702e-002, -3.805765e-002, -4.650865e-003, -4.650865e-003, -3.805765e-002, 1.548415e-002, -1.645445e-002, -1.196515e-002, -5.701398e-003, -1.833619e-002, -1.458288e-002, -7.345250e-004, -1.226426e-003, 1.755309e-003, 2.222835e-003, 1.656972e-002, -3.758143e-002, 2.310468e-002, 2.310468e-002, -3.758143e-002, -4.570122e-002, -4.364242e-002, -4.690819e-003, -3.843363e-002, -2.186645e-003, -4.114050e-003, -1.293093e-002, 9.433454e-004, -9.499456e-003, -1.227143e-002, -5.387426e-003, 1.837595e-003, -2.282428e-002, -2.282428e-002, 1.837595e-003, -8.364654e-002, -2.889179e-002, 1.155580e-002, 2.117742e-002, 4.246627e-003, -6.799462e-003, 7.389117e-003, 3.081410e-004, 8.309999e-003, 2.866529e-003, 2.878277e-002, -2.247123e-002, 2.010831e-002, 2.010831e-002, -2.247123e-002, 5.881394e-002, 5.937243e-003, 1.526572e-002, 1.986118e-002, 1.682434e-002, -7.718297e-002, 5.249783e-003, 7.855996e-003, 5.826182e-003, 2.688308e-002, -5.529034e-002, 1.126762e-002, 2.317732e-002, 2.317732e-002, 1.126762e-002, 9.736877e-002, 9.155995e-003, 1.808157e-002, 1.216840e-002, 1.478921e-002, -4.772151e-002, 1.594186e-002, 2.751329e-003, 4.530211e-004, 6.882427e-003, 3.980596e-002, -7.269794e-002, -1.777744e-002, -1.777744e-002, -7.269794e-002, -6.241862e-002, 6.332073e-003, 1.899830e-002, 1.673408e-002, -2.356523e-002, -1.307193e-002, 7.132034e-003, 1.178277e-002, -5.577183e-003, 8.366682e-003, 2.963617e-002, 3.041176e-002, -5.226924e-002, -5.226924e-002, 3.041176e-002, -1.490436e-002, -2.511879e-002, -1.955347e-002, 2.373904e-002, 3.309233e-002, -1.060409e-002, -1.531147e-003, -8.580696e-003, -1.888842e-003, -4.815090e-003, -5.153803e-002, 1.865600e-002, 8.601277e-003, 8.601277e-003, 1.865600e-002, -8.805934e-002, 9.545088e-003, -1.371790e-002, 1.710259e-003, 4.422171e-003, -2.327197e-002, 2.893002e-003, 3.824407e-003, -1.526136e-004, -1.180039e-002, -3.294472e-002, 6.342853e-002, 1.227252e-002, 1.227252e-002, 6.342853e-002, -9.340694e-002, 1.140531e-002, 6.638231e-003, 1.697676e-003, 1.298912e-002, -2.780375e-002, -3.623207e-003, -1.231955e-003, 6.696123e-003, 1.100117e-003, -4.755835e-002, 6.612022e-002, 2.171248e-002, 2.171248e-002, 6.612022e-002, -5.448414e-002, 1.068983e-004, 9.376438e-003, -1.551843e-002, -1.237940e-002, -2.874003e-002, -7.140179e-003, -7.054258e-003, -4.806772e-003, -9.599984e-003, -9.181825e-003, -6.077593e-004, 4.067130e-002, 4.067130e-002, -6.077593e-004, 8.472052e-002, -8.506429e-003, -3.476101e-002, -2.114942e-002, -3.534517e-002, 9.185790e-002, 1.212217e-002, -1.672607e-002, -1.357904e-002, -1.505993e-002, 2.522527e-002, -2.013894e-002, 5.266184e-003, 5.266184e-003, -2.013894e-002, 5.003184e-002, 1.881017e-002, 1.771004e-003, -2.015064e-003, 5.639529e-002, -4.260687e-002, 7.883192e-003, 7.106694e-004, 3.277084e-003, -1.077418e-002, 8.742952e-002, 7.636470e-003, -1.694264e-002, -1.694264e-002, 7.636470e-003, 7.792785e-002, 6.396289e-002, 1.764827e-002, 8.263635e-003, 2.744483e-002, -4.548232e-002, -2.067423e-003, -2.868910e-003, 1.429777e-003, 8.569343e-003, -1.757915e-003, -8.126328e-003, 2.591801e-002, 2.591801e-002, -8.126328e-003, 3.262143e-002, -5.062942e-002, 1.116547e-002, 2.072536e-003, 1.894281e-002, 1.334247e-002, -8.488501e-003, -5.528313e-003, -4.336259e-003, -1.385754e-002},
{5.750569e-004, 6.957436e-003, 1.110675e-002, -4.159875e-004, -3.344520e-003, 5.279701e-003, 1.489191e-003, -5.950553e-003, 1.446641e-004, -1.320374e-002, 5.920248e-003, 3.973949e-002, 5.920248e-003, -1.320374e-002, 1.446641e-004, -5.950553e-003, 1.489191e-003, 5.279701e-003, -3.344520e-003, -4.159875e-004, 1.110675e-002, 6.957436e-003, 2.079493e-002, 6.147367e-003, 4.689136e-003, -3.945613e-002, -2.595543e-002, 2.051169e-002, -8.712547e-003, -1.241436e-002, 3.598880e-002, -3.388343e-002, -2.654627e-002, -2.031233e-002, 3.627757e-002, -1.907508e-003, -4.633673e-002, -4.219137e-002, 1.959833e-002, 1.892029e-002, -2.112260e-002, -1.707653e-002, -6.955569e-003, 9.616338e-003, 1.027125e-002, 6.757996e-003, 3.093575e-002, 1.511790e-003, 2.402293e-002, 3.506794e-002, 4.260928e-002, -3.814364e-002, 2.623234e-002, -1.385610e-002, 4.779380e-002, -1.494187e-003, -7.286910e-003, 7.002003e-002, -5.616514e-003, -1.693404e-002, -8.643627e-003, -4.207831e-004, -6.995144e-003, 3.214802e-003, -1.028842e-002, -7.887967e-003, -3.399186e-002, -2.750264e-002, 1.109922e-002, 9.790592e-003, 1.681890e-003, 2.075328e-002, 3.327689e-002, 1.832750e-002, -4.186232e-003, -4.235535e-002, 9.585216e-004, -2.428239e-003, -1.557703e-002, 9.206732e-003, 7.786129e-002, 2.455620e-002, 4.217832e-002, 1.465190e-002, -7.083578e-003, -9.945455e-003, 1.843028e-003, 2.046397e-002, 2.380639e-002, 1.113552e-003, 1.328380e-002, 1.887067e-002, -4.865245e-002, 2.156193e-002, 5.903259e-003, -3.547687e-002, -

© ISO/IEC 2004 — All rights reserved


Copyright International Organization for Standardization
Provided by IHS under license with ISO
No reproduction or networking permitted without license from IHS
Not for Resale

7.013692e-002, -3.134893e-002, -1.037981e-002, -2.881909e-002, -5.357487e-002, -2.423179e-002, 1.334616e-002, -5.669736e-003, 4.585713e-003, -9.013511e-003, -3.722147e-002, -4.006169e-002, -3.073429e-002, 5.057721e-002, -1.881071e-002, 1.416136e-002, -1.625591e-002, -2.744198e-002, 4.204977e-002, 3.475136e-002, 3.779694e-003, 1.848781e-002, -7.023452e-002, -4.019369e-002, -3.411216e-002, -5.065299e-003, 7.876882e-003, -6.197820e-002, -2.501294e-002, 1.225766e-002, -2.949151e-002, -4.125384e-002, -2.904421e-002, 4.692943e-002, -2.281843e-002, -5.402804e-002, -1.021463e-002, 1.437250e-002, 3.564458e-002, 5.926730e-003, -1.031401e-002, 3.564658e-002, -2.277297e-002, -4.742125e-003, -8.943919e-003, -5.323385e-002, -4.635674e-002, 4.378930e-003, 2.375444e-002, 3.057659e-002, -1.552467e-002, -1.172820e-002, 6.137947e-003, -3.363582e-002, -3.868015e-002, 2.467847e-003, 1.315583e-002, -7.924471e-002, -8.253899e-002, 4.159152e-002, 3.346851e-002, -2.305130e-002, -5.590151e-003, -3.686046e-003, 2.361183e-002, 5.751671e-002, 1.357452e-002, -2.379118e-003, 4.162610e-003, 1.785071e-002, -6.153304e-003, -6.338923e-004, -3.071753e-002, -3.308336e-003, 4.981574e-002, -1.836385e-002, -1.413931e-002, -3.103159e-002, 1.031242e-002, 5.457144e-003, 1.054136e-001, -5.522734e-002, 6.624882e-002, 2.023687e-002, 1.479033e-002, -2.628631e-002, -6.886975e-003, 3.179038e-003, -2.529206e-002, -5.634755e-003, 1.115931e-002, -7.277072e-003, -1.293891e-002, 1.378906e-002, 5.288667e-003, -3.821246e-002, 2.587953e-002, 7.899825e-003, 9.593611e-003, 3.327553e-002, 1.064850e-002, 4.557435e-002, 7.213291e-003, -1.075580e-001, -6.024687e-002, 1.078803e-002, 2.709280e-003, 6.783062e-002, 4.739234e-002, 4.033206e-003, -2.637548e-002, -1.825370e-003, -2.344926e-002, -3.284301e-003, 1.093773e-003, 1.049344e-002, -1.501178e-002, -3.911539e-003, 2.397273e-002, 6.847438e-003, 2.576112e-002, 4.034045e-003, -1.500849e-002, 1.407934e-002, 7.013214e-003, -5.805029e-002, -1.522857e-002, 3.478712e-002, -1.026739e-001, -9.313191e-002, -1.541344e-002, 7.387390e-004, 2.362827e-002, -1.250237e-002, -5.586057e-003, 2.013660e-002, 9.385680e-003, 2.010292e-002, 2.198299e-002, -1.618890e-002, -1.831712e-002, 2.089674e-002, 5.863774e-002, -4.110542e-002, -3.303223e-002, 4.821537e-002, -2.139545e-002, 6.044535e-002, -5.477628e-003, -8.445078e-003, 9.806111e-002, 6.195449e-002, 5.456458e-002, 2.385993e-002, -7.615296e-003, -4.625655e-003, 3.263370e-003, 3.030692e-003, 3.323607e-003, 5.592431e-003, -5.481682e-003, 1.730549e-002, 1.039924e-002, 3.035750e-003, 4.136589e-002, 5.401046e-002, 6.360550e-003, -2.162566e-002, -1.623019e-003, 2.085460e-002, -2.770325e-004, 2.668646e-002, 2.859611e-002, -2.970770e-002, 1.279031e-003, -4.686865e-003, -1.104446e-002, 3.275279e-003, 2.151674e-003, 3.487373e-003, 5.259759e-003, 8.683101e-003, -7.755630e-004, 2.513597e-003, 3.770239e-002, 1.577582e-002, 2.585144e-002, -5.342335e-002, -6.841302e-003, -4.670040e-002, -2.981164e-002, 5.407164e-002, -2.385744e-002, -1.974417e-002, 2.596976e-002, 1.621853e-002, 4.844564e-003, -1.305844e-002, -8.420394e-003, -9.113183e-003, -1.536570e-004, 4.819166e-003, -4.184083e-003, -7.702556e-004, -1.350207e-002, -4.751991e-003, 7.555009e-003, -1.122562e-002, 2.312185e-003, -1.597606e-003, -1.227854e-002, -5.409461e-003, -2.442634e-002, 2.360041e-003, 1.556648e-003, -1.585244e-002, 1.366573e-002, -1.750527e-002, -1.750527e-002, 1.366573e-002, -1.585244e-002, 1.556648e-003, 2.360041e-003, 5.829539e-003, -5.057058e-002, -9.764270e-002, -1.800520e-002, 5.115073e-002, 4.318238e-002, 1.470225e-002, 1.661311e-002, 3.548257e-002, -4.004367e-003, 7.937529e-002, 4.346764e-002, -2.367456e-002, 1.770219e-002, -9.840656e-003, -4.804125e-002, 3.009069e-003, 1.748857e-002, 1.894793e-002, 5.174022e-002, 6.749586e-002, 7.742822e-002, 9.759682e-002, 2.674338e-002, 6.490568e-002, 1.812623e-002, 1.506818e-003, -1.396169e-002, 1.054042e-002, 6.157270e-003, 1.711914e-002, 5.417379e-002, -8.004484e-002, -1.062193e-001, 7.002581e-002, 1.978124e-002, 1.545291e-002, -1.873396e-002, -1.564728e-002, -1.839651e-003, 2.755198e-003, 1.277987e-002, 2.947327e-002, 8.752905e-003, -6.392084e-002, 4.131940e-002, -1.750591e-003, 1.113825e-002, 4.038072e-003, 1.572998e-003, -1.613004e-004, 2.536425e-003, 5.142012e-003, 6.215532e-003, 4.685767e-002, -6.948986e-002, -2.618159e-002, 2.539662e-002, 2.862027e-003, 4.568018e-003, -1.052832e-003, -1.084924e-003, 7.129161e-003, 4.794005e-003, 1.864757e-002, -1.701282e-002, 1.067431e-002, 9.775370e-003, -4.781425e-002, 4.093928e-004, -2.447921e-002, -3.140641e-002, -3.140641e-002, -2.447921e-002, 4.093928e-004, -4.781425e-002, 9.775370e-003, -9.404658e-003, -5.518966e-002, 9.367495e-002, -5.674065e-002, -7.817696e-002, -2.554055e-002, 3.825570e-002, 6.249464e-002, 1.080871e-001, 3.014182e-002, -3.866885e-002, -6.119105e-002, -1.195444e-001, 9.606298e-002, -4.240744e-004, -3.162587e-002, -3.816460e-002, -6.698658e-002, -4.816146e-002, -5.215739e-002, 1.968231e-002, -8.105702e-002, 1.747288e-003, -1.327744e-001, 2.651835e-002, 2.066295e-002, 6.081692e-003, 2.261645e-004, 4.756209e-005, -1.258193e-002, 3.633882e-003, 3.703754e-002, -1.040836e-001, -2.202247e-002, 3.491822e-002, 3.026712e-003, 1.795340e-002, -1.883655e-003, -4.796306e-003, -4.101256e-004, 2.705993e-003, -1.574454e-003, 2.466405e-004, 1.102905e-002, 3.100755e-002, 2.861054e-002, 1.120778e-002, -4.213971e-005, -5.112754e-003, -4.784344e-003, 4.374463e-003, -5.069012e-003, -6.393162e-003, 1.075712e-002, 9.167667e-003, -3.656087e-002, -1.119502e-002, 2.617592e-002, 1.265722e-004, 3.645094e-004, -4.550469e-003, -4.598116e-003, -1.836087e-003, 5.417106e-003, 3.465084e-002, -3.339172e-002, 1.185279e-002, -1.679407e-002, -2.346097e-002, -7.026091e-003, -2.405118e-002, 3.434685e-002, 3.434685e-002, -2.405118e-002, -7.026091e-003, -2.346097e-002, -1.679407e-002, 2.286065e-002, 1.858378e-003, -1.262830e-002, 7.026893e-003, 2.945188e-002, -8.699460e-003, -2.402514e-002, -


© ISO/IEC 2004 — All rights reserved

Copyright International Organization for Standardization
Provided by IHS under license with ISO
No reproduction or networking permitted without license from IHS
Not for Resale

2.638423e-002, -2.489274e-002, 5.671018e-002, 2.786709e-002, 1.968233e-002, -5.887151e-002, -5.247914e-002, -1.803562e-002, 1.352551e-002, 1.182714e-003, 8.114258e-003, 6.280614e-003, 2.347923e-002, 8.973098e-002, -3.563883e-002, 3.104826e-002, 5.493294e-002, 4.538730e-002, 3.138129e-002, 1.687640e-002, 7.050875e-003, 2.047979e-002, 1.845618e-002, 1.420990e-002, 1.338728e-001, 8.391687e-002, -2.417017e-002, -5.668310e-002, -2.362801e-002, -4.982693e-003, 1.645975e-002, 1.279878e-002, 9.032189e-003, 1.322825e-004, 1.737475e-002, 4.625065e-002, 1.542977e-002, -1.736648e-002, -4.780576e-002, -6.213431e-002, -3.453363e-002, -1.968168e-003, 2.248191e-003, 7.107389e-003, 1.436225e-002, 1.340148e-002, 2.546260e-002, 1.048826e-002, -1.318017e-004, 1.974584e-002, 1.791088e-002, -2.809408e-002, -8.034947e-003, -4.557677e-003, 8.937392e-003, 9.654334e-003, 1.732301e-002, 2.429809e-002, 1.247102e-002, 2.474296e-003, -1.672465e-002, -2.505470e-002, 2.376314e-003, 2.950247e-002, 4.920856e-003, 4.920856e-003, 2.950247e-002, 2.376314e-003, -2.505470e-002, -1.672465e-002, -5.905170e-002, -1.693367e-002, -5.726054e-003, 7.127135e-002, 2.120004e-003, -2.660524e-003, -3.935880e-002, -4.317618e-002, -1.127855e-001, -4.090684e-002, 1.009537e-002, -1.871319e-003, 2.927506e-002, -2.400773e-002, 1.061790e-002, 2.156525e-002, -1.191383e-003, -5.661021e-003, -2.805049e-003, -2.651763e-002, -9.672784e-002, -1.475416e-003, 1.261526e-001, 6.889297e-002, 3.105183e-002, -3.151878e-003, 1.507044e-003, 2.330153e-003, 3.620995e-003, 2.202696e-003, -4.455056e-003, -1.906166e-002, 4.056402e-002, -4.358241e-002, 1.398550e-002, 6.777909e-003, 1.346046e-002, 5.009428e-003, 7.765837e-003, -2.123735e-003, -1.916375e-003, -2.052204e-002, -1.263458e-002, -5.287003e-002, -3.055281e-002, -3.223003e-002, -1.361736e-004, 2.162703e-003, 5.060391e-003, -8.049674e-003, 9.302118e-003, -1.181980e-002, -2.915369e-002, -1.346669e-002, -3.331346e-002, -1.670914e-002, 2.468109e-002, 2.676521e-002, 1.415786e-002, 1.777164e-003, 7.940276e-003, 2.401011e-003, -1.459952e-002, -8.483117e-003, -5.311473e-003, 5.177594e-003, 4.291261e-002, -1.150312e-002, 2.476794e-002, 2.476794e-002, -1.150312e-002, -6.215429e-002, 8.195010e-002, 4.023809e-002, 2.519714e-002, 4.920090e-002, -3.603584e-002, 2.944447e-002, -1.707214e-003, 8.273966e-003, 2.081044e-002, 4.824773e-002, -1.083678e-001, -4.160618e-002, -4.160618e-002, -1.083678e-001, 2.393790e-001, -3.224262e-002, -8.994177e-003, 3.143836e-003, 1.462149e-002, 2.669170e-002, -1.513756e-003, -5.337003e-003, 2.121373e-003, 4.531493e-003, -4.925460e-003, 5.720562e-003, 1.186072e-002, 1.186072e-002, 5.720562e-003, 6.237099e-002, 3.644723e-002, 1.378911e-002, 1.828334e-002, 3.284317e-002, 3.634052e-002, 6.445244e-003, 2.864463e-003, 1.263886e-002, 1.656930e-002, 1.344194e-003, 6.797838e-002, 5.214890e-002, 5.214890e-002, 6.797838e-002, 8.050821e-002, -1.713642e-003, -1.301638e-002, -5.245718e-003, 3.288222e-002, 3.319851e-002, 1.619217e-002, -2.668695e-003, -1.643287e-003, -1.400116e-002, -1.978078e-002, 2.195539e-003, 1.475126e-003, 1.475126e-003, 2.195539e-003, -1.217259e-002, -2.919084e-002, -1.161381e-002, -7.072654e-003, 9.573417e-003, -3.043504e-002, -2.720390e-002, -6.478138e-003, -4.403698e-003, -1.411538e-003, -9.580590e-002, 2.947765e-002, 2.110476e-002, 2.110476e-002, 2.947765e-002, 1.245946e-001, -7.950412e-003, -5.168927e-003, 5.953304e-003, -4.864084e-002, -1.041596e-002, 5.233910e-003, 2.030746e-003, 6.186989e-003, 1.793529e-002, -2.365897e-002, 2.599567e-002, -2.210691e-002, -2.210691e-002, 2.599567e-002, -2.813981e-002, -1.341691e-002, -9.768743e-003, -7.284728e-003, -1.085192e-002, -3.144057e-002, 1.513416e-002, 6.054202e-003, -4.834849e-003, 2.267485e-003, 3.791455e-002, 7.901447e-002, 3.014687e-003, 3.014687e-003, 7.901447e-002, -1.126709e-001, -4.040597e-002, -5.031464e-002, -1.813669e-002, -5.863713e-002, -3.246131e-002, -5.122820e-003, -3.021235e-003, -1.013875e-002, -2.107971e-002, 2.960611e-002, 4.427902e-002, -8.821750e-002, -8.821750e-002, 4.427902e-002, -1.129788e-001, -3.796816e-002, -1.702149e-002, -9.432328e-003, -4.078461e-002, -3.916483e-002, -1.262873e-002, -4.574412e-003, -8.579924e-003, -5.252534e-003, -9.345788e-003, -6.798818e-002, 2.278309e-003, 2.278309e-003, -6.798818e-002, 5.044464e-002, 9.382087e-003, 1.257537e-002, 9.778592e-003, 3.578494e-002, 3.861891e-003, -1.521122e-002, 2.029335e-002, 6.384910e-003, 1.582129e-002, 2.887579e-002, -6.313915e-002, -3.320116e-002, -3.320116e-002, -6.313915e-002, 2.296237e-002, 2.140562e-002, -4.630686e-003, 1.173553e-003, 7.380908e-003, -1.470005e-002, -1.907430e-003, 2.862876e-003, 4.793437e-004, -2.468765e-002, -5.974834e-002, 7.476794e-003, 1.985896e-002, 1.985896e-002, 7.476794e-003, -4.116330e-002, 1.339035e-002, 1.630431e-002, -9.016446e-003, -1.718820e-002, -1.765692e-002, -2.754058e-003, -1.657074e-003, -5.592887e-003, -1.347787e-002, -3.629053e-002, -1.970528e-002, 1.075537e-002, 1.075537e-002, -1.970528e-002, 1.359085e-002, 7.317182e-004, 2.384570e-002, 1.405612e-002, 6.706137e-003, -1.180657e-003, -1.662495e-002, 1.549742e-002, 1.297250e-002, 1.238585e-002, 2.788300e-002, -4.232070e-002, -2.194460e-002, -2.194460e-002, -4.232070e-002, -8.419941e-002, -2.224560e-003, 2.951202e-003, 1.182276e-002, 4.435504e-002, -1.167741e-002, 7.601866e-003, 7.424201e-004, 8.192903e-003, 2.477834e-002, 4.033545e-002, -7.262398e-002, -3.587499e-002, -3.587499e-002, -7.262398e-002, -3.710074e-002, -1.027406e-002, -2.275951e-003, -7.641872e-004, -6.732307e-003, -1.184886e-002, -6.520737e-003, -3.484081e-003, -4.999408e-003, -1.238128e-004, -6.988603e-003, 2.735366e-002, 1.027990e-002, 1.027990e-002, 2.735366e-002, 9.063932e-003, 8.328948e-003, 8.630716e-004, 1.734323e-003, -3.213058e-002, -1.536036e-002, 2.604553e-003, 6.041035e-003, -3.013110e-003, -1.708434e-002},

© ISO/IEC 2004 — All rights reserved


Copyright International Organization for Standardization
Provided by IHS under license with ISO
No reproduction or networking permitted without license from IHS
Not for Resale

{-4.906987e-004, -4.763325e-005, 1.764735e-002, -2.559170e-002, -1.450317e-002, 1.294088e-003, -1.446326e-002, 1.229437e-002, 9.776755e-003, -1.234168e-002, -6.997503e-003, 6.914527e-002, -6.997503e-003, -1.234168e-002, 9.776755e-003, 1.229437e-002, -1.446326e-002, 1.294088e-003, -1.450317e-002, -2.559170e-002, 1.764735e-002, -4.763325e-005, -9.122804e-003, 1.535720e-003, -2.586473e-002, -2.388008e-002, -2.156100e-002, 3.368855e-003, -9.612882e-003, -3.360099e-002, -5.992791e-002, -1.636284e-002, 3.848899e-002, 3.601471e-002, 3.058187e-002, -2.440510e-002, 4.759385e-003, 8.568891e-003, -3.229819e-002, 1.223227e-002, -6.212176e-003, 2.700612e-002, -2.402493e-002, 1.143467e-002, 1.560222e-002, 4.579208e-003, 1.548531e-002, 9.703698e-003, 1.361408e-002, 4.601745e-002, 4.183520e-003, 7.496214e-003, 3.426761e-002, 2.661674e-003, 1.180304e-002, 9.624319e-003, -3.361123e-003, -3.719881e-002, 6.265872e-003, -1.300045e-002, -1.747732e-002, 1.153708e-002, -4.733437e-003, 1.201375e-003, 2.024442e-002, 4.239151e-003, 2.204765e-002, -3.151747e-003, 4.875872e-003, 3.729570e-002, -1.878114e-002, -6.817755e-002, -2.612782e-002, 8.574072e-003, 1.614447e-002, 2.024240e-002, 1.691066e-002, -1.110725e-002, -3.725379e-002, -1.386971e-002, -2.782704e-002, -4.974611e-002, -3.918414e-002, 1.199832e-002, -5.088345e-002, -2.386902e-002, -1.222656e-002, -7.508278e-003, 2.079803e-003, 1.232318e-002, 1.906855e-002, 4.000439e-002, 6.981972e-002, -4.502172e-002, -3.220098e-002, 2.994682e-003, -1.549285e-003, -3.711129e-003, 5.274442e-002, -1.078008e-002, -3.851620e-002, 2.694551e-002, -1.653361e-002, -4.376420e-002, -4.958131e-003, 7.133688e-002, -1.612664e-002, 4.880729e-002, 3.784791e-002, 1.698953e-002, 4.899357e-002, -3.617456e-002, 3.687745e-003, 3.793212e-002, 3.834752e-002, -8.412939e-003, -6.500021e-002, -5.908436e-002, 4.961992e-002, 3.856807e-002, 1.865685e-002, 1.409154e-002, 3.751733e-002, 2.729053e-002, 2.134937e-002, 1.644312e-002, 3.809143e-002, 1.345427e-002, -1.624348e-002, 1.757002e-002, -1.854021e-003, -1.048923e-002, -3.350492e-003, 1.832565e-002, -6.392322e-003, 2.062344e-002, -2.655461e-002, -5.040616e-003, -5.743445e-002, 2.209009e-002, -7.999673e-002, 2.355375e-002, 6.407986e-002, -1.960346e-002, -1.525616e-002, 3.595340e-002, 2.922363e-002, 6.999606e-002, -1.531028e-002, -9.364361e-002, -2.588039e-002, -7.937463e-003, -4.448998e-002, -1.731493e-002, -1.016605e-002, -8.704188e-003, 1.540795e-002, -6.696501e-002, -3.072589e-002, -4.671016e-002, -6.927028e-002, 3.282773e-003, 3.271509e-002, 1.561338e-002, -1.161001e-002, 4.653126e-002, 6.389833e-002, 9.335914e-002, 9.499291e-002, -4.424651e-003, -6.230164e-002, -6.142987e-002, -1.462645e-002, 2.033887e-003, -4.165173e-002, 2.001358e-002, -1.405902e-002, 7.468335e-003, 1.814412e-003, -2.097570e-003, 6.285936e-002, -4.315201e-002, 3.550409e-002, -8.475971e-002, -3.383421e-002, -1.747955e-002, -2.258872e-002, 5.691364e-002, 5.823615e-002, 5.176659e-002, -8.260546e-004, -1.237208e-002, -1.342213e-002, -2.274969e-002, -8.096538e-003, -4.883341e-002, 5.625305e-002, 2.949600e-002, -1.774456e-002, -8.196099e-002, 4.390760e-002, -2.938093e-002, 3.338748e-002, 9.680456e-003, -5.602384e-002, -3.872817e-003, 3.283170e-002, -9.885386e-003, -6.115090e-003, 3.002567e-002, 3.406843e-002, 3.424367e-002, 1.233384e-003, -1.021811e-002, -4.677461e-002, -7.952305e-002, -5.304250e-002, -3.024185e-002, 4.139291e-002, -1.096674e-003, -6.529788e-002, 4.291343e-002, -1.519898e-002, -3.011879e-002, -1.938081e-004, -4.865867e-003, -3.105037e-002, -6.226886e-003, 2.419984e-002, 3.469804e-002, 3.087356e-002, 2.352789e-002, 2.043571e-002, 1.364078e-003, -1.142912e-002, -5.443205e-004, -2.725302e-002, -3.280776e-003, 2.177415e-002, 1.199353e-003, -4.644324e-002, -4.178969e-002, -3.333520e-003, -1.067986e-002, -1.368043e-002, 3.613487e-002, 1.825871e-002, -6.359675e-002, -2.572004e-002, 7.712608e-003, 9.743401e-003, 1.725557e-002, 2.069077e-002, 2.267764e-002, 3.280148e-004, 6.486049e-003, -7.953351e-003, -2.078049e-002, -3.005249e-002, -5.114154e-002, -2.371176e-002, 1.062253e-001, 1.094027e-002, -7.969249e-003, -2.630912e-002, 5.431813e-003, 1.001432e-001, 4.497568e-002, 3.435480e-002, 6.268336e-003, -1.584204e-002, 1.926423e-003, 3.227572e-003, -7.190607e-003, -4.508233e-003, 3.488558e-003, -1.177666e-003, -1.339977e-002, -6.560180e-003, -2.033662e-002, -1.080168e-002, -2.600905e-002, -9.309635e-003, -8.933462e-003, 3.150048e-002, -2.222131e-002, -2.060891e-002, -2.659241e-002, 6.959989e-002, 9.505262e-003, 2.187806e-002, -3.594071e-002, -1.701153e-002, -4.518363e-003, 1.420494e-003, 8.438699e-003, 2.295855e-002, -5.732879e-004, 4.426392e-003, 7.126451e-003, 6.792444e-003, -6.804906e-003, -5.896814e-003, -4.144520e-003, 3.600028e-003, -2.858474e-002, -6.534402e-002, -6.438280e-002, 1.479293e-002, -1.211925e-002, -4.256627e-004, -1.890168e-002, 1.152151e-002, 4.566438e-003, 4.566438e-003, 1.152151e-002, -1.890168e-002, -4.256627e-004, -1.211925e-002, -5.302687e-002, 4.490657e-002, 1.261543e-001, 8.357771e-002, 2.999500e-002, -8.196456e-003, 2.183563e-002, -9.488328e-003, -9.235045e-002, -7.814961e-002, -1.981572e-002, 3.008972e-002, -9.228262e-002, -4.178017e-002, -7.339709e-002, 4.014801e-002, 4.276119e-002, -1.135627e-002, 1.474810e-002, -9.017073e-003, 1.014629e-001, -7.075781e-002, -1.439522e-001, 8.929229e-002, 5.563270e-004, -1.851862e-002, 2.010126e-002, 1.537677e-002, -3.268482e-003, -1.606670e-002, -2.569046e-002, -4.261602e-002, 9.194251e-002, 7.999978e-002, 8.304490e-002, 2.537657e-002, 1.406193e-002, -1.373929e-003, 1.450746e-003, 2.312220e-003, -1.462667e-002, -2.672652e-002, -5.296182e-002, 6.092125e-002, 1.130644e-001, 5.289169e-002, -2.285268e-002, -8.971978e-003, 1.558922e-002, 1.979816e-002, 4.032265e-003, -8.575126e-003, -9.393896e-003, -1.036393e-002, 1.058504e-002, 4.735468e-002, 6.162818e-002, 1.840670e-002, 5.695674e-004, 5.685578e-003, 4.666539e-003, 4.097544e-004, -1.861184e-003, 2.556131e-003, -9.862754e-003,


© ISO/IEC 2004 — All rights reserved

Copyright International Organization for Standardization
Provided by IHS under license with ISO
No reproduction or networking permitted without license from IHS
Not for Resale

2.210172e-002, -7.369478e-003, 9.340928e-003, -2.128392e-002, -7.145785e-002, 2.072641e-002, -1.687841e-002, -1.687841e-002, 2.072641e-002, -7.145785e-002, -2.128392e-002, 9.340928e-003, -4.918546e-002, 7.308928e-002, 1.150928e-001, -5.986662e-003, 2.508340e-003, -9.835759e-003, -8.068701e-002, -7.782719e-002, -8.906495e-003, 1.126574e-001, -2.694774e-002, 2.014041e-002, -6.243122e-002, 1.738786e-002, 3.275750e-002, -1.473251e-002, -9.053609e-003, 2.377923e-002, 3.872803e-002, 9.615443e-002, -6.513309e-002, 1.424632e-003, -4.542787e-003, 6.356722e-002, -7.959117e-002, -7.898284e-003, -1.153867e-002, -9.642926e-003, 1.496558e-002, 5.093195e-002, 1.021385e-002, -1.190333e-001, -5.553662e-002, 1.671768e-001, -1.798245e-002, -3.397372e-002, -3.848673e-002, -7.186477e-003, -4.997373e-004, 4.395334e-002, 1.266279e-002, -3.448219e-002, -5.807501e-002, 1.698905e-002, 1.265581e-001, -5.052404e-002, 5.503216e-003, -2.036663e-002, -4.997277e-003, 1.291143e-003, 1.968889e-002, -1.466171e-003, -4.022512e-002, -1.516414e-002, -1.432769e-002, 9.449966e-002, -2.920624e-003, -1.789307e-002, -8.767764e-003, -2.533899e-003, -1.083365e-003, -3.499803e-003, -1.177339e-002, -2.409699e-002, -9.402517e-003, -1.925337e-002, -8.188740e-003, -2.010962e-002, 8.249288e-003, 1.474120e-002, -2.221274e-002, 4.002546e-002, 4.002546e-002, -2.221274e-002, 1.474120e-002, 8.249288e-003, -2.010962e-002, -5.211265e-003, 1.004897e-001, -3.798419e-002, -5.243044e-002, -1.782697e-002, -7.179404e-003, 4.535010e-002, 3.443876e-002, -4.546611e-002, -1.885099e-002, 2.899640e-003, -1.732958e-002, -1.325385e-002, 9.503163e-002, 3.638147e-002, 6.459306e-003, 1.758825e-003, -1.665700e-002, -5.093882e-003, -6.166330e-002, -2.416028e-002, 1.769682e-003, 3.355235e-002, 1.441877e-003, -1.240583e-002, -2.754242e-002, -6.097714e-003, -4.708548e-003, -9.516457e-003, -1.024845e-002, 1.849635e-002, -3.955418e-002, 4.812147e-003, -4.605488e-002, 8.005270e-002, 1.571781e-002, 1.855404e-003, 1.271271e-002, 5.717118e-003, 3.199538e-002, 1.908731e-002, 4.993941e-003, 2.781524e-002, 6.354403e-002, -4.120812e-002, 1.955606e-002, 1.345185e-002, 1.878360e-002, 1.345732e-002, 1.884645e-002, 1.062451e-002, 4.385568e-003, 4.921473e-003, -2.054892e-003, 1.381903e-002, -1.016603e-002, 3.454784e-002, 1.739770e-002, -2.952046e-003, -3.948564e-003, 6.787610e-003, 4.936169e-003, -4.264382e-003, -5.362614e-003, -1.105799e-002, -1.012812e-002, 2.745944e-004, -9.149040e-003, 4.166198e-002, 4.278796e-002, 6.288673e-003, -5.998269e-003, -5.998269e-003, 6.288673e-003, 4.278796e-002, 4.166198e-002, -9.149040e-003, -4.281808e-002, -6.720870e-003, 1.839009e-003, -1.104385e-001, 1.017158e-001, 4.824024e-002, 2.619168e-002, 2.989309e-002, 5.085449e-003, -4.189225e-002, 1.079022e-001, 7.299013e-002, 4.979647e-002, -1.247008e-002, -8.677787e-002, -5.020299e-002, 9.666948e-004, -2.451909e-002, -1.833772e-002, -2.770449e-002, -2.270647e-002, 1.042389e-001, 2.350128e-002, 4.324156e-002, -1.060016e-001, -2.927965e-002, -3.323424e-002, -1.643270e-003, -7.749761e-003, -1.187148e-002, -6.020495e-002, 2.291817e-003, 2.290252e-002, -2.261720e-002, -6.903115e-003, 3.071779e-002, 1.118940e-002, -9.972720e-003, -5.466700e-003, 1.282560e-002, -2.606849e-003, 7.047599e-003, 3.651181e-002, 1.028730e-001, -6.873518e-002, 2.108932e-002, -1.118972e-002, -4.171131e-003, -4.328572e-004, 4.713375e-003, 6.529588e-003, 3.269113e-003, 1.733685e-002, 2.518879e-002, -8.919985e-003, -2.902905e-002, 7.700413e-003, 7.955444e-003, -1.109431e-002, -7.807182e-003, -1.203314e-003, -2.653201e-003, -4.263319e-003, -5.212890e-004, 1.080407e-002, 2.295707e-002, -6.896770e-002, -2.791237e-002, -5.882273e-003, -5.882273e-003, -2.791237e-002, 7.060000e-002, -1.705854e-002, -2.954561e-002, -4.580005e-003, -1.403153e-002, 4.144794e-002, 5.123781e-003, 6.952007e-003, 5.864169e-004, -5.762707e-003, 2.983813e-002, 1.496349e-002, 3.311007e-003, 3.311007e-003, 1.496349e-002, -1.104683e-001, 5.913774e-003, 1.611855e-003, -2.643170e-003, -6.130364e-003, -1.401114e-003, 9.999616e-003, 8.356311e-004, -1.938787e-003, -6.421323e-003, -2.541232e-002, -3.585279e-002, -2.155407e-002, -2.155407e-002, -3.585279e-002, 8.771043e-003, -9.771484e-003, -6.388345e-003, -6.077998e-003, -2.057583e-002, 2.204052e-002, -2.717741e-003, -3.475412e-004, -5.428566e-003, -2.566428e-002, -4.764563e-003, 3.240304e-002, -3.152215e-002, -3.152215e-002, 3.240304e-002, 6.676468e-002, -2.096715e-002, 1.038803e-002, -6.006903e-003, 5.224563e-002, 2.848372e-002, -7.429917e-003, 1.841778e-003, 2.906635e-002, -4.150847e-002, 4.726158e-002, 2.093418e-002, 1.747092e-002, 1.747092e-002, 2.093418e-002, -6.061895e-002, -1.631020e-002, 2.397051e-002, -2.431702e-002, -1.618924e-002, -2.119361e-002, 9.987505e-003, 2.613833e-003, -4.848998e-003, -3.235812e-003, 6.660912e-003, 4.137863e-002, -6.783870e-003, -6.783870e-003, 4.137863e-002, -2.714377e-002, 5.557774e-003, 8.935704e-003, -7.447067e-003, 3.200040e-002, 4.432808e-002, 3.235356e-003, -1.213299e-004, -7.429676e-003, -1.393696e-002, -1.474180e-002, -3.587490e-002, -2.656857e-002, -2.656857e-002, -3.587490e-002, 2.684268e-003, 3.179128e-002, -7.670352e-003, -3.772934e-003, -4.098145e-003, 3.794738e-002, -2.326819e-002, -4.588997e-003, -2.374898e-003, -1.104634e-002, 3.754920e-002, 3.579436e-003, 2.240779e-002, 2.240779e-002, 3.579436e-003, -1.431626e-002, -1.199226e-003, 5.815887e-003, 4.623764e-003, 1.813592e-002, 1.534125e-003, 4.838963e-003, -1.013850e-003, 1.914176e-002, 4.049929e-003, -3.523153e-004, 5.890022e-002, -1.593623e-003, -1.593623e-003, 5.890022e-002, -5.744093e-002, -2.183653e-002, 1.439472e-004, -9.169826e-003, -5.118801e-002, -1.308637e-002, 2.583225e-003, -2.502971e-003, 2.810430e-003, 1.865667e-003, -5.188047e-002, 4.300090e-002, 1.638094e-002, 1.638094e-002, 4.300090e-002, -7.837901e-003, 5.931181e-003, 6.144873e-003, -5.754232e-004, -1.285874e-002, 3.324541e-002, 5.494948e-003, 6.861124e-003, -1.272322e-003, 1.202318e-002, 4.435516e-003, 1.808691e-002,

© ISO/IEC 2004 — All rights reserved


Copyright International Organization for Standardization
Provided by IHS under license with ISO
No reproduction or networking permitted without license from IHS
Not for Resale

7.008320e-003, 7.008320e-003, 1.808691e-002, -1.362477e-002, -1.773222e-002, -9.397494e-003, -1.223603e-003, 3.278913e-003, 2.612067e-002, -4.753075e-003, 1.790231e-003, 1.004285e-002, 1.079627e-002, 2.240046e-002, 2.751241e-002, -1.975744e-003, -1.975744e-003, 2.751241e-002, -3.885521e-002, -5.667011e-002, -3.721522e-003, 1.211129e-002, -1.738414e-002, -6.593862e-003, -3.803787e-003, -3.219231e-003, 6.755323e-003, -7.141931e-003, 1.880934e-002, -1.321818e-002, 4.265690e-003, 4.265690e-003, -1.321818e-002, 8.840828e-003, 3.033575e-003, -8.038435e-003, -5.136049e-003, -9.802174e-004, -2.365355e-002, -4.362870e-003, 8.215576e-005, 5.334660e-003, -2.563759e-003, 2.523471e-002, 4.636231e-002, 2.595834e-002, 2.595834e-002, 4.636231e-002, -4.278391e-002, -8.684803e-003, -3.098934e-003, -6.174685e-003, -2.574548e-002, -1.017715e-002, 1.083562e-003, 3.991860e-003, 5.778884e-003, 5.389174e-003, 2.542062e-002, 3.159162e-002, 2.224750e-002, 2.224750e-002, 3.159162e-002, 1.087270e-002, -2.305905e-002, -1.380799e-002, -6.729514e-003, -1.579302e-003, -8.162569e-003, -1.421265e-002, -7.150590e-003, 1.231332e-005, 6.848193e-003, -5.198200e-002, -2.166982e-002, 3.277249e-002, 3.277249e-002, -2.166982e-002, -2.767883e-002, 5.890284e-004, 5.499072e-004, -9.125523e-003, -4.002758e-002, -2.337545e-002, -8.611050e-003, 2.509235e-003, -1.135331e-002, 1.338314e-002},
{1.838181e-003, -2.262177e-003, 3.399451e-003, 5.000751e-003, 1.174541e-002, 8.126433e-003, -8.817714e-004, -2.394582e-002, 2.745883e-002, -1.620470e-002, 1.013037e-002, -5.754251e-002, 1.013037e-002, -1.620470e-002, 2.745883e-002, -2.394582e-002, -8.817714e-004, 8.126433e-003, 1.174541e-002, 5.000751e-003, 3.399451e-003, -2.262177e-003, 2.487927e-003, 1.988478e-002, 3.147314e-003, -2.113708e-003, 6.933560e-003, -8.330609e-003, -4.045862e-003, 3.628261e-003, 1.615834e-002, -3.588914e-002, 5.179431e-003, -5.909890e-003, 1.677828e-002, 2.517971e-002, -2.571035e-002, 5.308337e-002, -3.111695e-002, 6.375718e-003, 3.071160e-002, 1.100194e-002, 4.479099e-003, 7.621479e-003, -3.525486e-002, 2.091790e-002, 2.967452e-003, -3.215787e-002, -3.414284e-002, 1.139771e-002, 7.969098e-003, 3.264951e-002, 2.734536e-003, 1.830261e-002, 4.335333e-002, -8.914891e-002, 2.759121e-002, -2.154953e-002, -4.344351e-002, -3.347273e-002, 1.647493e-002, 4.072090e-003, 9.433095e-003, -3.053922e-002, -3.564610e-002, 1.864946e-002, 1.929527e-005, 2.383210e-002, 1.616042e-002, 3.013293e-002, -5.044894e-002, 3.721435e-002, -2.201250e-002, 8.204467e-003, -8.326578e-003, 1.228012e-002, -1.498661e-003, -1.324304e-002, -2.186507e-002, -1.274968e-002, -4.415332e-002, -1.533408e-002, -2.352385e-002, -2.807864e-003, 4.288892e-003, 8.063667e-003, 8.565819e-003, -1.852339e-002, -1.329475e-002, 1.244734e-002, 1.331237e-002, -4.765214e-002, 2.678363e-002, -1.320237e-003, 1.012565e-003, 2.548188e-002, 5.945694e-003, 4.932580e-002, 6.896590e-002, 7.088111e-003, -2.549439e-002, 1.940743e-002, 1.583258e-002, 2.435204e-002, 2.178398e-003, -1.305843e-003, 2.225669e-003, -4.435453e-002, 1.753568e-002, -3.601369e-002, 5.692208e-003, -1.067898e-002, -1.755929e-002, -6.938467e-002, -4.063515e-002, -2.413255e-002, -1.180999e-002, -1.596730e-002, 1.008870e-002, -3.814480e-002, 7.033882e-003, 1.721213e-002, 5.452137e-003, 2.540084e-002, -1.006623e-003, 2.531491e-002, -1.809735e-002, -7.442039e-002, -3.127431e-002, -3.039884e-002, 8.778693e-003, 2.502224e-002, -3.324227e-002, -5.576858e-002, 4.747798e-002, -5.471741e-002, -2.367987e-003, 2.768570e-002, 1.404927e-002, 2.151622e-003, -3.288702e-002, 8.798052e-002, 5.199975e-002, 1.235095e-002, -3.208598e-002, -3.651519e-002, -4.403160e-002, 1.644952e-002, 5.714110e-003, -2.132080e-002, 5.172687e-002, -1.630773e-002, -1.683705e-002, 1.277332e-002, 1.813132e-002, -1.565854e-002, -5.194354e-002, -2.437405e-002, -4.147267e-002, -5.021193e-003, -5.273201e-002, -4.673940e-002, 3.362761e-002, 1.469904e-002, 2.046972e-003, 2.837014e-002, 9.047798e-004, 1.818166e-002, 7.384621e-003, 1.862097e-002, -8.721320e-002, 1.830019e-002, 5.052052e-002, 2.239829e-002, -7.097307e-002, -4.349921e-002, 2.629760e-002, -1.731077e-002, -1.129409e-002, 2.344337e-002, 1.230500e-002, 3.186080e-005, -4.253855e-002, -5.633678e-002, 1.574443e-003, -5.310036e-003, 1.801411e-002, 1.365407e-002, 6.362584e-002, 6.399858e-002, 4.610901e-003, 2.579129e-002, -6.307602e-002, -2.231866e-003, 1.197746e-002, 1.658206e-002, 2.025179e-002, -3.634746e-002, 3.277937e-002, 2.634349e-002, -1.673069e-003, 3.150035e-002, -4.932136e-003, 9.363746e-003, 1.198124e-002, 6.927567e-002, 4.813661e-002, 1.485381e-002, 8.770774e-003, 2.011719e-002, 6.723440e-003, 1.289602e-002, 1.755357e-003, 1.560090e-002, -4.955479e-002, 3.795053e-002, 1.651125e-002, 4.376461e-004, -2.885296e-002, -7.253906e-003, 1.989778e-002, 2.976920e-002, 7.003779e-002, -1.972347e-002, -3.808632e-002, -4.532965e-002, -9.266385e-003, -1.149808e-003, 3.556214e-002, 2.998593e-002, 3.499851e-002, 1.866728e-002, 3.775542e-002, 2.073224e-002, 3.801153e-003, -2.936385e-004, -4.270916e-002, -1.806067e-002, 1.149139e-002, -4.774777e-002, 9.820470e-003, -9.814568e-003, -5.746947e-002, 4.556986e-002, -5.049438e-002, 8.726424e-003, -1.553339e-002, -5.014743e-003, -3.174472e-002, 2.091252e-002, 3.032606e-003, 2.252991e-002, 3.192921e-002, 6.561777e-003, 4.767585e-003, 6.109471e-003, 1.575429e-002, -2.284222e-002, -4.352842e-002, 3.226517e-002, 7.833157e-003, 2.062521e-002, -2.022665e-002, 4.072371e-002, 1.796987e-002, 3.337231e-002, 3.069266e-002, 1.124473e-003, -1.874079e-002, 1.145943e-002, -6.329408e-004, 2.113381e-002, 3.379001e-002, 2.095276e-002, 1.487942e-002, 1.725740e-002, 1.342668e-002, 7.066568e-003, 1.252203e-002, 1.758079e-002, 9.572282e-003, 8.462637e-003, -1.809559e-002, -1.822734e-003, 7.970400e-002, -4.350199e-002, 4.591272e-002, -3.076633e-003, 7.752900e-002, 4.280827e-002, 3.350633e-003, 3.394529e-004, -7.717287e-003, 4.769681e-003, 1.740507e-002, 1.422372e-002,


© ISO/IEC 2004 — All rights reserved

Copyright International Organization for Standardization
Provided by IHS under license with ISO
No reproduction or networking permitted without license from IHS
Not for Resale

1.476647e-002, 3.769312e-003, 4.133984e-003, 7.096885e-003, 2.808145e-002, 1.110630e-002, -1.297772e-003, 2.005685e-002, 2.065865e-002, 6.389297e-002, 9.076517e-002, 1.756299e-002, -2.727414e-003, -5.258223e-003, -4.739959e-003, -2.057277e-003, -2.847117e-002, -4.376387e-002, -4.376387e-002, -2.847117e-002, -2.057277e-003, -4.739959e-003, -5.258223e-003, -1.336338e-002, -1.153862e-002, 5.337141e-002, 8.317986e-002, 3.064080e-002, 1.242422e-002, 3.430423e-003, -1.723412e-003, -5.586335e-002, -5.877852e-002, 4.020581e-002, 5.021835e-002, 1.629889e-003, 4.859765e-002, 1.065835e-001, 2.192552e-002, 8.710007e-003, -1.352702e-003, 1.964845e-003, 1.954734e-003, 9.364678e-002, 3.265981e-002, 7.090861e-002, -2.387395e-002, -2.070386e-002, -3.583646e-002, 1.487414e-002, 1.159764e-002, -1.488532e-002, -7.748588e-003, -6.131478e-003, -1.849808e-002, 8.279270e-002, -3.862359e-002, 3.625046e-002, 3.111692e-002, -4.672901e-002, -7.869485e-003, 1.507992e-002, -8.984033e-004, -4.712385e-003, -1.289931e-002, -1.233192e-004, 1.257115e-002, -2.605327e-002, -2.576798e-002, -2.446845e-002, -1.023498e-002, 7.607724e-003, 1.487640e-002, -8.586283e-004, 2.818430e-003, -2.371466e-003, 6.314350e-003, -1.447374e-002, 3.297416e-002, 4.686986e-002, 3.888723e-005, -3.047456e-003, 8.082176e-003, -2.993295e-004, 1.619742e-003, 5.875177e-003, -2.550372e-003, -1.800711e-003, 2.427515e-002, 1.825546e-002, 6.334089e-003, 3.842909e-003, 1.802933e-002, -2.210938e-002, -2.652426e-002, -2.652426e-002, -2.210938e-002, 1.802933e-002, 3.842909e-003, 6.334089e-003, 2.954004e-002, -4.327313e-002, -1.571281e-002, 5.658902e-002, 3.223054e-002, 1.487850e-002, 3.090635e-002, 2.877111e-002, -6.999944e-003, -4.476415e-002, 7.543999e-004, 6.844436e-002, 1.318148e-002, 6.174738e-002, 5.648346e-002, 3.371589e-003, 5.400695e-003, 1.534982e-002, -1.182529e-002, 6.427931e-002, 1.225646e-001, 6.448821e-002, -7.517362e-002, 4.298896e-002, 5.857093e-003, -6.322402e-003, -1.631709e-002, 7.081680e-003, -2.117877e-002, -3.236393e-002, -2.187657e-002, -2.472764e-002, -7.773482e-002, 3.590855e-002, 5.137773e-002, 5.570878e-003, -4.473162e-003, -3.141049e-003, 5.713392e-003, 1.823275e-002, 4.374009e-003, -2.320391e-002, -2.560573e-002, 4.215421e-002, -5.292451e-002, -1.186583e-003, 8.036573e-003, 6.527808e-003, -4.042438e-004, 5.157381e-003, 1.747904e-002, 5.284855e-003, -1.286069e-002, -9.132131e-003, -3.103741e-002, -2.173313e-002, 1.164993e-002, -6.988880e-004, 5.842466e-003, 1.146014e-002, 4.332630e-003, 1.548596e-003, 1.416299e-002, -3.908401e-003, -2.596060e-003, 2.898613e-002, -6.538553e-003, 6.598221e-003, 3.977756e-002, -2.083237e-002, 2.727678e-002, 4.037414e-002, 4.037414e-002, 2.727678e-002, -2.083237e-002, 3.977756e-002, 6.598221e-003, 4.270816e-002, -8.283094e-002, -1.112101e-002, 2.606195e-002, -2.087344e-003, 2.215723e-002, -2.731763e-002, 1.819981e-002, -6.910319e-002, 2.532081e-003, 2.652170e-002, 3.743928e-002, 4.473517e-002, -2.258291e-002, 8.034437e-003, 1.444389e-002, 1.897236e-002, -7.163760e-003, 1.967769e-002, -4.541640e-002, -3.107256e-002, 4.143502e-002, 6.045466e-002, -2.087826e-002, -1.173024e-002, -7.071706e-003, 1.057856e-002, 1.440230e-002, 1.164937e-002, 8.808325e-003, 3.603724e-002, 3.858650e-002, 8.234568e-002, -1.688688e-001, -2.264187e-002, -1.339005e-002, -4.971546e-004, 3.765225e-003, 8.358079e-003, 2.436788e-002, 7.173396e-003, -1.075755e-002, -6.204167e-003, -9.567291e-003, -9.023346e-002, 3.846335e-002, 5.888649e-003, -2.458337e-003, 2.158439e-003, 1.059092e-002, 1.418797e-002, 8.917892e-003, -8.815862e-003, -2.750453e-003, -2.591461e-002, -4.989024e-002, -8.733037e-003, 1.253426e-002, 1.168995e-003, 2.732332e-003, -1.063551e-003, 1.524508e-002, 4.635716e-003, -1.724326e-003, 1.494607e-003, -8.057653e-003, -7.151310e-003, 6.080443e-003, -9.642706e-003, -1.858031e-002, 1.879462e-002, -7.382517e-003, -7.382517e-003, 1.879462e-002, -1.858031e-002, -9.642706e-003, 6.080443e-003, 5.052981e-002, -4.899537e-002, 8.939096e-003, 2.456646e-002, -2.306455e-002, -1.369786e-002, -7.992116e-003, -1.455266e-002, 2.482551e-002, 1.419959e-002, 4.887916e-004, 1.008505e-001, -1.260248e-003, -9.873111e-002, -1.652171e-001, -5.674434e-003, 3.220563e-002, 5.879856e-003, 3.842239e-002, 1.885433e-002, -2.026981e-002, -1.748918e-002, -2.599804e-002, 1.209305e-001, 9.777685e-002, 1.183300e-002, -2.676588e-002, -5.205818e-004, 2.289912e-002, 1.728306e-002, -5.248031e-003, -1.671012e-002, 9.207508e-002, -1.176189e-001, -2.939036e-002, 2.014617e-002, 7.337311e-003, 2.000704e-002, 3.165613e-003, 1.749630e-002, -3.019624e-003, -1.792935e-002, 2.421395e-003, -3.547156e-002, -7.056609e-002, 1.209650e-002, 4.114687e-003, -2.270425e-003, 1.724039e-002, 1.170577e-002, 4.583227e-003, -1.468631e-002, -2.044592e-002, 3.754542e-002, 4.107910e-002, -3.773904e-002, -2.189319e-003, 6.370121e-003, 1.643611e-002, 7.933829e-003, 1.079219e-002, -2.681657e-003, -6.088269e-003, 4.384861e-003, 1.310499e-002, 1.970348e-002, -2.079278e-002, -1.625420e-002, -1.977916e-003, -1.977916e-003, -1.625420e-002, -3.062690e-002, 3.517919e-002, 1.784272e-002, 3.922284e-003, 3.835352e-002, -8.166185e-003, 2.482971e-002, 3.202544e-003, 6.717015e-003, 1.276129e-002, -3.090122e-002, -9.026831e-002, -3.425334e-002, -3.425334e-002, -9.026831e-002, 1.071033e-003, -4.467226e-002, -8.196599e-003, -7.730340e-003, -1.075664e-002, -1.143093e-002, -8.100246e-003, -1.801182e-003, -3.170445e-003, -5.487387e-003, 7.250449e-002, -1.648617e-001, -5.534313e-002, -5.534313e-002, -1.648617e-001, -4.980743e-002, -4.513440e-002, -1.855993e-002, -3.132699e-002, -8.909182e-002, -2.347119e-002, -2.131316e-002, -8.711775e-003, -1.616362e-002, -5.619322e-002, -4.033262e-002, -4.917209e-002, -6.675231e-003, -6.675231e-003, -4.917209e-002, -3.445398e-002, -1.314952e-002, 1.227781e-002, -1.696013e-002, -1.017500e-002, -1.714797e-002, -1.119087e-002, 7.902380e-003, 1.144555e-003, -3.014427e-004, 3.145642e-002, -4.475211e-002, 4.119610e-002, 4.119610e002, -

© ISO/IEC 2004 — All rights reserved


Copyright International Organization for Standardization
Provided by IHS under license with ISO
No reproduction or networking permitted without license from IHS
Not for Resale

4.475211e-002, -1.502965e-001, -3.895359e-002, 1.046279e-002, -8.623685e-003, -1.644288e-002, -5.037910e-002, -9.625701e-003, -6.903630e-003, -4.304392e-003, -2.530420e-002, 1.751016e-002, 7.245994e-002, -7.930365e-004, -7.930365e-004, 7.245994e-002, -6.473052e-003, 2.880222e-003, 2.558407e-003, 3.445433e-003, 3.760039e-002, -6.437033e-002, 6.507142e-004, -5.813919e-003, -2.401862e-003, -1.642790e-002, -1.278920e-002, 9.554118e-002, 1.851423e-002, 1.851423e-002, 9.554118e-002, -3.505521e-002, 3.825584e-002, 1.408617e-002, -2.268731e-003, 1.780807e-002, -2.355888e-002, -1.771124e-003, 1.212139e-003, -4.335246e-004, 1.177039e-004, -1.127216e-003, -2.209558e-002, 2.181130e-002, 2.181130e-002, -2.209558e-002, -1.953641e-002, 1.320138e-002, -9.332481e-003, 1.481088e-002, 1.371550e-002, -7.018538e-003, 1.271897e-003, 3.136527e-003, -1.962467e-003, -2.820425e-003, 4.128610e-002, -5.828981e-002, -4.957509e-002, -4.957509e-002, -5.828981e-002, 8.688849e-002, 4.709488e-002, 9.096084e-003, 2.945685e-002, 6.759721e-002, 9.630764e-003, 4.710279e-003, 2.350917e-003, 1.291790e-002, 1.186709e-002, -4.453704e-002, -9.019319e-002, -6.724623e-003, -6.724623e-003, -9.019319e-002, -6.262687e-002, -3.719076e-002, -3.392114e-004, -6.079838e-003, -2.052267e-002, -3.312736e-002, -9.417702e-003, 6.494105e-004, 2.293146e-003, -2.995629e-003, -8.093006e-002, -4.256658e-002, -1.741223e-003, -1.741223e-003, -4.256658e-002, -8.060920e-002, -2.214640e-002, -1.382721e-002, -2.659460e-003, -1.936584e-002, -7.728126e-004, 9.763894e-003, -1.383298e-003, -4.666815e-003, 1.060327e-003, -3.652444e-002, 2.857312e-003, -1.484526e-002, -1.484526e-002, 2.857312e-003, 5.727970e-002, 2.789242e-003, -3.233194e-003, 2.260794e-003, 2.349660e-002, 1.223025e-002, 1.180593e-002, 1.160302e-002, 3.139032e-003, 6.886881e-003, -1.675509e-002, -7.008741e-002, 3.318527e-002, 3.318527e-002, -7.008741e-002, 4.638490e-002, 3.259774e-002, 9.313366e-004, -3.447648e-002, -5.341042e-002, -2.813433e-002, -1.208532e-003, 7.298203e-004, -3.871943e-003, -1.283257e-002, 1.346748e-002, -7.545927e-002, -1.691344e-002, -1.691344e-002, -7.545927e-002, 9.613625e-002, 1.004163e-002, 4.306964e-003, 9.185901e-003, 2.188526e-002, -3.788737e-002, -6.901426e-003, -3.281361e-003, 1.262217e-003, 1.684127e-002, 7.764687e-002, -2.225485e-002, -1.395337e-002, -1.395337e-002, -2.225485e-002, 1.253074e-001, 2.223379e-002, 1.337957e-003, 1.458598e-004, -4.851108e-004, -3.653679e-002, 2.132945e-002, 4.287101e-003, -1.397281e-004, -1.227987e-004, 3.265631e-002, -2.944735e-002, 2.093441e-002, 2.093441e-002, -2.944735e-002, 2.025103e-002, -5.989085e-002, -2.829637e-002, 5.651553e-003, 2.107280e-003, -1.073047e-002, -7.946463e-003, 2.355477e-003, 3.094089e-003, -8.672806e-003},
{1.940514e-003, 3.698354e-003, 3.553483e-003, 2.095012e-003, -4.419906e-003, 5.311576e-003, -2.632621e-003, -4.045816e-003, -1.397293e-002, -1.102340e-002, -4.168775e-003, -6.821885e-003, -4.168775e-003, -1.102340e-002, -1.397293e-002, -4.045816e-003, -2.632621e-003, 5.311576e-003, -4.419906e-003, 2.095012e-003, 3.553483e-003, 3.698354e-003, 1.096413e-002, 3.766984e-002, -1.621828e-002, -1.051798e-002, -6.765244e-003, 3.518813e-003, -2.758513e-002, 1.051394e-002, 1.665071e-002, 3.759370e-002, 5.029134e-006, 1.549078e-002, -5.395396e-002, -1.563794e-002, 1.970364e-002, -4.388602e-003, 1.009127e-002, -3.657010e-002, -2.598595e-002, 7.180324e-003, -2.663922e-002, 4.914325e-003, 7.091679e-003, -1.351162e-004, -1.843438e-002, -4.876219e-003, 1.691678e-002, -4.501891e-002, -1.391278e-002, -5.201681e-002, 4.713232e-002, -1.100582e-001, 1.948149e-004, 2.045767e-002, -3.695697e-002, -1.382662e-002, 4.288159e-002, 1.173907e-002, -3.029544e-002, -5.354067e-002, -3.357849e-003, -4.207477e-002, -2.474939e-002, 1.825548e-002, 4.457115e-003, 8.459415e-003, -3.848070e-002, -3.024996e-002, 4.112050e-002, 2.164341e-002, -8.100095e-003, 6.214802e-003, -3.459013e-002, -4.808674e-002, 4.287233e-003, 5.679699e-003, 3.762689e-002, 3.369912e-002, 2.565087e-002, -6.569772e-003, 2.824759e-002, -2.284939e-002, 4.278933e-002, -1.120045e-002, -3.217068e-003, 2.207310e-002, -1.208675e-002, 5.020121e-004, -8.446017e-003, 7.205417e-002, 2.750303e-002, -5.987632e-002, -1.613730e-003, -4.896991e-002, 4.593697e-002, 6.396151e-003, -2.836857e-002, 6.024838e-002, 5.643233e-002, 6.756366e-003, -3.590560e-002, -4.500929e-003, 3.044037e-003, -5.658172e-003, 3.372249e-002, 6.546533e-002, 3.896600e-003, 1.648397e-002, -3.110559e-002, -3.774469e-003, -4.749930e-002, -3.738980e-002, 1.534713e-002, 1.036930e-002, 4.447685e-002, 3.667975e-002, 3.774288e-002, 3.111953e-002, -3.525186e-002, 2.710703e-002, 2.805659e-002, -3.039287e-002, 3.383798e-002, 3.604392e-002, 5.891952e-002, 1.024944e-002, 3.090991e-003, 3.345743e-003, -2.588736e-002, -1.380411e-002, -5.045357e-002, 1.909849e-002, -1.245030e-002, -1.634786e-002, 1.021418e-002, -1.051962e-002, -6.590063e-002, 1.367215e-002, 6.920515e-002, -1.478681e-002, 2.745033e-002, 1.449072e-002, 2.027417e-002, -2.169882e-002, -5.697962e-002, -2.475666e-002, 6.691716e-002, -1.074516e-002, -2.518708e-002, -4.853177e-002, -3.086462e-002, 4.859747e-002, 7.172526e-002, -2.707508e-002, 5.255074e-002, 2.980734e-004, -9.660989e-003, 3.900649e-002, -8.595617e-002, 2.454041e-002, -1.976065e-003, 2.846605e-002, 3.569043e-002, -5.733586e-003, 4.183466e-003, -2.524318e-002, -5.713755e-002, 2.944664e-002, 4.429966e-002, -3.219584e-002, 1.739782e-002, 3.418804e-002, -2.818643e-002, -3.257969e-002, -3.470218e-002, -2.688403e-002, 1.809029e-002, -2.261563e-002, -1.771942e-002, 3.638735e-002, 8.291097e-003, -2.613893e-002, -1.705829e-002, 1.272027e-002, 3.784203e-003, -1.124522e-002, 4.477426e-003, -1.409477e-002, -3.026389e-002, -4.490338e-002, 2.365066e-002, 2.352093e-002, 8.489550e-002, 3.916995e-002, 3.575734e-002, 1.807854e-002, 3.276303e-002, 5.285508e-002, -1.154650e-003, -6.622684e-002, -2.483303e-002, -6.552709e-002, -8.911251e-002, -3.065086e-002, 1.774354e-002, -1.217047e-002,


© ISO/IEC 2004 — All rights reserved

Copyright International Organization for Standardization
Provided by IHS under license with ISO
No reproduction or networking permitted without license from IHS
Not for Resale

6.567538e-003, 1.451548e-003, 1.382552e-002, 2.975693e-002, 6.081422e-002, 5.060566e-002, 1.782501e-002, 7.954077e-002, -3.936653e-002, 2.397760e-002, -2.749593e-002, -2.693336e-002, 6.822888e-002, 2.781176e-002, 1.032313e-002, -5.549081e-002, 2.382699e-002, 1.163424e-002, -2.987024e-002, -3.715498e-002, -2.511215e-002, -2.737372e-002, -8.367627e-003, 3.947942e-003, 1.270325e-002, 3.254693e-002, 2.269567e-002, 3.802950e-002, 7.624190e-002, 4.753202e-002, -2.856668e-003, 5.784479e-002, 4.135454e-003, -4.604581e-002, -4.050327e-002, 4.372385e-002, 9.566758e-004, -1.826990e-002, -4.267918e-002, -7.654812e-003, -5.511904e-003, -2.449754e-002, -7.569222e-003, -2.096130e-002, -7.651242e-003, 1.009169e-002, 1.718792e-002, 8.846414e-003, 3.653035e-002, 5.112167e-002, 4.973413e-002, 2.273092e-002, -2.504296e-004, -1.310853e-002, 1.220337e-002, 4.363676e-002, -2.635770e-002, 3.562226e-003, -3.443882e-002, -5.320284e-002, -3.347068e-002, -2.967628e-003, -1.349326e-002, -1.735308e-003, -2.121420e-002, -7.772184e-003, -1.145596e-002, -7.750910e-004, 1.313250e-002, 7.103720e-003, 2.684929e-002, 1.458678e-002, 2.330362e-002, 2.448404e-002, 4.179669e-003, 9.498485e-002, 9.142043e-002, 1.909573e-002, 2.529886e-002, -4.609827e-002, 4.986124e-002, -3.122491e-002, 7.360331e-003, 4.419215e-003, -2.074569e-002, -2.367233e-002, -1.435485e-002, -1.460760e-002, -1.032412e-002, 6.806936e-003, 6.119212e-003, 7.254792e-003, 7.963775e-003, 1.432841e-002, 1.609250e-002, 6.141658e-003, -8.457756e-003, -2.511830e-002, 1.733291e-002, 5.385596e-002, 1.851520e-003, -3.173920e-002, -3.135174e-002, 3.331339e-002, -5.598559e-003, 5.556994e-002, 5.556994e-002, -5.598559e-003, 3.331339e-002, -3.135174e-002, -3.173920e-002, -8.064011e-002, 1.048496e-002, -1.934781e-002, 5.207803e-003, 5.780164e-002, 5.143366e-002, 2.021030e-002, 2.898457e-002, 5.140445e-002, 2.005009e-003, -3.101041e-002, -1.774181e-003, -5.884277e-002, -1.891457e-002, -5.492559e-002, -5.239489e-002, -1.988853e-002, 1.821923e-002, 1.022597e-002, 4.817047e-002, 2.248325e-002, -3.483831e-003, -1.374123e-001, 6.449351e-003, -6.261041e-002, -3.596033e-002, 1.800188e-002, 3.484750e-003, 1.654073e-002, 1.747056e-002, 5.050889e-002, 5.982386e-002, -6.628493e-002, 1.270692e-001, -1.106332e-002, -2.206786e-002, 1.468979e-002, -9.982686e-004, -1.586597e-003, 1.394449e-002, 1.931294e-002, 3.601227e-002, 6.811050e-002, 7.557221e-002, 1.303000e-002, -4.875088e-002, 3.660334e-002, 4.278575e-003, -2.869575e-002, -6.398042e-003, 1.184247e-002, 1.478054e-002, 3.109306e-002, 7.908220e-002, 2.285082e-002, -4.164734e-002, -6.463288e-002, 2.373050e-002, -1.414292e-002, -3.257777e-003, -8.717689e-003, 1.055006e-002, 1.131591e-002, 2.396410e-002, 4.223977e-002, -1.782989e-002, 6.582060e-003, 1.673583e-003, -2.938252e-002, -9.271656e-003, -1.718568e-002, 3.608812e-002, 3.608812e-002, -1.718568e-002, -9.271656e-003, -2.938252e-002, 1.673583e-003, -4.529335e-002, 2.580543e-002, 4.393413e-002, -2.764936e-002, 1.856841e-002, 1.994202e-003, 6.947912e-002, 5.293928e-002, 2.762780e-002, 2.712528e-002, -1.331568e-003, 3.090031e-002, 4.645099e-002, 6.882888e-002, -7.232056e-003, 1.716113e-002, 1.818194e-002, 3.768538e-002, 1.618988e-002, -5.956459e-002, -1.317450e-002, -4.873446e-002, 7.827381e-002, -3.359598e-002, 8.641094e-002, 2.372182e-002, 1.844897e-002, 2.090940e-002, 1.248911e-002, 1.464129e-002, 2.328162e-002, -1.341512e-002, -1.552970e-002, -7.258510e-002, 3.522396e-002, 3.251351e-002, 1.820915e-002, 6.389968e-003, 6.198380e-003, -7.873326e-003, -1.089512e-002, 2.396428e-002, -6.385328e-003, -5.321419e-002, -1.154305e-001, 1.789119e-002, 2.871059e-002, 1.097620e-002, 1.136818e-002, 1.087340e-003, 5.306980e-003, 8.456613e-003, 1.147848e-002, 2.446485e-002, -7.595244e-002, -7.136195e-002, -3.548873e-002, 2.257596e-002, 1.171800e-002, 1.749700e-002, 5.346875e-003, 6.613204e-003, 7.655018e-003, 8.675615e-003, 2.479816e-002, -3.384376e-002, -5.161141e-003, 2.753514e-003, -7.867524e-003, -2.663104e-002, -7.809728e-003, 1.482044e-002, 1.482044e-002, -7.809728e-003, -2.663104e-002, -7.867524e-003, 2.753514e-003, -9.755968e-002, 3.023037e-002, 6.751244e-002, 3.316591e-002, -2.128205e-002, -6.911906e-003, -2.238983e-002, -6.667755e-002, -3.327504e-002, 6.109509e-002, 8.470768e-002, 1.590214e-001, -7.464951e-002, 6.685691e-003, 1.958057e-002, 2.975851e-002, -8.395117e-003, 2.410662e-002, 1.818452e-002, 5.765709e-003, 9.345666e-002, -4.210894e-002, 4.285986e-002, -1.091198e-001, 3.238065e-002, 2.325436e-002, 4.535166e-002, 2.041496e-002, 7.097458e-004, -1.116933e-002, 7.588935e-003, 2.465741e-002, 6.485081e-002, -1.098947e-001, -1.647233e-001, -4.461025e-002, 6.836056e-003, 8.943286e-003, 9.057166e-003, -6.760670e-003, -1.329072e-002, -5.804616e-003, -1.034666e-002, 1.919233e-002, -6.613935e-002, 9.151071e-003, -4.764533e-002, -3.370343e-002, -3.359999e-003, 4.437570e-003, -7.459584e-003, 5.078455e-003, 9.151144e-003, -5.367547e-003, -2.607208e-002, -2.107529e-002, -2.388096e-002, -2.449652e-002, -1.019041e-002, -9.365073e-003, 5.560157e-003, 2.304187e-003, 2.574556e-003, 3.828041e-003, 5.632792e-003, 9.449946e-003, -1.331925e-003, -1.987982e-002, -8.032412e-003, 6.910256e-003, -1.666873e-003, 2.790155e-002, 2.790155e-002, -1.666873e-003, 6.910256e-003, -8.032412e-003, -1.987982e-002, 6.046271e-002, -3.044535e-003, -2.477618e-002, 1.808809e-002, -4.264927e-002, -2.285695e-002, -2.316161e-002, -1.878931e-002, -3.537750e-002, 6.209562e-003, 3.992392e-002, 4.288487e-002, -3.354798e-002, 5.622228e-002, 3.409940e-002, -3.761863e-002, -4.448625e-002, -3.051364e-002, -4.554308e-002, -5.069356e-002, -1.721232e-002, -6.526784e-002, -9.287930e-002, 3.420046e-002, -5.311000e-002, -4.304481e-002, 6.126812e-003, 9.193843e-003, -1.139772e-002, -3.216346e-002, 3.027188e-002, 1.843211e-002, -3.612649e-002, -2.537687e-002, 2.502217e-002, -5.034781e-003, -3.886295e-002, -2.507781e-002, -4.656597e-003, -2.071417e-003, -2.352760e-004, -2.916025e-003,

© ISO/IEC 2004 — All rights reserved


--`,,```,,,,````-`-`,,`,,`,`,,`---

Copyright International Organization for Standardization
Provided by IHS under license with ISO
No reproduction or networking permitted without license from IHS

Not for Resale

5.618291e-003, -1.294107e-001, -1.465163e-002, -1.226423e-002, -2.519305e-002, -3.293597e-002, -1.222602e-002, -1.141362e-002, 7.991418e-003, 1.017452e-002, 1.346255e-002, -3.323202e-002, -5.355638e-003, 5.295498e-003, -8.115875e-003, -2.110282e-002, -1.327613e-003, -7.337412e-003, -3.129749e-003, 3.951187e-003, 1.180296e-002, 3.475731e-003, -1.040410e-002, -2.524399e-003, -3.456165e-002, 4.413828e-002, -7.163818e-003, -7.163818e-003, 4.413828e-002, 3.013695e-002, -2.030331e-002, -2.593686e-003, 1.041517e-002, -7.000839e-003, -2.122307e-003, -3.419893e-002, -5.633387e-004, 7.234366e-005, 8.737173e-003, -3.620464e-003, 4.892727e-002, 2.114562e-002, 2.114562e-002, 4.892727e-002, -9.925058e-003, 4.153933e-002, 1.309258e-002, 1.593037e-002, 2.680267e-002, 5.923776e-002, 9.601098e-003, 2.445009e-003, 6.982764e-003, 2.530765e-002, 1.159729e-002, -4.512046e-002, -7.937652e-003, -7.937652e-003, -4.512046e-002, 2.466902e-002, 2.757284e-003, -4.500166e-005, 8.382368e-003, 7.713129e-003, -2.799875e-003, 1.167769e-002, 2.108023e-003, 4.102642e-003, 1.706649e-003, 9.156418e-003, -3.223038e-002, -8.621134e-003, -8.621134e-003, -3.223038e-002, 3.117663e-002, 2.887546e-002, 1.250564e-002, 1.236647e-002, 5.082915e-003, -1.904267e-002, 5.041815e-003, 1.932404e-003, 3.670815e-003, -2.269608e-002, 9.965619e-002, 8.344080e-002, -6.738013e-003, -6.738013e-003, 8.344080e-002, -1.483845e-002, -1.852844e-002, -7.176883e-005, 4.296190e-003, -1.066786e-002, 8.902051e-003, 5.611193e-003, 7.866832e-004, 1.212480e-002, 1.446410e-002, -5.962256e-002, 4.106183e-002, 1.996339e-002, 1.996339e-002, 4.106183e-002, -1.728750e-002, 1.973750e-002, 1.969052e-002, 1.991010e-002, 1.480159e-002, 4.800125e-002, 1.018770e-002, 8.543941e-003, 1.663210e-002, 6.366488e-002, 8.514495e-003, 1.271857e-002, -1.193447e-002, -1.193447e-002, 1.271857e-002, 1.527883e-002, 2.023359e-004, 1.394444e-002, 1.817693e-002, 3.394559e-002, 2.294205e-002, 2.960997e-002, 6.688576e-003, 6.364858e-003, 9.353562e-003, -2.268615e-002, 7.970833e-002, 2.442046e-002, 2.442046e-002, 7.970833e-002, -5.002299e-002, 3.541444e-002, 4.702485e-003, 1.616793e-002, 2.686258e-002, -2.175576e-003, 1.447894e-002, 1.034705e-002, -1.517265e-003, -5.352117e-003, -6.843989e-002, 1.274213e-002, -4.787644e-002, -4.787644e-002, 1.274213e-002, -1.018703e-001, -5.365388e-002, -8.411676e-003, -1.877178e-002, -1.671021e-002, -1.837528e-002, -2.224564e-003, -1.623553e-003, -2.059023e-003, 1.071705e-002, 2.127445e-002, -1.779467e-002, 1.534854e-002, 1.534854e-002, -1.779467e-002, -1.245952e-002, 1.072755e-003, 3.051566e-004, 4.035846e-003, 2.988188e-002, -3.232147e-002, -2.243660e-002, 7.229871e-003, 6.159829e-004, 9.511441e-003, -1.145490e-002, -3.481031e-002, -1.735462e-002, -1.735462e-002, -3.481031e-002, -3.302642e-002, 1.624952e-002, 4.178005e-003, 5.927257e-003, -7.074452e-003, -1.182668e-002, 4.887570e-003, -2.649680e-003, 4.737320e-003, -2.361653e-002, -1.361128e-002, 3.510647e-002, 1.329690e-003, 1.329690e-003, 3.510647e-002, -1.461382e-001, -7.835641e-002, -4.909771e-002, -1.892650e-002, -7.796118e-002, -3.773887e-002, -1.889892e-002, -9.532775e-003, -2.637884e-003, -1.165414e-002, 4.086925e-002, -1.549754e-002, 1.373136e-002, 1.373136e-002, -1.549754e-002, 1.742223e-002, -8.202505e-004, 1.424460e-002, 1.228363e-002, 4.193618e-002, -8.304891e-002, -3.715180e-002, 3.450639e-003, -4.010452e-003, -5.519388e-003, 1.135048e-003, -4.493275e-002, -2.565020e-002, -2.565020e-002, -4.493275e-002, 9.293639e-003, 2.253622e-002, 2.004480e-003, -2.459715e-003, 1.843646e-002, -2.417755e-002, -9.043560e-003, -5.193018e-003, -8.776000e-003, -2.054652e-002, 2.731066e-002, -1.178678e-002, -3.560417e-003, -3.560417e-003, -1.178678e-002, 4.755004e-002, -2.143906e-002, -5.661825e-004, -6.187484e-003, -5.007090e-003, -1.977788e-003, -2.173941e-002, -1.110496e-002, -8.340664e-003, -9.491200e-003, -3.576409e-003, -1.707898e-002, -9.327181e-004, -9.327181e-004, -1.707898e-002, -8.389885e-002, 1.174944e-001, 2.041324e-002, -1.825272e-002, 1.813750e-002, -7.790117e-002, -2.270731e-004, -1.397652e-003, -6.149692e-003, 3.229565e-004},
{1.719511e-003, 1.483179e-003, 6.758920e-004, 2.735246e-003, -8.987386e-003, 1.575478e-003, 9.092916e-003, 8.079272e-003, -5.180016e-003, 7.957396e-004, 6.749949e-004, 2.512649e-002, 6.749949e-004, 7.957396e-004, -5.180016e-003, 8.079272e-003, 9.092916e-003, 1.575478e-003, -8.987386e-003, 2.735246e-003, 6.758920e-004, 1.483179e-003, -1.572216e-002, 1.901569e-002, 8.862301e-003, 3.972648e-003, 3.102497e-002, -1.562844e-002, 5.197062e-002, -2.582751e-002, -7.151279e-003, 3.817649e-002, -1.026728e-002, 1.344626e-002, 2.117425e-002, 3.376615e-002, -5.860799e-003, 1.694685e-003, -1.644127e-002, 1.267130e-002, 1.923358e-002, -2.311571e-002, -7.603518e-003, -3.459351e-003, -7.819153e-003, -2.915880e-002, -1.504616e-002, 1.264554e-002, 3.725708e-003, 3.014448e-002, -5.421752e-002, 5.449984e-002, -1.810548e-002, 1.351021e-002, 9.081860e-003, 2.061314e-003, 1.905872e-002, -6.251894e-002, 5.372948e-002, -3.457487e-002, 4.434390e-002, 1.458123e-002, 1.990565e-002, -4.505616e-003, -1.814583e-002, -4.655708e-003, 3.236272e-002, 4.264181e-002, -4.456455e-003, 2.605425e-002, -2.835602e-003, -5.049504e-002, 2.025346e-002, -4.227491e-003, 2.586791e-002, 3.170890e-003, -5.535049e-003, 2.144887e-002, 9.117074e-003, 1.726099e-002, -3.297361e-002, -2.861407e-002, 3.821101e-002, 1.228890e-002, 1.277490e-002, 2.159452e-002, -6.927716e-003, 2.906714e-002, -3.880165e-002, 1.575156e-002, -2.446067e-002, 2.259113e-003, 2.965763e-002, -3.170869e-002, -1.832021e-002, -1.081883e-002, -2.472098e-002, 1.214911e-002, -3.104648e-002, -1.135997e-002, 4.619295e-002, -2.543587e-003, 4.689621e-002, -6.849827e-002, -2.425659e-002, -6.481333e-003, 2.231506e-002, -5.184535e-002, -1.626838e-002, 2.944798e-002, -4.095289e-002, -2.171445e-003, 3.390693e-002, 2.036889e-002, -3.824168e-002, -6.295791e-002, -4.295089e-002, -4.010295e-002, 4.527131e-003, -1.533328e-002, -


© ISO/IEC 2004 — All rights reserved

--`,,```,,,,````-`-`,,`,,`,`,,`---

Copyright International Organization for Standardization
Provided by IHS under license with ISO
No reproduction or networking permitted without license from IHS
Not for Resale

6.377159e-003, 8.690971e-003, 2.364692e-002, 9.360600e-002, 5.114681e-002, -5.810116e-003, -2.205836e-002, 3.381371e-002, -3.561760e-002, -2.616840e-002, 4.142796e-002, 4.304876e-002, -4.195487e-002, 3.497192e-002, 2.649572e-002, -1.504275e-002, 3.051275e-002, -3.087004e-002, -4.807186e-003, -3.276193e-003, 3.023966e-002, 1.057523e-002, 1.008751e-003, 1.812973e-002, 4.689684e-002, 5.565573e-002, 5.872852e-002, -3.027758e-002, 2.117973e-002, -8.019158e-002, -8.859817e-002, -7.737650e-002, 3.875191e-002, 8.658711e-002, -1.722283e-002, 7.151612e-002, 7.338665e-002, 4.202427e-002, -1.703823e-002, 9.000438e-003, 3.220380e-002, -4.131511e-003, -9.256253e-003, -3.241255e-002, -3.728481e-002, 3.097140e-002, 1.561467e-002, -5.214358e-003, 2.894066e-002, 4.830366e-002, 1.965226e-002, -7.674614e-002, -3.021740e-002, 4.824811e-002, -8.113339e-003, 1.073787e-002, 3.501407e-002, -4.239096e-002, -4.170468e-002, 3.984498e-002, 2.791491e-002, 4.603772e-002, -4.542523e-003, -1.492499e-002, 7.528653e-003, -2.247897e-002, -1.191707e-002, -8.199354e-003, -1.569279e-002, -2.540577e-002, -5.560385e-003, 2.029488e-002, -2.645473e-002, 4.640070e-002, 9.304350e-003, 2.346147e-002, 3.516061e-003, -3.913645e-003, -5.622251e-003, -7.394915e-002, -8.988056e-003, -3.301272e-002, -5.421814e-002, -4.825786e-002, 6.665491e-002, 1.903965e-002, -6.338300e-003, -8.265543e-003, 3.401828e-003, -1.405009e-002, -1.773402e-002, -4.198706e-002, -9.959172e-003, -3.539920e-003, -2.902370e-002, 5.990564e-002, -1.021186e-002, -3.034957e-002, -7.056282e-002, -3.598532e-002, -6.877797e-002, 3.489443e-002, -2.287815e-002, -7.731756e-003, -1.781452e-002, -1.129053e-002, 4.023576e-002, 4.853420e-002, 2.932103e-002, 2.619669e-002, 1.125630e-002, -9.103014e-003, -1.097425e-002, -9.551124e-003, 5.251294e-003, -4.742705e-003, -3.863364e-004, 9.139667e-003, -8.181687e-002, -5.536343e-002, 3.963352e-002, -1.135344e-002, 2.220736e-002, 2.024076e-002, 3.444819e-002, 4.120516e-002, -8.443395e-002, -4.368351e-002, 3.345469e-002, 4.286998e-002, 2.478220e-002, 1.673535e-002, 2.571298e-003, -3.936415e-003, 3.065182e-003, 4.945559e-003, 1.592618e-002, 2.644025e-002, 8.248172e-003, 3.087007e-002, -4.175110e-002, 6.698197e-002, 8.869727e-002, -1.486292e-002, -3.336699e-002, -9.534017e-003, 1.943372e-002, -5.115211e-002, -3.749956e-002, -7.391461e-003, 3.514006e-002, -3.619744e-003, 2.213055e-002, 5.441814e-003, 1.133916e-002, -1.911313e-002, -5.045271e-003, 3.998331e-003, 1.092870e-002, 1.884281e-002, -1.841099e-002, -1.385418e-003, -5.750747e-003, 2.205210e-002, 1.104441e-001, 3.704737e-002, 2.177201e-002, 2.836693e-002, -3.122951e-002, -7.306121e-002, -3.652707e-002, 1.468599e-002, 2.775282e-002, 1.287022e-002, 8.858116e-003, 2.290162e-002, -2.359360e-003, -4.676645e-003, 2.294953e-003, -5.982982e-003, 9.096931e-003, 1.567441e-002, 9.902497e-003, 3.577633e-002, -2.925103e-002, 9.644802e-003, -3.176148e-002, -3.366941e-002, -5.725906e-003, -3.828672e-003, -4.307339e-002, 2.231467e-003, -3.271075e-002, -1.386813e-002, -1.386813e-002, -3.271075e-002, 2.231467e-003, -4.307339e-002, -3.828672e-003, -1.143066e-003, -7.924159e-002, 3.215078e-002, -2.178571e-002, -2.913347e-002, 1.222173e-002, -2.318622e-002, -7.220988e-003, -3.713780e-002, -6.974649e-003, -1.193220e-002, 1.087369e-001, -4.024926e-002, -9.965721e-003, 3.611348e-002, -4.975961e-002, -2.734939e-002, -1.890962e-002, -2.091134e-002, -1.667092e-002, -5.321042e-002, 1.721766e-001, 5.006347e-002, 8.081678e-002, 3.795521e-002, -2.527818e-002, -1.580954e-002, -1.779640e-002, 1.619429e-003, -5.153260e-003, 3.040381e-003, -2.101131e-002, -1.100833e-001, 4.233659e-002, -6.930574e-002, 4.283117e-002, -4.866117e-003, -3.425138e-003, -1.728103e-002, -3.239291e-005, -3.947790e-003, -5.890074e-003, -1.675355e-002, 1.481250e-002, 5.758046e-003, -6.369276e-002, -1.085466e-002, 1.645153e-002, 2.084427e-002, 8.690504e-003, -1.926549e-003, -1.298224e-003, -4.621418e-003, -2.208065e-002, -4.437806e-002, 4.879641e-002, -4.998686e-003, -1.858358e-002, 1.273105e-002, 1.945080e-002, 6.389507e-003, -4.346568e-003, -2.535084e-003, -6.611718e-003, -1.215754e-002, -3.485427e-002, 5.038400e-003, -2.422455e-003, 3.703016e-002, -1.029818e-002, 1.575929e-002, 1.252880e-002, 1.252880e-002, 1.575929e-002, -1.029818e-002, 3.703016e-002, -2.422455e-003, -1.542111e-002, -3.070561e-002, 1.286738e-001, -1.650085e-002, 1.074487e-002, -1.439889e-002, 5.185577e-002, -9.690680e-003, 4.047821e-002, 6.373927e-003, 5.685545e-002, 2.491618e-002, 1.638179e-001, -2.115153e-002, -6.895825e-002, -3.766185e-002, -3.152321e-002, -1.887014e-002, 8.868540e-003, -2.846294e-002, -4.850321e-002, -1.325855e-001, -2.306082e-002, -1.777025e-001, -5.171006e-002, -1.556137e-002, -1.216388e-002, -1.666432e-002, 1.211189e-003, 2.728326e-003, -2.999068e-002, -1.026771e-001, 1.555965e-001, 2.498690e-002, 6.340614e-003, -4.154928e-002, -1.432762e-002, -5.510418e-003, -1.097730e-002, -1.312548e-002, -3.433925e-003, -9.811689e-003, -7.118780e-003, -1.226928e-002, -2.817482e-002, -1.725744e-002, -2.994981e-002, -1.157791e-003, -2.992284e-003, -1.818845e-003, -8.803844e-003, 7.313659e-003, -2.789255e-003, -1.877013e-002, -5.981237e-002, -7.077929e-004, -4.301466e-002, -2.339867e-002, 3.049072e-003, -1.385945e-003, -1.236485e-003, -1.215895e-003, 1.087891e-002, -3.375284e-003, -5.412535e-004, 4.595359e-003, 3.647841e-003, 1.821536e-002, 3.449426e-002, 4.763222e-004, 1.600020e-002, 2.442502e-002, 2.442502e-002, 1.600020e-002, 4.763222e-004, 3.449426e-002, 1.821536e-002, 9.738207e-002, -6.587443e-002, 6.473977e-003, 3.581650e-002, 5.141438e-002, 2.208462e-002, -1.289295e-002, -3.213638e-002, 1.870130e-002, -5.147331e-002, 5.645188e-003, 1.040696e-002, 2.847712e-002, -2.477536e-002, 3.124054e-002, 6.086570e-003, 1.812559e-002, -1.510037e-003, 3.592351e-003, 4.545732e-002, -1.258472e-001, 1.700966e-002, 9.636637e-002, 1.183894e-004, -3.477193e-002, 1.979217e-002, 1.669092e-003, 6.241458e-003, 2.281645e-002, 3.221557e-002, 8.861154e-003,

© ISO/IEC 2004 — All rights reserved


Copyright International Organization for Standardization
Provided by IHS under license with ISO
No reproduction or networking permitted without license from IHS
Not for Resale

7.981294e-003, 3.277994e-002, -8.987185e-002, -6.011943e-002, -5.328368e-003, -1.131415e-002, -8.546412e-003, -5.307834e-003, 4.559837e-003, 3.388250e-003, 1.033130e-002, -1.167174e-003, 1.032408e-002, -2.659931e-003, 2.545133e-002, -9.881129e-003, 7.064818e-003, -1.023840e-003, 2.189029e-003, 4.175493e-003, 1.212003e-002, 1.678413e-002, 1.820943e-002, 4.373612e-002, -1.912239e-003, 6.036847e-003, -1.978614e-002, 7.437007e-004, 3.789662e-004, -1.368113e-003, 2.116269e-003, 6.030931e-003, 1.297711e-002, 1.986137e-002, 3.133638e-002, -1.240824e-003, -9.337316e-003, -1.364706e-002, 3.050846e-003, 1.048462e-003, -4.191555e-002, -4.191555e-002, 1.048462e-003, 3.050846e-003, -1.364706e-002, -9.337316e-003, 1.801144e-002, 4.601176e-003, -3.508285e-002, 1.751016e-002, -6.954213e-002, -2.684629e-002, 2.534187e-002, 6.502860e-002, 1.623363e-002, -4.693847e-002, 2.274243e-002, 5.200166e-002, -7.108043e-002, -1.814466e-002, 3.422145e-002, -6.517492e-004, 1.564685e-002, 2.642641e-002, 1.623615e-002, -2.621000e-002, -1.992664e-002, -4.291412e-002, -1.285407e-003, 8.084545e-002, 5.432415e-003, 5.130870e-003, 1.363423e-002, 8.194133e-003, 1.669257e-002, -9.321236e-004, 5.448879e-003, -3.887608e-002, -4.231315e-002, -1.818514e-002, 4.758641e-002, -1.521599e-002, 2.831457e-003, -2.191360e-003, 1.817710e-003, -7.053752e-003, -7.043045e-003, -3.093318e-002, -2.788150e-002, -6.147463e-002, 7.116626e-002, 3.280719e-002, 2.973143e-002, 3.142145e-002, 1.377725e-002, 3.617379e-003, -7.708408e-003, -4.432007e-003, -9.644118e-003, -9.926554e-003, 7.079897e-002, 1.984126e-002, 1.258439e-002, 7.323308e-003, 1.812360e-002, 1.855408e-002, 3.425134e-003, -5.685414e-003, 3.451046e-003, 6.133062e-003, 1.602847e-002, 1.045731e-002, 4.073032e-002, 4.835996e-002, 5.494424e-003, 5.494424e-003, 4.835996e-002, -5.125168e-002, -5.508227e-002, -1.648341e-002, 3.285077e-003, -1.346250e-002, -3.533106e-002, -9.502614e-003, -1.217625e-002, -8.760733e-003, -9.849132e-003, -9.787563e-003, 5.279240e-002, 9.745782e-003, 9.745782e-003, 5.279240e-002, -3.266305e-002, 3.356561e-002, 4.256178e-003, 4.082046e-003, 3.478966e-003, -3.931758e-002, 2.804135e-002, 4.804954e-003, 3.976630e-003, 3.914600e-003, 3.230856e-003, 7.356793e-002, 2.120205e-002, 2.120205e-002, 7.356793e-002, -6.045581e-002, -1.053790e-003, -3.292916e-003, 2.841425e-003, -1.084982e-002, -2.009906e-002, 1.257604e-003, 3.622605e-003, -5.914833e-004, 3.513939e-003, -9.551094e-003, -3.751645e-002, 1.549371e-003, 1.549371e-003, -3.751645e-002, -2.295705e-002, -8.702023e-003, -1.792283e-002, -7.117725e-003, -1.699788e-002, -2.741523e-002, -2.413086e-002, -1.011235e-002, -2.271025e-002, -3.707197e-002, 2.050352e-004, 3.571929e-002, -1.887256e-002, -1.887256e-002, 3.571929e-002, 6.263650e-002, 4.883826e-002, -3.447705e-003, -1.965308e-002, 1.701699e-002, 2.672532e-002, 1.602769e-002, 6.784983e-003, -1.637482e-003, 8.779331e-003, -3.687370e-002, -9.096258e-002, -2.981068e-002, -2.981068e-002, -9.096258e-002, -1.249753e-001, -1.899843e-002, -1.112621e-003, -3.658821e-003, -3.152720e-002, 1.215856e-002, -4.156830e-003, 1.668622e-004, -3.660613e-004, 5.677255e-004, 2.866197e-002, -4.043512e-002, -2.120769e-002, -2.120769e-002, -4.043512e-002, -1.394720e-001, -2.993776e-002, -1.169995e-002, -5.275340e-004, -2.186420e-002, 1.821477e-002, -4.163317e-003, 2.849734e-003, 3.811032e-003, -5.627015e-003, -1.730334e-002, -2.162752e-003, -6.342733e-002, -6.342733e-002, -2.162752e-003, 5.839319e-002, -7.616936e-003, -5.201279e-003, 1.974815e-002, 2.802384e-002, 2.038502e-002, 6.328165e-003, -3.078327e-003, 4.262543e-003, 2.224782e-003, -8.032263e-002, -5.437153e-002, 2.384438e-002, 2.384438e-002, -5.437153e-002, -1.507094e-002, 1.578923e-002, 9.283713e-003, 3.386442e-003, -2.108404e-002, -1.760929e-002, -5.694766e-003, -8.673414e-004, 6.618821e-004, -5.405012e-003, -6.742665e-003, 7.056931e-002, 5.305673e-003, 5.305673e-003, 7.056931e-002, 7.732828e-003, 4.756206e-003, 3.147381e-003, -3.259615e-003, -1.548656e-002, -2.447253e-002, -1.519381e-002, 7.856575e-004, -2.805087e-003, -2.591235e-003, 2.193360e-002, 1.210075e-002, -3.526038e-003, -3.526038e-003, 1.210075e-002, 1.547554e-002, -1.554412e-002, -6.705908e-003, -1.760544e-003, -5.492385e-003, -1.657619e-002, -2.039481e-003, -5.512768e-003, -3.084002e-004, -7.633781e-003, 7.096739e-003, 3.853130e-002, 7.426697e-003, 7.426697e-003, 3.853130e-002, 3.123346e-002, 1.361312e-002, 1.078731e-002, 1.951555e-002, 4.601171e-002, -2.416117e-003, 1.856901e-003, 8.663902e-003, 8.485304e-003, 1.340015e-002, 1.326156e-002, -4.125456e-002, -3.886901e-002, -3.886901e-002, -4.125456e-002, -1.297233e-003, -1.934193e-002, 1.355423e-002, 1.018220e-002, 1.506931e-002, -1.541318e-002, -1.608339e-002, -9.586278e-003, 4.177184e-003, 1.018807e-002, 7.745158e-002, -1.197912e-001, -6.375449e-002, -6.375449e-002, -1.197912e-001, 4.632520e-002, -5.503614e-003, -2.250944e-003, -3.586894e-003, -3.961570e-002, -3.689631e-003, -8.548465e-003, -3.365300e-003, -2.097605e-003, 3.147014e-003, -6.462816e-002, -5.319317e-002, -1.041541e-002, -1.041541e-002, -5.319317e-002, 2.957039e-002, -3.903007e-002, -6.531709e-003, -3.573811e-003, -7.338457e-003, 2.032800e-003, 6.855806e-003, -2.458109e-004, -1.915999e-003, -2.061972e-003, 3.435699e-002, 2.346729e-002, -3.511155e-002, -3.511155e-002, 2.346729e-002, -6.922726e-002, -9.135348e-003, -8.059319e-003, 1.401638e-002, -6.113738e-002, -1.561977e-003, 1.313625e-002, 5.356189e-003, -7.450952e-003, -3.201612e-002},

{9.117302e-005, -2.380323e-003, 9.567557e-004, 1.863703e-002, 4.527841e-003, -3.839335e-003, -7.483026e-004, -2.216423e-002, 1.747765e-003, -1.994014e-003, 4.584072e-003, 2.588813e-002, 4.584072e-003, -1.994014e-003, 1.747765e-003, -2.216423e-002, -7.483026e-004, -3.839335e-003, 4.527841e-003, 1.863703e-002, 9.567557e-004, -2.380323e-003, 1.342817e-002, -5.125731e-003, -2.800630e-002, -1.115708e-002, -6.435034e-003, -3.069905e-002, -2.551574e-002, 3.883828e-003, 4.856480e-003, -3.950518e-003,



--`,,```,,,,````-`-`,,`,,`,`,,`---

© ISO/IEC 2004 — All rights reserved

Copyright International Organization for Standardization
Provided by IHS under license with ISO
No reproduction or networking permitted without license from IHS

Not for Resale

7.937076e-002, -4.117828e-002, -1.940384e-002, -8.797699e-003, -2.616536e-002, 1.266412e-002, 5.949316e-003, -2.799761e-002, -3.312496e-003, -9.836991e-003, -1.198219e-002, 1.393566e-002, 1.910839e-002, 1.980439e-002, -1.343620e-002, -6.076860e-002, -3.633495e-002, -1.861617e-003, -3.979195e-002, -1.186354e-002, -4.185202e-004, 7.988452e-003, -4.081605e-002, -3.104264e-002, 7.394030e-002, 3.242875e-002, 4.983732e-002, 1.082397e-002, -3.826448e-003, -4.790094e-002, -1.715079e-002, -2.734347e-002, -2.383915e-002, -1.933274e-002, -2.985604e-002, 1.001577e-002, -1.721017e-003, -1.872558e-002, 2.152222e-002, 2.844028e-002, 3.236178e-002, 7.120916e-002, 2.253411e-002, -5.894200e-002, 4.783533e-002, -6.728469e-002, -6.415447e-002, -5.116361e-002, -1.419046e-002, 5.173689e-002, 5.875804e-002, -2.358200e-002, -1.188287e-002, 1.823253e-003, 5.648314e-002, -7.478597e-003, -4.142175e-004, 2.898092e-002, 3.525685e-002, 1.637227e-002, -4.237046e-002, -4.639019e-002, 2.486225e-002, 8.221133e-002, 1.697092e-002, -5.989992e-002, -3.560467e-002, 2.507778e-002, 1.088552e-002, 2.756105e-002, 1.470120e-002, 2.121264e-002, -2.016484e-002, -6.076340e-002, -4.483641e-002, 4.781268e-003, 3.130076e-002, 1.361367e-002, 3.025639e-003, -9.673340e-003, -1.239208e-003, 4.021587e-002, 6.237600e-002, -1.864448e-002, -3.115317e-002, -1.073837e-002, -6.611770e-003, -6.090699e-004, -4.522062e-002, 5.736451e-003, 1.857862e-002, -6.796586e-003, 3.450098e-002, 4.180043e-002, 1.895732e-002, 1.775869e-002, -2.313731e-002, 4.124594e-003, 4.706003e-002, -1.204815e-002, 1.646995e-002, -1.041542e-001, -2.768563e-002, -3.362544e-003, 2.670445e-002, -4.793885e-002, -6.274212e-002, 2.632948e-003, 7.262022e-002, 1.282770e-002, 2.688261e-002, -2.855984e-002, 6.311148e-003, -5.549393e-003, -2.547017e-002, 7.202593e-003, -2.291388e-002, 4.115348e-002, 1.064200e-002, -1.545846e-003, -1.918356e-002, -5.724326e-002, -6.595795e-002, -2.737524e-003, -4.643083e-002, -1.884917e-002, -5.635699e-002, 1.064387e-002, -1.730204e-003, 2.326749e-004, 1.335158e-002, -2.400027e-002, 7.434433e-003, 1.461573e-002, 1.654864e-002, 4.235167e-003, -2.560392e-002, -6.777522e-002, 2.132759e-003, -1.303117e-002, -9.363137e-002, -2.505663e-002, -3.794266e-002, -9.250671e-003, -1.192938e-003, 1.013071e-002, -2.883755e-002, -5.703771e-002, 3.038948e-002, -7.051777e-002, 5.600835e-002, 1.209653e-002, 1.632758e-002, -1.978997e-002, -7.504356e-003, 2.620619e-002, 7.700138e-005, 1.575168e-002, 1.885940e-003, 2.742409e-002, 9.231986e-002, 6.672949e-002, 1.402958e-002, 3.147712e-003, -4.313053e-002, 1.546865e-002, -3.724757e-003, 3.403039e-002, -2.963514e-003, -2.275442e-002, -2.640892e-002, 4.118941e-002, 3.669990e-003, -3.751314e-002, -3.566676e-002, -3.112308e-002, -2.785963e-002, -4.847306e-003, -2.085984e-002, -2.994942e-003, 1.518485e-002, -1.525271e-002, 1.186470e-001, 7.132261e-003, -4.967503e-003, -8.485444e-002, -6.585027e-002, -5.193140e-002, 3.686091e-002, -5.465617e-002, -7.439764e-002, -4.846396e-002, 4.842940e-002, -3.704061e-002, -6.510638e-002, -6.288376e-002, -5.022284e-002, -2.233296e-002, -2.596789e-002, -2.328770e-002, -1.061191e-002, -2.179415e-002, -2.496771e-002, -2.357353e-002, 2.632171e-002, 2.127637e-002, -1.434603e-003, 2.119898e-002, -3.511342e-002, -1.196974e-002, 1.695242e-002, -8.083830e-003, -3.821079e-003, -1.152589e-002, -2.123046e-002, -7.745791e-002, 9.337488e-003, 6.659438e-003, -6.071212e-003, -2.313479e-002, -1.360625e-002, -2.103682e-002, -2.043500e-002, 1.712748e-002, -7.835480e-003, 5.874398e-003, 1.657460e-002, -4.744622e-002, 1.205701e-002, -4.712571e-002, 7.734552e-002, 4.100088e-003, -3.148276e-002, 3.264786e-002, 5.743703e-002, 3.684141e-002, -4.977766e-002, 1.994339e-002, -7.920127e-003, -1.074518e-002, -2.844473e-002, -2.416483e-002, -7.248785e-003, -1.751348e-003, -1.547264e-002, -1.909920e-003, 1.945402e-002, -2.180283e-002, -1.943339e-003, -7.088755e-003, -7.677423e-003, 4.043260e-003, 1.022255e-001, 2.523120e-002, -2.656145e-002, -1.903075e-003, -2.205162e-002, -8.237411e-003, 1.771951e-002, -4.305376e-002, -1.735726e-002, -4.012535e-003, -7.765602e-003, -2.195298e-002, -1.346990e-002, -2.452786e-004, 4.044000e-003, -2.126908e-004, -4.079269e-003, -1.319174e-002, -3.362476e-003, 6.312546e-003, -2.430079e-002, 8.122404e-003, 5.498141e-003, 5.230048e-003, 1.942916e-002, 1.409106e-003, 2.653422e-002, 7.443667e-003, 1.565906e-002, 1.059290e-002, 1.059290e-002, 1.565906e-002, 7.443667e-003, 2.653422e-002, 1.409106e-003, -2.448148e-002, 6.225073e-002, 4.403951e-002, 1.243371e-001, 2.690813e-002, 5.560828e-003, 3.122148e-002, 3.167794e-002, 4.102896e-002, 3.988399e-002, 3.376133e-002, 4.183155e-002, -4.830344e-002, -1.433839e-001, -7.441890e-002, -1.540276e-002, -2.035261e-002, 1.648159e-002, 3.600125e-002, 3.183000e-002, 2.704031e-002, 6.502766e-003, 3.231160e-002, 1.291274e-001, -3.049790e-002, -2.913996e-002, -3.563810e-004, -8.597637e-003, 6.732102e-003, 1.237455e-002, -8.681288e-004, -1.566247e-002, 1.223801e-001, 5.209229e-002, -1.451838e-003, 8.066695e-002, 4.354881e-002, 1.505109e-002, -1.556639e-002, 5.273907e-003, 8.069835e-003, 1.184979e-002, 5.052698e-003, -4.241742e-003, 5.248332e-002, -1.326292e-002, 8.028660e-003, -8.023707e-003, -1.602087e-002, -1.634142e-002, -2.066537e-003, 9.650315e-004, 2.848552e-003, -4.352784e-003, -2.890761e-002, 3.803967e-002, 5.986514e-002, 4.049979e-003, 1.387137e-002, -1.269326e-002, -5.734620e-003, -1.699065e-003, -1.935291e-004, -5.824835e-003, -1.073955e-002, 4.624131e-002, -1.662769e-002, -3.242031e-002, 4.690017e-002, -9.836873e-003, 2.549735e-002, 1.281739e-002, 1.281739e-002, 2.549735e-002, -9.836873e-003, 4.690017e-002, -3.242031e-002, -1.485331e-002, -2.820008e-002, -1.679958e-002, -7.899107e-002, 2.361587e-003, 3.517716e-002, 6.369730e-002, 1.504516e-001, -3.269003e-003, -1.000260e-001, 7.778316e-002, 2.722280e-002, -6.265003e-002, 1.174026e-001, 4.616730e-002, 6.665627e-003, 2.112394e-002, -2.847665e-002, -6.386880e-002, -3.770740e-002,

© ISO/IEC 2004 — All rights reserved


Copyright International Organization for Standardization
Provided by IHS under license with ISO
No reproduction or networking permitted without license from IHS
Not for Resale

7.545978e-002, -1.260887e-002, -1.023225e-001, 3.388390e-002, -2.672398e-002, -6.319984e-004, -1.098714e-003, 3.822586e-003, -9.883294e-003, -2.553990e-002, -5.936096e-002, -1.068037e-001, 9.316420e-002, 6.017048e-002, 3.461404e-002, -7.268392e-003, -1.300898e-002, 1.134914e-002, -1.215994e-003, -1.552495e-003, 1.459076e-003, 2.003765e-002, 3.139988e-002, 6.865673e-002, 7.703827e-002, -1.537699e-002, -4.180046e-005, -1.209476e-002, 3.192558e-003, -1.643032e-003, -1.679819e-002, -1.707474e-002, 1.118724e-002, 3.570573e-002, 6.283214e-002, 4.910243e-002, 2.670698e-002, -8.513141e-003, -7.812681e-003, 1.508455e-003, -3.168893e-003, 5.176095e-004, 9.708961e-003, 1.526831e-002, 2.255608e-002, 4.069696e-002, -2.453169e-003, 1.223459e-002, -2.910789e-002, -2.783419e-002, 2.951224e-003, -3.990458e-004, -3.990458e-004, 2.951224e-003, -2.783419e-002, -2.910789e-002, 1.223459e-002, -5.217649e-002, 2.786532e-002, 1.813491e-002, 2.141053e-002, -2.913043e-002, -3.742130e-003, 2.435577e-002, -4.416318e-002, -2.228623e-002, -5.967134e-003, -1.318656e-002, -2.567446e-002, -4.167468e-002, -5.092013e-002, 8.738366e-002, 7.968946e-003, -1.690160e-002, -5.680174e-003, 2.054448e-002, 3.501232e-002, 4.743688e-002, 9.936812e-003, 5.903883e-002, -5.464122e-003, -8.240374e-002, -6.769430e-003, 2.104053e-002, 3.372271e-003, 7.130711e-003, 7.374026e-003, 5.183807e-002, -2.529399e-005, 5.880268e-002, 7.598575e-002, 1.062996e-001, -6.396695e-002, -3.919143e-002, 6.248709e-003, 5.057277e-003, 1.957003e-002, 1.510391e-002, 1.566712e-002, -1.856414e-003, 4.808405e-002, -3.544706e-002, -6.208594e-004, -6.292865e-003, -3.336273e-002, -1.219184e-002, -8.246954e-003, 1.678915e-003, -2.889135e-003, -4.987092e-003, -5.541065e-003, 2.351635e-003, 2.199525e-002, 4.726846e-002, -1.354748e-002, -4.478750e-003, -1.904736e-002, -1.001112e-002, -4.577296e-003, 5.882572e-003, -3.778576e-003, -1.814119e-003, 4.261473e-002, -2.571280e-004, 1.072923e-002, -2.986827e-002, -2.171929e-002, -2.271099e-002, 5.462197e-003, 5.462197e-003, -2.271099e-002, -2.171929e-002, -2.986827e-002, 1.072923e-002, -3.573355e-002, 5.321310e-002, 2.399491e-002, -3.218244e-002, 5.618209e-003, 1.251664e-002, 1.783798e-002, 1.286339e-002, -4.343692e-003, 2.533401e-002, 3.462482e-002, 1.029273e-002, -1.029557e-001, 1.410190e-002, -6.013841e-003, -1.073200e-002, 6.344236e-003, 1.656491e-002, 3.281835e-002, 2.162818e-002, 2.030082e-002, 5.360655e-002, -7.922437e-002, 4.081018e-002, 8.465740e-002, -5.221248e-003, -1.736134e-003, 1.230879e-002, 9.144230e-003, -6.846965e-004, 1.841124e-002, 7.012245e-002, 2.497920e-002, 5.431841e-002, 4.284144e-002, 1.277394e-002, -6.601760e-003, -4.541331e-003, 2.642119e-003, 7.334655e-004, 1.594873e-002, 3.522886e-002, 3.344046e-003, 5.535980e-002, -4.602255e-002, 3.594828e-002, -4.739772e-003, -3.336211e-002, -2.085639e-002, -6.006868e-003, -8.963307e-003, -2.411695e-003, -5.145050e-003, -2.492228e-002, -7.924550e-003, 4.136233e-002, 3.722636e-002, 4.919108e-004, -5.407477e-003, -1.041307e-002, -1.398688e-002, -5.215274e-004, 2.693591e-003, -2.051255e-002, 1.067069e-003, 5.276871e-002, 9.379279e-003, -5.493798e-002, -1.820706e-002, -1.820706e-002, -5.493798e-002, 8.031730e-002, -6.641526e-002, -1.396192e-002, 9.439320e-003, 2.461245e-002, 1.612269e-002, -1.796238e-003, -1.616092e-004, 1.099977e-003, 3.182635e-003, 2.529700e-002, 2.657595e-002, 2.008190e-002, 2.008190e-002, 2.657595e-002, -2.043911e-002, -1.225238e-002, 1.418904e-002, 7.453681e-003, 1.250856e-002, 1.628030e-002, 2.704052e-002, 4.586157e-003, 9.291786e-003, 6.375419e-003, 2.550698e-002, -6.480309e-002, -1.494714e-002, -1.494714e-002, -6.480309e-002, 7.684556e-002, -2.469141e-002, -1.467295e-002, -1.665250e-002, -3.019122e-002, 4.458732e-002, -7.599049e-003, -3.378537e-003, -4.911767e-003, -2.588498e-003, -1.400062e-002, -1.516650e-002, 8.647508e-004, 8.647508e-004, -1.516650e-002, -5.117151e-002, -6.115240e-003, 9.399731e-003, 9.217125e-004, -4.769655e-002, -2.295383e-002, -4.520361e-003, 1.126593e-003, -1.109514e-002, -1.215147e-002, -2.506020e-002, -3.676807e-002, -2.795812e-003, -2.795812e-003, -3.676807e-002, 2.231645e-002, 5.780408e-002, 1.739462e-002, 2.223187e-002, 5.859840e-002, 3.348619e-002, 1.690996e-002, 9.648196e-003, 1.114096e-002, 3.026710e-002, 9.813083e-003, -9.970496e-002, -4.260045e-002, -4.260045e-002, -9.970496e-002, -6.827010e-002, -7.046938e-003, -5.065814e-003, 7.523091e-003, 1.961425e-002, 3.642472e-002, 6.976256e-003, -1.618937e-003, 1.210156e-003, -2.652489e-002, -8.389985e-002, -2.301321e-002, -8.280269e-003, -8.280269e-003, -2.301321e-002, 3.023526e-004, 3.030725e-002, 1.239450e-002, 4.065582e-003, 1.909073e-002, 8.715511e-002, -3.135648e-002, -4.780525e-003, 5.965844e-003, -1.840907e-003, 5.576581e-002, -1.904719e-002, 1.826776e-002, 1.826776e-002, -1.904719e-002, 1.157208e-002, 7.466756e-002, 1.332994e-002, 3.354229e-002, 3.434330e-002, 2.158833e-002, 2.847334e-002, 1.105844e-002, 8.660952e-003, 1.677809e-002, -2.496419e-002, -1.287178e-002, -1.287088e-002, -1.287088e-002, -1.287178e-002, 3.449409e-002, 1.809653e-002, 2.447263e-003, 7.695581e-003, 6.285029e-002, 1.954920e-002, 1.026246e-002, -1.239356e-003, 1.378236e-002, 1.505525e-002, -7.943051e-003, 5.721516e-002, -1.010764e-002, -1.010764e-002, 5.721516e-002, -3.017362e-002, -3.366536e-003, -1.169401e-002, -1.618277e-003, 6.292405e-003, 4.978557e-002, -5.018666e-003, 1.596568e-003, -4.347679e-003, -2.647904e-003, 2.404287e-002, 6.074960e-002, 1.756756e-002, 1.756756e-002, 6.074960e-002, -9.888583e-003, 2.601841e-002, -1.387203e-003, 9.370732e-003, -1.571341e-002, 5.804953e-002, 1.071991e-002, -1.018712e-003, 1.093437e-002, 3.291129e-003, 1.361235e-002, -3.367852e-003, -1.229525e-002, -1.229525e-002, -3.367852e-003, 1.158998e-002, -2.453804e-002, 4.025532e-003, 1.374159e-002, 6.959333e-003, 9.798850e-003, 1.086260e-002, -1.980243e-003, 6.670137e-003, -1.005668e-003, -1.404778e-002, 2.392456e-002, 2.644831e-002, 2.644831e-002,


© ISO/IEC 2004 — All rights reserved

Copyright International Organization for Standardization
Provided by IHS under license with ISO
No reproduction or networking permitted without license from IHS
Not for Resale

2.392456e-002, 8.998199e-002, -1.172441e-002, -2.250871e-003, 3.406366e-003, -5.468058e-003, 5.797503e-002, -4.874200e-002, -3.262630e-003, 3.738498e-003, 6.577548e-003, 4.450185e-002, 2.707920e-002, 1.791864e-002, 1.791864e-002, 2.707920e-002, -9.463015e-002, -5.008164e-003, 1.847903e-003, -1.341679e-002, -1.609110e-002, 1.390548e-003, 3.973044e-003, 1.926978e-003, -8.676747e-003, -1.329107e-002, -3.866738e-002, 9.999382e-002, 4.463020e-002, 4.463020e-002, 9.999382e-002, -1.021202e-001, 1.323133e-002, -5.590009e-003, 5.708963e-003, 5.610709e-003, -5.562761e-003, 5.691413e-003, 5.976305e-003, 6.191688e-003, 7.204420e-003, 7.550289e-004, 7.924667e-003, 1.762199e-002, 1.762199e-002, 7.924667e-003, 2.171731e-002, -3.398501e-002, -2.647611e-002, -1.419392e-002, -2.305133e-002, 8.274964e-003, -2.023610e-002, -8.070358e-003, -9.658760e-003, -6.106537e-003},
{-4.001474e-004, -2.879060e-003, 2.319655e-003, 4.731229e-003, -6.892660e-003, -1.301012e-002, 2.903741e-002, 5.078479e-003, 8.379124e-004, 3.621551e-003, -2.275742e-002, 2.021900e-002, -2.275742e-002, 3.621551e-003, 8.379124e-004, 5.078479e-003, 2.903741e-002, -1.301012e-002, -6.892660e-003, 4.731229e-003, 2.319655e-003, -2.879060e-003, 1.009756e-002, -6.337368e-005, -1.409714e-002, -1.046062e-002, -1.130454e-003, 4.756350e-002, 4.466275e-002, 2.434385e-002, 3.753796e-002, 2.952982e-003, 7.498320e-002, 5.013423e-002, -2.821996e-002, -3.960892e-002, -1.563063e-002, -3.735655e-002, 2.845407e-002, 1.687991e-002, 8.900762e-003, 8.437647e-003, 1.134898e-002, 1.516890e-002, 1.328438e-002, -1.946298e-003, -2.214301e-003, 9.679951e-003, 5.270996e-002, 2.178914e-002, 1.923014e-002, -5.902161e-002, -1.983490e-002, -3.026257e-002, 5.349206e-002, 2.518798e-002, -1.094535e-002, 3.296189e-002, -5.753419e-002, -3.102527e-003, 1.879408e-002, -2.450303e-002, 1.866699e-002, 3.343051e-002, 1.055961e-002, -3.541060e-002, -2.060802e-002, 1.280084e-002, 1.842112e-002, -1.687318e-002, 4.759761e-003, 6.325204e-004, -3.891433e-002, -1.160693e-002, -9.572640e-003, 1.952302e-002, 4.533604e-002, -7.327364e-004, 7.957823e-002, 3.898189e-002, -6.461972e-002, -2.253334e-002, 1.120298e-002, -5.828669e-002, -4.181779e-002, 2.942864e-003, -9.246116e-003, 2.955526e-003, 4.248475e-002, 3.717649e-002, 9.067283e-003, 1.985360e-002, -8.012068e-003, -3.635569e-003, 2.393318e-003, -2.552583e-002, 5.983712e-002, -5.899193e-002, 2.833151e-002, 8.792634e-002, 1.192808e-001, 1.025600e-001, -5.738183e-003, 1.051941e-002, -5.629126e-002, -3.735461e-002, 3.146567e-002, 2.597803e-002, 2.622448e-002, -2.348158e-002, 5.214861e-003, -1.438724e-002, -1.872503e-002, -3.148264e-002, -3.413090e-002, 7.093134e-002, 4.551270e-002, 3.258066e-002, 4.503162e-003, -3.743737e-002, -2.977324e-002, -8.442334e-003, -2.382737e-002, 4.841368e-003, -5.914265e-002, -2.641365e-002, -2.593556e-002, -2.490208e-002, -3.994351e-002, -2.979708e-002, -2.318090e-003, 2.866781e-002, 3.058476e-002, -1.701913e-002, 5.961159e-002, 2.720098e-002, 6.007398e-003, -5.290537e-003, 2.508849e-002, 1.692763e-003, -3.048574e-002, -2.515432e-002, -2.255669e-003, -1.084612e-002, -6.690768e-002, -5.243582e-002, -1.876141e-002, 3.567082e-002, 3.551399e-003, 5.444756e-002, -3.170801e-002, -6.601674e-003, 3.522211e-002, -3.901129e-002, -4.555502e-003, 1.116051e-002, -1.322655e-002, 3.388667e-002, 2.839616e-002, -1.161487e-002, 8.293810e-003, 6.117356e-002, -2.663837e-003, -3.072492e-002, -1.079105e-002, -1.670956e-002, -1.420523e-002, 4.700897e-002, 3.574429e-002, 2.474578e-002, 3.797100e-002, -2.501957e-002, 1.242456e-002, 5.740429e-003, -9.964104e-003, -3.247038e-002, 1.286108e-002, 1.035807e-002, 9.743383e-003, 8.611370e-003, -2.858991e-002, -9.855412e-002, -2.398066e-002, 6.169136e-003, -3.094006e-002, 3.932217e-002, 1.275400e-002, -8.992135e-004, -3.256347e-003, -1.274562e-002, 6.263087e-002, 7.812615e-003, -1.865563e-002, -8.761617e-002, -3.319176e-002, -1.744135e-002, 2.022839e-003, -3.728913e-002, -3.196036e-003, -4.830026e-003, 2.659454e-002, -3.506677e-002, -3.628347e-002, -6.760987e-003, -5.107566e-002, 2.315005e-002, 2.922857e-002, 3.283037e-003, 5.190838e-003, 2.755656e-002, 3.271142e-002, 2.329025e-002, -2.418579e-002, -1.742349e-002, -5.498396e-002, -4.034600e-002, -3.198837e-002, 5.324224e-002, -1.685583e-002, -3.323943e-002, 2.340041e-002, -6.260298e-002, -7.089168e-003, 7.184195e-003, -7.858567e-002, 2.746714e-002, 5.236562e-002, 3.354106e-002, 2.625899e-002, 4.387497e-003, 2.829545e-003, 2.687857e-002, 2.490729e-002, 7.330467e-003, -1.185557e-002, -9.902767e-003, -6.289668e-002, -9.684102e-003, -6.880491e-002, 6.481696e-002, 5.957126e-002, -1.854997e-002, -6.450591e-002, 8.333030e-004, -1.995032e-002, 4.284507e-002, 4.130879e-002, 6.975340e-002, 8.402384e-003, 4.413091e-003, 1.837914e-002, 2.466690e-002, 8.178619e-003, 1.483268e-002, 1.195627e-002, 1.042211e-002, -2.429956e-002, -3.214755e-002, -3.236029e-002, -2.278992e-002, -2.266495e-002, 9.321143e-002, 6.292843e-002, 7.313051e-002, 2.868657e-002, 2.031507e-004, 2.154920e-002, 4.373908e-002, 2.808463e-002, 1.536415e-003, -1.681802e-003, 2.461380e-002, 2.629365e-002, -5.343042e-004, 6.435300e-003, 1.950539e-002, 7.978242e-003, -1.213428e-002, 3.237179e-003, -1.467793e-002, -2.159575e-002, -1.768495e-002, -2.618539e-002, 6.762602e-003, 4.063643e-002, -1.006262e-002, 1.797096e-002, 6.788025e-003, 3.990941e-002, 6.873774e-004, 9.344890e-003, -8.498061e-003, 4.109811e-003, 1.101141e-002, 1.907211e-002, 1.837792e-002, 8.604388e-003, 1.123461e-003, -7.084948e-003, -1.217453e-002, -2.016586e-002, -7.126408e-003, -3.846729e-002, -1.901621e-002, 1.060171e-002, 4.869971e-002, 5.591402e-002, -2.140602e-002, 3.413949e-002, -2.428824e-004, 1.241221e-002, 2.133200e-002, -1.892521e-002, 2.071329e-002, 2.071329e-002, -1.892521e-002, 2.133200e-002, 1.241221e-002, -2.428824e-004, -2.018319e-002, 1.773158e-002, -5.303185e-002, -4.578379e-002, 4.977649e-002, 2.732365e-002, -8.841640e-002, -1.291506e-001, -5.148413e-003,

© ISO/IEC 2004 — All rights reserved


--`,,```,,,,````-`-`,,`,,`,`,,`---

Copyright International Organization for Standardization
Provided by IHS under license with ISO
No reproduction or networking permitted without license from IHS
Not for Resale

1.128202e-001, -4.179393e-002, -1.040467e-001, -2.172099e-002, 2.122307e-002, 1.063997e-002, 2.133058e-002, -6.821025e-004, -9.809038e-003, -2.243489e-002, -7.809773e-003, 4.688652e-002, 4.390852e-002, 1.210637e-001, 7.111393e-002, 2.039293e-003, 2.154038e-002, 1.021707e-003, 3.737172e-003, -3.077419e-003, -1.962315e-003, -9.440780e-003, 1.617420e-002, 1.826242e-002, -2.857926e-002, -2.975812e-002, 1.328538e-003, 2.535004e-003, -5.122744e-003, -3.222793e-003, -8.196803e-003, -1.025486e-002, -3.013364e-003, 3.432729e-002, 1.195492e-002, 2.665988e-002, 1.001274e-002, 7.635482e-003, 2.537446e-002, -6.420734e-004, 1.801568e-003, -4.981846e-003, -6.029386e-003, 2.759253e-003, 6.008927e-003, 1.076037e-001, 1.467033e-002, 2.203606e-002, 2.134949e-003, 6.762741e-004, 3.433245e-003, 2.631352e-004, 3.326548e-003, -7.100740e-003, 1.232313e-003, 1.583527e-002, 4.579796e-002, -1.778460e-002, 1.724009e-003, 1.157685e-002, -3.598106e-002, -7.374836e-003, -3.872877e-002, -3.872877e-002, -7.374836e-003, -3.598106e-002, 1.157685e-002, 1.724009e-003, -2.957610e-003, 1.008128e-001, -6.368096e-002, -1.816847e-001, -1.385902e-001, -6.078103e-002, 5.296052e-002, 1.043704e-002, -1.150439e-001, 7.603126e-002, -6.683835e-002, 2.787945e-002, -6.302914e-002, 1.494127e-001, 2.539688e-002, -1.597333e-003, 1.542153e-002, 7.803088e-002, 4.084319e-002, 2.172163e-002, 1.018825e-002, -8.099102e-003, 1.190248e-001, 1.487498e-002, 2.609941e-002, -5.350783e-003, 9.993507e-003, 4.197557e-003, -9.196985e-003, 1.458318e-002, 3.365803e-002, 6.123320e-002, -5.201917e-002, -6.739237e-002, 1.655167e-003, -1.139623e-002, -6.164780e-003, -6.780931e-004, -1.867977e-003, 6.979509e-003, 1.016743e-002, -3.666156e-002, -2.791474e-002, -1.708280e-002, 4.938989e-002, 7.885868e-002, 1.135920e-002, -3.587362e-003, 2.423403e-003, 7.073925e-003, 1.933021e-002, -9.015295e-003, -3.413889e-002, -1.663687e-002, 5.389084e-002, 4.072362e-002, 2.739834e-002, 2.619764e-002, 8.331904e-003, 1.903128e-003, 2.190458e-003, -7.428160e-004, -1.427067e-002, -2.308770e-002, 7.218402e-003, 1.281638e-002, -2.461130e-002, -8.292630e-003, -1.427407e-003, -2.056736e-002, 3.315288e-002, 3.222346e-002, 3.222346e-002, 3.315288e-002, -2.056736e-002, -1.427407e-003, -8.292630e-003, 5.726344e-002, -1.635471e-002, 4.229815e-003, 5.867083e-002, -8.325029e-002, -1.288873e-002, -1.387527e-002, -7.144559e-002, -7.668300e-002, -7.332744e-002, -9.380709e-003, -6.391980e-002, -8.785106e-002, -4.047802e-002, 7.943508e-003, -8.369807e-004, -1.448331e-002, -1.217741e-002, -4.076488e-002, -5.092309e-002, 3.486989e-002, 5.971314e-002, -8.298210e-002, -2.685808e-002, 5.271536e-003, -3.520537e-003, -1.790574e-002, -3.760661e-004, -2.781559e-002, -2.697264e-002, -3.724626e-002, 7.001235e-002, 5.911907e-002, 1.052698e-002, -2.877668e-002, 2.078661e-002, 2.887563e-003, 1.556146e-002, 7.173850e-003, -7.845597e-003, 8.234131e-003, -2.061685e-002, -4.955950e-002, -8.202235e-004, -3.939070e-002, -9.184069e-002, -1.782627e-002, 3.899577e-003, 7.454545e-003, -4.458113e-003, -3.674490e-003, -7.528623e-003, -5.233122e-003, -1.552768e-002, -2.059457e-002, -2.813781e-002, -2.127485e-002, -4.126291e-003, -9.576623e-004, 9.483181e-003, 5.539355e-003, -7.323251e-003, -9.551793e-004, -1.396487e-002, -2.872295e-002, -4.654981e-002, 7.856267e-003, -5.943708e-003, -1.109330e-002, -2.842445e-003, 2.471131e-002, 2.328340e-002, 2.328340e-002, 2.471131e-002, -2.842445e-003, -1.109330e-002, -5.943708e-003, -1.874041e-002, 7.090498e-002, -1.685023e-003, -1.501722e-001, 3.333361e-002, 4.130056e-002, -1.625004e-002, -3.926817e-002, 2.428478e-003, -3.752910e-003, -6.167748e-003, 2.522725e-002, 1.116150e-002, 3.389840e-002, 2.445971e-002, -3.890461e-002, -2.311221e-002, -1.886599e-002, -3.187795e-002, -2.975756e-002, -1.345624e-002, 4.180136e-004, 2.016847e-002, -2.044649e-002, 2.998358e-002, 1.201635e-003, 9.301524e-003, 2.247509e-004, -6.852674e-003, 9.850314e-003, -6.888370e-003, -3.307822e-002, 2.560178e-002, 8.815387e-002, 2.487952e-002, -3.244218e-002, -2.900744e-002, 1.437827e-002, 1.085373e-002, 2.435318e-003, 1.248829e-002, -5.749681e-003, -1.605728e-003, -1.095350e-003, -1.714875e-003, -2.403988e-003, -1.490549e-002, -3.532051e-003, -3.437705e-003, -2.569886e-003, 9.638277e-003, -4.608919e-003, -2.266704e-002, -2.008529e-002, -3.199339e-002, 5.595038e-003, -2.244150e-002, 5.559579e-003, -4.222715e-003, 3.704136e-003, -1.204245e-003, 1.318513e-002, -1.335830e-002, -1.993053e-002, -1.917753e-002, -2.138255e-004, -3.903250e-002, -3.277554e-002, -3.107424e-002, -3.107424e-002, -3.277554e-002, -5.881039e-003, 1.454752e-002, 1.413446e-002, -1.661599e-002, 8.342427e-003, 1.083137e-002, -7.322057e-003, -1.045291e-003, -5.526508e-003, 6.635600e-003, -5.448806e-002, 6.063448e-002, 2.040977e-002, 2.040977e-002, 6.063448e-002, -6.218561e-002, 1.491211e-002, -4.978054e-003, -1.024001e-002, -2.343053e-003, 2.320328e-003, -4.077829e-004, 7.815321e-003, 2.977936e-003, 6.601203e-003, 8.268510e-003, 1.325481e-002, 2.462563e-003, 2.462563e-003, 1.325481e-002, -1.739362e-002, -5.213524e-003, -1.541859e-003, 4.558287e-003, 2.439478e-002, -3.439341e-002, -1.718502e-003, -4.590514e-004, 4.857092e-003, -5.001267e-003, 5.359658e-002, 4.177044e-002, -1.558320e-002, -1.558320e-002, 4.177044e-002, -1.172656e-001, 3.125615e-005, 1.825469e-004, -1.437492e-003, -1.956060e-002, -4.511635e-002, 6.756726e-003, 1.005575e-003, 3.253147e-003, -2.462427e-003, 6.090543e-002, -6.027835e-003, 1.861681e-002, 1.861681e-002, -6.027835e-003, -8.842418e-002, -5.119102e-002, -1.351094e-003, -1.658971e-002, -3.577594e-002, -2.909212e-002, -1.512740e-002, -8.824832e-003, -1.302890e-003, -1.077107e-002, 6.675462e-002, 4.627544e-002, 3.509732e-003, 3.509732e-003, 4.627544e-002, -3.235859e-002, 9.060634e-003, -5.904701e-003, -1.436518e-002, 2.056577e-002, -1.182666e-002, -1.082000e-002, 4.282664e-004, -3.758524e-003, 2.624703e-002, -3.118397e-002, 7.156808e-002, 1.422582e-002, 1.422582e-002, 7.156808e-002, -8.591437e-003,


© ISO/IEC 2004 — All rights reserved

--`,,```,,,,````-`-`,,`,,`,`,,`---
Copyright International Organization for Standardization
Provided by IHS under license with ISO
No reproduction or networking permitted without license from IHS
Not for Resale

8.057371e-003, -8.318377e-003, 1.720426e-003, 4.328422e-002, -1.296997e-005, 1.417833e-002, 5.093890e-003, 1.418789e-003, -7.443478e-003, -4.846572e-002, -2.301444e-002, -3.441106e-002, -3.441106e-002, -2.301444e-002, -4.451178e-002, -8.877271e-003, -1.437427e-002, 2.409922e-002, -4.385373e-002, -3.553695e-002, -1.844520e-003, -6.177274e-003, 1.010461e-002, 6.617380e-003, -1.006104e-001, 2.585285e-002, 4.928331e-002, 4.928331e-002, 2.585285e-002, -1.291614e-002, -2.226643e-002, -1.489189e-002, -3.271829e-002, -1.550724e-002, -1.307780e-002, -1.616557e-002, -6.721196e-003, -1.045365e-002, -4.258967e-003, -4.322236e-002, -1.987355e-002, -2.218895e-002, -2.218895e-002, -1.987355e-002, -6.945203e-002, -2.921648e-002, -1.751321e-002, -1.429262e-002, -2.138610e-002, -9.687603e-003, -8.257803e-003, -2.948900e-003, -6.346024e-003, -1.242009e-002, -2.337342e-002, 2.535913e-003, 9.290464e-003, 9.290464e-003, 2.535913e-003, -5.334942e-002, 4.482629e-003, -3.325693e-003, -1.774737e-002, -8.585845e-003, 1.963438e-002, -5.502922e-003, -8.914266e-004, -1.810379e-003, -9.039982e-003, 3.532643e-002, -1.368203e-002, -1.191695e-002, -1.191695e-002, -1.368203e-002, 7.928240e-002, 7.142872e-002, -6.120444e-003, -9.312012e-003, 3.799592e-004, 2.184390e-002, -4.937419e-004, 3.316010e-003, -1.826968e-003, -4.384082e-004, 5.619600e-002, -1.774402e-002, -2.561061e-002, -2.561061e-002, -1.774402e-002, 1.136730e-001, 9.034728e-002, 2.228704e-003, -2.737387e-004, 2.854013e-002, 3.506366e-002, 2.289019e-002, 1.978569e-002, -1.902913e-003, 1.140978e-002, 6.302546e-002, -1.218781e-002, -1.851655e-002, -1.851655e-002, -1.218781e-002, -2.623788e-002, -1.241184e-002, -6.248727e-003, -5.328829e-003, 3.479993e-003, -1.944811e-003, -3.938119e-003, -3.237253e-003, 2.990245e-003, -2.745940e-003, 5.443725e-003, 2.810647e-002, 6.499233e-003, 6.499233e-003, 2.810647e-002, 2.890252e-002, 3.395753e-003, -3.729725e-003, 2.022212e-003, -4.331758e-003, 3.948784e-002, -1.489790e-002, 6.697328e-003, -6.383300e-004, -1.403093e-003, -9.540468e-003, -4.474066e-002, 7.771224e-002, 7.771224e-002, -4.474066e-002, -6.233138e-002, -7.801771e-002, -3.006212e-002, -2.264154e-002, -3.268928e-002, -1.069448e-002, -3.367001e-004, -4.279551e-004, 6.189334e-003, -6.513822e-003},
{1.381929e-004, 9.460612e-004, 9.851665e-003, 1.313764e-002, -9.061046e-003, -2.162222e-003, 1.381973e-002, -1.696119e-003, -2.900043e-002, 9.166867e-003, -1.465232e-002, -1.365182e-003, -1.465232e-002, 9.166867e-003, -2.900043e-002, -1.696119e-003, 1.381973e-002, -2.162222e-003, -9.061046e-003, 1.313764e-002, 9.851665e-003, 9.460612e-004, -9.853201e-003, -2.350940e-004, -2.468579e-003, 3.745713e-003, 1.048943e-002, -1.406232e-002, -3.681510e-002, -4.066324e-002, 8.461627e-003, -2.971092e-002, 4.973800e-002, -2.152183e-003, 4.283095e-002, 6.262200e-003, -2.958290e-002, -3.649657e-003, -2.044616e-002, -6.427751e-002, -1.644378e-002, -1.779474e-003, -1.233311e-002, -1.308588e-002, -6.864174e-003, 9.157396e-003, 1.338551e-002, -7.261516e-003, -1.996177e-002, -2.164581e-003, -1.326330e-002, 5.505813e-002, -2.597494e-002, 2.485440e-002, 4.988912e-002, -1.880568e-002, 4.615279e-002, 3.320591e-003, 3.357748e-003, 5.739254e-003, -3.205221e-002, -1.222202e-002, -3.745988e-002, -4.901570e-003, -2.297884e-003, -2.066573e-003, 2.350832e-002, -1.891381e-002, 5.071222e-002, 3.135366e-002, -5.476715e-002, -3.651848e-003, 9.968225e-003, 3.800418e-002, -8.557727e-003, -6.379375e-002, -2.895500e-002, -1.228249e-002, -7.381741e-002, -4.944890e-002, 1.967643e-002, -5.144601e-002, -1.126127e-003, -1.264491e-002, -6.502753e-003, -1.785643e-002, -1.422231e-002, 9.825605e-003, 2.029117e-002, -4.796398e-003, 3.294679e-002, 9.931337e-003, -4.441151e-002, -4.943765e-003, -1.403535e-002, -2.694727e-002, -2.908542e-002, -5.711232e-002, -5.544731e-002, -2.485913e-002, -3.425053e-002, -1.095826e-001, -1.432655e-002, 2.436193e-003, -3.096141e-002, 1.498343e-002, 4.147923e-003, -9.206209e-002, 1.729164e-002, 4.571479e-004, 1.514610e-002, 3.032881e-002, -5.175594e-002, -3.201181e-002, 5.997609e-002, -2.087628e-002, -2.526161e-002, 2.166646e-003, 2.999236e-003, 8.962609e-002, -5.341153e-003, -8.771306e-004, -1.372893e-002, -6.372825e-002, 1.753125e-002, -2.069984e-002, -1.555209e-002, 2.376969e-002, -1.438006e-002, -2.718640e-002, -3.287598e-002, -1.433435e-002, -5.592924e-002, -1.785561e-002, 6.793433e-002, 3.382243e-002, -3.676580e-002, -7.001842e-002, -1.337196e-002, 2.844441e-002, 1.066185e-001, 4.820672e-002, 1.165149e-002, -6.225406e-003, 5.502549e-003, -3.587229e-002, -3.790433e-002, 2.253914e-002, -3.196031e-002, -1.771357e-003, -7.569706e-003, -4.152343e-002, -3.188253e-002, -5.071469e-002, -1.967043e-002, 5.435550e-002, -1.181321e-002, 6.694467e-002, 8.456416e-004, -8.458417e-002, -8.301399e-002, -1.036337e-001, -5.494739e-002, 1.988411e-002, 4.171561e-002, 1.140923e-002, 2.772055e-002, 2.349197e-002, 1.555797e-002, -3.790955e-002, -2.845048e-002, -1.779635e-002, 1.945262e-003, -6.212654e-003, -2.802761e-002, 4.870280e-002, -3.841567e-002, -1.943959e-002, 3.785101e-002, 1.739778e-002, -1.490648e-002, 2.870881e-002, -6.948791e-002, -5.173904e-002, -2.580720e-003, -1.126196e-002, -2.768824e-002, -1.183288e-002, 6.064002e-003, 4.129932e-002, 3.235383e-003, 3.408650e-002, 6.419223e-002, 1.633455e-002, -4.509027e-002, -3.390462e-002, -3.563286e-002, -4.813658e-002, 5.669049e-002, -4.661475e-002, 9.426160e-003, 2.795738e-002, 8.054949e-002, 6.668264e-002, 3.956256e-002, -6.053102e-002, -4.258774e-002, -2.569823e-002, -1.320071e-002, -6.334918e-003, -1.684076e-002, 1.032992e-002, 3.603950e-002, -2.204287e-003, 3.285293e-002, -3.833345e-002, 2.146627e-002, 1.054245e-003, -3.684563e-002, 4.472082e-002, 6.153570e-002, 2.779145e-002, 4.115826e-002, 2.588818e-002, 3.048803e-002, 4.861147e-002, 7.102156e-003, -1.412356e-002, -3.206742e-003, -6.252643e-003, -7.007592e-003, -7.934394e-003, 2.287117e-002, 2.290308e-002, 3.650511e-002, 2.914845e-002, 8.154827e-002, -1.616764e-002, -4.676568e-002, -1.335965e-002, -

© ISO/IEC 2004 — All rights reserved


Copyright International Organization for Standardization
Provided by IHS under license with ISO
No reproduction or networking permitted without license from IHS
Not for Resale

2.118615e-002, -4.227185e-002, 6.440723e-002, -7.880545e-003, -3.347221e-002, 7.523075e-002, 1.122964e-001, 1.826377e-002, 3.649012e-002, -9.975123e-003, 3.353259e-004, -5.690428e-003, 1.901412e-003, 2.628781e-003, 1.398344e-002, 1.070003e-002, -4.403632e-003, 1.605935e-002, 2.805373e-002, 3.287302e-002, 6.675745e-002, 2.470492e-002, 7.216806e-003, 6.101743e-002, 1.404626e-002, 1.356972e-002, 1.974346e-002, -4.195301e-002, 1.025796e-002, 1.127299e-002, 2.083497e-002, 1.869171e-004, -6.261432e-003, 6.741379e-003, 8.434265e-003, 7.472516e-004, 6.228528e-003, 1.259879e-002, 8.822774e-004, 8.695317e-003, 3.491502e-002, 2.608512e-002, 2.007828e-002, -1.101511e-002, 2.269609e-002, -2.960257e-002, -3.762627e-002, -3.841463e-003, -4.086786e-002, 2.003643e-002, 1.305330e-002, 3.016754e-002, 2.831889e-002, 1.282646e-002, -4.880481e-003, -3.566114e-003, -7.042882e-003, 1.367606e-002, 9.583890e-003, 1.316537e-002, 1.243268e-002, -5.262140e-003, 2.399004e-002, -1.597053e-003, 1.305708e-002, 1.391105e-002, 2.732786e-002, 4.864587e-002, -1.496430e-002, -1.898494e-002, 5.140333e-002, -2.253763e-002, 4.327806e-002, -1.414551e-002, -1.414551e-002, 4.327806e-002, -2.253763e-002, 5.140333e-002, -1.898494e-002, -3.601817e-002, 1.854288e-002, -1.951802e-002, -9.074211e-002, -1.055379e-001, -1.457469e-003, -1.080229e-002, -6.344734e-004, -8.521054e-003, 2.959176e-002, -2.560866e-002, -3.221879e-002, 1.647301e-002, 1.548970e-002, 4.356604e-002, 5.142820e-002, 3.584794e-002, -2.425353e-004, 1.741659e-002, 2.076676e-002, 2.741850e-002, -1.655861e-002, 2.200361e-002, 9.656586e-002, 4.847645e-002, -2.103287e-002, 6.718152e-003, 6.005009e-004, 9.327631e-003, 1.015413e-002, 1.958565e-002, 3.233554e-002, 1.395489e-002, -6.354677e-003, -1.280387e-002, 7.168809e-002, -8.165676e-003, -2.628502e-002, -4.948704e-003, 1.902425e-003, 6.593184e-003, 1.682659e-002, 7.109544e-003, -1.056005e-002, -2.246515e-002, -2.498729e-002, 5.724606e-002, 2.797669e-002, 3.095849e-003, -7.377118e-003, 3.907419e-003, 6.249021e-003, 1.534409e-002, 8.777642e-003, -3.435552e-002, -2.749875e-002, -1.850352e-002, 3.238020e-002, 2.599457e-002, 1.200576e-002, 2.686841e-003, 2.632659e-003, 2.798642e-003, 6.279844e-003, 8.835368e-003, -8.254616e-003, 1.059206e-002, -1.474041e-002, -2.847652e-002, -1.071646e-002, -1.637421e-002, -3.979555e-004, -3.979555e-004, -1.637421e-002, -1.071646e-002, -2.847652e-002, -1.474041e-002, -2.172734e-002, 6.920753e-002, 4.772233e-002, -3.608027e-003, 1.108032e-003, 3.286343e-002, -2.408238e-002, -1.727303e-002, 8.580216e-002, 4.604994e-002, -5.582810e-002, 3.156187e-003, -6.509807e-002, -2.213723e-002, -3.034359e-002, -1.902997e-002, -1.764890e-002, -5.359482e-002, -2.271430e-002, -3.002553e-002, 3.233776e-002, -2.006710e-002, 9.140110e-002, 8.891431e-003, 2.223154e-002, 2.500547e-002, 2.367714e-002, 1.087535e-002, 1.578844e-002, -3.999474e-002, -2.312386e-002, 1.362219e-001, -1.872480e-003, -8.149248e-002, -2.798502e-002, 1.247108e-002, 1.018348e-002, 1.682619e-002, 5.861208e-003, 1.211577e-002, 2.363677e-003, 3.045483e-002, 6.948197e-002, -1.170937e-001, 3.897036e-002, -7.548885e-003, 1.178628e-002, 2.770715e-003, 1.078712e-002, 2.353159e-003, 1.183188e-002, 1.996554e-002, 3.175400e-002, 2.324273e-002, 8.133022e-003, 1.855440e-002, -1.093199e-002, 1.959489e-002, 7.089887e-004, 6.432532e-003, 4.772038e-003, 1.062754e-002, 1.258595e-002, 1.599509e-002, 3.437931e-002, 2.863975e-003, 1.389344e-002, -1.431085e-003, 1.956706e-002, 6.053335e-003, -9.245870e-003, -4.580619e-003, -4.580619e-003, -9.245870e-003, 6.053335e-003, 1.956706e-002, -1.431085e-003, 7.925213e-002, -4.684180e-002, 6.545738e-002, 1.268856e-002, 1.543236e-002, 7.774256e-003, 1.656087e-002, 2.680143e-002, -6.841896e-003, 3.738219e-002, 4.327548e-002, -1.549992e-002, -1.078248e-001, -1.678116e-002, 4.114591e-002, 2.609678e-002, 6.857857e-003, -1.640003e-002, -2.486944e-002, 3.583110e-002, 2.434525e-002, -6.056826e-002, -1.013229e-001, 7.438316e-002, -2.414464e-002, 5.478080e-003, 2.237614e-002, 9.395721e-003, -7.852103e-003, 1.211289e-003, -3.880264e-002, -1.557119e-001, 1.117406e-001, -2.840519e-002, 5.064154e-002, -1.905681e-002, -1.720268e-002, -2.260523e-003, -3.694610e-003, -7.271477e-003, -1.163033e-002, 3.845439e-003, -2.987144e-002, 1.374968e-002, 4.359023e-002, 7.287343e-002, 1.158208e-002, 5.414780e-004, 4.388527e-004, -5.025933e-003, 4.020059e-005, 1.144089e-003, -1.719849e-002, 2.513156e-002, 9.772945e-003, 2.995733e-003, 3.424895e-002, 1.704118e-002, 5.035334e-004, -7.791866e-003, -3.012003e-003, -2.503706e-003, -1.310906e-004, 1.817309e-002, 2.269962e-003, 2.662617e-002, -9.382997e-003, -6.161878e-004, 3.451988e-002, 4.719910e-003, 5.488828e-003, -5.056097e-002, -5.056097e-002, 5.488828e-003, 4.719910e-003, 3.451988e-002, -6.161878e-004, 8.049366e-003, 1.218157e-002, -3.653731e-002, -1.184656e-001, -6.047838e-002, -3.832052e-002, -3.690173e-002, -1.853797e-002, 1.129449e-002, 9.308367e-002, 2.272721e-002, -4.519837e-002, 1.437182e-002, 2.235157e-002, 4.038025e-002, -2.238054e-002, -2.847093e-002, 3.591299e-003, 3.946694e-002, 8.591378e-002, 7.510926e-002, -2.055239e-002, -6.126612e-002, -4.290959e-004, 1.785400e-002, -1.301432e-002, 2.385963e-002, 1.603633e-002, 9.886992e-003, 4.220049e-002, 4.280926e-002, 1.809889e-002, -1.260103e-002, -7.448378e-002, 3.279678e-002, -2.692356e-002, -3.132909e-003, -1.141259e-002, -2.943724e-003, 1.215884e-002, 3.529814e-002, 2.653098e-002, -5.283203e-003, 1.463059e-002, 3.279687e-002, 2.681045e-002, 3.014547e-002, -1.650351e-003, -8.999576e-003, -2.283735e-003, 1.577395e-002, 1.676781e-002, 4.228977e-003, -1.542288e-002, 1.869545e-002, 5.414749e-003, 1.100765e-002, 1.128427e-002, -2.539722e-003, -8.891394e-003, 2.882092e-003, 7.834750e-003, 1.153384e-002, 3.408270e-003, 2.490480e-002, 1.688537e-002, 9.996243e-003, 5.215708e-002, -8.125519e-003, -8.125519e-003, 5.215708e-002, -4.811702e-002, -1.331300e-002, 1.913203e-002, -


© ISO/IEC 2004 — All rights reserved

--`,,```,,,,````-`-`,,`,,`,`,,`---
Copyright International Organization for Standardization
Provided by IHS under license with ISO
No reproduction or networking permitted without license from IHS
Not for Resale

2.512503e-003, 1.507086e-002, -2.045571e-002, 2.871502e-002, -3.030340e-002, -5.392780e-004, 6.320920e-003, 5.958778e-002, 9.862216e-003, 5.777543e-004, 5.777543e-004, 9.862216e-003, -9.095831e-002, 3.858999e-002, 7.332592e-003, 3.932597e-003, 1.698004e-002, 1.350430e-003, 2.991079e-002, -4.340644e-003, 8.775517e-004, 2.544801e-003, -8.707505e-002, 9.157154e-002, 2.996048e-002, 2.996048e-002, 9.157154e-002, -1.235648e-001, 3.478783e-002, 1.010285e-002, 2.066777e-002, 7.769548e-002, -1.431296e-002, 7.804665e-003, 3.502221e-003, 1.348362e-002, 4.043422e-002, -2.638124e-003, 1.865417e-002, 6.071971e-003, 6.071971e-003, 1.865417e-002, 2.768782e-002, 1.027885e-002, -1.065194e-002, -1.976289e-002, -9.107967e-003, 1.604661e-002, 1.302972e-002, -4.285207e-003, -1.006273e-002, 3.067070e-002, -4.333781e-002, -4.342139e-002, -4.527739e-002, -4.527739e-002, -4.342139e-002, 1.385120e-001, 7.486163e-002, 1.077753e-002, 1.814211e-002, 4.878058e-002, 4.762951e-002, 2.682572e-002, 1.278648e-002, 8.796542e-003, 3.084733e-002, -4.121052e-002, -4.078372e-002, -2.750806e-004, -2.750806e-004, -4.078372e-002, 5.817019e-002, 2.365535e-002, -2.045033e-003, 2.497945e-003, -2.735059e-002, 3.866581e-002, 3.223766e-003, 2.705439e-003, 8.836237e-003, -5.456539e-003, 1.040782e-001, -4.689667e-002, -2.365664e-002, -2.365664e-002, -4.689667e-002, 4.156245e-002, -8.431502e-003, -1.590480e-003, -4.090223e-003, -2.011272e-003, -2.254571e-002, -4.311973e-003, 1.795011e-003, 4.107881e-003, -1.759957e-003, -3.772930e-003, 9.178351e-002, 4.838223e-002, 4.838223e-002, 9.178351e-002, 7.775541e-002, -7.163064e-003, 7.822103e-003, -1.239801e-002, 1.960988e-002, 3.222617e-002, 2.696524e-003, 6.733776e-003, -1.477993e-003, 1.778727e-002, 4.357330e-002, 3.784639e-003, -6.513668e-002, -6.513668e-002, 3.784639e-003, 4.513187e-002, 2.258450e-002, 9.912151e-003, -8.468930e-003, 1.985792e-002, 8.376202e-003, 9.102237e-003, 3.672163e-003, -7.051035e-003, -1.939990e-002, -3.031728e-002, -2.821464e-002, -1.463410e-003, -1.463410e-003, -2.821464e-002, 7.903629e-002, 3.342030e-002, 1.681632e-002, 8.043554e-003, 2.550440e-002, -9.148966e-003, 9.757198e-003, 7.276152e-003, 2.666774e-003, -1.406278e-002, 5.158136e-002, -4.282217e-002, -2.042614e-002, -2.042614e-002, -4.282217e-002, 8.689914e-002, 2.368577e-002, 1.595343e-002, 1.343698e-002, 4.480336e-002, -1.548033e-002, -1.060475e-002, 1.453588e-003, 1.539645e-002, 4.630438e-003, -9.697233e-003, -2.661228e-002, -2.418645e-002, -2.418645e-002, -2.661228e-002, 4.161466e-002, 2.465776e-002, -3.882363e-003, 1.617473e-003, 1.830493e-002, 6.323536e-003, 2.038764e-003, -7.963802e-003, -4.496759e-003, 5.251082e-003, -2.709944e-002, -2.446922e-002, 2.874739e-002, 2.874739e-002, -2.446922e-002, -7.976360e-002, -6.350554e-002, 8.095973e-003, -5.765975e-003, -6.806630e-002, 7.437896e-003, -3.134122e-002, -1.722506e-002, -6.216522e-003, -1.446188e-002, 2.773686e-002, 3.569040e-002, 7.445314e-003, 7.445314e-003, 3.569040e-002, 5.217837e-002, -3.972511e-003, 2.474699e-003, 7.732159e-003, 1.019009e-002, 3.432593e-002, 1.442422e-002, 2.506982e-003, 2.994170e-003, -7.836911e-003, -4.852933e-002, 6.992027e-002, 3.485070e-002, 3.485070e-002, 6.992027e-002, 2.001764e-002, 2.008778e-002, 1.505335e-002, 6.917130e-003, 1.391863e-002, -1.762809e-003, 1.464518e-002, 8.912538e-003, 8.088607e-003, 9.272395e-003, -2.737790e-003, 1.979142e-002, 9.451808e-003, 9.451808e-003, 1.979142e-002, 2.023099e-002, -4.937495e-002, -3.455353e-002, 6.954379e-003, 9.037656e-003, 3.560614e-002, -1.228557e-002, -1.507073e-002, 1.834373e-002, -3.215530e-003},
{5.021356e-005, -1.540796e-004, -2.931079e-003, 2.588323e-004, -1.869980e-002, 5.937751e-003, 6.739477e-003, -5.559388e-004, 1.658277e-002, 2.235991e-002, -2.401504e-003, 2.080433e-002, -2.401504e-003, 2.235991e-002, 1.658277e-002, -5.559388e-004, 6.739477e-003, 5.937751e-003, -1.869980e-002, 2.588323e-004, -2.931079e-003, -1.540796e-004, 2.214584e-002, -1.177668e-002, -1.157467e-002, -2.020096e-003, -3.157776e-003, 2.867505e-002, 4.905342e-003, -5.144912e-002, 5.677539e-003, -2.367194e-002, 1.149428e-004, -1.927589e-002, 6.408203e-002, -1.683481e-002, -4.702244e-002, 1.539161e-002, -2.595303e-002, 1.176954e-002, -1.167439e-004, 1.029507e-003, 1.164046e-002, 7.550670e-003, -1.239607e-002, 2.844925e-002, 6.719218e-003, -5.417472e-002, 3.208997e-002, -3.328708e-003, 1.950180e-002, 1.815624e-003, 1.972804e-002, -2.152633e-002, -8.825433e-003, 1.618452e-003, -1.675878e-002, 5.793477e-002, 1.804783e-002, -3.160770e-003, 1.922118e-002, 3.535585e-002, -1.877704e-002, -6.970282e-002, 7.397167e-003, 2.330420e-004, 2.190072e-004, -2.495686e-002, -1.689695e-002, -1.311505e-002, -2.150551e-002, -4.171340e-002, -3.002234e-002, 2.173317e-002, 7.254209e-002, 2.604951e-002, 7.460523e-002, -1.962921e-002, 2.123796e-002, -1.603497e-002, 5.507192e-002, -6.703655e-002, -2.735965e-002, -7.224280e-002, -2.955509e-002, -2.728246e-002, -1.350567e-002, -4.916342e-003, -2.060199e-004, -5.406036e-003, -2.200680e-002, 4.463063e-002, -2.834818e-002, -1.134147e-002, -6.486096e-002, 3.594293e-002, -1.951876e-003, 5.081742e-002, 1.018612e-002, -5.354838e-003, 8.830918e-003, -6.239261e-002, -2.275004e-002, -2.179706e-002, -2.939051e-002, 2.710358e-002, -2.242375e-002, 2.525044e-002, -5.168757e-002, 6.638376e-003, 4.742030e-002, 1.884581e-002, 2.661361e-002, 3.672308e-002, -2.452058e-002, 4.338816e-002, -2.123450e-002, -4.055287e-002, 1.412731e-002, -3.636733e-002, -6.651769e-003, 4.831430e-002, 6.745517e-002, -1.674208e-002, 4.050927e-002, 7.433445e-002, 7.892023e-002, 1.696500e-002, -4.359399e-002, 3.499280e-002, -3.528090e-002, -2.376504e-002, -1.860535e-002, 1.986125e-002, -4.729067e-003, -4.098813e-002, -2.749543e-002, -2.682430e-003, 4.365811e-002, 2.264889e-002, -7.449250e-002, -3.045503e-002, -4.458057e-003, 6.697224e-003, -1.889954e-003, 6.798451e-003, -2.046103e-002, -2.085851e-002, 1.033736e-003, 4.553530e-002, -3.437734e-002, 1.876737e-002, -

© ISO/IEC 2004 — All rights reserved


--`,,```,,,,````-`-`,,`,,`,`,,`---

Copyright International Organization for Standardization
Provided by IHS under license with ISO
No reproduction or networking permitted without license from IHS
Not for Resale

8.319163e-003, -1.963105e-002, -6.904285e-002, 4.859919e-002, 2.825653e-002, -3.437380e-002, 9.315299e-003, 1.438586e-002, 1.403260e-002, -4.142216e-002, -5.028444e-002, -1.839196e-002, -3.510125e-002, -4.817451e-003, -2.048634e-002, -2.871292e-002, 3.756934e-004, 1.097607e-001, 3.701115e-002, 8.334983e-002, -1.016398e-002, 6.824965e-002, -2.218436e-003, -1.402909e-002, 4.617314e-002, 3.510619e-003, -8.746106e-003, 5.387784e-003, -6.417497e-003, 4.068481e-003, -2.756220e-002, 2.261125e-002, 1.249713e-002, -3.468361e-002, -3.603524e-002, 7.203061e-003, 9.997321e-003, -2.951057e-002, -4.573732e-003, 3.742529e-002, 4.173773e-002, 3.621578e-002, -3.495631e-002, 8.893079e-003, -4.934678e-002, 1.187304e-002, 4.115915e-002, -4.720172e-002, -2.275211e-002, 2.644040e-003, 7.713910e-002, 1.454536e-002, -4.718258e-002, -4.237460e-002, -3.302745e-002, -3.304444e-002, -1.770868e-002, -1.146794e-002, -5.435693e-004, -1.350783e-002, -9.417364e-003, -2.319490e-002, -3.850134e-002, 5.510546e-002, -2.420509e-002, -3.536142e-002, -9.552242e-002, -6.759526e-002, 5.884205e-002, -1.661461e-002, -2.007899e-002, -6.046263e-003, 4.769014e-003, 3.160228e-002, 5.362599e-002, 2.173262e-004, -2.843196e-002, -5.262129e-002, -5.075612e-002, -1.687496e-002, -2.700524e-002, -2.511118e-002, -7.532396e-003, 1.119496e-002, 1.564755e-002, 1.127305e-002, -6.383854e-004, -6.484487e-002, -3.919442e-002, -1.485236e-002, -1.847780e-002, -1.754054e-002, -3.077944e-002, -1.105234e-002, 1.387261e-002, 3.966609e-002, 2.368042e-002, 1.273753e-002, -6.162171e-003, -2.899863e-002, -2.185203e-002, -7.554633e-003, -8.701262e-003, -5.220682e-003, 8.418582e-003, 2.667981e-002, -7.045857e-003, 4.364247e-002, -1.309776e-003, -6.139167e-002, -1.434630e-002, 2.460166e-002, 3.717237e-002, 2.137863e-003, 1.391951e-002, -1.833160e-002, -1.920271e-002, 3.156024e-002, 2.039202e-003, 2.877879e-002, -4.330620e-003, 1.106070e-002, -1.256720e-002, -2.992952e-003, 9.993718e-003, 1.597081e-002, 9.189748e-003, 1.399232e-002, 8.659278e-003, 4.954860e-002, 1.235017e-002, 2.015109e-002, 8.601479e-003, 2.062426e-002, 1.314968e-002, -1.854270e-002, -3.992909e-002, 8.779309e-003, 6.902092e-003, 4.875098e-002, 4.532485e-002, 4.084467e-003, 9.059740e-003, 1.315016e-002, -7.743822e-003, 7.926222e-003, 1.180870e-002, 2.342298e-002, 1.605932e-002, 2.130403e-002, 5.216352e-002, 2.300944e-002, 6.627077e-003, 8.673342e-002, 5.706472e-002, -2.377841e-002, 1.796168e-002, -8.235025e-003, -3.713798e-003, 3.647063e-002, -2.858041e-003, -2.169727e-002, -2.169727e-002, -2.858041e-003, 3.647063e-002, -3.713798e-003, -8.235025e-003, -5.997256e-002, 1.463681e-002, -2.046639e-002, 9.713337e-002, 6.922927e-005, 4.650221e-002, 1.414032e-002, -1.117577e-003, 4.656458e-003, -1.265965e-002, -2.335096e-002, 7.153674e-002, -7.337833e-002, -3.873160e-002, -3.211481e-002, -2.927298e-002, -1.986470e-002, 5.738217e-003, -6.726724e-003, 1.340234e-003, 2.230585e-002, 6.102401e-002, -1.067793e-001, 5.770450e-002, 1.365632e-002, 2.356536e-002, -2.548292e-002, 4.560832e-003, 1.590218e-004, 1.173116e-002, 9.165540e-003, 7.317786e-002, 8.114435e-002, -9.042720e-002, -2.927622e-002, -5.513491e-002, -9.113564e-003, -1.420957e-002, -1.702624e-002, 2.800825e-003, 1.109537e-002, 1.942961e-002, 5.780781e-002, 3.218815e-002, -5.829001e-002, 1.426462e-002, 7.170489e-003, -6.886287e-004, -1.745483e-002, -2.297465e-002, 1.919417e-003, 1.200484e-002, 1.282774e-002, 2.230922e-002, 7.281626e-002, 8.563096e-003, 8.746979e-003, -7.540332e-004, -5.098457e-003, -7.920735e-003, -4.821655e-003, 6.799222e-003, 9.146470e-003, 7.686390e-003, 2.172870e-002, 7.788352e-002, -1.277375e-002, -1.072121e-002, -1.689581e-002, 4.016225e-002, -1.276980e-003, 2.038017e-003, 2.038017e-003, -1.276980e-003, 4.016225e-002, -1.689581e-002, -1.072121e-002, -4.869510e-003, -3.440167e-002, -3.793695e-002, 9.310741e-002, 2.553363e-002, -6.717890e-003, 5.900132e-003, 2.588924e-002, 6.089810e-002, -5.450281e-002, 9.377000e-002, -8.831529e-002, 3.110489e-003, -5.362944e-002, -2.413582e-002, -2.809182e-002, -2.704070e-002, -2.557673e-002, 1.240108e-002, -4.321260e-002, -1.579371e-002, -4.435414e-003, 5.078235e-002, -5.941180e-002, 4.886357e-002, 7.594437e-003, -4.689121e-003, -1.041840e-002, 7.999171e-003, 1.494808e-002, 7.248276e-002, -9.712017e-002, 6.022717e-002, -9.306554e-002, -3.748476e-003, 3.944123e-002, 1.453224e-002, 4.271403e-003, 2.422588e-003, 2.488717e-003, -1.190016e-002, 3.605148e-002, -5.959743e-002, -1.173872e-001, -1.413849e-002, 4.489797e-002, 9.854768e-003, 4.858571e-003, -2.604650e-004, 1.378404e-003, -6.875154e-003, -1.255875e-002, -3.900752e-003, -4.246606e-002, -4.140236e-003, 9.031649e-003, 2.696106e-002, 6.469895e-003, -4.353911e-004, -3.326723e-003, -4.758704e-003, 6.738088e-003, -4.710331e-003, -4.538683e-004, -5.900582e-003, 3.661832e-003, -4.318832e-003, 3.881245e-003, 2.823949e-002, -1.542779e-002, 2.727051e-002, -2.452720e-002, -2.452720e-002, 2.727051e-002, -1.542779e-002, 2.823949e-002, 3.881245e-003, 2.989836e-002, -9.889240e-003, -2.964086e-002, 6.292439e-002, 3.191196e-002, -4.414979e-003, -9.909055e-003, -3.664641e-002, -6.652268e-002, -5.840382e-003, -1.178027e-002, -3.024258e-002, -2.036176e-002, -1.894865e-002, -2.294794e-002, 2.477990e-002, 1.310335e-002, 7.989363e-003, 6.232095e-002, 2.181724e-002, 1.256521e-002, 1.266974e-001, -2.391334e-002, -3.193520e-002, -5.279759e-002, -3.165379e-002, -1.868431e-002, -6.950393e-003, -9.116791e-005, 1.990261e-003, 1.617588e-002, -7.515433e-003, -4.537307e-002, -7.160220e-002, -4.020025e-002, 2.782485e-002, -1.583816e-002, -2.215917e-002, -2.398150e-002, -3.707674e-003, -9.018904e-004, 2.521147e-002, -1.667176e-002, -5.285850e-002, -2.660784e-002, -2.469110e-002, 4.606753e-003, 1.570057e-002, -8.650046e-003, -2.701733e-002, -1.044550e-002, -6.012836e-003, -6.765598e-003, -1.370915e-002, -6.730211e-002, -5.594100e-002, -1.638468e-002, 4.995836e-003, 8.386336e-003, 1.027034e-002, -5.533660e-003, -2.218919e-003, 2.059754e-005,


© ISO/IEC 2004 — All rights reserved

Copyright International Organization for Standardization
Provided by IHS under license with ISO
No reproduction or networking permitted without license from IHS
Not for Resale

4.069970e-003, 1.877404e-003, -3.088883e-002, -8.188928e-004, 1.264790e-002, -2.170798e-002, 1.476785e-002, 3.174706e-002, -3.963141e-002, -3.963141e-002, 3.174706e-002, 1.476785e-002, -2.170798e-002, 1.264790e-002, -2.908901e-002, -1.272241e-004, 7.433466e-002, -4.630335e-002, -3.596692e-002, -8.186726e-003, -6.923958e-003, -1.803245e-003, -1.037490e-001, 8.933867e-002, -3.822172e-002, 1.448769e-001, 1.041843e-001, 1.491779e-002, 1.190583e-002, 5.218955e-002, 3.532070e-002, -1.535236e-002, -8.416831e-003, -4.008198e-002, -4.185404e-002, -1.322827e-002, 1.062672e-001, -7.641042e-002, 5.564757e-002, 1.853691e-002, -9.891899e-003, 6.691322e-003, -1.070296e-002, -3.541133e-002, -2.408718e-002, -1.982634e-002, -4.878399e-002, -3.720967e-002, -9.486035e-002, 6.181969e-003, 9.981802e-003, 1.689498e-002, -7.178889e-003, -1.508104e-002, -1.959502e-002, 6.798635e-003, 4.270746e-002, -3.028052e-002, -1.614450e-002, -3.112137e-002, -5.267957e-003, 7.639366e-003, -5.160282e-003, -3.493018e-003, -1.417065e-002, -2.868985e-003, 1.133848e-002, 9.779653e-003, -5.493807e-002, -1.045448e-002, -2.784852e-002, -7.591661e-003, 1.367583e-002, 6.581706e-003, -2.109642e-003, -6.796139e-003, 1.668885e-002, 2.545626e-002, 8.240430e-003, -1.925175e-002, 2.440596e-002, -2.727139e-002, -6.183543e-003, -6.183543e-003, -2.727139e-002, 3.955323e-002, 1.164547e-001, 5.192968e-002, 1.606803e-002, 6.961397e-002, -4.869069e-003, 3.358196e-002, -1.066352e-003, 6.699012e-003, 3.490251e-002, 3.244713e-002, 1.620161e-001, 6.988937e-002, 6.988937e-002, 1.620161e-001, 2.109087e-002, -2.730235e-002, -6.232997e-003, -2.394532e-003, -1.306202e-002, -9.933546e-003, -2.691842e-002, -1.030934e-002, -2.326204e-003, 1.295433e-002, -6.003207e-002, 3.609430e-002, 2.761804e-002, 2.761804e-002, 3.609430e-002, 5.591548e-002, -2.431292e-002, -1.069213e-002, -8.609630e-003, -3.749918e-002, -9.001608e-004, -3.167195e-003, -2.379930e-003, -3.376201e-003, -2.983128e-002, 3.838454e-003, -2.831783e-002, -1.841789e-002, -1.841789e-002, -2.831783e-002, -3.901783e-002, 2.952407e-002, 7.150840e-003, 7.576142e-002, 9.613323e-002, -3.154450e-002, 1.401590e-002, 3.475419e-003, 9.563997e-003, -1.837096e-002, 1.955944e-002, 4.690024e-002, 2.254382e-002, 2.254382e-002, 4.690024e-002, 2.387606e-002, -5.532345e-002, -4.527801e-002, -4.035219e-003, -9.249281e-003, -7.262283e-003, -1.966680e-002, -1.065525e-002, 3.268941e-003, -6.385134e-003, -5.845084e-002, 1.472077e-002, 1.766084e-002, 1.766084e-002, 1.472077e-002, 9.798202e-002, -2.374233e-003, 1.055463e-002, 7.350505e-003, 2.107992e-002, -2.604811e-003, 4.378795e-003, -3.272598e-003, -1.768241e-004, 3.243266e-002, 1.079181e-002, -4.474407e-002, 1.399000e-002, 1.399000e-002, -4.474407e-002, 9.092759e-002, 3.706981e-003, 1.188351e-002, 8.345632e-003, 4.107527e-004, -1.608169e-002, 3.340703e-002, 2.283051e-003, -3.238927e-004, -8.650122e-003, 3.262806e-002, 2.968480e-002, -4.713337e-003, -4.713337e-003, 2.968480e-002, 2.269494e-003, 4.060649e-004, 3.512408e-003, -4.079523e-002, -4.418222e-002, -5.389931e-003, -2.555286e-003, 1.312129e-003, -1.567628e-002, -2.855299e-002, -4.294446e-002, -4.842189e-002, -3.906064e-002, -3.906064e-002, -4.842189e-002, 6.067859e-003, -8.461557e-003, -1.039235e-002, 2.083009e-002, 1.466377e-002, 2.142493e-004, -1.643084e-003, -5.585240e-003, -2.905347e-003, -3.626825e-003, 4.449191e-002, -4.449668e-002, 4.886442e-003, 4.886442e-003, -4.449668e-002, 3.290635e-002, -4.754913e-002, -1.563341e-003, -6.699482e-003, -4.706446e-003, -6.377279e-002, -2.351467e-003, -1.044422e-002, 1.468096e-004, -1.288615e-002, -2.146186e-002, -3.322719e-003, 1.424438e-002, 1.424438e-002, -3.322719e-003, 5.912615e-002, -7.077592e-003, -2.763981e-003, -4.717354e-003, -6.043633e-002, -6.172829e-002, -1.016815e-002, -5.198638e-003, -9.526595e-003, -1.170418e-002, -6.592459e-003, 3.989093e-005, -1.003291e-001, -1.003291e-001, 3.989093e-005, -2.192298e-002, -7.677334e-003, 1.418724e-002, -1.414769e-002, -3.151151e-002, 1.153778e-002, -3.317052e-003, -2.738182e-003, -4.140229e-003, -5.316921e-003, -2.332009e-002, 1.108453e-002, 2.377327e-002, 2.377327e-002, 1.108453e-002, 2.802105e-002, 5.796302e-002, 2.955086e-002, 4.582352e-002, 1.035988e-001, 8.046718e-003, 4.512505e-002, -1.290312e-002, 9.291515e-003, 2.169068e-002, 1.745380e-002, -3.418617e-002, -2.360255e-002, -2.360255e-002, -3.418617e-002, -4.702908e-002, -1.181606e-002, -1.147298e-003, -1.117154e-002, -2.754864e-002, -4.061777e-002, -1.179925e-002, -5.629270e-003, -4.234998e-003, -3.830795e-003, 1.569642e-002, 8.953504e-003, 1.930719e-002, 1.930719e-002, 8.953504e-003, 4.735688e-002, 1.756622e-002, 1.043247e-002, 3.255744e-003, 1.072708e-002, -2.553506e-002, 2.210465e-002, 2.305526e-003, -2.053041e-003, -7.236805e-003, 1.153900e-002, 2.322945e-002, 3.454737e-002, 3.454737e-002, 2.322945e-002, -3.205226e-002, 5.452267e-002, 2.645732e-002, -1.604066e-002, 2.139787e-002, -1.910525e-002, 5.097179e-003, 4.685690e-004, -6.660720e-003, 3.275368e-002},
{1.079796e-004, -5.598795e-003, 2.686817e-003, -1.991376e-003, -1.709047e-002, 5.002078e-003, -2.892595e-003, 6.809382e-003, 4.624242e-003, 7.654790e-003, -2.549552e-003, 6.962288e-003, -2.549552e-003, 7.654790e-003, 4.624242e-003, 6.809382e-003, -2.892595e-003, 5.002078e-003, -1.709047e-002, -1.991376e-003, 2.686817e-003, -5.598795e-003, -1.573886e-002, -2.094652e-002, -1.557493e-002, 2.331861e-003, -7.504482e-003, 1.225712e-002, 3.434911e-002, -2.995246e-002, 4.818956e-002, 3.978928e-003, -6.190450e-002, -4.073928e-002, 8.851220e-002, -4.114501e-002, 1.610947e-002, -5.548533e-002, -2.886216e-003, 4.723313e-003, 1.542917e-003, -2.045485e-002, -2.684812e-002, 2.698030e-005, 1.813260e-002, -6.816645e-004, -1.263253e-002, -8.250377e-003, 3.574433e-004, -1.974504e-002, 5.574304e-002, -5.856484e-002, 5.062612e-002, -1.084624e-001, 7.226035e-002, -3.667655e-002, 3.281588e-003, 2.472037e-002, 4.929018e-002, -4.013915e-002, 6.147085e-003, -1.841825e-002, -3.250546e-002, -4.229744e-002, -

© ISO/IEC 2004 — All rights reserved


Copyright International Organization for Standardization
Provided by IHS under license with ISO
No reproduction or networking permitted without license from IHS
Not for Resale

5.528949e-002, 2.228439e-003, 1.798554e-002, -4.047293e-003, 6.605698e-003, -2.052706e-002, -1.132159e-003, -1.799851e-003, -4.028868e-002, -7.521091e-003, -3.179990e-002, -2.925608e-002, -1.856446e-002, 3.996945e-002, 1.087211e-001, 5.190033e-002, 1.920292e-002, 5.068302e-002, 5.954097e-002, -5.598980e-003, -1.048045e-002, 9.548945e-003, -4.445681e-002, 1.973450e-002, -6.322963e-002, -2.301122e-003, -1.515503e-002, -2.348735e-002, 1.183892e-002, -1.494084e-002, 3.246574e-003, -1.986168e-003, 2.649794e-002, 5.674811e-003, -5.622728e-002, 5.661918e-003, -1.607967e-002, -1.867373e-002, -3.815269e-002, 4.552747e-002, 6.822427e-003, -4.703117e-002, 4.282746e-002, -1.468806e-003, 2.729997e-002, -3.242801e-002, 4.484430e-002, -2.180030e-003, -1.989165e-002, -3.667946e-002, -1.292826e-002, 3.556488e-002, 5.292132e-002, 3.216395e-002, -7.790254e-002, 2.027322e-002, -1.830726e-002, -2.072463e-002, 4.924056e-002, -2.461107e-002, -6.731128e-002, -3.393182e-002, -4.099207e-002, -8.700105e-002, 7.373800e-002, 1.099637e-002, -3.699422e-002, 6.316362e-002, 6.677787e-003, -1.347449e-002, -1.409667e-002, -2.503380e-002, -4.711723e-002, -8.416579e-003, 2.527216e-002, -4.128768e-002, 1.203650e-002, -6.301266e-002, -4.179018e-002, 2.941271e-002, 3.896435e-002, -2.326934e-002, -7.506777e-002, -1.421719e-002, -4.399330e-002, -3.484016e-002, -2.168646e-003, -4.017040e-003, -2.347559e-002, 3.603255e-002, -2.265005e-002, -1.741665e-002, -5.363514e-003, -3.277507e-002, 2.814985e-002, 5.685089e-003, -3.350890e-002, 4.558530e-003, 2.627095e-002, -1.548197e-002, 1.123144e-002, 8.428462e-003, -3.700531e-002, -2.811006e-002, -5.461023e-002, -3.504962e-002, -3.658814e-002, 3.063161e-003, 8.269965e-002, 5.302416e-002, 2.871710e-002, 1.908921e-002, 2.601643e-003, 1.409304e-002, 5.124673e-002, -5.092861e-002, 4.466229e-002, 2.105511e-003, -5.141140e-002, 6.119593e-003, -6.965910e-004, 9.628953e-003, 2.872213e-002, -2.356693e-002, -2.479129e-002, -2.654434e-002, -3.195080e-002, -1.089804e-001, -8.027699e-003, 2.496464e-002, 1.726347e-002, 3.591197e-003, -5.420977e-002, 5.272671e-002, 5.279306e-002, 3.875210e-002, 5.536494e-004, -7.623091e-002, 6.829720e-002, 1.157641e-002, -1.239970e-002, 2.984823e-002, 3.211698e-002, 1.405017e-002, -4.986717e-003, -3.477966e-002, -1.578190e-002, -3.751338e-002, -3.611122e-002, -1.419213e-002, -2.490542e-002, 4.144343e-002, 6.327721e-002, -2.281936e-002, 3.329771e-002, -5.774173e-002, -1.043854e-002, 3.036224e-002, -2.068427e-002, 2.604577e-002, -1.035730e-002, 5.394288e-002, 5.218879e-002, 3.561786e-002, 3.604701e-002, 2.015275e-002, 3.666940e-002, 5.064999e-003, -1.755169e-002, -1.263100e-002, 7.485488e-003, -2.126942e-002, -5.897344e-002, -1.868099e-003, 6.330413e-002, -1.053306e-001, -1.187643e-002, -1.205095e-002, 5.032888e-003, 1.254163e-002, 4.495539e-003, 3.078347e-002, -5.560315e-002, 1.083287e-002, 2.437117e-002, 3.342590e-002, 2.531627e-002, 4.323274e-002, 2.186617e-002, -1.854492e-003, -5.138643e-003, 4.269103e-003, 4.433793e-003, 9.320119e-003, 1.259402e-002, -3.639403e-002, 5.576755e-002, -3.713582e-002, -7.266769e-003, -8.960246e-002, 1.760015e-002, 4.459739e-002, 9.567356e-003, -1.091300e-003, -4.018397e-002, -1.275148e-002, 1.163341e-002, 1.291284e-002, 2.442059e-002, 2.395543e-002, 2.191886e-002, -6.117264e-004, 1.741118e-003, -7.171382e-003, -3.604081e-003, -4.842956e-003, -1.843011e-002, -1.988267e-003, 1.076942e-002, 2.177241e-002, -5.546321e-002, -8.146557e-003, 2.665833e-002, 1.639715e-003, -4.446168e-002, 2.253817e-002, 9.195495e-003, 2.685162e-002, 1.236326e-002, -1.504822e-002, -5.338004e-003, 1.213720e-002, 7.265472e-003, -5.237721e-003, -2.239230e-002, -6.093602e-003, -1.216177e-002, -8.666528e-003, 3.999317e-004, -9.149112e-005, 2.970187e-003, -4.959467e-002, 3.106313e-002, 1.667031e-002, 1.168969e-002, 1.468975e-002, 2.211543e-002, -1.081100e-002, 8.780155e-003, 2.699301e-004, 2.699301e-004, 8.780155e-003, -1.081100e-002, 2.211543e-002, 1.468975e-002, -2.423437e-003, 4.203038e-002, -1.091806e-002, 9.310386e-003, -1.146908e-002, 9.741316e-003, 1.234281e-002, -5.863424e-002, -1.032934e-001, -2.769226e-002, -8.018607e-002, 1.025397e-001, 2.205302e-002, 7.328422e-002, -9.281223e-003, -6.481325e-002, -2.441497e-002, 3.075913e-002, -9.516120e-005, 4.160329e-002, 9.820218e-002, -3.199382e-002, 3.633337e-003, 3.834927e-002, 5.081274e-002, -1.548791e-002, -3.432207e-002, -4.102077e-002, 8.658419e-003, 1.585696e-003, 7.526812e-003, 4.146911e-003, 8.070403e-002, -9.596162e-002, 4.565583e-002, 2.306965e-002, -1.553913e-002, -1.788800e-003, -6.781601e-003, 1.996958e-003, 6.163701e-003, -2.324897e-003, 2.005357e-002, 3.761754e-003, -8.937108e-002, 9.467108e-003, 4.637821e-002, 4.050317e-003, 1.065982e-002, 1.967462e-002, -2.585993e-003, -2.255109e-004, -8.717556e-003, 2.991694e-003, -9.083664e-003, -3.746104e-002, 1.200270e-002, -2.106327e-003, 6.133069e-003, 1.518916e-002, 1.119168e-002, -1.496719e-003, 1.266705e-003, -6.773075e-003, 1.485621e-002, 1.041398e-002, -1.688210e-003, -4.564264e-003, 2.038526e-002, 9.772264e-003, -1.768701e-002, 1.388358e-002, 1.388358e-002, -1.768701e-002, 9.772264e-003, 2.038526e-002, -4.564264e-003, -3.941101e-003, -4.806540e-002, 1.151823e-001, -2.376822e-003, -3.820954e-002, -6.001196e-002, 3.270370e-002, -1.580883e-002, 7.571930e-002, -1.462390e-002, 4.784058e-002, 1.299194e-001, -1.276382e-001, 7.261497e-002, 5.434403e-003, -1.836918e-002, -1.321682e-002, -2.168960e-002, -1.039188e-002, 7.819809e-003, 5.064148e-002, -2.119905e-002, -2.426701e-002, -2.816466e-002, -1.981554e-002, 8.619926e-004, -9.647438e-003, 1.313070e-002, -1.526546e-002, -6.212310e-002, -3.747258e-002, -2.901611e-002, -5.107202e-002, 6.062127e-002, 3.755703e-002, 6.937841e-003, -8.623847e-004, -5.440007e-003, 7.080137e-003, -2.859551e-002, -4.009815e-002, -2.485470e-004, 2.598490e-002, 9.520003e-002, -3.558416e-002, -7.294305e-003, 1.790746e-002, 8.812880e-003, 7.724718e-003, 2.834071e-003, -8.412157e-003, -5.024206e-003, -


© ISO/IEC 2004 — All rights reserved

Copyright International Organization for Standardization
Provided by IHS under license with ISO
No reproduction or networking permitted without license from IHS
Not for Resale

8.370722e-003, 2.816794e-002, -3.309765e-002, -1.742011e-002, 2.088928e-002, -3.993725e-003, 4.993264e-003, 1.219612e-002, 3.448462e-003, -4.174803e-003, -1.319274e-003, 5.375138e-003, 1.540344e-002, -7.855677e-003, -7.065500e-003, -3.473835e-003, 9.222427e-003, 2.318468e-002, -5.971199e-003, 1.669857e-002, 1.669857e-002, -5.971199e-003, 2.318468e-002, 9.222427e-003, -3.473835e-003, 2.606825e-002, -6.019287e-002, 1.243365e-001, -1.965738e-002, 7.135741e-003, -1.195692e-002, -3.381080e-002, 3.793984e-002, -7.363138e-002, 4.893411e-002, -4.340378e-002, 4.855420e-002, 1.252161e-001, 6.357315e-002, -5.298817e-002, 6.056338e-003, 3.202761e-003, 3.867063e-002, 1.541532e-002, 9.375194e-003, 3.707858e-002, -1.781450e-003, -1.412851e-002, 4.687966e-002, 3.145435e-003, -3.167106e-002, -7.612643e-004, 2.608243e-003, 1.265252e-002, 1.123787e-002, 4.065134e-002, 1.859132e-001, 4.121573e-002, 1.055668e-002, -6.842891e-002, -9.166176e-003, -2.807053e-002, -5.833398e-003, 1.259855e-002, 1.336093e-003, 5.051292e-005, 6.261283e-003, 2.815530e-002, 7.771069e-002, -1.256322e-001, 1.544619e-002, -4.732953e-002, -1.302302e-002, -1.160314e-002, 8.608398e-004, -2.888948e-003, 3.003475e-003, 4.649305e-003, 2.102548e-002, 1.677443e-002, -3.328554e-002, -9.138976e-004, -7.710180e-003, -2.026786e-002, -3.299066e-003, -9.383993e-004, -9.747041e-004, 4.780038e-003, 6.289089e-003, 3.442254e-002, 1.250196e-002, -2.827999e-003, 9.126045e-003, -3.806548e-004, -2.759624e-003, 2.720287e-002, 3.357988e-002, 3.357988e-002, 2.720287e-002, -2.759624e-003, -3.806548e-004, 9.126045e-003, -2.405598e-003, 9.838447e-003, -3.091228e-002, -3.611530e-002, -2.835953e-003, -1.121819e-002, -1.503118e-002, 1.046989e-002, -1.783625e-002, 7.051695e-002, 2.779847e-002, -2.690673e-002, 1.667523e-002, 1.772780e-002, 1.049984e-001, 3.128892e-002, -1.061392e-002, -1.247135e-002, -1.915706e-002, -3.779851e-002, 4.179835e-003, 6.013394e-002, -4.684174e-002, 1.895446e-002, 4.410493e-002, 2.972788e-002, 1.678121e-002, 1.918039e-002, 6.705557e-003, -2.469091e-002, -1.919814e-002, -1.845344e-003, 4.596769e-002, 2.160944e-002, 3.069536e-002, 2.256038e-002, 8.065263e-003, 2.204724e-002, 1.165979e-002, -2.226784e-003, -1.847233e-002, -3.575080e-002, -3.557315e-002, -1.251644e-001, -1.328941e-001, -2.148000e-002, 2.368769e-002, 1.406401e-002, 1.865094e-002, 1.322048e-002, -8.318746e-003, -1.756635e-002, -2.994040e-002, -1.778479e-002, 5.138246e-003, -6.567723e-002, 4.547502e-004, 1.102234e-002, 3.065081e-003, 1.150133e-002, 1.676846e-002, -2.221597e-003, -1.807911e-002, -2.791910e-002, -7.748910e-003, -2.901043e-002, -4.615072e-003, -2.957762e-002, -4.743329e-002, -4.743329e-002, -2.957762e-002, 6.020278e-002, 1.036939e-001, 1.075176e-002, -9.452268e-003, 2.779981e-002, 6.926659e-003, 3.789809e-002, -3.471940e-004, -4.023368e-003, 1.358119e-002, -4.340757e-003, -7.086892e-003, 4.390005e-003, 4.390005e-003, -7.086892e-003, -1.065807e-001, -9.566376e-003, -8.163086e-003, -3.529458e-003, -3.779825e-003, -5.556660e-002, -1.113351e-002, 1.379426e-003, 1.500202e-003, 4.539388e-003, -3.843039e-002, 2.795215e-002, 1.432756e-002, 1.432756e-002, 2.795215e-002, -6.205167e-002, -4.692391e-003, -6.170526e-003, 8.590193e-003, 1.192224e-002, 1.048467e-002, -1.001412e-002, -4.904249e-003, -1.838640e-003, -3.748439e-003, 1.232828e-002, 2.478876e-002, -2.075130e-002, -2.075130e-002, 2.478876e-002, -4.738174e-002, 2.324410e-002, -5.729385e-003, 1.035215e-002, 6.178575e-002, -2.683322e-002, 2.251528e-002, -5.935905e-003, -2.268992e-002, 2.312042e-002, -5.165142e-002, -3.224755e-002, -3.560065e-002, -3.560065e-002, -3.224755e-002, 1.246467e-001, 5.379778e-002, -1.101222e-002, 7.435331e-003, 5.753954e-002, 3.074582e-002, -6.825875e-004, -1.077314e-002, -1.001224e-003, 1.418791e-002, 7.229694e-002, 1.363757e-002, -9.938514e-003, -9.938514e-003, 1.363757e-002, -2.587837e-002, 1.471517e-002, -2.300927e-003, 2.085234e-003, 3.917241e-002, -1.567182e-002, 6.397423e-004, -1.142107e-002, 3.861444e-003, -2.260640e-003, -2.245963e-004, 6.929857e-003, 1.871306e-002, 1.871306e-002, 6.929857e-003, -2.279550e-002, 2.730171e-002, 5.355519e-004, 5.670084e-003, -1.921786e-002, 2.538218e-003, -6.141494e-003, 5.141937e-003, -6.394090e-004, 1.608619e-003, 2.463849e-002, -4.847159e-002, -8.460010e-002, -8.460010e-002, -4.847159e-002, 1.394968e-001, 3.874585e-003, 3.249569e-003, -1.978510e-002, 1.120390e-002, 4.371740e-002, 1.747747e-002, 7.131618e-003, -1.301565e-002, -5.719633e-003, 2.539393e-002, 2.828435e-002, -5.666473e-002, -5.666473e-002, 2.828435e-002, -9.839649e-003, 9.400529e-004, -6.776271e-003, 2.461468e-002, 3.454427e-003, -2.282594e-002, -8.513921e-003, -4.372288e-003, 6.798400e-003, 5.164486e-003, -3.019083e-002, 1.284378e-002, 2.332489e-003, 2.332489e-003, 1.284378e-002, 1.686803e-002, 1.248822e-002, -1.070859e-003, 3.266168e-003, 8.487650e-004, 3.038991e-003, -2.600990e-002, 3.462433e-003, -1.496685e-003, 2.011286e-002, 5.654303e-002, -3.428422e-003, 2.780832e-002, 2.780832e-002, -3.428422e-003, -9.690608e-003, 1.002803e-002, -8.007387e-003, -1.165493e-002, -1.322095e-003, 6.500463e-003, 1.254271e-002, -2.657617e-003, -5.074681e-003, -2.538192e-002, -5.422316e-003, 4.358074e-002, -3.046978e-002, -3.046978e-002, 4.358074e-002, -6.549075e-002, -2.078456e-002, 1.701630e-002, -1.346899e-002, -4.381842e-002, -2.658428e-002, -1.597866e-002, -4.170169e-003, -1.151491e-002, -1.904349e-002, 1.844588e-002, 1.126001e-002, 3.269364e-004, 3.269364e-004, 1.126001e-002, -8.243058e-002, -1.116173e-002, 8.690918e-003, -1.110933e-002, -2.788106e-002, -3.401049e-002, -1.635619e-002, 2.252989e-003, 3.913832e-004, 1.874877e-002, -2.071448e-002, 3.283592e-002, 1.789069e-002, 1.789069e-002, 3.283592e-002, 2.078755e-002, -7.478295e-003, -4.258106e-003, 1.351019e-002, 2.068953e-002, 1.858860e-002, 4.106752e-003, 3.220258e-004, 4.048886e-003, 2.659753e-002, -5.425239e-002, 5.991840e-002, 2.923235e-002, 2.923235e-002, 5.991840e-002, 4.706837e-004,

© ISO/IEC 2004 — All rights reserved


Copyright International Organization for Standardization
Provided by IHS under license with ISO
No reproduction or networking permitted without license from IHS
Not for Resale

4.896911e-003, 1.524260e-002, -2.742641e-004, -5.733341e-003, -4.497107e-003, 2.546804e-002, 1.032970e-002, -3.501181e-003, -1.346738e-003, 3.036790e-004, -1.174868e-002, -8.192773e-003, -8.192773e-003, -1.174868e-002, 5.038298e-002, 2.525812e-002, 3.211085e-002, 1.382803e-002, 6.226877e-002, -3.616035e-002, 3.069734e-003, 9.935713e-003, -4.950673e-003, -2.397874e-002},
{-1.130200e-004, -3.351579e-003, 9.981596e-004, 5.427752e-003, -1.171875e-002, -1.786954e-002, 8.239627e-003, -1.251114e-002, -7.608933e-003, 8.143429e-003, 1.273192e-002, -1.226727e-002, 1.273192e-002, 8.143429e-003, -7.608933e-003, -1.251114e-002, 8.239627e-003, -1.786954e-002, -1.171875e-002, 5.427752e-003, 9.981596e-004, -3.351579e-003, -1.351308e-003, -1.857556e-002, 2.773134e-002, -2.081217e-002, -5.639747e-003, 3.692533e-002, -3.073625e-003, 1.467460e-003, -3.236632e-002, -1.475934e-002, -4.989882e-002, -2.751820e-002, 3.030157e-002, 8.051161e-003, -7.367254e-002, 4.549521e-002, -3.661764e-003, -9.825936e-003, -8.943264e-003, -3.958275e-002, 3.184460e-002, -1.364217e-002, 2.392374e-002, -1.121648e-002, -9.118586e-003, 3.492375e-002, -1.006283e-002, 3.788169e-002, 9.745821e-003, 2.805949e-002, -2.659562e-003, 5.883055e-002, 2.529574e-002, -4.346977e-002, 3.809986e-002, 3.914441e-002, -2.682262e-003, 5.218560e-002, 3.193147e-002, 2.209672e-002, 1.956804e-002, -1.424382e-003, -7.335729e-003, -1.574287e-002, 5.916651e-003, 2.009753e-002, -2.171965e-002, 9.535215e-003, -1.551171e-002, -6.392520e-003, 7.899968e-003, 1.547619e-002, 4.849068e-002, 9.341905e-003, -1.284100e-002, -1.260177e-002, 1.614997e-002, -2.102743e-002, 3.184497e-002, -1.418801e-002, -1.879865e-002, -7.059549e-003, 1.076119e-003, 2.515305e-002, 1.797617e-002, -8.206727e-003, -2.860719e-002, 3.341608e-002, 5.702032e-002, 1.244984e-002, -3.739928e-002, 7.417623e-003, 2.057481e-002, -2.173524e-002, 3.144049e-003, -1.235486e-002, -9.527726e-002, -1.021433e-002, -2.591568e-002, -1.758915e-002, 2.985139e-002, -8.937752e-003, 4.766373e-002, -1.301057e-002, 3.289331e-002, 3.258069e-002, 5.199654e-003, -6.690451e-003, -4.793930e-003, -2.046382e-002, -2.781449e-002, -2.911668e-002, -1.892725e-002, 6.843836e-002, 2.025540e-002, 2.135381e-002, 7.118577e-002, 7.874120e-003, -3.531231e-003, 5.635779e-002, 3.756795e-002, 1.940031e-002, -3.455704e-002, 5.215970e-003, 3.830888e-002, -9.323390e-003, -2.402310e-003, -2.026091e-002, -2.729168e-002, 5.230437e-002, -2.639294e-002, 1.580953e-002, 7.869326e-002, -3.714543e-002, -1.012184e-002, 5.675972e-002, 2.354584e-002, -1.818284e-002, 4.572380e-003, 4.463425e-002, 6.918372e-002, 4.809723e-003, -2.428741e-002, -4.613229e-002, -1.526103e-002, 2.352155e-002, 4.549262e-003, 5.237828e-004, 3.801413e-003, 1.334227e-002, -2.571225e-004, 2.140618e-002, -1.131300e-001, 4.095926e-002, -3.235412e-002, 4.209886e-002, -7.817579e-003, 4.470072e-002, -1.578285e-002, 4.023536e-002, 1.995260e-002, 7.241174e-002, 3.743874e-002, -2.933937e-002, -1.522903e-002, 2.909488e-002, 6.082857e-003, -2.251847e-002, -4.455034e-002, -6.996525e-002, -7.576538e-003, 6.235750e-003, 8.076271e-003, -8.500749e-004, -3.964508e-002, 2.807752e-002, -7.022957e-002, 1.251428e-002, 3.878972e-002, -3.629291e-002, -6.293646e-002, -1.453525e-002, -1.965478e-002, -1.894156e-002, 8.517582e-004, 1.286887e-002, 2.221467e-002, -1.730218e-002, -1.529169e-002, 5.153780e-002, 5.390936e-003, -6.028334e-002, 2.314142e-002, -3.036152e-002, -4.437819e-002, -1.841607e-002, 1.108665e-002, 7.509949e-003, 2.388715e-002, -3.116784e-002, -1.665687e-002, 2.930350e-002, -2.299574e-002, -3.203422e-002, -5.806976e-002, -7.111888e-003, -1.729894e-002, 5.746496e-003, 2.309723e-002, 3.774532e-002, -4.148376e-002, -1.830080e-002, -4.980090e-002, -6.484342e-003, 4.950583e-002, 9.510670e-003, -1.539589e-002, 4.297034e-002, 2.767346e-002, -1.253187e-002, 2.888840e-002, -5.270347e-002, 1.169094e-002, -3.046388e-002, -7.143238e-002, -5.417624e-002, -3.137926e-002, -3.399292e-002, -5.088878e-002, 5.787539e-003, 3.078654e-004, 9.199936e-003, 3.777325e-003, -2.196746e-002, -2.142831e-002, -9.054722e-002, -5.196844e-002, 1.645330e-002, 3.799086e-002, 4.837223e-002, 2.007446e-002, -1.157636e-002, 4.110641e-002, -3.969936e-002, 1.279423e-001, -1.550979e-002, -2.668614e-002, -3.845645e-002, -3.819085e-002, -4.245511e-002, -1.788078e-002, -7.451970e-003, 1.770386e-002, 6.090659e-003, -1.307191e-002, -3.042551e-002, -5.496345e-002, -5.092742e-002, 3.819270e-002, -7.025675e-002, 7.805440e-003, 8.266372e-002, 6.910644e-002, 7.971540e-003, 7.357942e-002, -3.853527e-002, 5.238396e-002, 4.991329e-003, -5.403352e-002, -3.123193e-002, -2.403864e-002, -1.573232e-002, -1.393894e-002, 8.027892e-003, -2.013723e-003, -1.369729e-003, -4.945229e-003, -2.391053e-002, -2.188162e-002, -1.943259e-002, -1.628776e-002, -6.421267e-002, -6.636751e-002, -6.421124e-002, -2.390602e-002, -9.252301e-002, 3.965694e-002, 4.960946e-003, 2.200982e-002, -3.211484e-002, -1.712436e-002, -1.284632e-002, -1.074960e-002, -2.923786e-002, -7.039500e-003, -5.412456e-003, -2.493749e-003, -1.200813e-002, -1.187385e-002, -3.239966e-002, -1.740879e-002, -3.154081e-002, -1.532415e-002, -6.190475e-002, 8.201750e-002, 1.048335e-002, 1.084344e-002, -6.330209e-003, 6.651149e-002, 3.325639e-003, 1.891044e-002, 2.211616e-002, 2.211616e-002, 1.891044e-002, 3.325639e-003, 6.651149e-002, -6.330209e-003, -2.721221e-002, 2.853310e-002, 2.505313e-002, -1.438963e-002, -1.571692e-002, 2.847136e-002, 2.769821e-002, 4.521460e-002, 4.603608e-002, 3.087993e-002, -2.597706e-002, 3.141469e-002, -2.692887e-002, 8.110241e-002, -5.597948e-002, -2.616295e-002, -2.872797e-002, 2.627480e-002, 3.060846e-002, -3.617114e-003, -1.208354e-001, 3.318110e-002, -2.806192e-002, -6.333419e-002, -8.218019e-003, -1.698267e-003, 9.298630e-003, 2.272902e-002, 7.315108e-003, 2.489355e-003, 1.956914e-002, 4.901542e-002, -5.173405e-002, 7.818438e-002, 3.395442e-002, -2.071005e-002, -2.159114e-002, -1.909930e-002, -7.384796e-003, 4.115312e-003, -9.633152e-003,


© ISO/IEC 2004 — All rights reserved

Copyright International Organization for Standardization
Provided by IHS under license with ISO
No reproduction or networking permitted without license from IHS
Not for Resale

1.101735e-002, 2.163333e-002, 3.491885e-002, 4.598154e-002, 2.033128e-002, -2.538884e-002, -3.094882e-002, -2.499932e-002, -1.585982e-002, -3.877733e-003, 6.256864e-003, -5.097996e-003, -4.032536e-003, 3.559729e-002, -3.514075e-002, -3.503840e-002, -6.488593e-003, -2.964970e-002, -1.788168e-002, -9.089989e-003, -3.418105e-003, -2.081192e-003, -1.303949e-002, -7.092080e-003, -2.310414e-002, -1.383160e-002, -1.579765e-002, 8.076224e-003, 2.916337e-002, -9.869986e-003, -7.240779e-003, -7.240779e-003, -9.869986e-003, 2.916337e-002, 8.076224e-003, -1.579765e-002, 2.040913e-002, -3.568139e-002, -8.173764e-002, 9.067071e-002, 1.932370e-002, 4.472514e-002, 3.655067e-002, 1.152140e-001, 3.606442e-002, -3.828685e-002, 5.525728e-003, 6.749384e-002, -6.163122e-002, -7.499748e-002, 5.122347e-002, 3.257874e-002, 2.789124e-002, -8.253858e-003, -4.934141e-002, -5.405967e-002, 4.204064e-002, -1.010147e-001, -1.990259e-003, 4.061043e-002, 7.293694e-002, 8.934701e-003, 1.749068e-002, 1.658420e-002, 1.604637e-002, 1.650756e-003, 1.377120e-002, 3.728760e-002, 9.103683e-002, -6.056045e-003, 1.977363e-002, 1.294164e-002, 3.536205e-004, 3.988017e-003, 3.816815e-003, 8.826877e-003, -4.090180e-003, -1.348135e-003, 3.292268e-003, 3.888226e-002, -4.094480e-002, 1.787760e-002, -1.798479e-003, -1.750560e-002, -4.200300e-003, -4.269335e-003, -6.232189e-003, -9.949138e-003, -2.137488e-002, -3.762054e-002, 2.095112e-002, -7.176669e-002, -1.920657e-002, 1.015175e-002, -9.758269e-003, -3.721110e-003, -2.779053e-003, 7.816650e-003, -1.097820e-002, -1.648974e-002, -2.391526e-002, -5.217063e-002, -4.529663e-003, -1.391467e-002, 1.139850e-003, 3.366241e-002, 1.886557e-002, -2.970631e-002, -2.970631e-002, 1.886557e-002, 3.366241e-002, 1.139850e-003, -1.391467e-002, 1.400695e-002, -5.418881e-002, -5.839659e-002, -4.884601e-002, 1.452511e-002, 2.856288e-002, 4.408779e-002, 7.698150e-002, 7.494713e-002, -7.643251e-002, 4.710076e-002, -2.602583e-002, -1.440472e-002, 2.778456e-002, 2.199104e-002, 2.566068e-002, 1.515092e-002, 9.028116e-003, -8.307244e-003, -2.136444e-002, 5.614923e-002, -4.947907e-002, -3.951177e-002, 8.007319e-002, -1.695581e-002, 2.667668e-002, 1.351354e-002, 1.231669e-002, -7.088470e-003, -2.044828e-002, -8.285072e-003, -4.152847e-002, -3.156935e-002, 2.263926e-003, 6.870103e-002, 9.925090e-003, -3.095954e-002, -3.949634e-003, 1.532634e-002, -6.757427e-003, -1.587359e-002, -1.335822e-002, 1.364468e-002, -8.997523e-002, 1.309543e-002, -3.077142e-002, -3.637431e-003, -1.280697e-002, -1.445589e-002, -1.190574e-002, 3.379088e-003, -8.686572e-003, -2.901600e-002, -2.015659e-002, -2.497415e-003, 7.976586e-002, 2.787221e-002, 2.827824e-002, 3.156933e-003, -1.496811e-002, -1.082394e-002, -5.201581e-004, -7.119057e-003, -5.869209e-003, -1.387226e-002, -2.433668e-003, 7.404796e-003, -9.896922e-003, 2.120881e-002, 8.335880e-003, 1.741428e-002, 2.883298e-002, 2.883298e-002, 1.741428e-002, 8.335880e-003, 2.120881e-002, -9.896922e-003, 8.407761e-002, -6.865232e-002, -9.355527e-002, 1.828655e-002, 2.526357e-002, 9.006462e-004, -1.716473e-002, -1.870372e-002, -6.726122e-002, -1.080035e-001, 4.076588e-002, 6.871369e-002, 3.141761e-002, -5.594704e-002, 2.496615e-002, 4.566211e-002, 8.489728e-003, 2.013874e-002, 4.952732e-002, 5.643941e-002, 4.076810e-002, -2.542455e-003, -3.344172e-002, -2.458803e-003, 1.022423e-001, 2.589715e-002, -7.440908e-003, 1.474621e-002, 9.961645e-003, 2.716600e-002, 3.978034e-002, -8.958062e-003, 1.049261e-001, -2.470053e-002, -4.632259e-002, 1.837737e-002, 9.312237e-003, 8.473808e-003, -5.717779e-004, 2.250454e-003, -1.478359e-003, -4.222211e-003, 4.433340e-003, 7.287250e-002, -3.225760e-003, 3.930534e-002, -2.104051e-004, -4.129441e-003, -7.414348e-003, -3.567219e-004, 3.692523e-003, 2.564656e-003, 4.588323e-004, 3.247711e-004, -2.442080e-002, 6.151748e-002, 2.572498e-002, 2.706615e-002, 1.063975e-002, -5.672868e-003, -1.539090e-003, 5.914646e-004, -2.098218e-003, -2.317791e-003, -1.258567e-003, 3.683555e-002, -5.641593e-002, -9.399437e-002, -6.471540e-003, -6.471540e-003, -9.399437e-002, 1.173652e-001, 2.080034e-002, -4.695575e-003, 5.566249e-003, 3.801774e-003, 6.009998e-002, -2.372097e-003, 6.982196e-003, 4.513184e-003, 1.625473e-003, 1.634932e-003, -2.181616e-002, -4.345058e-003, -4.345058e-003, -2.181616e-002, -5.503161e-002, 1.243845e-002, 2.061523e-002, 1.144368e-002, 7.907657e-003, 1.062831e-002, 7.614288e-003, -2.492699e-003, 6.405647e-004, 8.873559e-003, 2.783749e-002, 1.957067e-002, 2.023956e-002, 2.023956e-002, 1.957067e-002, 4.337170e-002, 1.233772e-002, 1.445087e-002, 1.605026e-002, 2.825099e-002, -8.780524e-004, 1.133667e-002, 6.583531e-003, 9.882101e-003, 1.711015e-002, 2.485352e-002, -1.000694e-001, 4.420303e-002, 4.420303e-002, -1.000694e-001, 9.138420e-002, -1.449359e-002, 1.241875e-002, 3.373297e-003, -1.006866e-002, 4.549523e-002, -1.108437e-002, 3.327297e-003, 9.258978e-003, 1.251024e-003, 5.367427e-002, -1.671422e-002, -8.887335e-003, -8.887335e-003, -1.671422e-002, -7.854298e-002, -4.142112e-002, -3.084714e-002, 3.350160e-003, -3.411096e-002, -2.293684e-002, -1.816147e-002, -1.917447e-002, 2.572693e-004, -7.076785e-003, 1.195017e-002, 2.755162e-002, 7.982239e-003, 7.982239e-003, 2.755162e-002, -2.613249e-002, 2.425737e-002, -3.248187e-003, 1.493849e-002, -2.507306e-002, -6.206430e-003, 1.574438e-002, -1.081850e-003, -1.610721e-003, 1.999605e-002, -6.555416e-002, 8.144793e-002, 2.997054e-002, 2.997054e-002, 8.144793e-002, 5.959897e-003, -1.564514e-002, 5.883107e-003, 6.014702e-003, -9.701088e-003, -2.159521e-002, -4.781061e-003, 1.307502e-003, -3.162752e-003, 1.128124e-002, -9.684474e-004, 4.798168e-002, 1.407956e-002, 1.407956e-002, 4.798168e-002, -4.956113e-002, 1.801307e-002, -5.143735e-003, -2.050303e-002, -2.103880e-002, -2.777868e-002, -1.056852e-002, 1.672724e-003, -1.572884e-002, -1.629545e-002, -3.774149e-002, 5.072950e-002, 1.562508e-002, 1.562508e-002, 5.072950e-002, -1.055340e-001, -5.859128e-002, -4.449300e-003, -

© ISO/IEC 2004 — All rights reserved


Copyright International Organization for Standardization
Provided by IHS under license with ISO
No reproduction or networking permitted without license from IHS
Not for Resale

9.752595e-003, -6.250011e-002, -1.866034e-002, -9.675782e-003, -6.902793e-003, -9.223561e-003, -1.121822e-002, -8.289930e-003, -3.653183e-002, -1.184661e-002, -1.184661e-002, -3.653183e-002, 8.712849e-002, 1.416627e-003, 5.834161e-003, 3.551357e-003, 6.555781e-003, 1.938630e-002, 3.828799e-003, 3.143464e-003, 2.268474e-004, 8.973564e-004, -9.022378e-002, -1.589767e-002, -1.237471e-002, -1.237471e-002, -1.589767e-002, 8.813309e-002, 1.816968e-002, 1.325223e-002, 1.552220e-002, 2.600607e-002, 3.405427e-002, 1.354224e-002, 4.349382e-003, 4.200966e-004, 1.739508e-002, 4.875108e-003, 3.197507e-002, -8.776470e-003, -8.776470e-003, 3.197507e-002, -3.547788e-002, -3.188973e-002, 1.733415e-002, -2.255096e-003, -2.327410e-002, -8.198274e-004, 6.936559e-003, 5.278511e-003, 4.281568e-003, 7.416280e-003, 3.834079e-002, -3.956063e-002, 3.069127e-002, 3.069127e-002, -3.956063e-002, 3.580239e-002, 3.678203e-002, 2.152493e-002, 1.698778e-002, 4.343597e-002, 3.112345e-002, 1.132621e-002, 1.330838e-003, 5.461234e-003, -2.479753e-003, 3.160965e-003, -2.111926e-002, 1.115081e-002, 1.115081e-002, -2.111926e-002, -1.005579e-002, -8.476712e-003, 1.874989e-004, -1.275610e-002, -1.949135e-002, -2.448603e-002, -4.197212e-003, -2.404026e-003, -5.175641e-003, -1.802380e-002, 7.531586e-002, -2.392800e-002, -1.782186e-002, -1.782186e-002, -2.392800e-002, 5.531243e-002, 1.548817e-002, 4.838703e-003, 1.029082e-002, 4.957573e-003, -7.952166e-003, 3.213499e-003, 1.812123e-003, 4.779439e-003, 1.773782e-003, 1.743760e-002, -2.552300e-002, 2.808414e-002, 2.808414e-002, -2.552300e-002, -1.896383e-001, -3.757244e-002, -1.015757e-002, 2.776191e-003, -4.810304e-002, -3.485377e-002, -1.437204e-002, 3.250040e-003, -1.224589e-003, -3.519652e-002},

{6.930405e-004, 1.113517e-003, 1.554453e-003, -9.789491e-003, 4.067475e-003, 8.919699e-003, 1.541606e-002, -2.968307e-003, -8.097860e-003, 1.580603e-003, 9.055649e-003, 1.689872e-002, 9.055649e-003, 1.580603e-003, -8.097860e-003, -2.968307e-003, 1.541606e-002, 8.919699e-003, 4.067475e-003, -9.789491e-003, 1.554453e-003, 1.113517e-003, 1.798896e-003, -1.443840e-002, -9.894312e-003, -6.929873e-003, -3.330748e-002, -3.850848e-002, 1.099729e-002, -2.766365e-002, 1.841556e-002, 1.565566e-002, 6.894079e-003, -3.615108e-002, -4.932233e-002, 2.364626e-003, 1.090002e-002, -5.947429e-002, 1.383873e-002, -1.526922e-002, -2.255055e-002, 2.065484e-002, -1.580810e-002, -1.283454e-002, 9.134158e-003, 2.314187e-002, -8.154867e-003, -2.993611e-003, 1.684814e-002, 4.664271e-002, 1.893296e-002, -2.908413e-002, 7.471525e-002, 1.337687e-002, 6.374504e-002, -7.825510e-003, -1.131233e-002, -2.467126e-002, 6.968200e-002, 7.884019e-003, 4.968280e-002, 2.196908e-002, -1.707210e-002, 3.902474e-003, -6.140825e-003, 6.780731e-003, -2.351959e-002, -4.451831e-003, 1.825319e-002, -7.951314e-003, -1.197923e-003, 9.737919e-003, 4.066044e-002, 2.643904e-002, 2.043868e-002, -1.549384e-002, -6.228005e-002, -8.663920e-003, -5.642520e-002, -3.982504e-002, -2.976276e-002, -5.805931e-002, 2.240520e-003, 1.715850e-002, 2.579494e-002, -3.223411e-002, 4.607125e-002, -2.979389e-002, 4.936502e-002, -6.533868e-002, -2.063902e-002, -1.416771e-002, -6.359219e-002, 5.625809e-003, 1.987622e-002, -3.980278e-002, 1.514486e-002, 2.971814e-002, 1.794121e-002, -1.639338e-003, -2.252909e-002, -1.721487e-002, 9.613105e-003, -7.655912e-002, -4.397748e-002, 8.023018e-003, -2.018916e-002, -3.302146e-003, 1.965517e-002, 4.205539e-003, -2.957398e-002, -3.037583e-003, 4.420358e-002, 5.267032e-002, -1.977648e-002, -4.482557e-002, 2.390349e-002, 2.177750e-002, -1.730405e-002, -1.635539e-002, 3.968175e-002, 2.899164e-002, -2.846514e-002, -3.063986e-002, -2.625573e-002, 1.910310e-003, -2.980702e-002, 7.502767e-002, -2.748595e-002, -3.672934e-002, -6.298125e-002, -1.015905e-002, -6.741035e-002, -6.293569e-005, -1.081784e-002, -2.903923e-002, -5.855848e-002, -6.009820e-002, 2.402616e-002, -8.031205e-002, -4.016836e-002, -5.247035e-002, -3.822694e-002, -2.627734e-002, -1.888157e-002, -4.509734e-002, -5.203937e-002, -7.484021e-002, -5.179560e-002, 4.332608e-002, -2.261310e-002, -2.664210e-002, 2.614051e-002, -5.097149e-002, 3.622786e-002, -2.406849e-002, -8.466245e-003, 8.139743e-002, 1.256430e-002, 3.151364e-002, 5.526928e-002, -9.429476e-003, -2.511367e-002, -1.094128e-002, -7.230129e-004, -2.499939e-002, -6.149585e-002, -3.343959e-002, -1.437715e-003, -5.667235e-002, -4.377072e-003, -5.384183e-002, -5.865086e-002, 1.464660e-002, -1.600033e-002, 2.851925e-002, 6.136017e-002, -6.520843e-002, -1.503429e-002, -8.125109e-003, -4.040206e-003, -6.698848e-002, -4.221107e-002, -5.871471e-003, -1.264743e-002, -2.631872e-003, -2.545262e-003, -3.450586e-002, -3.521970e-003, 5.096280e-003, -1.578101e-002, -4.462559e-002, 1.007181e-002, -5.909031e-002, 1.273484e-002, 8.972276e-003, -1.025749e-003, -6.073149e-002, -1.110097e-001, 1.504067e-002, -1.219774e-002, -3.054978e-002, -7.921399e-002, 5.211109e-002, -2.076742e-002, -3.204272e-002, 3.618212e-002, -1.403188e-002, 9.245989e-003, -1.840998e-002, -2.097300e-002, 1.070214e-002, 4.100103e-002, 1.742923e-002, -2.703967e-002, -5.325384e-002, 5.312362e-002, -1.151020e-002, 1.165336e-002, 7.365167e-002, -3.030216e-002, -1.979736e-002, -9.600761e-003, -2.461583e-002, -9.837349e-002, -5.271766e-002, 2.376930e-002, 2.282815e-002, 3.645261e-002, 1.275252e-002, 8.652757e-004, 1.015336e-003, 3.352727e-003, -1.806612e-003, 1.175431e-002, 2.780971e-002, 3.041341e-002, 2.651831e-002, -2.576274e-002, 5.327400e-002, -3.148813e-003, 1.412955e-002, 9.057090e-003, 4.779376e-002, 1.215821e-002, 4.232735e-002, -8.035857e-002, 1.682707e-002, 1.933072e-002, 1.687249e-002, 2.341212e-002, 1.459794e-002, 1.082049e-003, 4.971237e-003, -1.812710e-002, 1.422140e-002, -5.654262e-003, -7.341784e-003, 1.549603e-002, -1.190538e-002, -4.828692e-002, 3.068523e-002, 4.489508e-003, -5.856285e-002, -2.876267e-002, 4.874593e-002, 3.987666e-002, 8.069204e-002, -4.399404e-003, 4.313672e-003, -1.085868e-002, 4.138073e-003,


© ISO/IEC 2004 — All rights reserved

--`,,```,,,,````-`-`,,`,,`,`,,`---
Copyright International Organization for Standardization
Provided by IHS under license with ISO
No reproduction or networking permitted without license from IHS
Not for Resale

2.335575e-002, 7.862095e-003, 1.336683e-002, 3.417410e-004, -1.847517e-003, -1.742647e-002, -7.134642e-003, -1.703913e-002, 3.503758e-003, 6.476356e-003, -1.235037e-002, 4.012539e-002, -4.991369e-002, 1.727677e-002, -4.727702e-002, 1.038961e-001, -2.832535e-002, 3.806033e-003, -4.923135e-002, 3.798124e-003, 1.727598e-002, 1.819660e-002, 8.314570e-003, 1.069396e-002, -3.863277e-003, 8.588845e-004, -5.703602e-003, -6.682240e-003, -2.554209e-003, -1.018354e-002, -4.941556e-003, -2.536752e-002, -2.777296e-003, 2.469041e-002, -7.520545e-005, 9.389454e-002, 1.510001e-002, -2.320674e-002, -1.851632e-002, 1.544782e-002, -5.158234e-003, 7.696994e-003, 7.696994e-003, -5.158234e-003, 1.544782e-002, -1.851632e-002, -2.320674e-002, -4.095276e-002, -6.608439e-003, 2.588286e-002, -1.125034e-001, -8.191312e-002, -2.289864e-002, -6.946382e-003, 1.595195e-002, 6.722361e-002, -6.245088e-002, 3.892304e-002, -1.185240e-002, -3.835362e-002, 8.006497e-002, 9.225784e-002, 2.538131e-002, 6.487314e-003, -8.053631e-003, -7.028154e-003, 2.038693e-002, -1.322810e-002, -1.995212e-002, 9.569677e-002, -1.046951e-001, 1.484113e-003, 3.639579e-002, -2.791319e-003, -1.755936e-002, -1.086693e-002, -9.903664e-003, -2.531773e-002, 2.933412e-003, -3.447861e-002, 1.019525e-002, 1.536405e-002, -2.956257e-002, -7.629172e-003, 1.480716e-002, 1.606835e-002, -9.140120e-003, -1.470124e-002, -2.547237e-003, 2.114317e-002, -6.643032e-002, 8.102943e-002, 4.534752e-002, -4.327785e-002, -1.036297e-002, 2.344744e-002, 1.101881e-002, -4.691116e-003, -6.765763e-003, 2.290940e-003, -1.060310e-002, 2.950779e-002, 8.072928e-002, 4.369000e-002, 7.754477e-003, -1.033480e-003, 1.273733e-002, 1.367909e-002, -1.270278e-004, -3.751890e-003, -6.808229e-003, -1.003196e-003, 3.748051e-002, -6.391661e-003, -2.081235e-003, 2.301493e-002, 1.087188e-002, -3.267204e-002, 1.230429e-002, 1.230429e-002, -3.267204e-002, 1.087188e-002, 2.301493e-002, -2.081235e-003, 1.410902e-002, -7.017607e-002, 7.640056e-003, -1.884610e-002, -2.869533e-002, -2.989963e-003, -3.686674e-002, -5.381545e-002, 1.229547e-002, -3.570351e-002, -6.723787e-003, -2.324454e-003, -1.578615e-001, 1.744369e-002, 1.315431e-002, 2.779376e-002, 1.914964e-002, -8.267595e-003, 1.464350e-002, 3.414313e-002, 1.442497e-001, 3.118836e-002, 2.621544e-002, 9.910460e-002, -6.745753e-003, -1.111124e-002, 4.996248e-003, 5.356802e-003, -1.399249e-002, -6.881751e-003, -3.206864e-002, 4.741863e-003, 7.422203e-002, -5.999089e-002, -3.983814e-002, 1.100255e-002, -3.511707e-003, -1.721475e-002, -4.725395e-003, -3.206244e-003, 6.903218e-003, -1.266871e-002, -1.500620e-002, 6.640455e-002, 8.241795e-002, 3.591072e-002, -4.729406e-003, 1.769811e-002, 2.329495e-003, 9.780160e-004, 5.335267e-003, 6.187586e-003, 2.694559e-002, -1.236513e-002, 8.613559e-002, 8.988061e-002, 7.426182e-002, -1.525357e-002, 6.531504e-003, 3.649488e-003, 1.452886e-003, -2.667135e-004, 1.818300e-003, 1.011715e-002, 2.165552e-003, 8.113669e-002, -1.745581e-002, 3.564738e-003, 3.123564e-002, -3.436644e-002, -4.222778e-003, 5.056869e-002, 5.056869e-002, -4.222778e-003, -3.436644e-002, 3.123564e-002, 3.564738e-003, -6.591768e-002, 8.194345e-003, 1.237002e-002, 8.670908e-002, 4.464732e-002, 3.834534e-002, 1.500723e-002, 9.319504e-002, -8.558077e-002, 6.291273e-004, 2.673343e-002, -1.314195e-002, 2.813841e-002, 1.470438e-001, -1.045466e-002, -1.448208e-002, 3.331915e-002, 6.466344e-003, -4.567065e-002, -2.482972e-002, 9.393680e-002, 3.665495e-002, 1.193678e-001, 1.523502e-001, 4.124461e-002, 3.009392e-002, -1.860087e-002, 6.572107e-003, -9.629764e-003, -3.220686e-002, -5.159262e-002, 5.999486e-002, -9.500687e-003, -2.443221e-002, -4.201876e-002, 5.482386e-002, -2.502270e-003, 2.497428e-003, -1.014442e-002, -1.697899e-002, -5.490503e-003, -1.775017e-002, 4.969705e-003, -6.815149e-004, 1.220040e-003, -4.229365e-002, -1.450822e-002, 2.256992e-002, 4.530068e-003, -4.832260e-003, -8.979987e-003, -3.379947e-003, -5.667741e-003, -3.853952e-003, -1.654271e-002, -1.756743e-003, 1.703100e-002, 5.717342e-003, -1.282333e-003, 8.050510e-003, -2.860626e-004, -6.285826e-003, -8.138765e-003, 7.355689e-005, 2.823343e-003, -8.830784e-003, 9.440508e-003, 7.276099e-004, -2.577588e-002, 1.249075e-002, -2.685982e-002, -8.087873e-003, -8.087873e-003, -2.685982e-002, 1.249075e-002, -2.577588e-002, 7.276099e-004, -1.362861e-002, -4.597545e-002, -3.028308e-002, -6.015364e-002, 6.222043e-002, 1.876811e-002, 5.882757e-003, 4.563852e-002, 6.155679e-002, 2.576205e-003, 6.564884e-002, -9.747650e-003, -2.214886e-002, -3.392000e-002, -9.482139e-003, -3.356781e-002, 1.967120e-002, 3.899557e-003, -3.078410e-002, 3.455663e-003, 7.366569e-002, -9.535593e-002, 9.312127e-002, 6.183005e-002, 8.041669e-003, -3.554290e-002, -5.299845e-003, 2.474913e-003, -4.780891e-004, 2.597081e-003, 3.030060e-002, -7.612172e-004, 9.983740e-002, -6.426937e-002, -1.160260e-002, 1.100811e-003, -5.847797e-004, -1.281837e-002, -4.921007e-003, 1.307429e-004, 4.488119e-003, -5.577019e-003, -1.716418e-002, -5.944602e-002, -1.041337e-002, -1.808858e-002, -1.953191e-002, 7.344332e-003, 4.524203e-005, -5.346715e-003, 1.294915e-003, 9.412060e-003, 1.690737e-003, -1.354289e-002, 1.164138e-002, -1.379190e-002, -1.393930e-002, 5.579282e-003, 4.753403e-003, 9.116593e-003, -2.524244e-003, 7.494676e-003, -1.088717e-003, -6.568599e-003, -1.490535e-003, -2.552828e-002, -1.435625e-003, 8.613199e-003, -2.165076e-002, -2.165076e-002, 8.613199e-003, -3.656187e-002, 2.680177e-002, 1.561386e-002, -1.002987e-002, -7.848546e-003, 3.823887e-003, 4.417865e-004, 7.602092e-003, 4.492169e-004, 3.429336e-003, -9.058421e-002, 6.534197e-002, 2.617458e-002, 2.617458e-002, 6.534197e-002, 6.864884e-002, 2.277390e-002, -4.014608e-003, -5.605124e-003, -9.222221e-003, 5.399530e-002, -5.381620e-003, 2.572126e-003, -2.195652e-003, -1.015196e-002, 3.421539e-002, 7.466539e-002, 1.180119e-002, 1.180119e-002, 7.466539e-002, -5.794485e-002, 1.652733e-002, 1.332990e-003, -1.554001e-003, -1.181742e-003,

© ISO/IEC 2004 — All rights reserved


Copyright International Organization for Standardization
Provided by IHS under license with ISO
No reproduction or networking permitted without license from IHS
Not for Resale

9.425747e-003, -1.674546e-003, -1.320434e-003, 9.013742e-004, -2.873198e-004, 3.538715e-002, 1.870322e-002, -3.640621e-003, -3.640621e-003, 1.870322e-002, -5.995343e-002, -2.181610e-002, -1.743266e-002, -2.080773e-002, 4.312851e-002, 9.008003e-004, -7.979260e-003, -6.262999e-003, -6.392002e-003, 1.786669e-002, 1.805339e-002, 8.361951e-002, 4.872943e-002, 4.872943e-002, 8.361951e-002, 5.960214e-002, 2.540868e-002, -4.161833e-003, 1.046557e-002, 4.138703e-002, 1.296082e-002, 7.891158e-003, 1.853361e-003, -6.802710e-003, 8.216108e-003, 8.906646e-002, -5.434217e-002, -5.363984e-003, -5.363984e-003, -5.434217e-002, 5.467555e-002, -3.268723e-004, 7.149231e-004, 3.587451e-003, -1.601963e-002, -2.272609e-002, -1.967355e-002, -5.628841e-004, 2.028543e-003, -2.953132e-003, -3.745777e-002, 3.736578e-002, 1.294985e-002, 1.294985e-002, 3.736578e-002, 7.210972e-002, 4.566999e-003, 6.314396e-003, 7.142520e-004, 1.792066e-002, -4.065910e-003, -1.087526e-002, 6.038129e-003, 1.454163e-003, -5.747076e-003, -3.853643e-002, -1.313207e-002, 5.936899e-003, 5.936899e-003, -1.313207e-002, 8.901661e-002, -1.451910e-003, 4.053498e-003, -1.142106e-002, -1.547189e-002, 8.102880e-003, 1.784894e-003, -8.424072e-003, -2.959621e-003, 5.245058e-003, -4.090504e-002, -2.768456e-002, 4.672446e-002, 4.672446e-002, -2.768456e-002, 4.443346e-002, 5.755595e-002, 1.123710e-002, 5.224590e-003, 3.122913e-002, 7.597969e-004, 7.848209e-003, 4.577584e-005, -4.441999e-004, -3.817302e-003, -4.783581e-002, 6.176513e-002, 4.039044e-003, 4.039044e-003, 6.176513e-002, -7.813613e-003, 7.640551e-003, 2.523705e-003, 6.736263e-003, 1.789586e-002, -1.765068e-002, -1.310971e-002, 8.182355e-003, 2.128134e-003, 3.815495e-004, -8.794074e-003, -3.314409e-002, -5.430892e-003, -5.430892e-003, -3.314409e-002, 2.118847e-002, 2.630627e-002, -1.683090e-003, 1.716217e-003, 9.625725e-003, -8.796382e-003, 7.135584e-003, -3.428107e-004, 8.077735e-003, -5.883883e-003, 5.317003e-003, 1.859968e-002, -1.959621e-003, -1.959621e-003, 1.859968e-002, 3.009166e-002, 3.847639e-002, 1.776264e-002, 4.142657e-003, 3.435357e-002, 4.667937e-003, -6.737152e-004, 8.172826e-003, 1.633937e-003, 1.033051e-002, 4.152032e-002, -2.954460e-002, -5.968867e-002, -5.968867e-002, -2.954460e-002, 4.033108e-002, 3.810012e-002, 9.806274e-003, -1.877445e-002, -1.913717e-002, 1.110269e-002, 3.486355e-002, -1.430869e-005, -1.032917e-002, 1.527279e-004, 2.976471e-002, 1.891669e-002, 1.403559e-002, 1.403559e-002, 1.891669e-002, 2.784471e-002, 1.170918e-002, 4.020885e-003, 2.151580e-003, 7.118528e-002, -9.090075e-003, -3.836231e-003, 1.793249e-004, -2.479537e-003, -6.891321e-003, 8.148573e-003, 3.425436e-002, 2.484204e-002, 2.484204e-002, 3.425436e-002, 4.860198e-002, 2.424822e-002, 5.603657e-003, 1.962098e-005, 6.885819e-003, -1.371274e-002, -4.998567e-003, -3.444181e-003, -1.794399e-003, -5.865748e-003, 4.769006e-003, 4.416798e-002, 2.135701e-002, 2.135701e-002, 4.416798e-002, -3.153508e-002, -1.060641e-001, -3.089148e-002, -7.325483e-003, -3.303711e-003, -1.419459e-002, -6.459785e-003, -1.465082e-002, 1.159680e-002, -1.358136e-002},
{-1.571619e-003, -2.798389e-003, 4.958833e-004, -3.386218e-003, 1.392640e-002, -8.313970e-003, -8.721671e-003, 1.803927e-002, -4.599632e-003, -1.122207e-003, -9.937346e-003, -1.194612e-002, -9.937346e-003, -1.122207e-003, -4.599632e-003, 1.803927e-002, -8.721671e-003, -8.313970e-003, 1.392640e-002, -3.386218e-003, 4.958833e-004, -2.798389e-003, 1.978966e-003, 1.456167e-003, 1.783641e-003, -2.267559e-002, 2.346142e-002, 6.139410e-003, -1.402851e-002, -2.105734e-003, -1.311624e-002, -1.428027e-002, 1.202779e-002, 5.181560e-002, -9.706812e-003, 1.275402e-002, 4.628203e-002, 2.176277e-004, 1.757301e-002, -7.558113e-003, 1.644369e-002, 1.145550e-002, -1.565284e-002, 9.301530e-003, 1.439641e-002, 1.339884e-002, 3.417616e-002, -1.365410e-002, -2.931187e-002, -5.810951e-003, -4.840080e-002, -6.898241e-002, -5.383131e-003, -3.435579e-002, 4.568054e-002, -3.864139e-002, -4.742554e-002, -2.966882e-002, 5.184661e-003, 3.923338e-002, -3.466362e-002, 1.115357e-002, -7.045880e-003, -3.612699e-002, -8.839024e-003, 2.279839e-002, 2.691463e-002, -1.196591e-002, 2.787951e-002, -2.403448e-002, -6.865463e-002, 1.588034e-002, 4.747744e-002, 5.692576e-002, -6.049102e-003, 3.969500e-002, 2.799169e-002, 3.858409e-003, -7.554329e-003, 1.778226e-002, 1.683642e-002, 4.381705e-002, 4.529193e-003, 2.831272e-003, 6.516297e-003, -1.129314e-002, -3.254920e-002, -6.002905e-003, 2.255015e-002, 6.500442e-003, 5.208832e-002, -1.235174e-002, 5.707141e-003, -1.736958e-003, -2.771138e-002, 4.510594e-002, -1.075336e-002, 1.528535e-002, 4.907649e-002, 7.486850e-003, 1.693776e-002, -6.675764e-003, 5.975874e-002, 4.326908e-002, -5.947682e-003, -2.656460e-002, -5.922650e-002, -1.084403e-003, -1.098404e-002, -5.916652e-004, -1.371530e-002, 6.553571e-002, -1.235373e-002, -3.417739e-002, 2.280896e-003, 2.203455e-002, 2.317446e-002, -4.551311e-002, -6.551041e-003, 8.605517e-002, 7.603446e-003, 1.076902e-002, -1.679948e-002, -6.432697e-003, 4.221038e-002, 2.614034e-002, -4.458054e-002, -1.985007e-002, 2.004499e-002, 5.430083e-002, 3.830997e-003, -3.715060e-003, -2.683049e-004, -1.788876e-002, 3.502661e-002, 7.473669e-003, 8.087601e-002, 4.433221e-002, 4.411386e-003, 1.538026e-002, 6.437424e-002, 3.927293e-002, -1.653822e-002, -2.451099e-002, -1.893669e-002, -3.807560e-002, -2.846827e-002, -2.797025e-002, -8.121239e-002, -2.824173e-003, -1.647669e-002, 3.297049e-002, -1.715186e-002, -2.993659e-002, 2.008071e-002, 1.503439e-002, 1.357528e-002, 3.105243e-002, -2.668943e-003, -4.267472e-002, 6.785042e-002, -1.052259e-002, 8.200304e-002, 5.684836e-002, 2.148631e-002, -1.093668e-002, 1.327137e-002, -6.376868e-004, 1.487836e-002, -6.417393e-002, -4.697391e-002, 1.084752e-001, 5.752660e-002, 3.312832e-002, 5.953753e-002, -4.070143e-002, -3.920554e-002, 4.399485e-002, -5.816564e-002, -3.921563e-002, 5.561838e-002, -6.269383e-003, 1.795132e-002, 5.609369e-002,


© ISO/IEC 2004 — All rights reserved

Copyright International Organization for Standardization
Provided by IHS under license with ISO
No reproduction or networking permitted without license from IHS
Not for Resale

1.134337e-002, 1.073096e-002, 6.023069e-003, 1.908002e-002, -9.195412e-003, -1.608800e-002, -2.904871e-002, -2.420600e-002, 5.815577e-002, 7.743622e-002, 5.336360e-002, -2.292894e-002, 1.492351e-003, -7.494325e-003, 2.591255e-002, 8.363094e-003, -3.069745e-002, -6.302306e-002, -4.179129e-002, 3.365651e-002, -2.643513e-002, -9.530655e-003, -2.090184e-002, -8.588066e-003, 2.952501e-002, -7.408754e-003, -9.998138e-003, -2.631067e-002, 1.718095e-002, -1.192460e-002, 2.612794e-002, 3.857311e-002, -7.184151e-002, -3.520526e-003, 2.341938e-002, -5.101012e-002, 1.793506e-002, 1.040871e-002, -1.170263e-002, -2.859960e-002, -3.908089e-002, -3.625722e-002, 3.098638e-003, -1.515058e-003, -1.729362e-002, 1.270815e-002, 2.596970e-003, -1.236519e-002, -5.515712e-003, -8.866602e-003, 5.720537e-003, 2.100834e-002, 2.198468e-002, 4.695012e-002, -3.847730e-002, -8.452685e-002, -1.010874e-002, -5.603134e-002, 7.035943e-002, 4.205740e-002, 3.379583e-002, -2.540596e-002, 2.617841e-003, -3.527213e-002, -6.901102e-003, -2.313179e-003, -1.506648e-003, -1.000904e-002, -2.230234e-003, -2.278086e-003, -9.490401e-003, 1.013324e-002, 1.016506e-002, 1.476877e-002, 3.627471e-002, 5.737195e-002, 4.146971e-002, 8.316884e-002, 6.126828e-002, -8.309163e-002, 5.387800e-002, -1.271983e-002, 1.277393e-002, 1.121339e-001, 5.234895e-002, 1.034590e-002, 7.468487e-003, -2.851270e-002, -1.757770e-002, -5.378569e-003, -1.444726e-003, -3.663645e-003, 5.164468e-003, 8.943929e-003, 2.402955e-002, 1.684550e-002, 2.878147e-002, 2.933045e-002, 4.653150e-002, 4.065998e-002, -8.437230e-002, -6.085465e-002, -4.237136e-002, 2.599262e-002, -4.027236e-002, -5.048675e-002, -1.967674e-002, -7.394066e-003, -1.185474e-002, -1.405325e-002, -5.870315e-003, -1.394044e-003, -2.155313e-003, -4.389168e-003, 1.326311e-002, 2.330356e-002, 1.553227e-002, 1.954058e-002, 2.463197e-002, 3.405694e-002, -5.970060e-003, -5.295554e-002, -8.688765e-002, 5.313709e-002, -4.205537e-003, -1.211606e-002, 7.827617e-003, -1.915638e-002, 4.008345e-002, 1.355940e-003, 1.355940e-003, 4.008345e-002, -1.915638e-002, 7.827617e-003, -1.211606e-002, -3.143567e-002, -4.661756e-002, 1.030392e-001, -2.892076e-002, -9.709683e-002, -4.980180e-002, 8.442808e-004, 7.687190e-002, 1.053910e-001, 2.425183e-002, -1.684091e-002, -6.946339e-003, -2.984046e-002, 6.952019e-002, -2.140354e-002, 3.260965e-002, 5.302122e-003, -1.583311e-002, -1.302673e-002, -1.030001e-002, -1.055527e-001, -1.658175e-001, 2.268018e-003, 6.789290e-002, -7.035558e-002, 1.800263e-002, 2.099011e-002, 9.431941e-003, -2.118332e-002, -1.835292e-002, -2.217766e-002, -5.365394e-002, 2.141197e-002, -8.199558e-002, -7.333589e-003, -5.483855e-002, 2.878049e-002, 4.910399e-002, 2.808157e-002, -6.311248e-003, -1.411970e-002, -3.116855e-003, -4.086861e-002, -1.342609e-003, 2.509316e-004, 1.149711e-002, -3.969796e-002, -1.094068e-002, 2.283405e-002, 2.112379e-002, 1.279917e-003, -2.765924e-003, 4.431322e-003, -1.623494e-002, -4.076431e-002, -4.393215e-003, 2.791717e-002, 3.592939e-002, 3.531738e-003, 7.269145e-003, 1.008109e-002, -4.798418e-004, -2.842566e-003, 7.849702e-003, -7.217639e-003, -3.860952e-002, 2.584118e-003, 6.359634e-003, -8.092889e-005, 7.427861e-004, 9.979987e-003, 2.854168e-003, 2.854168e-003, 9.979987e-003, 7.427861e-004, -8.092889e-005, 6.359634e-003, 2.196896e-002, -8.519655e-002, 3.569738e-002, 5.690450e-002, 3.916524e-002, 4.883536e-002, -8.410712e-002, -7.144498e-002, 1.439107e-001, 6.414143e-002, -1.813376e-002, -1.367464e-002, 1.299236e-002, -6.152978e-002, 5.686894e-003, 5.186079e-004, -2.072649e-002, -1.080282e-002, 3.163454e-002, -2.182350e-002, 6.603518e-003, -2.712561e-002, -5.052839e-002, 1.218922e-001, -6.466431e-002, -6.821683e-003, 2.628838e-003, -1.956964e-002, -1.948091e-002, -1.043841e-002, -6.394792e-002, -1.285935e-001, 6.189767e-002, -5.878834e-003, 3.024147e-002, -3.528962e-002, -6.978152e-003, -2.240969e-003, -4.325530e-003, -3.813351e-003, 8.057115e-004, 6.413580e-003, -3.516150e-002, 2.166205e-002, 4.774954e-002, -5.249054e-003, -7.899468e-003, 5.258643e-003, -5.955208e-003, -6.815597e-004, 4.434173e-003, 7.004914e-003, 1.161117e-002, 3.826266e-003, 1.427723e-003, 1.805818e-002, -2.138260e-002, -1.387128e-002, 2.774230e-003, -5.103778e-003, 7.284251e-005, 6.362640e-003, 1.317279e-002, 2.614367e-002, 1.577455e-002, 4.073541e-003, -2.710597e-003, 2.251654e-003, -1.308922e-002, 5.432832e-003, -2.681537e-002, -8.600925e-004, -8.600925e-004, -2.681537e-002, 5.432832e-003, -1.308922e-002, 2.251654e-003, -8.383252e-003, -2.291461e-002, -7.012164e-002, -1.001962e-002, 4.572872e-002, 2.731431e-002, 1.351008e-002, 8.059953e-003, 6.336672e-002, 6.698817e-002, 1.213964e-002, -8.317862e-002, -2.663395e-002, -1.204560e-001, -3.065321e-002, -3.948080e-003, -1.336867e-003, 9.243151e-004, -3.111778e-002, 2.383656e-002, -4.139529e-002, 5.121786e-003, 7.128669e-002, -2.900609e-002, -7.017471e-002, -6.941505e-003, -6.042450e-003, -1.003152e-002, -9.268663e-003, -9.031887e-003, -2.646197e-002, -6.075556e-002, -5.384977e-002, -1.766920e-002, 7.052503e-002, 9.053070e-003, -2.876591e-002, -1.245366e-002, -1.345161e-002, -7.011443e-003, -1.268512e-002, 1.448140e-002, -2.761065e-004, -6.708794e-002, -4.893958e-002, 5.530361e-003, 1.252961e-002, 2.073403e-003, -1.404482e-002, -1.033393e-002, -1.892335e-003, 5.793296e-003, -5.041430e-003, -1.618040e-002, -2.156102e-002, -4.151670e-002, -1.688067e-002, -1.435635e-004, -3.021231e-003, -1.223731e-002, -8.082849e-003, 5.148562e-003, -2.464591e-003, 7.594344e-003, -7.488543e-003, -3.571748e-002, 2.760396e-003, 9.676418e-003, 2.794497e-002, -8.933111e-003, -7.170967e-003, -3.994336e-002, -3.994336e-002, -7.170967e-003, -8.933111e-003, 2.794497e-002, 9.676418e-003, 1.575915e-002, -5.357646e-002, -1.055144e-001, 8.320268e-002, 4.364706e-002, 2.613866e-002, 1.036752e-002, 5.390305e-002, 6.790832e-002, -3.385927e-002, 5.795559e-002, 3.105096e-002, -1.119993e-001, 8.939704e-002, 5.120935e-002, 2.773180e-002, 2.820333e-002, 1.374057e-002,

© ISO/IEC 2004 — All rights reserved


Copyright International Organization for Standardization
Provided by IHS under license with ISO
No reproduction or networking permitted without license from IHS
Not for Resale

3.067970e-002, -2.100542e-002, -4.327655e-002, -1.286543e-001, 2.304690e-002, -1.081389e-001, -4.813596e-002, 1.244486e-002, 2.331551e-002, 1.233207e-002, 1.746316e-002, 6.429069e-003, -2.743420e-002, -6.941787e-003, 3.189260e-002, -6.067825e-002, -9.061158e-002, 1.130619e-002, 8.991286e-003, -6.889878e-003, 2.311887e-003, 6.471497e-003, -3.530046e-003, 3.485579e-002, 2.521975e-002, 6.704234e-002, -3.012252e-002, -3.634029e-002, -2.171419e-002, 1.486090e-003, -3.730309e-003, -5.444409e-004, -2.470082e-003, 7.878882e-003, 2.905810e-002, 2.696956e-002, 2.248581e-003, -3.596117e-002, -3.640925e-002, -3.890485e-003, -9.161225e-003, -2.652801e-003, -3.227361e-003, -1.179951e-003, 1.649635e-002, 2.383279e-002, 1.864154e-002, -1.803219e-002, -1.178767e-002, -2.039600e-002, 2.569675e-002, 2.569675e-002, -2.039600e-002, -5.014261e-002, 1.727426e-002, -2.241659e-002, 1.438376e-003, -2.057880e-002, -2.426832e-002, -8.067495e-003, 1.763783e-002, -1.482757e-003, -1.007873e-002, -5.621014e-002, 1.987295e-002, 1.514990e-002, 1.514990e-002, 1.987295e-002, 6.049579e-002, 1.670016e-002, 2.730458e-003, 2.553455e-003, -4.044833e-003, -2.633173e-002, -1.635359e-002, -1.677485e-004, -4.014664e-003, -6.788287e-003, 3.222154e-002, 1.023241e-001, 3.251247e-002, 3.251247e-002, 1.023241e-001, -2.749146e-002, 3.179077e-002, 1.403722e-002, 5.008753e-003, 1.320455e-002, -1.442969e-002, 7.723280e-003, 1.911908e-003, -3.178732e-003, 3.665736e-003, 2.630340e-002, -3.669491e-003, 1.065524e-002, 1.065524e-002, -3.669491e-003, 1.748538e-002, -4.067883e-002, -2.001235e-002, -2.971874e-002, -1.935549e-002, 1.982730e-002, -2.029044e-002, -5.985832e-003, -1.707078e-002, -1.486335e-002, 7.401718e-002, -2.482810e-002, -3.276931e-002, -3.276931e-002, -2.482810e-002, -3.578660e-002, 1.254347e-002, 1.362104e-002, 5.937702e-004, -3.711920e-002, -7.986984e-003, 4.192904e-003, 1.152437e-002, -3.055840e-003, 4.456845e-003, -1.022490e-002, -1.335298e-002, 1.450657e-002, 1.450657e-002, -1.335298e-002, 5.126042e-002, -1.827982e-002, 7.100512e-004, 3.396313e-003, -9.098632e-003, 4.454390e-002, 1.199157e-002, 1.186738e-002, -2.215032e-003, -1.589613e-002, 3.225928e-004, 2.372889e-002, 4.140541e-005, 4.140541e-005, 2.372889e-002, 4.379758e-002, 3.293318e-002, -4.131342e-003, -2.058644e-003, -2.396980e-003, 3.006015e-002, -9.855508e-003, 5.790669e-003, -1.756470e-003, 5.638863e-003, -5.626342e-002, -2.455612e-002, -1.725599e-002, -1.725599e-002, -2.455612e-002, -4.725472e-002, -2.542296e-002, -2.074243e-002, -1.368146e-002, 3.712461e-003, -1.857164e-002, -1.387081e-002, -7.545802e-003, -4.996445e-003, -4.496214e-003, -6.610663e-002, -1.097801e-002, 5.425007e-002, 5.425007e-002, -1.097801e-002, -5.005194e-002, -1.765878e-002, 1.543233e-002, -2.523008e-002, -3.983281e-002, -2.692756e-003, 1.557995e-004, 1.023379e-003, -1.382228e-002, -8.767916e-003, 5.161998e-002, 8.886960e-002, 1.026136e-002, 1.026136e-002, 8.886960e-002, -4.333881e-002, 7.498176e-003, 4.363495e-003, 7.491358e-004, -2.527681e-003, -1.001764e-003, 1.301604e-002, 4.547639e-003, 1.486969e-003, -8.291844e-003, 2.790186e-003, 3.963455e-002, -3.550336e-003, -3.550336e-003, 3.963455e-002, -3.240421e-002, -1.161810e-003, -7.875223e-004, 8.151297e-003, 7.473819e-003, -1.197575e-002, -1.673729e-002, 1.152124e-003, 4.864702e-003, 1.090043e-002, 4.233696e-002, -2.671424e-002, 2.602933e-002, 2.602933e-002, -2.671424e-002, 3.733693e-002, 2.584449e-002, 2.160895e-002, 1.654689e-002, 3.952465e-002, 1.331675e-002, 1.078946e-002, 7.401615e-003, 1.092192e-002, 1.898409e-002, 3.352430e-002, 1.131062e-002, -3.940890e-002, -3.940890e-002, 1.131062e-002, 1.431744e-001, -6.048641e-002, -1.152848e-002, 2.550655e-002, 9.581770e-002, 4.219194e-002, 1.475202e-002, -1.776881e-002, 4.070572e-003, 1.149635e-002, -2.174824e-002, -1.433825e-002, -3.485355e-003, -3.485355e-003, -1.433825e-002, 3.410199e-002, 1.244882e-003, 7.159124e-003, -9.355477e-003, -1.020067e-002, -8.024072e-003, -3.073440e-003, 2.395288e-003, -2.636277e-003, -1.183208e-002, -2.172205e-002, -3.426551e-002, -1.880596e-002, -1.880596e-002, -3.426551e-002, 7.263940e-002, 1.249374e-002, 1.412453e-004, 6.500915e-003, 1.280904e-002, -3.607574e-003, -1.664780e-002, -4.519515e-003, 3.540970e-004, -8.998409e-004, -2.064471e-002, -4.274317e-002, -1.061797e-002, -1.061797e-002, -4.274317e-002, 2.642870e-002, 2.177650e-003, 3.249471e-002, 2.157726e-002, -2.827774e-002, 3.426134e-004, -1.390805e-002, 5.989319e-003, -2.080558e-003, 1.463274e-002},
{9.335102e-005, -8.206222e-004, -2.189561e-003, 1.333179e-003, 1.368179e-002, -8.882227e-003, -1.207107e-003, -8.783863e-003, -2.350376e-002, 1.298270e-003, 1.908789e-005, 2.522925e-002, 1.908789e-005, 1.298270e-003, -2.350376e-002, -8.783863e-003, -1.207107e-003, -8.882227e-003, 1.368179e-002, 1.333179e-003, -2.189561e-003, -8.206222e-004, -9.487605e-003, -1.227679e-002, 3.373838e-002, 7.027026e-003, -6.575739e-003, 1.234437e-002, -4.659918e-002, 4.534913e-002, -3.172774e-002, -9.752084e-003, 1.607528e-002, -9.787941e-003, 1.739753e-002, 1.295241e-002, -3.216307e-002, -2.636714e-002, 2.675193e-002, -1.018006e-002, -1.402148e-002, -2.631970e-003, -2.582633e-002, -1.138493e-003, -6.089151e-003, -1.316866e-002, 9.964825e-003, 1.283572e-002, -1.953118e-002, -2.808982e-002, 1.905608e-002, 1.743293e-002, 4.994686e-002, 3.727612e-002, 3.053324e-002, 1.195142e-002, 1.059368e-001, 3.758900e-002, 2.488852e-002, 5.044160e-002, 8.690523e-003, -1.905192e-002, 1.890073e-002, 4.912103e-002, -1.081126e-003, 1.644909e-003, -7.074576e-003, -4.403522e-002, -3.129073e-003, 1.864946e-002, 3.717831e-002, -2.049699e-002, -2.910580e-002, -4.473646e-003, -4.288283e-004, 7.651326e-002, -4.113084e-002, -9.424851e-002, 1.098946e-002, -4.614374e-002, 6.331064e-002, -1.509471e-002, 1.587027e-002, -1.147450e-002, -5.657167e-002, -4.092729e-002, -1.434166e-002, -2.582281e-003, -2.423094e-002, -4.348801e-002, 2.058399e-002, -1.774580e-002, -2.348913e-002, 3.743821e-003, -4.498572e-002, -6.458604e-002, -


© ISO/IEC 2004 — All rights reserved

--`,,```,,,,````-`-`,,`,,`,`,,`---

Copyright International Organization for Standardization
Provided by IHS under license with ISO
No reproduction or networking permitted without license from IHS

Not for Resale

4.542438e-002, 4.173183e-002, 4.561477e-002, -5.307689e-002, -6.632703e-003, -4.729947e-003, -1.956091e-002, 1.064942e-002, 3.811718e-002, -5.700047e-002, 1.114388e-002, -4.785614e-003, -4.828227e-002, 1.711092e-002, -7.336185e-003, -1.342372e-004, 1.119296e-002, -4.988494e-002, 1.256734e-002, 6.822725e-003, 2.060356e-002, -1.622454e-003, -4.536617e-002, 8.245391e-003, 4.245192e-004, 2.483311e-002, -8.195081e-003, -4.112433e-002, 3.580785e-003, 4.493719e-003, 8.350605e-002, 3.701489e-002, 3.837729e-002, -8.579579e-003, -1.708482e-002, 8.500187e-002, 2.950943e-002, -8.527739e-003, 1.679939e-002, -2.028205e-002, -4.602402e-002, -1.871942e-002, 3.857151e-003, 8.045075e-002, -3.908637e-003, -3.014545e-002, 2.468517e-002, 2.068596e-002, 5.020736e-002, 3.033903e-002, 5.407121e-002, 1.391515e-001, 2.765363e-003, 1.097700e-002, 2.471209e-002, -3.582994e-002, 3.033954e-002, -3.395157e-002, -2.341348e-002, 2.828060e-002, 6.015019e-003, -1.506184e-002, -3.166832e-002, 4.950541e-002, 4.788828e-002, -6.253108e-002, -2.846381e-002, 3.124356e-002, -1.072510e-002, 2.622412e-002, 1.349204e-002, 4.699474e-002, 1.007659e-002, 7.432187e-003, -2.620803e-002, 1.295808e-002, 1.609184e-002, 2.200711e-002, -2.761367e-003, -3.043254e-002, 3.695146e-002, 2.947598e-002, 3.866716e-002, 1.386934e-002, -3.182716e-002, 1.709672e-001, -3.734596e-002, 9.698985e-003, -1.638020e-002, -2.828950e-002, -2.628246e-003, 1.743115e-002, -2.524881e-003, -2.323466e-002, -2.168155e-002, -1.633068e-002, -1.757587e-002, 3.644084e-004, 1.550512e-002, -3.339690e-002, -6.043608e-002, -2.344450e-002, -4.867830e-004, -6.682442e-002, -3.232177e-002, -6.043720e-002, -5.917464e-002, 6.472018e-002, 4.879758e-002, -2.217815e-003, -3.308450e-003, 4.752441e-003, -3.806507e-002, -2.292860e-002, -8.273730e-003, -1.916290e-002, 1.276212e-002, 2.405900e-002, 3.232183e-002, 8.621485e-002, -2.846513e-002, -3.517355e-002, 7.977871e-002, -6.563850e-004, 1.380355e-002, 1.441390e-002, 6.087746e-002, -1.093895e-002, 4.381233e-002, 2.925451e-002, -1.208287e-002, -7.646543e-003, -9.034396e-003, -4.082890e-002, -2.362072e-002, -2.154838e-002, -4.224607e-002, -2.875658e-002, -3.698927e-002, -1.748698e-002, -1.983611e-002, 1.218339e-002, -1.470290e-002, -1.211156e-002, 3.538453e-002, -2.794138e-002, -1.697036e-002, -5.031408e-002, 3.684569e-002, -1.752353e-002, -3.315289e-002, -5.173213e-003, 3.896326e-003, -2.454368e-002, -4.702267e-002, -1.617713e-002, -1.989991e-002, -1.046969e-002, -1.561151e-002, -1.288312e-003, 8.760815e-003, 1.342364e-002, 1.188637e-002, 1.039869e-002, -2.745370e-003, -3.258641e-004, 1.673402e-002, -4.980883e-002, 4.443272e-002, -1.452053e-002, 1.193992e-001, 4.357425e-002, -1.328588e-002, 1.224231e-003, -7.430250e-004, -3.157737e-002, -1.790647e-002, -1.260396e-002, -6.950548e-003, 3.907603e-003, 2.963586e-003, 7.298347e-004, -2.364386e-003, 9.119273e-003, 5.157943e-003, 5.337117e-003, 3.368417e-002, 2.432844e-002, -7.062575e-002, 1.353843e-002, 2.624057e-002, -8.180497e-004, -9.187058e-004, 3.036788e-002, 1.903545e-002, 2.178064e-002, -1.940566e-003, -2.916209e-002, -1.161277e-002, 1.242854e-003, 6.231085e-003, 1.967132e-003, -4.240831e-003, -1.443877e-003, 7.304305e-003, 3.127268e-003, 2.682228e-002, 2.751279e-002, -7.047434e-003, 7.860677e-002, 1.919603e-002, 2.725855e-002, -1.707045e-002, -3.532346e-003, -4.991250e-003, -5.824069e-003, -1.262759e-002, -2.122995e-002, -2.122995e-002, -1.262759e-002, -5.824069e-003, -4.991250e-003, -3.532346e-003, 1.275989e-002, -5.062672e-002, 3.070687e-002, -5.613936e-003, -4.645092e-002, -2.743368e-002, 1.946714e-002, -3.163068e-002, -1.458366e-001, -8.237852e-002, 3.591146e-002, 8.316801e-002, 1.361463e-002, 4.053819e-002, -5.101342e-002, -1.893867e-002, 3.199975e-003, 9.586005e-005, -3.923508e-003, 9.919024e-003, 6.900876e-002, 6.098922e-002, -6.114258e-002, -7.351958e-002, 4.752672e-002, 4.985663e-002, -2.031118e-003, -2.852953e-003, -5.190371e-003, 7.100570e-003, 3.024775e-002, 1.828932e-002, -5.920742e-003, -7.490118e-003, -2.974010e-002, -3.873914e-003, -2.285017e-003, 1.562209e-003, -6.930511e-003, 2.503487e-003, 4.290385e-003, 4.889875e-003, 9.800997e-003, 9.512804e-002, -5.592826e-002, -3.262262e-002, 1.759785e-003, -1.889938e-002, -8.639809e-003, -9.740432e-003, 4.256507e-003, 9.812832e-004, -7.002134e-003, 1.180667e-002, 2.551575e-002, -6.735864e-003, -6.222809e-003, -3.309316e-003, -1.439293e-002, -1.975333e-002, -2.320804e-003, -1.147536e-003, 3.762449e-003, 5.875808e-003, 2.136200e-002, -1.574696e-002, 8.179419e-003, 4.167151e-003, 3.813016e-003, -6.932736e-003, 2.476290e-002, -8.573945e-002, -8.573945e-002, 2.476290e-002, -6.932736e-003, 3.813016e-003, 4.167151e-003, 4.900405e-002, 2.464502e-002, -2.530825e-002, -4.022078e-002, -2.893810e-002, -2.780221e-002, -4.063328e-002, -1.027988e-001, -6.631074e-002, 3.099777e-002, -1.923830e-002, -7.769613e-002, 7.410298e-002, 3.816926e-002, -1.568510e-002, -1.570318e-003, -1.249560e-002, -5.753177e-002, -2.856750e-002, 2.457447e-002, 4.268214e-004, 8.356015e-002, -5.259446e-002, -5.133105e-002, 3.583265e-002, 2.334956e-002, 6.016024e-003, -4.228787e-003, 2.650752e-002, 3.497844e-002, 4.811716e-002, -3.049484e-002, -7.626977e-002, 1.274707e-002, 6.804142e-002, -5.013881e-003, 2.307800e-002, 9.069870e-003, 5.145667e-003, 4.577218e-004, 9.235327e-003, -1.684645e-002, -3.577205e-002, -1.073200e-001, -9.394169e-002, 6.816250e-003, 7.690479e-003, 1.508808e-003, 4.059498e-003, 2.967942e-003, -1.755002e-002, -8.084094e-003, -9.847842e-003, -1.321142e-002, -3.878358e-002, -5.559451e-002, -1.330709e-002, 2.307550e-002, 2.977110e-003, -1.480560e-003, -7.512584e-004, -4.934954e-004, 9.012788e-004, -1.965085e-003, -8.456021e-004, -2.084456e-002, 1.442759e-002, 1.677179e-002, 2.895673e-002, -3.333704e-002, 1.020067e-002, -3.044541e-002, -3.044541e-002, 1.020067e-002, -3.333704e-002, 2.895673e-002, 1.677179e-002, -4.465327e-002, -6.539171e-002, -3.708953e-002, -4.211914e-002, 5.701203e-002, 1.526404e-002, 1.181055e-002, -

© ISO/IEC 2004 — All rights reserved


Copyright International Organization for Standardization
Provided by IHS under license with ISO
No reproduction or networking permitted without license from IHS
Not for Resale

6.499755e-003, -1.161447e-001, -6.300758e-003, 5.828205e-002, 1.202258e-001, 3.920146e-002, -8.786931e-003, -6.049239e-002, -1.111158e-002, 1.860525e-002, -3.148338e-003, 3.303679e-002, 7.476566e-002, -3.189280e-002, -7.436895e-002, -2.549688e-002, -2.367315e-002, -3.020012e-002, -4.130912e-002, -6.961906e-003, 5.405463e-003, 1.869578e-002, 3.107096e-002, 1.939821e-002, 5.754905e-002, 1.062534e-002, -3.439161e-002, -2.089931e-002, -2.859295e-002, -1.833256e-002, -2.019215e-002, -1.181637e-002, -3.023016e-003, -8.324523e-004, 2.753937e-002, 4.286974e-002, 2.972386e-002, 3.329032e-002, 1.780899e-002, -1.577251e-004, -1.091232e-002, -2.610860e-002, -2.047167e-002, -3.281556e-003, -7.051321e-004, 7.440094e-003, 1.229907e-002, 4.818153e-002, -1.955490e-003, 1.293341e-002, 7.222048e-003, -4.587160e-004, -9.225585e-003, -1.622497e-002, 3.775300e-003, 1.109360e-002, 1.157013e-002, 2.565077e-002, -4.475224e-003, -5.443211e-003, 2.660522e-004, -1.101060e-002, -1.355034e-002, -1.442739e-003, -1.196227e-002, -1.196227e-002, -1.442739e-003, -1.355034e-002, -1.101060e-002, 2.660522e-004, 3.859301e-003, 2.168238e-002, -5.341107e-002, -1.773210e-001, -6.672771e-002, -1.421020e-003, 3.911568e-002, 7.578617e-002, 1.029466e-001, 7.014996e-002, 1.077775e-001, 1.626011e-002, -3.056612e-002, -6.606364e-002, 1.393883e-001, -3.600914e-003, 9.069590e-003, 1.875430e-002, 5.422999e-003, -6.543116e-002, -1.822649e-001, -4.847593e-002, -1.764301e-002, -4.307008e-002, 6.682439e-002, 2.357971e-002, 1.621434e-002, 2.155378e-002, 1.790693e-003, -7.502041e-003, -2.269899e-002, -3.959012e-002, 2.396778e-002, -1.635946e-002, 8.204130e-002, 4.887625e-002, 2.876631e-002, -3.388849e-003, -5.483486e-004, 5.712709e-003, -1.405360e-002, -9.423726e-003, -1.037980e-002, 2.348523e-002, 3.004131e-002, 5.140564e-002, 8.548902e-003, 1.727418e-002, 2.930978e-003, 3.286352e-003, -1.186255e-002, -9.573511e-003, -3.986539e-004, 9.965403e-003, -5.272819e-003, -8.100281e-003, 1.078636e-002, 1.292655e-002, 2.381136e-002, 7.978787e-003, 8.125461e-003, -8.881828e-003, 1.170920e-003, 1.320338e-002, 1.154031e-002, 2.481853e-002, -1.137681e-002, -1.675864e-002, -1.321772e-002, -1.321772e-002, -1.675864e-002, 1.112590e-002, 7.178817e-002, 2.092934e-002, 1.214736e-002, 5.437042e-002, -4.011081e-003, 4.314306e-002, 3.543228e-003, 2.000045e-003, 2.615266e-002, 1.712800e-002, -5.826469e-002, -2.044482e-002, -2.044482e-002, -5.826469e-002, 7.175840e-002, -2.680563e-002, -3.717432e-003, 3.177777e-003, -2.814359e-003, -6.470575e-002, -3.134344e-002, -9.805350e-003, -5.958442e-003, -9.587392e-003, -3.224534e-002, 4.426850e-002, 1.599359e-002, 1.599359e-002, 4.426850e-002, 1.121857e-001, 9.645686e-003, 3.726951e-003, 1.711485e-002, 6.212059e-003, -5.815151e-002, -3.407976e-003, -1.758920e-003, 2.380696e-003, -2.251176e-002, 2.257176e-003, 2.514743e-002, -2.233335e-002, -2.233335e-002, 2.514743e-002, 3.506227e-002, 2.906102e-002, -2.505069e-003, 1.270355e-003, 9.430063e-002, -2.215281e-003, 1.101856e-002, -2.014817e-003, 8.376353e-003, 2.966224e-003, 2.647089e-002, 1.991797e-003, -2.222671e-002, -2.222671e-002, 1.991797e-003, 8.025164e-002, 2.647351e-002, -2.924943e-003, -5.168023e-003, 2.824029e-002, 2.338157e-002, 5.956995e-003, 3.357461e-003, 6.632045e-003, 1.325488e-002, -4.929253e-002, -4.092104e-002, -1.612014e-002, -1.612014e-002, -4.092104e-002, -1.290120e-002, -2.074222e-004, -9.743909e-003, -3.765173e-003, -1.545186e-002, 5.592615e-002, 2.313014e-004, -8.900250e-003, -7.822062e-004, 2.046395e-002, 7.590816e-002, -2.186702e-002, 7.377028e-003, 7.377028e-003, -2.186702e-002, -4.991389e-002, 1.338886e-002, 4.927511e-003, -1.649662e-003, -2.206869e-002, 6.627159e-003, 1.759336e-002, -1.485116e-003, -6.778455e-003, -1.684210e-002, -3.774057e-002, -6.501887e-002, 8.030802e-003, 8.030802e-003, -6.501887e-002, 4.679120e-002, 1.461350e-002, 1.243252e-002, -1.555426e-002, 4.821175e-004, 2.076489e-002, 6.964265e-003, 5.123388e-003, -5.878742e-003, -1.108305e-002, -4.035917e-002, 4.977124e-003, 1.930496e-002, 1.930496e-002, 4.977124e-003, -2.889638e-002, -9.995838e-003, 4.360985e-003, 1.080053e-002, -3.035650e-003, -2.371164e-002, -7.374277e-003, 1.409483e-003, 5.859967e-004, -2.710764e-003, 5.386843e-002, 3.979605e-002, 1.231718e-002, 1.231718e-002, 3.979605e-002, -3.551578e-002, -2.322012e-002, -8.177404e-003, -9.579884e-004, -5.090260e-003, 9.522610e-003, -2.136134e-002, -5.877323e-003, 4.224993e-003, 2.314618e-002, -2.595588e-002, -1.256705e-002, 1.947055e-002, 1.947055e-002, -1.256705e-002, -1.630540e-002, 8.559742e-004, -2.622513e-003, 2.009845e-003, -2.780245e-002, 1.834040e-002, 1.685591e-002, 1.517364e-003, -2.585750e-003, -1.328329e-002, 6.951989e-002, 2.614986e-002, -5.409277e-003, -5.409277e-003, 2.614986e-002, -1.333074e-002, 1.327250e-002, 1.395166e-002, -4.204293e-003, -7.642927e-004, -2.641742e-003, 6.328307e-003, -8.716422e-003, 1.903745e-003, 3.198140e-003, 2.837329e-002, -8.234502e-003, -3.292830e-002, -3.292830e-002, -8.234502e-003, 1.086414e-001, 1.139672e-003, 2.186691e-002, 1.629276e-002, 2.647291e-002, 2.567000e-003, -9.987858e-004, -1.542218e-002, 5.241920e-003, 1.233437e-002, -2.745496e-002, 5.998849e-002, 2.561182e-002, 2.561182e-002, 5.998849e-002, -1.272733e-002, -9.979974e-003, -1.075025e-002, -1.618239e-003, -2.164079e-002, 6.529785e-003, 1.157301e-002, 2.922906e-003, 1.161272e-002, 2.661582e-002, -2.639253e-002, 6.926359e-002, 3.134739e-002, 3.134739e-002, 6.926359e-002, 6.887235e-003, -2.599812e-002, -6.805754e-004, -6.525789e-003, -1.362666e-002, 6.099109e-003, 1.394722e-002, -6.360823e-004, 3.064476e-003, 9.429479e-003, -2.261469e-002, 5.505655e-002, -1.021623e-002, -1.021623e-002, 5.505655e-002, -1.226579e-002, -5.317922e-002, 3.956842e-003, 1.361197e-002, -2.917735e-002, 1.151701e-002, 9.129383e-003, 8.839838e-003, -5.623597e-003, -1.590228e-002},


© ISO/IEC 2004 — All rights reserved

--`,,```,,,,````-`-`,,`,,`,`,,`---

Copyright International Organization for Standardization
Provided by IHS under license with ISO
No reproduction or networking permitted without license from IHS
Not for Resale

{3.341093e-003, -1.234926e-004, -7.979624e-003, 9.701710e-003, -9.952143e-003, 1.603474e-003, -9.389391e-003, -1.209379e-002, 3.962188e-002, -1.964879e-002, -1.289278e-003, 9.223571e-002, -1.289278e-003, -1.964879e-002, 3.962188e-002, -1.209379e-002, -9.389391e-003, 1.603474e-003, -9.952143e-003, 9.701710e-003, -7.979624e-003, -1.234926e-004, 1.430080e-002, -8.692382e-003, -5.777411e-003, 2.070790e-002, -2.173806e-002, -1.118295e-002, -2.159734e-002, 1.197580e-002, -2.439736e-002, 2.126913e-002, -1.524516e-002, 8.065088e-003, 1.271874e-002, -1.266535e-002, -1.332156e-002, -1.568139e-003, -7.408751e-003, -8.987779e-003, -2.031610e-002, -3.416012e-003, -4.330147e-003, -2.912567e-003, -1.905730e-002, -1.846902e-002, -5.450455e-003, 1.140139e-002, -8.157573e-003, 2.782435e-002, -3.298502e-002, -8.016111e-003, -3.588274e-002, -1.544175e-002, 2.131842e-002, -4.201772e-002, 3.106948e-002, -6.127903e-002, 6.240263e-002, -3.671865e-002, 6.822733e-003, 1.287142e-002, 2.284237e-003, -1.563939e-002, -2.348981e-002, -6.466028e-004, 9.461682e-003, 6.139256e-002, 4.556326e-002, 2.860738e-002, -3.197147e-002, 3.163141e-002, 1.505238e-002, -9.753055e-003, -7.235410e-003, -7.706039e-003, 2.090494e-002, 2.082188e-002, 3.206280e-003, 1.127379e-002, 1.075425e-002, -4.083779e-003, 6.448315e-003, 1.928597e-002, -1.139877e-003, 2.269004e-002, 9.998445e-003, 4.053626e-004, -1.968893e-002, 2.817092e-002, -3.262271e-002, -2.755440e-002, 4.363616e-003, 4.069619e-003, 3.993644e-002, 1.301711e-002, -2.259097e-002, -4.167037e-002, -5.108246e-003, -4.226208e-003, -2.454611e-002, -1.912776e-002, -3.204743e-002, 1.261231e-002, -3.532681e-002, 6.653235e-003, -2.470155e-003, 1.743609e-002, 1.649036e-002, -1.303278e-002, -1.591006e-002, -2.199188e-003, -2.847500e-002, 3.029930e-002, -2.294038e-002, -2.607262e-002, -3.834190e-002, -1.583723e-004, -4.246098e-002, -1.756590e-002, -3.749085e-002, -4.006123e-003, -3.451088e-003, 8.461847e-002, 5.528993e-002, 9.188198e-002, 6.719312e-003, -3.549422e-002, -1.806408e-002, 1.651772e-002, -6.273206e-003, 3.894626e-002, 5.974170e-002, -3.032754e-002, 1.372022e-002, 4.465014e-002, -5.404928e-002, -3.347823e-002, 1.493644e-002, 5.123593e-003, -5.880822e-003, -5.378523e-003, 2.292112e-002, 1.983760e-002, 1.806460e-002, 4.717481e-002, -4.138079e-003, -1.116652e-002, 3.741108e-003, -1.762880e-002, 7.005149e-004, 2.954726e-002, 2.682171e-002, 3.477235e-002, -1.804319e-002, -3.450249e-002, 4.364016e-002, -2.556787e-002, -2.536699e-002, -3.084644e-002, -9.461291e-002, -4.200055e-002, -5.840465e-003, 1.247655e-002, 7.369149e-003, 7.885009e-003, 3.182073e-002, 1.926379e-002, 5.840810e-004, -1.358087e-002, -1.059760e-001, -6.912641e-002, 1.308015e-002, 6.994950e-003, 2.720594e-002, 4.209002e-002, 2.374767e-002, -2.095529e-002, 7.086198e-002, 3.466609e-002, 2.135837e-002, 7.328349e-003, -2.809177e-002, 3.121233e-003, 2.622473e-002, 4.359083e-002, 1.705894e-002, 2.886795e-002, 8.837565e-003, 1.765871e-002, -2.272540e-002, -3.309257e-003, 7.081329e-003, -1.033875e-002, -1.627161e-003, -2.593865e-003, 2.915131e-003, 2.550913e-002, 6.394743e-002, -3.413579e-003, -1.900017e-002, 8.071896e-002, -6.497963e-002, 2.587947e-003, 3.195537e-002, 1.549918e-002, -7.952691e-003, 2.055159e-003, -1.257250e-002, -1.398889e-002, -1.835722e-002, -9.560616e-003, -1.562727e-002, -3.936763e-002, 2.501263e-003, 1.342345e-002, -4.439195e-003, 5.471449e-002, 2.634446e-002, -7.934579e-003, 1.590932e-002, -4.234872e-002, -2.683737e-003, 6.280528e-002, -4.791063e-002, -3.082688e-002, -2.997317e-002, -8.638157e-003, 3.994152e-003, 2.367325e-002, 6.476859e-003, 5.765465e-003, -1.792549e-002, -2.824518e-002, -2.120130e-002, -4.879410e-002, 1.659651e-002, 1.637540e-003, 3.442888e-002, -1.289775e-002, -1.825763e-002, -1.018994e-003, 3.130582e-002, -3.135748e-002, -2.201353e-002, -5.956299e-003, -1.490933e-002, 1.800896e-002, -7.893562e-003, -1.937994e-002, -1.377236e-002, 1.958684e-003, -7.791865e-003, -6.464172e-003, -2.397070e-002, -7.388850e-003, 3.135041e-004, -1.036859e-002, -1.612469e-002, 1.802164e-002, -1.812647e-002, -2.048331e-002, -5.536481e-002, 2.192151e-002, -3.270365e-002, 4.087987e-003, 1.976346e-002, 5.595426e-002, -3.591592e-002, 4.983676e-003, 3.169310e-003, -6.612086e-003, 2.664781e-003, 4.351489e-003, -7.341671e-003, -8.481790e-003, -2.489413e-002, -5.099749e-003, -1.597573e-003, -1.481472e-002, -2.869042e-003, 1.449126e-002, -6.879383e-003, 6.019541e-003, -9.395212e-002, -1.922449e-003, -5.670712e-002, 1.629704e-002, 1.002865e-003, -9.765964e-003, 8.352745e-003, -2.126165e-003, 1.954006e-003, -9.233862e-003, 1.512592e-002, 1.228689e-002, 3.994648e-003, -9.054576e-003, -4.196270e-003, 7.552652e-003, 1.720351e-002, 3.800583e-003, 8.607819e-003, -3.662227e-003, 2.415384e-002, 1.355826e-002, -4.393166e-002, 1.520201e-002, 3.518082e-003, -2.247279e-002, 7.173890e-002, 1.708129e-002, -1.077071e-002, -1.424236e-002, -1.424236e-002, -1.077071e-002, 1.708129e-002, 7.173890e-002, -2.247279e-002, 1.659049e-002, -5.632915e-002, -1.806423e-002, 7.958347e-002, -5.696018e-002, -4.368490e-002, 1.020862e-002, 7.771056e-002, 3.828566e-002, -3.890516e-003, 4.219939e-002, 4.347127e-002, 4.308658e-002, -1.152248e-001, 4.824240e-003, -3.351379e-003, -4.701325e-003, -1.831666e-002, -1.753208e-002, -4.259765e-002, -1.713956e-002, 8.545434e-003, -1.653984e-001, -1.343044e-002, -2.622865e-002, -1.812321e-002, -1.715898e-002, -5.655572e-003, -1.016061e-002, -1.455672e-002, -9.978452e-003, 1.256215e-002, -3.806811e-002, -6.589798e-003, 8.544633e-002, 1.834506e-002, -2.500016e-002, -5.383266e-003, 5.085669e-003, -1.728195e-003, -1.046213e-002, -9.540472e-003, -2.017951e-003, 9.561039e-002, 8.645919e-002, 5.112412e-002, -2.950147e-002, -1.610881e-002, -7.899262e-003, -2.914444e-003, -1.070196e-004, -4.525289e-003, -2.698393e-003, 3.353935e-003, 3.633991e-002, -2.445727e-002, 1.092260e-002, 8.084867e-003, -7.346642e-003, -9.051197e-004, -8.327783e-003, 1.000745e-003, -2.375590e-003, -1.270715e-003, 7.979358e-003, -

© ISO/IEC 2004 — All rights reserved


Copyright International Organization for Standardization
Provided by IHS under license with ISO
No reproduction or networking permitted without license from IHS
Not for Resale

2.496920e-002, -4.372034e-004, 8.934696e-003, 8.230454e-003, 2.838770e-002, -2.746646e-002, 1.926696e-002, 1.926696e-002, -2.746646e-002, 2.838770e-002, 8.230454e-003, 8.934696e-003, 4.715897e-002, 3.544951e-002, 1.931838e-001, -3.137548e-002, -2.998071e-002, -4.471699e-002, -1.095233e-001, -1.143647e-001, -4.981100e-003, -7.791019e-003, 5.091743e-002, -1.791755e-001, -1.904082e-002, -8.526053e-003, -2.427640e-002, -2.057611e-002, -2.043484e-002, 1.337215e-002, 6.772686e-002, 9.197287e-002, 7.575740e-003, -7.029239e-002, 8.823592e-002, -1.370531e-002, -1.146042e-002, 1.282681e-002, -1.055322e-002, -8.173393e-003, 7.508478e-003, -1.025105e-002, -6.694931e-002, -7.925019e-002, 9.455707e-003, -7.585452e-002, 4.329456e-002, 2.189494e-002, 1.314800e-002, -3.963711e-003, -3.288501e-003, 8.341359e-003, -2.075213e-002, -6.162497e-002, -5.225920e-002, -4.206900e-003, 7.662927e-002, 4.599577e-002, 6.958489e-003, 6.419538e-003, -5.695769e-003, 2.971853e-003, -8.431389e-003, -2.370661e-002, -3.054740e-002, 3.139818e-004, 2.303967e-002, 4.274015e-002, 6.429096e-003, 5.690804e-003, 4.238325e-003, -3.157492e-003, -1.063432e-003, -2.194348e-002, -6.722730e-003, -7.331821e-003, -2.963417e-005, -8.192427e-003, -7.866030e-003, 5.958053e-003, 6.058268e-004, -1.274447e-002, 1.000394e-002, 8.110306e-003, 8.110306e-003, 1.000394e-002, -1.274447e-002, 6.058268e-004, 5.958053e-003, -1.409605e-002, -4.819432e-002, 3.925303e-002, 5.064068e-002, 2.244113e-002, -3.997159e-003, -2.434832e-002, -9.829675e-002, -9.630975e-002, 1.192897e-001, 1.202349e-002, 3.882790e-002, -4.163751e-002, 4.274088e-002, 7.146958e-002, 4.144300e-002, 5.646712e-003, -2.985781e-002, 1.448723e-003, -5.971791e-003, -9.228704e-002, 3.444759e-002, -1.683484e-003, -9.980294e-002, 7.344926e-003, 1.761197e-002, 2.529518e-002, 5.451609e-003, 1.141557e-002, 2.474993e-002, 4.331173e-002, 8.651793e-002, -7.815620e-002, 1.808315e-003, 5.346384e-002, -6.949265e-003, 3.054771e-003, 1.168040e-002, 1.440383e-002, 1.285955e-002, 1.258779e-002, 1.373233e-002, 7.421986e-003, -5.081606e-002, 9.053087e-002, -3.879696e-002, -5.188746e-003, 2.883831e-003, 4.362609e-003, 1.222244e-002, -1.201679e-002, -2.024253e-003, 7.487805e-004, -3.685025e-003, -3.329258e-003, 4.684479e-003, -2.270661e-003, -1.294636e-002, 1.334859e-003, 1.712659e-003, 4.240125e-003, -3.023175e-003, -4.458302e-003, -6.687281e-003, -8.185609e-003, -3.312021e-002, 8.126245e-003, 3.714850e-003, -4.298895e-003, -1.164577e-002, -2.944946e-002, 1.681925e-003, 1.681925e-003, -2.944946e-002, -1.164577e-002, -4.298895e-003, 3.714850e-003, 5.160227e-002, 9.143795e-002, -4.927613e-002, 5.470885e-002, -1.405232e-002, 2.012185e-002, 3.618527e-002, 1.781102e-002, -2.896206e-003, 9.194441e-002, -1.449891e-001, -1.630845e-002, -7.145775e-002, -9.226392e-002, -8.898412e-002, -1.393935e-002, 5.928170e-003, 2.961971e-002, 1.789469e-002, 4.544979e-002, 1.091227e-001, -7.327412e-002, -5.268726e-002, -9.207297e-002, 6.501440e-002, 2.822733e-002, 1.509922e-002, 3.057688e-004, 3.076161e-003, 2.556049e-002, 2.452379e-002, 3.366215e-002, -1.404008e-001, -3.716271e-002, -9.663611e-002, 2.204498e-002, -1.614739e-002, 1.198074e-002, 5.756625e-003, 1.292941e-002, 1.578071e-002, 2.222532e-002, 4.231686e-002, 5.196713e-002, 5.281309e-002, -3.626264e-002, -8.685593e-003, -4.232811e-003, -3.656891e-003, -9.470813e-004, 5.650929e-003, 2.680053e-004, 1.013784e-002, 8.516510e-003, -6.630171e-002, -5.399754e-003, -2.977804e-002, -9.825902e-003, -3.894361e-004, 4.792521e-003, -5.089962e-004, 4.625648e-003, 6.438314e-003, 9.920079e-003, -3.162093e-003, -1.428281e-002, 1.404967e-002, -2.261401e-002, -9.125875e-003, -9.125875e-003, -2.261401e-002, 5.489863e-002, -3.447389e-002, -4.013758e-002, 4.403350e-003, 6.187023e-004, 1.716522e-002, -4.060732e-003, -1.533931e-002, -6.822697e-005, -5.837538e-003, 3.028060e-004, -4.648473e-002, -1.273771e-002, -1.273771e-002, -4.648473e-002, 4.453948e-002, -1.998753e-002, 4.457992e-003, -4.159497e-004, -1.525068e-002, -8.332140e-003, 7.262368e-004, -5.326598e-003, 5.427679e-004, 1.049313e-003, -1.242864e-002, 1.294318e-002, 9.676116e-003, 9.676116e-003, 1.294318e-002, 9.508078e-002, 5.369529e-003, -2.379945e-003, -2.526609e-003, -1.852128e-002, -3.416257e-002, 5.018695e-003, -3.013587e-004, -8.083899e-003, -2.364869e-002, 8.712179e-002, 4.635119e-003, -2.830359e-002, -2.830359e-002, 4.635119e-003, -1.545842e-003, -2.245696e-002, -1.106867e-002, -1.868351e-002, -9.275238e-003, 1.767911e-002, -1.069249e-002, -6.269481e-003, -3.442885e-002, -2.443731e-002, 3.478509e-002, -2.013706e-002, -8.700805e-003, -8.700805e-003, -2.013706e-002, -9.725121e-002, -1.568043e-002, 1.247997e-002, -2.536232e-002, -2.570733e-002, -3.787149e-002, -7.992023e-003, 1.273704e-003, -1.069683e-002, -5.768214e-003, -4.561948e-002, 3.608373e-002, -1.148577e-003, -1.148577e-003, 3.608373e-002, -1.891560e-002, -4.516344e-003, -9.090715e-003, 1.014551e-003, -3.430381e-002, 8.371408e-002, 1.061325e-002, -4.254005e-005, -5.527198e-003, 2.630749e-002, 1.288263e-002, 6.891089e-003, -2.303193e-002, -2.303193e-002, 6.891089e-003, -1.862981e-002, -1.021244e-002, -7.696104e-003, -2.950107e-003, -2.504955e-002, 4.990694e-002, 4.077430e-002, -1.780795e-003, -1.257717e-003, -8.010943e-003, -8.801298e-002, -5.390950e-002, -6.417340e-003, -6.417340e-003, -5.390950e-002, -8.973175e-003, 3.106137e-003, 9.346370e-003, 3.864254e-002, 5.104361e-002, -3.580358e-003, 7.829827e-003, 3.045919e-003, 6.085882e-003, 4.182327e-004, -6.129177e-002, 2.773205e-003, 3.980145e-002, 3.980145e-002, 2.773205e-003, 4.148333e-002, 3.205305e-002, 1.420519e-002, -6.062971e-004, 9.343075e-003, 1.261201e-002, 6.178240e-003, 2.463113e-003, 5.013461e-003, 1.404791e-002, 5.173132e-002, -1.205868e-001, -3.780838e-002, -3.780838e-002, -1.205868e-001, 4.362774e-002, 4.941777e-003, -6.935965e-003, -1.806531e-003, -6.807394e-003, -6.718627e-003, 5.504740e-005, -1.758794e-003, -7.629469e-004, 6.844716e-003, -1.457500e-002, -9.296676e-002, -


© ISO/IEC 2004 — All rights reserved

Copyright International Organization for Standardization
Provided by IHS under license with ISO
No reproduction or networking permitted without license from IHS
Not for Resale

3.138808e-002, -3.138808e-002, -9.296676e-002, 4.184051e-002, -2.344305e-002, -2.398883e-003, -1.131190e-002, 1.061001e-003, -1.821422e-002, -3.648561e-003, 1.073582e-003, -4.413040e-003, 1.318674e-002, 2.125333e-003, 1.032678e-002, 6.987280e-003, 6.987280e-003, 1.032678e-002, 3.801411e-002, -3.106771e-002, -9.381677e-003, 2.254523e-002, 3.552975e-002, 1.189925e-002, 6.566388e-003, 3.465447e-003, 1.215595e-002, 7.143041e-003, 4.374184e-002, 2.773801e-002, -6.533252e-002, -6.533252e-002, 2.773801e-002, -3.255434e-002, 2.677411e-002, 2.543097e-002, -3.817957e-002, -2.793563e-002, 1.667733e-002, 9.224894e-003, 1.036823e-002, -1.214216e-003, 6.192530e-003, -4.204742e-002, 1.796437e-002, 1.651939e-002, 1.651939e-002, 1.796437e-002, -7.346784e-002, 1.166530e-002, 1.185609e-002, 6.102757e-003, 1.258403e-002, 1.686690e-003, 2.451984e-003, 2.251726e-003, -1.341289e-004, 1.333936e-002, 3.542833e-003, -2.191620e-002, -1.345402e-002, -1.345402e-002, -2.191620e-002, -6.138421e-002, -1.187497e-002, -2.132121e-003, -1.385556e-003, 5.839743e-003, -1.310984e-002, -5.737060e-003, -7.006562e-003, -5.483513e-003, -5.854278e-003, 1.703308e-002, -9.771288e-003, -8.200933e-003, -8.200933e-003, -9.771288e-003, -2.250738e-002, 4.856263e-003, -6.682594e-003, 1.768901e-002, 4.701325e-002, 7.728928e-003, 1.211301e-002, 3.545486e-003, 1.304402e-002, 3.490054e-002},
{-4.916612e-004, -4.342168e-003, -2.165650e-003, -8.917034e-003, 5.363882e-003, 2.617612e-003, -8.564501e-004, 3.425689e-003, -2.450023e-002, 3.700280e-002, 9.120570e-004, -2.140579e-003, 9.120570e-004, 3.700280e-002, -2.450023e-002, 3.425689e-003, -8.564501e-004, 2.617612e-003, 5.363882e-003, -8.917034e-003, -2.165650e-003, -4.342168e-003, 1.956880e-002, -9.410856e-003, -2.025161e-002, -1.285048e-004, 1.055663e-002, 2.460834e-002, -2.918461e-002, 1.573632e-002, 2.323189e-002, 1.054392e-002, 3.131512e-002, -1.630103e-002, -1.234190e-002, 2.227298e-002, -3.960063e-002, -2.600843e-002, 1.402275e-002, 4.178867e-002, 1.540954e-002, 4.744742e-005, -7.862714e-003, -1.669012e-002, -1.412904e-002, 1.728472e-002, 3.053126e-002, 1.007153e-002, 1.522397e-002, 4.252485e-002, -2.139323e-002, -1.743776e-002, 4.662045e-002, -8.251510e-002, 3.162381e-003, 1.613388e-002, -3.075820e-002, 1.497078e-002, -8.009804e-003, -2.596772e-002, 7.610837e-003, 3.907135e-002, -1.861626e-002, -2.395334e-002, 5.237033e-003, 2.414291e-002, -5.804868e-003, -1.519652e-002, -1.048459e-002, -1.139034e-002, -4.249206e-002, -1.004022e-002, -1.078959e-002, -9.061771e-003, 5.573210e-002, -1.173898e-002, -7.372646e-002, -5.873493e-002, -8.238436e-002, 1.338049e-002, -6.960504e-003, -1.071276e-003, 3.229709e-002, 2.732021e-002, -7.085816e-002, -5.145591e-002, 5.052725e-002, 2.134678e-002, -5.391509e-002, 4.760516e-002, -1.369443e-002, 3.025930e-002, 5.670981e-002, 5.589918e-002, 1.631460e-002, -3.751690e-002, 6.101294e-002, 7.652247e-003, -3.293428e-002, 5.847485e-002, 3.374122e-002, 1.144390e-002, -1.820511e-002, 2.808907e-002, 3.530427e-002, -3.918291e-002, -2.562136e-002, 2.777088e-002, 6.015345e-003, 2.832579e-002, 3.940117e-003, -2.990072e-002, -2.730525e-002, -4.490274e-002, -6.777565e-003, 1.643712e-002, 7.668917e-003, -6.617860e-002, 2.848033e-002, -3.945260e-002, 2.047856e-002, -8.278257e-003, -2.337052e-002, -6.787358e-004, -2.588444e-002, 3.760756e-002, 4.020051e-003, 1.019114e-002, -1.727208e-002, -2.884639e-002, 3.155649e-002, 1.680843e-002, 4.361465e-002, -9.754672e-003, -1.363055e-002, 3.931147e-002, -1.094530e-002, -5.939257e-002, 1.670148e-002, 2.204250e-003, -7.766254e-002, 6.053003e-002, 4.386676e-002, -1.794712e-003, 2.191002e-002, 1.153164e-002, 4.956351e-002, -3.145711e-002, -1.991764e-002, 8.777047e-004, 6.670232e-002, -3.736827e-002, 1.479121e-003, -2.092826e-002, -2.291277e-002, -3.347853e-002, -1.528462e-002, 8.409502e-003, 6.585171e-002, -1.915003e-002, -4.966585e-002, 7.683136e-003, 3.108463e-002, 3.512056e-002, -7.009744e-003, -1.541232e-002, -2.779212e-002, -3.605687e-002, -2.864298e-002, -3.380577e-002, -3.932199e-002, -5.141871e-002, 5.682126e-002, 3.057382e-002, 4.044465e-003, -1.391335e-002, 1.489125e-002, 1.733735e-002, -2.077952e-002, -1.372987e-002, -5.174369e-002, 1.115101e-003, 3.027437e-002, -9.042100e-002, -6.587642e-002, -2.016637e-002, 6.992275e-003, -1.228461e-002, -3.942126e-003, -4.564065e-002, -4.970698e-002, 9.509308e-003, 3.167547e-002, 8.967465e-002, 5.521243e-003, 5.475007e-002, 2.433218e-002, -1.454601e-002, -1.410888e-002, 2.762400e-002, 8.020785e-002, -1.875810e-002, -4.305601e-002, -6.422137e-003, 3.028577e-002, -1.463518e-002, -2.400999e-002, -1.380437e-003, -1.782880e-002, 1.995688e-003, 3.666755e-004, -3.081342e-002, 1.580760e-002, -7.521866e-003, 2.312836e-002, 2.211144e-002, 3.119087e-003, -1.136353e-002, -2.677616e-002, 3.147779e-003, 2.953883e-002, -5.955893e-003, 5.414363e-002, 3.910396e-002, 1.649132e-002, 3.940704e-002, 2.109007e-002, 1.334428e-002, -3.581372e-003, -2.348200e-002, -3.892159e-003, -2.441350e-002, -3.360155e-002, -2.824025e-002, -2.314986e-002, 7.731585e-003, -9.011043e-003, -3.430901e-002, -3.739775e-002, 4.796977e-002, 1.301947e-002, -5.287171e-003, 9.549492e-003, -1.355450e-002, -6.205733e-003, 3.813912e-002, 3.505850e-002, -3.948786e-002, -1.300441e-003, -2.319409e-002, 4.241895e-003, -7.514444e-003, -1.397559e-002, -1.608636e-002, -2.021755e-002, -2.127155e-002, 1.255246e-002, -1.943103e-002, 1.508007e-002, 1.071923e-002, 2.127270e-002, 5.060523e-002, 4.538331e-002, -5.867509e-002, -3.511763e-002, 4.292947e-002, -4.845741e-002, -4.059875e-002, 1.323779e-002, 7.193915e-003, 1.307051e-002, 3.801229e-003, 2.931613e-003, -1.265312e-002, 4.239751e-003, -3.025813e-003, -1.257431e-002, -8.877624e-003, 2.578043e-003, -1.310675e-002, 4.750124e-003, -9.290987e-003, -6.822190e-003, 3.285043e-002, 3.854932e-002, 4.561161e-002, -5.358229e-002, -5.411880e-002, -5.005665e-002, -8.031637e-002, -1.971605e-002, -1.897804e-002, -1.596482e-002, 2.510934e-003, 2.503580e-003, -3.854618e-003,

© ISO/IEC 2004 — All rights reserved


--`,,```,,,,````-`-`,,`,,`,`,,`---

Copyright International Organization for Standardization
Provided by IHS under license with ISO
No reproduction or networking permitted without license from IHS
Not for Resale

6.721703e-004, -1.283748e-002, 3.836686e-004, -1.390475e-002, -1.492678e-002, -2.025679e-003, -2.286404e-002, 2.112898e-002, 3.760643e-003, -1.296503e-001, -1.034035e-002, 8.394134e-002, 3.321256e-003, 2.052249e-002, 8.723695e-003, -1.707182e-002, 1.867368e-002, -3.155338e-002, -3.155338e-002, 1.867368e-002, -1.707182e-002, 8.723695e-003, 2.052249e-002, -6.104801e-003, 8.797100e-002, 2.855118e-002, -8.699746e-002, 5.094879e-002, -1.471763e-002, 1.792696e-002, 4.343650e-002, 5.748356e-002, 5.050897e-002, -1.004198e-001, 4.692036e-002, 1.375487e-002, 3.258787e-002, 8.230549e-002, 5.428710e-002, 1.897074e-002, 6.548068e-003, -1.484017e-002, 1.546940e-002, 2.130736e-002, -4.847007e-003, -4.483059e-002, -1.121451e-001, -2.333949e-002, -5.910060e-003, -1.958678e-002, -4.005408e-003, -9.984667e-003, -6.244915e-003, 1.229132e-002, 2.909385e-002, -7.985821e-002, 8.889200e-002, 1.974967e-002, 3.391809e-002, -1.071853e-002, -3.188870e-002, -4.243397e-003, -3.853462e-003, -9.250707e-003, -3.250607e-003, -2.007209e-002, 5.486797e-002, 5.448125e-002, 2.190045e-002, 1.909520e-003, 1.272156e-002, -1.532923e-003, -1.040754e-002, -7.191520e-003, -5.559234e-003, -1.355626e-003, 1.621885e-003, 1.017512e-002, -2.283383e-002, -5.011190e-003, 1.593382e-003, 1.000707e-003, -1.096667e-002, -5.025467e-003, -5.138109e-003, -6.213668e-003, -4.567820e-003, -4.914263e-003, -3.368042e-002, 4.898734e-004, -3.526010e-003, 2.311604e-002, 2.408673e-002, -3.887333e-003, -3.259992e-002, -3.259992e-002, -3.887333e-003, 2.408673e-002, 2.311604e-002, -3.526010e-003, 4.673174e-003, 4.990689e-002, 3.004638e-002, 2.580128e-002, 5.182856e-002, 3.139582e-002, 3.351584e-002, -3.429707e-002, 9.607605e-002, -6.257869e-002, 2.413110e-002, 1.198232e-003, -3.785193e-002, -2.590854e-002, -3.153271e-002, 6.781288e-003, -2.079297e-003, -2.760446e-002, -1.853783e-002, -1.440084e-001, 1.224683e-001, 3.583623e-002, 1.052178e-001, 4.988064e-002, -2.405941e-003, -3.190945e-003, -1.394072e-002, -9.938586e-003, -1.165988e-003, -4.626280e-003, -5.197540e-002, -6.179584e-002, 6.675897e-002, -2.068539e-002, 2.864305e-002, -3.611995e-002, -3.854846e-003, -7.513648e-003, -7.802206e-003, -3.158448e-002, -3.570849e-002, -5.990286e-003, 1.348115e-002, -5.661198e-002, 4.297364e-002, -5.629076e-003, -3.777833e-003, -8.985760e-004, -4.763596e-003, 2.723079e-004, -3.741423e-002, -3.111526e-002, -1.269346e-002, -1.553055e-002, 1.250179e-002, -1.606639e-002, -2.733668e-002, -3.849630e-003, 1.539982e-003, -4.012241e-003, -3.007304e-003, -1.555005e-002, -1.677263e-002, 1.101488e-002, -8.675001e-003, 1.114888e-002, -2.457674e-003, 8.644221e-003, 5.352473e-002, 9.495766e-003, -1.107312e-002, -3.546883e-002, -3.546883e-002, -1.107312e-002, 9.495766e-003, 5.352473e-002, 8.644221e-003, 2.395061e-002, 1.373688e-002, -2.221936e-003, -8.601693e-002, -2.353340e-002, -5.912668e-003, 3.540627e-002, 6.299743e-002, -3.245968e-002, -1.258456e-001, -3.441463e-002, 8.627393e-002, -3.583416e-002, 5.759530e-002, -1.479156e-002, -4.576497e-002, -1.028837e-002, -9.146544e-004, -1.299259e-002, 1.245343e-001, 1.044611e-001, -1.218284e-002, -7.138115e-002, -1.974092e-002, 3.062375e-002, 9.298515e-003, -1.990326e-002, -3.802850e-003, 1.901233e-002, 3.223128e-002, -4.256943e-003, 8.131893e-002, 5.686250e-003, -3.073117e-002, 3.778592e-002, 3.264810e-003, 2.028763e-004, -1.908360e-002, -1.011271e-002, 4.584201e-003, 1.644525e-003, -4.068831e-003, 3.455601e-002, 4.992984e-002, 3.344795e-002, 2.493982e-002, 1.367502e-002, 1.990334e-002, 4.726286e-003, 2.752420e-003, 1.234346e-002, 1.055373e-002, 1.750222e-002, 1.773317e-002, 2.601531e-002, 1.554219e-003, -2.444562e-002, 1.681256e-002, 1.721148e-002, 8.151051e-003, -2.665511e-003, 6.526816e-003, 3.278437e-003, 1.010346e-002, 2.351183e-002, 4.299248e-002, -1.845117e-003, 3.772511e-003, 2.066356e-002, 3.339174e-002, 3.352637e-003, -2.568408e-002, -2.568408e-002, 3.352637e-003, 3.339174e-002, 2.066356e-002, 3.772511e-003, -1.896220e-002, 5.878802e-003, -1.457169e-002, -2.904773e-002, -1.507114e-002, 1.793607e-003, -3.367270e-003, 4.581536e-003, -1.305915e-002, -1.005174e-001, 4.700259e-002, -7.666661e-002, -1.519969e-002, 5.104442e-002, 8.010555e-002, 1.360487e-002, -3.085836e-002, -1.365386e-002, -4.110848e-002, -3.439545e-002, -1.445644e-002, -2.587893e-002, 1.325300e-002, 1.244265e-001, -1.651078e-002, 2.614728e-002, 1.715305e-002, 2.429980e-002, -1.175193e-002, -2.947385e-003, 1.459832e-002, 6.556480e-002, -1.258487e-001, 7.281631e-002, 1.196960e-002, 4.309867e-003, -1.793073e-002, -6.206150e-003, 6.468927e-003, -1.161864e-003, -1.331325e-003, 3.882672e-002, 2.397254e-002, 6.250643e-002, 1.028279e-001, 3.848658e-002, 3.203350e-002, 2.676581e-002, -1.350460e-002, 4.408878e-005, 1.306888e-004, 1.091992e-002, 2.325710e-002, 6.263958e-003, 2.160677e-002, 5.011212e-002, 1.882582e-002, 3.673444e-003, 1.379689e-003, 6.046603e-003, 6.678673e-003, 3.035633e-003, 3.733998e-003, 4.044653e-003, -2.283377e-003, 3.665706e-002, 1.985699e-002, -7.156751e-004, -5.618091e-002, -5.618091e-002, -7.156751e-004, 4.123391e-003, 1.694920e-003, 1.716112e-002, 1.268040e-002, -2.642252e-003, 3.542240e-003, -2.196605e-003, -3.740709e-003, 4.286396e-003, 6.272684e-003, 3.776153e-002, -1.204878e-001, -5.000441e-002, -5.000441e-002, -1.204878e-001, -2.388865e-002, -3.406062e-002, -1.438322e-002, -5.821591e-003, -6.534320e-003, 1.391730e-002, -1.075737e-002, -4.697769e-003, -2.738885e-003, -2.786483e-003, 1.444510e-002, -1.093036e-002, 9.251839e-004, 9.251839e-004, -1.093036e-002, -7.030380e-002, -1.180814e-003, -8.384867e-004, 5.451507e-003, 5.033132e-003, -5.483626e-002, -6.636203e-003, -1.316446e-003, -5.775816e-003, -6.257162e-003, -2.840206e-003, 1.306918e-002, 1.866164e-002, 1.866164e-002, 1.306918e-002, -4.133858e-002, -1.978256e-002, -5.670979e-003, -3.276739e-002, -1.712112e-002, -6.127126e-005, -1.951947e-002, -5.721671e-003, -2.215450e-002, -1.462412e-002, -1.382300e-002, -9.580071e-002, 3.881966e-002, 3.881966e-002, -


© ISO/IEC 2004 — All rights reserved

Copyright International Organization for Standardization
Provided by IHS under license with ISO
No reproduction or networking permitted without license from IHS
Not for Resale

9.580071e-002, -2.157787e-001, -5.639937e-002, -1.042247e-003, -2.239526e-002, -1.314284e-002, -5.799465e-002, 1.879279e-003, -1.410505e-002, -6.661057e-003, -6.390987e-003, -4.047426e-002, 2.358230e-002, 1.919267e-003, 1.919267e-003, 2.358230e-002, -6.457088e-002, 2.536412e-003, 2.314502e-003, 2.535566e-003, -1.006395e-002, 2.311214e-002, 2.127170e-002, -2.365448e-003, -1.216463e-005, 1.818793e-002, -2.030967e-002, -3.461131e-002, 1.235023e-002, 1.235023e-002, -3.461131e-002, -5.016626e-002, -2.591435e-002, 2.385543e-003, 1.401469e-002, 2.938328e-004, 1.086747e-002, 7.910139e-003, 1.874137e-003, 2.804463e-003, 1.950355e-002, 9.194648e-003, -2.459817e-002, -3.805751e-002, -3.805751e-002, -2.459817e-002, -1.605533e-001, -3.033016e-002, -1.600769e-002, -2.548514e-002, -3.343276e-002, -3.588206e-002, -1.296378e-002, -2.833487e-003, -8.430109e-003, -8.501071e-003, -3.006893e-002, -2.804580e-002, 8.614659e-005, 8.614659e-005, -2.804580e-002, -4.166943e-002, -1.695424e-002, -4.117725e-003, -1.014099e-002, -2.736129e-002, -6.285995e-003, -1.561584e-003, -1.467857e-003, -1.451628e-004, 6.037428e-003, -3.037299e-002, 6.017007e-002, -1.246140e-002, -1.246140e-002, 6.017007e-002, -5.712583e-002, 1.629883e-002, -7.144231e-003, -1.537121e-003, 1.001025e-002, -7.750978e-003, -1.331761e-002, -5.934011e-003, 4.736355e-003, -2.182870e-003, 1.149071e-002, 6.519020e-002, 2.523346e-003, 2.523346e-003, 6.519020e-002, -1.025840e-001, 1.103091e-002, 1.163748e-002, -1.425976e-002, 2.614409e-003, 3.849170e-003, 3.877044e-003, 7.340569e-004, -1.474369e-003, -2.282212e-003, 1.767403e-002, -3.168480e-002, 2.406446e-003, 2.406446e-003, -3.168480e-002, -5.640947e-004, 2.122015e-002, -5.456809e-003, -5.377804e-003, 1.183620e-003, 2.587140e-003, 1.474296e-003, 4.035251e-003, 5.164113e-003, 8.381329e-003, 3.158222e-002, -4.599100e-002, -1.880311e-002, -1.880311e-002, -4.599100e-002, -1.473917e-002, 1.884795e-002, 1.193553e-002, 4.086060e-002, 6.507609e-002, -4.536476e-002, 9.766853e-003, -2.028522e-003, 2.163044e-002, 2.084330e-002, 2.640202e-002, -2.472483e-002, -4.439669e-003, -4.439669e-003, -2.472483e-002, 9.221262e-002, -6.934996e-003, -1.158605e-002, 1.758497e-003, -1.854396e-002, 1.954861e-002, -9.205560e-003, -6.342347e-003, -2.616231e-003, 5.290621e-003, -2.351209e-002, -7.446269e-003, 1.446392e-002, 1.446392e-002, -7.446269e-003, -3.312773e-002, 7.823478e-003, -3.350088e-003, -9.343692e-003, -5.722115e-004, 6.445048e-003, -7.297460e-003, -4.854984e-003, -2.509673e-003, -3.779479e-003, -7.497760e-003, -2.331613e-002, -3.548219e-002, -3.548219e-002, -2.331613e-002, 6.676024e-003, 4.657391e-002, 4.712616e-003, -7.730853e-003, 1.475895e-002, 5.944125e-002, 1.837300e-002, 3.823693e-003, 1.453139e-002, 4.269715e-002},
{1.160110e-004, -1.915037e-003, -1.217397e-002, 5.920318e-003, -1.734419e-002, 1.156010e-002, -9.351026e-004, 5.272997e-003, 6.709310e-003, -3.968523e-003, -1.222629e-002, 1.071706e-001, -1.222629e-002, -3.968523e-003, 6.709310e-003, 5.272997e-003, -9.351026e-004, 1.156010e-002, -1.734419e-002, 5.920318e-003, -1.217397e-002, -1.915037e-003, 4.641543e-003, 1.107182e-002, 8.186597e-003, -1.957648e-002, -2.737987e-002, 6.626235e-003, 2.234337e-002, -2.036329e-002, 3.215987e-002, -1.210003e-002, -3.216278e-002, -2.634225e-002, 1.544180e-002, 1.589467e-002, 4.638123e-002, 1.792461e-002, 4.563463e-002, -5.941133e-003, 9.058453e-003, 2.361377e-002, -1.793624e-002, -3.223683e-004, -9.139197e-003, -6.631493e-004, 4.849233e-002, 2.483092e-002, -1.445359e-002, -2.907999e-002, 9.644988e-003, 3.017631e-002, 1.689097e-002, 7.136930e-002, -2.419636e-002, -2.354479e-002, -5.734260e-002, -1.321490e-002, -5.415087e-002, 3.124709e-002, 1.564779e-002, -1.456574e-002, -7.125490e-003, 4.668993e-004, 3.008961e-002, -3.713049e-002, -4.219933e-003, -4.559441e-002, 1.143685e-002, -3.118407e-002, -2.804082e-002, -4.297412e-003, 5.273125e-002, 1.151559e-002, -6.894683e-003, 5.605243e-002, -7.203325e-002, -6.230991e-004, -1.972043e-002, -1.014089e-001, 9.198478e-003, -4.198458e-003, 7.021658e-002, 1.590261e-002, 1.242832e-002, -2.625379e-002, -7.157848e-003, 2.399488e-002, -6.457658e-002, -4.975084e-002, 3.830014e-002, 5.114706e-002, 1.998913e-002, 8.847456e-003, 9.606370e-002, -2.280351e-002, -5.140819e-002, -1.047084e-002, 2.060494e-003, -8.501345e-002, -1.035999e-001, -7.581561e-002, -3.105464e-002, -8.114566e-002, 2.580554e-002, 1.561969e-002, -4.199194e-002, 2.141986e-002, -8.471739e-003, -1.601842e-002, 2.559626e-002, 3.836794e-002, -2.177439e-002, 2.819718e-002, 1.824283e-002, -2.252396e-002, 3.125802e-002, -2.228691e-002, -7.063247e-002, -3.794234e-002, -6.111347e-002, 2.451020e-003, 2.455682e-002, -8.659099e-003, -9.520057e-002, -2.907508e-002, -4.016208e-002, -6.244552e-004, 2.645565e-002, 1.387215e-002, 4.165808e-002, 1.470282e-003, 1.429297e-002, -3.767670e-002, -1.450247e-003, -3.360243e-004, 5.733705e-004, -1.774633e-002, 1.625258e-002, -3.106130e-002, 4.137906e-002, 1.878504e-002, 2.423412e-002, -2.435181e-002, -2.331061e-002, -2.109132e-002, -2.413422e-002, -3.436900e-002, 5.503229e-002, -8.259925e-002, 2.554776e-002, 1.872957e-002, -3.674508e-002, 1.956717e-002, 1.240805e-002, 2.178816e-002, -4.175268e-002, 8.399326e-002, -1.380424e-002, 2.659999e-003, -5.667145e-002, 2.912762e-002, -1.174761e-002, 6.202243e-003, -7.697594e-003, -7.802752e-004, -3.292022e-002, -3.765551e-003, -4.961792e-003, 2.885697e-003, 3.326499e-004, -5.225781e-002, -4.526398e-002, -4.261255e-002, -2.764944e-002, 7.085989e-003, 8.306953e-002, -1.901741e-002, -3.144919e-003, 4.208741e-003, 1.769861e-002, -3.495790e-002, 2.406647e-003, -6.945543e-002, -1.181062e-002, -3.053638e-002, 5.348468e-004, -3.008483e-003, -7.033968e-003, 2.124234e-002, 2.319962e-002, 1.002274e-002, -1.441729e-002, -1.231330e-002, 2.231155e-002, 1.027661e-002, 2.088166e-002, -1.363082e-002, 4.649024e-004, 7.651330e-002, -7.005806e-003, 8.278711e-002, 2.360511e-003, -1.074753e-002, 3.059459e-002, 5.316846e-003, 2.179042e-002, 8.720706e-003, -

© ISO/IEC 2004 — All rights reserved


Copyright International Organization for Standardization
Provided by IHS under license with ISO
No reproduction or networking permitted without license from IHS
Not for Resale

8.721353e-003, 2.125319e-002, 1.874795e-002, 3.244356e-002, 3.973564e-002, 3.447852e-002, 5.634368e-002, -1.003110e-001, 6.208529e-002, 7.998411e-003, -4.539341e-002, 7.710829e-002, 8.359645e-003, -7.073069e-002, 2.689656e-002, 3.998833e-002, -5.253948e-003, -4.525179e-003, -1.977774e-002, 9.142734e-003, 1.389554e-002, 3.040707e-003, 5.107458e-003, 1.324900e-002, 1.671653e-002, 4.435304e-002, 5.181105e-002, 4.546967e-002, 3.223843e-002, -1.103094e-002, -6.112283e-002, -3.952993e-003, -2.999568e-002, -9.301629e-002, -4.404899e-003, 5.512302e-002, -5.255021e-002, 6.506738e-002, -1.985154e-002, -2.449288e-002, 3.403602e-002, 1.521263e-002, 1.933288e-002, 3.388000e-002, 2.388340e-002, 1.016368e-002, 3.108480e-002, 2.975315e-002, 4.209156e-002, 2.493407e-002, 2.158390e-002, -2.541380e-002, -4.459972e-002, -5.487048e-002, 1.676382e-003, 4.137680e-002, 2.432643e-002, -3.374897e-002, 4.405080e-002, -4.784506e-002, -8.222049e-002, -7.709843e-003, 2.131215e-002, 1.980960e-002, 6.393809e-003, 1.567131e-002, 1.838229e-002, 1.667871e-002, 2.714699e-002, 3.315324e-002, 1.364894e-002, 1.541154e-002, 1.169573e-002, -1.961091e-002, -4.511115e-002, -4.244255e-002, -1.224999e-002, 2.094277e-002, -5.899282e-002, 5.440546e-002, -3.338982e-003, 1.819598e-003, -1.706341e-002, -2.458870e-002, 5.189890e-003, -4.657975e-003, 2.600171e-003, 1.478795e-002, -2.141451e-003, 3.109819e-002, 1.794177e-002, 1.688084e-002, 2.569661e-002, 1.223306e-002, 1.387545e-002, 1.094233e-002, -2.502327e-002, -2.706263e-003, -4.681613e-002, 1.164203e-001, -4.085999e-003, -1.733689e-002, 3.887586e-002, 2.225440e-002, -3.150008e-003, 3.519341e-002, 3.519341e-002, -3.150008e-003, 2.225440e-002, 3.887586e-002, -1.733689e-002, 1.721527e-002, -7.715021e-004, 7.030225e-002, 4.817887e-003, 2.146091e-002, 3.091633e-003, 2.319021e-002, 2.974934e-003, -1.493710e-001, -2.290634e-002, 3.578509e-002, 2.542253e-002, 9.372922e-003, -5.806974e-002, 1.075218e-002, -1.648268e-002, 7.781563e-003, 1.281409e-003, -1.011501e-003, -1.975625e-003, 1.724851e-002, 3.484045e-002, -1.756469e-001, 2.307215e-002, -6.324786e-002, -8.230135e-003, 5.754896e-003, -2.282305e-002, 3.515769e-003, 9.978289e-004, 9.841364e-003, -1.581983e-002, -2.136739e-002, -8.569914e-003, -2.874692e-002, 4.119632e-002, -1.981370e-002, -4.007505e-002, -2.170486e-002, 1.280738e-003, -1.357694e-004, -2.509756e-003, -1.995140e-002, 3.217850e-002, -2.761094e-002, -7.896412e-003, 2.112634e-002, -4.932451e-003, -8.317400e-003, -5.176523e-004, -5.289563e-003, 2.117404e-003, 8.666059e-004, -2.603709e-003, -2.293121e-002, 3.059076e-002, 2.775171e-002, -2.782794e-002, 1.927940e-003, 8.340463e-004, 5.622290e-003, 1.454260e-003, 5.957394e-003, -9.165482e-003, -6.859483e-003, 1.328050e-002, 1.017908e-002, 4.688777e-002, -4.059044e-002, -2.552096e-002, -2.118416e-002, 4.348430e-003, 4.348430e-003, -2.118416e-002, -2.552096e-002, -4.059044e-002, 4.688777e-002, 1.387448e-002, -1.092883e-001, 1.102539e-001, -3.101826e-002, 1.978650e-003, -1.211202e-002, 5.443829e-002, 1.185340e-001, -6.324399e-002, -7.727432e-002, -4.152343e-002, 5.900788e-002, 8.908456e-002, 7.667037e-002, 2.433130e-002, 2.495597e-002, 1.440790e-002, -2.548220e-002, -4.779266e-002, -4.075346e-002, 3.639374e-002, -2.078179e-002, -6.114462e-002, 3.514288e-003, -4.993574e-002, 5.055671e-003, 1.136730e-002, 6.584370e-003, -6.594415e-003, -9.266433e-003, 2.795266e-002, -1.004887e-001, 1.042100e-002, -6.184348e-002, -3.933469e-002, 3.139640e-003, -1.088850e-002, -6.104251e-003, 6.406561e-003, -2.820108e-003, 2.098960e-002, 1.965590e-002, -6.836620e-003, -1.199456e-001, 1.218915e-003, -4.618479e-002, 1.611109e-002, 4.768348e-003, 3.638641e-004, -2.555438e-003, 1.651096e-002, 2.546568e-002, 3.291641e-002, -7.555483e-003, -4.322153e-002, 8.909816e-002, 2.096028e-002, -6.702290e-003, 8.996887e-003, 9.636139e-003, 6.468337e-004, 1.445660e-002, 1.984450e-002, 2.334045e-003, -2.801149e-002, 3.727438e-002, 4.315674e-003, 1.313066e-002, -1.779012e-003, -1.428094e-002, 3.695876e-002, 2.098653e-003, 2.098653e-003, 3.695876e-002, -1.428094e-002, -1.779012e-003, 1.313066e-002, 6.211752e-002, 4.422289e-003, 2.327328e-002, -4.896356e-002, -1.823776e-002, -1.250632e-002, -1.530781e-002, 1.616641e-003, 1.130632e-001, -8.731205e-002, 3.852863e-002, 1.826980e-002, 9.263614e-002, 3.096735e-002, -1.293034e-003, -4.611314e-002, 4.731654e-003, -1.709172e-002, 8.862315e-003, -3.468311e-002, -1.080385e-002, -1.069230e-001, -1.444053e-001, -7.011884e-002, 4.507256e-002, 8.142763e-003, -9.794002e-003, -8.145287e-003, 4.296409e-003, -5.269158e-003, 5.251826e-003, 9.738789e-002, -3.134726e-002, -7.451215e-002, -1.152206e-002, -8.873084e-004, 1.826642e-002, 1.191985e-002, 1.321173e-003, -2.481868e-003, 9.942672e-003, -1.306025e-002, 2.152631e-002, 1.549673e-002, -2.273703e-002, 2.236262e-002, 4.223764e-003, 1.029189e-002, 8.424468e-003, 9.948108e-003, 5.380942e-003, 9.308930e-003, 5.337563e-003, 8.092668e-003, -1.595260e-002, -5.968758e-002, -2.031422e-002, -3.480519e-004, 1.527138e-004, 7.901096e-003, 1.457466e-002, 8.197412e-003, 4.480975e-003, 2.509055e-003, -5.467271e-004, -9.981346e-003, -1.029274e-002, -1.234325e-002, 3.134189e-002, -1.553192e-002, -3.755950e-003, 3.837151e-002, 3.837151e-002, -3.755950e-003, -1.553192e-002, 3.134189e-002, -1.234325e-002, -6.450077e-002, -5.682511e-002, 1.697909e-002, 5.047830e-003, -2.119383e-002, -2.408073e-002, -6.237984e-002, -8.796683e-002, -4.913446e-002, 8.424322e-002, -6.043677e-002, 7.840355e-002, -2.348892e-002, -2.795536e-002, 7.731222e-002, -1.045002e-002, -2.786615e-003, -3.541043e-002, -3.563261e-002, -5.325064e-004, -2.884765e-003, 9.593374e-002, 7.745016e-003, 3.185117e-002, 7.389019e-002, 2.446473e-002, -5.677588e-003, 6.622120e-003, -1.153430e-002, -9.521338e-005, -7.139588e-003, -1.223497e-002, -5.837035e-002, -8.162773e-003, 2.251013e-002, -2.624708e-003, -8.242610e-003, 1.414820e-002, 4.475897e-003, -4.589211e-003, 3.236372e-003, 1.440659e-002,


© ISO/IEC 2004 — All rights reserved

Copyright International Organization for Standardization
Provided by IHS under license with ISO
No reproduction or networking permitted without license from IHS
Not for Resale

7.568892e-003, 2.090677e-002, -2.100484e-002, 1.879533e-002, 7.148028e-003, 1.656460e-002, 1.476919e-002, 3.888372e-003, 7.827080e-003, 2.831588e-002, 6.776643e-003, -8.271919e-003, 2.909332e-002, -2.233878e-002, 1.483279e-003, 1.039736e-003, 5.367619e-003, 4.866315e-003, 7.703259e-003, 1.204587e-002, 7.798929e-003, -7.249837e-003, -7.980411e-003, -3.454253e-003, 5.740522e-003, -2.384453e-002, 3.511211e-002, 3.511211e-002, -2.384453e-002, 8.436569e-002, 5.152876e-003, -2.232497e-002, 1.400597e-003, 6.919763e-003, 2.123577e-002, 9.933166e-003, -1.264999e-002, -1.662766e-003, -5.048236e-003, -2.341134e-002, 7.296719e-002, 1.233907e-002, 1.233907e-002, 7.296719e-002, 1.243195e-001, 2.126469e-002, 6.714123e-003, 4.696082e-003, 2.438987e-002, 2.882759e-002, 1.496682e-002, 6.214210e-003, -1.213226e-003, 6.911803e-003, 8.946902e-003, 4.335550e-002, 6.827929e-003, 6.827929e-003, 4.335550e-002, -5.797662e-002, 1.649345e-002, 8.322911e-003, 1.672062e-002, 2.813056e-002, -5.140027e-002, -1.974023e-003, -7.717423e-004, 7.960721e-003, 2.164943e-003, -1.119105e-002, 6.656331e-002, 8.406130e-002, 8.406130e-002, 6.656331e-002, 4.075128e-002, -2.693899e-002, -7.503938e-003, -2.759209e-002, -5.142389e-002, 2.391642e-002, -1.514381e-002, -3.493371e-003, 1.540813e-002, -3.997424e-002, 1.252663e-002, -3.444487e-002, 2.129776e-003, 2.129776e-003, -3.444487e-002, -8.775810e-002, -7.421627e-002, -5.779470e-003, -2.121241e-002, -4.952818e-002, -3.487936e-002, -7.230053e-003, -1.243221e-002, -1.605644e-003, -1.655511e-002, 1.058183e-003, 7.300317e-002, -1.440967e-003, -1.440967e-003, 7.300317e-002, 5.130784e-002, 7.836102e-003, 3.881623e-003, 4.460878e-003, 2.714421e-002, -1.618121e-002, 3.594601e-003, 2.058280e-003, 2.881576e-003, -5.452328e-003, 1.411615e-002, -1.490904e-002, -6.203932e-003, -6.203932e-003, -1.490904e-002, 1.483926e-003, 6.824482e-003, 1.248170e-003, 5.595146e-003, -1.598482e-002, -2.677659e-002, -1.557744e-002, 1.957705e-003, -5.611529e-003, -8.667004e-003, -1.692919e-003, 1.798903e-002, 4.268760e-002, 4.268760e-002, 1.798903e-002, 6.007968e-002, 2.094304e-002, 2.029252e-002, 1.629493e-002, 8.012763e-003, 1.476038e-002, 8.904116e-003, 6.269260e-003, 1.028407e-002, 1.068225e-002, -1.756600e-002, 4.469314e-004, 3.389538e-002, 3.389538e-002, 4.469314e-004, -3.005255e-002, -1.022304e-002, -1.042419e-002, 1.080358e-002, -4.269289e-003, -1.537288e-002, -2.516214e-003, -4.910733e-003, 1.879563e-003, 4.064896e-003, -7.127532e-002, -1.489985e-002, -8.387915e-003, -8.387915e-003, -1.489985e-002, -1.977448e-002, -8.928380e-003, 2.478812e-003, -4.602286e-003, 9.330998e-004, 1.635224e-003, 7.186756e-003, 1.348833e-002, 1.759981e-003, 7.653097e-003, 4.943428e-002, 3.200045e-002, -1.717119e-002, -1.717119e-002, 3.200045e-002, -3.426857e-002, -6.479049e-003, -1.772490e-003, -4.943584e-003, -8.248934e-003, 9.285693e-003, 1.430332e-002, 4.008072e-003, 7.174003e-004, 3.970885e-003, -9.683204e-003, 1.106114e-002, 1.803319e-002, 1.803319e-002, 1.106114e-002, 3.994379e-002, 5.500344e-002, 1.279334e-002, -8.475984e-003, 2.437266e-002, 9.916417e-003, 1.398639e-002, 9.598728e-003, -6.325256e-004, 4.033334e-003, 8.871109e-003, -1.969313e-003, -2.598500e-002, -2.598500e-002, -1.969313e-003, 1.637366e-002, 6.769413e-002, -6.643960e-004, -2.704451e-003, 1.827744e-002, -3.147702e-002, -1.369891e-002, 1.070474e-002, -1.898747e-003, 5.639994e-003, 8.428589e-002, -4.972462e-002, -2.769489e-002, -2.769489e-002, -4.972462e-002, 5.023412e-002, -2.295973e-002, -8.668403e-003, -5.740162e-003, -1.017536e-002, 4.582468e-003, -7.830707e-003, -4.302907e-003, 1.295101e-003, 1.431265e-002, -3.948468e-002, 1.094055e-002, 1.284286e-003, 1.284286e-003, 1.094055e-002, 8.095623e-002, -1.460004e-003, -2.861160e-003, -2.291568e-003, -3.642003e-003, 1.092631e-002, 5.330999e-003, -1.028251e-003, -3.857272e-003, 2.063182e-003, -1.055913e-002, -1.319328e-002, 1.062754e-003, 1.062754e-003, -1.319328e-002, 2.189514e-002, -4.020969e-002, -1.495761e-002, -2.585975e-002, 9.453615e-003, 8.675406e-003, 6.030616e-003, 6.447332e-003, 1.148463e-002, 1.203897e-003},
{2.236123e-004, -2.279979e-003, 1.203938e-002, 9.789911e-003, 1.083611e-003, 4.781573e-003, 6.783713e-003, -8.801578e-003, -7.239445e-005, -9.891040e-003, -1.563663e-002, -1.028472e-002, -1.563663e-002, -9.891040e-003, -7.239445e-005, -8.801578e-003, 6.783713e-003, 4.781573e-003, 1.083611e-003, 9.789911e-003, 1.203938e-002, -2.279979e-003, 1.095542e-002, 2.772399e-003, 3.495874e-003, -2.101405e-003, 3.700447e-002, -3.567643e-002, 1.031525e-002, 3.316785e-002, -3.961807e-002, 6.890318e-003, -2.189106e-002, -6.641143e-002, 8.175545e-003, 5.257231e-003, -6.912088e-002, -1.380095e-002, 1.226180e-002, 1.705430e-002, 5.912579e-002, 1.442235e-002, -1.403062e-002, -3.045497e-003, -8.172084e-003, -3.764460e-003, -8.925172e-003, 2.687157e-002, 3.466427e-004, 4.760112e-002, -9.605853e-003, -1.073816e-002, 1.269157e-002, 1.794160e-003, -1.596489e-003, -1.405008e-002, 4.428791e-003, 6.478586e-002, -3.066787e-002, 3.275154e-002, -4.892751e-002, -2.362637e-002, 1.747322e-002, 1.381853e-002, 1.725061e-003, -7.955415e-003, 1.380599e-002, 6.817939e-003, -9.806472e-004, -7.658873e-003, -2.394215e-002, -1.289684e-002, -2.724009e-002, -2.631046e-002, -2.577950e-002, -4.843518e-002, -1.718638e-002, -6.214173e-002, -1.429706e-003, -1.433369e-002, 5.613188e-002, -2.327238e-003, 3.646872e-002, 8.010880e-002, 5.840855e-002, -2.076362e-002, -1.697449e-002, 2.612394e-002, 3.736267e-002, -3.852575e-002, 1.814487e-003, 7.566360e-003, 4.634659e-002, 7.547067e-002, -4.977033e-002, -8.582253e-003, -8.660683e-002, -2.620097e-002, -5.405979e-002, -4.440064e-002, -9.371474e-004, -5.425205e-002, -3.120595e-002, 7.558731e-003, 3.005044e-002, 1.032814e-002, 5.287742e-003, -2.620141e-002, -2.785945e-002, -1.623143e-002, -1.836197e-003, 9.928705e-004, -1.146179e-002, 3.482606e-002, 2.082388e-003, -6.308050e-003, -5.225532e-002, -6.823313e-002, 1.915874e-002, 7.747027e-002,

© ISO/IEC 2004 — All rights reserved


Copyright International Organization for Standardization
Provided by IHS under license with ISO
No reproduction or networking permitted without license from IHS
Not for Resale

3.208829e-002, 1.239706e-002, -1.672487e-002, -7.387137e-002, -2.985387e-002, -6.965376e-002, -6.685846e-003, 2.205026e-002, 5.779471e-002, -1.926928e-002, -3.089530e-002, 1.185616e-002, 2.467420e-002, 3.188701e-002, -1.911473e-002, 3.150496e-002, 2.374391e-002, 1.432323e-002, -9.021304e-003, -5.270801e-002, -5.581564e-003, 7.942450e-003, -1.461572e-002, -1.542194e-002, -1.427174e-002, 2.796893e-002, -5.444859e-002, -6.717222e-002, -2.515434e-002, -3.573397e-002, -5.592823e-003, 4.328544e-003, 2.754765e-002, -1.646013e-002, -4.835253e-002, -5.045527e-002, 2.428995e-002, -6.151968e-002, -1.159858e-002, -3.685152e-002, 1.679348e-002, -3.956793e-002, 3.980646e-002, 8.404656e-003, 2.514106e-002, -1.532301e-002, -3.617772e-002, -3.483533e-002, 3.222619e-002, 5.027726e-002, -1.940488e-002, 4.164593e-003, 5.931016e-002, -6.978163e-002, -3.109884e-002, -3.998889e-002, -1.969415e-002, -1.886396e-003, -2.244580e-002, -4.019916e-002, -2.098591e-002, 3.519830e-002, -4.407941e-002, -1.902577e-002, -1.297319e-002, -2.847824e-002, -1.996386e-002, -3.411932e-002, -3.517140e-003, -6.473801e-002, -3.250302e-002, 4.949497e-002, -1.202058e-002, -7.766571e-003, -5.317945e-002, -5.763319e-002, -4.198294e-002, 1.790678e-004, -5.127918e-002, 1.395737e-002, -3.939287e-002, -2.564990e-003, -2.284618e-003, 5.085610e-003, -3.209044e-002, -1.477699e-002, -4.800106e-002, -2.978093e-002, -1.590568e-002, -2.126321e-002, -7.350933e-003, 1.621561e-002, -1.733935e-002, -1.996707e-002, 1.566032e-003, 3.853119e-002, -5.850142e-004, -2.524211e-002, 1.872218e-002, 1.125355e-002, 3.105336e-002, -2.601688e-002, 1.218703e-001, -8.089054e-003, 3.081151e-002, -1.839502e-002, 3.282004e-002, -1.009634e-002, 6.034543e-003, -4.926660e-003, -4.049561e-002, -6.605936e-003, -5.506639e-003, 1.187689e-002, 2.371287e-003, 2.305324e-002, 6.630699e-003, 3.359990e-002, 5.720187e-002, -4.338764e-002, 1.165688e-001, 6.508274e-002, -7.869060e-002, 6.490408e-002, 4.420787e-002, 1.377153e-002, 9.543415e-002, 1.032050e-001, 4.093359e-002, 2.822513e-002, 1.294644e-002, -2.882549e-002, -2.632173e-002, 9.408958e-003, -5.571097e-004, -3.428730e-003, 6.068778e-004, 1.855334e-002, 2.319448e-002, 6.989758e-002, 5.578816e-002, 9.641373e-002, 6.611786e-002, 2.823229e-002, 6.115643e-002, -1.786431e-002, 8.576850e-002, 2.083962e-002, 6.916538e-002, 4.887733e-002, 2.522480e-002, 1.508539e-002, 1.324476e-003, -6.230914e-003, -1.643068e-002, -3.607370e-003, -1.090491e-002, -4.842772e-004, -6.867893e-003, 6.187792e-003, 1.312107e-002, 7.195759e-002, 5.705503e-002, -3.217916e-002, 1.352939e-001, -4.371859e-002, 5.755332e-002, -3.993663e-002, 1.861615e-002, -3.522235e-002, 3.610926e-002, 4.665727e-002, 5.936777e-002, 2.486638e-002, 1.472308e-002, -3.497453e-003, 1.547429e-004, -1.102976e-002, -1.216260e-003, -1.079178e-002, -1.197410e-002, 3.211531e-003, 5.333708e-003, 4.557856e-002, 1.649557e-002, 1.537076e-002, 1.759058e-002, 1.582543e-002, 1.871081e-003, -1.820201e-002, -1.120368e-002, -3.187469e-002, 1.202518e-002, 4.137379e-002, 4.137379e-002, 1.202518e-002, -3.187469e-002, -1.120368e-002, -1.820201e-002, -1.321871e-002, -1.392084e-002, -1.697736e-002, 2.737253e-002, 3.738869e-002, 8.965897e-003, 2.742174e-002, 5.705227e-003, 6.434493e-003, 3.838197e-004, -3.071923e-002, 1.446575e-002, -4.267017e-002, -3.010827e-002, -3.302052e-002, -1.521547e-002, -1.532746e-002, 1.474507e-002, 4.435039e-003, -1.667486e-002, -5.136089e-002, 8.801252e-003, -3.959617e-002, -1.494693e-001, 4.768923e-002, 5.361002e-002, 1.244889e-002, 1.941180e-002, 7.558660e-003, 3.327883e-003, -1.834110e-002, -2.319816e-002, -5.695379e-002, 9.979755e-002, -3.524297e-003, 3.917377e-003, 2.798134e-002, -3.971104e-003, 3.148627e-003, 1.263664e-003, 3.012246e-003, -5.718343e-003, -2.873895e-003, -5.704328e-002, -7.118263e-002, -1.421593e-002, -1.338292e-002, 3.263340e-003, -5.764350e-003, -1.275582e-002, 3.047255e-003, 7.501478e-003, 5.954423e-003, 2.281925e-004, -6.046577e-002, -4.994251e-002, -4.123932e-002, 3.419033e-002, 3.455016e-003, -1.726177e-003, -4.914116e-003, 2.959219e-003, -2.819414e-004, 6.212013e-003, 7.086277e-003, -2.319263e-002, -1.283616e-002, 2.309470e-002, -7.870570e-005, 1.561687e-002, -2.696763e-002, 1.005044e-002, 1.005044e-002, -2.696763e-002, 1.561687e-002, -7.870570e-005, 2.309470e-002, 1.769700e-003, -5.600213e-002, -1.525102e-002, 2.994631e-002, 1.715222e-002, 1.466335e-002, 8.287632e-004, 9.268407e-002, 3.864342e-002, -4.656960e-002, 2.067631e-002, 2.956142e-002, 5.132430e-002, -3.886904e-002, -3.462852e-002, 1.713097e-002, 3.520829e-002, -8.584097e-003, 3.040584e-002, 6.701992e-002, 6.467960e-003, 3.060183e-002, 2.134922e-002, -1.503364e-002, 8.049552e-003, -4.771851e-003, 1.073974e-002, 1.051452e-002, -1.359221e-002, -1.117643e-004, 5.372651e-002, -3.830046e-002, 1.239737e-001, 9.239360e-002, -4.420870e-002, -1.089290e-002, -6.707989e-003, 7.957594e-003, 4.429217e-003, -1.120341e-002, -1.991620e-002, 2.200044e-002, 3.717095e-002, 6.799403e-002, -1.045344e-001, -4.240640e-002, -3.390767e-003, 1.328044e-003, 2.902240e-003, 2.794491e-003, -1.076276e-002, -9.179856e-004, 5.179661e-003, 2.814283e-002, 5.127840e-003, -5.850899e-002, -1.141914e-002, 1.403822e-002, 8.311191e-005, -2.451471e-003, 4.174646e-004, -1.938251e-003, -1.113731e-003, 1.479226e-002, 3.686364e-002, -1.086144e-002, 2.074210e-003, 7.670722e-003, -1.933071e-003, -1.698838e-002, 2.133955e-002, 1.461930e-002, 1.461930e-002, 2.133955e-002, -1.698838e-002, -1.933071e-003, 7.670722e-003, -5.990562e-002, 5.405433e-002, -2.001595e-002, 5.422457e-002, 1.823667e-002, -1.761271e-002, -8.324219e-003, -3.729742e-002, -5.462192e-002, -1.807306e-002, 3.408647e-002, -4.124319e-002, -2.479596e-002, 4.517384e-002, 2.362624e-002, 1.836469e-002, 1.560365e-002, -9.174679e-003, 1.875813e-002, -4.897724e-002, 7.769378e-002, -6.938537e-002, -1.673462e-002, -3.218656e-002, 3.001328e-002, 4.105128e-003, -3.854652e-003, 1.681066e-002, -4.011112e-002, -3.752369e-002, -4.294753e-002, -


© ISO/IEC 2004 — All rights reserved

Copyright International Organization for Standardization
Provided by IHS under license with ISO
No reproduction or networking permitted without license from IHS
Not for Resale

1.034892e-002, -1.550636e-001, 5.462143e-002, 3.047430e-002, 1.836060e-002, -3.552410e-003, -1.769410e-002, -6.471472e-005, -1.331118e-002, -1.112708e-002, -1.735776e-004, -1.023550e-002, -8.495692e-002, 2.100533e-002, 3.626258e-003, 3.176794e-002, 2.692108e-002, -6.749547e-003, -1.110569e-002, -1.700714e-003, -6.047584e-003, 2.075055e-003, -3.224967e-003, 2.000476e-002, 5.155042e-002, 2.208649e-002, 3.834280e-002, 2.304791e-002, 8.926624e-003, -6.910943e-003, -1.991029e-003, -1.796013e-003, -5.860180e-003, 9.201671e-003, 8.880853e-003, 9.114482e-003, -1.014231e-002, -2.020434e-002, -1.334596e-002, 2.732231e-003, -2.027453e-002, -2.027453e-002, 2.732231e-003, -1.334596e-002, -2.020434e-002, -1.014231e-002, 1.348028e-002, 4.805428e-002, -9.501679e-002, 5.913255e-002, 1.249573e-002, -2.712348e-002, 8.980243e-003, 2.299262e-002, 3.643234e-002, -6.167659e-002, -2.804386e-002, -1.154665e-002, 2.621229e-002, -2.522085e-003, -4.628716e-002, 1.997813e-004, 9.058272e-003, 2.611801e-002, 3.378287e-002, 4.997345e-002, 9.280982e-002, 1.034660e-001, 9.715626e-003, -8.449121e-002, -5.369927e-002, -9.882539e-003, -9.059088e-003, -1.438736e-002, 7.239297e-003, 1.653439e-002, 2.589043e-002, -3.073581e-002, -1.345158e-001, 7.678554e-002, -5.568899e-002, -2.320076e-003, 9.993408e-003, -1.609353e-002, -1.133529e-002, 2.365012e-003, 5.791403e-003, -1.800960e-002, -1.478841e-002, 3.319468e-002, 3.934050e-002, 5.263289e-004, -6.192836e-003, 6.859880e-003, 4.631176e-004, -8.261849e-003, 1.181852e-002, -1.655348e-003, 7.240783e-003, 2.903181e-002, 1.630736e-002, 5.710805e-002, -2.954944e-003, 4.940880e-003, 6.195541e-003, -4.543602e-003, -2.306483e-003, -4.710153e-003, -8.203307e-003, 7.875892e-003, 1.181383e-002, -5.359440e-003, -1.523057e-003, -3.184524e-002, -6.900537e-002, -6.900537e-002, -3.184524e-002, 3.976749e-002, 6.054964e-002, 6.649162e-002, 2.368580e-002, 6.236429e-002, 1.583523e-003, 2.737927e-002, 5.220183e-003, 6.921794e-003, 2.843532e-002, 7.791363e-003, 5.765617e-002, 2.628101e-002, 2.628101e-002, 5.765617e-002, -1.181118e-002, 3.160279e-002, 1.288100e-002, 4.175444e-003, 1.523471e-002, 2.061938e-002, 1.682856e-002, 5.176911e-004, 3.246020e-003, 6.047995e-003, 1.965504e-002, -4.999566e-002, -2.133380e-002, -2.133380e-002, -4.999566e-002, 1.940592e-002, -6.717640e-003, -3.261992e-003, -1.587104e-002, -5.222061e-002, 3.662964e-002, -3.092797e-003, 3.262216e-003, -8.174182e-003, -2.765753e-003, 2.841345e-002, -3.149739e-002, -4.682121e-002, -4.682121e-002, -3.149739e-002, -6.686832e-002, 5.554932e-002, 2.711313e-002, 8.344121e-002, 8.788748e-002, -3.641946e-002, 2.374356e-002, 9.075068e-003, 8.215073e-004, 3.253895e-002, -2.601997e-004, 6.482465e-004, 7.973935e-002, 7.973935e-002, 6.482465e-004, 2.812804e-002, -2.694991e-002, -4.514839e-002, 1.054104e-002, 1.030280e-002, 7.985855e-003, -1.314321e-002, -2.461950e-003, -4.061804e-003, -5.457999e-003, -4.137025e-003, -4.903044e-002, -1.571609e-002, -1.571609e-002, -4.903044e-002, -1.214239e-001, -2.078000e-002, 2.014226e-003, -1.374042e-002, 4.713592e-003, -3.043067e-002, -1.954002e-002, 1.263074e-003, 1.944331e-003, -2.655132e-002, -4.307914e-002, -2.716378e-002, -3.246372e-003, -3.246372e-003, -2.716378e-002, -4.649265e-002, 9.456935e-003, 5.041107e-004, -4.833177e-003, -4.619226e-003, -2.517321e-002, -2.196256e-002, -4.941586e-003, 3.581333e-003, -1.582976e-002, -1.782551e-002, -9.711458e-002, 4.551509e-002, 4.551509e-002, -9.711458e-002, 9.152272e-002, 4.412589e-002, 1.740125e-002, -4.878944e-004, -1.531483e-002, 3.875715e-002, 6.805219e-003, 4.158015e-003, -1.443571e-003, -3.464305e-003, 8.874683e-004, -1.703083e-002, -3.234964e-002, -3.234964e-002, -1.703083e-002, -2.640213e-002, -1.943579e-002, -2.188267e-002, -1.340267e-002, -2.631709e-002, 3.318773e-003, -5.189582e-003, -5.893547e-003, -4.138201e-003, 6.577527e-004, 1.839936e-002, -9.211036e-002, -2.874674e-002, -2.874674e-002, -9.211036e-002, 7.024956e-002, -2.851458e-003, 4.211105e-003, 3.780796e-003, -1.580389e-002, -2.835484e-002, -1.876820e-003, -6.587970e-003, -6.638481e-003, -1.906490e-002, 2.782342e-002, -1.317202e-002, 2.228547e-002, 2.228547e-002, -1.317202e-002, 9.611516e-002, -6.619815e-003, 4.951809e-003, 9.937483e-003, -6.850645e-004, -1.304587e-002, -1.436915e-002, -6.455473e-003, -3.301250e-003, 6.355158e-003, -3.832658e-002, 4.881824e-002, 3.380528e-002, 3.380528e-002, 4.881824e-002, 1.401750e-003, -1.721266e-003, -4.439566e-003, -1.054311e-002, -2.655718e-002, 7.302795e-003, -7.845009e-003, 4.286039e-003, -2.643889e-003, -3.577257e-003, -3.441927e-002, 1.313145e-002, 3.021264e-002, 3.021264e-002, 1.313145e-002, -1.926402e-002, 2.924699e-002, 2.181196e-002, 1.637675e-003, -7.616196e-003, 4.719831e-002, 4.843618e-002, -4.037592e-003, -9.638532e-003, -5.525759e-003, 1.720665e-002, -1.880576e-003, 2.163643e-002, 2.163643e-002, -1.880576e-003, 1.311605e-002, 2.971360e-002, 1.033502e-002, 1.293753e-002, 4.461861e-002, -5.375856e-003, -1.739139e-003, 2.598447e-003, -1.129561e-004, -4.934487e-003, 2.004389e-002, 2.139883e-002, 6.857913e-003, 6.857913e-003, 2.139883e-002, 5.497633e-003, 7.535547e-003, 5.321000e-004, 1.447988e-002, 2.578242e-002, 1.787900e-002, -4.897055e-003, 8.936756e-004, 3.166724e-003, -2.021881e-003, -4.262452e-004, 3.156722e-002, -4.051019e-002, -4.051019e-002, 3.156722e-002, -3.861312e-002, -4.673352e-002, -2.618161e-002, 7.188264e-003, -6.408324e-003, 4.409707e-002, -7.876513e-003, -7.802519e-003, 6.610527e-004, -1.115195e-004},
{-8.069334e-005, -2.968735e-003, -5.210685e-003, 1.484854e-002, 1.723052e-003, 2.211578e-003, -8.742661e-003, 1.563341e-002, -7.726619e-004, -8.545721e-003, -3.181821e-002, -4.657124e-002, -3.181821e-002, -8.545721e-003, -7.726619e-004, 1.563341e-002, -8.742661e-003, 2.211578e-003, 1.723052e-003, 1.484854e-002, -5.210685e-003, -2.968735e-003, 8.498169e-003, -1.713235e-003, 9.247379e-003, 2.041583e-002, 3.173307e-002, 8.001179e-003, -5.339189e-002, -2.831152e-002, 5.162102e-004, 4.463011e-002,



Copyright International Organization for Standardization
Provided by IHS under license with ISO
No reproduction or networking permitted without license from IHS Not for Resale

2.785642e-002, 5.263167e-002, -2.118166e-002, -5.074721e-002, 1.588723e-002, -9.600657e-003, 6.164341e-003, 3.390743e-002, -5.054453e-003, -4.453241e-002, 2.902111e-003, -3.217215e-002, -1.716634e-002, -1.250655e-002, -4.877922e-002, 5.140705e-003, -2.973426e-002, -3.157397e-002, -2.403519e-002, -5.544996e-002, -5.099850e-002, 1.124148e-002, 9.194168e-003, 1.580656e-002, 3.493816e-002, -7.793121e-003, -2.541633e-002, 1.375424e-002, -8.060978e-003, -1.142102e-002, 3.498097e-002, -3.207551e-002, -2.515601e-002, 1.686003e-002, -2.897306e-003, -2.170733e-002, 2.178969e-002, -1.932384e-002, -3.689081e-002, -3.372705e-002, -1.688291e-002, 2.709509e-003, 2.023319e-002, 2.615552e-002, 5.353262e-002, 4.955512e-002, 6.273308e-003, 4.311943e-003, -6.459904e-003, 3.297102e-002, -1.199770e-002, -1.042574e-003, 3.415032e-002, -1.129547e-001, -1.740509e-002, 5.329641e-004, -6.409318e-002, 3.054539e-003, 2.198524e-002, -2.476757e-003, -6.728441e-002, -6.357113e-002, 4.875193e-002, 5.071641e-002, -4.444101e-002, -2.875450e-002, 3.945052e-002, 3.864791e-002, 3.275838e-002, -1.596501e-002, 1.098371e-002, -4.904823e-002, -1.628045e-002, -7.802065e-003, -2.105225e-002, -2.672808e-002, 2.492880e-003, 4.532521e-002, 1.147180e-001, -4.306961e-002, 1.688213e-002, 1.140904e-002, -2.625381e-002, -1.260447e-002, 3.374460e-002, -7.422319e-002, -2.287482e-002, 2.046860e-003, 4.037789e-002, -3.403571e-002, -4.889827e-002, -7.256560e-004, 2.695498e-002, 1.257409e-002, 7.580251e-002, 3.684886e-003, 1.651049e-002, -2.262028e-002, 4.144463e-002, -3.770066e-002, 2.412088e-002, -7.367385e-003, 5.132082e-002, -8.626282e-003, -7.229076e-003, 2.320498e-002, 9.903899e-003, 2.641258e-002, 7.097600e-002, 4.081449e-002, 5.602330e-002, 1.675840e-002, 2.275971e-002, 1.319049e-002, 9.769627e-002, -7.373392e-002, 7.396306e-002, -2.000127e-002, 2.928560e-002, -1.967951e-003, 2.918097e-002, 1.225850e-002, 7.475773e-002, -1.781852e-002, -7.937719e-002, -2.057883e-002, 5.456798e-002, 3.872533e-003, 3.812908e-002, 2.097544e-002, 2.981560e-002, 9.916305e-004, -3.349284e-006, 3.827149e-002, 2.297796e-003, -3.816318e-002, 1.133367e-002, 4.462254e-002, -6.119235e-003, -8.252934e-002, 1.015358e-002, 1.365633e-002, -4.080111e-002, 1.899964e-004, -4.667953e-003, 3.510638e-002, 3.144249e-003, 2.152787e-002, 3.402235e-005, -6.066947e-002, -1.943592e-002, 6.882077e-003, 5.729055e-002, -1.372593e-002, 2.670695e-002, 8.701438e-003, 2.889728e-002, 3.575753e-002, -1.406392e-002, 3.452423e-003, -5.150677e-002, 7.318534e-002, 3.820151e-002, 4.416928e-002, 4.624112e-002, 1.363998e-002, -8.409005e-002, -2.145582e-002, 2.423859e-002, -2.257108e-002, 1.684735e-002, -6.672124e-002, -4.192719e-002, -3.434374e-002, 1.155152e-003, -1.219143e-002, 5.011985e-004, 1.036086e-002, 1.888830e-002, 5.838787e-002, 4.473784e-002, 1.544814e-003, -2.148866e-003, -4.041017e-002, -3.840266e-002, 3.894718e-002, -1.837039e-002, 3.507851e-002, -7.145643e-002, -1.089376e-002, 4.758321e-002, -3.581214e-002, 8.185047e-002, -8.823333e-002, -2.544296e-002, -5.051768e-002, -4.410908e-002, -1.563693e-002, -6.445980e-003, -1.723166e-002, -1.125519e-002, -2.644917e-002, -1.335586e-003, -4.063726e-002, -1.905719e-002, -1.891340e-002, 3.905125e-002, -8.225304e-002, -5.936289e-003, 7.483236e-003, 4.897536e-002, -1.497978e-002, 4.767113e-002, 5.720370e-002, -1.074486e-002, -2.773112e-002, -1.378231e-002, -2.341757e-003, -1.959901e-002, -4.963966e-003, 1.101018e-003, -6.531835e-003, -2.467962e-002, 9.272261e-003, -2.206995e-004, 1.979881e-002, -2.526762e-002, -4.340412e-002, -1.232947e-002, -1.220146e-002, -8.632689e-004, 6.393033e-002, -6.254501e-002, -6.294179e-002, 1.016272e-001, 3.765439e-002, -1.656255e-002, 5.249442e-003, 9.078398e-003, -3.204248e-003, -2.382020e-002, -2.759304e-003, -1.539752e-002, -1.755921e-003, -5.757303e-003, 1.091023e-002, -7.555622e-003, -2.517796e-003, 3.596803e-002, -1.363625e-003, -2.298269e-005, -7.299049e-002, -4.642442e-002, 8.513859e-002, 1.014154e-001, 9.953411e-003, -1.337707e-002, -1.476699e-002, 7.364240e-003, 1.720551e-002, 4.593635e-003, 5.333173e-003, 2.432174e-003, -7.942665e-003, -1.579483e-002, 6.490616e-003, -8.805977e-003, -1.872007e-003, -2.056398e-003, -1.050076e-002, 1.618501e-002, -3.432015e-003, -2.549987e-003, -4.551217e-002, 2.219822e-002, -6.182451e-002, 4.172601e-003, -8.652906e-003, 3.782441e-002, 4.040062e-003, -2.827060e-002, 1.216541e-002, 1.216541e-002, -2.827060e-002, 4.040062e-003, 3.782441e-002, -8.652906e-003, 4.463833e-002, -1.080226e-002, -6.097669e-002, 2.378663e-002, 5.170940e-002, 1.857263e-002, 3.778877e-002, 3.767603e-002, -1.192200e-002, 6.215143e-002, -4.195406e-002, -8.663576e-004, -3.577329e-002, 2.503548e-003, -1.779266e-002, -1.467241e-002, 4.715701e-003, -4.942309e-003, 2.980689e-002, 3.153127e-002, 5.415445e-002, -6.489215e-003, 6.084362e-002, 5.666566e-002, -5.127638e-002, 4.906209e-002, 5.611206e-002, 3.812037e-002, -3.745110e-003, 1.126521e-002, -4.347578e-003, -1.333591e-002, 3.660745e-002, -1.991510e-001, -6.644503e-002, 5.246760e-003, 6.854544e-003, 3.964381e-002, 1.044357e-002, 4.669840e-003, 6.903415e-003, 6.632168e-003, 5.106472e-003, -2.099625e-003, 8.950072e-003, 5.626787e-002, 2.599610e-002, 2.155745e-003, -1.092570e-002, 4.392891e-003, -1.397475e-003, -1.092621e-003, 5.199141e-003, -1.103634e-002, 2.863816e-002, 1.451528e-002, 5.656330e-002, 2.929840e-002, 1.819247e-002, -5.055351e-003, -2.257394e-003, -1.699922e-003, 3.822935e-003, 3.518046e-003, 1.367740e-003, 3.696468e-002, 3.179513e-003, 1.622883e-002, -2.593753e-002, 1.340275e-002, -3.229694e-002, 2.139383e-002, 2.139383e-002, -3.229694e-002, 1.340275e-002, -2.593753e-002, 1.622883e-002, -9.100101e-003, -3.392038e-002, 1.296508e-001, -1.273057e-001, -1.064593e-001, -4.718636e-002, -1.204480e-002, 2.637922e-002, 6.332851e-002, 1.403465e-001, 1.609966e-002, 7.383000e-002, -4.278181e-002, 4.872109e-002, 1.069368e-004, -2.154433e-002, -2.348874e-003, -1.460302e-002, -6.046775e-002, -7.660599e-002,


© ISO/IEC 2004 — All rights reserved

Copyright International Organization for Standardization
Provided by IHS under license with ISO
No reproduction or networking permitted without license from IHS
Not for Resale

1.216287e-001, -1.362812e-002, -1.474966e-002, 1.936946e-002, -5.333769e-002, -9.172577e-003, -6.398742e-003, 3.219584e-003, 2.258036e-003, 1.514293e-002, -2.473316e-002, -1.469788e-001, 4.048263e-002, -8.693496e-002, 1.510986e-002, -4.514669e-003, 9.849398e-003, 2.173528e-003, 1.189304e-003, 2.353969e-002, 7.423544e-003, -1.425847e-002, 3.067510e-002, -8.404367e-003, 5.575797e-002, 8.998049e-003, 1.723872e-003, 4.011901e-003, 1.991426e-004, -3.546461e-003, -3.765020e-003, -5.696943e-003, -8.041000e-003, 1.422536e-002, 4.987143e-002, 3.246097e-002, 3.642050e-002, -1.449612e-002, 1.262551e-003, 1.287484e-003, -2.076523e-003, 2.574481e-003, 6.150487e-004, 5.729747e-003, 2.999997e-003, 5.066131e-002, -1.011219e-002, 6.602389e-003, -4.239865e-003, 1.350460e-002, -4.967278e-003, -3.091699e-003, -3.091699e-003, -4.967278e-003, 1.350460e-002, -4.239865e-003, 6.602389e-003, -6.543850e-002, 1.172018e-001, 4.206626e-002, 4.760231e-002, 1.417529e-002, 7.540714e-003, 2.820280e-002, 6.292251e-002, -2.759632e-002, 1.613262e-002, 9.111121e-002, 5.095411e-003, -3.923588e-002, -7.366797e-002, -2.250010e-002, -2.015696e-002, -7.296428e-003, 7.459829e-003, -7.358496e-003, -5.068322e-002, 7.783854e-002, 2.516234e-002, 3.496046e-003, 1.005375e-001, -5.042876e-002, -4.364869e-002, -1.130809e-002, -9.255467e-003, 1.023240e-002, 1.055395e-002, 4.303018e-002, 4.593683e-002, -6.238613e-002, -3.864676e-002, 3.305062e-002, 2.852847e-002, -1.846873e-002, -3.286245e-004, -7.894950e-003, 8.196719e-003, 1.549201e-002, -4.699298e-003, 1.434144e-002, -3.177170e-003, 4.515167e-002, -2.253355e-002, 1.982683e-003, -1.748225e-002, -2.525691e-002, -1.329422e-002, 1.086198e-003, 2.759469e-003, -5.029966e-003, -8.027735e-003, -2.731864e-003, 6.467759e-003, 2.209913e-002, -1.312871e-002, -2.144736e-003, -6.593979e-003, -9.701414e-003, 5.141669e-004, -3.244228e-003, -1.252772e-002, -1.602512e-002, -2.096137e-002, 2.679385e-003, -9.988734e-003, 1.471437e-002, 1.143873e-003, -8.912576e-003, 3.767951e-002, 3.767951e-002, -8.912576e-003, 1.143873e-003, 1.471437e-002, -9.988734e-003, 3.166596e-002, 4.365713e-002, -1.762158e-002, 1.127513e-001, 3.461536e-002, 4.950829e-002, -7.061854e-003, -6.457658e-002, -7.034424e-002, 4.694154e-002, 2.166958e-002, 6.140188e-002, 1.666126e-001, 6.074739e-003, -1.260340e-001, -3.712937e-002, 1.478638e-002, -2.167042e-002, -3.410345e-002, 1.428030e-002, 1.902492e-002, -6.222791e-002, -3.955633e-002, -1.028653e-001, 9.419100e-003, -3.611391e-002, -2.550005e-002, -7.777827e-003, -1.545727e-002, -1.720678e-002, 4.254848e-004, -8.381861e-003, -5.496180e-002, -6.157894e-002, 2.163434e-002, -4.092259e-002, -2.794235e-002, 1.666965e-002, -2.748639e-003, -6.493124e-003, 1.277840e-002, -3.378853e-003, -1.547279e-002, 1.165611e-002, 4.285439e-002, -5.061370e-003, -2.400310e-002, -2.294902e-002, -1.059894e-002, -7.359117e-003, -2.483375e-003, -8.635618e-003, -2.457884e-002, -1.424725e-002, -2.975701e-002, 2.563513e-002, -1.585038e-002, -2.048462e-002, -2.075867e-002, -1.346086e-002, -3.756481e-003, -4.683203e-003, -6.408191e-003, -1.048651e-002, 8.448252e-004, 5.302048e-003, -1.108341e-002, -1.431833e-002, -1.295450e-002, -1.295450e-002, -1.431833e-002, 5.934091e-002, 5.810972e-003, 8.228909e-003, 7.160729e-003, 3.166302e-003, 6.747120e-003, -2.931476e-002, 2.155585e-002, 3.259863e-003, 1.725633e-003, 2.610570e-002, 7.427000e-003, 1.453729e-002, 1.453729e-002, 7.427000e-003, 6.042666e-002, -3.063662e-003, 3.614453e-003, -5.665399e-003, -8.515907e-003, -7.355193e-002, -8.540484e-004, 3.785538e-003, -9.181849e-005, -2.140062e-003, -2.233869e-002, -8.896633e-003, 9.588380e-004, 9.588380e-004, -8.896633e-003, -4.558482e-002, -1.616451e-002, -1.003788e-002, -6.373439e-003, -1.918976e-002, -3.942180e-002, -6.674754e-003, -4.226017e-003, 3.542638e-004, -3.036130e-003, 6.270737e-003, -3.077304e-002, 4.607546e-003, 4.607546e-003, -3.077304e-002, 4.037778e-002, -2.397567e-002, -2.022036e-002, -4.832007e-002, 1.848845e-002, 1.196530e-002, -5.620392e-003, -9.780079e-003, -3.170722e-003, -4.170631e-002, 2.984681e-002, -5.146172e-003, -6.925294e-003, -6.925294e-003, -5.146172e-003, -1.998006e-002, -4.321823e-003, 1.252502e-002, -1.921390e-003, 1.323511e-002, -1.753878e-002, -1.688549e-003, 1.203522e-002, 6.907252e-003, 9.787107e-003, -4.069650e-002, -6.138724e-002, -3.020956e-002, -3.020956e-002, -6.138724e-002, 4.793194e-004, -3.637628e-002, -1.790096e-003, -5.105661e-003, 1.096851e-002, -1.416115e-002, 6.946217e-003, 3.458547e-003, -1.195202e-003, -3.136184e-003, 3.080689e-002, -4.201982e-002, -5.761928e-002, -5.761928e-002, -4.201982e-002, 2.840362e-003, 3.142995e-002, -8.176694e-003, 5.375948e-003, 1.360791e-002, 5.786991e-003, -5.058417e-003, 4.630391e-003, 1.037521e-003, 2.471613e-003, -1.155942e-002, 3.264131e-002, -6.927880e-003, -6.927880e-003, 3.264131e-002, -1.146129e-003, 1.369443e-002, -9.680419e-003, -7.855283e-004, 2.884176e-002, 2.659461e-003, 1.749449e-002, 8.503860e-003, 8.565751e-003, 2.011294e-002, 6.853497e-002, -5.213413e-002, -3.305283e-002, -3.305283e-002, -5.213413e-002, 7.128795e-002, 3.649362e-002, 1.957535e-002, 1.071592e-002, 3.368240e-002, 2.652898e-002, 2.148409e-002, 1.211690e-002, 1.825854e-002, 2.133535e-002, -6.435333e-002, -4.574037e-003, -4.325850e-003, -4.325850e-003, -4.574037e-003, -2.206160e-002, 1.564496e-002, 6.767436e-003, 6.712780e-003, 7.056372e-004, -4.228152e-002, -4.820461e-003, -5.404754e-004, -1.128143e-003, -2.112038e-004, 3.044467e-002, -5.630449e-002, -2.114284e-002, -2.114284e-002, -5.630449e-002, -1.658580e-003, -9.523212e-003, -1.729988e-003, 5.149475e-003, 1.734634e-002, -3.478131e-002, -3.251683e-003, -2.309280e-003, 1.322204e-002, -6.211181e-003, -3.748104e-002, -2.000447e-003, -1.847800e-002, -1.847800e-002, -2.000447e-003, -2.528358e-002, -3.865688e-002, -1.509594e-002, -4.625904e-003, -8.725381e-003, -1.529238e-002, -9.131513e-003, -2.561826e-003, 1.810894e-003, -5.169056e-003, -4.016923e-002, -8.025814e-003, -2.601825e-002, -2.601825e-002, -

© ISO/IEC 2004 — All rights reserved


Copyright International Organization for Standardization
Provided by IHS under license with ISO
No reproduction or networking permitted without license from IHS
Not for Resale

8.025814e-003, -8.614331e-002, -6.384553e-002, -2.407648e-002, -1.083725e-002, -1.599576e-002, -1.855848e-002, -1.737151e-002, -1.790554e-002, -1.816300e-003, -1.216985e-002, 2.587539e-002, 5.709913e-002, 2.648653e-002, 2.648653e-002, 5.709913e-002, 1.318384e-002, -5.210607e-003, 1.026679e-003, -8.195018e-003, 1.453576e-002, -2.070456e-002, 2.879946e-003, 1.782751e-003, 1.867072e-003, 7.496902e-003, -1.809200e-002, 2.739094e-002, 1.756205e-002, 1.756205e-002, 2.739094e-002, 8.149610e-003, -3.329045e-003, -1.390838e-002, -9.809533e-003, -7.769224e-003, -2.201686e-002, 5.035253e-004, 3.669122e-004, -4.871745e-003, -4.140340e-003, 2.780775e-002, -1.056833e-002, 2.563100e-003, 2.563100e-003, -1.056833e-002, 8.664910e-002, 2.989043e-002, -1.679544e-003, -3.398296e-002, 4.848041e-003, 1.294169e-003, -9.199088e-003, -1.544133e-003, -6.808842e-003, -6.334425e-003},
{1.097243e-003, -9.829066e-004, 2.655625e-003, -6.853048e-003, 1.112604e-003, 7.450420e-003, 1.197439e-002, -1.465813e-002, 3.907817e-003, -1.460120e-002, -2.073515e-002, 4.484082e-002, -2.073515e-002, -1.460120e-002, 3.907817e-003, -1.465813e-002, 1.197439e-002, 7.450420e-003, 1.112604e-003, -6.853048e-003, 2.655625e-003, -9.829066e-004, -2.251837e-002, 2.123890e-002, 3.637286e-003, -9.263953e-003, 1.589418e-002, 2.552495e-002, -6.230709e-002, -7.676746e-003, -9.754442e-003, 3.444020e-002, 8.531745e-003, -1.173563e-002, -4.099867e-002, -2.298095e-002, -1.986933e-002, 1.278827e-003, 2.614456e-003, 4.174260e-003, -3.619467e-002, 4.602399e-003, 1.392709e-002, 5.992873e-003, 2.102321e-003, -1.628594e-002, 3.176971e-002, -5.463278e-002, -1.110110e-002, -3.028702e-003, 3.236720e-002, -2.870035e-002, 4.605752e-002, 4.260290e-002, -2.984601e-002, -1.321765e-002, -8.135472e-003, -1.333006e-002, -1.760162e-003, 8.677257e-003, 7.000440e-003, 4.023458e-003, 2.093248e-002, 1.169264e-002, 5.628723e-002, -6.216959e-003, -6.433579e-003, -1.491532e-003, 3.039021e-002, -7.108678e-004, -4.611278e-002, -9.237005e-005, -1.603076e-002, 1.920973e-002, -3.812874e-002, -2.854632e-003, 4.261460e-003, 2.905152e-003, -1.957237e-002, 5.362441e-002, -6.836816e-003, 6.354399e-002, -2.109866e-002, 2.320296e-003, -1.016665e-002, -5.083973e-004, 4.799850e-003, 3.949205e-002, 9.708982e-003, 3.629575e-003, -5.853220e-003, -6.049703e-002, 3.673324e-002, 6.720186e-002, 9.821905e-002, 5.055722e-002, 1.750499e-002, 5.273236e-002, -1.464343e-002, -9.435726e-002, -1.763322e-002, 8.425560e-002, -1.614894e-002, 6.981374e-002, 1.661924e-002, 1.575574e-002, 5.595877e-002, 3.722852e-002, 2.552070e-003, 1.213133e-002, -4.321411e-002, 6.244296e-002, 2.707421e-002, -3.669805e-002, -6.643828e-002, 2.086511e-002, 3.768856e-002, -1.350074e-002, -3.935943e-002, -7.597652e-002, -3.210919e-002, -3.946774e-002, -8.989961e-002, 1.138072e-002, -6.441223e-003, 4.039193e-002, -1.353016e-002, 1.319940e-002, 1.693280e-003, 4.537312e-003, -2.075207e-002, -6.002723e-002, 6.316815e-003, 2.081704e-002, -3.208080e-003, -2.678598e-002, 9.154488e-003, -3.408801e-003, -2.306249e-002, 6.042983e-003, -7.229372e-002, 1.764937e-002, 1.888549e-002, -1.636614e-002, -7.922442e-002, -6.479339e-002, 6.075528e-002, 2.639664e-002, -1.584659e-002, -3.428719e-002, -3.611665e-003, -2.270035e-002, 1.051247e-002, -1.240513e-002, 1.811196e-002, 1.837724e-002, 5.144001e-003, -2.400140e-002, 3.909248e-002, 6.965012e-002, 1.378534e-002, -6.680587e-002, 4.042518e-002, -3.188039e-002, -5.299673e-002, 1.888879e-002, 6.392068e-002, 2.781493e-002, -1.857433e-002, -2.939479e-002, -5.967402e-002, 6.753355e-002, 5.459547e-002, 1.652801e-003, -5.122453e-002, 5.285742e-002, -1.922034e-002, 3.373444e-002, 5.915030e-002, -5.466069e-002, -2.656044e-002, 1.336476e-002, 5.323399e-002, -2.527505e-002, -7.998134e-002, -4.433921e-002, -3.801381e-002, 3.042139e-002, 1.010982e-002, 5.273004e-002, 7.622705e-002, -3.367152e-002, 4.101243e-002, 1.399561e-001, -1.174588e-002, 1.154114e-002, 1.838480e-002, 2.676338e-003, -1.614525e-004, 6.524613e-003, 9.386429e-002, 5.563482e-002, 5.920870e-002, 5.898383e-002, -7.241446e-002, -3.381091e-002, -3.350550e-002, -3.493485e-002, -2.013261e-002, 2.341582e-002, 1.084050e-002, -1.628756e-002, 3.557576e-002, -2.634967e-002, 7.677217e-003, 2.255169e-002, -4.273400e-002, -7.759077e-003, 7.680506e-002, -3.879445e-002, -7.325918e-002, 8.032786e-002, 1.608378e-002, -3.307789e-002, 4.659985e-002, 1.197190e-001, -4.229304e-002, -2.982062e-002, -4.022431e-002, -2.512200e-002, -1.454821e-002, 3.281816e-003, 1.415026e-002, -2.188178e-002, -1.213191e-002, -3.259269e-002, -1.015943e-002, 3.488649e-002, -5.015356e-002, 3.399148e-002, 1.720334e-002, -3.577036e-002, 1.111679e-001, -2.620497e-002, 5.719999e-002, -6.604240e-002, -2.349472e-002, 4.325626e-003, -3.544217e-002, -1.523047e-002, -2.405781e-002, -2.449825e-002, -4.107142e-004, 4.916010e-003, 2.010654e-003, -1.104338e-002, 3.160658e-004, -2.118655e-002, 1.572615e-003, 2.805606e-002, -5.200741e-002, 5.413956e-003, -1.916721e-002, -4.595574e-002, -2.398118e-002, 1.035662e-001, -5.314710e-003, 5.345678e-002, -4.968729e-002, 2.496512e-002, -2.556541e-002, -1.116367e-002, -1.097114e-002, -1.966592e-002, -2.156915e-002, 6.123890e-003, -1.274126e-002, 2.782819e-003, -9.927712e-003, -1.274481e-002, -1.060335e-002, 1.673722e-002, 1.865405e-002, 3.875616e-002, 6.990557e-002, 1.990573e-002, 3.292455e-002, -4.120837e-002, 8.900794e-002, 4.900444e-002, 2.215280e-002, -1.033061e-003, -3.904304e-002, -3.539036e-002, -2.401336e-002, -1.317121e-003, -8.985553e-003, 1.209320e-002, -3.604103e-003, 7.762745e-003, -1.902907e-003, 6.878971e-003, -6.802553e-003, 6.456169e-003, -1.809880e-002, 4.713866e-002, 1.645638e-002, 3.608127e-002, -2.299951e-002, -8.475109e-003, -2.029165e-002, 3.794366e-005, 1.948343e-002, 9.073645e-002, 9.073645e-002, 1.948343e-002, 3.794366e-005, -2.029165e-002, -8.475109e-003, 2.566311e-002, -1.016447e-002, -4.352142e-002, 2.868591e-002, -1.965270e-002, -1.333038e-002, -2.914377e-002, -1.900839e-002, -5.497809e-002, -


© ISO/IEC 2004 — All rights reserved

Copyright International Organization for Standardization
Provided by IHS under license with ISO
No reproduction or networking permitted without license from IHS
Not for Resale

3.358911e-002, -9.278457e-003, 9.964329e-002, -9.752233e-002, 8.884513e-003, -1.141715e-001, -7.704577e-002, -4.779641e-002, -2.512281e-004, 5.550446e-003, 1.959295e-002, 1.056669e-001, -1.158084e-001, -1.778704e-002, 6.844693e-002, 2.057308e-002, -2.257375e-002, -4.116481e-002, -1.821568e-002, -6.884942e-003, -7.166943e-003, -2.377466e-002, -5.367014e-002, -1.529173e-002, -1.589593e-001, 4.957973e-002, -3.219723e-002, 2.184947e-002, -4.428222e-002, -3.464248e-002, -6.032303e-003, -1.871445e-003, 8.753496e-004, -2.051659e-002, -6.193152e-002, -4.582105e-002, 1.885892e-002, -1.233850e-002, 1.254452e-003, -2.789509e-002, -8.588231e-003, -5.059507e-003, -7.000249e-003, -1.136463e-003, -2.751856e-003, 8.601017e-003, -5.603661e-003, 1.905832e-002, -9.161824e-003, -1.854955e-002, -1.678887e-002, -9.315168e-003, -9.277183e-004, -1.492935e-003, 2.696954e-003, 4.671151e-003, 6.300921e-002, 9.793855e-003, 7.823467e-003, 1.992906e-002, -3.902904e-002, -5.720934e-004, -3.618325e-002, -3.618325e-002, -5.720934e-004, -3.902904e-002, 1.992906e-002, 7.823467e-003, 2.760300e-002, -4.376770e-002, -6.285533e-002, -8.192447e-002, -1.953221e-002, -2.424686e-002, -3.325041e-002, -1.296945e-003, 1.048814e-001, -2.679933e-002, -2.241927e-002, 3.128845e-002, -6.293448e-002, 6.001978e-002, 4.826517e-002, 1.938828e-002, 1.302533e-002, 1.493375e-003, 2.048736e-002, -5.880598e-005, -5.200969e-002, -3.869914e-002, -1.421242e-002, -7.590533e-002, -5.476598e-002, 8.675726e-003, -1.515800e-002, 4.084224e-004, -2.693630e-002, 1.124587e-003, -1.420612e-003, -4.002276e-002, 2.154339e-003, -2.360784e-002, -2.783030e-002, -5.959108e-003, -4.471303e-003, -4.924548e-003, -8.800794e-003, 1.419018e-002, 2.055220e-002, 3.068473e-002, 2.292721e-002, 1.112011e-001, 1.931670e-003, 1.627895e-002, 3.089946e-003, -1.548975e-003, -2.814415e-003, -2.435418e-003, 4.881001e-003, -1.127024e-002, -5.853535e-003, 7.808672e-003, -1.616967e-002, 2.033620e-002, 5.729321e-002, -2.130359e-003, -3.802501e-003, 1.661167e-003, -4.430876e-004, 1.541203e-003, -4.390142e-005, -1.591249e-002, 6.637768e-003, 7.684903e-003, 1.717415e-002, -9.349734e-004, 3.811172e-002, -3.684117e-002, 4.588958e-002, -9.392166e-003, -9.392166e-003, 4.588958e-002, -3.684117e-002, 3.811172e-002, -9.349734e-004, 1.629009e-002, -5.701881e-002, 3.262134e-002, 9.295868e-002, -3.796618e-003, 1.229908e-004, -4.967096e-002, -7.363584e-002, -6.301738e-003, 7.659072e-002, -5.689341e-002, -5.757157e-002, 4.466993e-002, -3.837013e-002, 3.052995e-002, 2.026847e-002, -3.695217e-003, -1.775120e-002, 4.344091e-003, 1.498851e-002, -2.274524e-002, 5.397944e-002, 4.587109e-003, 2.694642e-002, 2.156743e-002, -2.776453e-002, 5.952305e-003, 1.213230e-003, -9.700463e-003, 6.932158e-003, 6.562863e-003, -8.459348e-003, 4.500925e-002, 6.012548e-002, 2.527582e-002, -2.386668e-002, -5.190088e-004, -1.130622e-002, 3.960942e-004, 6.322420e-003, -6.596177e-003, 1.521060e-002, 7.917634e-003, -1.149726e-002, 6.149105e-002, 3.644952e-002, 2.034112e-002, -1.320631e-002, 2.033521e-004, 4.859978e-003, -1.967104e-004, 1.858134e-003, 3.951569e-003, -2.163718e-003, -1.280359e-003, 2.270017e-002, 4.903249e-003, -9.187711e-003, -2.464985e-003, -6.871296e-003, -9.355002e-003, -9.366702e-004, 1.437287e-003, -6.051887e-003, 1.974895e-002, 1.411985e-003, -2.871258e-003, -1.077669e-002, 4.732320e-002, -2.868125e-002, 4.889510e-002, 2.106574e-002, 2.106574e-002, 4.889510e-002, -2.868125e-002, 4.732320e-002, -1.077669e-002, 7.230086e-002, 2.133012e-002, 7.017829e-002, -1.765900e-002, -6.068846e-002, 9.685311e-003, 8.348067e-003, -2.470275e-002, -7.641435e-002, 9.566923e-002, -5.318561e-002, 1.469992e-002, -4.476277e-002, -3.219968e-002, 4.971502e-002, 4.754495e-002, -1.147659e-002, -1.205362e-002, -1.761029e-003, -6.904819e-003, -2.181921e-002, 2.852568e-002, -4.450585e-003, 1.150906e-002, -6.146337e-002, -1.960673e-002, -1.680240e-002, 3.791484e-003, -1.050176e-002, -2.495175e-003, -3.902132e-002, -2.170520e-002, -4.973640e-002, 1.057818e-001, 1.241925e-002, 1.506340e-002, 7.285623e-003, -1.380541e-002, -1.784289e-002, 1.062386e-002, 6.019274e-003, -3.642809e-003, -1.268335e-002, -1.713829e-002, 8.932747e-002, 6.943900e-003, 1.264469e-002, -7.283764e-003, -1.083870e-002, 1.260572e-003, 4.952761e-003, -3.580913e-003, -4.992838e-003, -1.273587e-002, 1.209913e-002, 5.470057e-002, 3.344184e-003, -1.201131e-002, -4.474949e-003, -8.518182e-003, -1.430155e-002, -5.336881e-003, -4.826946e-003, -5.210397e-003, -1.450559e-002, -6.187017e-003, 3.431347e-003, 1.293280e-002, 1.952117e-002, 1.952117e-002, 1.293280e-002, 2.143030e-002, -3.141053e-002, -5.490259e-002, 4.563486e-003, 5.375683e-003, -1.600210e-003, -4.041571e-003, -7.170786e-003, -2.193522e-003, -1.193319e-002, -1.230654e-002, 6.988220e-003, 7.270769e-003, 7.270769e-003, 6.988220e-003, 8.331439e-002, 1.069195e-002, -8.946231e-004, -2.325318e-003, 2.396650e-003, -4.562387e-002, -7.027721e-003, -4.699461e-003, 3.370264e-003, 2.723875e-003, 1.648434e-002, -2.982492e-002, -1.677116e-002, -1.677116e-002, -2.982492e-002, -9.246059e-002, 9.139111e-004, 4.798950e-003, 2.991374e-003, 1.570031e-003, -4.294318e-002, 1.194558e-002, 3.856683e-003, 2.420682e-003, 7.130407e-003, -3.267413e-002, 7.875266e-003, -3.138878e-003, -3.138878e-003, 7.875266e-003, 4.551134e-002, 1.531448e-002, 2.757555e-003, -1.722766e-004, -9.540376e-003, 9.242631e-003, 5.771349e-003, 6.739887e-004, 1.384626e-002, -8.689869e-003, 1.227005e-002, 1.607395e-002, -1.630404e-002, -1.630404e-002, 1.607395e-002, -3.536702e-002, -1.672191e-002, -3.362586e-004, -4.446223e-003, -3.611637e-002, -2.579081e-002, -1.165807e-002, -1.014882e-002, -4.404870e-003, -2.373758e-003, -2.639437e-002, 7.787303e-003, -1.020820e-002, -1.020820e-002, 7.787303e-003, 2.362388e-002, -2.106567e-002, -8.827930e-003, -6.868454e-003, 1.091843e-002, -5.092285e-002, 9.085022e-003, -3.431611e-003, -6.924469e-003, -2.363743e-002, 6.111258e-002, 3.751804e-002, -1.030157e-002, -1.030157e-002, 3.751804e-002, -6.058153e-002,

© ISO/IEC 2004 — All rights reserved


Copyright International Organization for Standardization
Provided by IHS under license with ISO
No reproduction or networking permitted without license from IHS
Not for Resale

3.887621e-004, -4.809901e-003, 5.356125e-003, -6.246804e-003, -3.689514e-002, -1.436629e-002, -4.902542e-003, -3.218313e-003, -9.532261e-004, -3.512894e-002, 3.917298e-003, 4.495174e-002, 4.495174e-002, 3.917298e-003, -7.374103e-003, 3.974932e-003, 4.529855e-003, 8.054219e-003, 2.623282e-002, -4.538950e-003, -1.214194e-003, 1.867350e-003, 9.571635e-003, -6.459063e-003, -1.767529e-002, 1.298154e-002, -1.378675e-002, -1.378675e-002, 1.298154e-002, -6.415624e-002, -3.307321e-002, -2.866391e-003, -3.000672e-002, -5.405010e-002, -2.396272e-002, -1.682784e-002, 5.072012e-005, -1.429566e-002, -1.501891e-002, 1.524708e-002, 5.479795e-002, 2.268744e-002, 2.268744e-002, 5.479795e-002, 1.624228e-002, -1.346554e-002, -2.205281e-003, -6.415189e-003, -2.486910e-002, 3.320821e-003, 1.289364e-002, -7.515632e-003, -5.614356e-003, 5.705651e-003, -4.343708e-002, -3.430418e-002, -2.112233e-002, -2.112233e-002, -3.430418e-002, 7.509566e-003, -2.828204e-002, -1.388643e-002, -7.847440e-003, -2.512020e-002, 2.187164e-002, 7.740185e-003, -3.222738e-004, -2.505813e-003, -2.899258e-003, 1.576307e-002, -4.703370e-002, -1.952025e-002, -1.952025e-002, -4.703370e-002, -1.019385e-002, -3.174146e-002, -3.627860e-004, 2.883925e-003, -3.307589e-003, -1.216794e-002, -1.345555e-002, -1.285220e-002, 1.385090e-003, -5.128041e-003, 1.948141e-002, -2.164680e-002, -2.214296e-002, -2.214296e-002, -2.164680e-002, -1.313699e-001, 3.082040e-002, 2.230193e-002, 2.063919e-002, 7.079040e-002, -1.339365e-002, -1.507751e-003, 4.518717e-003, 3.801464e-003, 1.957581e-002, 1.209495e-004, -8.558568e-002, -4.739057e-002, -4.739057e-002, -8.558568e-002, -1.198386e-002, -2.564119e-003, -3.531488e-004, 5.982700e-003, 6.872175e-003, 2.467768e-002, -5.313183e-003, -6.126709e-004, 4.495708e-003, 2.056003e-002, 2.578050e-002, -2.220269e-002, -1.450764e-002, -1.450764e-002, -2.220269e-002, 2.016691e-002, -4.377575e-002, -6.140381e-003, -3.013413e-003, -8.880524e-003, 2.847336e-002, -5.601454e-003, -3.973760e-003, -4.637511e-003, -3.826860e-003, -9.777510e-004, -8.171458e-002, -1.254008e-003, -1.254008e-003, -8.171458e-002, -1.235568e-001, 7.362113e-002, 5.331399e-002, 8.479583e-003, -2.674902e-002, -1.384596e-002, 1.192563e-002, -6.741775e-004, 2.473722e-003, -8.682113e-003},
{-8.018278e-004, 3.906207e-003, -3.192445e-004, 1.432821e-003, 1.470432e-002, 3.853497e-003, 4.285284e-003, -8.654600e-004, -4.199069e-003, -2.359702e-002, -2.193064e-002, 2.862319e-002, -2.193064e-002, -2.359702e-002, -4.199069e-003, -8.654600e-004, 4.285284e-003, 3.853497e-003, 1.470432e-002, 1.432821e-003, -3.192445e-004, 3.906207e-003, -2.965515e-003, -1.298783e-002, 4.458442e-004, 1.762067e-003, -1.643893e-002, -2.193544e-002, 9.560427e-003, -1.666002e-002, -1.468981e-002, -2.852494e-002, -3.375732e-002, -4.178188e-002, -1.005393e-002, 4.450086e-002, -1.297437e-003, 5.267464e-003, 5.257434e-002, 3.578165e-003, 2.232326e-002, -2.244966e-002, 6.357593e-003, 2.299654e-002, -1.736586e-002, 1.426429e-002, -4.400300e-003, 2.005467e-004, 3.077603e-002, 5.382103e-002, 5.088101e-003, 5.819907e-003, 5.983874e-003, -1.504900e-002, 3.969382e-002, -4.992654e-002, -4.043042e-002, -3.279892e-002, -2.132351e-002, -5.977973e-002, 3.129856e-003, -1.249007e-002, 1.607094e-002, 2.302008e-003, 2.631585e-002, -1.913044e-002, 1.779448e-002, 7.336667e-003, -3.701854e-002, -5.431718e-002, -1.185391e-002, 6.358683e-002, -5.858535e-002, -1.652528e-002, -3.920442e-002, -3.233199e-002, 1.998931e-002, 2.083107e-002, 6.757558e-003, 6.932938e-002, -7.324094e-002, -8.131967e-002, 3.900354e-002, 6.186478e-002, 1.442893e-002, -1.934832e-002, -4.938785e-002, 4.211711e-003, -3.148813e-002, 3.067046e-002, 1.256794e-002, 5.106353e-004, -3.585958e-002, 2.188233e-002, 1.038979e-001, -3.546556e-002, 4.014959e-002, 6.364516e-002, -2.187721e-002, 5.684003e-002, 2.116601e-002, 4.968701e-002, 3.037833e-002, -8.554594e-003, 7.005020e-002, 3.773281e-002, -2.628031e-002, 4.408302e-003, -4.639238e-003, -2.889634e-002, -1.477102e-003, 1.813229e-002, -3.770395e-002, -6.182728e-002, -6.960751e-002, -2.052514e-002, -1.224311e-002, -4.343927e-002, -7.471576e-003, -7.330650e-002, -1.265941e-002, 4.462949e-002, -2.000534e-002, 2.994301e-003, 1.485740e-002, 5.107170e-003, 2.194664e-002, 2.180444e-002, -1.410932e-002, -1.714509e-002, -4.048042e-002, 1.989889e-003, 2.006700e-002, 5.338726e-002, 6.055123e-002, 3.423433e-002, -3.922290e-003, 5.537372e-002, 2.420926e-003, -2.088738e-002, -2.587405e-002, -4.749281e-002, 1.241133e-002, -8.043071e-003, 3.135502e-003, -7.137217e-002, -5.655547e-002, 1.977365e-002, 4.379407e-002, -4.532702e-002, -3.780741e-002, 2.202735e-002, 3.982218e-002, 3.204940e-003, 2.979450e-002, -5.555119e-003, 3.249222e-003, 8.681806e-002, 4.829758e-002, -1.230365e-003, -6.207272e-002, -1.969686e-002, -2.343480e-003, -2.959400e-003, -5.444449e-004, -1.168150e-002, -5.999697e-002, -1.743771e-002, 1.406106e-003, -5.054800e-002, -5.278889e-002, -5.673010e-002, 2.386888e-002, 4.596788e-002, 2.048437e-002, 2.033933e-002, -4.410239e-002, 3.615376e-002, -4.703566e-003, -1.685376e-002, 5.433165e-002, -1.971322e-002, 1.287656e-002, -1.180049e-002, -6.233621e-003, -1.795453e-002, -8.788889e-003, 3.584792e-003, -2.820969e-003, 1.959557e-003, -1.378426e-003, -8.619792e-002, -2.337166e-002, -6.933141e-002, 1.295030e-002, -1.831756e-002, 2.158748e-002, 8.721564e-003, 3.635349e-003, -9.299952e-002, -1.768302e-002, -7.498208e-002, -1.037887e-002, 8.851369e-002, 8.208785e-003, -6.564386e-004, 5.221751e-003, 1.587316e-005, -1.792755e-002, 1.280272e-002, -7.733804e-003, 1.939338e-002, 3.645101e-002, -8.868077e-003, -6.573408e-002, 1.907556e-002, -5.604726e-002, 1.860236e-002, 1.393107e-002, -3.228582e-002, -2.511863e-002, 5.824724e-002, 5.796257e-002, 3.969204e-002, 7.271301e-002, 1.131313e-002, 2.155399e-002, 1.347443e-002, 3.275043e-004, -5.077771e-003, 6.591506e-003, 2.984305e-003, 1.519950e-002, 8.134994e-003, 1.827128e-002, 7.786453e-003, 3.747841e-003, 8.591570e-003, -3.279257e-002, 9.054806e-002,


© ISO/IEC 2004 — All rights reserved

Copyright International Organization for Standardization
Provided by IHS under license with ISO
No reproduction or networking permitted without license from IHS
Not for Resale

4.133808e-003, -3.658353e-002, 3.155498e-002, -1.228595e-003, -3.120232e-003, 6.599879e-002, 2.637493e-002, -4.596473e-003, -1.449713e-004, -4.945338e-003, -1.215764e-003, 2.341465e-003, 1.495732e-002, 9.917428e-003, -7.291975e-003, 4.434188e-003, 2.899239e-003, 1.800337e-004, 2.483147e-002, 5.086833e-003, 5.971470e-002, 5.507955e-003, -7.612613e-003, -3.062339e-002, -3.709473e-003, 5.492007e-002, 8.974757e-002, 1.090288e-001, -2.093175e-002, -1.701717e-002, -2.620274e-002, -2.678964e-002, -1.591891e-002, 5.635468e-003, 2.115106e-003, 1.425889e-002, 1.284281e-002, -2.131341e-003, 1.169360e-002, -2.100114e-002, 3.827888e-003, 4.190123e-003, 2.357215e-002, 3.400446e-002, -7.461230e-003, -4.544457e-002, -7.224269e-002, -8.218641e-002, -1.884070e-002, -2.245623e-002, -1.912094e-002, -1.153942e-002, -1.970363e-002, -5.073081e-003, -1.096846e-002, 1.557488e-003, -5.246011e-003, 4.752090e-003, 6.667465e-003, 5.818709e-003, -1.640605e-002, -2.099562e-002, -1.028053e-002, -1.382900e-002, -1.151294e-002, -9.153728e-002, -9.141290e-003, -1.863185e-003, 1.939497e-002, -3.135409e-003, 2.669852e-002, -3.272879e-002, -3.653527e-003, -2.953421e-002, -2.953421e-002, -3.653527e-003, -3.272879e-002, 2.669852e-002, -3.135409e-003, 3.116034e-002, 2.479151e-002, 4.396946e-002, 6.750723e-003, -2.774543e-002, 3.369685e-002, 1.826540e-003, -1.710777e-003, 8.760079e-003, -8.216960e-002, 1.393804e-001, -1.144985e-001, -2.229254e-002, -6.605006e-002, -1.308804e-002, -1.907122e-002, -1.233561e-002, 7.219548e-003, -5.263957e-003, 3.967558e-003, -1.167333e-001, -3.138305e-002, 1.007493e-001, 8.676493e-002, 3.998631e-003, -3.325891e-002, -3.113282e-002, -1.127612e-002, 2.784079e-003, -3.831301e-003, -3.618637e-003, -1.919344e-002, -1.267957e-001, -7.552562e-002, 1.515179e-002, 4.029223e-002, 1.176955e-002, -1.187587e-002, -1.073101e-002, 2.309046e-003, 5.504633e-003, 7.435749e-003, 3.340994e-004, -5.788350e-003, 4.759303e-002, 6.515653e-003, 2.747625e-002, 2.564052e-002, 1.642308e-002, 1.259284e-002, 5.461451e-004, 1.053669e-003, -1.022624e-003, 5.031013e-003, 4.909249e-002, 1.348315e-002, 5.122760e-002, -5.919455e-003, 2.877369e-003, 9.863585e-004, 3.506966e-003, -9.822914e-004, -7.164864e-003, -6.814558e-003, 1.004205e-002, -1.312116e-003, -5.267982e-003, 5.589975e-003, -4.529723e-002, 2.838523e-002, 3.098527e-003, -2.030682e-002, -2.030682e-002, 3.098527e-003, 2.838523e-002, -4.529723e-002, 5.589975e-003, -7.185348e-003, 1.551153e-002, -3.124947e-002, -1.430465e-002, 1.733438e-002, 5.304253e-002, 7.819827e-002, 1.099340e-001, -2.096697e-002, -3.842360e-002, -3.160441e-002, 7.491251e-002, 1.711729e-001, -6.123832e-002, -8.929366e-003, 1.668905e-002, 1.125298e-002, -1.101752e-002, -1.259623e-002, 6.686376e-002, 2.218073e-002, 1.015184e-001, -1.556888e-001, -9.769816e-002, -2.210437e-002, -1.952498e-003, 1.084127e-003, 1.081232e-002, 5.219771e-003, -2.985575e-002, -1.000542e-002, -4.118942e-002, -6.743030e-002, 6.991155e-002, 8.999899e-003, -4.376243e-003, -4.612219e-003, -7.044284e-003, 1.458101e-003, 9.171196e-003, 6.592235e-003, -8.824288e-003, 2.450124e-002, 9.512964e-002, 6.962266e-002, 5.150043e-002, -5.168820e-003, 9.132018e-004, 8.647175e-004, 4.394880e-003, 5.714495e-003, 7.664095e-003, -1.852786e-003, -1.340867e-002, -1.969514e-002, 2.199399e-002, 1.627492e-002, -1.501597e-002, -1.945183e-003, 3.605602e-003, 2.425179e-003, 1.307950e-002, 1.095714e-002, -8.835516e-003, -2.388667e-002, 2.952356e-003, -9.696844e-003, -3.026878e-003, 1.983690e-002, -8.712279e-003, -2.026916e-002, 4.043262e-002, 4.043262e-002, -2.026916e-002, -8.712279e-003, 1.983690e-002, -3.026878e-003, -2.097780e-002, 3.908653e-002, 1.731834e-002, 1.276049e-002, -8.688601e-003, 1.909042e-002, 4.676462e-002, 3.234296e-002, -8.222631e-003, 2.141943e-003, -7.894132e-003, 7.266642e-002, -5.688990e-002, 9.929817e-002, -1.527997e-002, -1.413225e-002, 6.722631e-004, 4.443361e-003, -2.400639e-002, 3.930157e-003, 6.426364e-002, 1.703547e-002, 1.078220e-002, -9.043900e-002, -6.895208e-002, -1.072376e-004, -2.305361e-002, -1.674266e-002, -7.498508e-003, -1.755516e-002, 3.064190e-003, 4.600152e-002, 5.972017e-002, -1.285100e-002, -6.540472e-002, -1.450961e-002, -3.220398e-002, -1.489913e-002, -1.169417e-002, -5.198948e-003, -8.000233e-003, -2.066287e-002, -5.454771e-002, -1.363000e-001, 7.157917e-002, -9.574515e-003, -6.022690e-003, 3.370909e-003, -1.556865e-002, -1.293530e-002, 7.985560e-003, 1.294163e-003, -1.628826e-003, 1.398733e-003, -1.902415e-003, 1.271690e-002, -2.012470e-002, -1.769212e-002, -1.601613e-002, -1.260109e-002, -1.374568e-002, -3.100782e-005, -8.040076e-003, -6.223102e-003, -9.921504e-003, -3.429717e-002, -5.231975e-003, 4.581970e-003, 1.640961e-002, -1.375758e-002, -2.534336e-002, 6.491317e-002, 6.491317e-002, -2.534336e-002, -1.375758e-002, 1.640961e-002, 4.581970e-003, 4.854448e-002, 2.365613e-002, 1.859260e-002, -8.216109e-002, -6.018830e-002, 3.274033e-003, -2.246506e-002, 2.341270e-002, -2.038952e-002, -6.611976e-002, -4.378248e-002, -6.168241e-002, 6.664276e-002, -5.561941e-003, 8.363724e-002, 4.013059e-002, 1.190751e-002, 2.687802e-002, 9.586648e-003, -1.256854e-002, -1.562167e-003, -1.332915e-002, -6.830918e-004, -3.425539e-002, 1.849042e-002, -1.382549e-002, 2.257781e-003, 6.533942e-003, -6.902943e-003, -3.368693e-002, -9.991120e-003, 5.740822e-003, 6.779337e-002, -6.316025e-002, -1.129623e-001, -3.896501e-002, -1.614486e-002, -1.085198e-002, -9.018264e-003, -2.924440e-002, -2.750320e-002, -3.312246e-002, -2.257378e-002, 1.215963e-003, 6.094409e-002, 6.521255e-003, -4.660533e-003, 2.749882e-003, 1.018609e-002, 6.510780e-003, -1.518004e-002, -1.562967e-003, 1.368157e-002, 1.613213e-002, 5.317953e-003, 1.385303e-002, -1.438169e-002, -2.739394e-003, -1.406611e-002, -5.930879e-003, 2.041182e-003, -1.096022e-003, 4.961122e-003, 9.581053e-003, 5.473723e-003, 3.150804e-003, 1.623655e-002, -4.864631e-003, 1.573182e-002, 1.573182e-002, -4.864631e-003, -1.116471e-002, -6.920100e-002, -4.489061e-002, -

© ISO/IEC 2004 — All rights reserved


--`,,```,,,,````-`-`,,`,,`,`,,`---

Copyright International Organization for Standardization
Provided by IHS under license with ISO
No reproduction or networking permitted without license from IHS
Not for Resale

1.203785e-002, -3.684641e-002, 6.183100e-003, -6.537881e-003, -1.070767e-002, -5.932512e-003, -1.769658e-002, -3.406901e-002, 5.174737e-002, 1.918686e-002, 1.918686e-002, 5.174737e-002, -6.253427e-002, 4.682822e-002, 9.236910e-003, 7.671448e-003, 4.450162e-003, -2.719480e-002, 4.267867e-002, 1.077014e-002, 3.846230e-003, 8.099045e-003, 2.166998e-002, -1.516881e-002, -8.676820e-003, -8.676820e-003, -1.516881e-002, 3.642268e-003, 3.960404e-003, 4.739486e-003, 9.265260e-003, 2.803738e-002, 3.512522e-002, 1.567707e-003, 1.155279e-003, 1.607434e-003, 1.509312e-002, -1.031154e-002, -1.491525e-002, 9.804347e-002, 9.804347e-002, -1.491525e-002, -5.271086e-002, -1.570667e-002, -7.182443e-003, -7.187484e-003, -7.556662e-002, -1.057426e-002, -1.463517e-002, 1.623078e-003, -8.157326e-003, -1.344727e-002, -6.588918e-002, 2.499496e-002, -6.397545e-002, -6.397545e-002, 2.499496e-002, 3.852572e-002, 3.901432e-002, 1.825742e-002, -1.229025e-002, 1.591227e-003, 2.759875e-002, 2.008335e-002, -4.922125e-003, 2.951149e-003, 5.618166e-003, 1.031166e-001, -1.061808e-001, -1.938036e-002, -1.938036e-002, -1.061808e-001, 2.411023e-002, -1.058458e-002, -6.700456e-003, -6.718897e-004, -4.578533e-002, -8.944232e-003, 6.948162e-003, 4.827104e-004, -2.465994e-003, 1.615638e-002, -6.986403e-002, -1.000493e-002, 1.027149e-003, 1.027149e-003, -1.000493e-002, 4.789628e-002, -2.858916e-002, -8.592966e-003, 1.542455e-003, -1.231562e-002, 4.385639e-003, -4.394022e-003, -8.518633e-004, -6.261211e-003, -2.044570e-003, 5.323761e-002, 6.062367e-002, -7.763235e-003, -7.763235e-003, 6.062367e-002, 3.574762e-003, 2.190670e-002, 2.053882e-003, 3.001939e-002, 1.187298e-002, 2.133626e-003, -1.109702e-003, -2.213278e-003, 8.643443e-005, 7.199632e-004, 4.293939e-002, -5.368074e-002, -3.342118e-002, -3.342118e-002, -5.368074e-002, -4.525475e-002, -5.017883e-003, 7.845048e-004, -1.288967e-002, -4.752165e-003, -2.034326e-002, 3.192752e-004, -2.334218e-003, -3.922583e-005, -2.088393e-002, -7.913775e-002, 3.205818e-002, -9.498619e-003, -9.498619e-003, 3.205818e-002, 3.425654e-002, 2.005350e-003, -4.883631e-003, -8.787118e-003, -2.420477e-002, -3.671604e-003, -1.294309e-002, -1.022741e-002, 1.036012e-003, -5.878055e-003, 3.251618e-002, 1.241843e-002, 1.696733e-005, 1.696733e-005, 1.241843e-002, -2.556140e-002, -1.196105e-002, 1.334484e-003, -7.808589e-003, -4.740432e-003, -1.536113e-002, -3.999969e-003, -1.224215e-003, -1.146356e-002, 3.378651e-003, -2.712280e-002, -4.132007e-002, -2.903446e-002, -2.903446e-002, -4.132007e-002, -1.234598e-002, 1.184022e-002, 7.185916e-003, -1.821860e-003, 9.081783e-003, -1.654305e-002, -1.100872e-002, -4.183118e-003, -4.787640e-003, -1.080426e-003, -1.489775e-002, 6.690655e-003, -2.693350e-002, -2.693350e-002, 6.690655e-003, 3.296236e-002, 2.291418e-002, 9.671227e-004, 1.798524e-002, 1.048311e-001, 4.393615e-002, 1.037958e-002, -1.995231e-003, 7.683523e-003, 1.971385e-002, 4.139926e-002, -2.413089e-002, -2.719466e-003, -2.719466e-003, -2.413089e-002, 1.821972e-002, -7.170060e-003, -1.113247e-002, -1.581981e-002, -2.810804e-002, -2.466687e-002, -5.591379e-003, -6.457792e-003, -9.281373e-003, -3.926027e-002, -1.129742e-002, 4.872435e-003, -3.421483e-003, -3.421483e-003, 4.872435e-003, 4.554221e-003, 7.604490e-003, -6.990417e-003, -4.612286e-003, -8.133822e-003, -3.585484e-002, -1.944083e-002, 2.256206e-003, -5.848880e-003, -8.365183e-003, 6.720735e-004, -6.672178e-003, 2.316198e-003, 2.316198e-003, -6.672178e-003, 4.777979e-002, 5.225569e-002, 5.246147e-003, 6.039343e-003, -7.717991e-003, 1.296418e-002, -4.003600e-003, -7.901278e-004, -1.131670e-002, -1.622300e-003},
{-5.288771e-004, -2.330023e-003, -3.884583e-003, 1.504198e-002, -1.186801e-002, -1.336831e-002, -7.060370e-003, 6.664912e-003, -8.852563e-003, 1.697482e-002, 6.963587e-003, 1.613451e-003, 6.963587e-003, 1.697482e-002, -8.852563e-003, 6.664912e-003, -7.060370e-003, -1.336831e-002, -1.186801e-002, 1.504198e-002, -3.884583e-003, -2.330023e-003, -7.798456e-003, 7.890762e-003, 5.327496e-003, 1.871320e-003, -8.331298e-003, -4.701679e-002, 3.465967e-002, 2.554839e-002, -1.742091e-002, -2.840026e-003, 3.727493e-002, -9.209574e-003, 1.648503e-002, -2.859784e-003, 2.098265e-002, 2.183141e-002, 3.197390e-002, -1.972176e-003, 2.610156e-002, -1.068361e-002, -2.780520e-002, -9.676909e-003, 7.257724e-003, -1.017589e-002, -1.069767e-002, -2.116372e-002, 6.177039e-003, -2.184444e-002, 4.739910e-002, 5.756272e-002, -2.973535e-003, 7.371576e-002, 3.659051e-002, 7.887881e-003, 3.197406e-002, 2.839651e-002, 2.200174e-002, 2.010474e-002, -3.963679e-002, 1.012139e-002, -3.433188e-002, -3.925359e-002, -4.500761e-002, 1.496364e-002, -1.894165e-003, 4.494171e-002, -4.880427e-003, 3.107630e-002, 2.567764e-003, -1.190559e-002, -1.674165e-002, -3.618168e-003, 1.027203e-001, 5.745910e-002, 1.249516e-002, 8.718357e-002, 3.468001e-002, 1.050973e-001, 8.000220e-003, 4.141607e-002, 3.972077e-003, -1.495855e-002, 1.002832e-002, -2.532157e-002, -9.327403e-003, 5.947540e-002, -1.651728e-003, 1.295795e-002, -4.267303e-002, 2.252947e-002, 3.492426e-002, -6.465168e-003, 6.825001e-002, 7.104318e-003, -1.350572e-002, -5.828356e-002, 2.445268e-002, 3.321184e-002, 6.680913e-002, 3.704296e-002, 2.550700e-003, 3.137978e-002, -2.442034e-002, 1.071537e-002, 4.321092e-002, 1.570280e-002, -2.444032e-002, 1.926378e-002, -2.496865e-002, -8.454924e-002, -6.991536e-003, -2.038893e-002, 3.305502e-003, 4.111566e-002, 5.541099e-002, 9.596759e-002, -1.005934e-002, -3.774938e-002, -9.552602e-002, -2.518192e-002, -8.159703e-003, 4.750574e-002, -2.735024e-002, -8.319923e-002, -3.843830e-003, -2.306275e-004, 2.446459e-002, -2.642731e-002, -4.054489e-002, -5.231491e-002, -2.983153e-002, 1.366919e-002, -5.026447e-002, -2.252023e-002, -1.252473e-001, -3.933083e-002, 4.224513e-002, 1.478816e-002, 4.474600e-002, -4.808617e-002, -3.539197e-002, -1.834275e-002, -3.124679e-002, -6.197660e-002, -1.710198e-002, -2.339678e-002, -1.957422e-002, -1.858920e-002, 1.339023e-002, -5.872013e-002, -


© ISO/IEC 2004 — All rights reserved

Copyright International Organization for Standardization
Provided by IHS under license with ISO
No reproduction or networking permitted without license from IHS
Not for Resale

6.442916e-002, -4.498981e-002, -2.081555e-002, 3.103869e-002, -3.835397e-002, 7.051435e-003, 2.654522e-002, 1.768913e-002, -1.330618e-002, 1.243358e-002, -5.613037e-002, -3.577836e-002, 1.956573e-002, -4.970149e-002, 8.891662e-003, -3.587970e-002, -3.450965e-002, -9.385229e-003, 3.329673e-002, 2.107211e-002, 8.794847e-003, -1.148297e-002, -4.188567e-003, -2.953575e-002, 2.227187e-002, 1.224484e-002, -1.209570e-002, -1.034607e-001, -3.502577e-002, 3.254212e-002, -1.785187e-002, -3.236286e-002, -3.733220e-002, 2.810327e-002, -5.436481e-003, -1.940629e-003, -9.500727e-003, -1.201583e-002, 1.311091e-002, 2.214342e-002, 2.957283e-002, 1.962527e-002, 6.962828e-002, 9.117298e-003, 1.660712e-002, 5.285936e-002, 6.105997e-002, -7.240389e-002, -5.958148e-002, -2.280787e-002, 4.010163e-002, -6.324156e-002, 3.754299e-002, 2.309531e-002, -1.362829e-002, 1.676333e-002, 2.418318e-002, 8.187214e-003, 8.888684e-003, -2.676614e-002, -8.756735e-003, 2.000142e-003, 6.952867e-003, 7.427221e-002, -1.764461e-002, -5.934534e-002, -1.721088e-002, -2.926310e-002, 2.165601e-002, -4.377229e-002, 8.235304e-002, 2.274561e-002, 5.610079e-002, 2.957225e-003, -2.778574e-004, 3.510310e-002, 3.711630e-003, 4.146372e-002, 1.630847e-002, -2.741711e-003, -4.173175e-003, 8.691652e-003, 1.889611e-002, 2.982998e-002, 2.648155e-002, 1.612051e-002, 7.325943e-002, 4.984669e-002, 5.247755e-002, -3.110010e-002, -2.575594e-003, 1.126219e-002, -1.743741e-002, 3.868371e-002, -3.401859e-002, -3.132889e-002, 3.874711e-004, 4.893815e-003, 1.543596e-002, 2.049976e-002, 1.641734e-002, 5.516094e-003, 9.533467e-003, 9.711895e-003, 2.234633e-002, 5.111692e-003, 2.081466e-002, 4.944930e-003, -4.907476e-002, 7.978183e-002, 8.884042e-002, -3.429412e-002, -2.481539e-002, -9.335923e-003, 1.259701e-001, 1.302942e-002, 3.543684e-002, 2.818506e-002, 2.728676e-002, 3.236222e-003, 9.497204e-003, 8.893239e-003, 1.014592e-002, -1.262963e-002, 1.271004e-003, 1.229681e-002, 1.004923e-002, 2.437949e-002, 3.046683e-002, 5.711344e-002, -2.189735e-002, 1.876796e-002, 8.660213e-002, 2.505110e-002, -5.939509e-002, 8.132188e-002, -6.943822e-003, 1.215006e-002, -1.201414e-003, 9.658801e-003, 8.999314e-003, 1.285722e-002, 1.107216e-002, 1.227356e-002, 3.696995e-003, 4.054617e-003, 2.815438e-003, 2.427830e-003, 5.698103e-003, 3.348397e-002, 3.204536e-002, 4.371498e-002, 1.214212e-002, -1.380213e-002, -8.290089e-002, -1.466994e-002, -7.486224e-003, -2.025289e-002, 9.518064e-003, 3.925379e-002, -1.205313e-004, -7.889680e-003, -7.889680e-003, -1.205313e-004, 3.925379e-002, 9.518064e-003, -2.025289e-002, -2.691523e-002, 3.524977e-002, -2.968821e-002, -1.810698e-002, 1.189236e-002, 6.181116e-003, 1.537388e-003, 5.164780e-002, 4.834489e-002, -7.347762e-002, -1.329025e-002, -7.547078e-003, 8.681826e-002, 1.394692e-002, 1.733760e-001, 4.410259e-002, 9.513417e-003, -1.647220e-002, -3.653165e-002, -2.646212e-002, -1.004450e-001, -6.409564e-002, 1.315128e-001, 2.279848e-003, 2.826276e-002, 5.302724e-003, -1.007193e-005, -1.906801e-002, -1.697756e-002, -2.454359e-002, -2.728905e-002, -5.578311e-002, -4.304954e-003, 5.824396e-003, -3.250427e-002, -8.466508e-003, -2.404174e-002, 1.309652e-003, 1.110461e-002, -9.092857e-003, -1.184411e-002, -1.228113e-002, -3.919204e-002, -6.404501e-002, 6.732641e-003, -2.586689e-002, -1.202352e-002, 4.039064e-003, 7.253763e-003, 1.378867e-002, -1.138487e-002, -6.249378e-003, -2.343754e-003, -2.628662e-002, -5.135042e-002, 4.551506e-002, 4.494838e-002, -6.618746e-003, 1.191121e-002, 1.363868e-002, 7.626329e-003, -6.216018e-003, -1.724710e-003, 2.604875e-003, -2.314694e-002, 1.487394e-002, -1.732045e-004, 1.871412e-002, -5.723198e-004, -7.719108e-003, 9.167016e-004, 1.879433e-002, 1.879433e-002, 9.167016e-004, -7.719108e-003, -5.723198e-004, 1.871412e-002, 5.117585e-002, 4.296455e-002, -1.174925e-001, 2.753806e-002, 2.007335e-002, -1.328151e-002, -2.529078e-002, -8.252516e-002, 6.706800e-002, 8.330573e-002, -2.021442e-002, -3.728749e-002, -9.737661e-002, -1.384689e-001, -4.720352e-002, -3.203896e-002, -2.769861e-002, 3.079084e-002, 6.749395e-002, 2.001390e-002, -4.803005e-002, 7.699939e-002, 4.387961e-002, -3.738466e-002, -4.809603e-002, -1.340505e-002, -2.160421e-002, -1.735087e-002, -1.967420e-002, -1.469122e-002, -4.081659e-002, 3.875565e-002, -6.974773e-002, -5.669394e-003, -1.086353e-001, -3.606611e-002, -9.861602e-003, -1.437361e-002, -8.928229e-003, -5.544283e-003, -4.581072e-003, -1.854951e-002, -1.969264e-002, -4.977041e-002, -2.995062e-002, -6.888627e-002, -2.200593e-002, -1.290614e-002, -9.300340e-003, -8.119014e-003, 2.726442e-003, 9.126907e-003, 6.779600e-003, -1.443515e-004, -4.811033e-002, 5.884497e-002, -3.649696e-003, -1.803996e-002, -7.035951e-003, -6.146326e-003, -1.799893e-003, -3.644792e-003, 5.130188e-003, 1.365785e-002, -1.152409e-002, -1.258614e-002, 4.905975e-004, 1.093883e-002, 7.191540e-003, -8.036404e-003, -3.629202e-002, -8.705048e-003, -8.705048e-003, -3.629202e-002, -8.036404e-003, 7.191540e-003, 1.093883e-002, 4.120860e-002, 7.076476e-002, -2.039771e-002, 1.793097e-002, 1.046344e-002, 3.246375e-003, -3.140403e-003, 3.783268e-003, -3.892232e-002, 3.200219e-002, -3.883726e-002, 1.075190e-001, 3.540207e-002, -1.772104e-002, 7.852390e-003, 1.879803e-002, 9.798389e-003, 2.017120e-002, -2.064046e-002, -6.437376e-003, -2.868614e-002, 7.995786e-002, -7.967436e-002, 1.006279e-001, -1.980341e-002, -4.822018e-003, -5.356450e-003, 5.112433e-003, -6.211969e-003, -1.358555e-002, 2.556366e-002, 3.902796e-003, 4.348781e-002, -2.550572e-002, 9.299161e-002, -6.445004e-003, 1.330442e-003, -1.507068e-002, -1.963726e-003, 1.132019e-003, 6.391460e-004, 1.295172e-002, 1.407343e-002, 7.550132e-002, 6.565096e-002, 4.909241e-002, 5.425684e-002, 2.053857e-002, 1.393555e-002, 2.248599e-002, -2.569166e-003, 1.637976e-002, 3.458333e-002, 4.476788e-002, 4.095177e-002, 1.403447e-002, 4.233348e-002, 2.904967e-002, 1.782651e-002, 1.204479e-002, 5.335801e-003, 5.997668e-003, 1.057180e-002,

© ISO/IEC 2004 — All rights reserved


Copyright International Organization for Standardization
Provided by IHS under license with ISO
No reproduction or networking permitted without license from IHS
Not for Resale

3.080941e-002, 2.685496e-002, 4.809478e-002, 6.639954e-003, -4.348241e-003, 1.475761e-003, -8.193109e-003, -1.727018e-002, 1.543385e-002, 1.543385e-002, -1.727018e-002, -8.193109e-003, 1.475761e-003, -4.348241e-003, -1.909603e-003, 4.336859e-002, 4.767760e-002, 7.508130e-003, -2.907766e-002, -8.229104e-003, -1.312313e-002, -6.076675e-002, -7.085094e-002, -1.737241e-002, 9.331427e-003, 7.032480e-002, -2.234824e-002, -4.501622e-002, -3.724282e-002, -2.764522e-002, -2.629909e-002, -8.262865e-003, -1.882826e-002, -5.221513e-002, -4.083466e-002, -1.105823e-001, -9.001712e-002, 3.900954e-002, -4.463525e-002, 4.115449e-002, -4.655349e-003, -2.001925e-002, -5.923747e-003, -9.794614e-003, -2.846797e-003, 3.145703e-002, 3.706644e-002, -1.279041e-002, 2.411269e-003, 3.081517e-003, 1.974959e-002, -1.205650e-002, -6.289361e-003, -1.964236e-003, -3.401902e-003, 9.809889e-003, 3.932025e-002, 3.862884e-002, 3.535219e-002, -8.576881e-003, 4.312140e-002, 2.706351e-002, 4.341976e-003, -5.852086e-003, 7.145567e-003, 1.026305e-002, 2.822441e-002, 2.643843e-002, 6.965646e-002, -2.561674e-002, 2.969959e-002, 2.117134e-002, 3.341002e-003, 3.884017e-003, 1.012331e-003, 3.707062e-004, 2.235324e-002, 2.797951e-002, 2.160138e-002, 1.134004e-002, -2.657975e-002, -8.590442e-002, 6.287014e-002, 6.287014e-002, -8.590442e-002, 6.254065e-003, -2.120710e-002, 1.118427e-002, -2.843864e-003, -9.974854e-003, 1.429982e-002, 5.667350e-003, 5.598255e-003, -3.426545e-003, -7.210688e-003, 1.992368e-003, -6.750266e-003, -5.631488e-003, -5.631488e-003, -6.750266e-003, -7.955337e-002, 3.132775e-002, 2.759429e-003, -4.817309e-004, -2.680965e-002, -2.865474e-002, -5.116720e-003, -3.880165e-003, -4.634551e-003, -1.610064e-002, -2.813708e-003, 8.061595e-002, 2.700011e-002, 2.700011e-002, 8.061595e-002, -1.160075e-001, -9.985552e-003, 1.541632e-005, 6.806433e-003, 2.611040e-002, -2.723352e-002, -1.072429e-002, -2.369770e-003, -2.991842e-003, 6.388058e-003, -8.729543e-004, 5.900739e-002, -6.056927e-003, -6.056927e-003, 5.900739e-002, -4.050658e-002, -1.532399e-002, -1.245153e-002, -9.583076e-003, 1.296363e-002, -1.876352e-002, -1.094815e-002, -5.361101e-003, 7.472014e-004, 6.153156e-003, -9.149604e-004, -3.907083e-003, -3.769246e-002, -3.769246e-002, -3.907083e-003, -5.386298e-002, -3.644238e-002, 1.507871e-002, -9.259275e-003, -5.089175e-002, 4.176400e-003, 3.858853e-003, 2.102876e-003, -5.229556e-003, -2.151749e-002, 1.801612e-002, 1.884159e-002, 2.543255e-002, 2.543255e-002, 1.884159e-002, 2.179551e-002, 9.253181e-003, 7.500859e-003, -8.361728e-003, -7.293116e-003, -7.166652e-002, -1.629842e-002, -2.705897e-003, -2.603865e-003, -3.462864e-002, -1.444935e-003, -3.956846e-002, 1.613423e-002, 1.613423e-002, -3.956846e-002, 2.003688e-002, -1.667150e-002, -4.456704e-003, 1.156498e-003, -2.448154e-002, -6.458693e-002, -3.170292e-002, -2.107832e-003, 5.285194e-003, -7.311186e-003, 4.958393e-003, -1.735818e-002, -2.085280e-002, -2.085280e-002, -1.735818e-002, -1.411653e-002, -3.285884e-002, -4.186294e-003, 1.392185e-002, -3.859855e-003, -8.851273e-003, -1.929661e-002, -9.107435e-003, -1.060328e-002, -1.380991e-002, -2.319144e-002, 4.273071e-003, 5.943207e-002, 5.943207e-002, 4.273071e-003, -1.099631e-002, 5.836299e-003, 1.936712e-002, -7.826657e-003, -4.169934e-002, 9.234365e-004, -5.341775e-003, 5.740544e-003, -1.004025e-002, 6.716001e-004, -7.641407e-002, 2.740620e-002, 1.159569e-002, 1.159569e-002, 2.740620e-002, 4.771064e-002, 1.528281e-002, 1.526949e-002, -6.950371e-003, -4.080097e-003, 4.881131e-003, 1.188478e-002, -2.635220e-003, -1.797168e-004, 6.067801e-003, 4.982651e-002, -1.159410e-002, 2.364361e-003, 2.364361e-003, -1.159410e-002, 4.000498e-002, -2.088394e-002, -5.277477e-003, -8.894561e-003, 8.451330e-003, -7.822142e-003, -5.023006e-003, -1.142210e-003, -1.689939e-003, 1.026977e-002, -2.292481e-002, 6.041646e-003, 8.311432e-003, 8.311432e-003, 6.041646e-003, -5.437264e-003, -3.107349e-002, -2.328652e-002, 1.159587e-003, -2.532870e-003, 6.706774e-004, -7.935579e-003, -1.252189e-002, 3.619742e-003, 5.329514e-003, 4.768405e-002, 3.901174e-002, -8.812671e-002, -8.812671e-002, 3.901174e-002, -8.680494e-002, -4.093858e-002, 5.378170e-003, -1.304077e-002, -1.107947e-002, -3.066842e-002, 1.345202e-002, 2.061978e-003, 7.871219e-003, 4.262227e-003, 5.241206e-002, 7.584651e-003, -2.013021e-002, -2.013021e-002, 7.584651e-003, 1.813253e-002, -1.230800e-002, -3.359384e-003, 1.168565e-002, 2.789855e-003, -1.040824e-003, 2.354442e-003, 9.334629e-004, 1.213158e-002, 1.558937e-002, 9.758882e-004, -2.423806e-002, 1.496980e-003, 1.496980e-003, -2.423806e-002, -1.113913e-002, -1.962508e-002, -4.418087e-003, -1.888479e-003, 2.139969e-003, -1.248628e-002, -1.160921e-002, -2.830050e-003, 1.743381e-003, 1.859822e-003, -2.123763e-002, 3.951575e-002, -3.489044e-002, -3.489044e-002, 3.951575e-002, -8.857495e-002, 1.295251e-002, -1.217875e-004, -1.547074e-002, -4.713248e-002, -8.205311e-003, 1.790758e-002, 4.570791e-003, -1.053426e-002, 1.621628e-002},
{-4.606436e-004, -6.735623e-004, 6.811585e-003, -8.447075e-003, -1.298894e-002, 1.839526e-002, 2.959433e-003, 2.203321e-003, 1.176562e-002, -2.747859e-002, -4.611522e-003, 2.891580e-003, -4.611522e-003, -2.747859e-002, 1.176562e-002, 2.203321e-003, 2.959433e-003, 1.839526e-002, -1.298894e-002, -8.447075e-003, 6.811585e-003, -6.735623e-004, 1.929159e-003, -2.149818e-004, -1.156613e-003, -1.232334e-002, 2.543989e-002, -2.123695e-002, -4.129840e-004, 2.552591e-002, 7.662693e-003, 5.889178e-002, -4.122066e-002, 2.222475e-002, 2.423590e-003, 3.673075e-002, 3.510888e-002, 2.865154e-002, 6.228119e-002, -1.446914e-002, -1.520928e-003, -2.121753e-002, -1.518278e-002, -4.371247e-003, 7.531316e-003, -1.778175e-002, -2.768843e-002, -2.113825e-002, 8.822694e-002, 2.712130e-003, 4.230314e-002, -3.127607e-003, 4.471682e-002, 5.019087e-003, 1.690994e-002, -1.636221e-002, 6.193949e-002, -2.246594e-002, 5.109779e-002, 1.605189e-002, 1.049804e-002, 1.509094e-002, -3.838307e-002, -1.378661e-002, -


© ISO/IEC 2004 — All rights reserved

Copyright International Organization for Standardization
Provided by IHS under license with ISO
No reproduction or networking permitted without license from IHS
Not for Resale

5.815494e-003, 4.469827e-002, -6.363094e-003, 1.563088e-003, -3.002986e-002, -5.454573e-002, 2.883539e-002, 3.751650e-002, 1.607480e-002, -1.293862e-002, 3.386112e-002, -4.749352e-003, 5.374468e-002, -1.427011e-002, 3.912847e-002, -1.026534e-002, 5.804158e-002, -1.929693e-002, 2.221350e-002, 5.929558e-002, -2.948052e-003, -2.259728e-002, -3.518339e-002, 2.322261e-002, -1.083846e-002, 3.378903e-002, 1.484417e-002, -1.336018e-002, -3.458365e-002, 4.830955e-002, -9.881431e-003, 4.227648e-002, -5.606262e-003, -4.545293e-002, -9.247441e-002, -9.408067e-002, -3.037246e-002, 5.156984e-002, -1.341087e-002, 7.979304e-003, 1.926195e-002, 6.061305e-003, -4.178562e-002, 3.290292e-002, 5.106755e-002, -3.638008e-003, -5.994637e-003, 3.820130e-002, -3.456843e-002, 2.301652e-002, 9.661904e-002, 1.456456e-002, -1.163543e-003, -2.853662e-002, 1.755927e-002, -4.568795e-002, -2.078263e-002, 1.536412e-002, 4.311448e-002, 2.333524e-002, -4.089159e-002, -6.526640e-003, -1.997500e-002, 1.260505e-002, 1.285296e-002, -2.236882e-002, -1.308325e-003, 2.322482e-002, 1.163233e-002, 5.352041e-002, 7.795545e-002, 1.202094e-002, 5.783961e-002, -5.443961e-003, 6.290337e-003, 5.433232e-002, 3.009375e-002, 8.370775e-003, -5.759985e-002, -4.264895e-002, -8.314043e-002, -1.218465e-002, 2.156279e-002, -1.431777e-002, 9.246467e-004, -1.877046e-002, 3.911419e-002, -6.943009e-003, -1.746864e-002, 4.694684e-003, 3.712353e-003, 3.472296e-002, -3.961876e-002, -6.096764e-002, 4.226738e-002, -3.505117e-005, -8.961903e-003, -1.576986e-002, -3.700136e-002, -3.982894e-002, -3.564762e-002, 8.230082e-004, 2.441027e-002, 3.111849e-002, 3.695585e-002, -7.790193e-002, -7.692303e-003, 5.459095e-002, 5.945137e-003, -1.901714e-002, -3.034864e-003, 1.466525e-002, -4.208760e-002, 4.172721e-002, 3.638189e-002, 1.169843e-002, -2.530711e-002, 3.501998e-002, 7.945015e-002, 3.532364e-002, 4.166608e-002, 1.636005e-002, -2.503724e-002, 1.443343e-002, 1.217332e-002, -2.249996e-003, -9.732555e-003, 3.433795e-002, -3.460544e-003, -1.997405e-003, 3.657938e-002, -9.674615e-002, -2.757027e-002, 3.766210e-002, 4.086210e-002, -1.034254e-001, 2.657467e-002, 1.233516e-002, 9.417212e-004, -3.385690e-002, 4.722116e-003, -1.839286e-002, -1.183923e-003, -3.103269e-003, -5.723124e-003, -1.624853e-002, -1.475876e-002, -2.491952e-002, -2.187573e-002, 4.172123e-002, 2.391252e-002, 1.143865e-002, 8.450988e-003, -3.825915e-002, -2.507749e-002, 5.401422e-003, -7.060349e-003, 5.905737e-002, 1.305107e-002, -1.686143e-002, 1.495358e-002, 3.831540e-002, -5.033310e-003, -1.465463e-002, -2.978935e-002, -1.513099e-002, -4.046637e-002, -1.587855e-002, -1.217644e-002, -7.277506e-003, -4.707487e-002, -1.165149e-002, 6.273708e-002, 1.653763e-002, -2.192454e-002, 1.680649e-002, 2.664157e-002, 2.911728e-002, -6.946265e-003, -9.205923e-002, -3.960753e-002, -2.446280e-002, -1.693981e-002, -4.699161e-002, -5.690910e-002, -3.326078e-002, -1.015091e-002, -2.180730e-002, -2.672647e-002, -1.669551e-002, -2.171594e-002, -2.576545e-003, -7.323146e-003, -2.099575e-003, -1.127320e-002, 6.534531e-003, -5.860625e-002, 3.549711e-002, 1.384095e-002, 1.670188e-002, -2.398246e-002, 1.933504e-002, -4.732284e-002, -1.551158e-002, -3.783451e-002, 5.065722e-003, -1.737186e-002, -4.080327e-002, -2.768756e-002, -2.978759e-002, -4.156064e-003, -6.041919e-003, -1.399768e-002, -1.146354e-002, 1.449875e-003, 1.052115e-003, -1.716624e-003, -4.124572e-002, -1.755837e-002, 1.873226e-002, 1.111428e-001, 2.742239e-002, 3.087451e-002, -7.286721e-002, 1.449150e-002, 5.131786e-002, 1.459141e-002, -2.936986e-002, -1.139447e-002, -3.492325e-002, -1.507692e-002, -1.510282e-002, -6.180079e-003, -7.758771e-003, -4.622700e-003, 1.009611e-004, 1.808539e-002, -3.244472e-003, 8.932772e-003, 2.529937e-003, 1.288568e-002, 5.500412e-002, -8.487384e-003, 3.132712e-002, 8.499514e-003, -1.456681e-002, -3.578688e-002, -2.295809e-002, -1.364731e-002, 3.824752e-002, 3.824752e-002, -1.364731e-002, -2.295809e-002, -3.578688e-002, -1.456681e-002, -1.968677e-002, -1.192452e-002, -7.559758e-002, 1.135562e-002, -3.403934e-002, -1.026828e-002, -2.882655e-002, 2.207926e-002, 8.188975e-002, -1.429647e-002, -1.028647e-001, 9.287932e-002, 8.088268e-002, 2.066961e-002, 6.205594e-002, -1.489501e-002, -2.678556e-002, -1.703736e-002, -2.419106e-002, -1.389230e-002, -4.368926e-002, 6.712473e-002, -2.084234e-001, 4.438103e-002, -3.571161e-002, 1.604280e-003, -1.499921e-002, -2.721519e-002, -2.472651e-002, -2.332729e-002, -1.530391e-002, -3.628078e-002, -6.244494e-002, 8.326294e-002, -3.643994e-004, -6.214421e-003, 6.846475e-003, 2.190608e-002, -1.583919e-002, -5.058542e-003, -1.536192e-002, -1.346270e-002, -3.301207e-002, 3.877715e-002, 1.718207e-002, -1.560992e-002, -7.200789e-003, 2.126837e-003, -1.908914e-002, -2.637064e-002, -3.971258e-003, -1.247876e-002, -2.156677e-004, -1.514704e-003, 9.316598e-004, 2.928978e-002, -1.037184e-003, -2.608900e-002, -9.345541e-003, -1.894216e-002, -9.619303e-003, 1.233311e-003, -3.815690e-003, 5.004594e-003, -3.336144e-003, 3.117564e-002, -6.754804e-003, 1.704544e-002, 2.509135e-002, -4.369807e-002, 1.138272e-002, -5.422909e-002, -5.422909e-002, 1.138272e-002, -4.369807e-002, 2.509135e-002, 1.704544e-002, -8.386336e-003, 5.542739e-002, -1.036212e-001, 4.231600e-002, 3.155175e-002, 1.022376e-002, -7.037107e-003, 4.878030e-003, -4.018461e-003, -3.987360e-002, -3.585162e-002, -2.059466e-002, 3.558526e-002, -3.340105e-002, 3.134722e-002, -1.555211e-002, -1.629268e-002, 1.488713e-003, -1.306997e-002, 1.808281e-003, 6.762323e-002, 3.241589e-002, 5.255652e-002, -2.136080e-002, -3.238384e-003, -1.242194e-002, -1.352343e-002, -2.326519e-002, -2.098755e-002, -1.044621e-002, -2.668201e-002, -6.996890e-002, 8.733570e-002, -7.118465e-002, -2.874701e-002, -3.204842e-002, -9.602304e-003, -1.836825e-003, -1.154195e-002, -1.302860e-002, -1.815945e-002, -2.331263e-003, -3.456120e-002, -1.508526e-001, 1.523222e-002, -2.230646e-002, -1.446088e-002, -1.606585e-002, -1.245600e-002, -9.207931e-003, -1.242096e-002, -1.192320e-002,

© ISO/IEC 2004 — All rights reserved


Copyright International Organization for Standardization
Provided by IHS under license with ISO
No reproduction or networking permitted without license from IHS
Not for Resale

1.735077e-002, -3.003605e-002, -4.308584e-003, 6.838308e-002, -2.820623e-003, -2.352068e-003, -7.307148e-003, -1.387202e-002, -4.044428e-003, -1.439505e-002, -6.949468e-003, -2.661992e-004, -2.889483e-002, 2.360100e-002, -1.127820e-002, -3.536099e-004, 1.178240e-002, -3.194128e-002, -7.087375e-003, 1.155036e-002, 1.155036e-002, -7.087375e-003, -3.194128e-002, 1.178240e-002, -3.536099e-004, -3.006660e-002, -2.112637e-003, -5.094957e-002, 3.843235e-002, -2.079758e-002, -1.620928e-003, 5.062458e-003, -1.110777e-001, 1.217795e-002, -9.718775e-002, 6.051327e-002, -8.728897e-002, -1.779384e-003, -5.232219e-002, 5.766242e-002, 1.742918e-003, -1.108887e-003, -6.459053e-003, 8.974715e-002, 1.395697e-001, -4.396343e-002, -1.001106e-001, 4.590372e-002, 9.779514e-002, -4.793866e-002, 8.583637e-003, 8.491954e-003, 1.927183e-003, 1.963459e-002, 9.220652e-003, -5.681417e-003, -2.891020e-003, 1.361375e-001, -1.903695e-003, 5.223412e-002, -2.340083e-002, 7.912902e-003, 6.910245e-003, -2.006688e-003, 3.824758e-003, -8.482744e-003, -5.594327e-004, -3.291545e-003, 5.668852e-002, -6.537233e-002, 4.593011e-002, 3.934044e-002, 2.508381e-003, 4.972859e-003, 6.170403e-003, -1.316485e-002, -1.550616e-002, -5.281017e-003, 1.051870e-002, 2.911580e-002, -5.495244e-002, -8.518636e-004, -8.659018e-004, 1.454325e-003, -7.887483e-003, 1.591905e-003, -9.185649e-004, 1.625957e-003, 2.222650e-003, -1.594278e-002, 2.103297e-002, 9.072843e-003, -8.973301e-003, 2.065249e-002, -2.017692e-002, 1.639843e-003, -6.896357e-003, -6.896357e-003, 1.639843e-003, -2.017692e-002, 2.065249e-002, -8.973301e-003, -4.962050e-002, -2.775745e-002, 6.811653e-003, -8.059056e-002, -4.546801e-002, -1.316805e-002, 1.460129e-002, 2.469496e-002, 7.801883e-002, -1.692637e-002, -7.736478e-002, 3.369438e-002, 7.740727e-002, -2.385117e-002, 8.678068e-002, 3.874166e-002, -1.914108e-002, 1.296848e-003, 3.550196e-002, 4.088259e-002, -9.213563e-004, -7.483827e-003, 3.662160e-002, -7.001608e-002, 4.751833e-002, 7.284551e-003, -6.912270e-003, 2.263849e-003, 1.024554e-002, 3.383194e-002, 9.100901e-003, -4.550410e-002, 3.691699e-002, 5.408149e-003, 2.766465e-002, 1.374046e-002, 1.103223e-003, -3.953999e-003, -5.975325e-003, 1.516727e-002, 1.488477e-004, 1.204832e-002, -7.585241e-003, 9.506268e-003, -7.236336e-002, 4.966177e-002, 1.053905e-002, -8.286529e-003, -1.293540e-002, -6.579119e-003, 6.444852e-003, 7.408298e-003, 6.705726e-003, 8.791894e-003, -1.813660e-002, -4.674411e-002, -2.682234e-002, -1.332444e-002, 5.390868e-003, -6.179428e-003, -1.637302e-002, -5.866556e-003, 1.293119e-002, 2.310792e-003, -4.083051e-003, 2.325998e-002, -6.901141e-002, 1.797775e-002, 5.142524e-002, 5.142524e-002, 1.797775e-002, 7.662377e-002, -8.570248e-003, -4.892576e-003, 4.741746e-003, 4.147343e-003, 2.297750e-002, -7.224637e-003, 1.388334e-002, 6.772562e-004, 3.022138e-003, 2.728657e-002, -1.890059e-002, -1.180586e-002, -1.180586e-002, -1.890059e-002, -6.756291e-002, -2.417582e-002, -5.227477e-003, -3.479220e-003, -2.145230e-002, 1.426305e-003, -5.098510e-003, -3.759064e-003, -4.991993e-003, -5.557046e-003, -1.929266e-002, -3.837302e-002, -1.119642e-002, -1.119642e-002, -3.837302e-002, 1.417523e-002, -1.399876e-002, -2.041522e-003, -6.543753e-003, -3.565487e-002, -5.991743e-002, 9.236251e-005, -1.145838e-003, -8.076548e-003, -2.473463e-002, 2.026358e-002, 2.418570e-003, -2.808120e-002, -2.808120e-002, 2.418570e-003, 1.210555e-002, -7.170341e-003, 1.123086e-002, -1.438010e-002, 3.479667e-002, 5.306673e-004, -1.759578e-002, -1.253364e-003, 4.165051e-005, -2.909128e-002, 6.993502e-002, 6.507749e-002, -3.672029e-002, -3.672029e-002, 6.507749e-002, -3.766718e-002, 2.877876e-002, -1.567576e-002, -9.584875e-003, -2.685042e-003, -6.924783e-003, -1.278556e-003, -7.392156e-003, -7.197007e-003, 7.532681e-004, -1.971068e-002, 7.308095e-002, 1.847520e-002, 1.847520e-002, 7.308095e-002, -1.925733e-002, -5.755003e-003, -1.875348e-002, -8.431848e-003, -2.145493e-002, -1.364543e-002, -6.785188e-003, 1.088504e-003, -9.607765e-003, -2.654542e-002, 6.034395e-002, 5.525894e-002, 8.897367e-003, 8.897367e-003, 5.525894e-002, -4.919033e-002, -5.584100e-003, -2.394327e-003, -9.862937e-003, -3.895233e-003, -3.787666e-002, -2.021724e-002, -7.152993e-003, -2.401871e-003, -8.891850e-003, -6.806967e-002, -4.724987e-003, 3.384957e-002, 3.384957e-002, -4.724987e-003, -4.309988e-002, 2.038707e-002, 1.454514e-003, 2.136271e-002, 9.846234e-005, -2.724932e-002, -1.219743e-002, -1.280673e-003, -8.882944e-003, -6.499298e-003, -1.097769e-003, 2.151735e-002, 2.053542e-002, 2.053542e-002, 2.151735e-002, 7.700156e-002, 2.722938e-002, -3.137622e-003, 4.056308e-002, 5.222929e-002, 2.206339e-002, 5.050297e-003, -4.189152e-003, -1.237843e-002, 5.725768e-003, 2.939508e-002, -7.977643e-002, -1.520320e-002, -1.520320e-002, -7.977643e-002, -1.023001e-002, -5.778946e-002, -9.596316e-003, -1.961795e-002, -4.432313e-003, 5.581005e-002, 7.512002e-003, -1.241824e-004, -4.946386e-003, 1.147735e-002, 1.378264e-002, -7.347140e-002, -1.507252e-002, -1.507252e-002, -7.347140e-002, 1.291548e-002, -1.406544e-002, -1.168526e-002, -1.508611e-003, -5.755866e-002, 4.501220e-002, 1.148231e-002, -5.589385e-003, -1.734621e-003, -1.401582e-002, 5.113389e-002, -5.349155e-002, 7.120863e-002, 7.120863e-002, -5.349155e-002, 1.055750e-001, 7.000485e-002, 3.136366e-002, 1.635628e-002, 5.303027e-002, 2.811458e-002, 1.770569e-002, 4.231876e-003, 3.822059e-003, 1.101884e-002, -5.390883e-003, -3.591728e-002, -3.889934e-002, -3.889934e-002, -3.591728e-002, 1.870094e-002, 8.220928e-003, -3.973131e-003, -5.163803e-003, -3.006140e-002, 1.329428e-002, 2.570275e-003, 1.033871e-003, -3.161844e-003, -5.970857e-003, -3.418463e-002, 8.482227e-002, 2.568669e-002, 2.568669e-002, 8.482227e-002, -6.037975e-002, 2.328496e-002, 2.141983e-002, 2.392776e-002, 2.140460e-002, -8.012496e-003, 4.110225e-003, 9.882549e-003, 2.482300e-003, 1.094367e-002, -3.172048e-002, 5.516756e-003, -4.054091e-003, -4.054091e-003, 5.516756e-003, 3.895826e-002, -


© ISO/IEC 2004 — All rights reserved

Copyright International Organization for Standardization
Provided by IHS under license with ISO
No reproduction or networking permitted without license from IHS
Not for Resale

1.068888e-004, -7.112495e-004, 5.285937e-003, 8.514689e-004, -3.375336e-003, 6.127397e-003, -1.545109e-004, 4.757677e-003, -7.636400e-004, -2.412321e-002, -1.513734e-003, -4.639018e-002, -4.639018e-002, -1.513734e-003, -1.988097e-002, 2.159361e-002, 6.616687e-003, 2.865720e-002, 5.357254e-002, -1.442266e-002, 9.175158e-003, -7.420241e-003, 1.934540e-002, 2.048632e-002}, {-1.147152e-005, 2.964180e-003, -8.022680e-003, 1.281892e-002, -9.659259e-003, -1.319492e-002, 4.044962e-004, 1.699183e-002, -2.012327e-002, -3.627391e-003, 5.065078e-003, 2.303202e-002, 5.065078e-003, -3.627391e-003, -2.012327e-002, 1.699183e-002, 4.044962e-004, -1.319492e-002, -9.659259e-003, 1.281892e-002, -8.022680e-003, 2.964180e-003, 1.532428e-002, -5.329529e-003, 7.689412e-003, 2.816213e-002, -7.103331e-003, 3.270897e-002, 1.197682e-002, -1.014001e-002, -2.847885e-003, -4.017109e-002, -2.889525e-002, -3.408261e-002, -2.604251e-002, -1.432472e-002, 1.274981e-002, 3.105471e-002, -9.967219e-003, -1.291424e-002, 2.780613e-002, -1.359949e-003, 5.426196e-003, 4.786336e-003, -1.378625e-002, -4.180844e-002, -8.433687e-003, 3.105034e-002, 5.152179e-003, 2.206516e-003, -4.290499e-002, -4.671107e-002, 2.742507e-002, -2.183355e-002, 6.216461e-002, -3.291815e-002, -3.029945e-002, -2.814552e-002, 2.692372e-002, -2.429126e-002, -1.358520e-002, 6.175883e-003, -4.514397e-002, 2.181998e-003, 2.704122e-002, 3.881021e-002, 4.495053e-003, -2.255781e-002, -1.668763e-002, -5.099001e-003, 3.023821e-003, -1.474755e-002, 2.073146e-002, -3.740720e-002, -7.882443e-003, 2.491695e-002, 4.764607e-002, 6.538861e-002, 6.212727e-003, -1.234088e-002, 5.830357e-003, -8.462279e-002, -4.538652e-003, -2.911032e-002, 2.846108e-002, -1.691254e-002, 5.018438e-002, -2.219141e-002, -3.431425e-003, -2.120929e-002, 2.800123e-002, 3.304090e-002, -6.208890e-003, 7.964405e-003, -5.718439e-002, -3.581803e-002, 1.971334e-002, 1.193756e-002, 7.556096e-003, 5.304129e-003, 1.759286e-002, 2.107786e-002, 8.089079e-003, -5.820642e-003, -5.498506e-002, 1.714249e-002, 2.693364e-003, -1.887232e-002, 8.430234e-003, -6.815294e-002, 7.377019e-003, -1.704195e-002, 2.155943e-002, -1.091864e-002, 6.906188e-002, -3.870405e-002, -4.757033e-002, -1.110110e-001, 3.015659e-003, -1.342660e-002, 1.333574e-002, 2.541307e-002, 1.029317e-002, 2.013482e-002, -4.404308e-002, -4.557113e-002, -3.244804e-002, -5.502720e-002, -2.481282e-002, 2.099481e-002, -2.636519e-002, -9.795411e-003, -1.935500e-002, -6.133480e-002, 6.093011e-002, -3.933776e-002, 4.493676e-002, 5.579424e-002, -6.394637e-002, 4.320880e-003, -5.106760e-003, 2.200767e-002, 2.706143e-002, -3.237286e-003, -4.096191e-003, 3.544569e-002, 6.843744e-002, 1.685525e-002, 1.875456e-002, -1.494652e-002, -1.301714e-002, -6.477209e-002, 1.426582e-002, -4.369027e-002, -2.287460e-002, 4.187540e-002, 2.087734e-002, -5.044372e-002, 1.923348e-003, 1.202549e-001, -5.175129e-002, 2.883236e-002, 1.853660e-002, 3.312180e-002, 1.753782e-002, 2.248586e-002, 4.122799e-002, 4.586899e-002, -8.110244e-004, -5.029918e-003, -6.495343e-003, 3.511084e-003, -6.168139e-002, -2.643941e-002, -8.878363e-003, 1.985820e-002, 7.135361e-002, -1.557326e-002, -4.076907e-003, -2.929186e-002, -5.266680e-002, -2.404854e-002, 7.700145e-002, 5.027301e-002, 2.958159e-002, 5.246453e-002, 2.005432e-002, 4.240626e-002, 1.803994e-002, 2.938179e-002, -1.673142e-002, -6.308662e-003, 3.745600e-002, 5.113870e-002, 1.162568e-002, -2.882219e-002, 5.339224e-002, -3.849191e-002, -5.791792e-002, -1.167379e-002, -7.993522e-002, -5.893776e-003, -4.465558e-002, 2.034929e-002, 6.116973e-002, 1.050015e-002, 4.048879e-002, 3.361662e-002, 1.152006e-002, 1.821066e-002, 3.112395e-004, -1.093643e-002, -1.477602e-002, 1.243217e-003, -8.828928e-003, 1.634380e-002, 5.629015e-002, 7.472125e-002, -3.786894e-003, -3.644907e-002, -1.148276e-002, 2.079590e-002, -2.014498e-003, 1.565497e-002, -1.401110e-002, 6.270941e-002, 3.102448e-002, 4.060629e-002, 3.783232e-002, 1.756067e-002, 2.077602e-002, 1.685566e-002, 1.049370e-002, -1.540463e-003, 7.678859e-003, 7.662678e-003, 8.031326e-002, 8.064927e-003, -1.532213e-002, 4.140254e-002, -8.813741e-002, -9.765764e-003, -1.349152e-003, -1.634216e-002, 6.632765e-002, 3.954764e-002, 5.057871e-002, 2.920688e-002, 5.775269e-003, -6.462838e-003, 3.220894e-003, 5.644929e-003, 2.862799e-002, 8.607595e-003, -1.538500e-003, 2.674311e-003, 8.257627e-003, -3.847866e-003, -3.367372e-003, 2.187147e-002, 4.754087e-002, 6.392570e-004, -6.254034e-002, -4.270361e-004, -2.519002e-002, 5.796672e-002, -4.383427e-002, -4.852921e-002, 1.897650e-003, 7.943171e-003, -5.397979e-003, -1.876944e-003, 6.920970e-003, 1.105081e-002, 3.663243e-003, 5.645739e-003, 1.685157e-003, 1.476974e-002, -4.335696e-004, 2.471281e-003, 4.303593e-002, -2.643796e-002, -2.854158e-002, 3.027760e-003, -4.803456e-002, 4.129643e-002, 5.569257e-002, -8.415210e-002, -3.583268e-002, -2.671163e-002, 5.025547e-002, 3.494206e-002, -4.119776e-003, -2.717941e-004, -2.183685e-003, 1.101527e-002, 2.769297e-002, -5.403123e-004, 1.195850e-002, 1.947783e-002, 8.239967e-003, -5.229222e-003, 2.453685e-002, 3.407698e-003, 3.958161e-002, -6.550659e-002, -1.160276e-001, -2.245166e-002, -4.565852e-003, -4.688720e-003, 1.170683e-002, -1.368858e-002, 1.373224e-002, -2.566974e-002, -2.566974e-002, 1.373224e-002, -1.368858e-002, 1.170683e-002, -4.688720e-003, 6.469797e-003, -7.047049e-002, -7.706871e-003, 4.417456e-002, -1.659803e-002, 2.634208e-002, 4.923003e-003, 8.756661e-002, 8.847020e-002, 5.848024e-002, -9.210547e-002, -6.099361e-002, 6.559908e-003, 5.843748e-002, -3.050228e-002, -3.109680e-002, 1.196009e-003, 9.730957e-003, 1.924677e-002, 2.844233e-003, 5.056813e-002, -8.117076e-002, 1.365785e-001, 5.789100e-002, -6.173485e-004, -1.389520e-002, -1.044154e-002, 6.262531e-003, -1.712816e-003, -1.753710e-003, 2.645963e-003, 1.929225e-002, 1.008713e-001, -1.324642e-001, -2.381635e-004, -3.212056e-002, 1.675640e-002, 2.323162e-002, 4.116961e-003, -4.392816e-003, -9.256682e-003, -

© ISO/IEC 2004 — All rights reserved


Copyright International Organization for Standardization
Provided by IHS under license with ISO
No reproduction or networking permitted without license from IHS
Not for Resale

1.738200e-003, 7.468365e-003, 4.330810e-002, 3.777380e-002, 5.409799e-002, -1.903201e-002, 2.228464e-002, 2.723482e-002, 1.857012e-002, -1.650117e-004, 2.505995e-003, 1.430488e-002, 2.196831e-002, 1.495207e-002, 4.685500e-003, 2.697353e-002, -3.257625e-003, 9.744533e-003, 1.151261e-002, 1.635156e-002, 2.203049e-003, 3.509357e-003, 1.151689e-002, -5.259281e-003, 3.155102e-002, 6.473330e-003, 4.708081e-003, 3.837311e-002, 1.679536e-003, -8.195311e-003, 4.530317e-002, 4.530317e-002, -8.195311e-003, 1.679536e-003, 3.837311e-002, 4.708081e-003, -1.183548e-002, -6.236415e-002, -4.076109e-003, 1.164170e-001, 6.091285e-002, 4.675101e-002, -7.555839e-003, 8.456285e-002, 7.691617e-002, 1.201899e-002, 1.832282e-002, 3.248359e-002, 2.841018e-002, -4.890939e-002, 1.917836e-002, 2.104038e-002, -6.775573e-003, 2.544867e-002, 4.572671e-002, 4.708347e-002, -4.499545e-002, 2.284735e-002, -3.904866e-003, -2.954644e-002, 3.467508e-002, 1.673900e-002, 7.515927e-003, -4.999685e-005, 1.570389e-002, 1.193008e-002, -4.606692e-002, -2.235947e-002, -1.125266e-001, -8.120904e-002, 3.717916e-003, 1.861527e-002, 2.000714e-002, 7.963215e-003, -2.053705e-003, 1.655018e-002, 5.191495e-003, -6.814656e-003, -4.279915e-002, -1.505883e-002, 4.452975e-002, 2.360098e-002, 9.119673e-003, 1.273812e-002, 2.948975e-003, 5.330082e-003, 3.753017e-003, 6.021003e-003, 2.291289e-002, -2.778937e-002, 2.065190e-002, -2.646744e-003, 5.233921e-003, -2.799879e-003, 3.728918e-003, 4.585615e-003, 2.923115e-003, 7.997871e-003, -3.154565e-003, 2.780068e-003, -3.235272e-002, 2.626752e-003, -2.640885e-003, -1.953694e-003, 1.344529e-002, 2.391441e-002, 3.086191e-002, -2.543069e-002, -2.543069e-002, 3.086191e-002, 2.391441e-002, 1.344529e-002, -1.953694e-003, 8.377802e-003, -5.465902e-002, 6.522482e-003, -1.281089e-002, 5.798965e-002, 2.248387e-002, -3.690809e-002, -9.482825e-002, -1.099109e-001, -2.654526e-002, -1.319845e-002, -1.327430e-002, 1.685320e-002, -2.673542e-002, -1.789303e-002, 2.517587e-002, 1.259202e-002, -5.098536e-002, -6.375991e-002, -2.625425e-002, 1.406033e-001, 6.187809e-002, -2.597073e-002, 2.063145e-002, 4.069296e-002, 1.273808e-002, 3.273117e-003, 7.207705e-003, 8.791284e-005, 8.578862e-003, -2.019301e-003, -1.052840e-001, 8.117310e-003, 1.033733e-002, 5.571822e-002, -4.801825e-003, 1.706120e-002, 1.932540e-002, 1.647044e-002, 1.464562e-003, -1.932227e-002, 3.828690e-003, 3.700401e-003, -6.560083e-002, 7.002543e-002, 2.466337e-002, 6.202186e-003, 1.035113e-003, 1.254346e-002, 1.708237e-002, 1.339141e-004, 6.096976e-003, -2.149209e-003, 5.504937e-003, -3.638788e-002, 1.306632e-002, -3.815017e-003, 2.255214e-002, -8.047949e-003, -2.898959e-003, 6.942499e-004, 3.210565e-003, -1.045988e-002, 3.657742e-003, -3.977756e-003, -9.366672e-003, 7.219357e-004, -1.042188e-002, 9.325230e-003, -3.603727e-002, 1.035155e-002, -5.937314e-002, -5.937314e-002, 1.035155e-002, -3.603727e-002, 9.325230e-003, -1.042188e-002, -7.013736e-002, 1.448563e-002, 7.668861e-002, -1.598131e-001, -5.530362e-002, -1.763817e-002, 3.701972e-002, 4.960892e-002, 8.282053e-003, -7.990420e-002, 6.499475e-002, 8.030997e-002, -9.917270e-002, 3.788431e-002, 3.009940e-002, 4.024532e-002, -2.425584e-003, 3.192275e-002, 2.324305e-002, 6.871980e-003, -2.726481e-002, 9.588010e-002, -3.405559e-002, 6.581981e-002, -9.573716e-002, -1.891353e-002, -1.160183e-002, -3.334261e-003, 7.112802e-003, 5.646172e-003, -5.036389e-003, 7.644113e-002, -3.055174e-002, -4.808546e-002, -4.990733e-002, 7.884107e-003, 1.474835e-002, -4.898549e-004, 6.944959e-003, 9.376193e-003, 1.877540e-004, 2.426543e-002, 6.716467e-002, 1.045324e-001, 5.094154e-002, -1.681050e-002, 2.602070e-003, 5.040410e-003, -1.786599e-003, 2.836241e-003, 5.094221e-003, 1.417846e-002, 3.742226e-002, 3.670135e-002, -2.403899e-002, 2.768353e-002, 7.760380e-003, -1.865923e-003, -4.312751e-003, -5.643796e-003, 3.287216e-003, 7.142718e-003, 1.255714e-002, 1.706321e-002, 1.256556e-002, 1.357758e-002, 1.889401e-002, -2.930645e-002, 4.728830e-002, 4.728830e-002, -2.930645e-002, 1.039093e-001, -3.659889e-004, -4.575982e-002, 2.724194e-003, 4.703970e-003, 5.504567e-002, -1.971988e-002, 1.488072e-002, 2.199344e-003, -5.408029e-003, -3.208248e-002, -8.375193e-002, -3.395582e-002, -3.395582e-002, -8.375193e-002, 1.757717e-002, -2.353723e-002, -5.261558e-003, 3.018856e-003, 5.247254e-003, -6.484899e-002, -1.129658e-002, -5.426739e-004, 7.016444e-004, 1.662921e-003, 5.153322e-002, 2.261916e-002, 7.865047e-003, 7.865047e-003, 2.261916e-002, 6.918284e-002, 9.688646e-003, 1.049334e-002, 7.372665e-003, 1.192749e-002, -2.889013e-002, 4.882637e-003, 5.650127e-003, -3.565618e-003, -7.202141e-003, -5.454132e-003, -4.633865e-002, 4.039163e-002, 4.039163e-002, -4.633865e-002, 1.125992e-001, -2.801512e-002, 1.130373e-003, 1.320411e-003, -4.775375e-002, 5.984687e-002, -9.901367e-003, 5.103700e-003, 4.284621e-003, -3.302954e-002, 2.456246e-002, 3.568091e-002, -4.025661e-002, -4.025661e-002, 3.568091e-002, -8.251093e-002, 9.382101e-003, 9.432762e-003, -1.373866e-002, -1.626381e-002, -3.128842e-002, -3.135876e-003, -1.983161e-003, -8.663539e-003, -2.816285e-003, -1.593984e-002, 8.203733e-002, 3.976132e-002, 3.976132e-002, 8.203733e-002, 1.909305e-002, 3.243607e-002, 1.504474e-002, 1.711547e-002, 2.334086e-003, 2.040685e-002, 8.095236e-003, 1.702591e-002, 6.759578e-003, 1.261352e-002, -3.865047e-002, 5.071110e-002, 1.954902e-002, 1.954902e-002, 5.071110e-002, 4.588393e-002, -8.055463e-005, 6.549809e-003, 1.909089e-002, 1.755741e-002, 8.570844e-003, 1.972399e-002, 3.422544e-003, 4.385905e-003, -2.588212e-003, -9.552867e-004, -3.155384e-002, -4.196735e-002, -4.196735e-002, -3.155384e-002, -4.044786e-002, -6.908646e-003, -3.503382e-003, 3.542035e-002, 2.003038e-002, -1.833182e-002, -6.081493e-003, 3.288075e-003, 5.123393e-003, -1.625485e-002, 3.677272e-003, 5.226511e-002, 1.781087e-002, 1.781087e-002, 5.226511e-002, -3.998270e-002, -3.319357e-002, 3.341444e-003, -


© ISO/IEC 2004 — All rights reserved

--`,,```,,,,````-`-`,,`,,`,`,,`---

Copyright International Organization for Standardization
Provided by IHS under license with ISO
No reproduction or networking permitted without license from IHS
Not for Resale

4.343062e-002, -4.208675e-002, -1.620005e-002, -9.270415e-003, -1.493880e-004, -1.407013e-002, -1.903067e-002, 1.972514e-002, -3.443364e-002, 3.915296e-002, 3.915296e-002, -3.443364e-002, 7.220017e-003, 1.540663e-002, 1.253631e-002, 2.123327e-003, -1.592670e-003, -4.410072e-003, 9.064688e-003, 2.880423e-003, 5.315609e-003, -2.213637e-003, -1.778269e-002, -3.320301e-002, -1.210194e-003, -1.210194e-003, -3.320301e-002, -1.989974e-003, -3.959803e-003, -2.507420e-003, 3.593309e-003, 1.750154e-002, -1.775409e-002, -8.099322e-003, 8.188461e-003, -1.086891e-003, 1.506782e-002, -5.251475e-003, -4.181387e-003, 5.140230e-002, 5.140230e-002, -4.181387e-003, -1.149043e-002, 2.986656e-003, 3.781704e-003, 1.818573e-002, 1.364594e-002, 4.331789e-004, 7.156230e-003, -6.914175e-004, 3.350301e-003, 1.688270e-003, -3.104898e-002, 1.926167e-002, -6.807406e-003, -6.807406e-003, 1.926167e-002, -3.520369e-002, -1.241406e-002, 1.432471e-002, -2.378995e-002, 1.820470e-002, 1.517995e-002, 3.951905e-003, 9.283250e-003, 3.257051e-003, -7.043327e-003, 5.005684e-003, 1.825303e-002, 2.644275e-003, 2.644275e-003, 1.825303e-002, -3.462207e-002, 2.866941e-003, 4.286216e-003, -5.875192e-003, -1.354989e-002, 7.225044e-003, -1.566287e-003, 3.812658e-004, 1.335288e-003, -2.405755e-002, 2.508043e-002, -4.045331e-002, -2.648321e-002, -2.648321e-002, -4.045331e-002, -3.288921e-002, -3.748525e-002, -1.356115e-002, -8.036236e-003, -1.399044e-002, -1.100076e-002, -2.800082e-002, -1.015759e-002, -1.267257e-003, 4.615508e-003, -1.324332e-003, -1.201132e-002, -3.767033e-002, -3.767033e-002, -1.201132e-002, -3.080691e-002, 9.742660e-002, 3.231250e-002, 3.826967e-002, 2.728243e-002, -1.794302e-002, 1.054193e-002, 4.751237e-003, 1.115195e-002, 4.976004e-002},
{3.450647e-003, -2.839451e-003, -2.530448e-004, -1.071826e-002, 9.554835e-004, -3.225489e-003, 4.702181e-003, 7.625169e-003, -4.185170e-003, 1.350818e-002, 7.672691e-003, -1.478547e-002, 7.672691e-003, 1.350818e-002, -4.185170e-003, 7.625169e-003, 4.702181e-003, -3.225489e-003, 9.554835e-004, -1.071826e-002, -2.530448e-004, -2.839451e-003, -6.882563e-003, 1.369148e-002, 2.188107e-002, -6.968413e-003, 3.351713e-003, -3.754599e-004, 4.307055e-003, -3.979180e-002, 2.275829e-002, -3.733758e-002, 4.916485e-002, 3.937780e-002, -5.039891e-002, 7.093697e-002, 2.410877e-002, 2.659837e-002, 2.537929e-002, -9.916750e-003, -6.666000e-003, -1.407805e-002, 1.810100e-002, 1.220844e-002, -1.862467e-002, 1.376436e-002, 3.950758e-004, 1.208933e-002, -9.783149e-003, 1.031909e-002, -4.720658e-002, 2.132082e-002, 3.640646e-002, 4.411375e-003, 3.767034e-002, -3.790274e-003, 4.799377e-005, -2.379850e-002, -2.919142e-002, 2.767992e-003, -5.115060e-002, -4.091218e-002, -3.658447e-003, -4.222769e-002, 1.245032e-002, 2.432670e-002, -5.609383e-003, 1.398741e-002, 2.366243e-002, 6.849136e-002, 4.419562e-003, -3.014521e-003, -2.937325e-002, 3.007881e-002, 2.977306e-002, -8.027292e-003, -3.219877e-003, -3.741695e-002, 4.009635e-002, -2.034301e-002, -1.188026e-002, -9.091483e-004, -3.317576e-002, 4.635652e-002, 7.944073e-003, -1.326083e-003, -7.757670e-003, 1.531929e-002, 4.173770e-002, -7.469557e-003, 3.775740e-002, 5.708578e-002, -8.173953e-005, -4.822309e-002, -4.138815e-002, 2.808102e-002, -4.841355e-002, 5.003805e-002, 6.669025e-002, 2.952129e-002, 2.078477e-002, 1.097720e-002, -1.934339e-002, -2.644487e-003, 2.272264e-002, 2.047471e-002, -4.945061e-003, 5.785589e-003, 4.333349e-002, -5.162130e-003, -6.126084e-002, -7.242187e-003, 3.234162e-002, 1.964537e-002, -9.616957e-003, -1.843605e-002, -5.390363e-002, 1.598078e-002, -1.624344e-002, 3.677760e-002, 3.852082e-002, 3.612995e-002, -3.780742e-002, -1.425431e-001, -5.097777e-002, -4.263379e-002, -5.141107e-002, 3.923536e-002, -3.406842e-002, -4.420459e-002, 3.275080e-003, -1.952196e-003, -5.069522e-002, -3.216381e-002, 5.339070e-003, 3.656806e-002, 4.701976e-002, 7.779237e-002, 5.481507e-002, -2.156910e-004, 3.834864e-002, 4.781929e-003, -2.707405e-002, -6.816106e-002, -5.126646e-003, -3.355020e-002, -3.744415e-002, 2.473425e-002, 4.869975e-002, 7.809362e-002, 2.312276e-003, 2.277187e-002, 2.463096e-002, 3.052306e-002, -2.757016e-003, -2.650586e-002, -1.119849e-002, -2.119607e-002, -7.698859e-003, 4.568800e-003, -7.301778e-002, -5.883749e-002, 3.004402e-002, 2.858741e-002, 1.475250e-002, -3.150073e-002, -1.557043e-003, 1.733884e-002, 3.268043e-002, 9.172827e-002, -4.099639e-002, -5.467687e-002, 3.894782e-003, 1.823680e-002, 6.820801e-003, 1.154762e-001, 6.496224e-002, -6.212963e-002, -1.279539e-002, -1.595149e-002, -7.290056e-003, -4.470143e-002, -3.086792e-002, 3.915395e-002, 5.866662e-002, -3.121590e-003, -2.679348e-003, -6.265468e-003, 6.530043e-003, -2.023376e-002, -2.414499e-002, 2.158922e-003, -4.376374e-002, 3.029580e-002, -8.337824e-002, 8.036878e-004, -4.628631e-002, -2.532423e-002, 1.747703e-002, -3.892378e-002, -3.095390e-003, -5.124526e-002, -3.772147e-002, -3.259313e-003, -4.276563e-002, 1.367532e-002, 1.055730e-002, -3.988501e-003, 1.761113e-002, -2.452638e-003, 1.527671e-002, 3.008535e-002, 3.378507e-002, 5.125156e-002, 2.385500e-002, 6.097908e-002, -3.838557e-002, -2.441027e-002, 2.759224e-002, -6.340912e-003, 1.421026e-002, -7.261402e-002, 7.546161e-002, 1.371122e-001, 2.764352e-002, -1.707974e-001, -1.763126e-002, 7.314543e-003, 1.607401e-002, 8.798054e-003, 6.079248e-003, 1.485490e-002, 3.090599e-003, 5.710399e-003, 1.471024e-002, 1.700730e-002, -1.007826e-002, 2.638169e-002, 2.302140e-002, -5.528988e-002, -2.603278e-002, -2.371947e-002, 5.054381e-003, 4.041393e-002, 2.551489e-002, 2.588391e-002, 3.391513e-002, 1.944484e-003, 2.981484e-002, 1.767839e-003, 1.193167e-002, -5.332035e-003, -1.181444e-002, -5.505501e-003, -6.534276e-003, 2.032421e-002, 1.546852e-002, 2.492264e-002, 1.551276e-002, -6.990895e-004, -6.578760e-002, -5.190965e-002, -1.301111e-002, -8.403508e-002, -2.319523e-002, 5.227881e-002, -1.658983e-002, 7.035226e-002, 5.472012e-002, -2.931390e-002, -3.991777e-002, -2.140518e-002, -

© ISO/IEC 2004 — All rights reserved


Copyright International Organization for Standardization
Provided by IHS under license with ISO
No reproduction or networking permitted without license from IHS
Not for Resale

1.347929e-002, -1.222083e-002, 3.110121e-003, 1.081928e-004, -3.174248e-003, -3.132605e-003, 2.632335e-002, -1.201465e-003, -8.755687e-003, 1.128464e-002, -1.375363e-002, -6.679795e-002, 6.574142e-002, 3.270831e-002, -3.076381e-002, 4.249652e-002, 7.377543e-003, -1.323878e-002, -7.336909e-003, -6.559597e-002, -2.692285e-002, -7.831189e-003, -7.249672e-004, -2.974867e-003, -2.252270e-003, 5.107602e-003, -2.731251e-004, 6.142447e-003, -3.944569e-003, -6.682353e-003, -1.583026e-002, -1.356631e-002, -1.160515e-002, -1.747271e-002, -4.310659e-002, -5.394539e-002, -9.898618e-004, 2.695464e-002, 1.678099e-002, -2.056907e-002, -1.624251e-002, -1.316352e-002, -1.316352e-002, -1.624251e-002, -2.056907e-002, 1.678099e-002, 2.695464e-002, 4.096467e-002, -4.311212e-002, -1.437858e-002, -4.918211e-002, 2.923721e-002, 1.817320e-002, -3.203346e-002, -5.151658e-002, -1.216957e-002, -8.272212e-004, -2.699683e-002, 5.728825e-002, -1.376547e-001, -6.834994e-002, -2.376314e-002, 2.336101e-002, 2.445418e-002, -2.255528e-002, -3.047744e-002, 3.371037e-003, -2.733849e-003, -4.008676e-002, -5.961059e-002, -6.712019e-002, 1.039529e-001, 9.115853e-002, 3.058986e-002, 1.280771e-002, -1.268524e-002, -7.987617e-003, 2.277734e-002, 8.349952e-003, -5.878593e-002, 1.633104e-002, 4.524275e-003, 6.649110e-002, 2.797629e-002, 4.223716e-002, 9.330581e-003, -7.420765e-003, -4.280312e-003, -1.141022e-002, -3.913888e-005, 9.317494e-002, -2.632667e-002, 6.147608e-002, 4.638741e-002, -1.137860e-002, 3.047395e-002, 7.907159e-003, 3.038137e-004, 2.304682e-003, -5.660363e-003, 1.991837e-003, -1.129417e-002, -9.862957e-003, 4.294159e-002, 3.954898e-002, 6.090697e-003, 1.215042e-002, 1.128780e-002, 1.223781e-003, 4.445675e-003, 1.808934e-003, -6.956073e-003, -1.956267e-002, -6.804153e-003, -6.113821e-003, -3.442774e-002, 4.075098e-002, 1.988555e-002, 2.311545e-002, 2.311545e-002, 1.988555e-002, 4.075098e-002, -3.442774e-002, -6.113821e-003, 1.143012e-002, -9.519988e-003, 8.936119e-003, -5.420280e-002, -4.633721e-002, -9.467516e-003, -2.199407e-002, -2.309022e-002, -5.399978e-002, 2.557117e-002, -5.475054e-002, 2.169633e-002, -5.603039e-002, 9.873976e-002, 2.443197e-002, 1.498089e-002, 1.791211e-002, -8.886585e-003, -4.730083e-003, 1.867615e-003, 1.558695e-002, -1.030019e-001, 1.522214e-001, 2.189493e-002, 2.000137e-002, 1.802103e-002, 1.883145e-002, 1.411272e-002, -9.135712e-003, 1.109303e-002, 2.570631e-002, -1.886209e-003, 4.368593e-002, -4.889906e-002, 5.289451e-002, -2.122649e-003, -6.748597e-004, 1.084007e-002, 7.978061e-003, 1.904357e-002, 2.683712e-002, 1.623543e-002, 4.032949e-002, -9.914154e-002, -9.819212e-002, -4.412225e-002, 2.166263e-002, -5.849912e-003, 3.460691e-004, 6.800584e-004, 8.717196e-003, 2.004424e-002, 9.442298e-003, 2.292462e-002, -5.155170e-002, 2.520691e-003, -1.085388e-002, 4.187283e-003, 3.047528e-004, -8.113466e-004, -9.758352e-004, 2.811252e-003, 1.310582e-002, 1.237821e-002, -1.087619e-002, 2.683407e-002, 7.882980e-003, -3.571767e-003, -5.262140e-003, -1.724600e-003, 6.103809e-003, 5.558919e-003, 5.558919e-003, 6.103809e-003, -1.724600e-003, -5.262140e-003, -3.571767e-003, -2.547254e-002, -7.103653e-002, 6.384275e-002, -1.674388e-002, -1.476005e-002, -7.975475e-003, 1.017570e-002, -3.495956e-002, -1.473428e-003, 2.874152e-002, -2.746059e-002, 8.225204e-003, 8.182018e-002, -3.137734e-002, -3.647286e-003, -1.580266e-002, -4.659997e-003, 4.348205e-002, 6.572254e-002, 8.650698e-002, 6.982594e-002, 9.397736e-003, 8.011529e-002, 7.576025e-002, -9.833255e-002, -5.111503e-002, -1.766400e-002, -6.395857e-003, 2.687905e-003, -6.402534e-003, 1.941913e-002, 1.994449e-002, -7.903569e-002, -9.672334e-003, -1.280983e-002, -6.126981e-002, -5.029822e-002, -8.690985e-003, -4.532689e-003, -6.428755e-004, 8.560129e-003, -1.348260e-002, -3.155734e-002, -1.605727e-002, -6.003121e-003, -1.463025e-002, -1.188367e-002, -3.472940e-002, -2.295210e-002, -1.244051e-002, 6.802343e-003, -4.042670e-004, -2.168966e-003, -1.520513e-002, 3.614094e-002, 6.817371e-003, 2.778099e-002, 8.773975e-003, -2.862059e-002, -2.153944e-002, -6.557923e-003, 5.543619e-003, 5.620241e-003, -5.398724e-003, -1.527598e-002, -1.492868e-002, 3.361682e-003, -7.050358e-003, -9.412901e-003, 1.145741e-002, -2.348435e-002, 2.141852e-002, 2.141852e-002, -2.348435e-002, 1.145741e-002, -9.412901e-003, -7.050358e-003, 4.521777e-002, -6.464047e-002, 2.251002e-002, -4.431291e-002, -3.558248e-002, 1.644010e-002, 9.021653e-003, -2.096759e-002, -9.505695e-003, -9.211196e-002, -7.219040e-002, -4.657708e-002, 2.419957e-002, 2.830559e-003, 9.080906e-002, 4.928372e-002, 1.809614e-002, -1.843502e-003, -1.087668e-002, -3.084586e-002, -7.736160e-004, 1.857739e-001, -5.803829e-002, -1.837421e-001, -1.176209e-002, -1.527367e-003, 2.903979e-003, 2.534348e-002, -1.519547e-002, -3.889318e-002, -1.966836e-002, -4.819167e-002, 9.381328e-002, -2.298619e-002, -2.660481e-002, -1.927891e-002, -2.218711e-002, -8.710649e-003, -2.056823e-003, -1.306702e-002, -9.557895e-003, -2.116417e-002, -3.778268e-002, 3.027344e-002, -4.190864e-002, 3.461377e-002, -1.220347e-002, -2.144298e-002, -8.939140e-003, 1.525794e-003, -3.662078e-003, -6.487065e-003, -2.131753e-002, 1.076708e-003, -4.649740e-002, -3.415696e-002, 4.073565e-004, -1.025282e-003, -1.697320e-002, -3.922135e-003, -2.445449e-003, -1.572659e-003, -6.117088e-003, -1.475881e-002, -1.770029e-002, 4.297388e-002, -3.560575e-002, 3.927719e-002, 1.249547e-002, 1.249547e-002, 3.927719e-002, 1.234421e-002, -2.216936e-002, 1.621389e-002, -4.371823e-003, 1.385662e-002, 4.788732e-003, 1.888192e-002, 1.277161e-002, 6.329751e-005, 1.222376e-002, 5.006719e-002, 2.020814e-002, 2.768512e-003, 2.768512e-003, 2.020814e-002, -4.396178e-002, 2.859262e-002, 9.807018e-003, 6.459172e-003, 3.118093e-002, -4.603887e-002, 2.038110e-002, 9.165270e-003, -5.823479e-004, 8.354461e-003, -4.617818e-002, 2.922955e-002, 1.939868e-002, 1.939868e-002, 2.922955e-002, 1.255959e-001, 1.828944e-002, 1.857624e-006, -4.562726e-005, -8.635195e-003, -


© ISO/IEC 2004 — All rights reserved

Copyright International Organization for Standardization
Provided by IHS under license with ISO
No reproduction or networking permitted without license from IHS
Not for Resale

5.315308e-002, 2.421445e-003, 1.853467e-003, 6.042087e-003, -3.202082e-004, 4.607477e-002, 5.181161e-002, -2.606028e-003, -2.606028e-003, 5.181161e-002, -8.008453e-002, 3.347587e-003, 1.069955e-003, -1.963784e-002, 4.072645e-002, -2.635845e-002, -1.892780e-003, 1.984654e-003, 2.789133e-002, -1.608922e-002, -1.106387e-002, -2.609231e-002, -3.640097e-002, -3.640097e-002, -2.609231e-002, -4.163001e-002, -3.498660e-002, 1.413450e-003, -3.720220e-002, -4.149573e-002, 1.817575e-003, 1.620404e-003, 9.055207e-003, -1.631563e-003, 4.485239e-003, -4.387428e-003, -4.867063e-002, -8.845563e-003, -8.845563e-003, -4.867063e-002, -6.079128e-002, 1.744722e-002, -1.187355e-002, -1.149941e-002, -4.412437e-002, 8.044850e-002, 9.406378e-003, 5.844410e-003, -2.847672e-003, 1.048406e-002, -2.075434e-002, -2.103550e-002, -8.224265e-004, -8.224265e-004, -2.103550e-002, -6.959213e-002, 8.316627e-003, 2.924393e-003, 1.342618e-004, 3.042865e-002, 3.998894e-002, 2.966205e-003, 3.372742e-003, 6.337622e-003, 4.691105e-003, 1.405359e-002, 6.569339e-003, -6.763640e-003, -6.763640e-003, 6.569339e-003, -8.889950e-002, -7.701407e-004, -1.402697e-002, -4.856068e-003, -3.849310e-002, -7.231538e-003, 1.409608e-002, 4.364892e-003, 7.587582e-003, 1.146614e-002, 9.136008e-003, -1.917982e-002, 2.739602e-002, 2.739602e-002, -1.917982e-002, 1.649778e-002, 2.178915e-002, -1.073915e-003, 4.279020e-002, 3.508906e-002, 1.155107e-002, 9.465518e-003, 1.307607e-003, 6.888340e-003, 5.563614e-003, 2.678928e-002, 3.543592e-004, -2.016047e-002, -2.016047e-002, 3.543592e-004, -8.040206e-003, -1.013253e-002, -5.327747e-004, -2.519711e-003, 6.427995e-003, 2.407269e-002, -1.703456e-002, 5.727360e-003, 6.685271e-004, -3.899620e-003, 4.906199e-003, 1.086229e-002, 7.931524e-003, 7.931524e-003, 1.086229e-002, 4.698075e-003, 1.276838e-002, 5.649816e-004, 7.464820e-003, 7.159116e-003, 2.333265e-002, -6.044615e-003, -4.127222e-003, 4.698469e-003, -1.478451e-002, -4.085201e-003, 2.997720e-002, 3.050768e-002, 3.050768e-002, 2.997720e-002, -1.606257e-002, 3.224172e-002, 2.587002e-002, -1.347637e-002, 1.693804e-002, -8.327146e-003, -6.310935e-004, -4.070364e-003, -2.361876e-003, 2.210320e-003, 6.959125e-003, 2.052015e-002, -5.795120e-002, -5.795120e-002, 2.052015e-002, 7.773825e-002, -4.562939e-002, -2.489681e-002, 1.957000e-002, 2.917124e-002, -2.672693e-003, -4.719954e-002, -1.582223e-002, 1.141693e-003, -1.213576e-002, -3.500143e-002, -1.216742e-002, 1.655230e-002, 1.655230e-002, -1.216742e-002, 1.689115e-002, 7.415744e-003, 7.778008e-006, -1.108681e-002, -4.030338e-002, -3.922741e-002, 9.724968e-004, -9.322906e-004, -6.388443e-004, -2.326169e-002, 3.021001e-002, 1.555523e-002, -9.360297e-003, -9.360297e-003, 1.555523e-002, -3.051215e-003, -6.338184e-002, -2.083535e-002, -8.406733e-003, -1.075342e-002, -4.007655e-002, -3.051107e-002, -1.493011e-002, -5.535584e-003, -4.243461e-003, -2.766932e-002, 4.438816e-002, -3.446612e-002, -3.446612e-002, 4.438816e-002, 6.995343e-002, -1.754819e-002, 1.940170e-002, -2.201346e-002, -4.546157e-002, -2.102107e-002, -1.742945e-002, 2.429871e-003, -2.538877e-002, -1.392288e-002},
{-2.133057e-004, 7.046224e-004, -1.758763e-003, 6.509067e-003, -5.806678e-003, 5.618011e-003, -1.579574e-002, 2.284129e-002, -8.748301e-003, 1.020023e-002, -8.231315e-005, -2.257845e-003, -8.231315e-005, 1.020023e-002, -8.748301e-003, 2.284129e-002, -1.579574e-002, 5.618011e-003, -5.806678e-003, 6.509067e-003, -1.758763e-003, 7.046224e-004, 3.800777e-003, -1.857106e-002, -1.539136e-002, -2.132290e-002, -5.540757e-003, -1.345415e-002, 1.198716e-002, 1.145311e-004, -2.669765e-002, -1.231344e-002, -1.542084e-003, 5.037847e-002, 1.384490e-002, -3.781890e-002, 6.460156e-002, 1.262939e-002, -1.578133e-002, 2.316103e-002, -1.780505e-002, -2.958600e-002, 1.085245e-002, 5.766288e-004, 3.954678e-003, 1.780290e-002, 1.015305e-002, 1.196744e-002, -1.638413e-002, 9.325694e-004, 1.371878e-002, 6.624306e-002, 1.909636e-002, 1.198317e-002, -1.705932e-003, 2.079465e-002, -4.737414e-002, 1.785133e-002, 3.501707e-002, -1.729200e-002, -4.236171e-003, 2.531055e-002, -4.124128e-002, -1.323481e-002, 8.232754e-003, 2.717142e-003, 2.522051e-003, 1.979457e-002, 3.612278e-002, -3.934115e-002, -2.645135e-002, -2.483121e-002, 2.961801e-002, 4.168076e-002, 3.670782e-002, -2.257454e-002, 6.898864e-002, 1.126660e-002, -7.753204e-002, 6.224158e-002, 2.628941e-003, 4.848538e-002, 4.055704e-002, -3.531062e-003, -2.486643e-002, 1.856643e-002, -4.493995e-003, -2.976054e-002, 1.821691e-002, -4.463999e-003, -6.925165e-003, 7.256765e-003, -1.691114e-002, 3.766431e-002, 1.707431e-002, 2.826226e-002, 2.968738e-002, 1.516780e-002, 5.500071e-002, -1.646150e-002, -7.315838e-002, -8.313116e-002, 1.903274e-002, -3.111070e-002, 1.957925e-002, 2.479874e-002, -3.687257e-002, -2.730323e-002, -2.563486e-002, 4.396851e-003, -2.829356e-002, 5.270629e-002, 7.596178e-002, 4.484612e-002, 5.026853e-003, 4.759354e-002, 2.410871e-002, 8.385786e-003, 4.360965e-002, 2.401523e-002, 1.507164e-003, -6.545928e-002, -6.714987e-002, -1.384721e-002, 8.910449e-002, 3.692572e-002, 4.810790e-002, 4.703179e-002, -2.579018e-002, 8.152925e-003, 2.808801e-002, -4.614551e-002, 1.473123e-002, -5.636830e-002, 9.108908e-002, 9.998224e-003, -1.245749e-002, 1.937166e-002, 4.296915e-002, 6.437251e-002, 2.458376e-002, -3.759659e-002, -4.740695e-002, 7.775827e-003, 1.893234e-002, 2.900251e-003, -2.501316e-002, 2.052619e-002, 8.751616e-003, -1.557029e-002, 2.682144e-002, 2.524305e-002, 4.393382e-002, 2.712194e-002, 3.096175e-002, -2.477700e-002, -1.340022e-003, -8.176442e-002, -2.085598e-002, 4.366794e-002, 2.324205e-002, 4.883662e-002, -1.701861e-002, -8.724164e-002, -2.370066e-002, -2.884589e-002, 1.171461e-002, 2.241316e-003, -1.910146e-002, -7.597339e-002, 6.784188e-003, 4.762438e-002, 7.704686e-003, -2.048984e-002, -3.108958e-002, -5.370759e-002, -6.572148e-002, -1.382472e-002, 5.000026e-002, -6.128468e-002, -7.826053e-002, -1.822055e-002, 3.912549e-002, -2.691195e-002, -

© ISO/IEC 2004 — All rights reserved


Copyright International Organization for Standardization
Provided by IHS under license with ISO
No reproduction or networking permitted without license from IHS
Not for Resale

9.819638e-002, 2.204030e-003, -4.035690e-002, -5.040421e-003, -9.317157e-003, -4.410830e-002, -1.123547e-002, -4.913021e-002, 2.426016e-002, 4.946234e-002, -1.503377e-002, 5.493624e-003, -1.525332e-002, 5.265169e-002, -2.040094e-002, 3.880080e-002, 4.305741e-002, -4.861613e-003, -1.026863e-001, 1.377826e-002, -6.166094e-002, -1.347145e-002, 2.042269e-002, -1.187821e-002, -1.221488e-002, -2.161343e-002, -3.182612e-002, -2.348143e-002, -3.765131e-002, -4.288569e-002, -5.738792e-002, 2.169527e-002, 5.778036e-002, 9.103580e-003, 1.777608e-002, 2.629329e-002, -4.730207e-002, 1.323711e-002, 8.041691e-002, 6.651205e-002, 6.313516e-002, 2.932482e-002, -4.357720e-002, 3.204634e-002, 9.005771e-003, 2.789041e-002, 1.694413e-002, -1.497540e-002, -3.297970e-002, -2.943665e-002, -1.801192e-002, -1.262191e-002, 4.703332e-003, 1.543028e-002, 7.502052e-002, 2.849958e-002, 4.876406e-002, -3.618001e-003, -2.725744e-002, 9.274871e-003, 5.687526e-002, 6.086509e-004, -6.581110e-002, 2.462552e-003, -8.374162e-003, 1.047200e-002, 4.307455e-003, 9.127582e-003, -3.178921e-003, -1.897507e-002, -2.123597e-002, -1.533224e-002, -3.188436e-002, -2.891777e-002, -2.398103e-003, 3.187834e-004, -6.174602e-002, 2.738603e-002, -1.074957e-002, 1.358859e-003, 4.734902e-002, 2.443666e-002, -3.160823e-002, -4.169813e-002, -3.804727e-002, 1.160556e-002, 1.384414e-003, -8.950661e-003, -7.705521e-003, -2.543556e-002, -9.852790e-003, -1.739080e-002, -3.567388e-002, -3.164717e-002, -1.048250e-002, -1.180580e-002, -2.388376e-003, 2.447056e-003, -3.054852e-002, 8.667224e-003, 1.974400e-003, 2.992207e-002, -4.218993e-002, -2.466917e-002, -1.117212e-002, 3.011805e-002, 3.297660e-002, -6.933941e-003, -1.320050e-002, -2.819339e-002, -1.005331e-002, -1.127779e-002, -3.290585e-003, -1.561996e-002, -2.035920e-002, -2.574821e-002, -1.201882e-002, 4.727244e-003, -1.484636e-003, 2.000923e-003, 2.115875e-002, -8.864854e-003, -5.693814e-002, 4.385898e-002, 5.181158e-003, -8.707589e-003, -3.634715e-002, 1.171369e-002, -1.766888e-002, -1.987797e-002, -1.987797e-002, -1.766888e-002, 1.171369e-002, -3.634715e-002, -8.707589e-003, 6.131323e-003, -1.914249e-002, -5.593909e-002, 3.723629e-002, 3.037061e-002, -1.555326e-002, -1.360098e-002, -3.505466e-002, -8.033908e-002, -4.051350e-002, -5.811889e-002, -9.235165e-002, 6.014946e-002, -4.151305e-002, -2.186039e-003, 1.645205e-004, 2.283622e-002, -3.393685e-002, -3.061135e-002, -3.057630e-002, 8.668294e-002, 2.260189e-002, 4.222671e-002, -6.417210e-002, 1.370968e-002, 8.756738e-003, 1.272816e-002, -2.602955e-002, -1.852728e-002, -2.484103e-002, -1.249966e-002, -1.201501e-002, 1.485616e-001, 8.892820e-002, 6.362827e-002, -2.122912e-002, 2.622031e-002, -7.669181e-003, -1.413913e-002, -1.024895e-002, -4.672701e-003, -7.080974e-003, -4.629393e-003, -2.587707e-002, 6.387967e-002, 2.407065e-002, 2.329490e-002, -2.813280e-003, 2.906251e-003, 5.860867e-003, -3.665857e-003, -5.267617e-003, -8.451711e-003, 1.794395e-002, -5.592122e-002, 1.426478e-002, -9.274506e-003, 6.746994e-003, -8.418903e-003, -7.434791e-003, 1.452902e-003, -3.301168e-003, -8.648643e-003, 4.373816e-004, -2.449328e-003, 1.959678e-002, -6.494115e-003, -7.850584e-003, 1.765983e-002, -1.068985e-002, 6.001576e-003, 3.441631e-002, 3.441631e-002, 6.001576e-003, -1.068985e-002, 1.765983e-002, -7.850584e-003, -3.343207e-002, 7.347954e-002, 3.395168e-002, 5.340836e-003, -2.759311e-002, -6.297853e-002, -6.237536e-002, -6.564371e-002, 1.147087e-001, -1.029919e-002, 5.199449e-003, 9.157802e-002, 3.255068e-002, 2.650635e-002, 1.747890e-002, -1.391720e-002, 4.696281e-003, 1.376758e-002, 7.389494e-002, 4.567133e-002, -4.637826e-002, -1.563608e-002, -4.565103e-002, 1.577409e-001, -3.434933e-002, -3.312713e-003, -2.030449e-002, -1.537447e-002, -1.047078e-002, 9.693939e-004, 1.825199e-002, -2.899061e-002, -5.575699e-002, -3.691176e-002, -3.851904e-002, 1.486385e-002, -9.228167e-003, -2.228170e-002, -1.273972e-002, -1.080066e-002, -2.847987e-002, 1.677119e-002, -1.258184e-002, 8.149424e-002, -1.767203e-002, -4.518176e-002, 6.899082e-003, -4.727739e-003, -5.220857e-003, -5.158107e-003, -2.302130e-002, -2.644300e-002, -2.597627e-003, 8.593598e-003, 1.638965e-002, -4.587273e-003, 2.478788e-002, -2.494133e-002, -8.560340e-003, -8.569630e-003, -5.065112e-003, -2.162010e-002, -1.458196e-002, -1.145953e-002, 2.241478e-003, 1.457260e-002, -7.201944e-003, 1.102840e-002, -1.558984e-002, -1.962808e-003, -1.276154e-002, 3.926596e-003, 3.926596e-003, -1.276154e-002, -1.962808e-003, -1.558984e-002, 1.102840e-002, 8.721128e-003, 1.288614e-002, 9.009833e-002, 4.255134e-002, 1.325622e-002, 1.880209e-002, -2.605441e-003, 6.532006e-002, -7.587637e-002, -7.469015e-002, 4.530836e-002, 7.994627e-002, 4.770379e-002, 1.226376e-003, 1.655710e-002, -1.419826e-002, 8.991387e-003, -1.045946e-002, 6.541691e-003, 4.678712e-002, 3.468509e-002, -1.012379e-001, 5.461799e-002, -4.051951e-002, -4.699976e-002, -2.619341e-002, -1.182895e-002, -1.328142e-002, -1.313541e-003, -2.383132e-002, -1.925196e-002, 2.351445e-002, -8.459306e-002, 2.124468e-003, -5.984049e-003, -2.290821e-002, 7.276345e-003, -1.999400e-002, -1.512597e-002, -1.571755e-003, 1.582484e-003, 2.159220e-002, 2.474720e-002, -1.984939e-002, 3.295175e-002, 2.772309e-002, 2.913710e-002, -1.176418e-002, 6.394642e-003, 6.426751e-003, -1.360130e-002, -6.348012e-003, 1.433593e-002, 3.246199e-002, 1.353700e-002, 4.359044e-002, -2.836977e-003, -1.222807e-003, -3.471875e-003, -8.491038e-003, -2.787738e-003, -7.026134e-003, -1.079166e-002, 1.301840e-003, 9.569580e-003, 1.383517e-002, 8.301594e-003, 1.010816e-002, -4.897338e-003, 2.449528e-002, 1.051509e-002, -4.103956e-002, -4.103956e-002, 1.051509e-002, 2.449528e-002, -4.897338e-003, 1.010816e-002, 2.839682e-002, 2.457845e-002, -4.694262e-002, -5.693462e-002, -5.030777e-002, -1.994945e-003, -2.269954e-002, -1.427013e-002, 3.955726e-002, 2.081258e-002, -5.143779e-002, -8.864152e-002, 4.347524e-003, 7.070225e-002, 3.193607e-002, 9.529411e-003, -1.862235e-002, -2.621843e-002, -


© ISO/IEC 2004 — All rights reserved

Copyright International Organization for Standardization
Provided by IHS under license with ISO
No reproduction or networking permitted without license from IHS
Not for Resale

3.013372e-002, -4.864795e-002, -4.169736e-002, -9.978435e-002, -1.271590e-001, 2.592679e-002, -7.006639e-003, 1.899818e-002, 3.341419e-003, -1.133081e-002, -1.654414e-002, -2.190212e-002, -3.668822e-002, -2.386878e-002, -6.260565e-003, 9.458098e-002, -5.769921e-002, -2.202918e-003, 2.914551e-003, -5.302400e-003, -1.141739e-002, -9.133622e-003, -3.031138e-002, -1.160880e-002, -6.805609e-003, -3.158746e-002, 1.746850e-002, -2.886697e-002, 2.270149e-002, 1.021528e-002, 6.742839e-004, 7.648236e-003, -1.305540e-002, -1.178948e-002, -8.907602e-003, 2.193433e-002, 4.290563e-004, 5.035595e-003, -1.875863e-003, -1.264422e-002, 3.129562e-003, -4.738286e-003, -6.858070e-003, -1.001957e-002, -5.777386e-003, 3.283784e-003, -8.171305e-003, -2.750796e-002, -4.326850e-002, 7.107263e-002, 7.248639e-002, 7.248639e-002, 7.107263e-002, 9.368052e-002, -7.187186e-002, -1.818664e-002, -2.101803e-002, -5.058121e-002, 4.233740e-002, -3.254131e-002, -1.202781e-003, -3.378825e-003, -9.493433e-003, 3.137671e-002, 1.039800e-001, 3.608223e-002, 3.608223e-002, 1.039800e-001, -1.082434e-001, 6.245238e-002, 2.632618e-002, 1.707877e-002, 4.718337e-002, -4.716434e-003, 1.648130e-002, 9.372305e-003, 2.267017e-003, 1.359330e-002, -3.124360e-002, -8.252668e-002, -2.499327e-002, -2.499327e-002, -8.252668e-002, 2.603168e-002, -8.954746e-003, -6.293737e-003, -1.314887e-002, -4.775535e-002, -2.485042e-002, 2.977839e-003, -2.397367e-004, -8.254558e-003, -2.020406e-002, 3.797119e-002, -4.486205e-002, -8.339350e-002, -8.339350e-002, -4.486205e-002, -2.429445e-002, 2.562304e-002, -3.406155e-004, 1.808815e-002, 1.245637e-002, -2.949149e-002, 1.521106e-003, -2.518067e-003, -6.226313e-003, 7.291786e-003, -1.477186e-002, 9.827040e-002, -4.757376e-002, -4.757376e-002, 9.827040e-002, -4.092279e-002, 6.064755e-003, 1.422782e-002, -2.867308e-002, -1.439563e-002, 8.350314e-004, 2.644793e-003, 4.114626e-003, -1.085190e-002, -6.090965e-003, 3.184481e-002, 4.189255e-002, 8.190846e-003, 8.190846e-003, 4.189255e-002, -8.520300e-003, -6.808958e-003, 1.220863e-002, 8.323073e-003, 6.738884e-002, 1.234084e-002, 1.720617e-002, 1.139446e-003, -1.561363e-003, -1.135314e-002, 5.037624e-003, 6.971542e-002, 1.023773e-002, 1.023773e-002, 6.971542e-002, 2.113435e-002, 5.309436e-002, 1.403265e-002, 4.108744e-004, -3.833396e-003, 3.299799e-002, -8.692444e-003, -8.113707e-003, 1.234175e-003, 1.464515e-002, -1.825933e-002, 4.238270e-003, 1.603631e-002, 1.603631e-002, 4.238270e-003, -3.492627e-002, -1.004984e-002, -8.630864e-003, 9.472382e-003, 1.798045e-002, -2.991235e-002, -1.089208e-002, -6.894017e-003, -1.324766e-003, -4.321269e-003, 1.831755e-002, -4.843760e-003, 7.260145e-003, 7.260145e-003, -4.843760e-003, -1.027652e-001, -3.406313e-002, -5.505511e-003, -1.345906e-002, -6.260745e-002, -3.527591e-002, -2.275365e-002, -7.843792e-003, -8.153298e-003, -9.074052e-003, -4.615542e-003, 3.799590e-002, 1.814788e-002, 1.814788e-002, 3.799590e-002, 5.684981e-002, -8.508272e-004, -8.860964e-004, 2.185621e-003, 3.181870e-003, -7.766422e-003, -9.581179e-004, -8.890803e-003, -1.832791e-003, 4.642085e-003, -5.065119e-002, -6.470071e-002, -8.496971e-003, -8.496971e-003, -6.470071e-002, 1.825461e-002, -6.519460e-003, 6.061010e-004, -9.385759e-003, -9.121785e-004, -1.128123e-002, -2.406496e-003, 1.680538e-003, -1.123335e-002, -8.873275e-003, -6.302036e-003, -1.872424e-002, -4.304432e-002, -4.304432e-002, -1.872424e-002, -9.250986e-002, -4.442999e-002, -8.645126e-003, -8.555092e-003, -3.086450e-002, -2.097479e-002, -7.102821e-003, -1.088972e-002, -5.740125e-003, -9.068066e-003, 3.963694e-004, -4.432542e-003, 1.893577e-002, 1.893577e-002, -4.432542e-003, 4.851181e-002, -3.032190e-002, 2.839391e-003, 9.682326e-005, -3.518048e-002, -1.686010e-002, -1.356817e-002, -1.824648e-003, 1.136029e-003, 1.677682e-004, -2.130032e-002, -1.639494e-002, 2.860477e-004, 2.860477e-004, -1.639494e-002, -7.523497e-002, 7.770250e-003, 6.176254e-003, 1.452946e-002, 1.992203e-002, 8.421764e-004, -3.765977e-003, 3.643866e-003, 4.677961e-003, 1.089844e-002, 4.903838e-002, -2.924861e-002, 5.546125e-003, 5.546125e-003, -2.924861e-002, -9.583906e-002, 3.549170e-002, 1.482764e-002, -1.152771e-003, -1.420849e-003, -4.195339e-003, -1.683373e-003, -5.141075e-003, -3.568393e-003, -8.899371e-003, 1.621643e-002, 5.784226e-002, 2.902154e-002, 2.902154e-002, 5.784226e-002, -6.203407e-003, 3.353394e-002, 1.840096e-002, -6.928400e-003, -9.379273e-003, 2.476681e-002, 1.202487e-002, -1.561273e-003, -1.652920e-002, 1.221157e-002},
{-8.625133e-005, -3.090493e-003, -1.368898e-003, 4.259851e-003, 1.371543e-002, -9.830888e-003, 7.291116e-004, -1.142357e-003, -1.287896e-003, -1.471037e-002, 1.489597e-002, 3.644633e-003, 1.489597e-002, -1.471037e-002, -1.287896e-003, -1.142357e-003, 7.291116e-004, -9.830888e-003, 1.371543e-002, 4.259851e-003, -1.368898e-003, -3.090493e-003, 2.457559e-003, -3.092689e-003, -1.989216e-004, -1.296232e-002, -2.470432e-002, -1.182748e-002, -2.884628e-002, 2.971037e-002, -3.474842e-002, 6.809849e-002, -1.163979e-002, 3.435394e-002, 5.916477e-002, 4.212259e-002, 7.538106e-004, 2.615174e-002, -1.347867e-002, -1.252543e-002, 1.324345e-002, -1.816007e-002, -7.287364e-003, 8.319218e-003, 4.148650e-003, -4.458594e-003, -2.791440e-003, -1.039670e-002, -4.124185e-002, 2.221750e-002, 3.217562e-002, 4.190017e-002, 1.882210e-002, 4.220960e-002, 9.135533e-003, 1.918374e-002, 7.515722e-002, -1.937983e-002, -9.404880e-003, 4.369469e-003, 9.023582e-003, -1.132701e-004, 5.839627e-004, -1.521572e-002, 2.579615e-002, -3.080400e-002, 2.377332e-002, 1.715458e-002, -2.875486e-002, 8.542111e-003, 1.655152e-002, 5.441480e-002, -3.607917e-002, 1.088384e-003, -1.670516e-003, -4.583104e-002, -2.671573e-003, -2.252820e-002, 5.921962e-002, -2.333950e-002, -9.380575e-003, 2.037339e-002, 4.827784e-002, 3.743516e-002, -2.045716e-002, 2.473928e-002, -1.859724e-002, 7.195551e-003, 2.978438e-003, 1.067138e-002, -6.321859e-002, -1.454804e-002, 3.081514e-002, 4.206346e-002, -7.226837e-003, -1.409915e-003, -

© ISO/IEC 2004 — All rights reserved


Copyright International Organization for Standardization
Provided by IHS under license with ISO
No reproduction or networking permitted without license from IHS
Not for Resale

4.337449e-002, -3.801397e-004, -5.240844e-003, 5.769665e-002, 7.999533e-002, 8.064365e-003, -1.867569e-002, -6.397178e-003, 2.052997e-002, 2.221916e-003, 4.170154e-002, -2.498253e-002, -2.074377e-002, -9.333684e-003, 1.901752e-002, -3.904412e-002, 1.729287e-002, -6.720678e-002, 7.849164e-003, 1.471670e-002, 1.444545e-002, -3.497997e-002, 2.046677e-002, -2.780817e-002, -2.771087e-002, -4.810060e-002, -5.296406e-003, 6.266204e-002, 5.050708e-002, -6.852756e-002, 1.029202e-002, 6.481666e-002, 1.806451e-002, -1.355367e-003, 2.672715e-002, -2.459043e-002, -2.517111e-002, 2.661898e-002, -4.377869e-002, -5.984949e-002, -7.695718e-002, 2.265316e-002, 3.626692e-002, 2.175698e-002, -5.884504e-003, -8.320268e-004, -2.668335e-002, 1.552065e-003, -1.333899e-002, 2.076082e-002, 1.638986e-002, 2.484943e-002, 3.449156e-002, 3.095436e-002, 1.214489e-002, 3.884569e-002, 1.645864e-002, -5.276515e-002, 5.247845e-002, -5.091471e-002, 4.664317e-002, 5.062064e-003, 2.175195e-002, -1.995447e-002, 1.741991e-002, -9.060414e-002, 2.415827e-002, -4.665936e-002, -1.584275e-002, 1.926671e-002, 1.308857e-002, 3.460298e-002, 4.930428e-002, -2.562864e-002, 3.433346e-002, 2.618356e-002, -2.613622e-002, 4.920253e-003, -8.344103e-002, 2.025260e-003, 1.061683e-002, -7.122176e-002, 8.577463e-002, 5.161101e-002, -3.284733e-002, -5.094587e-002, -1.603534e-002, 3.921902e-002, -3.497932e-002, -2.498520e-002, 5.078753e-003, 3.379073e-002, 2.865965e-002, 2.637511e-002, 3.090217e-002, -2.185782e-002, -5.047733e-003, -3.045935e-002, 2.625719e-002, -2.416889e-002, -2.385562e-002, 4.107014e-002, -1.063630e-001, 1.877140e-002, 4.138123e-002, 6.991066e-002, 8.557713e-002, 7.332075e-002, 1.140231e-004, 5.765919e-003, -1.850078e-002, 2.534069e-002, 1.691803e-002, 7.411128e-003, 2.844789e-002, 1.783581e-003, 2.043119e-003, -2.251403e-003, -6.472271e-002, -5.833266e-002, -8.350025e-003, -2.046003e-002, -2.315187e-002, 3.781900e-002, -2.485853e-002, -7.485800e-002, -4.226062e-002, 1.586391e-002, -4.336661e-002, 5.007000e-002, 1.848217e-002, 2.607459e-002, 6.630738e-003, 2.168342e-002, -4.878664e-003, 1.852692e-002, 2.104874e-002, -1.486223e-002, -1.846188e-002, -2.584301e-002, -2.793077e-002, 2.310555e-002, -1.957021e-003, -8.209649e-002, -7.928595e-002, -1.062791e-002, -4.276045e-002, -3.257388e-002, -1.210353e-002, -2.850188e-002, 2.025589e-002, 2.626294e-002, 3.264282e-002, 1.311982e-002, -5.412109e-003, -5.194039e-003, -8.434636e-003, -9.217644e-003, -1.577213e-002, -2.449314e-003, -1.598239e-002, -1.155134e-002, -7.276185e-003, -4.615936e-003, 2.582889e-002, 6.334444e-002, -2.249037e-002, 1.282573e-002, -5.203053e-002, 1.691461e-002, -1.007467e-001, 4.388691e-002, 2.510640e-002, 2.277528e-003, -1.864987e-002, -1.553497e-002, -9.105055e-005, 2.332006e-003, 8.458597e-004, -3.396451e-003, -2.821056e-003, -2.335739e-002, -1.442484e-002, -2.744481e-002, 5.390457e-003, 2.982272e-002, -5.447578e-003, -4.658005e-002, -1.120158e-002, -5.226344e-002, 3.411402e-002, -2.766666e-002, -6.924109e-002, 9.581733e-003, 3.060916e-003, -1.999020e-003, 4.243859e-003, -2.743971e-003, -1.534005e-002, 9.706319e-004, -1.125283e-003, -2.355810e-003, -9.579074e-003, 9.468313e-004, -7.428476e-003, -1.232718e-002, 7.455922e-003, -5.807086e-003, 2.623445e-003, 4.565026e-002, -1.556805e-002, -5.708437e-002, 1.200291e-002, -1.297434e-002, 1.019031e-002, 2.161077e-003, 8.582124e-003, -2.626779e-002, -2.626779e-002, 8.582124e-003, 2.161077e-003, 1.019031e-002, -1.297434e-002, 4.675316e-002, 2.645931e-002, 5.217820e-002, -9.263282e-002, 1.139120e-002, 5.815613e-002, 2.098545e-002, 3.564389e-002, -2.365197e-002, -2.843907e-002, -5.789492e-002, -4.605675e-003, -2.523915e-002, -5.284602e-003, -6.330554e-002, -7.271411e-002, -8.224157e-002, -2.850202e-002, -1.757273e-002, -1.494410e-002, -3.630196e-002, 1.007024e-001, 6.530378e-003, -7.578812e-002, -5.916436e-003, -1.307644e-002, -1.924516e-002, -1.133575e-002, -1.632880e-002, -1.593323e-002, -7.046832e-003, 1.048543e-002, 3.687427e-002, -8.135079e-002, 4.902534e-002, 1.568791e-003, -7.192171e-003, -1.308097e-002, -1.163306e-002, -8.157101e-003, -8.863087e-003, -8.268064e-003, -1.372973e-002, -3.148069e-002, 1.242269e-002, 7.823129e-002, 5.402902e-003, 1.759994e-002, 1.717248e-002, 6.552783e-004, -4.141294e-003, -2.896684e-004, -1.101767e-002, -2.720893e-002, 3.142421e-002, 2.139370e-003, 1.820022e-002, -3.832079e-003, 2.763539e-003, 3.147693e-003, 7.324783e-003, -5.868009e-003, -6.859081e-003, -1.270344e-002, -1.629240e-002, 2.004791e-002, -2.372372e-002, -3.077049e-003, 2.217733e-002, -1.230322e-002, -1.170754e-002, -1.237511e-002, -1.237511e-002, -1.170754e-002, -1.230322e-002, 2.217733e-002, -3.077049e-003, -6.416414e-002, -1.218140e-002, 1.503663e-001, 1.564531e-001, 9.034643e-003, -2.013247e-003, 2.385967e-002, 2.111052e-002, 2.703555e-002, -5.932833e-002, 4.029604e-002, -2.177933e-002, -1.045067e-001, 3.228822e-002, 1.466461e-002, -4.280562e-002, -1.786737e-002, -2.334703e-002, -5.961985e-002, -5.777117e-002, -9.052712e-002, 7.548016e-002, 4.398096e-002, -2.344517e-002, -8.215384e-003, -8.344747e-003, -6.272787e-003, -1.010672e-002, 5.071583e-004, 1.121401e-002, 4.272519e-002, -6.348634e-003, 7.408053e-002, 3.109653e-002, 3.118790e-002, -4.309032e-003, 2.754558e-004, 6.708155e-003, 2.644022e-003, 2.115749e-002, 1.974306e-002, 8.262909e-003, 3.535298e-002, -8.614344e-003, 1.605015e-001, 2.111959e-002, -4.561206e-003, 4.342341e-003, -6.274754e-004, 1.938047e-003, 1.696428e-002, 5.419591e-003, 7.809803e-003, 7.231339e-003, 4.176894e-002, 2.650063e-002, 1.717420e-002, 1.050693e-002, -2.502248e-003, -6.839248e-003, -1.309304e-003, -1.094390e-003, -4.305011e-003, 1.710392e-002, 1.963439e-002, 2.307609e-004, -2.916760e-003, 1.873052e-002, 3.744877e-002, -1.122521e-002, 2.062756e-002, -1.136724e-003, -1.136724e-003, 2.062756e-002, -1.122521e-002, 3.744877e-002, 1.873052e-002, 2.478323e-002, 2.995772e-002, 1.150183e-001, 6.140319e-002, -1.134439e-002, -3.600198e-002, -3.587823e-002, -


© ISO/IEC 2004 — All rights reserved

Copyright International Organization for Standardization
Provided by IHS under license with ISO
No reproduction or networking permitted without license from IHS
Not for Resale

4.162405e-002, 2.216785e-002, -1.258966e-002, -5.796536e-002, 8.476877e-002, 2.416858e-002, -1.720948e-001, 1.070817e-002, 7.421685e-003, -6.958816e-003, 3.414726e-002, 4.525442e-002, 6.155748e-002, -6.661116e-002, -1.549782e-002, -8.305207e-002, 8.767891e-002, -1.098323e-001, -3.370887e-002, -1.537566e-002, -1.972842e-002, 3.125372e-003, 4.981938e-004, -3.023028e-002, -8.070954e-002, -3.035415e-002, -2.150750e-002, 5.519706e-002, -1.558707e-002, -3.781185e-002, -1.061932e-002, -1.603827e-003, 1.441959e-002, -3.684211e-003, -1.317320e-002, -2.180406e-002, -1.556768e-003, -8.429511e-002, -3.178858e-002, -1.821728e-002, -1.538967e-002, -4.954630e-003, -2.694476e-003, -4.889060e-004, -1.031635e-002, -1.779069e-002, -2.536777e-002, -3.776503e-002, -3.312201e-002, -9.008387e-003, -9.393810e-003, -2.137025e-002, -6.774166e-003, -5.136322e-003, -6.746611e-003, -1.189268e-002, -1.182694e-002, -6.964393e-003, 5.087216e-003, 1.455131e-002, -6.030147e-003, 2.537204e-002, 1.059157e-002, 6.704792e-002, -5.016899e-003, -5.016899e-003, 6.704792e-002, 1.059157e-002, 2.537204e-002, -6.030147e-003, -7.039313e-003, 9.711439e-002, 7.226375e-003, 3.613375e-002, -1.156946e-001, -2.991378e-002, 1.344059e-002, 4.730787e-003, -9.703222e-002, 2.005606e-002, -1.846416e-002, -1.877191e-003, -1.176450e-002, -2.360860e-002, 2.608608e-002, 1.082456e-001, 4.644424e-002, 3.063114e-002, 1.731559e-002, 2.254527e-002, 2.952448e-003, 9.663043e-003, -3.432580e-002, 9.797154e-004, 3.664735e-002, 1.243641e-002, -6.121773e-003, 1.781100e-002, 1.673017e-002, 2.290236e-003, -7.380361e-003, -1.551542e-002, 1.148488e-001, -6.010569e-003, 2.557106e-003, 1.835983e-002, 2.532093e-002, 6.561240e-003, 3.264839e-006, 1.495009e-002, 2.378986e-003, -2.387760e-003, -5.842595e-003, 5.675547e-002, -4.312961e-002, 9.799018e-003, 2.562066e-002, 1.598644e-002, -5.931028e-003, 1.026124e-002, 9.643465e-003, -8.675354e-003, -1.793714e-002, 1.888147e-002, -1.293909e-003, -2.068821e-002, 1.058786e-002, 1.873634e-002, 3.252807e-003, 1.652413e-003, -5.696540e-004, -2.428333e-003, -6.704143e-003, -3.778686e-003, -1.307336e-002, 2.274237e-002, 4.296748e-002, 3.100367e-003, 2.356280e-002, 2.356280e-002, 3.100367e-003, -6.973582e-002, 4.244674e-002, -2.899737e-002, -6.569876e-003, -1.595398e-002, -2.964817e-002, 8.103839e-003, 7.077885e-003, 4.682221e-003, 3.853567e-004, -6.443130e-002, 7.449774e-003, 8.088584e-003, 8.088584e-003, 7.449774e-003, 5.435271e-002, -3.834171e-002, -1.086055e-002, -1.455817e-002, -3.721525e-002, 1.974632e-002, -8.964890e-003, -8.318785e-003, -3.267940e-003, -1.199150e-002, 9.066926e-002, 5.265777e-002, 2.670693e-002, 2.670693e-002, 5.265777e-002, -5.004404e-002, -9.745621e-003, -5.787288e-003, -5.839518e-003, -2.833957e-002, 1.644087e-002, -1.368789e-003, 2.846714e-003, 1.828488e-003, 2.786840e-003, -2.423464e-002, 6.628915e-003, -1.519939e-002, -1.519939e-002, 6.628915e-003, -6.474551e-004, -1.871306e-002, -3.328604e-003, -1.082382e-002, 4.523240e-002, -5.602298e-003, 1.543701e-003, 5.550603e-004, 2.583650e-002, -9.222481e-003, 8.602992e-003, 1.539438e-002, -1.974209e-002, -1.974209e-002, 1.539438e-002, -7.803044e-002, -6.842115e-002, -3.838222e-002, -2.975137e-002, -3.323915e-002, -2.462004e-002, -3.043638e-002, -1.036104e-002, -4.828595e-003, -1.903605e-002, 2.486375e-002, -8.353027e-002, -2.911209e-002, -2.911209e-002, -8.353027e-002, 1.718088e-002, -2.104118e-002, -1.839241e-002, -1.055109e-002, -4.919441e-002, -1.823703e-002, -5.954362e-003, -1.397737e-003, -1.080588e-002, -6.620137e-003, -1.192749e-001, 5.313153e-002, 1.206847e-002, 1.206847e-002, 5.313153e-002, -1.752707e-002, -5.864523e-003, -6.116932e-003, -4.397204e-003, -2.097324e-002, 2.258406e-002, 9.266384e-003, 3.820547e-003, 4.171156e-003, 1.096165e-002, 2.911657e-002, -9.565387e-005, -1.812337e-002, -1.812337e-002, -9.565387e-005, -2.856122e-002, -4.749355e-002, -1.271034e-002, -3.706062e-002, -1.160070e-001, -4.263273e-003, -1.145187e-002, -6.527859e-004, -8.576795e-004, -8.515292e-003, -4.913600e-002, -4.023876e-002, -3.139433e-002, -3.139433e-002, -4.023876e-002, -5.513558e-002, -1.138845e-002, -4.967745e-003, 1.104650e-002, -3.870017e-002, -2.002850e-002, -8.380496e-003, -3.824422e-003, -1.670240e-002, -6.299761e-004, -1.249763e-002, -1.824171e-002, -1.987451e-002, -1.987451e-002, -1.824171e-002, 3.958379e-002, -2.234354e-002, -2.884419e-003, -4.896914e-003, -2.458729e-002, -1.511820e-002, -8.928229e-003, -2.283636e-003, 2.844977e-003, -1.588101e-002, 7.970510e-002, -7.645535e-003, 3.440148e-003, 3.440148e-003, -7.645535e-003, 4.987636e-002, -1.047965e-002, -2.071282e-003, -4.941604e-003, -1.064447e-002, 7.794907e-003, 6.515883e-003, 2.602554e-003, 1.292491e-004, -1.635692e-003, 4.541773e-002, -4.381549e-002, -1.235165e-002, -1.235165e-002, -4.381549e-002, -1.955182e-002, 2.693499e-003, 4.106908e-002, 1.141880e-002, 3.018666e-002, -6.844724e-003, 5.171964e-003, -8.556521e-003, 3.245151e-003, 3.831817e-003, -1.750021e-002, -5.966086e-002, -6.527603e-002, -6.527603e-002, -5.966086e-002, 4.410019e-002, -9.372833e-003, -2.714848e-003, 2.029649e-002, 2.477455e-002, 1.012184e-002, 1.360223e-002, -2.448263e-003, 1.127508e-003, -6.320450e-004, 7.621708e-002, 3.596038e-002, 1.183252e-002, 1.183252e-002, 3.596038e-002, 6.676216e-002, -9.360924e-003, 5.809965e-003, 1.255696e-002, -5.114703e-002, -1.135897e-002, -8.416099e-003, -3.401743e-003, -6.465619e-003, -1.138360e-002, -8.038301e-002, 5.401130e-002, 9.925180e-003, 9.925180e-003, 5.401130e-002, 1.996721e-002, 8.101862e-003, 1.035101e-002, 8.700764e-004, -7.776285e-003, -4.379239e-003, 2.121662e-002, 5.849905e-003, 1.398135e-003, -4.914311e-003, -3.018851e-002, -4.269417e-002, -6.329514e-002, -6.329514e-002, -4.269417e-002, -4.273649e-002, -2.329780e-002, 4.822975e-003, 6.802273e-003, -1.270787e-002, 9.025231e-004, -9.343356e-003, -7.846710e-003, 5.956952e-003, 5.595164e-003},

© ISO/IEC 2004 — All rights reserved


Copyright International Organization for Standardization
Provided by IHS under license with ISO
No reproduction or networking permitted without license from IHS
Not for Resale

{6.391151e-004, 2.658350e-004, 1.545803e-003, -5.548072e-003, -6.688463e-003, -1.983993e-003, 1.339059e-002, -1.333678e-002, 2.497007e-002, 9.608901e-003, -5.786508e-003, 6.373307e-003, -5.786508e-003, 9.608901e-003, 2.497007e-002, -1.333678e-002, 1.339059e-002, -1.983993e-003, -6.688463e-003, -5.548072e-003, 1.545803e-003, 2.658350e-004, 6.545674e-003, 3.764566e-003, -1.347579e-002, 2.325493e-002, -1.591730e-002, -1.247757e-002, 3.225508e-002, 6.361452e-002, -2.741112e-003, -3.736560e-003, 9.095519e-002, 6.722833e-002, -1.004456e-002, 2.604838e-002, -5.793336e-003, -1.782169e-003, 5.954087e-003, 4.302044e-002, 7.239751e-003, -1.580646e-002, 9.625832e-003, -4.473703e-003, -2.201657e-003, 2.407696e-002, 4.856349e-003, 3.340537e-002, 4.444646e-002, -2.291994e-002, 1.872655e-002, 3.738123e-002, 2.388261e-002, 2.248453e-002, 5.898003e-002, 1.822227e-002, -3.769220e-004, -1.339323e-002, -2.972294e-002, 2.028464e-002, -1.129160e-002, 7.954524e-003, -1.402815e-002, -6.084679e-003, -1.754725e-002, -2.988025e-002, 1.150583e-002, -2.983849e-002, 1.482863e-002, 9.622131e-003, -3.402463e-004, -4.989485e-002, -2.086958e-002, -3.863439e-002, 2.943000e-002, 2.618570e-002, 7.383553e-002, -4.666512e-002, -1.132252e-002, 3.592629e-002, -7.420672e-003, 1.684346e-002, 1.761352e-002, -6.434709e-002, -1.728103e-002, 4.235727e-002, 6.654473e-003, 1.698000e-002, -1.448349e-002, -2.592309e-002, 7.125758e-002, -3.369931e-002, -1.577023e-003, 1.659477e-002, 9.693724e-003, -6.594017e-002, 6.661459e-002, 1.785025e-002, -5.307462e-002, -2.067929e-002, 2.720164e-002, 1.683734e-002, 2.510978e-002, 1.290966e-002, 1.755289e-002, -1.999886e-002, 3.424695e-002, 2.379811e-002, -4.452643e-003, -1.664179e-002, 8.486907e-003, 1.649156e-002, -3.115651e-002, -3.917132e-002, -6.431728e-002, -4.849780e-002, -3.627992e-005, -3.503591e-002, 7.701378e-002, 6.819634e-002, 1.049983e-001, 3.114117e-003, -1.243677e-002, 3.247820e-002, -3.274249e-002, 5.273604e-002, -2.594069e-002, 3.241093e-002, 7.031812e-002, 3.413714e-002, -2.302200e-002, -1.048058e-002, -4.911692e-002, -3.150019e-002, 2.243541e-002, -2.455979e-002, 3.805441e-003, 2.646354e-002, -8.115669e-002, 8.343977e-002, -2.483343e-002, -1.527317e-002, -1.180650e-002, 5.322564e-002, 9.174794e-002, 8.096151e-002, 5.853465e-002, -2.402477e-002, 3.863533e-002, 3.112779e-002, 6.075794e-003, 3.338041e-002, -2.841014e-002, -1.785299e-002, 2.876850e-002, -4.274670e-003, 5.958000e-004, -5.476599e-002, -2.426659e-002, 1.485041e-002, -5.289291e-002, -1.086585e-001, -2.890892e-002, 9.013824e-003, 2.577942e-002, 1.229259e-002, 4.006326e-002, 4.846508e-002, 4.475715e-002, 2.248788e-002, 1.071328e-002, -1.536746e-002, -2.403293e-002, 7.658042e-002, -4.466531e-002, 3.693226e-002, -5.703047e-003, -3.536311e-002, -6.300661e-003, -3.107034e-002, 2.509800e-002, 4.791460e-002, 2.683684e-004, 4.026579e-003, 6.735781e-003, -2.746020e-002, -1.011285e-002, 9.958174e-003, -2.138487e-002, -1.113366e-003, 1.160910e-003, 1.595655e-002, 5.108548e-003, 4.046744e-002, -6.529697e-002, 1.206154e-002, 1.020090e-001, 6.899973e-003, -3.281394e-002, 6.691006e-004, -2.727298e-002, -9.191819e-003, 6.499236e-002, -3.722731e-002, -4.351370e-002, -4.221199e-002, -7.066825e-002, -3.185445e-002, -3.711215e-003, -5.997297e-003, -1.702401e-002, -5.739002e-002, -4.871339e-002, -4.158399e-002, 1.310665e-002, 1.586014e-002, 2.792199e-002, 4.887693e-002, 9.393031e-002, 8.683491e-002, 7.878109e-002, -2.001095e-002, -6.715278e-002, -2.761016e-002, 3.944463e-002, -1.243598e-002, -3.694579e-002, -7.454238e-002, -3.406541e-002, -9.269729e-003, -3.628436e-002, -1.552804e-002, -2.285695e-002, -1.701020e-002, -2.055257e-002, -2.483592e-002, 2.781773e-002, 3.443286e-002, -1.842848e-002, -9.735491e-002, 5.073761e-003, 2.761883e-003, -7.872196e-003, -1.961578e-002, 2.858797e-003, -6.642681e-002, -6.594036e-002, 5.903825e-003, -2.616187e-002, -1.693823e-002, -1.778646e-002, -2.324369e-002, -1.855493e-002, -5.368576e-004, 8.751436e-004, -7.334137e-003, -2.116736e-002, -1.998980e-002, -2.920301e-002, 9.227241e-003, -4.228235e-002, -7.891880e-003, 8.043101e-002, 1.268026e-002, 1.411853e-003, 1.293251e-002, -4.309650e-002, -3.686774e-003, -2.549020e-003, -3.586955e-003, -3.094222e-003, -1.014965e-002, -1.651511e-002, -3.232014e-002, -1.089177e-002, -1.707178e-002, -5.141739e-003, -7.793166e-003, -1.372807e-003, 1.574566e-002, -4.077872e-003, -3.258720e-002, 6.697620e-003, 2.369412e-002, -7.564408e-003, -2.575779e-002, 1.745496e-002, 4.937100e-002, -7.134371e-002, 6.461244e-003, -3.254947e-002, 8.852662e-003, -8.478627e-003, -1.040438e-002, -1.137114e-002, -6.191534e-003, -6.015060e-003, 1.012578e-003, -4.329011e-003, 2.778560e-003, -8.334571e-003, 1.106677e-002, -2.788696e-002, -6.627688e-004, -4.617872e-004, -3.668991e-002, -3.482213e-003, -1.454084e-004, -1.671403e-002, 8.994863e-003, 3.709266e-002, -1.764712e-002, -3.643124e-002, -1.777671e-002, -1.777671e-002, -3.643124e-002, -1.764712e-002, 3.709266e-002, 8.994863e-003, -3.004550e-002, 2.879055e-002, -5.454036e-002, -1.218297e-001, -3.765260e-002, -2.666416e-002, -2.801110e-002, -2.247062e-004, 1.103193e-002, 6.007773e-002, 6.108344e-002, -9.200236e-002, 7.943300e-002, 5.956301e-002, 2.922589e-002, -9.622359e-003, 9.550478e-003, -8.387840e-003, -7.019908e-003, -3.893579e-002, -1.790183e-002, 1.710831e-001, 3.516423e-004, -7.954115e-002, 1.215318e-001, 3.781866e-002, -1.680016e-002, -4.525325e-003, 1.370067e-003, 5.758276e-003, -1.930859e-002, -3.061976e-002, -1.647580e-002, 3.093366e-003, 3.958552e-002, 2.770290e-002, -1.265440e-002, -5.392103e-003, -1.203391e-003, 3.789997e-003, -2.821211e-003, -4.112855e-004, -2.448942e-002, -4.099193e-002, -4.929266e-002, -6.330719e-003, -4.570913e-003, -1.979934e-002, -1.362930e-002, -1.329393e-002, -3.619948e-003, -1.293789e-002, -6.749218e-003, -6.731837e-003, -4.108652e-002, 2.012772e-002, -2.522409e-003, -6.607224e-003, -2.097968e-003, -4.411033e-003, 7.075433e-004, -4.516716e-003, -5.005159e-003, -5.753705e-003, -5.725540e-003, -


© ISO/IEC 2004 — All rights reserved

Copyright International Organization for Standardization
Provided by IHS under license with ISO
No reproduction or networking permitted without license from IHS
Not for Resale

2.713146e-003, 2.065940e-002, -3.489458e-003, 4.055170e-002, -2.208860e-002, -1.709217e-002, 4.604852e-003, 4.604852e-003, -1.709217e-002, -2.208860e-002, 4.055170e-002, -3.489458e-003, 1.034222e-002, 2.630824e-002, -3.816379e-003, -5.499128e-002, 5.208134e-003, 3.542747e-002, -6.578836e-003, 5.840347e-002, 4.084003e-002, 2.995778e-002, -5.303811e-002, -5.105968e-002, 1.038086e-001, -8.238914e-002, -6.757276e-002, -1.348743e-002, -1.881047e-002, -3.024666e-002, -5.328264e-002, -7.120459e-002, 8.549198e-002, -9.160709e-002, 2.509217e-002, -2.488574e-003, -5.655687e-002, -2.469479e-002, 3.363649e-003, -1.068970e-002, 1.980623e-002, 4.447968e-003, -3.347717e-002, 4.874605e-002, -4.380816e-002, 7.128939e-002, -7.138087e-002, -4.953316e-002, -9.989201e-003, -1.900916e-004, -3.128348e-003, -1.449019e-002, -1.246331e-003, 7.205735e-003, 1.482597e-002, 2.855712e-002, -3.535241e-003, -6.560900e-002, -2.231454e-002, -1.101956e-002, -7.704104e-003, 1.741993e-005, -1.277078e-002, -7.297397e-003, 2.915635e-002, -3.959342e-003, -2.202292e-002, 3.057837e-002, -2.495923e-002, -1.432685e-002, -4.642305e-003, -1.185133e-002, -6.881733e-003, -7.482592e-004, 9.307744e-004, 1.065518e-003, -1.388909e-002, -1.416743e-002, 1.514368e-003, -4.687319e-003, -1.966219e-002, -4.501046e-003, -1.522669e-002, 2.509573e-003, 2.509573e-003, -1.522669e-002, -4.501046e-003, -1.966219e-002, -4.687319e-003, -9.547595e-003, 3.096635e-002, 3.506340e-002, 7.194600e-002, 4.583587e-002, 1.219494e-002, -1.288173e-002, -8.432336e-002, -6.220351e-002, -7.486671e-002, -4.950618e-002, 4.329505e-003, 1.794878e-002, -9.508927e-002, 2.268062e-002, 1.700925e-002, 1.568683e-002, -9.531457e-004, 4.707712e-002, 6.412242e-002, -2.752954e-002, 6.346680e-002, 4.316332e-002, 2.737409e-002, -4.142613e-002, -3.829432e-002, 1.029510e-003, 7.702896e-003, 3.498720e-002, 4.286458e-002, 5.383496e-002, -1.773288e-002, -4.571330e-002, -1.051519e-002, 2.192630e-002, -4.035971e-002, -2.941634e-002, -1.735609e-002, -1.319154e-002, 4.927897e-003, -3.103162e-003, -8.296987e-003, -3.245134e-002, -5.260575e-002, 5.336814e-002, 4.088160e-002, 3.692607e-002, -8.050082e-003, -2.205442e-002, -1.108278e-002, 5.235978e-003, 8.221428e-003, -3.446265e-003, -4.572247e-003, -2.777530e-002, -5.959597e-003, -2.407014e-002, 2.217890e-003, -4.260282e-003, -1.490362e-002, -1.475537e-002, -2.689404e-004, -8.424552e-004, 1.517237e-003, -2.126694e-002, -2.728586e-002, -4.820621e-003, 2.246497e-003, -3.122562e-002, 7.808250e-005, 1.652941e-002, -1.559835e-002, -1.559835e-002, 1.652941e-002, 7.808250e-005, -3.122562e-002, 2.246497e-003, -5.683070e-002, -5.076885e-002, 9.227007e-002, -1.322378e-001, -2.833735e-002, 1.311103e-002, 2.121215e-002, 3.204295e-002, 9.996454e-002, 7.107396e-002, 7.181000e-003, 5.728020e-002, -1.132246e-002, 4.128941e-002, 7.341438e-002, 5.437148e-002, 6.823053e-003, 3.194485e-002, 3.482915e-002, 2.922264e-002, 2.779369e-003, 1.066055e-001, -2.630634e-003, 6.170142e-002, -9.192195e-002, -2.217409e-002, 1.191034e-003, 2.558950e-002, 2.079765e-002, 7.028487e-003, -3.155659e-002, -5.238427e-002, -5.368701e-002, -1.293996e-001, -9.388103e-002, -1.809125e-002, -1.028215e-002, -1.491827e-002, 2.557687e-004, 1.722212e-003, -1.869432e-002, -2.792296e-002, -1.436111e-002, 3.430431e-002, 1.306998e-002, -4.441123e-002, -1.543583e-002, -9.855500e-003, -6.058965e-003, -5.382160e-003, -1.162923e-002, -8.312111e-003, -2.484518e-003, 1.049204e-002, 3.237591e-002, -2.369760e-002, -2.290589e-002, -2.694207e-002, -5.959336e-003, -1.332552e-002, -7.404447e-003, -6.268322e-003, -9.538352e-003, -4.935191e-003, 1.213449e-002, -2.078611e-002, 1.719381e-002, -3.795041e-002, -3.857720e-002, -3.857720e-002, -3.795041e-002, 2.645585e-002, 3.659889e-002, 2.267408e-002, 1.754924e-002, 4.414488e-002, 2.823217e-002, 4.343458e-002, -9.386405e-003, 1.080225e-002, 1.724044e-002, -3.336672e-002, -9.933843e-003, -1.056163e-002, -1.056163e-002, -9.933843e-003, 1.083696e-001, 3.013993e-003, -7.938325e-003, -9.351634e-003, -1.402502e-002, 6.059399e-002, 6.334506e-003, 7.234623e-004, -1.256110e-003, -9.956748e-004, -1.292567e-002, 4.712160e-002, 1.809503e-002, 1.809503e-002, 4.712160e-002, -9.350151e-002, 6.136368e-003, -1.138607e-003, 2.448946e-003, 1.304934e-002, 5.908951e-002, 4.218179e-003, 2.198122e-003, 3.934794e-003, 2.315311e-002, 3.250726e-002, -4.997801e-002, -5.796745e-002, -5.796745e-002, -4.997801e-002, 9.759903e-002, -9.477837e-003, -5.017051e-003, 7.926647e-003, 3.537978e-002, 6.822659e-002, -3.365393e-003, -1.380113e-003, -4.237604e-004, 3.533983e-002, 6.667330e-003, -1.932210e-002, 2.919127e-002, 2.919127e-002, -1.932210e-002, -6.317905e-003, 3.842425e-003, -1.397378e-002, 1.079235e-002, 9.410317e-003, -1.512562e-002, -7.248085e-003, -8.693213e-003, -6.555782e-003, -3.127563e-003, -7.208455e-003, -5.998072e-003, -1.467581e-002, -1.467581e-002, -5.998072e-003, 4.211013e-002, -5.622165e-003, -6.426146e-003, -8.379283e-003, 7.465950e-003, -5.756480e-002, 2.034244e-003, -3.241982e-003, -7.859320e-003, -4.762776e-002, -1.470758e-002, -3.919582e-002, -2.465320e-002, -2.465320e-002, -3.919582e-002, 1.860148e-002, -3.720646e-003, -1.682942e-002, -1.265148e-002, -2.054346e-002, -6.054328e-002, -4.296350e-002, -7.506348e-003, -8.428853e-003, -1.402659e-002, 1.578539e-002, -7.259589e-003, 3.176377e-002, 3.176377e-002, -7.259589e-003, 7.170673e-002, -2.163387e-002, 2.340514e-002, -9.616502e-003, 3.413523e-002, 4.475428e-003, -1.785145e-002, -1.046035e-002, -1.205383e-002, -1.127801e-002, -1.545851e-003, -2.022749e-002, 1.167996e-002, 1.167996e-002, -2.022749e-002, 5.543746e-002, 2.411944e-002, 5.270772e-003, 1.310244e-002, 2.609768e-002, -4.756204e-003, 2.984560e-003, -4.604577e-003, -1.120430e-003, -1.009770e-002, 1.756836e-002, -2.655276e-002, -5.887537e-003, -5.887537e-003, -2.655276e-002, -4.493535e-002, -2.608375e-002, -4.896887e-003, -5.188901e-003, -2.942428e-002, -2.607430e-002, -5.167850e-003, -9.890963e-003, -1.265896e-003, -1.407658e-002, 6.455659e-002, 2.946074e-003,

© ISO/IEC 2004 — All rights reserved


Copyright International Organization for Standardization
Provided by IHS under license with ISO
No reproduction or networking permitted without license from IHS
Not for Resale

3.747785e-004, 3.747785e-004, 2.946074e-003, -4.003777e-002, -3.211051e-002, -1.145551e-002, -8.487715e-003, -2.822312e-002, -5.470815e-002, -1.492604e-002, -7.340672e-003, -5.777849e-003, -1.042682e-002, -6.704511e-002, 1.675738e-002, -1.941987e-002, -1.941987e-002, 1.675738e-002, 1.230153e-001, 1.014299e-001, 3.380987e-002, 8.149752e-003, 6.622524e-002, 2.042666e-002, 7.796847e-003, 5.979063e-003, 6.246446e-003, 1.566242e-002, 3.555633e-003, 5.015364e-002, -4.586399e-003, -4.586399e-003, 5.015364e-002, 1.617713e-002, -2.443831e-003, 2.332629e-002, 1.976573e-002, 3.597535e-002, 3.324080e-002, 1.054125e-002, -1.093058e-002, 4.723288e-004, -1.730577e-003, -1.806378e-002, 1.811381e-002, -2.878848e-003, -2.878848e-003, 1.811381e-002, 3.821704e-004, 1.028795e-002, 1.379741e-002, 1.457732e-002, 3.016454e-002, -1.095650e-002, 5.220691e-004, -5.030516e-004, 5.811668e-003, -4.189820e-003, 8.332435e-003, -4.227032e-003, -8.885235e-003, -8.885235e-003, -4.227032e-003, -2.586357e-002, 2.622564e-002, 8.848316e-003, 6.134330e-003, 2.449349e-002, -3.321560e-002, -1.327598e-002, -2.243312e-003, -4.082024e-004, -3.347009e-003, -1.066454e-002, -3.022488e-002, -3.609766e-003, -3.609766e-003, -3.022488e-002, 1.783737e-003, -1.009457e-002, 7.479308e-003, 3.530730e-002, 1.652934e-003, -2.801990e-002, -1.109675e-002, -9.810457e-003, -3.136423e-003, 5.236680e-003},
{3.691364e-003, 1.656139e-003, -1.248801e-002, 2.456854e-002, 1.073265e-003, 6.746365e-003, 1.533022e-002, -2.618747e-002, -8.622651e-003, -3.676522e-002, -1.039517e-002, -1.564806e-002, -1.039517e-002, -3.676522e-002, -8.622651e-003, -2.618747e-002, 1.533022e-002, 6.746365e-003, 1.073265e-003, 2.456854e-002, -1.248801e-002, 1.656139e-003, 1.891209e-003, 1.102410e-003, 3.137118e-002, -7.984149e-003, -4.764055e-002, -1.551615e-002, -2.215762e-002, 1.135354e-002, 1.096736e-004, -1.070496e-003, -4.220156e-002, -7.290383e-003, -7.189137e-004, 1.769864e-002, 1.006167e-004, -2.031982e-002, -1.710712e-003, -3.838538e-003, -6.909294e-005, 4.620545e-002, 1.965818e-002, 1.719964e-002, -2.877654e-002, 3.775863e-003, 1.512396e-002, 4.079220e-003, -2.976036e-002, -7.058602e-002, -2.688327e-002, -1.534057e-002, 5.600817e-002, -1.405014e-002, -7.723605e-004, -3.169223e-002, 1.222272e-002, 5.212685e-002, 4.156322e-002, 4.556137e-002, 2.608692e-002, -4.520190e-002, -9.375064e-003, 3.695284e-002, -1.517565e-002, -1.236406e-002, 9.352501e-003, 1.031441e-003, 2.896653e-002, -1.761581e-002, 4.235142e-003, -5.476999e-002, 4.663400e-002, 4.511365e-003, -4.470634e-002, 5.782742e-002, 4.630848e-002, -2.289425e-002, -5.821229e-003, -2.857547e-003, 3.190057e-002, 3.789123e-002, 7.519479e-003, -1.086656e-002, 1.824717e-002, 2.297522e-002, -5.721748e-003, -4.985867e-003, -2.054337e-002, 1.126686e-002, -3.498900e-002, 2.337818e-002, 1.824517e-002, 3.963280e-002, -1.491877e-002, -7.750999e-002, 2.776184e-002, 8.564216e-002, -2.074619e-002, -1.937962e-002, -2.505972e-002, -2.103786e-002, 2.048490e-002, -3.117238e-002, -3.606299e-002, 8.133078e-003, -1.290946e-003, 5.051477e-002, -6.091411e-002, 3.619917e-002, -4.687508e-002, -2.920315e-002, -4.287058e-002, -8.675180e-003, 1.582897e-002, -8.627501e-003, 3.281786e-002, -2.876325e-002, 8.029766e-002, 4.838872e-002, -3.965884e-002, -3.122851e-002, 2.866835e-002, 9.486556e-002, 6.257590e-002, 1.926761e-002, -2.900259e-002, -7.184359e-002, -5.034877e-002, 5.247551e-002, 5.654696e-003, -4.206085e-002, -2.107214e-002, -4.153756e-002, 3.198357e-002, 4.740881e-002, -5.439942e-002, -9.288669e-003, 1.291424e-001, -1.810931e-002, 7.083832e-002, 1.170718e-002, -7.048169e-003, 1.343755e-002, -2.708026e-002, -8.813512e-004, -1.071738e-002, -9.987841e-002, -7.752382e-002, -1.068936e-002, -3.513805e-002, 6.864655e-002, -4.019347e-003, 1.213036e-003, -1.663741e-002, 2.355788e-002, 1.633930e-002, 4.638083e-004, -5.546820e-002, -4.846539e-002, -2.136078e-002, -1.210305e-001, 1.960908e-003, -1.539406e-002, -6.104178e-003, -7.333461e-003, -1.728872e-002, -5.315903e-002, -1.525356e-003, 1.693977e-003, -5.056064e-004, 1.926486e-002, 3.425951e-002, 1.252769e-002, 3.288598e-002, 1.367646e-002, 2.058450e-002, 1.563151e-002, 4.228265e-002, 5.240399e-002, 3.808688e-002, 7.055830e-002, 2.664459e-002, -5.862289e-002, 1.029296e-003, -1.719944e-002, -2.731481e-002, -1.263168e-002, -1.913744e-002, -7.989772e-003, -1.370562e-002, -2.613513e-002, 7.453722e-002, 1.074983e-002, 6.014263e-004, -7.321576e-003, -5.996805e-002, 1.915532e-002, 4.844644e-002, -3.290604e-002, 4.691977e-002, 2.682903e-002, 3.681288e-002, 2.873069e-002, -7.138787e-002, -3.255367e-002, -2.111708e-002, -4.470295e-002, -3.070357e-002, -2.450366e-002, -3.331541e-002, -3.271028e-002, -1.520811e-002, -2.616654e-002, -4.658345e-002, 1.376477e-002, -1.153701e-003, -6.481311e-002, -2.367364e-002, -2.602630e-002, -5.714018e-002, 1.548694e-002, -7.027311e-002, 6.310229e-002, 1.332362e-002, 2.514924e-004, 1.702214e-002, 7.210479e-003, -2.852392e-002, -1.220374e-002, -2.079835e-002, -2.333448e-002, -2.292994e-002, -1.882569e-002, -4.360822e-002, -1.616765e-002, -1.362037e-002, -1.373265e-002, 2.115305e-002, -3.828765e-002, -6.076184e-002, 1.408925e-001, 4.147639e-002, -1.116907e-002, 2.481671e-002, 4.337713e-002, -2.364739e-002, 2.868483e-002, 1.591487e-002, -2.750143e-003, -5.215166e-003, -5.575133e-003, -3.019578e-002, -1.696723e-002, -4.525672e-003, 3.172181e-003, -1.192184e-002, -1.429939e-002, -1.014089e-002, 3.250116e-002, 6.144562e-003, 7.478520e-002, 8.173043e-002, 5.917751e-002, -5.366526e-002, -1.783344e-002, -7.825101e-002, -1.211235e-002, -2.361607e-002, 6.273124e-003, 4.059190e-003, -1.210996e-003, -7.746868e-003, -1.280313e-002, -1.213708e-002, -1.770083e-002, 6.859214e-005, -3.405230e-004, 1.941551e-003, -5.982574e-003, -2.883561e-003, -3.414251e-003, -3.989860e-003, 3.426864e-002, -4.058219e-002, 4.627730e-003, 9.071614e-002, -2.848536e-002, -3.965703e-002, -2.015613e-002, -1.027035e-002, 3.785922e-003, -6.922772e-003, -1.525734e-002, 3.797082e-003, -2.835384e-003, -


© ISO/IEC 2004 — All rights reserved

Copyright International Organization for Standardization
Provided by IHS under license with ISO
No reproduction or networking permitted without license from IHS
Not for Resale

1.242477e-002, -1.401800e-002, -2.756134e-002, 1.905333e-004, 8.422755e-003, 1.414156e-002, 4.786543e-003, -1.403164e-003, -1.881164e-003, 2.859702e-003, 1.100432e-002, -8.779586e-003, 1.865943e-002, -4.754967e-003, 1.153036e-002, -7.872959e-003, 5.904282e-003, 5.804856e-002, 5.804856e-002, 5.904282e-003, -7.872959e-003, 1.153036e-002, -4.754967e-003, 1.801649e-002, -1.232218e-002, 6.222337e-002, 8.633614e-003, -2.594848e-003, 1.701679e-002, -5.460451e-002, -5.091549e-002, -1.421312e-002, 2.407052e-002, -3.036296e-003, -4.439973e-002, 3.368081e-002, 8.583791e-002, 7.002748e-002, 8.577364e-002, 2.527585e-002, -3.538557e-002, -6.023762e-002, -4.004670e-002, 8.808571e-002, 2.317986e-002, 5.808483e-002, -1.262677e-001, -3.613166e-002, 5.885593e-002, 4.289959e-002, 2.103498e-002, -1.852431e-002, -9.626844e-003, -1.243785e-002, 3.177948e-002, 9.567687e-002, 1.083945e-001, -6.566674e-002, 1.799133e-002, 3.101995e-002, 2.027471e-003, 5.772858e-003, -5.711009e-003, -5.204931e-003, -8.522743e-003, 1.185637e-003, -2.346618e-002, 3.020430e-002, -4.152001e-002, 1.610668e-002, -3.404027e-003, -1.240097e-002, -1.237891e-002, -4.802261e-003, -1.320217e-002, 4.507302e-003, 1.690256e-002, -2.775067e-002, 3.075094e-002, -3.578203e-002, -7.027745e-003, -9.307042e-003, -1.163743e-002, -7.205973e-003, -4.771351e-003, -5.738890e-003, -1.510798e-003, 6.839291e-003, -2.633226e-003, -1.385553e-002, 7.124003e-003, 1.740813e-002, -3.661721e-002, -1.005835e-002, 5.918073e-003, 5.918073e-003, -1.005835e-002, -3.661721e-002, 1.740813e-002, 7.124003e-003, 5.036061e-005, -9.228619e-003, 3.815553e-002, -1.137657e-001, -5.474325e-002, -7.382196e-002, -7.444583e-002, -9.318676e-002, -5.263349e-002, -4.227242e-002, -3.186134e-002, 3.750076e-002, -4.265719e-002, 4.998346e-002, -3.431725e-002, -5.141968e-002, -2.582021e-002, 2.620580e-002, 7.244795e-002, 2.612006e-002, 5.716726e-002, -3.293996e-002, 9.464822e-002, 1.373930e-001, 3.666762e-003, -1.227999e-002, -1.346969e-002, -1.688785e-002, 7.628330e-003, 1.233683e-002, 4.496918e-003, -4.259693e-002, -4.542295e-002, 4.428770e-002, 2.630465e-002, 1.667105e-002, -1.189778e-002, -4.561236e-003, -9.236077e-003, -1.877475e-004, -8.013654e-003, 5.084880e-002, 4.299248e-003, -8.169446e-002, 2.433031e-002, -2.360115e-002, 2.024552e-002, 4.608482e-003, -3.673508e-003, -3.804779e-003, -9.738596e-003, -7.660366e-003, -9.272305e-003, 1.515332e-002, 9.881579e-003, -1.251584e-002, -4.367495e-003, -7.033358e-003, 3.640323e-003, -5.256883e-003, -1.506915e-003, -2.310340e-003, 1.496986e-002, 5.809699e-003, 3.333485e-002, -1.258073e-002, -6.461544e-003, -4.462599e-003, 7.657648e-003, -2.758901e-002, 3.553674e-002, 4.067353e-005, 4.067353e-005, 3.553674e-002, -2.758901e-002, 7.657648e-003, -4.462599e-003, 5.671608e-003, -1.392810e-003, 5.989764e-002, -9.457907e-002, -8.759991e-002, -3.606658e-002, -2.737774e-002, -2.321016e-002, 8.016320e-003, 7.000931e-002, -5.477493e-002, 1.125867e-002, 5.316446e-002, -3.830636e-002, -7.286565e-002, -5.993623e-002, -2.780205e-002, -2.643211e-002, 8.488448e-003, 3.367503e-002, -5.103310e-002, 6.233213e-002, 4.478794e-002, -5.873033e-002, -5.111693e-002, -4.973729e-002, -4.374259e-002, -3.011892e-002, 9.545457e-003, -2.090983e-002, -4.141845e-002, -9.746465e-003, 2.846599e-003, -2.207148e-002, -2.752131e-002, 2.251739e-002, -5.279997e-003, -3.153303e-002, -3.266758e-002, -1.240995e-002, -1.410569e-002, -1.472722e-002, -2.441431e-002, -7.841132e-003, -3.884697e-002, 1.144812e-002, 1.480985e-002, 2.588526e-003, -1.097555e-002, -1.650659e-002, -1.255750e-002, -1.163103e-002, -8.848998e-003, -6.520660e-003, 1.479877e-003, -1.528136e-002, -3.670544e-002, -9.506330e-003, 3.620937e-003, -4.586238e-003, -1.014846e-002, -8.856525e-003, -8.388498e-003, -5.466034e-004, -1.418098e-002, -1.320254e-002, 5.349006e-003, 1.764516e-003, 4.396376e-002, 7.358649e-004, -1.523948e-002, -2.225482e-002, -2.225482e-002, -1.523948e-002, 7.358649e-004, 4.396376e-002, 1.764516e-003, -2.622731e-002, -1.445638e-002, 5.017003e-002, -1.478697e-002, -3.641608e-002, -2.436204e-002, -7.595699e-003, 6.780742e-003, -1.360671e-002, 1.054876e-001, 4.421196e-002, 1.192415e-002, 1.424945e-001, 3.712176e-002, 5.546248e-003, -1.610843e-002, -3.881877e-002, -3.113006e-002, -2.808274e-002, -4.884291e-002, -7.711488e-002, 1.143388e-001, 4.035466e-002, -6.460356e-002, 6.485933e-002, -1.294456e-002, 2.290551e-003, -1.344785e-003, -9.302409e-003, -1.543256e-002, -5.572454e-002, -4.622903e-002, -6.494116e-002, -7.688740e-002, 3.238107e-003, -6.703484e-003, -3.247167e-002, 7.096725e-003, -1.343226e-002, -1.189899e-003, -1.538438e-002, -1.005348e-002, -2.933258e-002, -4.533780e-002, -5.260198e-002, 5.503688e-003, 9.737641e-003, -5.366777e-003, -9.893710e-003, -9.473102e-003, -1.002087e-002, -2.320384e-002, -3.300759e-002, -4.783844e-004, 3.638729e-003, -1.077956e-002, -2.421611e-002, -7.821845e-003, 5.393415e-004, -8.205036e-003, -2.668612e-003, -1.258469e-002, -1.324970e-002, -1.047389e-002, -1.513108e-002, -1.517048e-002, 3.972554e-003, -4.768114e-002, -3.002304e-002, -3.002304e-002, -4.768114e-002, -6.976949e-003, 3.469521e-002, 3.819716e-002, -3.959625e-003, 4.630337e-004, -5.735608e-003, -1.019508e-002, -7.831925e-004, 2.453851e-003, 1.180072e-002, 8.002232e-003, 4.189460e-003, -1.205336e-002, -1.205336e-002, 4.189460e-003, 2.254276e-002, 2.495241e-002, 7.184233e-003, -1.067866e-004, 1.520261e-002, 2.394844e-002, -1.095163e-002, 4.414563e-003, -2.640936e-003, 7.893269e-003, -2.508783e-002, -6.149361e-003, -3.302255e-003, -3.302255e-003, -6.149361e-003, -2.036005e-002, -1.399260e-003, -4.372398e-003, -3.188131e-003, -1.598359e-002, -2.765799e-002, 4.419155e-003, -2.010867e-003, 3.490719e-003, -1.891304e-002, 4.245247e-002, 5.165205e-003, -6.801487e-002, -6.801487e-002, 5.165205e-003, 5.408607e-005, -7.913044e-003, -7.594256e-003, -1.791382e-003, 1.895912e-002, -1.016261e-002, 2.574731e-003, -2.934099e-003, -1.919710e-003, 3.440435e-003, -4.486493e-002, 8.306021e-003, -1.311275e-002, -1.311275e-002,

© ISO/IEC 2004 — All rights reserved


Copyright International Organization for Standardization
Provided by IHS under license with ISO
No reproduction or networking permitted without license from IHS
Not for Resale

8.306021e-003, -1.065748e-001, -1.456464e-002, 3.178496e-002, -1.550886e-002, -2.610687e-002, -2.503954e-002, -2.439992e-003, 6.262852e-003, -4.614572e-003, -1.974107e-002, 5.154957e-002, -1.948319e-002, -1.838716e-002, -1.838716e-002, -1.948319e-002, -1.663943e-002, -4.514420e-003, -2.307518e-003, -1.256041e-002, -4.971217e-003, -4.842742e-003, -1.443917e-002, -7.239593e-003, -3.468510e-003, 2.170374e-003, -3.295406e-003, 1.808987e-003, -2.109366e-002, -2.109366e-002, 1.808987e-003, 2.615057e-002, -1.537133e-003, -7.218049e-003, -9.460769e-003, -1.846409e-002, -6.034568e-003, 1.433934e-002, -3.185153e-003, -2.900782e-003, -1.392693e-002, -2.792476e-002, -5.161156e-003, 2.387579e-002, 2.387579e-002, -5.161156e-003, -3.782804e-002, -2.606971e-002, -1.994335e-002, 1.506370e-002, -1.271679e-002, -1.082984e-002, -1.036252e-002, -4.888331e-003, -6.624574e-004, 3.174738e-003, 2.697545e-002, -1.808103e-002, 9.584148e-003, 9.584148e-003, -1.808103e-002, 3.443546e-003, 1.385971e-003, -9.503465e-003, 1.632665e-002, 3.566195e-002, -8.082933e-004, -3.874330e-003, -8.553795e-003, -1.115385e-002, 5.188842e-003, -3.666710e-002, -1.010195e-001, -3.403264e-002, -3.403264e-002, -1.010195e-001, -3.639125e-002, -3.020478e-002, -2.026412e-002, -1.230766e-002, -2.139343e-002, -6.124624e-002, -1.099744e-002, -6.069139e-003, -6.633691e-003, -1.179877e-002, -7.216202e-002, -1.363741e-001, -4.118070e-002, -4.118070e-002, -1.363741e-001, -2.742609e-002, -2.667236e-003, -4.788747e-003, -1.225036e-002, -2.211273e-002, -5.741953e-002, -1.325056e-002, -5.888441e-003, -8.399593e-003, -2.633326e-002, 7.312859e-002, -4.560534e-002, 6.174396e-003, 6.174396e-003, -4.560534e-002, -2.307682e-002, 1.514737e-002, -1.122003e-002, -9.138699e-003, -2.305052e-003, -9.148757e-003, 5.035695e-003, -4.555205e-003, -6.428685e-003, 2.673659e-003, -4.891276e-004, -1.051063e-002, 6.489245e-003, 6.489245e-003, -1.051063e-002, 4.308825e-002, -6.047260e-003, -3.571400e-002, -9.772205e-003, -1.276973e-002, 2.942836e-002, 2.669330e-002, -2.500958e-002, -1.432621e-002, -3.057810e-003, 3.719233e-003, -8.273104e-002, -2.621492e-002, -2.621492e-002, -8.273104e-002, 7.818236e-002, 2.965811e-002, 6.427145e-003, 1.639905e-002, 1.724156e-002, 1.056469e-002, -2.978381e-003, -1.229438e-003, -2.632455e-003, 1.054933e-002, 5.868244e-002, 7.224957e-003, -2.021584e-003, -2.021584e-003, 7.224957e-003, 4.498882e-002, 4.925699e-002, 2.192457e-002, 1.330617e-002, 1.782705e-002, 8.700935e-003, 1.941662e-002, -2.023657e-004, 9.582452e-004, -4.720378e-003, -5.430001e-002, -6.120454e-003, -3.128669e-002, -3.128669e-002, -6.120454e-003, 7.507694e-002, -8.206773e-004, -1.042665e-002, 1.307408e-003, 3.425201e-002, 1.997196e-003, 9.927941e-003, 1.054766e-004, -9.768079e-003, -6.693057e-003},
{4.397504e-004, 2.932382e-003, 1.281498e-003, 2.046425e-002, -3.571229e-003, -2.086910e-002, 4.919712e-003, -2.442157e-003, 1.114281e-003, -2.030634e-002, 3.215919e-002, -1.516043e-002, 3.215919e-002, -2.030634e-002, 1.114281e-003, -2.442157e-003, 4.919712e-003, -2.086910e-002, -3.571229e-003, 2.046425e-002, 1.281498e-003, 2.932382e-003, 1.353344e-003, 5.687099e-003, 2.343449e-002, -2.997955e-003, 6.855626e-003, -1.829795e-002, -1.984083e-003, 1.324140e-003, 1.062237e-002, -3.602811e-002, -3.491167e-002, -1.935063e-002, -7.260460e-002, 2.333824e-002, 1.269853e-002, -3.112164e-002, -1.600230e-003, -7.101337e-003, 3.195481e-002, 1.911761e-002, 2.170348e-002, 1.220383e-002, -1.068498e-002, 6.041275e-004, 4.667225e-002, 2.619862e-002, -1.726683e-003, -7.469599e-003, -1.282422e-002, -2.577058e-002, 2.137029e-002, -1.335585e-002, 7.472644e-003, 6.135067e-002, -1.009070e-001, 4.700801e-002, 2.724329e-002, 3.300724e-004, 1.058970e-002, -1.598342e-002, -2.774569e-002, 7.778472e-003, -8.511425e-003, 5.625422e-003, -1.434834e-003, 1.755494e-002, 6.863808e-003, 2.065662e-002, -1.894844e-002, 1.651866e-002, 5.770618e-002, 4.495458e-003, 2.198630e-002, -7.259546e-002, 7.400130e-004, 7.118424e-002, -2.974965e-002, 8.170881e-002, 3.339126e-002, -1.614719e-002, 1.728839e-002, -8.082097e-003, -4.992666e-003, -1.553991e-002, -1.876225e-002, 2.078742e-002, 7.314709e-003, 1.076733e-002, 4.173688e-003, -1.206489e-002, 1.930117e-002, -1.266420e-002, -1.483240e-002, 1.361109e-002, 1.828347e-002, 1.352456e-002, 2.320778e-002, 4.910347e-003, 9.247928e-003, 1.180031e-002, -2.517349e-002, -5.154412e-003, -8.897766e-002, -4.958778e-004, -2.614134e-002, 2.452823e-002, -3.543330e-002, -8.714234e-003, 3.941936e-002, 4.028625e-002, 5.729010e-002, 2.497890e-002, 3.597572e-002, 5.401899e-002, -6.927554e-003, -4.793072e-003, 1.034787e-002, -1.290471e-002, -1.928551e-002, 1.493604e-002, 8.122046e-002, 5.159702e-002, 1.973078e-002, -4.346018e-002, -1.332708e-002, 6.525185e-002, 8.058906e-002, 3.792260e-002, 3.548840e-002, -2.061227e-003, 9.868700e-002, 5.498870e-002, -3.659932e-002, -3.526367e-002, -1.439257e-002, 1.658601e-002, -1.017304e-002, -6.048285e-002, -1.156092e-002, 1.837063e-002, 5.007104e-002, 6.860196e-002, 1.052488e-001, 1.206379e-002, 5.537673e-003, 5.354481e-002, 4.320097e-002, 4.380396e-002, -4.127688e-002, -1.086127e-001, 2.616417e-002, 4.511428e-002, 2.796912e-002, 8.532660e-003, -4.558589e-003, -8.083262e-003, -8.591882e-002, -3.227066e-002, -3.558358e-004, -3.643226e-002, 1.604558e-002, 5.899601e-003, -1.248916e-002, -7.987847e-003, -7.058323e-003, 4.044755e-002, 4.746456e-002, 2.963010e-002, 4.699543e-003, -5.385219e-002, -4.925709e-002, -3.884166e-002, 2.265623e-002, 8.956145e-003, -3.685969e-003, -3.554944e-002, 4.512857e-002, -5.853210e-002, -1.186524e-002, 8.164354e-002, -8.028489e-003, -5.986897e-003, -2.366822e-002, -3.932192e-002, -3.059330e-002, 3.020130e-003, -1.584666e-002, -2.291458e-002, -7.026454e-003, -8.232386e-003, 1.851857e-002, -5.633925e-002, 4.390278e-002, -3.505089e-002, 2.039972e-002, -3.832213e-002, -6.719986e-002, 2.539613e-002, 6.411985e-002, -4.764462e-002, -5.550631e-002, -1.231220e-003, 9.267161e-003, 3.247262e-002, 4.241059e-003, 5.521186e-003, -


© ISO/IEC 2004 — All rights reserved
--`,,```,,,,````-`-`,,`,,`,`,,`---

Copyright International Organization for Standardization
Provided by IHS under license with ISO
No reproduction or networking permitted without license from IHS
Not for Resale

5.270958e-003, 2.180671e-002, 1.963059e-002, 2.370897e-002, 1.818084e-002, 3.693341e-002, -3.743579e-002, -8.788128e-002, -5.436467e-003, -1.199410e-002, 5.230320e-002, -2.114789e-002, -5.105269e-002, -1.087127e-002, -8.783651e-002, 3.587683e-002, -5.680534e-002, 8.196883e-003, 1.136814e-002, 3.911024e-002, 7.800875e-003, 3.178911e-002, 2.140193e-002, 2.263120e-002, 1.667504e-002, 1.663891e-002, 1.670895e-002, 2.152773e-002, 1.107703e-002, -3.199123e-002, 2.895989e-002, 3.130154e-003, 3.094894e-002, 3.571799e-003, 8.301689e-003, -4.746633e-003, 4.929614e-002, -2.025786e-002, -3.598524e-002, -3.041404e-002, 4.194681e-002, 3.380586e-002, 1.057534e-002, 2.698847e-002, 2.743506e-002, 1.957787e-003, 2.274201e-002, 7.609332e-003, 3.156775e-002, 6.510690e-003, 2.225164e-002, 7.641914e-003, 5.365359e-002, -1.816780e-002, 5.537574e-002, -2.754642e-002, -1.128187e-001, -2.770925e-002, -3.906615e-002, -1.177845e-002, 6.538465e-003, 2.277630e-003, 2.098212e-002, 1.285127e-002, 2.867517e-002, 2.094670e-002, 2.055025e-002, 4.438855e-003, 1.560650e-002, 1.122524e-002, 2.000365e-002, 8.626752e-003, -2.798944e-002, -1.193871e-002, 1.085322e-002, 2.085846e-002, -7.939281e-002, -1.448031e-002, 1.073998e-001, -5.592468e-002, 7.129499e-002, 4.785371e-002, -3.798159e-002, 1.096712e-002, -8.740576e-003, 1.058880e-002, 2.005539e-002, 1.019344e-002, 1.982818e-002, 1.176032e-002, 1.460955e-002, 1.868503e-003, 6.644070e-003, 1.460464e-002, -6.896417e-004, -1.581372e-002, -6.382658e-003, -2.229781e-002, 7.673994e-002, -3.121844e-002, -1.120444e-002, -1.759883e-002, 7.285852e-002, -2.939657e-002, 2.535176e-002, -6.766773e-003, -6.766773e-003, 2.535176e-002, -2.939657e-002, 7.285852e-002, -1.759883e-002, 2.658966e-002, 5.228906e-002, -2.867436e-002, -1.883301e-002, 4.773065e-002, -1.277015e-002, -2.041023e-002, -5.093360e-003, 7.207753e-002, 4.418921e-002, -2.999005e-002, 1.189669e-002, -1.761282e-002, 4.183133e-002, -4.033098e-002, 1.551026e-002, 1.477012e-002, 7.499585e-003, -1.949047e-002, -1.580871e-002, -4.719934e-002, -2.993967e-002, -1.137849e-001, 1.056242e-001, -8.740161e-002, -6.812119e-002, -3.666942e-002, -9.458515e-003, 1.101205e-002, 2.331139e-003, 7.554702e-003, 3.500351e-002, -1.363173e-001, -2.766870e-002, -8.965601e-002, -6.142957e-002, -4.853324e-003, -1.653599e-002, -1.026777e-002, 6.087285e-003, 5.346067e-003, 5.270292e-003, 2.432908e-002, -1.347257e-002, 3.498438e-002, -4.686431e-002, -1.227624e-002, -3.273547e-003, -8.184737e-005, 8.998617e-003, 6.098946e-003, 1.215370e-002, -1.364098e-003, 5.022195e-003, -3.352494e-003, -1.935544e-002, -2.223330e-002, -1.999502e-004, 4.324681e-003, 1.424427e-002, 3.536717e-004, 2.838340e-004, 3.295829e-003, -4.440355e-003, 7.056574e-003, -3.307290e-002, -6.433610e-003, -3.367067e-003, 7.613698e-003, -1.183127e-002, 5.713089e-003, -1.021131e-003, -1.021131e-003, 5.713089e-003, -1.183127e-002, 7.613698e-003, -3.367067e-003, 3.422541e-002, 1.087821e-001, -1.152863e-001, -1.489041e-003, 5.647755e-002, 1.329008e-002, -8.369745e-003, -5.783465e-002, 3.857841e-002, -2.155799e-002, -6.273727e-002, 4.998114e-002, 1.647434e-002, -5.575421e-002, -1.013314e-002, -2.425271e-002, -1.308041e-002, -2.015025e-002, 4.232365e-003, -4.811195e-002, 1.122210e-001, -9.241698e-002, -7.291736e-002, -8.649423e-002, 6.031430e-002, 1.210277e-003, -5.114503e-003, 1.797964e-003, 3.627438e-002, 1.729572e-002, -1.723771e-002, 2.776586e-002, 4.661883e-002, -7.449714e-002, 1.037501e-002, 3.504812e-002, 1.587969e-003, -7.956840e-003, 4.184587e-003, 1.050497e-003, -4.949847e-003, 4.167129e-003, -2.677487e-002, -6.255266e-002, 5.016655e-002, -4.985460e-004, 3.899032e-003, -2.527095e-003, -5.060073e-003, 2.496565e-003, 3.286776e-003, 1.571770e-002, -8.371919e-003, -6.195255e-003, -2.381116e-002, -3.002015e-002, -3.255663e-002, 4.535334e-003, -4.437662e-003, 7.794851e-004, 3.611095e-003, 5.996013e-003, 4.430762e-003, -9.994639e-003, -7.602409e-003, -2.801328e-002, 6.300416e-003, -6.977775e-003, -1.719121e-002, -1.372235e-002, -1.206243e-002, 4.180135e-003, 4.180135e-003, -1.206243e-002, -1.372235e-002, -1.719121e-002, -6.977775e-003, 5.468565e-002, -1.120729e-001, 1.186693e-002, -3.220332e-002, -2.288913e-003, 1.441585e-002, 3.366490e-002, -8.568925e-003, -9.876037e-003, -5.117712e-002, 2.111803e-003, 7.898040e-002, 7.678889e-002, 3.882871e-002, -3.051358e-002, -1.051862e-002, -1.532550e-002, -1.137143e-002, -2.960535e-002, -2.428474e-002, -8.147080e-002, -3.750916e-002, -4.963504e-002, 1.420439e-002, -4.912656e-003, -1.193879e-002, -1.304117e-002, -7.796946e-003, 2.647579e-002, 1.024317e-002, 3.838135e-003, -1.320034e-002, -1.350969e-002, 2.753459e-002, -9.431883e-003, 4.718511e-002, 3.025914e-002, -1.042856e-002, -1.453403e-002, -8.232248e-004, 1.170746e-002, 1.063664e-002, -1.775089e-002, -2.429417e-002, -1.002715e-001, -3.459753e-002, 5.937096e-003, 3.223183e-002, 1.985973e-002, 9.236776e-003, 1.020896e-002, 3.627849e-003, 1.404453e-002, 1.147623e-002, 2.453800e-002, -6.837321e-002, 3.512389e-004, -1.189096e-002, 1.148243e-002, 1.683081e-002, 1.837336e-002, 4.363519e-003, 1.446964e-002, 7.768212e-003, 1.173519e-002, 5.117392e-003, 1.177738e-002, 5.585371e-003, -3.497308e-002, 8.932390e-003, 1.713458e-002, -8.791369e-003, -8.791369e-003, 1.713458e-002, 8.932390e-003, -3.497308e-002, 5.585371e-003, -2.519023e-003, -5.683913e-002, 9.809981e-002, -4.901115e-002, -1.006846e-001, -2.026521e-002, -1.025223e-002, -1.690819e-002, -2.763600e-002, 7.257640e-002, -1.566594e-003, 7.259743e-002, -2.457200e-002, -1.787710e-002, -2.723295e-002, -2.906050e-002, -3.548006e-002, -5.949633e-003, -4.037632e-002, -5.154231e-002, -7.564789e-002, -2.226781e-002, -5.245468e-002, -1.478527e-001, 5.348551e-002, 1.577299e-002, -6.629323e-004, 8.170237e-004, 1.828811e-003, -7.720890e-003, 3.563057e-003, 8.710800e-004, 2.422025e-002, 4.691497e-003, -2.557265e-002, -1.256425e-002, 2.823338e-002, 1.031637e-002, 6.228733e-003, -7.860978e-004, -4.626278e-003, 7.081462e-003,

© ISO/IEC 2004 — All rights reserved


Copyright International Organization for Standardization
Provided by IHS under license with ISO
No reproduction or networking permitted without license from IHS
Not for Resale

9.466410e-003, -2.519108e-002, -1.084539e-001, 1.555633e-002, 7.117456e-003, 1.913363e-002, 1.074269e-002, 7.473700e-003, 1.395062e-003, 1.729215e-002, 2.381224e-002, 1.328731e-002, -7.927778e-003, -7.637765e-002, -8.375379e-003, 5.485016e-004, 6.345284e-003, 1.519860e-002, 1.032555e-002, 1.682485e-003, 1.275071e-002, 6.734051e-003, -8.016453e-003, -1.949993e-002, -2.845367e-002, -3.080779e-002, -5.959084e-002, -5.959084e-002, -3.080779e-002, 2.293561e-002, -2.294868e-002, -3.620239e-002, -7.139329e-003, -5.957096e-002, 9.736316e-003, -5.927629e-002, -1.671859e-002, -6.635366e-003, -2.365124e-002, 6.274294e-002, 4.710658e-003, 3.270452e-003, 3.270452e-003, 4.710658e-003, -2.598708e-002, -6.821098e-004, -6.893695e-003, -8.675783e-003, -2.952611e-002, 2.146438e-002, -1.347856e-002, -4.918001e-003, 1.235929e-003, 3.862539e-003, 9.278811e-003, -9.210292e-002, -2.426335e-002, -2.426335e-002, -9.210292e-002, 4.633893e-003, -3.438152e-002, -4.453443e-003, -6.067859e-003, -9.975123e-003, 1.103132e-002, 5.254676e-003, 5.623898e-003, -1.071692e-003, 4.544423e-003, 6.400899e-003, -9.135321e-003, -1.951906e-002, -1.951906e-002, -9.135321e-003, 8.615467e-002, 1.024212e-002, -6.437152e-003, -8.103686e-003, 4.362109e-002, 1.056792e-002, -7.199767e-003, -6.874127e-003, -1.773895e-003, -2.032640e-002, -1.147740e-002, -4.045988e-002, 2.088526e-002, 2.088526e-002, -4.045988e-002, -4.906278e-002, -6.825472e-003, 2.926571e-002, 1.678719e-002, 2.345224e-003, 3.851395e-004, 9.298747e-003, 4.296603e-003, 1.011231e-002, 6.104711e-003, -3.401631e-002, -4.954510e-002, -5.361554e-004, -5.361554e-004, -4.954510e-002, -5.383439e-002, -1.626515e-002, 1.011174e-002, 1.771075e-003, -2.565750e-002, -2.541204e-002, -1.345765e-002, -6.913449e-003, -2.492923e-003, 2.528719e-002, -2.744132e-002, -1.051334e-001, -2.588470e-002, -2.588470e-002, -1.051334e-001, -3.551397e-002, -5.345878e-002, 2.516863e-003, -1.339801e-003, -7.282489e-003, -3.657040e-002, 3.036622e-002, 2.015612e-003, 7.450604e-003, -1.711512e-002, 5.327998e-003, 1.860852e-002, -1.613812e-002, -1.613812e-002, 1.860852e-002, -1.443462e-001, -2.261607e-002, -2.075620e-002, -4.722278e-003, -4.548895e-002, -3.403222e-002, -1.284674e-002, -1.204644e-002, -8.185955e-003, -4.251203e-003, 1.580170e-002, -2.057189e-002, 5.091031e-002, 5.091031e-002, -2.057189e-002, 4.256311e-002, 2.590339e-002, 2.182550e-002, 5.587331e-003, 1.985237e-002, 8.696671e-003, 7.593479e-003, 2.429494e-003, 1.473382e-002, 6.322153e-003, 5.424684e-002, 9.774305e-002, 1.428491e-002, 1.428491e-002, 9.774305e-002, 3.797107e-002, 3.463400e-002, -1.234551e-005, -3.837020e-003, 9.382060e-003, 3.042476e-002, 2.023519e-002, -1.491848e-003, 3.187830e-005, -1.680363e-003, 2.583570e-002, 2.764135e-002, 3.767021e-003, 3.767021e-003, 2.764135e-002, 5.036991e-002, 7.132719e-003, -8.842642e-004, -6.904393e-004, 2.363122e-002, 2.722447e-002, -3.356300e-003, 3.043642e-003, 1.221555e-002, 1.304489e-002, -2.953659e-002, -4.525106e-002, -1.234692e-002, -1.234692e-002, -4.525106e-002, -9.485197e-003, 9.522124e-003, -1.919911e-002, 4.201388e-003, 6.766528e-004, -4.852419e-004, 8.063297e-003, 9.402867e-004, 2.203243e-003, 4.278966e-004, 9.975636e-003, 4.158952e-002, -1.300168e-002, -1.300168e-002, 4.158952e-002, -3.259598e-002, -6.184134e-002, -3.098882e-002, -1.205885e-002, -3.293700e-002, -5.258398e-002, -6.970068e-003, -9.383290e-003, 1.610913e-003, -1.731678e-002, -7.372376e-002, -2.584185e-002, -6.579875e-003, -6.579875e-003, -2.584185e-002, -4.239410e-002, -1.483991e-002, -1.707618e-002, -2.513143e-002, -4.527382e-002, -5.927249e-003, 4.649026e-003, -2.669261e-004, -1.696044e-003, -6.560254e-003, 2.679850e-002, -8.486647e-003, -3.133280e-003, -3.133280e-003, -8.486647e-003, -6.232428e-002, -1.971001e-002, -5.981144e-003, -1.498331e-002, -1.499691e-002, -1.590897e-002, 1.701858e-003, 5.276798e-004, 4.168135e-003, 6.405923e-003, -1.132023e-002, 5.075910e-002, 1.412544e-003, 1.412544e-003, 5.075910e-002, -3.853836e-002, 1.862199e-002, -1.704730e-002, -1.927660e-002, -2.508673e-002, -6.957382e-002, 1.214993e-002, 4.542930e-003, -8.909904e-003, -1.751000e-002},
{8.059017e-005, -3.371649e-003, -3.634574e-003, -2.083281e-003, -9.126089e-003, -3.218618e-003, -1.097139e-002, 4.887842e-003, -1.126818e-002, 5.159871e-002, 7.113519e-004, 2.911216e-002, 7.113519e-004, 5.159871e-002, -1.126818e-002, 4.887842e-003, -1.097139e-002, -3.218618e-003, -9.126089e-003, -2.083281e-003, -3.634574e-003, -3.371649e-003, 4.679403e-003, -1.247675e-003, -7.934463e-003, -2.764818e-002, 1.596871e-003, -4.369586e-002, 2.517694e-003, -1.574635e-002, 7.130938e-002, 2.779811e-004, 3.691420e-002, -2.401371e-003, -1.221794e-002, 2.248216e-002, -7.253243e-002, -8.826580e-003, 6.090489e-003, -3.516621e-002, 2.918752e-002, -3.658655e-002, 3.376128e-003, 1.621458e-003, -2.840935e-003, -1.365537e-002, 7.270065e-003, 1.897705e-002, 2.385871e-002, -2.278470e-002, -1.542949e-002, 1.772997e-002, 2.359799e-002, 2.877085e-002, -5.564046e-002, -6.231617e-002, 2.559383e-002, -5.562244e-004, -4.988998e-003, 1.405206e-002, 2.439319e-002, 3.155676e-002, 1.068082e-002, 2.464165e-002, 4.714465e-004, -1.097496e-002, -2.936191e-002, -1.133818e-002, -1.387571e-002, 4.921956e-002, 1.687462e-002, -6.100098e-002, 8.988077e-003, 6.816469e-002, -1.615963e-002, -1.106615e-002, -6.508898e-002, -1.076791e-001, -5.002366e-002, 1.518489e-002, -1.311882e-002, 3.143011e-002, 3.574740e-002, 7.152929e-002, 4.071757e-002, 1.992607e-002, -1.393368e-003, 1.701882e-002, -1.755599e-003, 2.056039e-002, -2.653862e-002, -3.519343e-002, 7.317217e-002, -4.445137e-002, -1.545546e-002, 4.247870e-002, 6.304667e-002, -1.201872e-002, -7.763937e-002, -3.085341e-003, -1.058069e-002, -4.481697e-003, 2.479775e-002, 4.911626e-003, 3.406597e-002, 1.677953e-002, 2.898024e-002, 2.619283e-003, -8.056448e-003, -1.070241e-002, 2.967517e-002, -6.475922e-003, 7.962264e-003, -4.556395e-002, -9.995303e-003, -1.972179e-002, -7.459594e-003, -3.553178e-002, 5.387021e-002, -9.513677e-003, -


© ISO/IEC 2004 — All rights reserved

--`,,```,,,,````-`-`,,`,,`,`,,`---

Copyright International Organization for Standardization
Provided by IHS under license with ISO
No reproduction or networking permitted without license from IHS
Not for Resale

8.627462e-002, -1.464872e-002, -1.465567e-002, 6.420500e-002, 2.004112e-002, 5.450045e-002, -4.702903e-002, 1.776876e-002, -5.391329e-002, 9.960910e-003, -4.656968e-002, 3.229707e-003, -7.051643e-003, -3.285400e-002, 9.912816e-003, -2.866373e-002, 1.165982e-002, 5.438791e-002, -7.829982e-004, 4.036352e-002, -3.631318e-002, -7.501584e-002, -9.368246e-003, 1.356257e-002, -2.737712e-002, -1.359814e-002, 9.301812e-002, 2.269657e-002, -8.289466e-003, -3.041320e-002, -1.376050e-002, 3.353954e-002, -8.714156e-003, 1.874801e-002, 4.957863e-002, 7.741605e-003, 3.996916e-003, -3.308041e-002, 2.770330e-002, -3.712958e-003, -4.177815e-002, -7.956516e-002, -5.435023e-002, -4.938757e-002, -4.542122e-002, 1.022841e-002, 3.325618e-002, -1.069424e-002, 4.049298e-002, -1.311752e-002, -6.793830e-002, -4.975215e-002, 5.108287e-002, 9.164240e-002, -1.898068e-003, -1.893030e-003, -7.672860e-003, -5.625957e-002, -2.604007e-002, 2.397959e-002, 5.450930e-002, 4.515098e-002, 4.276647e-002, -7.547063e-002, -7.880039e-002, -3.775303e-002, -2.654697e-002, 1.114057e-002, -1.482868e-003, 1.918906e-002, 2.692623e-002, 7.310941e-002, 4.672683e-002, -9.261107e-002, 7.987633e-002, 2.904716e-002, 1.584889e-002, -1.757101e-002, 2.951166e-002, 3.001077e-002, -1.828877e-002, 5.074733e-002, -4.666725e-002, -5.395916e-002, 2.987930e-003, 2.083426e-002, 8.947771e-003, -3.143095e-003, -1.460312e-002, 4.745525e-003, 1.038517e-002, -2.445056e-002, -7.952351e-003, -1.721926e-002, 1.318612e-002, 3.172127e-002, -1.266506e-001, 3.753984e-002, -2.086412e-002, -1.213978e-002, 2.287365e-002, 9.908201e-002, 4.826894e-003, -8.312195e-003, -6.158277e-002, 8.898231e-002, 5.947687e-002, 1.190871e-002, 1.720751e-002, -1.049785e-002, -3.819243e-003, -1.407830e-002, 4.862231e-003, -4.508195e-003, -4.104314e-002, -3.390933e-002, -5.466718e-002, 1.533482e-002, -6.090171e-002, 6.253524e-002, 6.404726e-002, 5.108370e-002, -4.172663e-002, 3.502305e-002, 2.488548e-002, -3.038808e-002, 3.024706e-003, 3.613125e-002, 4.039493e-002, -6.961609e-004, 7.239464e-003, 1.709971e-002, -5.788317e-003, -2.825348e-003, -1.086555e-002, -2.044757e-002, -1.706971e-002, -1.273898e-002, -5.585644e-003, 1.129992e-002, 2.350950e-002, 5.660046e-002, -1.344158e-002, 8.046696e-002, 1.559707e-002, 4.001622e-003, -6.784999e-002, -9.752202e-002, -2.323655e-002, 2.860327e-002, 2.785907e-002, 4.067481e-003, 1.951387e-002, -3.734593e-004, 1.310228e-003, -7.303840e-003, 5.177128e-003, -1.290075e-002, -4.146256e-003, -1.807562e-002, -1.320266e-002, 1.180807e-002, -1.547099e-002, -1.876124e-002, -7.717908e-002, 7.399850e-002, -4.496826e-002, 1.972279e-005, -1.768416e-002, -5.620377e-002, -8.283731e-004, 3.638130e-002, -3.299331e-003, 6.321303e-003, 9.812180e-003, -2.817862e-003, 2.877130e-003, -8.871944e-003, -9.663837e-003, -7.840059e-003, -3.603430e-003, 1.507172e-002, 6.680370e-003, 2.302202e-002, -2.007703e-002, -3.267120e-003, -5.246696e-002, -6.275693e-003, 3.422109e-004, -9.330485e-004, 1.024648e-002, 1.008720e-002, -3.332794e-003, 8.910147e-003, 8.910147e-003, -3.332794e-003, 1.008720e-002, 1.024648e-002, -9.330485e-004, 3.070166e-003, 1.299171e-002, 3.477248e-002, -7.724362e-002, 9.266578e-002, 5.606520e-002, 1.771368e-002, 2.731949e-002, 2.014778e-002, 2.337026e-002, -1.310905e-002, 5.876217e-002, -7.022934e-002, 2.092738e-002, 8.457914e-002, 3.663195e-002, -8.381871e-003, 1.627384e-002, -2.946458e-003, 5.567766e-004, 1.958212e-002, -2.176625e-001, 7.884134e-003, 1.170921e-001, 5.110131e-002, 5.691047e-002, -1.029683e-002, -1.209953e-002, 2.231097e-003, 1.181248e-002, 4.095554e-003, 2.215729e-002, 5.823621e-002, -1.502522e-002, -3.070695e-002, 9.285219e-002, 2.591794e-002, -1.975624e-002, -1.210263e-002, 1.119019e-003, 1.318386e-003, -5.169400e-004, 1.475714e-002, 4.332717e-002, -5.843282e-002, -1.050480e-002, 4.569042e-002, 3.218838e-002, 1.855911e-002, 3.313692e-003, -4.234346e-003, 4.947601e-004, 3.470313e-003, 9.721181e-003, 8.093613e-003, -2.383415e-002, -6.586811e-003, -1.057996e-002, 1.540263e-002, 1.283861e-002, 6.647948e-003, -3.205603e-003, 3.556837e-003, 5.219470e-003, 4.346108e-003, -1.476933e-002, 1.272188e-002, -2.172878e-004, 9.045230e-004, 3.970493e-002, -4.252608e-003, -1.520725e-003, -1.520725e-003, -4.252608e-003, 3.970493e-002, 9.045230e-004, -2.172878e-004, -1.673670e-002, -9.839769e-004, 3.054089e-002, -1.301594e-002, 3.758025e-002, 9.657801e-003, 4.372392e-002, 6.556566e-002, -2.272547e-002, -7.717291e-002, 9.527200e-003, 3.856022e-002, -1.017367e-001, -1.985347e-002, -2.777293e-002, -8.245025e-003, -1.281538e-002, 1.433719e-002, 2.099651e-002, 2.393661e-002, -9.270557e-003, -4.302982e-002, -1.329919e-002, -5.357342e-002, -1.214114e-002, -9.563012e-004, -6.533153e-003, -2.789581e-003, 3.010263e-003, 3.162124e-002, 5.050660e-002, 2.952344e-003, 3.101279e-002, 5.126635e-002, 2.606841e-002, -1.372621e-002, 1.530145e-003, 3.045911e-003, -1.027482e-002, 6.427547e-003, 3.129063e-002, 3.375820e-002, -6.964327e-003, 8.945945e-003, -4.417528e-002, -2.747868e-003, -6.638202e-003, 1.914289e-003, 5.349071e-003, -8.057028e-003, 1.571344e-002, 7.581274e-003, -1.448577e-002, 1.729726e-002, -1.501135e-003, -5.453457e-002, -4.144434e-002, 7.245233e-004, 1.214592e-002, 5.727372e-003, 3.849482e-003, 1.051960e-002, -5.521310e-003, 9.123502e-003, 1.704111e-002, -2.259485e-002, -1.133679e-002, 1.399857e-003, 1.204045e-002, -2.479733e-003, 6.100184e-003, -6.600556e-002, -6.600556e-002, 6.100184e-003, -2.479733e-003, 1.204045e-002, 1.399857e-003, 7.462380e-004, 6.974178e-002, 6.117977e-002, -5.362258e-003, -5.590022e-002, -3.403409e-002, -6.244842e-002, -9.612941e-002, -1.335819e-002, -6.144814e-002, 1.260180e-003, 3.467203e-002, 2.689718e-002, -1.364892e-001, -3.904975e-002, -2.513337e-002, -3.459687e-002, -7.819939e-002, -8.818056e-002, -1.121064e-002, -1.816497e-002, 7.497811e-002, 4.022189e-003, -1.311065e-002, 4.157845e-002, -2.468765e-002, -1.374180e-002, -1.224645e-002, -1.042877e-002, 1.285024e-002, -6.593812e-003, -

© ISO/IEC 2004 — All rights reserved


Copyright International Organization for Standardization
Provided by IHS under license with ISO
No reproduction or networking permitted without license from IHS
Not for Resale

4.352695e-004, -9.273094e-002, -6.721623e-002, 8.527435e-003, 3.613728e-003, -5.273472e-003, -3.080763e-002, -7.207729e-003, -6.562038e-003, -1.416264e-002, -2.275448e-002, -3.161617e-002, -1.881248e-002, -1.098179e-001, 1.977181e-002, 1.805929e-002, 1.182302e-002, -4.700041e-003, -5.321888e-003, -7.128803e-003, -1.306357e-002, -1.538486e-002, -3.140833e-002, -3.305421e-003, -5.132427e-002, -2.164918e-002, -2.526297e-004, 1.310960e-002, 7.066852e-003, -6.912634e-003, -9.510624e-003, -1.249992e-002, -1.325553e-002, -1.713595e-002, -2.552123e-002, -1.646714e-003, 1.915910e-002, 6.544310e-003, -1.596414e-002, -1.612504e-002, -6.326381e-002, -6.326381e-002, -1.612504e-002, -1.596414e-002, 6.544310e-003, 1.915910e-002, -1.967569e-002, 8.165671e-002, -9.561253e-002, 1.367956e-001, 2.263060e-002, -1.942892e-002, 2.911583e-002, 5.718189e-002, 1.016672e-001, -3.469183e-002, -3.006421e-002, 1.128152e-002, 2.044446e-002, -1.502563e-001, -4.874593e-003, -5.284516e-003, -4.093768e-002, 1.736090e-002, 3.884776e-002, 6.396205e-003, -1.140496e-001, 1.398389e-003, -2.840878e-002, -1.144184e-001, 7.297390e-003, 2.440214e-002, -4.207087e-002, -2.024261e-002, 2.701198e-002, 2.986244e-002, 3.488057e-004, 3.680837e-002, -2.421009e-002, -1.851489e-002, 4.199389e-002, -1.562057e-002, -3.060077e-002, -2.178708e-002, -2.493516e-002, 1.620417e-003, -1.592791e-003, -4.595051e-003, 1.983275e-002, 2.279096e-002, -8.089578e-002, 1.963387e-002, -3.176606e-002, -3.044715e-003, -1.129021e-002, -9.532070e-003, 1.222250e-003, -1.898379e-002, -1.558742e-002, 3.747845e-003, 4.031716e-002, -1.843556e-002, -1.434075e-002, -3.444528e-003, -1.017578e-002, -9.818830e-003, -6.506152e-003, -9.222946e-003, -1.723088e-003, 8.104151e-003, 2.206502e-002, -4.681829e-003, -4.514911e-002, -4.408367e-003, 6.187828e-003, 6.187828e-003, -4.408367e-003, 2.956508e-002, 2.604738e-002, 5.077908e-002, 9.295673e-003, 2.939956e-002, 6.676626e-003, 3.800285e-002, 4.652950e-003, 6.162464e-003, 1.776625e-002, -4.098188e-002, 1.908802e-002, 1.407635e-002, 1.407635e-002, 1.908802e-002, -3.593193e-002, -7.951641e-003, -1.199370e-003, 3.482563e-003, -5.948640e-003, -3.963984e-002, 2.810522e-003, 6.296595e-003, 4.785107e-003, 3.606161e-003, 4.969521e-002, 2.276152e-002, -5.214647e-003, -5.214647e-003, 2.276152e-002, -6.462214e-002, -5.662623e-003, -2.734974e-003, 1.205490e-002, 2.982007e-002, -4.080874e-002, -8.654311e-003, -3.631148e-003, 5.452932e-003, 1.345560e-003, -7.104742e-002, 1.010873e-002, 2.769392e-002, 2.769392e-002, 1.010873e-002, 2.808587e-002, -5.869870e-003, 1.198487e-002, 2.398307e-002, -4.807503e-002, 1.463585e-002, -1.911740e-003, 3.679154e-003, 1.360942e-002, -3.779787e-003, 7.133689e-002, -2.110787e-002, 7.265071e-003, 7.265071e-003, -2.110787e-002, -4.383973e-002, -2.777635e-002, 1.346641e-002, 4.150204e-003, -4.687115e-002, -1.011561e-002, -6.223094e-003, 1.102940e-003, 4.929827e-003, -1.216933e-002, 1.513631e-002, -1.909126e-002, 4.268005e-004, 4.268005e-004, -1.909126e-002, 8.857657e-002, -4.599319e-003, 3.102403e-003, -2.429432e-004, 6.061609e-003, 4.628444e-002, 1.234036e-002, -3.694966e-003, 2.082823e-003, 1.375769e-002, 2.427592e-002, -5.138106e-002, -6.665370e-003, -6.665370e-003, -5.138106e-002, 1.153651e-001, -1.452204e-002, 8.742804e-004, 8.681449e-004, -2.570592e-002, 3.823330e-002, -2.932449e-004, 3.447005e-004, 9.623529e-004, -4.637491e-003, 9.798178e-003, 4.185919e-003, -1.318105e-002, -1.318105e-002, 4.185919e-003, 1.006095e-002, -4.448255e-002, -8.601057e-003, 2.373050e-002, 9.376809e-003, 9.353034e-003, 7.985688e-004, -3.166453e-003, 1.270479e-002, -1.196759e-002, 4.191489e-005, 1.009566e-003, 2.703551e-002, 2.703551e-002, 1.009566e-003, 2.586038e-002, -7.533701e-003, -1.133755e-002, -2.047463e-002, 3.244433e-002, 4.800547e-003, 1.906870e-003, -7.347078e-004, -6.684599e-003, -4.124069e-003, -2.290106e-002, 5.384920e-002, 1.170297e-002, 1.170297e-002, 5.384920e-002, -7.312049e-002, -7.724058e-003, -8.729096e-003, -9.302793e-003, -9.227050e-004, 2.958784e-002, 5.077859e-003, -1.439060e-002, -1.487083e-003, 5.789243e-003, 1.412549e-003, 6.335283e-002, -9.115162e-003, -9.115162e-003, 6.335283e-002, -9.094891e-002, 2.843845e-003, 3.773188e-003, -2.967342e-003, -1.894080e-002, 3.394419e-002, 7.459495e-004, -1.246985e-003, -7.855761e-003, 9.161270e-003, -8.785155e-003, 1.436440e-003, 1.761071e-002, 1.761071e-002, 1.436440e-003, 1.373088e-002, -3.608768e-002, -4.268174e-003, 1.592178e-002, 2.153656e-003, 2.912980e-003, -6.468394e-003, -3.000335e-003, 3.032778e-003, 8.785763e-003, 7.245562e-004, 2.943953e-002, -2.648895e-003, -2.648895e-003, 2.943953e-002, 5.183546e-002, -1.247718e-003, -6.576927e-003, -3.913241e-002, -2.382733e-002, -2.946405e-002, 7.474226e-003, -1.351794e-002, -1.553373e-002, -6.393677e-003, 1.079780e-002, 5.522814e-002, -8.409936e-003, -8.409936e-003, 5.522814e-002, 7.380175e-002, 1.294119e-002, -3.274117e-003, -9.688803e-004, -6.507817e-003, -1.642738e-002, -5.866816e-003, -6.955754e-003, -1.200596e-002, -1.907229e-002, -7.259407e-003, 1.485791e-002, -1.628922e-002, -1.628922e-002, 1.485791e-002, 3.075671e-002, -4.426165e-002, -4.128236e-003, 9.894424e-003, 1.557529e-002, -1.140575e-002, -1.964701e-002, -1.306995e-002, -3.095426e-003, -5.055788e-003, 1.298530e-002, 2.529427e-002, 2.627970e-002, 2.627970e-002, 2.529427e-002, -2.299933e-002, -1.673261e-002, -1.148334e-002, 3.094418e-002, -2.147363e-002, -4.022432e-003, -4.032404e-003, -6.990499e-003, -2.972411e-003, 1.640095e-002}
};

mean vector $m_2^f$ [80]={


© ISO/IEC 2004 — All rights reserved

Copyright International Organization for Standardization
Provided by IHS under license with ISO
No reproduction or networking permitted without license from IHS
Not for Resale

8.856563e+003, 1.632033e+003, -1.672782e+004, -1.350141e+003, 1.663818e+003, -1.690344e+003, -3.632479e+003, -3.474869e+003, 2.028732e+002, -8.886800e+002, 1.516701e+003, -2.996908e+002, 3.864415e+002, 1.715677e+003, 4.848304e+002, 3.514423e+002, -9.692615e+002, 1.060577e+003, -7.209549e+001, 9.842032e+002, 1.015334e+003, 1.732328e+002, -7.402121e+002, -8.453756e+002, 7.084131e+002, 3.634276e+002, 7.911489e+002, 8.488988e+002, -6.022190e+002, -8.460964e+002, 1.915629e+002, -5.226312e+002, 2.838995e+002, -7.005390e+002, 4.497977e+001, -1.265386e+002, 9.536637e+001, 3.776926e+002, -4.043402e+002, -1.534774e+002, -2.461882e+002, -1.415842e+002, 4.643328e+002, 4.733837e+002, -5.978961e+001, -2.167606e+002, -3.244136e+002, 1.875698e+002, -7.591345e+001, 1.774927e+002, 2.159105e+002, 3.216019e+002, -2.875733e+002, 2.007898e+002, -9.238315e+001, 3.540450e+002, 1.589904e+002, 1.892557e+001, -3.096904e+002, 1.753250e+002, -6.160660e+001, -2.856556e+002, -3.986973e+002, 6.681021e+002, -2.196676e+002, 4.168352e+002, 6.481443e+001, -4.237608e+002, 7.753285e+002, -1.791177e+002, -9.684631e+001, -2.665068e+002, 1.323318e+002, 6.376936e+002, 3.141366e+002, -4.468596e+002, 3.654987e+002, -1.916505e+002, 2.905446e+002, 2.558425e+001};

LDA basis matrix $\Psi_3^f$[63][150]={
{7.341717e+000, -6.947386e-001, 1.754191e-001, -4.735491e-001, 7.413217e-001, 7.524300e-001, 2.218233e-001, -9.015337e-001, 1.920689e-001, -1.260849e-001, -7.263459e-002, -4.371082e-001, 7.883451e-001, -5.354485e-001, -4.519987e-001, -8.169121e-001, -7.525978e-001, 1.178071e+000, 1.852410e-001, -4.959227e-001, 4.942928e-001, 3.070373e-002, 3.539083e-001, 6.601743e-001, 1.033728e-001, 9.988623e-001, -4.937673e-001, -1.167819e+000, 2.086357e-001, -9.179992e-002, -5.134727e-001, -9.516434e-001, -2.982728e-001, 9.730006e-001, -6.542326e-001, 4.928686e-001, -7.634354e-001, 3.439391e-001, 1.633009e-001, 2.768363e-001, -6.729173e-001, -4.103932e-001, 9.968461e-002, 1.001932e+000, -2.796653e-001, -4.924610e-002, -5.052880e-001, 4.766723e-003, 3.677937e-001, 3.117094e-001, -4.454321e-002, 3.167901e-001, 4.732945e-001, 6.000384e-002, -5.493614e-001, -2.468821e-001, 5.355586e-001, 4.759846e-001, -1.783646e-001, -1.221762e-001, 8.444486e-002, 9.498981e-002, 4.059442e-001, 2.962899e-001, -8.538010e-001, 8.707984e-001, -3.772391e-001, 4.371165e-001, 4.135579e-001, 3.067054e-001, 8.660401e+000, -1.603471e+000, 1.137284e+000, 2.279241e-001, 4.823354e-001, 7.012802e-001, -4.738441e-001, 4.609003e-001, -1.018900e+000, -2.799838e-001, 4.169036e-001, -5.765978e-001, 1.791936e-001, -9.108565e-001, 6.886177e-001, -7.551575e-001, 2.099759e-001, 3.477022e-001, -6.147574e-001, -1.023133e+000, -2.760196e-001, 9.336710e-001, 8.135593e-001, 5.485939e-001, 4.503855e-001, -7.240810e-001, 2.282980e-001, 2.385782e-001, -5.853248e-001, 5.555193e-001, 2.378622e-001, -5.243195e-001, 1.810923e-001, 3.761428e-001, 1.420542e-001, -1.374948e-001, -1.685352e-001, -1.823620e-001, -2.039471e-001, 6.166886e-001, 5.681112e-001, -6.510440e-001, -2.416389e-001, -3.349323e-001, 4.121466e-001, -3.976709e-001, 3.365037e-001, 3.692735e-001, -2.153830e-001, -6.038492e-001, -1.513301e-001, -3.481761e-001, -6.819469e-001, 1.263311e-001, -3.707843e-001, -4.131304e-001, -1.301918e-002, 6.387266e-001, 2.433628e-001, 1.133754e-001, 7.273349e-001, 4.679466e-002, -6.791874e-001, -4.513386e-001, -2.593808e-001, 9.574050e-002, -4.752020e-001, -1.791815e-002, 3.226075e-001, 1.469997e-001, 5.648577e-002, 4.430326e-001, 1.246132e-002, 1.899622e-001, 5.989990e-001, 4.679515e-001, -2.199185e-001, 3.875707e-001, -6.250988e-001, -3.713717e-001},
{-3.554909e+000, -1.022025e+001, -4.988669e+000, 3.160257e+000, -1.836365e-001, 1.470552e+000, -2.798663e-001, 6.640377e-001, -1.404832e-001, -2.567054e+000, -7.332004e-001, 3.870221e-001, -4.564389e-001, -1.259853e+000, 4.805348e-001, -1.176482e+000, 1.946191e+000, 3.405429e-001, -1.302506e+000, 2.225480e-001, 1.018275e+000, 1.363075e+000, 1.723759e+000, 1.360632e+000, -7.153431e-001, 9.342579e-001, -2.512401e+000, 1.007940e+000, 5.301693e-001, 1.015195e+000, 2.152221e-001, -8.969695e-001, -7.195077e-001, 4.370081e-001, -1.129122e+000, -4.767555e-001, -7.899032e-001, 2.225737e+000, -5.674624e-001, 1.226221e+000, -1.651417e-001, 2.845710e-001, -7.713499e-002, -7.271538e-001, 7.054591e-002, -4.061427e-001, 4.868232e-001, -7.077455e-001, -7.257164e-001, 2.213577e-001, 7.692076e-001, -3.597254e-001, 2.688764e-001, -5.837408e-001, -1.229391e+000, 5.600144e-001, 5.581548e-001, -2.892611e-001, 2.535900e-001, 8.501825e-001, -4.907726e-001, -6.695275e-001, -2.572407e-001, -6.540446e-001, -1.346223e+000, 8.010804e-001, -1.052463e-001, 1.554634e-001, 3.713161e-001, 1.122161e+000, 1.110946e+000, -1.111926e+001, 7.633698e+000, -8.916182e-001, 1.187145e+000, -4.136431e+000, 2.547753e+000, 2.036322e+000, 1.490927e+000, 1.311900e+000, 3.696410e+000, 2.350764e+000, 3.223562e-001, 1.082099e-001, -7.562803e-001, 8.964407e-001, -7.862687e-001, -5.318206e-001, 6.441302e-001, -6.880044e-001, 2.861806e-001, -1.049860e+000, -1.458798e+000, 1.431975e+000, 2.821358e-001, 1.111068e+000, -9.657237e-001, -1.052308e+000, -1.489635e+000, 3.985470e-001, 7.284918e-001, 8.847137e-001, -1.191760e+000, 7.391704e-002, 4.406012e-001, -6.485763e-001, 7.711295e-001, 7.670338e-001, 1.483073e+000, -2.555372e-001, 2.344865e-001, 2.429991e-001, -1.355672e+000, 8.928011e-002, -6.410976e-001, -8.704152e-001, 5.412478e-002, 6.405060e-001, 1.150534e+000,

© ISO/IEC 2004 — All rights reserved


Copyright International Organization for Standardization
Provided by IHS under license with ISO
No reproduction or networking permitted without license from IHS
Not for Resale

1.863576e+000, 1.371323e-001, -6.803817e-001, -7.948208e-002, -4.707904e-001, -6.693165e-001, 8.188943e-001, -4.501976e-001, -7.323368e-002, 3.470905e-001, -6.516062e-001, 6.782360e-001, -1.468643e-001, 1.597465e-001, 1.462326e+000, 6.388446e-001, -2.720612e-001, -3.743645e-001, -1.723780e-001, -8.848709e-001, 8.110566e-001, -1.113463e+000, 3.417352e-002, -6.663521e-001, 1.469288e-001, -2.894182e-001, -1.195415e+000, 2.301652e-001, -1.744893e-001, -8.574994e-002, 8.437196e-001},
{-2.859121e+000, -7.013242e+000, 8.891008e+000, -5.941609e+000, 3.543929e+000, 1.487980e+000, 1.932828e+000, -2.019945e+000, -5.441779e-001, 2.451335e+000, -2.063945e+000, 6.101042e-001, -2.672464e-001, -1.093188e+000, 1.372677e+000, -1.241178e+000, 1.498925e-001, 9.444959e-001, 2.072157e+000, 5.634425e-001, -2.394811e-001, -1.480494e+000, -1.521499e+000, 1.234737e-001, 4.848960e-001, 2.693808e-001, -1.301076e+000, 1.292699e-001, 6.555294e-001, 1.152914e+000, -4.537691e-002, -5.872336e-002, -1.359664e+000, 2.525010e-001, 1.016974e+000, -2.401702e+000, -1.727979e-001, 1.474891e+000, -1.284404e+000, 9.412731e-002, 6.957860e-001, 1.036890e+000, 3.158587e-001, 5.066915e-001, -6.140320e-001, -6.506914e-001, -1.120795e+000, -9.588507e-001, 2.568911e-001, 1.599962e+000, -5.191343e-001, -1.576057e-001, -6.986433e-001, 1.230286e+000, 5.906968e-001, 1.017739e+000, -1.912650e+000, -7.261420e-001, 2.888374e-002, 4.085649e-001, 8.253128e-005, 1.936673e-001, -8.101799e-001, 6.566333e-001, -1.457767e+000, 3.517666e-001, -1.062827e+000, -1.380268e-001, -1.004133e-001, -6.900934e-001, 1.899362e+000, -9.640382e+000, -1.513165e+001, -2.259429e-001, 2.441913e+000, 2.836235e+000, -1.386199e+000, 2.921832e+000, -3.293868e+000, -3.569240e+000, -2.571832e-001, 3.955848e-002, 7.922987e-002, -1.524561e+000, 5.464577e-001, -7.081200e-001, -5.158204e-001, 1.807558e-001, 6.306588e-001, -9.583378e-002, -5.648287e-001, -4.298994e-001, 1.012587e-001, -3.129352e-001, -2.878769e-001, 2.390075e-001, 4.855179e-001, 4.369437e-001, 7.644796e-001, -9.893135e-002, 7.005468e-001, -1.562773e-001, 1.651326e+000, 5.462075e-001, 1.559589e+000, 5.219606e-001, -1.338881e+000, -1.040769e+000, 2.579082e-001, -1.734659e-001, 2.188694e-001, -1.849994e+000, -4.899392e-001, 1.757994e+000, 6.269676e-001, 6.782895e-001, -1.014919e+000, 1.595982e+000, 2.744950e-001, 1.024254e+000, 2.236686e-001, -1.440821e+000, -3.844194e-001, 1.472160e-001, 5.507631e-001, 4.329062e-001, 3.839547e-001, 3.076073e-001, 6.998326e-001, -2.804583e-001, 1.134693e-001, 1.244824e-001, 3.416486e-001, 1.137277e-001, 2.773525e-001, 7.014281e-001, -7.470421e-001, 3.072726e-001, -1.139427e-001, 9.478104e-001, -5.851383e-001, -1.214452e+000, 2.103152e-001, -5.651325e-001, 4.997388e-001, 6.531406e-001, -1.824772e-001, 1.272725e-001, -4.768397e-001, 2.632609e-001},
{-2.598145e+000, 1.198065e+000, -1.073476e+001, -1.736452e+001, 2.488942e+000, -1.052361e+000, 2.509461e+000, 1.089232e+000, 2.495524e-001, 1.746334e+000, 3.593837e+000, 4.403389e+000, 3.048700e+000, 1.275394e-002, -1.400077e+000, -5.483412e-001, 2.822920e+000, -1.083672e-001, -3.040358e+000, -5.192405e-001, 1.328314e+000, -8.256517e-001, 3.943494e+000, 3.188164e+000, -5.382792e-001, -1.835214e+000, -1.324358e+000, 2.358365e+000, 2.745907e+000, -2.564880e+000, 1.590658e+000, 1.881542e+000, -2.351434e+000, -1.443736e+000, 6.118201e-001, 1.201344e+000, -9.625639e-001, -3.665486e-001, -4.592841e-001, -1.701405e+000, -1.349815e-001, -2.485956e+000, 1.194861e+000, 7.741278e-001, 7.792208e-001, 2.437220e-001, 4.083091e-001, 5.527154e-001, -1.122271e+000, -2.678461e+000, -7.309303e-001, 3.456420e-001, -5.638264e-001, -2.683147e+000, -7.785020e-001, -3.742586e-002, 8.912076e-001, -7.241886e-001, 9.307598e-001, -1.912492e+000, 3.380649e-001, 9.054850e-001, 7.043612e-001, 1.373916e-001, -5.215411e-001, -2.608533e-001, -6.610490e-001, 1.013527e+000, -1.822673e+000, 5.001095e-001, 3.380200e+000, 1.633554e+000, 5.201811e+000, -1.812993e+001, 6.339841e+000, 2.802207e+000, -1.119511e+000, 3.526357e+000, 3.054211e+000, -1.203969e+000, -1.384285e+000, 2.820909e+000, -9.255714e-001, 3.172807e+000, -1.417055e+000, -1.889309e+000, 2.984734e+000, 1.346253e+000, 1.773379e+000, 2.860703e+000, -1.690918e+000, 6.355740e-001, 9.112301e-001, -4.248188e-001, 1.040266e+000, -8.958015e-002, -2.205510e+000, -1.066723e+000, 1.942656e+000, 3.617387e-001, 1.181852e-001, -8.847086e-001, -1.448598e+000, 4.157118e-001, 2.468464e+000, -8.926617e-001, 6.092536e-001, 1.666616e-001, -1.523553e+000, -2.714464e+000, -7.156998e-001, -1.906966e-001, 3.558672e+000, 4.509748e-001, 1.235512e+000, -1.129126e+000, -2.001586e+000, 1.584247e-002, 1.382384e+000, 5.824123e-001, 7.383072e-001, -3.060860e-001, 6.002246e-001, -9.232427e-001, -6.010101e-002, 7.740661e-001, -1.281953e+000, 6.983360e-001, 1.422004e+000, 3.598427e-001, 7.341979e-001, 2.706324e+000, 3.561714e-001, 1.479403e+000, 2.372031e+000, -3.059499e-001, 1.596876e+000, 2.119501e-001, -7.693616e-001, 9.321112e-002, -4.042280e-001, -1.174311e+000, 1.640871e+000, 5.332203e-002, 6.126788e-001, -2.040919e-001, -9.622611e-001, -3.469948e-001, -7.936244e-001, -6.943775e-001},
{-2.019324e+000, 4.569940e+000, -3.500389e+000, 2.607747e+000, 8.121347e+000, 1.540499e+001, 7.126925e+000, -2.788802e+000, 6.401579e-001, -2.515513e+000, -9.423731e-001, -1.862748e+000, -9.912770e-002, -5.258004e-001, -1.934561e+000, 1.357192e+000, -5.269775e-001, 1.189243e+000, 4.840232e-001, -1.275281e+000, 1.356736e+000, -2.435019e+000, -7.926086e-001, 1.994280e+000, 1.350083e+000, -3.658376e+000, -4.105206e+000, -8.392536e-001, 1.039629e+000, -4.739840e-002, 1.106877e+000, -1.822590e+000, -9.455781e-001, 2.593800e-001, -3.133571e+000, -1.140705e+000, -4.297978e-001, -6.864961e-


© ISO/IEC 2004 — All rights reserved

Copyright International Organization for Standardization
Provided by IHS under license with ISO
No reproduction or networking permitted without license from IHS
Not for Resale

001, -1.301822e+000, 1.582534e+000, -4.333297e-001, 6.102938e-001, -4.685593e-001, 1.637787e+000, 5.166251e-001, -1.883887e+000, 3.039472e-001, -2.573424e+000, 1.090205e+000, -4.209875e-001, -1.442781e+000, 4.615978e-001, 9.267832e-001, 3.412171e-001, -4.576857e-001, -6.488202e-001, 1.794580e-001, -5.898709e-001, -2.843203e-001, -1.484347e+000, -1.455286e+000, -1.010217e+000, -6.312967e-001, -1.024043e+000, -5.272203e-001, 2.744201e-001, 1.202363e+000, -7.694398e-001, -3.183561e-001, 2.074171e-001, 2.132660e+000, -2.146729e+000, 8.876135e-002, 7.153718e+000, 2.200135e+001, 4.310443e-001, 6.830010e+000, 1.840527e+000, -2.895481e-001, -1.806025e+000, 2.301410e+000, -7.453464e-001, -2.553748e-001, 8.541096e-001, 1.801256e-001, 8.943751e-001, 3.131446e+000, -1.038728e+000, -1.002411e+000, -2.484737e-001, -4.585761e-001, 1.042504e+000, -4.879012e-001, -9.041619e-001, 3.771543e-001, -5.722219e-001, 3.682782e-002, 1.892189e+000, -2.686965e+000, 1.610435e+000, 2.915119e+000, 1.880061e-001, -3.487806e+000, 1.058277e-001, -1.221782e+000, 2.118094e+000, -6.124234e-001, 2.002780e-001, -3.821022e-001, -6.952254e-001, 9.891149e-001, 4.567234e-001, -6.953526e-001, -1.331672e+000, -1.078912e+000, 2.094062e+000, 2.250518e+000, 3.371051e-001, 9.279586e-001, -1.954377e+000, 1.161169e+000, -4.667793e-001, -5.771623e-001, 9.544781e-001, -6.880074e-001, 8.737937e-001, 8.705919e-001, -3.470313e-001, -7.752728e-001, -8.634550e-002, -8.058320e-002, 5.311446e-001, 2.078655e+000, -8.407246e-001, -1.733315e-001, -8.200974e-001, -9.278874e-001, 4.389647e-001, 3.294735e-001, 3.130932e-001, 1.140501e+000, -6.533482e-001, -9.971586e-001, 8.639281e-001, -1.830485e+000, -1.829471e+000, 6.271882e-001, 1.109828e+000, 3.720046e-001, 1.991184e-001},

{4.691577e+000, 3.113767e+000, 7.841895e+000, -7.302752e+000, -1.551562e+001, 1.720978e+001, 3.969078e+000, 3.123533e+000, 1.015788e+000, -3.160759e+000, -2.902670e+000, -1.568548e+000, -1.323405e+000, -7.344394e-001, 2.289676e+000, -8.109421e-001, 4.094131e+000, 3.330838e-001, -6.230577e-001, -2.268017e+000, -3.368893e-001, 1.216226e+000, 2.250967e+000, 1.198025e-001, 2.599821e+000, -2.815742e+000, -2.265706e+000, 2.313963e-001, -2.166846e-001, -1.687524e+000, 1.901521e+000, -2.139500e+000, -2.673808e+000, 5.916235e-002, -3.518007e-001, -1.750176e+000, 2.046464e+000, 1.258975e+000, -1.508168e+000, -6.401173e-001, 2.543141e+000, 8.139215e-001, 1.629582e+000, -1.732068e+000, 1.469402e+000, 9.234845e-001, 1.542357e+000, -1.547187e+000, -8.152877e-001, 4.380571e-001, -1.074882e+000, 2.215678e+000, 2.198282e-001, 2.115786e+000, -2.136826e-001, 1.331123e+000, 3.097875e-001, 2.949454e-001, 1.925527e+000, 2.747358e+000, -7.780362e-001, 1.437626e-001, -4.167712e-001, -2.005645e-001, -1.600511e+000, -1.819564e+000, 1.277902e+000, 1.687636e+000, -1.315015e-001, 2.821081e+000, -4.426706e+000, -1.928572e-001, 1.749447e+000, -1.074183e+000, 1.786815e+000, -2.270846e+001, -1.590777e+000, 3.562050e+000, 2.138781e+000, -6.495270e+000, 8.619335e-001, 8.839392e-001, -2.856010e+000, 5.852580e+000, -3.188607e+000, 1.409855e+000, -8.472002e-001, 1.453998e+000, 1.298204e+000, -4.540223e-002, -3.693768e+000, 5.864822e-001, 6.952687e-001, -1.335160e+000, -1.749203e+000, 5.607389e-001, -3.841203e+000, -3.043973e+000, 7.030678e-001, 1.186701e-001, 1.279745e+000, -1.564831e+000, 4.038804e-001, 1.170532e-001, 4.307308e-001, 2.548623e+000, -5.034502e-001, -1.183655e+000, -1.355647e+000, 3.058935e-001, -1.682891e+000, -2.903487e+000, -1.148771e+000, -1.055720e+000, 2.260862e+000, -5.393413e-001, -1.019067e-001, -6.115036e-001, -1.801756e+000, 1.141360e+000, -7.486045e-001, -9.646046e-001, -1.852594e+000, -4.061779e-001, 9.940200e-001, -1.361929e+000, -1.536609e+000, -6.501033e-002, -3.967134e-001, 1.689565e-001, -2.300023e+000, -1.431604e+000, -1.984406e+000, 5.682165e-001, 2.396061e+000, -1.088694e-001, 8.622534e-001, 9.474857e-001, -7.973439e-001, 2.118483e-001, 2.026905e-001, -6.738109e-001, 2.167712e+000, 9.252511e-001, 8.693105e-001, -1.600547e+000, 4.218344e-001, 2.507504e-001, -5.801357e-001, -1.681468e+000},

{7.461768e+000, 3.836704e+000, -5.598874e+000, -3.921410e+000, -8.273631e+000, 6.313569e+000, -6.982889e+000, -1.862218e+001, 6.655532e+000, 4.449768e+000, 7.221698e-001, 2.800984e+000, 1.476207e+000, -3.056275e+000, 2.446909e+000, -2.783473e+000, 2.239251e+000, -1.196629e+000, 4.142318e+000, 2.338177e+000, -1.073180e+000, -2.945114e+000, -1.659610e+000, -1.965927e+000, -2.383077e+000, 7.267800e-002, 1.604935e+000, -2.978637e+000, -1.699458e+000, -2.384305e+000, -8.829868e-001, 2.406599e-001, 1.336587e+000, 2.877095e+000, 2.242914e+000, 9.517337e-001, 1.809143e-001, -7.637705e-001, 1.842337e-001, 5.652664e-001, -2.433558e+000, 3.727768e-001, 6.288827e-002, 3.505742e-001, 1.953557e+000, 1.143421e+000, 1.009838e+000, 6.168099e-001, 1.878820e+000, -1.117854e-001, 4.757999e-001, -7.552664e-001, -6.980303e-001, 1.519308e+000, -5.630062e-001, 1.656199e+000, -5.626263e-001, -7.654736e-001, -4.417940e-001, 1.643370e+000, -1.390439e+000, -9.886632e-001, 8.240075e-001, 2.551248e-001, -4.952054e-001, -8.558612e-001, -4.732619e-001, -2.445514e-001, 2.060538e+000, -8.154151e-001, -8.977302e+000, -2.966591e+000, -5.418268e+000, 7.658364e+000, -1.063479e+001, 1.155377e+001, 1.803931e+001, 1.191470e+001, -2.630926e+000, -2.732114e+000, -5.368000e+000, -1.501395e+000, -3.384955e+000, -2.889373e+000, -2.086749e+000, 3.327879e+000, -4.332526e-001, 2.806574e+000, -1.426109e+000, -1.821444e+000, 1.682674e+000, 3.153868e+000, 3.226248e+000, 1.014296e+000, 1.004038e+000, -2.173567e+000, 1.753417e+000, 3.298713e+000,

© ISO/IEC 2004 — All rights reserved


Copyright International Organization for Standardization
Provided by IHS under license with ISO
No reproduction or networking permitted without license from IHS
Not for Resale

8.030393e-001, 1.083638e+000, -1.541082e+000, -1.134228e+000, 1.033939e+000, 5.106645e-001, -1.711470e+000, 1.015210e+000, -5.930910e-001, -8.476155e-001, -4.179887e-001, -3.465172e-001, -1.387723e+000, -1.495194e+000, -1.278713e+000, 1.551651e-001, 6.297620e-001, -3.011008e+000, -8.658990e-002, -7.654017e-001, -1.378141e+000, -5.835046e-002, 1.221250e+000, 9.435412e-001, -1.257994e+000, 1.728921e-001, 5.968084e-001, 4.296376e-001, -6.428015e-001, 4.425704e-001, -2.538223e-001, -7.577252e-001, 4.521943e-001, -5.680044e-001, -2.038360e+000, 3.932197e-001, -2.219566e+000, -6.682918e-001, 7.518005e-001, 5.653687e-001, 9.068884e-002, -1.085448e+000, -5.200967e-001, 1.158183e+000, -4.558601e-001, 1.239365e-002, -1.480325e-001, -8.412493e-002, 2.345845e-001, 1.118890e+000, -1.040314e+000, 2.888288e-001},
{1.376421e+000, -4.515471e+000, 8.388419e-001, -4.734142e+000, 6.167129e+000, 5.770934e+000, -1.754069e+001, 7.877228e+000, 8.303738e-001, -1.060067e+001, 4.635770e+000, -4.763810e+000, -4.645731e+000, -2.832125e+000, 4.883050e-002, -3.579779e+000, -1.328519e-001, -3.857070e+000, -9.555721e-001, 2.018289e+000, -2.388049e+000, -1.799021e+000, -5.966771e-001, -2.079864e-001, -1.475131e+000, 1.885751e+000, 2.704785e+000, -4.370240e-002, -7.125777e-001, 6.287631e-001, 2.957675e-001, -2.225663e+000, 8.109971e-001, -6.906904e-001, 9.070929e-001, 7.963440e-001, -4.093383e-001, 2.569050e+000, 1.672529e+000, -2.038197e+000, -5.523421e-001, -1.138672e+000, 2.442003e+000, 2.128590e-001, 1.864925e+000, -1.255140e+000, -1.031222e+000, 1.777790e-002, 1.327620e+000, -4.950661e-001, 1.885089e+000, 2.018477e+000, 3.268887e+000, -1.253685e-001, -6.338757e-001, 1.698263e+000, -9.837700e-001, 1.279673e+000, 8.108606e-002, -2.114263e+000, -1.580252e+000, -1.210159e+000, -1.166892e+000, 9.462153e-001, -8.359229e-001, -8.417579e-001, -6.566377e-002, 2.603497e+000, 4.384137e-002, -2.371930e-001, -2.994873e+000, 3.769765e+000, -3.159794e+000, -3.541484e-001, 8.604962e-002, -7.333613e+000, 2.160992e+001, -2.180625e+001, 7.656347e+000, 7.125205e+000, 4.866854e-001, -3.910667e+000, -1.555345e+000, -7.181871e-001, 2.591595e+000, -9.095887e-001, -3.296958e+000, -3.892980e+000, -7.565777e-001, -8.138885e-002, -3.838070e+000, -1.891488e+000, 1.482237e-001, 2.091073e+000, 1.583767e+000, 1.782361e+000, -1.107063e+000, 7.627725e-001, 1.052287e+000, -5.177814e-001, 1.000254e+000, 1.071534e+000, 9.049478e-001, -8.178426e-001, -1.275503e-001, 8.255151e-002, 2.040418e+000, 2.007666e+000, 8.390237e-001, -3.823141e-001, -6.977445e-001, 2.224153e+000, -6.499640e-001, -1.125937e+000, -2.722362e-001, -8.398032e-003, 1.524735e+000, 1.245887e-001, 1.085512e+000, 8.637476e-001, -1.446353e+000, -1.443655e+000, -3.652849e-001, -1.352385e+000, -2.563980e+000, 9.194637e-001, -2.759942e+000, 5.656171e-001, -1.213079e+000, -3.662667e-001, 5.272136e-001, 6.240175e-001, -1.544740e+000, -4.562742e-001, -1.976625e-001, 9.329327e-001, 2.197940e+000, -2.889003e-001, -1.143272e+000, 1.936997e-001, 5.284146e-001, -1.507747e+000, 1.534751e-001, 1.432564e+000, 1.443202e+000, -1.218982e+000, 1.163269e+000, -8.278417e-001, 6.295130e-001, -1.084398e+000},
{-2.083991e+000, 6.567984e+000, 3.757856e+000, -4.451178e+000, 1.942030e-001, -2.159268e+001, 1.571921e+001, -9.307484e+000, 8.803828e+000, -1.302611e+001, 2.478887e+000, -1.281042e+001, -9.060386e+000, -7.175434e+000, -2.218075e+000, -2.111423e+000, -2.881584e-003, -3.742090e+000, -4.213308e+000, -1.569787e-001, -1.563845e+000, -5.362224e-001, -2.601078e+000, 1.586584e+000, -1.296535e+000, -6.779720e-001, 1.486680e+000, -2.469120e-001, 6.380146e-001, 2.939262e-001, -1.642041e+000, -1.389690e+000, -3.305481e-001, 1.286986e+000, -4.196460e-001, -9.079512e-001, -1.036996e+000, -3.879463e-001, 1.797117e+000, 1.165802e+000, 2.844717e+000, -7.607748e-002, 4.583844e-001, -2.427823e+000, -7.186036e-001, -1.851518e+000, 3.256928e+000, 2.712945e-002, -1.309537e+000, -1.608938e+000, 1.291394e+000, -1.953878e-001, 6.848812e-001, 1.263378e+000, -3.840474e-001, 4.803185e-001, 6.311024e-001, 7.942744e-001, 1.896113e-001, 3.252866e-001, -6.452168e-001, -1.988065e+000, 2.849681e+000, -4.499111e-001, -1.475975e+000, 1.424337e+000, -1.127978e+000, 1.293813e+000, 6.682664e-001, -8.197891e-001, 1.285868e+000, -7.246261e+000, 2.733963e+000, 1.450202e+000, 2.953779e+000, -1.373539e+001, 8.965319e+000, 1.461438e+001, 1.145293e+001, 1.127887e+001, 5.453825e+000, -1.236132e+001, 7.209619e+000, -4.401696e+000, -7.902841e-001, -2.426157e+000, -4.436515e+000, -2.766773e+000, 4.763863e-001, 3.332971e+000, 2.327126e+000, 4.350005e+000, -6.269246e-001, -1.702096e+000, -8.503062e-003, -1.604520e+000, -2.157460e+000, -1.092919e+000, 1.692351e+000, 8.095285e-001, -1.034980e+000, 2.865340e+000, 3.049645e+000, 2.217442e+000, 1.011236e+000, 5.412799e-003, -3.079287e-001, -1.536128e+000, 8.268375e-001, -2.296856e-001, -3.147859e+000, -9.469943e-001, 2.318363e+000, 1.948855e+000, -2.164351e+000, 5.887597e-001, -2.685541e+000, 2.504303e+000, -1.211784e+000, -1.118208e+000, -1.173864e+000, 9.701641e-001, 8.082368e-001, -6.349837e-001, 9.259700e-001, 1.573960e+000, 1.660693e+000, 5.702780e-001, 1.093798e+000, 2.971619e-001, 1.818094e+000, -8.990374e-001, -3.237870e-001, -3.401397e-001, 8.604544e-001, 2.060658e+000, 1.312241e-001, -5.958437e-001, -1.676488e+000, -1.314503e+000, -1.853048e-001, -2.889384e+000, 3.373448e-001, -1.213905e+000, 6.599404e-001, 2.567824e+000, -6.161469e-001, 1.557874e+000, 4.248215e-001, -1.387790e+000},


© ISO/IEC 2004 — All rights reserved

Copyright International Organization for Standardization
Provided by IHS under license with ISO
No reproduction or networking permitted without license from IHS
Not for Resale

{-1.442218e+000, 7.327513e-001, 1.936732e+000, 3.940830e+000, -6.243256e+000, -3.643082e-001, -2.461008e+000, 6.368907e+000, 1.440722e+001, -2.018588e+001, -4.428071e+000, 7.957848e+000, -1.603067e+000, 5.868261e-001, 7.159385e+000, 1.149766e+001, 3.361584e+000, 1.325990e+000, 1.274460e-001, -1.566833e+000, 3.060220e+000, -1.002037e+000, 3.993796e+000, -7.643596e-001, -2.412814e+000, -5.184827e+000, -3.370577e+000, 8.441260e-002, -7.978677e-001, -1.982786e+000, -3.787229e+000, -2.892652e+000, 3.441736e-001, 7.234980e-001, -1.991028e-001, 7.412915e-001, 1.119044e+000, 1.778123e+000, -1.494246e+000, -2.076692e+000, -1.624042e-001, 1.168532e-001, -9.049142e-001, 1.770080e+000, 2.056518e-001, -3.405776e+000, 2.138975e+000, -2.144333e+000, 1.245518e+000, 1.159438e+000, -2.253690e+000, -4.065278e-001, 1.101505e+000, 9.853904e-001, -7.496609e-001, -1.590263e+000, 9.948892e-002, -4.994969e-001, 1.532380e+000, -1.048383e+000, -4.699772e-001, 9.663490e-001, -1.627524e+000, -1.293617e+000, -1.565746e-002, -5.451865e-001, 1.133962e+000, -8.055407e-001, -1.852941e-001, -2.345346e-001, 2.492156e+000, 2.983700e+000, -3.106010e+000, -3.542253e+000, -1.552656e-001, 1.402018e+001, 3.638441e+000, 1.929282e+000, 2.296151e+001, -9.341363e+000, 3.031446e+001, 1.630696e+001, -3.659452e+000, 5.175184e+000, 2.724826e+000, 2.963159e-001, -4.718197e-002, 3.811856e+000, 2.813864e+000, 1.946294e+000, -5.603007e+000, 1.278836e+000, 2.471439e+000, -1.984304e+000, 1.092581e+000, 2.161448e-002, -1.061054e+000, 6.840483e-001, -1.434456e+000, -4.730548e+000, 7.962561e-001, -2.033854e+000, 3.362353e-003, -2.303038e+000, -1.219648e-001, 1.967606e+000, 2.143978e+000, -5.069197e-001, 1.468845e+000, 5.863112e-001, 1.562395e-001, 1.060353e+000, 2.204293e-001, -3.019709e+000, -1.576909e+000, 1.175441e+000, 1.598337e+000, 1.389336e-002, 1.419202e+000, 1.679695e+000, 1.286317e-001, -1.357813e+000, -1.953571e+000, -2.141468e-001, -4.463171e-001, 1.718863e-001, -2.277395e+000, -5.031270e-001, -7.044003e-001, -2.759106e-001, -2.279526e+000, 7.904699e-001, 1.089607e+000, -1.379615e-001, 2.556290e+000, 6.918809e-002, 1.288017e+000, 1.738934e+000, -2.046516e+000, 2.110069e+000, -3.865492e-001, -1.853781e+000, -7.176793e-001, -1.097719e+000, 1.206296e+000, -9.101130e-001, 1.429114e+000, 5.246569e-001, -1.080730e+000, -3.588352e-001},

{3.239585e+000, -1.279014e+000, -1.223129e+000, 4.468562e+000, 2.417245e+000, 1.618731e+000, -7.551643e+000, -2.589650e+001, -2.351628e+001, -1.047793e+001, -5.135495e+000, -8.690857e+000, -6.934669e+000, 1.108505e+001, 2.636256e+000, 5.404953e+000, 4.331522e+000, 2.232251e+000, -6.164146e-001, -8.067808e-001, 2.302481e+000, 1.754389e+000, -1.223543e+000, -3.618426e+000, -2.611023e-001, -3.098320e+000, -3.378383e+000, 4.473190e+000, 1.397819e+000, 1.394016e-001, 2.139765e+000, 5.629261e+000, -1.794483e+000, -8.877853e-001, 1.445729e+000, 1.226064e+000, 3.026257e+000, 2.600211e+000, 1.926952e+000, -1.904501e+000, 2.872844e+000, 2.019398e+000, 3.821455e-001, -1.570931e+000, 2.073391e-001, -1.713366e+000, 1.511451e+000, -2.139552e+000, -3.215379e-001, -9.283246e-001, -1.522036e+000, 7.173193e-001, -1.430548e+000, 9.376884e-001, 9.458950e-001, 2.752865e-001, 5.782912e-001, 1.031763e+000, -1.005744e+000, -2.331506e-001, -1.936373e+000, -1.507836e+000, -1.783836e+000, -2.408022e+000, 1.007785e+000, -8.467806e-001, 9.525073e-002, 2.259524e+000, -7.260963e-001, 1.571022e+000, -4.875134e+000, 1.707909e+000, -1.474100e+000, -6.656125e+000, 3.132570e+000, -2.812816e+000, -1.103746e+000, -2.792832e+000, -6.824221e+000, 4.101984e+000, 1.111142e+001, 3.559679e+000, 1.638685e+001, 2.064193e+001, -6.841971e+000, -3.415204e+000, -4.942332e+000, 1.693285e-001, 3.777737e-001, -1.919554e+000, -8.565930e+000, -2.813724e+000, -2.615389e+000, 7.896538e-001, 3.178659e+000, 8.083548e-001, -4.861247e+000, 2.757186e+000, 4.740213e-001, -1.635773e+000, -1.077283e-001, -8.218758e-001, 1.569321e+000, -1.546522e+000, -1.918248e+000, -2.302894e+000, 3.614573e-001, 4.153535e+000, 2.078110e+000, -2.397681e+000, -3.004078e+000, 2.945988e-001, -9.529616e-001, -2.940014e+000, 2.691084e+000, -3.376358e+000, 2.662323e+000, 1.398041e+000, -5.304413e-001, 5.892364e-001, -1.450216e+000, 4.216004e-001, 1.057759e+000, 1.907382e+000, -2.546998e+000, 1.281511e+000, -1.060537e+000, 4.684854e-001, -2.148581e+000, -1.608326e+000, -1.758138e+000, -9.709788e-001, -1.981597e+000, 6.364124e-001, 8.924115e-001, -8.230195e-001, 1.383188e+000, -1.655759e-001, -2.869696e+000, -1.988253e+000, 1.244642e+000, -1.916620e+000, 2.752195e+000, 3.258537e-001, 7.439268e-001, -1.753689e+000, 1.148462e+000, -8.375908e-001, 1.283350e-001, -1.170951e+000},

{-1.012994e+000, 6.303870e+000, -5.389672e+000, 2.895893e-001, -2.182576e+000, -5.015085e+000, 1.421057e+001, 5.916854e+000, -1.250437e+001, -9.513087e+000, 6.061202e+000, 2.064336e+001, -4.404369e+000, 1.589568e-001, -1.770543e+000, 1.003829e+000, -2.681810e+000, 1.759629e+000, 3.898335e+000, 3.822201e+000, -7.898281e-001, 3.360782e-001, -7.306052e-001, 1.344573e+000, -3.636982e-001, 2.264585e-001, 5.427068e-001, 1.916884e+000, -1.504693e+000, -6.230179e-001, 1.762897e+000, -2.323699e+000, -2.227030e+000, 2.157218e+000, -1.326352e+000, -2.821575e-001, -1.060329e-002, 1.667207e+000, 6.566016e-002, 1.415755e+000, 1.096378e+000, -6.437445e-001, -3.158388e-001, 5.852897e-001, -6.166718e-001, -1.726752e+000, -3.429834e+000, 3.219521e+000, -1.648782e+000, 7.569648e-001, -9.997247e-001, -5.469111e-001, 2.547638e+000, -2.302760e+000, 7.761243e-001, 2.475870e+000, 2.545448e+000, 1.956957e+000, -1.334934e+000, -2.404951e+000, -9.981051e-001,

© ISO/IEC 2004 — All rights reserved


Copyright International Organization for Standardization
Provided by IHS under license with ISO
No reproduction or networking permitted without license from IHS
Not for Resale

2.247960e+000, 1.907418e+000, 8.319485e-001, -2.409925e+000, 1.169066e+000, 1.612638e+000, -1.251068e+000, 8.776277e-002, -1.020629e+000, 1.572836e+000, -4.944783e+000, -4.327543e+000, 2.299661e+000, -7.742252e+000, -2.577365e+000, 9.017502e+000, -9.450984e+000, -2.139324e+001, -1.441641e+001, 1.803478e+001, -1.817646e+001, -3.944782e+000, 2.068634e+000, 2.872997e+000, 7.480598e+000, 3.193660e-001, 1.989531e+000, -6.055445e+000, 5.502517e+000, 2.935026e+000, 1.971289e+000, 2.079257e-001, -7.276956e-002, 7.062473e-001, 9.097921e-001, -1.214083e-001, -1.638501e+000, -4.634656e-001, 1.890408e+000, -1.255445e+000, 2.308863e+000, 1.265309e+000, -1.606360e+000, -5.944725e-001, -3.391772e+000, -8.115237e-002, 2.235141e+000, -5.124077e+000, 8.657767e-001, -2.580809e-001, -9.432854e-001, 1.614440e-001, -4.140060e-001, -1.146475e+000, -7.547310e-001, -1.586895e+000, -1.875270e+000, 8.511661e-001, -1.626767e+000, -1.086429e+000, -2.533586e+000, 7.952995e-001, 9.438864e-001, -9.432366e-001, 6.047805e-002, 1.371592e+000, -7.651992e-001, 1.462136e+000, 2.075897e+000, -8.147799e-001, 1.286464e+000, 2.820632e+000, 2.096325e-001, 3.537399e-001, -8.665011e-002, -6.241402e-001, 1.124600e+000, 3.048863e+000, -2.545773e+000, 3.343840e-001, -2.264391e+000, 5.501268e-001, -1.119652e+000, -7.897593e-001, 7.581177e-001, -2.988604e-002, 7.039151e-001, 1.135656e+000, -2.222428e+000},
{-3.106792e+000, -1.380011e+000, 3.136099e+000, -1.808956e+000, -4.738063e+000, -4.975062e+000, 2.391083e+000, -6.037191e+000, -1.289952e+001, 1.270678e+001, -1.044186e+001, 1.672715e+001, -1.273308e+001, -9.970027e+000, 2.533179e+000, -2.164145e-001, 8.860652e+000, -6.468121e-001, -3.505532e-001, 1.149791e+000, -5.363464e+000, 2.096057e+000, 2.274322e+000, 3.899057e+000, -5.926390e+000, -4.272906e+000, 6.434898e+000, 3.782196e+000, -5.048036e+000, -5.382852e+000, -2.535573e+000, -2.462249e+000, 2.362790e+000, -6.282349e-001, 1.267595e+000, 3.864455e+000, 1.610803e-001, -3.686368e+000, 2.531830e+000, -3.880258e-001, -9.631447e-001, 1.800398e+000, 3.815204e+000, -1.020473e+000, 2.165187e+000, -2.385952e+000, 3.376243e-001, 4.083237e+000, 1.358330e+000, -1.737510e+000, 1.711982e+000, -5.676136e-001, -2.566330e-001, -1.222472e+000, 2.656889e-002, 1.226030e-001, -1.812917e-001, 1.772692e+000, 1.977859e+000, -4.446184e+000, 7.764096e-001, 7.096869e-001, -9.255840e-001, 4.585046e-001, -2.888034e+000, 2.667198e+000, 2.075415e+000, -4.840956e-001, -1.967307e+000, -1.816721e+000, 4.309195e+000, -8.292621e-001, 4.150774e+000, 2.803702e+000, 6.224755e+000, 1.931423e+000, 1.823225e+000, -4.206885e+000, 3.046922e+001, -6.249059e+000, -1.650990e+001, -1.712928e+001, -5.206895e+000, 1.712989e+001, 4.237784e+000, 3.418891e+000, -1.536034e+000, 7.641979e+000, -1.059900e+001, 8.826405e+000, 9.976387e-001, 8.040015e+000, 4.818435e+000, 2.505931e+000, -5.391035e+000, -2.770010e-001, -5.597825e+000, -1.261163e+000, 1.832375e+000, -7.025967e-001, -2.081117e+000, 9.503112e-001, 1.697665e+000, -4.823382e+000, 4.560662e-001, -1.338036e+000, -1.822638e+000, 1.048752e+000, -3.671989e+000, 2.267033e+000, 1.269556e+000, 1.499846e+000, 5.995870e-001, 1.107786e+000, -1.822085e+000, -1.893336e+000, -2.160326e+000, 4.641159e-002, -1.786048e-001, 4.560481e-001, 6.011549e-002, 2.863880e+000, 2.573440e+000, -1.081662e+000, 5.452249e-001, -2.168303e+000, -1.228823e+000, -1.390838e+000, 6.174761e-001, 1.229618e+000, -5.538970e-001, 1.362534e+000, -6.097329e-001, 8.303302e-001, -1.126661e+000, 6.858198e-001, 2.490738e-001, -1.228455e-001, 1.497590e+000, -1.720804e+000, -1.059204e+000, 1.874958e+000, 4.291384e-001, -1.335948e+000, -5.332490e-001, 1.563531e+000, 2.521394e-001, -1.005089e-001, -1.143305e+000, 1.643096e+000},
{5.494393e+000, -1.138808e+001, 8.807974e-001, -1.182641e+000, 1.452246e+001, 6.074752e+000, 7.451214e-001, -1.724465e+000, -1.227311e+001, -1.281811e+001, 6.283621e+000, 6.773877e-001, 1.832716e+001, -4.116827e+000, 8.640253e+000, -6.383989e+000, 9.945798e-001, 4.966148e-001, -3.632825e+000, -4.542174e+000, 4.282894e+000, -3.472390e-001, 6.494230e+000, 8.750945e-001, -3.513489e+000, 1.489504e-001, -9.984078e-001, 1.634289e-001, -3.913531e+000, -6.686109e-001, 6.801126e-002, -7.214869e+000, -3.085833e-001, 1.833470e+000, -2.464124e+000, -3.563120e+000, 3.751818e-001, -2.538409e-001, -1.475002e+000, -1.268162e+000, 5.393977e-001, 9.694753e-001, 1.210843e+000, 1.781257e+000, 1.228667e+000, -3.503841e+000, -8.488873e-001, -2.537778e+000, -4.507302e-001, 3.588626e+000, 5.939536e-001, 2.344427e+000, -2.914344e+000, 6.690668e-001, 1.252475e-001, -3.113582e-002, -9.942234e-002, 2.060924e-001, -7.078860e-001, 3.054477e+000, -2.452046e+000, -1.240553e+000, 1.854868e+000, -1.226366e+000, 3.420510e+000, -1.531223e+000, 4.369537e+000, -4.278594e+000, -1.047900e+000, 9.155360e-001, -6.044119e+000, 1.151663e+001, 3.803986e+000, -1.610219e+000, -5.259884e+000, -6.895382e-001, -1.632048e+000, 1.724791e+001, 1.619380e+001, -6.207309e+000, 4.961044e+000, -1.563650e+001, -2.253532e+000, -3.511096e+000, -1.129497e+001, 2.143538e+001, 6.325619e+000, -1.043721e+001, 1.655876e+001, -8.373221e+000, -4.048132e+000, -7.462707e+000, 5.843069e+000, -1.397755e-001, -8.775674e-001, 3.597433e+000, 1.063833e+000, 3.058945e-001, -5.286671e+000, 1.786724e+000, 3.803293e+000, -3.119015e+000, 4.556667e-001, 5.431721e+000, -1.074279e+000, -2.617024e+000, 3.189768e+000, 2.081527e+000, 1.289906e+000, -4.844382e-002, 2.264942e+000, -2.033037e+000, 1.530010e+000, -2.099266e+000, -1.544801e-001, 2.918814e-001, 2.999718e-001, 7.467720e-001, -2.432622e+000, -3.576686e-001, -6.767807e-002, -1.645672e+000, -6.068583e-001, -


© ISO/IEC 2004 — All rights reserved

Copyright International Organization for Standardization
Provided by IHS under license with ISO
No reproduction or networking permitted without license from IHS
Not for Resale

9.745663e-001, -3.062470e+000, -1.477418e-001, -1.597279e+000, -1.113435e-001, 3.224549e+000, -1.088183e+000, -1.645614e+000, -2.126854e+000, 3.462136e+000, -1.270807e+000, 2.203283e+000, 1.347174e-001, -9.774538e-001, -1.131759e+000, -1.991020e+000, 1.581576e+000, -2.703821e-001, -2.693861e-001, 1.304124e+000, 1.358682e+000, 7.908250e-001, -1.726663e+000, -3.347204e-001, 8.785165e-001, -2.060467e+000, 9.791361e-001},
{-4.996324e+000, -3.593549e+000, -2.786171e+000, -6.312721e+000, 2.642131e+000, 2.966352e+000, -2.403497e+001, 1.259063e+000, -2.851752e+000, -2.643477e+000, 1.911991e+000, 8.676445e-001, 2.963781e+000, 2.162661e+000, -2.097749e+001, 1.983560e+001, 3.154873e+000, -7.397417e+000, -1.424344e+000, 2.454397e+000, -1.194092e+000, -7.015284e+000, -9.946649e-001, 2.923517e+000, -1.560358e+000, -4.596356e-001, -2.279622e+000, 6.707261e+000, -1.704793e+000, 1.542947e-001, 5.988468e-001, 5.034117e-001, -4.368648e+000, -3.055701e+000, -8.209933e-001, -2.573733e+000, -5.245042e-001, -5.633134e+000, -4.212841e-002, 3.825997e+000, 1.893349e+000, -8.512608e-001, -7.618861e-001, 9.605035e-001, -5.720189e-002, -9.399206e-001, 4.289698e-002, 1.791812e+000, 6.822528e-001, 7.821601e-002, -3.224025e-001, -1.098758e+000, 9.972240e-001, -8.842667e-001, -4.375276e-002, -1.541942e+000, -1.601682e+000, 3.387538e-001, 2.449064e+000, 2.357023e-002, -1.812255e-001, -1.430377e+000, -4.610464e-001, 8.255651e-001, 3.479216e-001, 2.621993e+000, 5.753756e-001, 8.465853e-001, -4.829651e-001, -8.981871e-001, 6.097174e+000, 1.741902e+000, 1.764325e+000, 8.217378e+000, 1.949819e+000, -2.893600e+000, -1.125018e+001, 2.034469e+001, -5.848694e+000, -5.215400e-001, 7.896085e+000, -1.994320e+001, -3.469334e+000, -1.165312e-001, 1.829829e+001, -2.158349e+001, 1.253908e+001, 2.567974e+000, 1.796784e+000, -3.313188e+000, 1.039172e+000, -4.870759e+000, -1.480461e+000, -7.242082e-001, -3.770092e-001, -4.322303e+000, 6.222679e+000, 7.972733e+000, -9.925558e-001, -3.772615e+000, 1.586499e+000, 6.647372e-001, -1.641176e+000, 2.832092e+000, -3.347445e+000, -6.735722e+000, -4.259925e-001, 4.045383e+000, 1.352100e+000, -1.035459e+000, 3.800057e+000, 1.562233e+000, 1.620563e+000, -2.537278e+000, -1.068134e+000, 5.157447e+000, -9.175746e-001, 9.059427e-001, 2.622493e+000, -1.063312e+000, 2.273310e+000, -1.183114e+000, -2.135530e+000, -1.729981e+000, -4.586416e+000, 2.059357e+000, -2.026124e+000, 4.506987e-002, 7.176295e-002, -2.568040e+000, 6.350029e-001, 2.567280e+000, 3.096579e-001, 1.639342e+000, -1.012937e-001, -5.889129e-001, -3.708641e-003, 9.293141e-001, 5.805589e-001, -1.067671e-001, 4.387961e-001, 5.444640e-001, 4.305114e-001, 1.729132e-002, -1.164776e+000, 1.587091e+000, 3.051831e+000, 1.175709e+000, -7.786435e-001, -7.499715e-001},
{2.632468e+000, -6.007292e+000, -5.473101e+000, 3.563085e+000, 5.886815e+000, 4.257896e+000, 5.066101e+000, -1.115147e+001, 5.147861e+000, -1.144086e+001, -4.642042e+000, -5.976184e+000, 1.798969e+000, 5.336178e-001, 2.347537e+000, -1.106706e+001, 8.515720e+000, -1.343458e+001, 1.559064e+001, -3.353940e+000, -1.054192e+001, -2.577695e+000, -5.402847e-001, 5.761420e+000, -7.788036e+000, 5.157057e+000, 5.681860e+000, 5.123953e+000, -3.144056e+000, -5.435686e+000, 1.852044e+000, 5.152406e-001, 2.702923e+000, -5.913265e+000, 2.760145e+000, 5.943018e-001, -2.364116e+000, -3.796925e+000, 5.560249e-001, -2.126729e+000, 2.322579e+000, -2.360397e+000, 4.348970e+000, -1.431716e+000, -8.010872e-001, 2.159269e+000, 3.484576e+000, 2.537132e-001, -2.879075e+000, 2.764179e+000, -2.097127e+000, -1.266850e+000, -2.014184e+000, 1.851534e+000, 1.445274e+000, -8.405341e-001, -1.691825e+000, 3.256335e+000, 5.005941e-001, 1.621789e+000, 7.406184e-001, -2.572861e+000, -1.860097e+000, 7.777651e-001, 2.540421e-001, -6.644852e-001, -9.342904e-001, 8.577504e-001, -1.400420e+000, 1.200847e+000, -3.249108e+000, 6.407120e+000, -1.470299e+000, -6.263229e+000, -1.789873e+000, -5.395594e+000, -7.733698e+000, -1.095403e+001, 6.736634e+000, -3.020077e+001, -3.354260e+000, -5.019595e+000, 1.108915e+001, -1.944937e+001, -9.425199e+000, -2.314322e+001, -6.797899e+000, 4.005586e-001, -4.797674e+000, 4.660233e+000, -5.510735e+000, 4.157074e+000, -3.364715e+000, -1.051963e+001, 4.123228e+000, -4.378493e+000, 5.467482e+000, 5.099396e+000, -5.203589e+000, -2.398326e+000, -5.177755e+000, 2.785645e+000, -3.978690e+000, -4.779473e+000, -2.833696e+000, 5.500656e+000, 1.528541e+000, -3.264460e+000, -2.195323e+000, -3.783083e+000, -5.995654e+000, -5.483991e+000, 1.321116e+000, 2.804726e+000, -1.478943e+000, 4.124238e-001, -1.557952e+000, 2.815854e+000, 2.173979e+000, -2.034392e+000, -4.832246e-001, 3.040582e+000, -1.470530e+000, -4.601128e-002, 1.677491e-001, 1.741818e+000, 1.860387e-001, -8.661131e-001, -4.666417e-001, 3.480772e+000, 6.229886e-001, -5.242087e+000, -1.877392e+000, -1.534572e+000, -1.265035e+000, -1.718243e+000, -1.114876e+000, -7.393412e-001, -1.227913e+000, 1.106331e+000, -7.731534e-001, 2.362291e+000, -1.010749e+000, 1.195687e+000, -2.416501e-001, -1.005299e+000, 7.190672e-001, 2.164073e+000, -1.481645e+000, 6.119179e-001},
{6.100165e+000, 7.764610e+000, -6.623207e+000, -3.827561e+000, 6.098600e+000, 2.831513e+000, 3.516629e+000, 4.922479e+000, -4.403082e+000, -2.281830e-001, -1.292345e+001, -5.495344e+000, 1.139275e+001, -1.109874e+001, -2.507568e+000, -5.138821e+000, 1.560726e+001, -1.611134e+001, -2.345705e+000, 7.895033e+000, -8.061158e+000, 9.383291e+000, -6.869778e+000, 5.144182e+000, -3.693494e+000, -2.232819e+000, -9.329892e-001, 1.712192e+000,

© ISO/IEC 2004 — All rights reserved


Copyright International Organization for Standardization
Provided by IHS under license with ISO
No reproduction or networking permitted without license from IHS
Not for Resale

3.758747e+000, 1.847340e+000, -2.472906e+000, 7.294803e+000, 4.192861e+000, 2.089809e+000, 3.566564e+000, 2.372587e+000, 2.699721e+000, 3.926133e-001, 3.344763e+000, 5.659176e-001, -2.493072e+000, -7.690932e-001, -3.731767e+000, 4.627829e-001, 5.727649e-001, 3.690606e+000, 4.664202e+000, -1.088566e+000, 3.329223e+000, -2.811159e+000, 2.549642e+000, 4.210110e+000, -2.222714e+000, 1.512301e-001, -1.827214e+000, -1.903074e+000, 2.975762e+000, 1.325781e-001, -1.027724e+000, -1.553449e+000, 2.155488e-002, 2.196781e+000, -9.249597e-001, -1.632136e-001, 2.769008e+000, 3.762256e-001, -6.919065e-001, 1.663550e+000, 6.592473e-001, -1.618228e+000, -6.940184e+000, -4.767574e+000, -5.260541e+000, 4.637159e+000, -8.902542e+000, -5.800974e-001, -3.071633e+000, -4.291764e-001, -2.565443e+000, 1.362520e+001, 1.589716e+001, 4.790113e+000, -2.737291e+001, 9.780162e+000, -1.879187e+001, -1.549195e+001, -1.123030e+001, 9.133838e-001, -8.708156e+000, -3.997710e+000, -2.492725e+000, 6.141680e+000, 3.470736e+000, -3.714731e+000, -4.197814e+000, -8.412211e+000, 4.680991e+000, -1.668515e+000, 2.036139e+000, -6.712818e-001, -4.143736e+000, 4.934265e+000, -2.822873e+000, -3.557359e-001, -3.196855e+000, -4.962804e+000, 3.789311e+000, -1.554012e+000, 2.035747e-001, 3.324792e+000, 1.384280e+000, -1.121810e+000, 1.306709e+000, 4.967410e+000, -2.078442e+000, 5.327488e-001, 1.331789e+000, 3.287223e-001, -3.279112e+000, -5.761687e-001, 1.538348e+000, 2.537106e+000, 5.962575e-001, 2.327475e+000, -6.820593e-001, 4.820858e-001, -3.284450e+000, -1.425437e+000, 3.787496e+000, 2.897980e+000, 5.036323e+000, 8.794544e-001, -2.107178e-001, -2.041274e+000, -1.923766e+000, 1.979054e+000, -1.394602e+000, -1.544728e+000, 6.279212e-001, -1.115991e-001, 1.598790e+000, 2.272951e+000, -1.096493e+000, -2.773527e+000, -2.820894e+000, 1.705953e+000, -7.660718e-001, -1.516539e+000, -2.971770e-001, 2.268524e+000},
{-8.516721e+000, 5.357947e+000, 9.428202e+000, -3.903663e+000, 5.197039e+000, -3.337863e+000, -3.797661e+000, -5.245055e-001, -3.156228e+000, 1.707987e+001, 2.729693e+001, -6.079024e+000, 1.642744e+001, 1.229937e+000, 3.034427e+000, 1.285527e+001, 1.891890e+001, -1.155942e+001, 6.145193e+000, 2.595104e+000, -7.141070e+000, 1.232864e+000, 6.296118e+000, -4.650215e+000, -3.770330e+000, -5.239999e+000, 3.915276e+000, 2.135644e+000, 1.929180e+000, 1.536681e+000, -2.692111e+000, 2.592042e+000, -2.927553e+000, -3.822713e+000, 1.707148e+000, 5.123187e+000, -5.927445e-001, 4.378507e-001, 3.277350e+000, 5.141549e+000, -1.605560e+000, -6.044805e-001, -6.550297e-001, -1.581030e+000, -1.336032e+000, -2.616411e+000, 4.152873e+000, -2.437475e+000, -1.395783e+000, -5.244638e-001, -2.600906e+000, -2.115957e+000, -2.720777e+000, 8.527432e-001, -2.520532e+000, 3.140855e-001, -2.945968e-001, 3.340474e+000, 2.423093e+000, -1.329575e+000, 1.268068e+000, 1.845631e+000, 3.765648e-001, -3.011360e-002, -2.566679e+000, 6.481317e-001, 3.840400e-001, 7.371942e-001, 1.117810e-001, 8.992456e-001, 1.029222e+001, -8.162279e+000, 8.122376e+000, 3.294052e-001, -2.795402e+000, -1.291765e+000, 3.150670e+000, -4.370242e+000, 8.480348e+000, -5.517953e+000, 9.665046e+000, 1.286711e+001, 1.042753e+001, 1.223291e+000, -1.454304e+001, 8.909017e+000, 1.247569e+001, 1.517456e+001, -1.289775e+001, -1.241187e+000, 1.148915e+001, 1.347597e-001, -8.901542e+000, -1.023806e+001, -9.514541e+000, -8.707217e+000, 1.286766e+001, -2.080885e+000, 4.276875e+000, 1.398967e+000, -7.375219e-001, 2.469486e+000, -5.529044e+000, -1.011473e-001, -4.033411e-002, -1.910326e-001, 3.107683e-002, -3.059549e+000, 9.211549e-001, -9.117034e-001, 7.488589e-001, 3.263001e+000, -1.629514e+000, 1.157183e+000, -1.810951e+000, 1.885167e+000, -2.284279e+000, -2.203657e-001, 2.652088e-001, -4.923619e+000, 4.184252e+000, -3.348542e+000, -2.701683e+000, -6.074508e+000, 1.563736e+000, 3.403027e+000, 2.659651e+000, -1.570969e+000, 8.072258e-001, 1.776631e+000, -5.033574e-001, 3.385733e+000, -9.915318e-001, -2.312442e-001, -3.307943e+000, -3.234439e+000, -1.958495e+000, -2.049893e+000, 9.192134e-001, -1.340219e+000, 1.105047e-001, 2.295549e+000, 1.620012e+000, -6.940048e-001, -7.541825e-001, 2.137926e+000, 1.770437e+000, -2.376798e+000, -1.176712e+000, 8.046336e-001},
{3.410372e+000, 3.267395e+000, -1.448419e+000, 1.432536e+000, 5.946852e+000, -1.378253e+000, -7.015770e+000, -3.547260e+000, 6.106144e-001, 9.409201e+000, 1.272807e+001, -1.736788e+001, -6.282113e+000, -5.568400e+000, 1.440282e+001, 5.207295e+000, -2.126931e+001, -6.205053e+000, 2.768825e+000, 4.223722e-001, -1.367472e+001, 7.117035e+000, 9.013982e+000, 1.452923e+001, -3.571048e+000, -3.947888e+000, -7.467889e+000, -3.761179e+000, -2.314582e+000, -1.128227e+000, 1.307830e+000, 2.469153e+000, -5.101961e+000, 3.326616e+000, -1.126354e+000, -6.679239e+000, 6.556987e+000, -1.687868e+000, 5.344871e-001, 1.662002e+000, -3.016815e+000, -8.956377e-001, -4.580469e-001, 1.295734e+000, 6.762779e-001, 7.796826e-001, 1.520595e+000, -5.632176e-001, 7.166965e-001, 3.756095e+000, -2.976427e+000, 1.377184e+000, 5.744429e-001, 5.762335e+000, -3.197566e-002, 9.390834e-001, -1.899192e+000, 2.621319e-001, 3.960590e+000, 2.719236e+000, 1.784870e+000, -1.876681e+000, -1.226532e+000, 1.428804e+000, -1.720710e+000, -2.734184e-001, -3.440189e-001, -1.332310e+000, -3.753291e-001, 3.509459e+000, -3.750124e+000, -3.866956e+000, 5.835581e-001, -1.006657e+000, -5.767432e-001, -2.283449e+000, -3.279526e+000, 4.305170e+000, -4.278841e+000, -1.450457e+001, 7.296582e+000, -3.665521e+000, -1.470962e+001, 8.247156e+000, 1.160026e+001, 2.679726e+000, -3.579319e+001, -1.345617e+000, 1.588079e+001, 1.611045e+000, -


© ISO/IEC 2004 — All rights reserved

Copyright International Organization for Standardization
Provided by IHS under license with ISO
No reproduction or networking permitted without license from IHS
Not for Resale

4.984931e+000, -4.891444e+000, -2.449040e+001, -7.166698e-002, -4.022057e+000, 1.799539e-001, -3.976458e+000, -3.153082e+000, 3.306057e+000, -1.330654e+000, 3.556063e+000, 1.829147e+000, -1.713786e+000, -9.303263e-001, -2.487397e+000, -9.350601e-001, -8.465674e-001, -3.945193e+000, -2.851178e+000, -1.146908e+000, -1.531228e+000, 3.236695e+000, 1.352917e+000, 2.802393e+000, -1.603734e+000, 1.409311e+000, 1.049778e+000, -1.707539e+000, -1.757465e+000, 2.179199e-003, -1.081325e+000, 4.623389e+000, 7.228223e-001, -1.987638e+000, 4.277122e+000, 1.846891e+000, -1.702390e+000, -4.643477e-001, -9.030703e-001, 1.995957e+000, 2.064905e+000, -5.221441e+000, -2.918238e+000, -6.683519e-001, -7.966425e-001, -2.927755e+000, -1.602092e+000, 8.259967e-001, 3.320233e+000, -3.896371e-002, 1.306037e+000, 8.423732e-001, -1.615719e+000, 2.844148e+000, 1.540607e+000, -1.917828e+000, 9.274578e-003, 1.783948e+000, -1.494437e+000, 1.389181e-001},
{1.865759e+000, 2.077136e+000, -5.886983e+000, 4.322490e+000, -6.382004e+000, -7.741633e+000, -5.768122e+000, 3.596835e-001, -7.379490e+000, -1.180114e+001, 1.097341e+001, -1.245203e+001, 7.271936e+000, -8.151049e+000, 4.025906e+000, 7.507756e+000, 9.007558e+000, 1.943314e+001, 2.052344e+001, 1.252469e+000, 4.341298e+000, -6.664059e+000, -6.716947e+000, 5.037182e+000, 2.341228e+000, 6.664643e+000, -1.573331e+000, -1.755956e+000, -7.244936e+000, 1.937523e+000, -2.932321e+000, 1.925735e+000, 5.151886e+000, -1.979442e+000, 5.133821e-001, 3.834033e+000, 4.144383e+000, -2.904345e+000, 2.440501e+000, -1.592892e+000, 1.539630e+000, -2.807325e-001, -6.421772e-001, 2.766199e+000, 2.076885e+000, 9.009514e-001, -1.704291e-001, -1.736614e-001, 8.239914e-001, -1.194894e+000, 1.420582e+000, 1.200632e+000, -2.436785e+000, -8.966273e-001, -1.997167e+000, 2.863634e+000, -3.061364e+000, -4.486239e+000, 6.477309e-001, -1.180930e+000, 3.534311e+000, -1.649448e+000, -4.965554e+000, 4.337807e+000, 5.306750e+000, 4.026417e+000, 7.771979e-001, -9.083062e-001, 1.102958e+000, 6.965598e-002, -1.836853e+000, -4.525965e+000, -8.683444e+000, 3.666706e-002, 5.730015e+000, 3.508941e+000, -4.888875e+000, 2.822855e+000, -1.719662e-001, 3.998784e+000, -1.117121e+001, 8.879594e-001, -2.146977e+001, -1.544576e+000, 7.810802e+000, 1.482852e+001, 8.659325e+000, -1.266780e+001, -2.086063e+001, 2.220194e+001, -1.998741e+001, -8.738168e+000, -1.033804e+001, -4.650665e+000, 6.006322e+000, -6.648449e+000, -5.340571e+000, 1.196867e+001, 5.397111e+000, 2.420807e+000, 1.419419e+000, -4.448193e-001, -5.790998e+000, 2.664950e-001, -5.277389e-001, 2.738962e+000, -1.587930e+000, 5.232994e+000, 2.184117e+000, -5.433827e+000, -5.468503e+000, -3.914935e+000, -3.373757e+000, 5.451113e+000, -4.118582e-001, -4.969874e-001, 2.383053e+000, 1.501316e+000, -2.059880e-001, 5.654356e+000, 4.165244e+000, 8.420544e+000, -4.699649e-003, 1.863400e+000, -7.451801e-001, 8.735188e-002, 2.166448e+000, -1.264599e+000, 2.202289e+000, 4.058130e+000, 3.154605e-003, -2.779194e+000, -9.838415e-001, 2.210954e+000, 1.005951e+000, -3.291280e+000, 9.136004e-001, -2.961725e-001, -1.122223e+000, 4.141190e-001, 9.434964e-001, -4.416626e+000, -1.741265e+000, -1.536779e-001, 2.857817e+000, -8.327696e-001, 1.479169e+000, -2.714775e+000, -9.186026e-001, -4.169396e+000},
{-3.057314e+000, -3.429240e+000, -2.274489e-001, -2.242398e+000, 6.985192e+000, 1.107669e+000, -5.501316e+000, 2.916740e+000, 6.047264e+000, -8.656769e+000, -6.095352e+000, 1.448364e+001, -1.894169e-001, 8.739486e+000, -8.080188e+000, 5.939719e+000, 2.391719e+001, 1.013043e+001, 7.707292e+000, -2.125545e+001, -1.658018e+001, 6.513676e+000, 1.389763e+001, -1.774793e+000, -5.319100e-001, 5.271578e-001, -1.361532e+000, -7.568414e+000, 5.964494e+000, 1.071501e+000, -4.404244e+000, 6.140572e+000, -1.533766e-001, 5.483742e+000, 2.438477e-002, -4.540384e+000, -5.230806e+000, -1.543649e+000, 3.763008e+000, 3.518691e+000, 2.687318e+000, -6.296114e+000, 2.527196e+000, -1.531267e+000, 6.787977e-001, 1.615067e+000, -5.263091e+000, -8.695450e-002, 1.946635e+000, -8.629907e-001, 7.755557e-001, -8.846781e-001, -2.860595e+000, 9.296040e-001, -1.026032e+000, 2.951437e+000, -4.057858e+000, -2.781032e+000, -1.700688e+000, 1.333967e+000, -3.979035e+000, -6.884440e-001, 5.512314e+000, 9.349374e-001, -2.279047e-001, -1.648834e+000, 3.778686e-001, -2.118470e+000, 2.108863e+000, -6.138245e-001, 2.751256e+000, 1.165846e+000, 3.666826e+000, 4.177568e+000, -6.509668e-001, -7.001488e+000, -3.511682e-001, 8.684672e+000, -7.602405e+000, 6.870523e+000, -2.449085e+000, 4.219760e+000, 7.823898e+000, -5.772516e-002, -2.198957e+000, 1.554225e+001, -2.184185e+001, 5.151277e-001, 2.159230e+001, 3.729578e+001, -2.133434e+000, 1.553390e+001, 9.172750e+000, -1.514645e+001, 4.740611e+000, 3.913827e+000, 5.497842e+000, 2.276850e+000, 2.586260e+000, -8.088484e+000, -3.222679e+000, -6.999814e+000, -7.667192e-001, -3.205487e+000, -1.136293e+001, -2.304965e+000, -1.376888e+000, 3.826917e+000, -2.064409e+000, 2.459977e+000, 4.452833e-001, -1.057836e+000, -1.308317e+000, 1.887680e+000, 2.404051e+000, 1.034800e+000, 1.018638e+000, 4.621751e+000, -6.989876e-001, 1.094415e+000, -2.011573e+000, 3.912536e+000, 1.209398e+000, -4.910021e+000, -1.737630e+000, 4.682497e+000, 4.846779e-001, 8.624730e-001, -1.519029e-001, -3.260678e+000, -5.084687e-001, 5.308577e+000, 3.892923e+000, -2.157536e+000, 1.532584e-001, 1.874205e+000, -5.126155e-001, -1.991447e+000, 1.793039e-001, 8.457439e-001, 1.337608e+000, 2.813841e+000, 1.393100e-001, 3.998331e-001, 1.025209e+000, -1.526484e+000, 3.075150e+000, -1.530297e+000, 4.888607e-001, -1.966659e+000},

© ISO/IEC 2004 — All rights reserved


--`,,```,,,,````-`-`,,`,,`,`,,`---
Copyright International Organization for Standardization
Provided by IHS under license with ISO
No reproduction or networking permitted without license from IHS
Not for Resale

{1.139099e+000, -4.349487e+000, 5.740802e+000, 6.726603e+000, -7.788582e+000, -2.289641e+000, -1.869224e+000, -4.337877e+000, 5.115704e+000, 7.361063e+000, -1.100879e+001, 3.481136e+000, 1.118029e+001, 1.014858e+001, -4.860008e+000, 1.205494e+001, -1.585366e+001, 1.204869e+001, 3.974146e+000, 1.870273e+001, -1.195251e+001, -1.052984e+001, 1.633028e+000, -4.220167e+000, -9.963401e-001, 2.275614e+000, 8.665980e+000, -1.057091e+001, -1.126897e+000, 5.278680e+000, 3.042299e-001, -9.729190e+000, 4.063280e+000, -7.586852e-001, 3.561309e-001, -1.352889e+000, -1.182627e+000, 3.050551e+000, -9.634535e-001, 1.866610e+000, -2.980035e+000, -4.056499e+000, 2.636526e+000, 8.364757e+000, 7.786747e-001, -5.607714e-001, -1.197808e+000, -1.972509e+000, 2.401466e+000, 3.021727e+000, -5.404635e-001, -4.922749e-001, -4.785642e-001, -1.578688e+000, -3.373146e+000, -1.309200e+000, -1.987965e+000, 1.071885e+000, -4.987212e+000, -2.463673e+000, -3.142104e+000, -1.680143e-001, 1.035092e+000, -2.734145e-001, 6.806413e-001, 2.469586e+000, -1.387772e+000, 2.115346e+000, 1.106238e+000, -2.391206e+000, -9.795895e-001, 2.991042e+000, 1.101550e+000, -5.781703e+000, 7.178678e+000, 2.292188e+000, 1.154329e+001, -1.037021e+001, -2.722847e-001, 2.754431e+000, -2.336247e-001, -1.243614e+001, -7.919325e+000, -2.405478e+000, -3.059758e+001, -1.328182e+001, 1.380354e+001, 8.426759e+000, 1.421995e+001, 2.246376e+001, 6.838441e+000, -1.066836e+001, -1.469392e+001, 6.066103e+000, -4.780766e-001, 6.669969e+000, -6.145063e+000, -4.486838e+000, -5.800514e+000, -4.968988e+000, -2.240374e+000, -6.470128e+000, 3.408908e+000, -3.005416e-001, 6.485333e+000, -3.882498e+000, -2.227382e+000, -2.183582e+000, 1.667480e+000, -2.316711e+000, -4.393037e-002, 2.667758e+000, -5.113176e+000, -1.616083e+000, -6.447281e-001, -4.273870e-001, -4.654619e+000, -3.733487e-001, 5.182956e-001, -1.144271e+000, 1.790931e+000, -3.254997e+000, 2.326107e+000, -4.103090e+000, 1.006055e-001, -1.956028e+000, 1.665337e+000, -1.971103e+000, -3.834578e+000, -3.878188e+000, 7.118077e-001, 8.414349e-001, 4.443022e+000, 2.561761e+000, 1.002698e+000, 2.015969e+000, 7.575093e-001, -2.055183e-001, -7.278164e-001, 2.920961e+000, 9.177207e-001, -2.370488e+000, 2.093782e+000, 3.553584e+000, -2.126598e+000, 1.684805e+000, -1.484186e+000, 2.387639e+000, -2.362906e+000, -2.119022e-001},
{-4.911797e+000, -3.514652e+000, -8.511185e+000, 3.534815e+000, -9.812892e-001, 1.661127e+000, 5.792768e+000, -2.324238e+000, -1.025466e+000, -4.872632e+000, 8.131533e+000, -6.942465e+000, 1.259615e+001, -1.547742e+001, -1.320460e+001, 2.331709e+001, -1.613052e+001, 3.960268e+000, 7.993764e+000, -2.331345e+001, 1.382482e+001, 1.191295e+001, -1.798118e+001, 2.694750e+000, -5.383407e+000, 4.224782e+000, -2.130139e-001, -2.978653e+000, 1.613587e+000, -2.012035e+000, 1.858953e+000, 8.145735e-001, 9.535046e-001, 1.121944e+000, 7.253625e-001, -2.479667e-001, -4.230722e+000, -5.274102e+000, -4.144813e+000, -4.000129e+000, -3.938110e-003, 2.713071e+000, -1.212989e+000, 5.488258e+000, 2.518716e+000, 2.056898e+000, -6.309623e+000, -1.485559e+000, -4.876738e-001, 3.127251e+000, -1.149220e-001, -1.604650e+000, -5.261728e-001, -1.396490e+000, -1.269528e+000, -6.031204e-001, 2.374723e-001, 4.820294e+000, -2.498330e+000, 2.551200e-001, -4.390477e-001, -7.169823e-001, 2.176432e+000, -2.380601e+000, -7.882439e-001, 2.508414e+000, 1.104708e+000, -1.172101e+000, -1.060445e+000, -5.884775e-002, 6.501260e+000, 4.832608e+000, -9.675724e+000, -1.395177e+000, -3.206813e+000, -3.603504e+000, 2.448113e+000, -9.458051e+000, 6.576997e+000, -3.586944e+000, -7.658811e+000, 4.523141e+000, 2.065940e+000, 6.206372e+000, -1.327457e+001, -8.078681e+000, -1.168092e+001, -3.093080e-001, -5.156224e-001, -1.295520e+000, 2.082100e+001, 8.458616e+000, 4.553854e+000, 1.833618e+001, 7.079124e-001, -8.727775e+000, -9.082502e+000, 1.357256e+001, 1.285268e-001, 4.353427e+000, 8.436245e+000, -8.051372e+000, 4.544193e-001, 4.024343e+000, -9.459162e+000, -8.307939e+000, 5.897396e+000, -5.092511e+000, 3.659533e-001, -5.674360e+000, -6.563092e-001, -1.119590e+001, 5.996696e+000, -5.154309e+000, -1.632381e+000, 7.456346e+000, -2.877522e-001, 2.195726e+000, 2.946697e+000, 1.667656e+000, -7.992768e-001, -3.214695e-001, 1.684143e-001, 5.392268e-001, -7.267133e-001, 1.898799e+000, -1.436176e+000, 3.233571e+000, -6.729613e-001, 3.310873e+000, -1.688300e+000, -8.268748e-001, 3.375981e+000, 5.153130e+000, 1.787977e+000, 1.852994e+000, -4.392438e+000, 1.829185e+000, -4.271111e-001, 3.316754e+000, 2.210917e+000, -3.743196e-001, -1.064554e+000, -1.214324e+000, -5.454451e-001, -4.348138e+000, -8.583575e-001, 9.466319e-001, 2.228802e+000, -1.847814e+000},
{-2.687599e+000, -3.317665e+000, 1.559349e+000, -3.976379e+000, 2.845199e+000, -5.523196e+000, 2.720693e+000, -7.803048e+000, 1.454800e+001, -1.251315e+001, 1.753624e+000, 2.068544e+000, 2.966379e+001, -6.181802e+000, 1.245685e+001, 4.272926e+000, 6.051214e+000, 1.158836e+001, -1.616519e+001, 5.117659e+000, -3.216098e+000, -1.370684e+001, -8.966790e+000, 2.846613e+000, -6.988871e+000, -9.883007e+000, 1.636958e-001, 4.034382e+000, 1.982219e+000, -8.335752e+000, -2.905674e+000, 6.682758e+000, 8.403363e+000, 4.869730e+000, 4.753608e+000, -3.324245e+000, -3.033957e+000, 3.432345e+000, -4.118186e+000, 5.201095e-001, -3.971095e+000, 5.029214e+000, 1.780646e+000, -3.369317e+000, 1.858416e+000, 3.193115e+000, -4.184520e+000, 1.468241e+000, 1.416930e+000, -1.534364e+000, -4.196775e+000, -3.678967e+000, -4.432675e+000, 4.422615e+000, 3.631877e+000, -1.030579e+000, 1.092977e+000, -2.010876e+000, 1.701445e+000, 2.825797e+000,


© ISO/IEC 2004 — All rights reserved

Copyright International Organization for Standardization
Provided by IHS under license with ISO
No reproduction or networking permitted without license from IHS
Not for Resale

-1.219094e+000, -4.134677e+000, -1.905228e-001, -2.646373e-001, 4.128939e-001, 5.413274e-001, -1.357296e-002, 4.556468e+000, 9.731431e-001, 3.681493e+000, 3.197415e+000, 3.049399e+000, 4.844690e+000, 2.868975e+000, 4.393681e+000, -6.971243e+000, -4.308825e+000, -9.832510e+000, -6.510199e+000, -8.023928e-001, -1.086219e+001, -2.109123e+000, 3.547327e+000, 9.480922e+000, 6.750616e+000, -5.225059e-001, -1.620183e+001, 4.185451e+001, 1.079847e+000, -1.226169e+001, -1.003114e+001, 6.888744e-001, 1.363760e+001, -8.252807e+000, 6.902394e+000, 5.935913e+000, -4.087278e+000, -5.950416e+000, -6.508802e+000, -3.477210e+000, 1.595963e+000, -4.207107e+000, 2.148040e-001, 6.573739e+000, -4.331265e+000, 1.548034e+001, 6.662077e-001, -2.860726e+000, 5.919350e-001, -6.766717e+000, -8.436983e+000, -4.655889e+000, -2.573048e+000, 4.728748e+000, -5.934275e+000, -5.270429e+000, 3.225306e+000, 6.732645e+000, -2.056209e+000, -1.764523e+000, 1.473255e+000, -4.124522e+000, -2.283604e+000, -3.028348e+000, -4.509467e-001, -9.444673e-001, -8.622200e-001, -4.846078e+000, -2.645819e+000, -1.388936e+000, -1.442301e+000, -5.792163e+000, 7.113566e-001, 5.022726e-001, 1.352151e+000, 1.055678e+000, -2.812082e+000, 1.108928e+000, 1.212571e+000, -3.948499e-001, -1.163561e+000, 2.850825e-001, 2.482360e+000, -1.509795e-001, 4.148581e+000, 3.721039e+000, 4.324060e-001, 2.285272e+000, -2.199610e+000, -2.282482e+000},
{4.284789e+000, -1.809092e+000, 4.560153e+000, 7.275069e-001, 1.126682e+000, -8.985963e-001, -4.070409e+000, -7.122858e+000, -7.435489e+000, -1.659365e+000, 5.544014e+000, 6.515668e+000, -5.845089e+000, 9.530183e+000, -2.371634e+001, -9.535128e+000, -1.290877e+001, 5.283018e+000, 1.214127e+001, -8.700741e+000, 3.865491e+000, 8.916979e+000, -3.027571e+000, -1.450709e+000, -9.850507e+000, -2.820693e+000, -7.230995e+000, 4.301130e+000, -9.416510e+000, -2.996376e+000, -3.047867e-001, -4.389480e+000, -7.253029e+000, -4.235148e+000, 3.752914e+000, 5.043847e+000, 1.444361e+000, 3.447180e+000, 2.174905e+000, -7.787980e-001, -6.602130e-001, -1.003256e+000, 9.076853e-001, -3.119464e-001, 3.526310e+000, -4.743575e+000, 7.123661e-002, 1.372651e+000, 1.062465e+001, -2.141263e+000, -1.918146e+000, -2.656000e+000, 9.419582e-001, 5.853056e+000, -3.072333e+000, -3.560444e+000, -2.328368e+000, -4.751815e+000, 9.959225e-001, 1.476207e+000, 2.222320e+000, -2.723776e+000, 3.173844e+000, -2.902249e+000, -2.037172e+000, -1.985638e+000, 1.911659e+000, -1.300334e+000, 4.099076e-001, 5.845004e+000, -5.389069e+000, 1.587312e+000, 3.308781e+000, -1.835295e+000, 3.994049e+000, -2.827926e-001, -1.364670e+000, 5.871944e-001, 5.201018e+000, 7.564187e+000, 7.329063e+000, 7.181573e+000, -7.893161e+000, -1.489820e+001, -2.148941e+000, 3.213568e+000, 1.130009e+000, 3.869144e+001, 7.931593e+000, -1.779504e+001, -2.399114e+001, 1.714148e+001, -1.524540e+001, 1.869488e+000, -8.765966e+000, -1.789128e-001, -8.754165e+000, 1.312860e+001, -2.628025e+000, 2.194567e+000, 7.553960e+000, -9.564841e+000, -1.435821e+000, -1.128076e+001, -3.282202e+000, -1.768222e+000, -2.712574e+000, -1.510787e+000, -2.492539e+000, 6.806979e+000, 6.435337e+000, 2.737107e+000, -4.769836e+000, 6.471277e-001, 1.498818e+000, -2.679395e+000, -3.944069e+000, -1.388491e+000, -1.325680e-001, 1.584115e+000, -6.342026e+000, -2.890740e+000, -1.982342e+000, -2.791099e+000, -1.340134e+000, 6.635777e-001, -4.303784e+000, 3.704617e+000, 4.411443e+000, -2.757766e+000, 1.253548e+000, 5.045005e+000, -4.176756e+000, 3.062952e+000, 1.084992e+000, -8.661960e-002, -2.034415e+000, 4.059775e+000, -9.500490e-001, -1.032667e-001, -2.025554e+000, 3.790344e+000, -3.556169e+000, -1.278911e+000, -2.417668e-001, -3.884374e+000, -9.868298e-001, -1.607292e+000, -3.086282e-001, -1.581480e+000},
{1.539312e+000, -5.525518e+000, 8.368405e+000, -2.501426e-002, 2.410285e-001, -1.562292e+000, 1.295869e+000, -1.672016e-001, -9.771525e+000, 8.565552e+000, 1.171175e+001, -6.254062e+000, -1.567923e+001, -2.189877e+001, -2.133937e+001, 1.624318e+000, 7.276445e+000, 2.193214e+001, -1.293499e+000, 1.555144e+001, -8.917646e+000, -1.255661e+001, 3.784056e+000, 3.715977e-001, 1.273979e+001, -1.983519e+000, -2.386362e-001, 2.567916e+000, 1.438432e+001, 1.235053e+000, 3.530435e+000, -8.064692e+000, -7.763251e+000, 5.387802e+000, -3.352116e+000, -3.204246e+000, -8.415966e-001, 3.838920e+000, -6.174591e+000, 6.561979e-001, -2.194893e-001, -9.966907e-002, -2.132212e+000, 2.105121e-001, 3.246471e+000, 9.865040e+000, 4.085168e+000, -3.601912e-001, 4.096663e+000, 1.928712e+000, 1.355425e+000, 3.449462e-001, -2.471636e-001, 1.727560e+000, -2.577988e-001, -4.276393e+000, 3.847606e+000, -1.983236e+000, 1.003022e+000, 2.011160e+000, -4.199396e+000, 8.586306e-001, 4.303451e+000, -2.474526e+000, 1.488424e+000, -1.349939e+000, -8.456297e-001, -1.392094e+000, 4.740910e+000, 2.402613e+000, -2.124899e+000, 5.411446e+000, 5.408283e+000, -1.880161e+000, 1.163307e+000, 8.182371e+000, 4.001727e+000, 3.447625e+000, 8.609288e-001, -5.689086e+000, 6.146861e+000, 5.881626e+000, -1.912507e+000, -9.715007e+000, -6.735131e+000, -1.134755e+001, -2.531189e+001, -3.850924e+000, -1.194940e+001, -1.681505e+001, -1.842450e+000, -5.198870e+000, 1.966901e+001, -5.841471e+000, -3.028624e+000, 1.311048e+001, 9.597214e+000, 4.065038e+000, 4.637393e+000, -1.985703e+001, 1.370031e+001, -1.202970e+001, -4.441762e+000, 8.030881e+000, 1.222987e+001, -3.493836e+000, -4.687499e+000, 3.731085e+000, 7.264189e+000, 4.584891e+000, -1.470491e+000, 7.582023e-001, -8.716790e+000, 2.297486e+000,

© ISO/IEC 2004 — All rights reserved


--`,,```,,,,````-`-`,,`,,`,`,,`---
Copyright International Organization for Standardization
Provided by IHS under license with ISO
No reproduction or networking permitted without license from IHS
Not for Resale

2.062829e+000, 2.992273e+000, 3.880475e-001, -3.141690e+000, -3.213487e-001, 4.262505e+000, -9.287640e-001, -7.525228e-001, -6.952127e+000, -2.281855e+000, 2.853379e+000, -6.792873e-001, 2.670074e+000, 1.204222e+000, -5.248764e-001, -4.134052e+000, -2.205663e-001, -1.396945e+000, 4.600402e+000, 7.530041e+000, 3.816721e+000, 8.773259e-001, -4.011191e+000, 1.804699e-001, -2.805032e+000, 6.449443e-001, -4.163276e+000, -3.372356e+000, -1.450471e+000, 7.276519e+000, 1.102090e+000, 1.891557e+000, 3.814522e-001, 1.092059e+000, 9.960422e-001, 2.476557e+000},
{-7.313825e+000, -1.326335e+001, 8.615469e+000, -1.082712e+001, -2.102088e+000, 1.928426e+000, 1.214479e+001, -3.735033e+000, 5.957514e-001, -2.078846e+000, -3.080538e+000, -1.432254e+000, 1.484963e+000, -1.010658e+001, 1.418990e+001, -2.077606e+000, -5.258712e+000, 4.252920e+000, 2.800670e+001, 8.513724e+000, -5.154822e-001, 1.501268e+001, 1.575054e+001, -3.292505e+000, -1.651962e+000, -1.470922e+000, -1.900181e+000, 1.074260e+001, 8.033609e+000, -9.263337e+000, 8.096630e+000, -3.646481e+000, -3.494910e+000, -7.094758e+000, -2.720802e+000, 2.527985e+000, -5.729442e+000, 2.594676e+000, 6.247631e+000, -1.078214e+000, 4.657131e+000, 8.653263e-002, 7.658251e-001, 5.304161e-002, 1.909659e+000, 2.395273e+000, 9.090503e-001, 5.227050e-001, -2.926588e+000, -4.754208e+000, -3.148565e+000, -3.465394e+000, 2.283220e+000, 3.576638e+000, 3.804050e+000, -3.688334e-002, 1.275789e+000, 7.858249e+000, 2.338766e+000, 3.812477e-002, -1.873019e+000, -1.347754e+000, -7.194251e-001, -2.231639e+000, 1.960478e+000, -7.104598e-001, 2.500477e+000, 1.493928e+000, -2.265469e+000, 9.890549e-001, 8.300711e+000, 1.413819e+001, 1.113701e+001, 4.542393e+000, 3.679575e+000, 1.887472e+000, 1.142198e+000, 1.994192e+000, -1.027155e+001, 6.362404e+000, 2.165713e+000, 4.464067e+000, 5.441209e+000, 4.891522e+000, 1.012682e+001, -1.085220e+001, 1.902472e+000, 7.270724e+000, 4.387267e+000, 2.207310e+000, 9.335852e+000, -1.495615e+001, 1.458434e+001, -9.647057e+000, -2.492217e+001, -1.278278e+000, -1.586261e+001, 7.500759e+000, -1.525769e+001, 4.549248e+000, -8.513389e+000, 3.726352e-001, -3.231719e+000, 2.472478e+000, 3.533562e+000, 5.692229e+000, 1.215873e+001, 2.068088e+000, -4.220600e+000, -1.144189e+001, 3.070374e-001, -1.090558e+001, 3.206106e+000, -2.730158e+000, 5.150734e+000, -1.107821e+000, -5.528378e+000, 5.720876e-001, -1.120841e+000, -4.797040e+000, -4.360692e+000, -3.007985e+000, -2.657975e+000, -5.130983e+000, -1.176276e+000, -3.926984e+000, -3.269860e-001, 2.101400e+000, 2.284050e+000, 7.808426e+000, -2.165449e+000, -3.816884e+000, -4.438138e+000, 2.432110e+000, 4.299332e+000, -1.938603e+000, 6.888215e-001, -1.532127e+000, -3.865611e-001, 1.239375e+000, 3.013748e-001, -5.003062e-001, 1.375952e+000, -4.372426e+000, -1.202547e-001, -6.050705e-001, -3.628871e+000, 4.956208e-001, -2.410229e+000, 3.183732e+000},
{-5.954780e-001, -4.351143e+000, -7.931076e-002, -1.385365e+000, -5.872820e+000, 8.191529e-001, 5.468369e-001, 7.565100e+000, -8.159484e+000, -3.759098e+000, 4.714420e-001, 1.251596e+001, 9.333747e+000, 2.635105e+001, 1.170308e+001, 6.843106e+000, -1.173280e+000, 7.722828e+000, -1.382418e+001, -3.597370e-001, -1.736667e+001, 2.020438e+001, -1.115387e+001, -1.270719e+000, 3.400704e+000, 2.744200e+000, 1.115672e+001, 5.429372e+000, -4.237385e+000, 2.070376e+000, 6.537146e+000, 5.928262e-002, -1.164509e+001, -6.422186e+000, 1.458485e+000, 4.942242e+000, -3.562143e+000, -3.969537e+000, 8.912417e-001, 4.941921e+000, -3.619341e+000, -5.363870e+000, -6.258193e+000, 8.102787e-001, -2.732525e+000, 1.910638e+000, 2.372393e+000, 2.746155e+000, 3.332211e+000, -1.036197e+000, 4.082541e-001, -2.829310e+000, 5.357937e+000, 1.057263e+000, 1.752709e+000, -4.080534e+000, 1.625595e+000, -1.467655e+000, 1.641338e+000, -2.490836e+000, 2.647445e-001, -3.040439e-001, -3.034955e+000, -2.023321e-001, -1.189749e+000, 2.973604e+000, -1.155434e+000, 5.717562e-001, 1.478786e+000, -2.080396e+000, 4.160133e-001, 3.982965e+000, -3.074656e+000, 3.772991e+000, 4.586535e+000, 6.585185e+000, 3.522730e+000, 1.085316e+001, 5.764514e+000, 4.488322e+000, -9.500608e+000, 7.212943e-001, 2.173491e+000, -1.289864e+001, 2.625851e+000, -4.135664e+000, -2.296756e+001, -4.261748e-001, -2.446465e+001, -5.028105e+000, -1.414979e+000, -2.442149e+001, -1.659152e+000, 2.303019e+001, -7.104044e+000, -4.056209e+000, 2.167802e+001, 8.946835e+000, 8.048964e+000, -3.104650e+000, -3.407540e+000, 4.284381e-001, 9.062162e+000, -1.722866e+001, -3.512792e+000, -3.487671e-001, 3.772397e+000, 1.357943e+001, -9.982280e+000, 3.741544e+000, -3.936988e-001, 4.553908e+000, -2.177621e+000, -3.898545e+000, 1.383946e+000, -1.137869e+000, -1.280032e+000, 5.062804e+000, -1.332282e+000, -3.642149e+000, -1.338836e-001, -1.073267e+001, -2.192205e+000, -2.523036e+000, 8.542124e-001, -6.494464e+000, -1.607727e+000, -3.680145e+000, -1.564277e+000, -2.388893e+000, -5.763229e+000, 1.213845e+000, -5.079897e+000, -1.710525e+000, -8.292310e-001, -4.706640e+000, 2.730529e+000, -2.629358e+000, 2.770977e+000, 3.300066e+000, 3.096233e+000, 7.173361e+000, 1.685823e+000, 6.869733e-001, -1.549397e+000, -4.237387e+000, -3.747482e+000, 3.152694e+000, 1.402409e+000, -6.216690e-001},
{6.228276e+000, 3.810748e+000, -5.357126e+000, 4.481346e+000, 3.073850e+000, -4.324840e+000, 1.273117e+000, 2.363897e+000, 4.714104e+000, 1.560643e+000, -1.271016e+001, -8.977038e+000, 1.316421e+001, 1.956372e+001, -1.932466e+001, 5.135170e+000, -2.907894e+000, -2.203947e+000, -2.820435e+000, 7.336889e-001, 2.823145e+001, 8.781225e+000,


© ISO/IEC 2004 — All rights reserved

Copyright International Organization for Standardization
Provided by IHS under license with ISO
No reproduction or networking permitted without license from IHS
Not for Resale

1.939794e+001, 1.654537e+001, -4.506675e+000, -3.344366e+000, -1.646830e+000, 5.119435e+000, -7.542136e+000, -7.583110e+000, 2.433972e+000, 9.894352e-001, 1.401543e+001, 9.274468e+000, 1.341294e+000, 2.023405e+000, -1.866030e+000, 1.155798e+001, 2.671539e+000, -2.508592e+000, -1.466576e+000, 5.238088e-001, 3.237118e+000, -5.969545e+000, 4.858304e+000, -4.823653e+000, -2.565647e+000, 1.383100e+000, -3.188997e+000, -1.593538e+000, 3.460221e+000, 3.911002e+000, -1.368654e+000, 5.350675e+000, -1.519019e+000, 2.852397e+000, -3.053570e+000, -2.442359e+000, 2.466290e+000, -4.374815e+000, -1.320788e+000, 1.804330e+000, 1.966773e+000, -3.181836e+000, 4.066959e-001, -6.847906e-001, 3.124086e+000, 2.295610e+000, 9.169154e-001, -4.142419e+000, -7.796724e+000, -4.598875e+000, -6.134605e+000, -2.039871e+000, -2.552098e+000, -2.138584e+000, 1.110926e+001, -6.403651e+000, 6.445286e+000, -1.507648e+000, -2.523822e+000, -7.009702e+000, 3.613308e+000, -1.268494e+000, 2.954540e+000, 4.952733e+000, -1.185101e+001, -6.814794e-001, -2.219559e+001, 2.532471e+000, 5.151689e+000, -2.559664e+000, -9.019998e+000, -2.134112e+001, -8.235411e+000, 3.477399e+001, -4.543949e+000, 1.784924e+000, 1.160492e+001, 1.259108e+001, -6.591350e+000, -1.170689e+001, 4.919743e+000, 8.907474e-001, -7.045303e+000, -2.469688e+000, 7.058615e+000, -3.245751e+000, 5.435272e+000, -1.744935e+000, 4.316247e+000, -9.631656e+000, 1.015992e+001, -5.602746e+000, -1.056966e+001, 2.861219e+000, -4.457608e-002, 2.911641e+000, 1.700305e+000, 6.797250e+000, 4.498711e+000, -9.356421e-001, 2.256013e+000, 6.706980e+000, 4.338611e-001, 3.826265e+000, 1.893685e+000, 5.510248e+000, -4.737419e+000, -4.270452e-001, -2.674970e+000, 3.338314e+000, 3.770595e+000, 6.339656e-002, -1.117040e+000, 1.049507e+000, 2.839323e+000, 5.028579e+000, -4.819563e+000, 1.518971e+000, 1.376233e+000, 2.912786e+000, 4.183301e+000, -3.469098e+000, -6.544633e-001, -1.490460e-001, -3.753273e-001, 3.066994e+000, 1.465262e+000, -2.775464e+000},
{-2.322756e+000, 5.671741e+000, 4.220287e-001, -6.495979e+000, 4.696388e-001, 5.508246e+000, 1.622614e+000, 1.219795e+001, -1.302996e+000, -8.983298e+000, -8.465621e+000, -1.633782e+001, -7.643931e+000, -8.597561e+000, -1.011695e+001, -9.133362e+000, -5.784745e+000, 5.438827e+000, -5.334565e+000, -5.577087e+000, -1.672252e+001, -3.096098e+000, 1.587805e+001, -2.502175e+001, -1.460832e+001, 1.967209e+000, 3.404487e+000, -5.808896e+000, -4.767447e+000, -4.927742e+000, 3.596482e+000, 2.328563e+000, -3.090912e-001, -2.133307e+000, 8.726074e+000, 4.554349e+000, 1.645922e+000, 3.560869e+000, 7.340632e+000, 6.194139e+000, 1.274250e+000, -4.960996e+000, -1.914434e+000, 9.025260e+000, -1.079720e+000, -1.869198e+000, -1.423325e+000, -2.413218e+000, -1.326905e+000, -3.225284e+000, -1.125694e+000, -2.264340e+000, -2.236359e-001, 1.607523e-001, 1.291668e+000, -8.634447e-001, -2.753226e+000, 3.550991e-001, 2.968364e+000, -1.530735e+000, 4.846690e+000, -1.122896e+000, -3.463987e+000, 1.343329e+000, 3.831353e+000, -2.134563e+000, -2.968736e-001, 7.726283e-001, -1.318045e+000, 1.125018e+000, 3.208590e+000, -5.794425e+000, 8.328137e-001, 7.644261e+000, -8.428701e+000, 1.160024e+001, -1.334354e+000, 5.560119e-001, 6.105482e-001, -6.770853e+000, -2.995215e+000, -2.250536e+000, 1.492958e+000, 9.902807e+000, -5.192286e+000, 9.234138e+000, 5.127511e+000, 1.382248e+001, -1.242039e+001, -6.748936e+000, 1.471175e+001, -1.527295e+001, -6.448056e+000, -7.574106e+000, 1.794634e+001, 6.972924e+000, -1.360215e+001, 2.977294e+001, 6.156560e+000, -5.691816e+000, -1.022508e+001, 1.899264e+001, 1.106850e+001, -1.082538e+001, -3.506970e+000, -1.148468e+001, 9.913744e-001, -4.542271e+000, -2.213281e+000, 4.853106e+000, 7.820635e+000, 9.815585e+000, -1.463579e+000, -2.837871e+000, 5.297685e+000, 2.096240e+000, 1.465795e-001, 1.758074e+000, 1.575179e+000, -6.169688e+000, 1.627836e+000, 3.172187e+000, 6.729951e+000, 3.839055e-001, -2.431519e+000, -2.720037e-003, 1.310050e+000, -6.747966e+000, -5.018675e-001, 5.548407e-001, 2.146234e+000, 1.822134e+000, -3.483316e+000, -2.242131e+000, 4.686196e+000, 1.621298e+000, 3.464468e+000, -4.895630e+000, 2.960813e-001, -6.949649e+000, -2.080382e+000, 6.928471e-001, 4.226942e-001, -2.787208e+000, 7.700220e-001, 4.566182e+000, -4.315467e-001, -9.165371e+000, 9.361440e-001, 4.353314e+000},
{4.874362e+000, 9.636120e+000, -9.584377e-001, 1.182186e+001, -2.349936e+000, 3.654732e+000, -6.300939e+000, 1.502646e+001, -1.182434e+001, 1.139520e+001, 2.364055e+000, -1.362713e+001, -3.919243e+000, 9.109399e+000, 5.166661e+000, 1.301924e+000, 6.933040e-001, -1.487757e+001, 1.767158e+001, 9.827078e-001, -1.758506e+000, -1.341825e+001, -1.866936e+001, -7.704119e+000, -5.342859e+000, -1.418431e+001, -9.728172e+000, 9.490204e+000, -6.384384e+000, -1.418340e+000, -5.103788e+000, -4.292002e+000, 2.388101e+000, 8.152879e+000, 4.015579e+000, -3.533030e+000, -2.527342e+000, 5.694332e+000, 2.922589e+000, 4.176770e+000, 2.136585e-001, 1.471118e+000, -5.228241e+000, 6.403246e+000, -3.279926e+000, 2.611450e+000, -9.828713e+000, -1.597161e-001, -4.770295e+000, 5.440623e+000, -1.765273e+000, 6.454609e+000, 4.947166e-001, -7.422133e-001, 1.932663e+000, 2.262266e-001, -7.913240e-001, -9.228350e-001, -1.370251e+000, -1.685904e+000, -3.251335e-001, -2.104552e+000, 7.428295e+000, -2.128720e+000, 8.144579e-001, 7.645655e-001, -2.717463e+000, -4.956687e-001, 1.379968e+000, -2.343163e+000, -5.342006e+000, -1.016341e+001, -9.240181e+000, -6.606381e+000, -

© ISO/IEC 2004 — All rights reserved


Copyright International Organization for Standardization
Provided by IHS under license with ISO
No reproduction or networking permitted without license from IHS
Not for Resale

3.878565e+000, 1.050300e+001, 6.791720e+000, 8.548705e+000, 4.007489e-001, 1.551457e+000, 1.206836e+000, -9.926061e+000, 6.246127e+000, -1.271108e+001, -2.291838e-001, -2.077648e-001, -1.019503e+001, 7.499228e+000, 3.030757e+000, 1.007288e+001, -2.497070e+000, -6.256995e+000, 2.708910e+001, 1.681016e+001, -2.720266e+000, 2.173109e+001, -1.459659e+000, -3.139379e-001, 9.685011e-001, 1.782573e+001, -6.812082e+000, 2.542416e+001, 8.943204e-001, -2.811867e+000, -1.290796e+000, -1.032263e+001, -4.198275e+000, 7.329863e+000, 7.250018e+000, -7.016326e+000, -1.396179e+000, 3.578317e+000, -3.988220e+000, -3.576169e+000, 2.350854e+000, 3.125758e+000, 8.633129e+000, -7.594533e+000, -7.531622e+000, 6.682454e-001, 2.139777e+000, 1.835501e+001, 2.925195e+000, -1.052320e+000, -2.788403e-001, -1.449863e+000, -4.870621e+000, 2.061853e-001, 6.372177e+000, 6.233502e-001, 1.544843e+000, -5.785011e-002, 7.907687e+000, 1.308931e+000, -4.970184e-001, 1.031916e+000, 2.411057e+000, 3.501222e+000, 2.215366e+000, 7.639515e-001, 2.284426e+000, 9.296261e-001, -4.012804e+000, -2.396867e+000, -4.725940e+000, 5.427326e+000, -5.851710e+000, -4.691057e+000, -3.520533e-001, -2.558590e+000},
{6.206579e+000, -1.674623e+001, -8.874358e+000, 2.615467e+000, -8.308067e+000, -6.282567e+000, -4.099841e+000, -1.797295e+000, 1.841821e-001, 3.455563e+000, 4.596331e+000, -2.383974e+000, -7.481786e-001, -1.421344e+001, -1.023436e+000, -9.320661e+000, 6.299787e+000, -7.283630e+000, 2.053667e+000, -7.517341e+000, 1.863231e+001, 4.649464e+000, 8.652331e+000, -1.119362e+001, 1.580072e+001, -2.814761e-001, 6.467400e+000, 2.206292e+000, -2.096023e+001, 1.731974e+001, 4.823135e-001, -1.591095e+001, -6.704846e-001, 4.007444e+000, 1.134159e+001, -1.550494e+000, -3.364327e+000, 2.485957e+000, -1.551087e+001, -1.702404e+000, -3.238830e+000, -8.877273e+000, -1.105323e+001, 3.975938e+000, 3.973951e+000, 1.976393e-002, 9.243359e-001, -6.469299e-001, -3.057772e+000, -4.937488e+000, 9.342941e-001, 3.019489e-001, -1.410882e-001, 4.937960e+000, -3.824842e+000, -2.670034e+000, 4.645622e-002, -4.089068e+000, -5.061162e-001, 3.554524e+000, 3.144218e+000, 1.970750e+000, -3.703993e+000, -4.117584e+000, -3.676092e-001, -2.323624e+000, 2.867745e+000, 9.634796e-001, 5.199046e+000, 2.868977e+000, -8.217056e+000, 1.363357e+001, -1.048205e+001, 3.968819e+000, 1.952791e+001, -1.409451e-001, -2.972091e+000, 2.169116e+000, -5.263451e+000, 4.066030e+000, 9.739043e+000, -7.218305e+000, 1.327765e+000, 3.173583e+000, -1.886345e+000, -6.190340e+000, -5.522470e+000, 1.396209e+001, 1.428276e+000, 1.270597e+001, 6.635856e+000, -9.219024e+000, -6.788335e+000, 3.910588e+000, 4.900211e+000, 5.130600e+000, 2.124355e+001, -1.115277e+001, 7.022003e+000, 1.023302e+001, 7.692114e+000, -5.346556e+000, 1.340601e+001, -1.480365e+001, 6.937470e-001, 1.265846e+001, 1.357097e+001, -1.340452e+001, 1.746753e+001, -3.901322e+000, -1.013141e+001, -1.807795e+000, -1.766763e+000, -9.284910e+000, 1.979685e+001, -4.893871e+000, -5.837442e+000, -3.354347e+000, 7.311191e+000, 6.027826e+000, -3.285490e+000, -3.902206e+000, -3.961895e+000, -4.253572e+000, -6.505718e+000, 2.549051e+000, 1.099353e+000, -4.889021e+000, -1.041348e+000, 2.289861e+000, 1.064789e+000, 9.621083e+000, -1.142530e+000, 1.009975e+000, -2.466399e+000, 2.791739e+000, -4.062044e+000, -5.895509e+000, -8.345412e+000, 1.163916e+000, 1.671039e-002, -3.620494e-001, -5.908555e+000, -4.513283e+000, 6.024958e-001, 2.905355e+000, 2.048315e+000, -1.977053e+000, -9.052514e-001, -2.245643e+000},
{4.419553e+000, 4.724540e-001, 5.601128e+000, -7.868563e-001, -2.933106e+000, 1.707655e+000, 1.048821e+001, 1.138950e+000, 4.567712e+000, -1.359340e-002, 1.330549e+001, -1.524779e+001, 8.661203e+000, 5.639746e+000, 5.334176e+000, 1.119952e+001, -4.536452e+000, 2.434820e+000, -1.332909e+001, 1.703514e+001, 6.738612e+000, 1.083200e+001, -3.459350e+000, -8.832685e+000, 1.000057e+001, 7.790393e+000, -7.787401e-001, 7.654115e+000, -4.000411e+000, -7.846325e+000, -4.044882e+000, -4.703145e+000, -1.374999e+001, -4.718843e+000, 9.694996e-001, 5.304306e+000, 7.382489e-001, -4.434224e+000, 2.196601e+000, -4.327769e+000, 4.413388e+000, -5.780999e+000, 5.481495e+000, -5.010889e-001, -1.964950e+000, 4.976733e+000, -3.633596e+000, 1.753647e+000, -6.298851e-001, 4.533575e-001, 1.548365e+000, -4.255291e+000, -2.173437e+000, -5.167150e+000, 6.686898e+000, -5.110263e-001, 5.220812e+000, 2.414924e+000, -6.016875e+000, 3.891584e+000, 2.541022e+000, -5.729347e-001, 4.387798e+000, -3.021377e+000, -3.102378e+000, -1.164102e+000, -1.231243e+000, -3.176337e-001, -2.481395e+000, -3.785001e+000, -4.960279e+000, 9.155197e-001, 3.485479e+000, -2.808632e+000, -1.894542e+000, 8.194396e+000, 3.587027e+000, -7.741452e+000, -1.084576e+000, -4.125211e+000, -1.726493e+000, -3.365635e+000, -4.422014e+000, 6.229700e+000, 6.297237e+000, -1.056629e+001, 5.282235e+000, -3.138632e+000, 1.723356e+001, 9.571102e+000, -6.124275e+000, 3.738963e+001, -8.011784e-001, -5.906595e+000, -2.967620e+000, 1.007997e+001, -5.202210e+000, 2.932467e+001, 1.457011e+001, -1.354191e+001, 2.726984e+000, 2.340513e+001, 1.385290e+001, -6.361915e+000, 1.142239e+001, 1.782959e+001, 3.967099e+000, 1.308235e+001, -1.021285e+000, 4.958929e+000, -1.032135e+001, -9.009235e+000, -4.925148e-001, -2.460672e+000, 5.771050e+000, 1.411472e+000, 8.523477e+000, -3.999530e+000, -4.440316e+000, -2.858580e+000, 5.894459e+000, -4.749251e-001, -3.630773e+000, 7.420769e+000, -3.198181e+000, -1.547821e+000, -1.389948e+000, -6.301699e-001, -3.087152e+000, 1.156367e+000, -7.801914e+000, -5.238459e+000, 8.365229e+000, -5.922895e-001, 1.196458e+000, -


© ISO/IEC 2004 — All rights reserved

--`,,```,,,,````-`-`,,`,,`,`,,`---
Copyright International Organization for Standardization
Provided by IHS under license with ISO
No reproduction or networking permitted without license from IHS
Not for Resale

8.610076e+000, 2.701329e+000, 1.042870e+000, 3.335054e+000, 3.389912e+000, 2.886615e+000, 3.667820e+000, 4.160748e+000, -5.691188e-001, 7.957014e-001, -2.423639e-001, 9.568012e-001, -5.056714e-001, 5.562045e+000, -5.892290e+000},
{-8.334081e+000, -3.698670e+000, -4.188356e+000, -1.349275e+000, -3.266386e+000, -1.327037e+000, 5.995706e+000, -5.932633e+000, -7.208561e+000, -1.751501e+000, 2.482203e+000, -5.622752e+000, -1.174821e+000, 3.140932e+000, -9.562288e+000, -5.092718e+000, -3.006336e+000, -3.353529e+000, -9.446313e+000, 4.784802e+000, 1.649015e+001, 2.127123e+000, 1.787650e+001, -3.891601e+000, -1.362311e+001, -1.442920e+001, -1.183643e+001, -5.140893e+000, 1.351703e+001, 7.295169e+000, -1.717777e+001, -2.795822e-001, -1.082476e+001, 3.615270e+000, -1.295429e+001, 3.324117e+000, -6.826639e-001, -1.391801e+001, -1.160721e+000, 3.912680e+000, 1.775934e+000, -2.688198e+000, -6.137800e+000, -3.448164e+000, 3.982870e+000, 4.348161e+000, -4.588888e+000, 7.882132e+000, -1.796990e-001, 8.479456e+000, 3.065030e-002, -9.829251e+000, -1.259915e+000, 1.459168e+000, -1.388434e-001, -1.815910e+000, -2.533215e+000, -9.537793e-001, -3.801220e+000, 1.575326e+000, 1.829787e-001, -6.925094e+000, -4.666710e+000, 2.569499e+000, -1.660154e+000, 3.790237e+000, -4.350256e+000, 5.265708e+000, 1.039837e+000, -3.276721e+000, 9.951002e+000, 4.174256e+000, -3.344825e+000, 5.794077e+000, 3.042335e+000, -2.117510e+000, 2.415401e+000, -2.390864e+000, 6.741369e+000, -8.399888e-001, -8.114596e+000, 4.239875e+000, -1.228465e+000, -1.802039e-001, -4.695582e+000, -7.510814e+000, -2.588013e+000, 1.763563e+001, 1.104911e+001, 1.700730e+001, -2.126497e+001, -2.538978e+001, 1.347722e+001, -2.066878e+000, -3.286328e+000, -2.983366e+001, 1.367559e+000, -3.652358e+000, 2.196786e+001, -1.700143e+000, -2.041904e+000, 1.816566e+000, 1.357264e+001, 1.191220e+001, 1.268071e+001, -5.805636e+000, -2.648035e+000, 1.318537e+000, 9.474607e-001, 2.505576e+000, 5.716160e+000, 2.417032e+000, 1.838937e+001, 6.101434e-001, -8.548299e+000, 7.956188e+000, -2.608683e+000, -1.203273e+001, 1.182398e+001, 6.675936e+000, 2.850742e+000, 9.057897e-001, 7.611508e+000, 7.386566e+000, 4.436799e+000, -4.218392e+000, 1.452929e+000, 8.174171e-002, 2.805570e+000, -4.283845e+000, -4.443267e+000, -6.625954e+000, -5.443106e+000, -5.638602e+000, -2.297243e+000, -4.119824e+000, -3.454761e+000, -2.276284e+000, -2.549721e+000, 2.318813e+000, 3.302303e+000, 6.238014e-001, 2.773133e-001, 2.116712e+000, -1.582265e+000, 3.903546e+000, 5.023161e+000, -5.018152e+000, 3.789879e+000, 7.499404e-001},
{1.007722e+000, 7.749073e+000, 1.412961e+000, 3.038133e+000, 1.983095e+000, 3.549245e-001, -2.681745e+000, -2.672599e+000, -1.542827e+000, -5.100689e+000, -2.849268e+000, 9.890549e+000, 1.091887e+001, -1.191693e+001, 3.189201e+000, -1.690422e+001, -2.524520e+001, -5.572406e+000, -3.885513e+000, -1.609249e+000, 6.164934e+000, -8.041062e+000, 8.546121e+000, 1.828646e-001, 1.831852e+001, -2.112630e+001, -5.824098e+000, 1.342097e+001, 7.925634e-001, 7.388700e+000, -2.729949e-001, 1.053105e+001, 2.639278e-001, -4.605160e+000, -9.463014e-001, 1.095242e+001, -1.044083e+001, -1.281018e+001, 9.030606e+000, -7.303424e-001, -4.170599e-001, 1.735112e-001, 1.293190e+001, -6.879849e+000, 4.958627e+000, -3.010123e+000, 1.296507e+001, 2.923344e+000, 6.888271e+000, -1.420855e+000, 2.370260e+000, -1.002160e+000, -2.508925e+000, -3.606165e+000, -5.451943e+000, 3.374269e+000, -3.465376e+000, 5.108576e+000, -4.204208e+000, 1.537557e+000, 5.900328e-001, -3.587849e+000, 1.456283e+000, -1.852745e-001, -9.394488e-001, -3.702234e+000, 2.292512e-001, 2.768818e+000, -2.626026e-001, -3.961555e+000, -8.864929e-001, -8.805021e+000, 3.459990e+000, -7.335807e+000, -1.020263e+000, -2.232477e+000, -3.690316e+000, -6.638823e-001, 6.567339e+000, 3.378714e+000, -4.245548e+000, 8.031387e+000, -9.779407e-001, 4.875577e+000, -2.807349e+000, -1.063842e+000, -3.710857e+000, 1.919122e+000, -6.860947e+000, 1.994459e+001, 9.833827e+000, 3.068438e+000, -6.195529e+000, 7.122838e+000, -4.742778e+000, 2.180442e+001, 3.770736e+001, 3.042604e+001, -1.173534e+001, 1.101645e+001, -5.641443e+000, 4.048604e+000, -6.537797e+000, 8.759595e+000, 5.526181e+000, 7.510997e-001, -1.540279e+001, -3.334737e+000, -1.764385e+001, -3.252530e+000, -5.173067e+000, -3.515787e+000, 1.405119e+001, 7.640920e+000, -6.747043e+000, -5.697796e+000, -5.869637e-001, -2.248078e+000, 1.117711e+001, 7.795350e+000, -5.997815e+000, 6.012074e-001, -2.962131e+000, 6.439874e-001, -1.055494e+000, 1.816906e+000, 2.325735e+000, 1.404125e+000, -2.575690e-001, 2.152810e+000, 7.129189e-001, 2.640999e+000, -4.895791e+000, 3.268373e+000, -4.602969e+000, 1.710674e+000, -7.188629e+000, -6.656093e-002, 3.766262e+000, -2.228052e+000, -5.792311e-001, -5.011483e+000, -9.885383e-001, -2.013501e+000, -3.978583e+000, -4.764210e+000, 4.553453e+000, 2.922852e+000, 4.819173e+000, 2.815266e+000},
{1.432706e+000, 2.525712e-001, 9.588684e+000, 7.595695e+000, -5.252972e+000, 1.293167e+000, 7.116113e+000, 2.677110e+000, 3.396130e+000, -2.939368e-001, -8.668138e+000, -2.939146e+000, 1.386783e+001, -1.200344e+001, -6.726725e+000, 1.502513e+000, 1.651573e+000, -1.488460e+000, 1.482935e+001, -7.588365e+000, -1.487207e+001, 8.741144e-001, -1.740857e+000, 1.848174e+000, 1.703258e+001, -1.151634e+001, -9.820444e+000, -1.862190e+001, -4.331705e+000, 6.456725e+000, 2.206331e+001, 2.744379e+000, -4.967649e+000, -5.196170e+000, -5.547974e+000, 1.051983e+001,

© ISO/IEC 2004 — All rights reserved


Copyright International Organization for Standardization
Provided by IHS under license with ISO
No reproduction or networking permitted without license from IHS
Not for Resale

9.760723e+000, 5.942490e-002, -6.931307e+000, -2.692562e+000, -1.859231e-002, 2.391557e+000, 9.509951e+000, -6.712892e+000, -1.542023e+000, 7.984959e-001, -6.208069e+000, -1.016349e+000, 2.442031e+000, -4.411417e+000, -1.249325e-001, -3.572919e-001, 2.928497e+000, -1.820953e+000, 5.209857e+000, 3.137393e+000, 2.326632e-001, 3.120231e+000, -2.212435e+000, -1.513681e+000, 2.585638e+000, 1.654225e+000, 9.314871e-002, 1.818224e+000, -2.542733e+000, 2.248704e+000, -4.215013e+000, 6.319284e+000, 1.892227e+000, -5.510225e+000, -1.438497e+000, -4.938602e-001, 2.649077e+000, -8.685038e+000, 3.666664e+000, 8.462924e+000, 9.039351e+000, -8.399957e+000, -3.130649e+000, -1.002197e+000, 2.251354e+000, -6.069047e+000, 8.396605e+000, 9.602668e-001, 8.890230e+000, 8.271259e-001, 9.844073e+000, 5.430064e+000, 5.649944e+000, -1.322190e+001, -4.041440e+000, 7.592541e+000, -4.255203e+000, 4.488537e+000, -5.011377e-001, 1.565489e+000, 2.200662e+000, -1.083370e+001, 4.624858e+001, -3.853508e+000, -2.146577e+001, -1.416972e+001, -6.377917e+000, 1.647725e+001, -8.213919e+000, -4.621658e-001, 6.350165e+000, 8.122606e+000, -2.274891e+001, -9.130984e-001, -5.814332e+000, -3.769930e+000, 6.238319e-001, 7.759696e-001, 1.594737e+000, -6.125657e+000, 2.276885e+000, -1.786855e+000, -2.282997e+000, -3.072808e+000, -3.438158e+000, 3.022235e+000, -3.233917e+000, -2.217933e+000, 8.213823e+000, -5.586304e+000, 1.600604e+000, -1.722528e+000, 4.829116e+000, 1.233736e+001, 2.414748e+000, -6.119335e+000, -3.659157e+000, 1.312726e+000, -2.464979e+000, 1.974681e+000, 2.277165e+000, -7.019881e-001, 2.447501e+000, -3.629378e+000, 4.266014e+000, -1.431432e+000, -1.310478e+000, -1.080445e+000, 1.095242e+000, 2.430444e+000, 2.939128e+000, 6.164448e-001, -1.366888e+000, 2.679258e+000},
{-2.526788e+000, -1.375988e-001, 2.823192e+000, 4.919473e+000, -2.846976e+000, -1.340418e+000, 2.164643e+000, 6.770143e+000, -1.220522e+000, -3.302722e+000, -6.605716e+000, 8.344361e-001, 1.223341e+001, -4.306439e+000, -3.966433e+000, -3.882579e+000, -1.107499e+001, -1.138441e+001, 1.542780e+001, -7.594926e-001, -1.433597e-001, -5.988582e+000, -5.528636e-001, 2.975553e-001, 2.246768e+001, 9.039337e+000, 5.001634e+000, -1.152708e+001, 1.575733e+001, -1.061464e+001, -5.624988e+000, 1.082716e+001, -9.674309e+000, 9.256833e+000, 4.782813e+000, -7.085658e+000, -6.336660e-001, -1.257280e+001, -8.057707e+000, 8.646864e+000, 1.253823e-001, -8.500800e+000, 7.733471e+000, 5.521462e+000, 1.108701e+000, -9.758083e+000, -1.922574e+000, -2.945017e+000, -8.714629e+000, 1.045377e+000, -5.226172e+000, 4.491244e+000, 2.569144e+000, -4.200153e-001, -1.316451e+000, 4.688076e+000, -2.350715e+000, -5.832993e+000, 3.370172e+000, -3.199828e+000, 5.134454e+000, -3.857933e+000, 5.520689e-001, -1.056743e-001, 4.074542e+000, 1.866540e+000, -1.050034e-001, -6.902825e-001, -2.245303e+000, -2.417288e+000, 3.278019e+000, -9.939794e-001, -3.394661e-001, -2.950428e+000, 2.292471e+000, 4.911619e+000, 7.184607e+000, 4.451708e-001, 3.656850e+000, 2.240606e+000, -5.992944e+000, 7.879377e-001, 7.829007e+000, 4.922550e+000, 4.326463e+000, -6.541506e-001, -3.619887e+000, 5.927955e+000, -1.061415e+001, -5.673128e+000, -7.322113e+000, 7.353973e+000, -3.835100e+000, -1.182723e+001, -3.354432e+000, -4.045392e+000, 8.993406e-001, -1.029939e+001, -8.838990e+000, 6.828556e+000, 2.706248e+001, 5.818500e+000, 4.544073e+001, 1.133450e+001, 7.187667e+000, -2.761077e+001, -9.695563e+000, -3.595384e+000, -1.861873e+001, 2.163979e+000, 3.814224e+000, 4.561584e+000, -4.112510e+000, 4.473797e+000, 8.165497e+000, 3.963551e+000, 2.324932e+000, 4.802204e+000, -2.592726e-002, -1.033314e+001, -1.125237e+000, 5.638214e+000, -6.599674e+000, -1.648500e+000, -2.316829e+000, 3.621430e+000, 5.260999e+000, 3.581971e+000, 1.204046e+000, 8.872935e+000, 2.414229e+000, 2.052443e+000, 5.779974e+000, 9.592577e-001, 6.605887e+000, 8.658279e+000, 8.563783e-001, -2.054954e+000, 5.756037e+000, 3.723653e+000, -7.585439e-001, 4.100251e-001, 4.316143e+000, 3.416897e+000, -2.327670e+000, -2.842343e+000, 4.427790e+000, 3.166370e+000, 3.772114e+000, -3.911980e+000},
{1.832763e+001, -1.995455e+000, -6.128766e-001, -1.144312e+000, -4.461927e+000, 3.734364e+000, 1.048236e-001, -2.910715e+000, 6.121842e-001, 1.307491e+001, 2.047910e+000, -6.131699e+000, -2.067744e+000, 2.722341e+000, 1.110245e+001, 8.813194e+000, -7.164135e+000, 6.774858e+000, -8.735887e+000, -4.985928e+000, -1.692375e+001, 2.508791e+001, 3.019271e+000, -1.402697e+001, 1.768337e+001, -5.286260e+000, -1.893381e+001, 1.396573e+001, 1.236610e+000, -3.849216e-001, 6.493975e-001, 3.099700e+000, 1.617161e+001, -1.245466e+001, 2.304851e+000, 5.116562e-001, -1.147324e+001, 8.858113e+000, -7.331950e+000, 8.295354e+000, 3.687826e-001, 1.037681e+001, -5.795030e+000, -7.107251e+000, -2.309610e-001, -5.536951e+000, 4.989183e+000, 8.177551e+000, -5.506219e+000, 2.494683e+000, 3.810246e+000, 3.908627e+000, -8.574395e+000, -3.883907e+000, -1.370448e+000, -1.209776e+001, -3.466397e+000, 2.388833e+000, 3.361446e-001, 2.237144e+000, 1.960222e+000, -1.011505e+001, -4.251228e+000, 5.412500e+000, 1.402771e+000, 4.665082e+000, -2.077803e+000, -1.712684e+000, -4.117125e-001, -9.006589e-001, -2.205688e+001, 1.804365e+000, -2.320930e+000, -1.120601e+000, 3.386717e+000, 5.928132e+000, -2.567914e+000, -9.264019e+000, 1.850848e+000, 2.436088e-001, 8.797813e+000,


© ISO/IEC 2004 — All rights reserved

Copyright International Organization for Standardization
Provided by IHS under license with ISO
No reproduction or networking permitted without license from IHS
Not for Resale

-1.253720e+001, -2.660951e+000, -9.624261e+000, 5.804252e+000, -1.020729e+001, 7.257340e+000, 8.614253e+000, -1.149785e+001, -2.426636e+000, 4.836388e+000, 3.812040e+000, 7.006265e-001, -1.610866e+001, 2.369989e+001, -1.518809e+001, -3.508818e+000, 1.808093e+000, -6.220185e-001, 2.767321e+001, -9.710200e-002, -1.220929e+000, -1.460447e+001, 2.332539e+000, 1.364455e+001, -1.384702e+001, -2.388397e+001, 1.043221e-001, -5.739286e+000, 5.332127e+000, 6.267943e+000, -1.757686e+000, 4.826534e+000, -9.945345e+000, -1.019784e+000, -6.748572e+000, -5.399403e+000, 1.018681e+001, -6.684780e+000, -1.519407e+000, 4.637133e+000, 3.187319e+000, -1.130027e+001, 1.008555e+001, 8.711576e-001, -2.012286e+000, -9.328693e-001, 5.880999e+000, -4.624916e-001, 3.637244e+000, -3.990084e+000, -1.192983e+000, 2.969685e+000, 3.495179e+000, -8.145986e+000, -3.467395e+000, -2.611597e+000, -2.767108e+000, -4.633847e+000, 8.261088e+000, 7.607857e+000, 1.410508e+001, -1.827832e+000, 3.822988e+000, 4.613354e+000, -3.905474e+000, 9.250556e-001, 1.774467e+000, 2.380227e+000, 5.491452e-001},

{-7.269161e+000, 3.626351e-001, 2.101331e+000, -2.484807e+000, -9.767691e-001, 7.286082e+000, 6.251096e+000, -7.926315e+000, 4.682916e+000, 1.449385e+000, 5.784879e+000, -1.235356e+000, 6.458243e+000, 9.396323e+000, -2.135394e+000, -5.376435e+000, 7.069057e+000, 9.600601e-001, 1.562081e+001, 6.067999e+000, 4.568716e+000, 3.455034e+000, 2.612843e+001, -3.098875e+000, 5.905982e-002, 1.888235e+000, 1.802105e+001, 1.476518e+001, -5.295933e+000, 7.695819e+000, 5.532392e+000, -1.260990e+000, 2.874301e+001, -1.054725e+001, -5.941164e-001, 6.481529e+000, 1.498941e+001, -4.664716e+000, -1.738488e+000, 2.322895e+000, -3.602267e+000, 6.583060e-001, 9.885372e+000, -4.672915e+000, -6.791434e+000, -2.364817e+000, -1.046844e+001, -1.400492e+000, -1.660496e+000, 1.568451e+000, 3.012854e+000, -2.202356e+000, 1.097384e+001, -1.488550e+001, 3.648385e+000, 9.027315e-001, -1.755128e+000, -3.444935e+000, -4.306158e+000, 7.218969e-001, -5.287423e+000, 2.931745e+000, -3.219998e+000, -8.058902e-001, 3.066030e+000, -9.560111e-001, -5.051456e+000, -2.020486e+000, 1.821427e+000, 3.400983e+000, 9.150183e+000, 2.295229e+000, 3.132411e+000, -1.247940e+000, -1.774319e+000, -2.644293e+000, -3.760697e+000, -5.832654e+000, 5.021482e+000, 3.869066e+000, 9.287073e+000, -9.126244e-001, -8.167191e+000, 2.311906e+000, 8.352508e+000, -4.979918e+000, -4.888991e+000, -2.844568e-001, 5.581705e+000, -8.528040e+000, -2.491800e+000, 4.963047e+000, 1.074815e+001, 1.775083e+001, 1.680548e+001, 2.591057e+000, 9.628316e+000, -5.446022e+000, 3.931165e+000, -4.367344e+000, 2.610057e+001, 1.714626e+001, -1.456989e+001, 2.302890e+000, 4.541431e+000, -1.309697e+001, 1.193630e+001, 6.286455e+000, -5.997643e+000, -4.238325e+000, 1.368122e+000, -7.785982e+000, 1.105943e+001, -2.458941e+000, -1.814415e+001, -1.640861e+001, -4.712615e+000, -3.240952e+000, -1.655395e+000, -1.011039e+001, -1.677766e+000, -1.398519e+001, 1.249294e+001, -1.926000e+001, 9.356599e-001, -2.039296e+000, 7.804448e+000, 3.534114e+000, -8.333191e+000, 4.499947e-001, 1.180519e+000, 5.824181e+000, 4.840206e+000, -4.504845e+000, -1.145699e+001, 6.802128e+000, 6.812209e+000, -3.696503e+000, -2.662899e+000, -4.209560e+000, -2.119471e+000, 2.253408e+000, -1.634746e+000, -1.833961e+000, 8.697235e+000, 3.039307e+000, 5.657867e+000, -5.641604e+000, -3.631131e+000, 1.201583e+000},

{7.099591e+000, 2.576450e+000, 4.295154e+000, 4.244186e+000, -6.006494e+000, -4.766671e+000, 1.690379e-003, 1.610768e-001, 5.082367e+000, -3.926322e+000, -7.136540e+000, 6.882147e+000, -1.845243e-001, 3.424297e+000, -1.035787e+001, 1.598861e+001, -5.672212e+000, -7.500486e+000, 1.522299e+001, 5.897520e-001, 1.159435e+001, -1.575696e+001, 7.203099e+000, -1.139163e+001, 7.276787e+000, -5.459339e+000, 1.967890e+001, 9.598027e+000, -1.790509e+001, -7.955571e+000, -1.884085e-001, 3.026857e+001, -8.651755e+000, 8.672495e+000, 1.133537e-001, 1.278087e+000, -4.153200e+000, 1.846859e+000, -2.650573e-001, 8.317530e+000, 3.614141e-001, 1.229065e+001, -2.586293e+000, -1.720128e+000, -6.802434e+000, 3.396535e+000, 2.512263e+000, -5.249045e+000, 2.299169e+000, -5.172768e+000, -8.144896e-001, -1.599217e+000, 2.072170e+000, -3.803803e+000, 4.249967e+000, -9.900825e+000, -3.817589e+000, -5.166333e-001, -7.407239e+000, -2.239762e+000, -6.820752e-001, 9.247219e-001, -3.909447e+000, 1.469001e+000, -2.048831e+000, 8.967857e-001, -2.332027e+000, 4.430710e+000, 1.646390e+000, 1.718831e+000, -8.811251e+000, -2.300118e+000, 9.458131e-001, -4.569056e+000, 3.148456e+000, 2.210872e+000, 3.367740e+000, -5.327409e+000, -4.870183e+000, 3.651005e+000, -8.888483e+000, 9.596345e-001, -2.011549e+000, 5.690649e-002, -3.390572e+000, 1.468248e+001, -1.085307e+001, -6.041056e+000, 1.176907e+001, -2.173500e+001, 4.625643e+000, -2.974201e+000, -5.706572e-001, -1.457770e+000, -8.411911e+000, -2.526340e+001, 4.277024e+000, 1.300256e+001, 9.419886e+000, 3.169321e+000, -8.153941e+000, 1.413412e+001, -8.952142e+000, -1.726455e+001, 3.041786e+000, 1.019425e+001, -1.587358e+001, 4.142175e+000, 5.714109e+000, 2.044374e+001, -1.878378e+000, -5.650275e+000, -1.399758e+001, -1.626032e+001, -7.277928e+000, -2.739134e-001, 1.876523e+001, -4.663320e+000, 1.037850e+000, 9.386989e+000, -4.671516e+000, 9.966093e+000, -6.439848e+000, 9.008973e+000, 2.929310e+000, -3.277609e+000,

© ISO/IEC 2004 — All rights reserved


Copyright International Organization for Standardization
Provided by IHS under license with ISO
No reproduction or networking permitted without license from IHS
Not for Resale

1.181048e+001, -3.866086e+000, -8.963634e+000, 9.570793e-001, 4.288382e+000, 9.298357e-001, 5.656172e+000, 6.409794e+000, -8.013511e+000, 1.005156e+001, 9.606916e+000, 1.221257e+000, -1.767065e+000, 5.566577e+000, -1.973529e+000, -4.446361e+000, 4.611345e+000, 5.890352e-002, 1.115240e+000, 1.708985e+000, -2.202874e+000, 6.275647e+000, 2.775093e+000, -4.691415e+000},
{2.508490e+000, -2.026960e+000, 4.026499e+000, -3.435406e+000, 2.936409e+000, -7.199626e+000, 5.800587e+000, -1.152976e+001, -6.703201e+000, 3.568913e+000, 2.517804e+000, 9.312943e-001, 1.203224e+001, 8.453552e+000, 3.686365e-001, -9.104373e+000, -1.768496e+001, -1.443683e+001, 1.108756e+000, 3.033751e+000, -8.053770e+000, -1.618746e+001, -1.854705e+000, -2.662987e+001, -8.237283e+000, 3.591630e+001, -1.272540e+001, 1.586093e+001, 1.787548e+001, -1.227336e+000, -5.792317e+000, 3.687431e+000, -2.237261e+000, 4.548454e+000, 4.501852e+000, 5.446934e+000, 1.960737e+000, 5.738771e+000, -1.662558e+001, -1.408230e-001, -5.153266e+000, 2.966356e+000, 1.015239e+001, -7.451795e+000, 8.021447e+000, 8.720421e+000, 1.354106e+000, -3.367211e+000, 4.690983e-001, -1.495469e+001, 2.415814e+000, 1.851328e+000, -1.952128e+000, 1.568490e+000, -4.568510e+000, 4.583741e+000, -1.163736e+000, 2.750844e-001, 2.830841e+000, -2.213304e+000, -4.582336e+000, 5.978199e+000, -2.591879e+000, 2.314132e+000, 2.100881e+000, -1.527647e+000, -2.290135e+000, -1.196210e+000, 3.329659e+000, -8.008548e-001, -3.309321e+000, 1.013417e+000, 6.389592e+000, 2.040278e+000, 5.462201e+000, -5.254779e+000, 2.424559e-001, -3.445273e+000, 3.569772e+000, -4.422632e+000, 3.821320e+000, 1.254330e+001, -9.721816e+000, 6.685241e-001, 1.162948e+001, -9.357783e-001, -3.071792e+000, -8.068908e-001, -8.183735e+000, 1.640631e+001, 1.380565e+001, -3.546705e+000, 1.498019e+001, 9.161016e+000, 3.345231e+000, 2.059451e+000, 6.195204e-001, 7.451167e+000, 6.347311e+000, 5.597634e+000, -4.539773e+000, -2.071108e+001, 8.859194e+000, 1.733703e+000, -4.282910e+000, 1.053790e+001, 1.119318e+001, 5.454586e+000, 1.419164e+001, 1.328049e+001, 1.342148e+001, 4.789769e+000, -7.147393e+000, 7.587985e-001, -1.064275e+001, -1.591797e+001, 3.231421e+000, 2.524720e+000, -3.720156e+000, -8.279687e+000, -4.703748e+000, -7.265709e+000, -2.199884e+001, -2.866652e+000, 7.888643e+000, 2.931296e+000, -5.338968e+000, -2.372581e+000, -3.647866e+000, -3.427551e+000, 1.225453e+001, 3.026343e+000, 4.354551e+000, 6.062708e+000, 4.465424e+000, 5.057935e-001, -1.436093e+000, -1.377560e+001, -7.070375e-001, -2.652860e+000, -1.331971e+000, 4.103543e+000, 6.335041e+000, -1.075790e+000, 3.185624e+000, 6.973162e+000, 1.474874e+000, -1.530457e+000, -4.196268e+000, 2.615827e+000},
{3.720961e-001, -4.626065e+000, -9.106298e-001, 1.706807e+000, 6.082246e-001, 2.891672e+000, -3.757352e+000, -1.531214e+000, 2.289185e+000, -1.120824e+001, -3.045424e+000, -3.669597e+000, 3.146434e+000, 7.885957e-001, 5.026963e-001, 5.246799e+000, 8.817778e+000, 2.595204e+000, 1.178463e+000, -2.698109e+000, -4.687428e+000, -9.469614e+000, 1.259259e+001, -1.177419e+001, 4.370415e-001, 7.264497e+000, -2.597558e+000, 4.578433e+000, 1.087167e+001, -1.845969e+000, -2.994872e+000, -2.144609e+000, 2.752065e+000, 1.973594e+001, 8.563219e+000, -4.181787e+000, 2.073279e+001, -3.054601e+000, -9.162780e-001, -8.501506e+000, 2.980226e+000, -2.601972e+000, -3.435126e+000, 8.000081e-001, -1.356954e+000, -5.119588e-001, 5.271511e+000, 1.284520e+001, -1.518650e+001, 4.952356e+000, -2.639978e+000, -5.081874e+000, -6.150104e-001, -4.105506e+000, 8.392998e+000, -3.965505e+000, 7.794754e+000, 6.498592e+000, 3.198397e+000, -5.250364e+000, 2.651886e-001, -6.702368e-002, -4.414501e+000, -4.349740e-001, -4.161702e-001, 2.486987e+000, 1.739136e+000, 1.530781e+000, -5.644660e+000, -5.193180e-001, -4.206647e-001, 3.651094e+000, -1.002249e+000, -4.567092e-001, 2.434308e-001, -1.636981e+000, -3.319029e-001, 7.680526e-001, -5.225150e+000, 3.679537e+000, -3.874212e+000, -2.015638e-001, -7.088986e-001, -5.548050e+000, 1.119414e+000, 1.140842e+001, -2.454634e+000, 1.505879e+001, -1.379739e+001, -5.096116e+000, -1.609325e+000, 1.656744e+001, -1.767278e+001, 2.451117e+001, -1.038149e+001, 7.511064e-001, 1.196236e+001, -1.403817e+001, -1.246950e+001, -7.595849e+000, -1.971107e+001, -4.721351e+000, -7.430349e+000, -6.170886e-001, 3.440387e+001, -1.395307e+001, 1.120094e+001, 7.350479e+000, 7.235324e+000, -1.036414e+000, 1.015231e+001, -2.514561e+001, 1.137356e+001, -1.391379e+001, 4.630812e+000, 1.050266e+001, 2.106345e+001, 6.394795e+000, 1.039411e+001, 7.903597e+000, 5.156291e+000, 6.939599e+000, -1.358328e+000, -2.952814e+000, 4.399631e-001, 1.799301e+000, -5.534247e+000, -4.271397e+000, -2.176155e-001, -9.205943e+000, 8.879201e+000, 4.180992e+000, 3.889785e+000, -8.293683e+000, 8.565213e+000, -1.281624e-002, 1.708316e+000, -5.942798e+000, 1.918721e+000, 4.020081e+000, 5.568755e+000, 2.455198e+000, 1.238243e+000, -1.967774e+000, 2.714976e+000, -1.754257e+000, 9.656419e+000, -8.615706e-001, -6.835538e+000, -2.572156e+000},
{3.914195e+000, -4.218863e+000, -3.591166e-001, -6.518120e-001, 2.363960e+000, 4.053266e+000, -2.600529e-001, -1.811542e+000, 3.075510e+000, 2.661596e+000, 3.169727e+000, 1.392381e+001, -5.657741e+000, -5.571329e+000, 1.559309e-001, 1.056799e+001, -1.091436e+001, -6.433805e+000, -1.621015e+001, -3.606246e+000, 4.182568e+000, -6.568637e+000, -


© ISO/IEC 2004 — All rights reserved

Copyright International Organization for Standardization
Provided by IHS under license with ISO
No reproduction or networking permitted without license from IHS
Not for Resale

1.330451e+001, -1.200926e+001, 4.014965e+000, 1.586450e+001, 1.352412e+001, -3.159775e+000, -8.379033e+000, 8.293483e+000, 1.061028e+001, -9.267228e+000, 6.836986e+000, 1.183714e+001, -1.270534e+001, 1.353356e+001, 6.962189e+000, 3.298961e+000, 1.744870e+001, 7.669363e+000, 1.075442e+001, 5.137802e+000, 3.257721e+000, 9.274314e+000, -4.934438e+000, 6.025799e+000, 1.331856e+001, 8.589833e+000, -4.687758e+000, 6.821264e+000, 3.312605e+000, 4.765182e+000, -3.496110e+000, 5.587164e+000, 1.336040e+000, 3.225564e+000, -5.665240e+000, -3.576431e+000, 2.396632e+000, 4.404530e+000, 2.800315e-001, -2.505086e+000, 3.295437e-001, 7.772029e+000, 3.071303e+000, -3.856037e+000, 4.640958e+000, -2.435787e+000, -2.795489e+000, 2.477100e+000, -5.370194e+000, 5.005623e+000, -1.905072e-001, -3.662268e+000, 1.209115e-001, -3.911017e-001, -3.507868e+000, 2.863303e+000, -1.564328e+000, 4.224377e+000, 3.001609e-001, 3.279173e+000, 2.592906e-001, -6.261228e+000, -1.812742e-001, -3.047258e+000, -1.375803e+001, 4.122722e+000, -7.644929e+000, 9.711250e+000, -2.051231e+001, -3.632053e+000, -5.320418e+000, -1.468422e+001, -2.660697e+000, -9.984607e-001, -3.834550e-001, 5.855703e+000, 5.565767e+000, 1.679199e+001, -1.043277e+001, 1.844348e+001, -5.988595e+000, 2.048585e+001, 2.053628e+000, -2.131857e+001, 1.044513e+001, -1.184103e+001, 1.133299e+001, 2.183745e+000, 1.049249e+001, 1.309002e+001, -1.483757e+001, 1.111758e+001, -6.853491e-001, 2.387960e+000, 1.139813e+001, 4.551979e+000, 7.090490e+000, 5.936947e+000, 2.426910e-001, -1.924513e+001, 6.901559e+000, -1.106527e+001, -2.068379e+001, -1.422867e+001, 4.221259e+000, -6.103504e+000, -2.720912e+000, -6.936086e+000, 5.772986e+000, 1.173710e+000, -7.236149e-001, -1.740921e+000, 2.323607e+000, 1.997420e+000, 7.681529e+000, -1.005839e+000, 1.595666e+000, -5.163298e+000, 2.759176e+000, -8.146483e+000, 1.773771e+000, -5.612408e+000, -4.685735e+000, -1.008508e+000, 6.357211e-001, 2.908739e+000, 5.636622e+000, 5.111004e+000},
{-1.346254e-001, -6.829982e+000, -5.120448e+000, 2.284441e+000, -3.336716e+000, 4.375736e+000, 1.020097e+001, 1.262078e+000, 7.097332e+000, 9.027993e+000, 1.277692e+001, -5.904513e+000, -3.084407e+000, 9.577427e+000, -6.835159e+000, -2.752335e+000, -9.583167e-001, 5.641925e+000, -4.464825e+000, -3.079963e+000, 7.745126e+000, -1.235499e+000, 2.654330e+000, 4.925392e+000, 1.506863e+000, 6.198765e+000, -1.428430e+001, 1.515276e+001, -1.391834e+001, 1.349531e+001, 6.209035e+000, 2.556400e+001, -2.460024e+001, -4.896508e-001, 4.288410e+000, -9.466247e+000, 2.724916e+000, 6.442875e+000, 1.833929e+000, 5.607684e-001, 6.728446e+000, 6.648427e+000, 5.649572e+000, 7.471084e+000, -1.131849e+000, 4.835436e+000, -2.469117e+000, -3.660262e+000, 1.174969e+000, 1.121169e+000, -1.061476e+001, 1.270643e+001, 4.750166e+000, 6.890529e+000, 3.273329e+000, 8.560867e-001, -4.895273e-001, 1.479533e+001, -1.979823e+000, 1.534855e+000, -6.435944e-001, -5.561082e+000, -4.447108e+000, 5.414777e+000, 2.844684e+000, -1.525866e+000, -2.747335e+000, 5.034807e+000, -5.615060e-001, 3.825785e+000, 1.624624e-001, 9.278178e+000, -6.327387e+000, -1.109063e+000, -7.119904e-001, 3.590804e+000, 4.462592e+000, -3.272028e+000, 6.609096e+000, 3.996041e-001, 5.741181e+000, -6.065460e+000, -1.967956e+000, 1.176215e+001, -3.213455e+000, -7.205740e+000, 2.747678e+000, 5.046411e+000, 8.872358e-001, 5.213884e+000, -4.914119e+000, -5.743085e+000, -6.771537e+000, 2.669088e+000, 6.246058e+000, 2.645027e+000, 1.962687e+000, -1.698317e+001, -2.619217e+001, -6.554005e+000, 1.217603e+000, 1.349501e+001, -1.309789e+001, 1.247866e+001, -2.216728e+001, -1.372247e+001, 2.540871e+001, 1.589775e+001, -1.221662e+001, 2.821941e+001, -1.127742e+001, -3.375872e+000, 4.749563e+000, -1.415115e+000, 9.580968e+000, 2.535126e+000, -8.419503e-001, 7.370742e+000, 3.589117e+000, 3.090041e+000, -9.325515e+000, 1.120366e+001, -2.892620e+000, 1.215638e+000, 1.033699e+001, -5.268586e+000, -3.247411e+000, 3.292189e-001, -8.864304e+000, -2.560340e+000, -3.409269e+000, -4.278151e+000, -3.675653e+000, 2.272559e+001, 2.087891e+000, 7.906490e-001, 4.368900e-001, -4.022561e+000, -2.103932e+000, 2.797952e+000, 8.192393e-001, -3.711788e+000, 4.428087e+000, -4.559422e+000, -5.184010e+000, -6.179515e-001, 1.026074e+000, 3.138096e+000, 5.238737e+000, 3.016056e+000},
{1.713314e+000, -1.744043e+000, 5.904217e-001, 6.414630e+000, -6.816500e-001, -1.195817e+000, -1.703108e+000, -1.015253e+001, -1.336697e+001, 2.135918e+000, -4.595572e+000, 5.939014e+000, 1.058789e+001, -1.725875e+001, 1.451736e+000, -5.934201e+000, -1.178143e+001, 2.543254e+000, -1.165236e+001, 1.609367e+001, 2.462895e+000, 6.919105e+000, -1.218420e+000, -1.396921e+001, -9.605072e+000, -5.221904e+000, 9.763756e+000, 1.892484e+000, 2.168634e+001, 6.936597e+000, 3.517215e+000, -3.326987e-001, -7.649796e+000, 3.855272e-001, -7.059674e+000, -2.494829e+001, 1.386054e+001, -1.064521e+001, 7.338949e+000, -4.249128e+000, -6.751077e+000, -7.264527e+000, -2.165755e+000, -5.666422e+000, -1.373058e+001, 9.873740e+000, -2.853011e+000, 3.586497e+000, -3.993597e+000, -3.311248e+000, -3.818051e+000, 7.147584e+000, -1.181935e+000, 3.651174e-001, -6.023252e+000, -1.520865e+000, 1.791462e+000, -3.860793e+000, -3.908891e+000, 8.544039e+000, 7.532810e+000, 2.336992e+000, 4.877770e+000, -1.531464e+000, 2.017092e+000, -2.596072e+000, 1.645464e+000, 1.690057e+000, 5.510941e-001, -2.318964e+000, -1.776254e+000, 7.006109e-001, -3.147466e+000, -6.375138e+000, 6.928792e+000, -1.828562e+000, -1.269353e+000, 1.019048e+000, 1.616836e+000, -9.405270e-001,

© ISO/IEC 2004 — All rights reserved


Copyright International Organization for Standardization
Provided by IHS under license with ISO
No reproduction or networking permitted without license from IHS
Not for Resale

2.280160e+000, 6.621316e+000, 4.168369e+000, -1.798483e+001, 8.344652e+000, -2.320128e+000, 4.421986e+000, 1.651344e+000, -2.400783e+000, 1.046307e+001, 1.057458e+001, -4.445701e+000, 1.040903e+000, -6.009022e+000, 2.080284e+000, 4.430294e+000, -9.512783e+000, -1.196054e+001, 5.624091e+000, 1.561844e+001, 1.225963e+001, -4.292581e+000, -1.510709e+001, -1.413049e+001, -2.658894e+001, -3.730414e-001, 8.700890e-001, 2.792396e+000, -2.522305e+001, 1.185812e+001, 2.682677e-001, -1.266616e+001, -1.850785e+000, 4.599324e+000, 5.568278e+000, 1.513099e+001, 1.271589e+001, -1.676286e+001, 7.979747e+000, 6.528831e+000, 7.050401e+000, 4.542613e+000, -9.511910e-001, -5.170610e+000, -1.489296e+000, -2.869698e-001, 1.100372e+001, -2.979397e+000, 1.058278e+001, -1.035366e+001, -3.262350e+000, -1.421393e-001, 8.570207e+000, -2.867139e+000, 1.224730e+001, -1.735984e+000, -1.387097e+000, -5.039904e-001, 8.158739e+000, -4.432986e-001, -3.198467e+000, 7.940843e-001, -4.322687e+000, 6.524934e+000, 8.444038e+000, -1.160606e+000, 1.077390e+000, 2.232146e+000, -2.102009e+000, -7.497424e-002},

{2.707546e-001, -1.662705e+000, 8.035741e+000, -5.304349e+000, -1.116742e+001, 1.144764e+001, 2.545926e+000, -7.410043e+000, 7.307905e+000, -1.072979e+001, -7.232705e+000, -2.903278e+000, 3.236630e+000, 2.691460e+000, 3.111966e+000, 9.682765e+000, -1.067816e+000, 1.595586e+000, -4.404305e-001, -1.036862e+001, 5.745462e+000, -5.799971e+000, -8.886479e+000, -8.137562e-002, -8.485473e+000, -1.798786e+001, 1.175471e+001, 9.249851e+000, 1.694469e+001, 5.948669e+000, -1.199790e+001, -1.517722e+001, -5.483253e+000, 5.977536e+000, 6.570406e+000, 1.353700e+001, 8.579282e+000, 3.005136e+000, -9.608616e+000, 8.637470e+000, 2.539178e+000, 4.078559e+000, 5.238305e+000, -9.205366e-001, -4.903209e+000, 5.151245e-001, 5.610304e+000, -2.337723e+000, 4.902973e+000, 4.290573e+000, 4.834322e+000, 6.140155e+000, -5.351405e+000, -4.094862e+000, 5.706281e+000, 4.397469e-001, -9.422634e+000, -5.853849e-001, 3.656280e+000, -5.993085e+000, 5.233214e+000, -3.272996e+000, 4.086044e-001, -2.780322e+000, -1.118533e+001, 4.146897e+000, 8.975172e-001, 1.142135e+000, -4.247618e+000, -2.983514e+000, -1.097020e-001, 3.531301e+000, 7.675118e+000, 1.277978e+000, 2.448029e-001, 1.114435e+001, -1.549462e+000, -1.603492e+001, -8.132837e+000, 5.480936e+000, 2.231303e+000, -1.217582e+001, -1.918799e+000, -3.878814e+000, 3.424767e+000, 1.201205e+001, 3.127897e+000, -7.920259e+000, 1.436152e+000, -3.872112e+000, 1.665671e+000, 4.649618e+000, -6.910201e+000, -1.044128e+001, -4.507440e+000, -4.319245e+000, 1.000318e+001, 4.737995e+000, -5.681059e+000, -1.921409e+000, 5.193688e+000, -1.430517e+001, 8.647612e-001, -2.009434e+001, -1.434201e+000, -1.284402e+001, 2.574615e+001, -4.510632e+000, 9.138482e+000, -1.961130e-001, -4.662108e-001, 3.048151e+001, 1.503848e+001, 2.713546e+001, 3.509671e+000, 1.590247e+000, 1.112498e+001, -2.990855e+000, -2.064061e+000, 7.818849e+000, 2.557590e+000, 2.063301e+001, 1.278861e+000, -1.093347e+000, -4.786982e+000, 1.799381e+000, -5.282362e+000, 9.130505e+000, -9.976221e+000, -4.865712e+000, -4.747738e+000, -7.937272e+000, -1.644977e+000, 7.527470e+000, -2.081484e+000, 3.170859e+000, 6.313948e-002, 3.064025e+000, 5.369951e-001, 1.035852e+001, 1.296696e+001, 7.821894e+000, 3.678309e+000, -2.434441e-001, 3.185120e+000, -1.419384e+000, -5.083424e+000, 8.195889e+000, -1.737480e+000, -6.187894e+000},

{5.423059e+000, -6.526556e-001, 7.479677e+000, 1.610303e+000, -5.581536e+000, 1.421480e+000, -1.084832e+001, -4.693326e+000, -8.185792e+000, 3.608966e+000, 8.517857e+000, -2.441259e+000, -2.038705e+000, 8.873031e-001, 4.553923e+000, 1.111670e+001, -5.846233e+000, 2.922706e+000, -1.285371e+001, 1.453445e+001, 1.503614e+001, 5.528200e+000, 1.130539e+000, -5.109683e+000, -7.406099e+000, -3.112993e+000, 1.682976e+001, -1.168988e+001, -9.795278e-001, 1.274950e+001, 3.631105e-001, -6.348262e+000, 1.268238e+001, -1.361893e+001, 1.183939e+001, -1.387987e+001, -3.468155e-001, 2.203293e+000, -7.910333e+000, 1.172167e+001, 3.642656e+000, 3.756754e+000, 1.534906e+001, -4.933493e-002, 5.625827e+000, 1.307834e+001, 1.059018e+001, -4.020149e+000, -5.772205e+000, 1.186446e+001, -5.208898e+000, -1.537593e+000, -1.139572e-001, 5.916315e+000, 1.302176e+000, 1.171754e+001, -2.910482e+000, 7.279197e-001, -6.466586e+000, -7.183199e-001, 2.695689e+000, -8.170829e-002, -1.503107e+000, 9.889174e+000, -6.878782e+000, -3.328721e+000, -3.233205e+000, 3.337640e+000, 3.128791e+000, -4.594537e+000, -6.527756e+000, -2.311913e-001, 4.330345e+000, -3.172234e+000, 6.874519e+000, 8.750923e+000, -2.780781e+000, -7.027400e-001, 1.689857e+000, 3.756904e+000, 2.686906e+000, -6.853859e-001, -8.039607e+000, -1.865287e+001, 2.160026e+000, 3.059770e+000, -9.809892e+000, -4.497113e+000, -6.533630e+000, 1.062785e+000, -3.591812e+000, 1.948497e+001, -8.898804e-002, -1.448676e+000, 3.724791e+000, -1.864234e+001, 4.734251e+000, 9.729772e+000, -1.641945e+001, -3.056366e-001, -3.379367e+001, 3.543961e-001, 3.065378e+001, 8.602067e+000, -2.437070e+001, 5.058511e+000, -1.193524e+001, -5.720876e+000, -1.266752e+000, -8.892120e+000, 6.889411e+000, 1.690804e+000, -1.047854e+000, -1.897617e+001, -7.998853e+000, -5.576185e+000, -1.310672e+001, -2.219724e+001, -8.881770e+000, -1.280179e+001, -1.105860e+001, 9.540235e+000, -1.727194e+000, -1.460419e+001, -1.500705e+000, -1.109096e+001, -9.766919e-001, -


© ISO/IEC 2004 — All rights reserved

Copyright International Organization for Standardization
Provided by IHS under license with ISO
No reproduction or networking permitted without license from IHS
Not for Resale

3.328012e+000, -1.780239e+000, -7.147809e+000, -9.889107e-001, 5.014913e+000, 8.298817e+000, -5.038864e-001, -1.842763e+000, 4.273190e+000, 2.728662e+000, 9.846113e-001, 1.291298e+000, 2.036157e-001, 5.333527e+000, 1.698512e+000, 5.476129e+000, 3.097147e+000, 7.746920e+000, 6.790112e+000, 6.074059e+000, 1.187454e+001, -9.824461e+000, 2.147149e+000},
{1.460913e+000, -3.413874e+000, 1.961813e+000, 8.324429e-001, 2.117860e+000, -2.364697e+000, 1.826436e+000, -5.788569e+000, 2.009361e+000, -1.855409e+000, 1.909423e+000, -1.187283e+001, 5.673895e-001, -1.487542e+001, -2.813421e-001, -1.140016e+001, -5.860596e+000, 2.999267e+000, -9.576675e+000, -4.613992e+000, -1.451035e+001, 4.710416e+000, 2.425698e+000, 2.178332e+001, 2.243242e+001, 5.483454e+000, 5.789186e+000, 1.697652e+001, -5.036979e+000, -1.214538e+001, -5.745325e+000, -2.635822e-001, 1.721089e+001, 1.226085e+001, 2.463766e+000, -9.043726e-001, 1.326589e+001, 4.833896e+000, 2.874718e+000, 1.472470e+001, 4.883799e+000, 2.977427e+000, 1.042279e+001, -2.816831e+000, -6.034054e+000, 4.838416e+000, 2.042941e+000, -3.088964e+000, 8.681645e+000, 4.642812e-001, -9.531092e+000, -1.369135e+000, -2.636784e+000, 3.667868e+000, -9.428274e-001, -1.149485e+001, 4.456342e+000, 1.751723e+000, 5.447251e+000, -5.251009e-001, -3.071404e+000, 1.881221e+000, -5.735475e+000, 1.453237e-001, -6.820070e+000, -3.223656e+000, -4.992028e+000, 2.542361e+000, -2.325891e-001, -8.592940e+000, -1.638160e+000, 2.419893e+000, -2.652163e-001, -3.567597e+000, 2.050185e+000, -3.880937e-001, -1.461643e+000, 1.103873e+000, -4.430011e+000, -5.650161e+000, 8.071842e+000, 6.574669e+000, 1.937317e+000, -1.464853e+000, 1.895280e+000, 8.034919e-001, 2.013430e+001, 1.317000e+001, 1.177887e+000, 2.750372e+001, -1.263100e+000, -1.603032e+000, 1.502007e+001, 9.024821e+000, -1.688235e+001, -2.165747e+000, -9.137358e-001, -9.086657e+000, 4.504502e+000, -1.806554e+001, -1.046060e+001, -4.967148e-001, 8.154884e+000, -1.976174e+001, -1.244834e+001, -1.314290e+001, -9.499392e+000, -3.027048e+001, 1.058207e+000, 1.781458e+001, 6.243989e+000, -1.509843e+001, 2.902209e+000, 8.492742e-001, -9.901269e+000, -1.183136e+001, 3.972778e+000, 5.644333e+000, -9.149962e+000, -3.718903e+000, 7.578928e+000, -5.262203e+000, 3.373360e+000, -3.225796e+000, -1.090283e+001, -3.757391e+000, 5.829898e+000, 3.717323e+000, -1.525920e+001, 7.564069e+000, 6.007313e+000, -1.583321e+001, -7.944628e+000, 4.344833e+000, 2.309377e+000, 4.137084e+000, -1.866453e+000, 2.160829e+000, 1.004799e+001, 1.293618e+001, -3.733414e-001, 4.834963e+000, -5.786840e+000, 4.095951e+000, 4.757162e+000, 2.774728e+000, 4.971741e+000, 6.054705e+000, -5.102146e-001, 8.454996e+000},
{3.738418e+000, -1.072595e+001, -1.471603e+000, 3.625007e-002, 2.764386e+000, -5.793315e-001, 4.307662e+000, -2.926005e+000, 2.499652e+000, 7.930052e+000, 8.496726e-001, 3.173188e+000, 5.916582e-001, -8.002145e+000, -3.644950e+000, -2.768839e-001, 1.474730e+001, -7.836756e+000, 4.329927e+000, 1.140027e+001, 2.099257e+000, 1.353020e+000, -1.068821e+000, 1.417859e+001, -1.986188e+000, -4.783961e+000, 1.001685e+001, -3.888148e+000, 1.314032e+001, -1.034833e+001, -1.384949e+001, 3.054105e-001, -8.805079e+000, -1.893407e+001, -6.908988e+000, -4.787059e+000, -1.677195e+000, 3.726630e-001, -5.864364e+000, -3.091482e+000, 1.079615e+001, 8.211759e-002, -9.889470e+000, -7.521460e+000, 8.218751e+000, -6.739562e+000, 6.663722e+000, -7.634741e+000, 9.846824e+000, 1.080071e+000, 7.292661e+000, 1.327158e+000, 1.092815e+000, -4.821994e+000, 1.554114e+000, 2.413608e+000, -3.777858e+000, -4.384647e+000, -2.886690e+000, -4.334097e+000, -3.561829e+000, -1.767261e+000, -1.476582e+000, -8.820666e+000, 1.966371e+000, -5.755477e-001, -9.086798e+000, -6.705901e+000, 1.130917e+000, -9.841829e-001, -5.298117e+000, 9.194693e+000, 2.737268e-001, -2.096520e+000, 5.113252e+000, -3.777965e+000, 9.013199e-001, 4.368682e+000, 5.106617e-001, -1.038116e-001, 4.013143e+000, 1.013021e+001, 1.211134e+000, 5.420353e+000, 1.020534e+001, 3.255194e+000, 3.163330e+000, 8.207051e+000, 4.471960e+000, 7.519683e+000, 3.079825e+000, -6.877618e+000, -6.764385e+000, 1.910213e+001, 1.136589e+001, 9.339689e+000, -4.094194e+000, 1.079734e+001, -5.447730e+000, 1.767061e+001, -1.804957e+001, -3.520027e+000, 6.471320e+000, -4.889421e+000, 1.060494e+001, -3.346741e+001, 1.389278e+001, 1.229350e+001, 1.186057e+001, 2.147836e+001, -3.310369e+001, -1.527533e+001, -1.686680e+001, 1.095472e+001, -1.724141e+001, -5.945572e+000, -1.754436e+001, -7.667138e+000, 4.867528e+000, -1.739840e+000, 1.229723e+001, -6.853199e+000, -2.236760e+000, -9.752337e-001, 1.359911e+000, 6.453241e+000, 4.450768e+000, -8.848166e+000, 1.873762e+000, 1.382407e+001, 2.618176e+000, -7.229831e+000, -2.822495e+000, -8.216290e+000, -9.354086e+000, -9.512713e+000, 2.674443e+000, -8.118622e-001, -2.637510e+000, -1.878560e+000, -4.130883e+000, 1.737460e+000, 2.403830e+000, 6.919530e-001, -6.544836e+000, -4.933275e+000, -2.202842e+000, -1.156059e+000, 3.173337e+000, -2.870209e+000},
{-1.075921e+001, 1.468614e+000, 4.770483e+000, 7.139585e-001, 3.250700e+000, 5.588279e+000, -1.272517e+001, -2.157130e+000, 1.188472e+000, -5.315431e+000, 2.370363e+000, -6.373963e+000, -7.209883e+000, 1.872112e-001, -8.901067e+000, -3.769231e+000, -1.200753e+001, -6.142124e+000, 2.041218e+000, 7.478060e+000, 8.982785e+000,

© ISO/IEC 2004 — All rights reserved


Copyright International Organization for Standardization
Provided by IHS under license with ISO
No reproduction or networking permitted without license from IHS
Not for Resale

1.052396e+000, -1.469018e+001, 2.414370e+000, 1.642003e+001, 2.386459e+000, 7.488807e+000, -5.411691e+000, -1.023491e+000, -2.063477e+001, 5.345283e-001, -2.357896e+000, -2.281159e+000, -2.421259e+000, -1.849168e+001, 4.678543e+000, -1.386014e+001, -5.830616e+000, -1.471962e+001, -5.787897e+000, -1.019934e+001, -5.172546e+000, 8.868054e+000, 4.331276e-001, -9.689614e+000, 6.893275e+000, -7.324532e+000, 9.593994e+000, -1.976089e+000, -5.103748e-001, -4.308386e+000, 4.666489e+000, -3.171621e+000, 1.165840e+000, -1.799854e+000, 4.476540e+000, 9.198960e+000, 6.971385e+000, 4.232239e+000, -2.742083e+000, -2.672968e+000, -7.584677e-001, 2.916931e-001, 6.067065e+000, 6.720276e+000, -7.631016e+000, 4.878422e+000, -2.655655e+000, -3.399021e+000, 7.393145e+000, 1.349544e+001, -1.780824e+000, 4.163875e+000, -9.076610e-001, -3.756516e+000, 3.193310e+000, -2.181163e+000, 6.388182e+000, 2.033391e+000, -2.658650e+000, 3.002530e+000, -4.122938e+000, -3.011854e+000, -1.404239e+000, -8.306164e+000, 2.025336e+001, -1.516640e+001, 8.371037e+000, -1.686440e+000, 7.248711e+000, 1.014722e+000, -1.588677e-001, -6.814893e+000, -1.405468e+001, 1.712752e+001, -1.078980e+001, 6.640613e+000, -9.956788e+000, -8.210911e+000, 4.591572e+000, -8.150937e+000, -4.082320e+000, -7.409011e+000, -1.438596e+001, 6.166443e-001, -1.690771e-001, 1.464492e+001, 1.335871e+001, 7.300946e+000, -9.535504e+000, 7.713411e+000, -5.270055e+000, 3.169180e+001, -9.219884e+000, 2.144791e+000, -1.873356e+001, 1.431471e+001, -1.301798e+000, -8.731367e+000, -6.158310e+000, -7.340219e+000, -1.051398e+001, -2.822954e+000, -6.892466e+000, -4.560892e+000, 7.038133e+000, -3.744892e-002, -1.138211e+001, 7.117035e+000, 6.050560e-001, -8.832769e+000, -2.263764e+001, 5.692330e+000, 1.456143e+001, 1.808248e+000, -2.672251e+000, 7.963979e+000, 3.161414e+000, -1.952098e+000, -2.095599e+000, -1.497295e+001, -6.107784e+000, -3.112552e+000, 2.690830e-001, -1.301993e+001, -7.456007e+000, -4.550236e+000, -1.951412e+000, 2.569964e+000, 1.935647e+000},
{7.834457e+000, 4.685408e+000, 6.671073e+000, 3.804847e+000, -4.775333e+000, 2.638312e+000, 2.113830e+000, 2.488738e+000, -1.840324e-001, 6.374053e+000, -5.024777e+000, 7.942002e-001, 2.714115e+000, -8.071288e+000, -3.397291e+000, 1.482363e-001, -1.176656e+001, 7.013569e+000, 1.748408e+000, -1.991607e+000, -1.293791e+000, -3.725783e+000, 3.942101e+000, -8.793014e-001, -1.924659e+001, 1.006843e+001, -1.028818e+001, -1.287789e+001, -7.108269e+000, -1.479079e+001, -1.168655e+001, 6.355380e+000, 1.079365e+001, -7.773902e+000, -2.837067e+000, -1.429629e+000, -1.756939e+001, 1.143460e+001, -5.078547e+000, -5.769279e+000, -1.436287e+001, 5.781967e+000, -1.394585e+001, 5.282040e+000, -1.101642e+001, 1.449031e+000, 3.412337e+000, -8.326642e+000, 4.803877e+000, 4.211327e+000, -6.363281e+000, 3.608108e+000, -1.754444e+000, -6.020242e+000, 3.395452e+000, 2.206509e+000, -2.881528e-001, 5.625105e+000, 1.926206e+000, 3.963036e+000, -2.760889e+000, 5.378718e+000, -1.488148e+000, -3.525498e+000, 3.030115e+000, 6.104137e+000, 4.123332e-001, 7.011026e+000, -8.457607e+000, -3.460971e+000, -9.378340e+000, -5.475190e+000, 1.644171e+000, -5.941199e+000, 1.103306e+000, 6.715177e+000, 2.700095e+000, -3.909612e+000, -2.869007e+000, 8.144496e+000, 5.712180e+000, -2.805630e+000, 9.181527e+000, 1.508175e+000, 1.152985e+001, 2.135374e+000, 4.765248e+000, -3.266196e+000, -6.388529e+000, 5.305917e+000, -3.092654e+000, 7.572183e+000, 6.535834e+000, -2.248392e+000, -8.601846e+000, -7.829726e+000, 3.026258e+001, 2.593227e+000, 5.660917e+000, -4.996508e+000, 3.498150e+000, 1.106538e+001, -4.549187e+000, -7.989577e+000, 8.052490e+000, -5.327433e+000, 2.767392e+001, -2.795845e+001, -1.920371e+001, 4.460368e+000, -6.372155e+000, -9.618014e+000, -6.057045e+000, 2.411838e+000, -2.570185e+001, 1.320387e+001, -4.753867e+000, 8.259888e+000, 6.863291e+000, -2.263970e+001, -2.010530e+001, -1.699072e+000, -1.004152e+001, 4.627437e+000, 1.450234e+001, -5.827958e+000, -1.677293e+001, -7.906545e+000, 1.254174e+001, -2.656448e+000, -6.465019e+000, -6.362243e+000, 1.623989e+001, -4.852198e+000, 1.709342e+001, 7.041245e+000, 1.819624e+000, 8.213680e+000, -5.399879e+000, 2.692068e+000, -6.391997e+000, 3.098070e+000, 3.680090e+000, 6.421067e-002, 3.411255e-001, 1.688086e+000, -1.026562e+001, 2.581478e+000, -6.637811e-001, -4.527754e-001},
{6.115700e+000, 3.537783e+000, -3.386774e+000, -8.724529e-002, 6.364154e+000, 7.690907e-002, -5.601755e+000, 3.101647e+000, -3.653459e+000, 2.675707e+000, 3.120015e+000, -2.071853e-001, -8.958095e+000, -1.368168e-001, -2.999641e-001, 3.701724e+000, -6.444549e+000, -5.034710e+000, 4.371885e-001, 1.261814e+001, -1.054758e+001, -6.561275e+000, -1.143712e+001, -1.496404e+001, -9.020011e+000, 1.383282e+001, -4.688203e+000, 8.419119e-002, -1.950022e+001, 3.807024e+000, 1.551461e+001, 1.533118e+001, 2.352948e+001, -1.447352e+001, 4.905220e+000, 1.029306e+001, -4.013061e+000, -1.181912e+001, -6.342345e+000, 1.241253e+001, -5.334894e+000, -7.125039e-001, -5.624876e+000, -1.119432e+001, 3.085621e+000, -2.246580e+000, 2.702261e+000, 1.031415e+001, -1.012079e+001, 1.117632e+001, -4.587803e+000, 6.717348e+000, -1.693706e+001, 6.808223e+000, 3.062931e+000, -1.022892e+000, 6.106198e+000, -6.078253e+000, -2.680485e+000, -7.482484e-001, 1.192708e+001, 1.130601e+001, 7.904004e-001, -2.823091e+000, 2.850591e+000, 6.687327e-001, -4.586764e+000, -


© ISO/IEC 2004 — All rights reserved

Copyright International Organization for Standardization
Provided by IHS under license with ISO
No reproduction or networking permitted without license from IHS
Not for Resale

5.809791e+000, -4.170177e-001, -1.390417e+000, -7.965435e+000, -4.842894e+000, -2.944350e+000, 1.045514e+000, -4.940256e+000, -1.563782e+000, -2.150360e+000, 9.113276e+000, 1.123090e+000, -1.337097e+000, 8.241120e-001, 7.698496e+000, 6.499303e+000, -4.701696e+000, 1.429181e+000, 1.075173e+001, -2.106530e+000, -2.867748e+000, -2.555365e+000, -2.844495e+000, 8.324712e-001, -5.412049e+000, 1.572641e+001, -2.438481e+000, -3.290075e+000, -1.355619e+000, -1.341789e+001, 2.969174e+000, -9.944498e+000, -1.605744e+001, 1.864832e+000, -1.510709e+001, 1.138506e+001, -8.098296e+000, 1.483066e+001, -6.186060e+000, 8.509150e+000, 9.182759e-002, -2.016207e+001, 2.003500e+000, -2.417418e+001, 1.173466e+000, 1.808028e+001, 4.317256e+000, -1.974431e+000, -3.034372e+000, -3.977488e+000, 1.158210e+001, -2.042461e+000, 1.736785e+000, 1.970700e+001, 2.649808e+001, 4.134243e+000, 2.150607e+000, -1.998159e+001, -7.049774e+000, 1.109249e+001, -2.196994e+001, -3.216753e+000, -1.648502e+001, 8.461760e-001, 5.185726e+000, 2.510602e+000, -2.079790e-002, -1.068115e+001, -8.658821e-001, -6.081607e-001, -5.888704e+000, 8.848864e-001, -4.842048e+000, -3.782876e+000, 5.548804e+000, -5.683003e+000, -5.304164e+000, -8.881291e+000, 1.024063e+000, 1.176498e+000, -1.434878e+000, 9.634603e+000, 2.681805e-001},

{-6.799327e-001, 1.933062e+000, 1.210719e+000, 8.990282e+000, -4.090523e+000, 3.002573e+000, -6.533477e+000, -1.707209e+001, 1.322007e+001, 1.058289e+001, 6.405907e+000, 5.169956e+000, -2.429152e+000, 5.341604e+000, 4.938290e+000, 5.266419e+000, -4.803860e+000, -4.202333e+000, -2.988772e+000, -1.072228e+001, -7.735891e+000, 1.973470e+000, 6.751822e+000, -6.866926e+000, 9.442705e+000, 1.215575e+000, -1.238227e+001, 1.117936e+001, -1.725404e+001, -5.470498e+000, -4.233580e+000, -3.834039e+000, -2.776768e+000, -2.566299e+001, -3.477785e+000, -1.138277e+001, -6.596340e+000, -2.091314e+001, 1.116673e+001, -6.520193e+000, 8.377185e+000, 9.388734e-001, 1.213118e+000, 8.935902e+000, 3.477306e-001, 6.866658e+000, 4.739179e+000, -1.210435e+001, -2.047163e+000, 3.199417e+000, 2.371429e+000, 1.422949e+000, -3.420838e+000, 5.541448e+000, 4.396030e+000, 4.049069e+000, 2.107321e+000, -3.801970e+000, -4.128389e+000, -6.164778e-001, -6.727679e+000, 1.551608e+001, -4.610108e+000, -2.898406e+000, -1.912380e+000, 8.827792e-001, -3.181039e+000, 2.890817e+000, 2.743875e-001, -2.618980e+000, 8.317655e-001, -2.074116e+000, -1.212701e+000, -7.960036e+000, 3.381683e+000, -6.012218e+000, -3.307913e+000, -1.211630e+001, -2.241211e+000, 6.058030e+000, 8.796781e+000, -4.014736e+000, -1.283250e+001, -5.256946e+000, -1.847677e+000, 7.884138e+000, -5.402721e+000, -2.820899e+000, -4.753721e+000, -2.005528e+001, 1.199639e+000, -7.856584e+000, 1.309481e+001, -3.868366e+000, 7.360452e+000, -1.880083e+000, 2.667777e+000, 1.936284e+000, -2.235549e+000, -1.044900e+001, -5.764631e+000, -3.144319e+000, 2.275370e+001, -7.860580e+000, -8.710429e+000, -2.818495e+000, 1.227856e+001, 1.200164e+000, -1.352504e+000, -1.466932e+001, 3.177198e+001, -2.611418e+001, -1.719593e+001, 2.227310e+001, 6.280723e+000, -7.021100e+000, -2.580704e+000, -2.633733e+000, 1.477049e+001, 6.119086e+000, 1.451666e+001, 4.115816e+000, -6.987370e+000, -2.635699e+000, -6.841274e+000, 7.016665e-001, -1.606195e+001, 2.158180e+000, 6.005894e+000, -7.699880e+000, -5.228979e+000, -8.649484e+000, -5.652127e+000, 5.165676e+000, -1.090873e+001, 2.850672e+000, 5.036596e+000, 1.195122e+001, -6.212591e+000, -2.464830e+000, -2.236368e+000, -7.816498e+000, -4.242647e-002, 1.199462e-001, -2.731636e+000, -2.593255e+000, 4.471802e+000, -1.602450e+000, 1.098383e+000, -5.997217e+000},

{7.842945e+000, 5.080328e+000, 1.836473e+000, -7.751421e+000, -1.461964e+000, -3.460586e+000, -3.323784e+000, -1.668686e+000, 3.320841e+000, 2.281651e-001, 6.906142e-001, 7.386514e+000, -1.265829e+001, -9.687642e+000, -7.084674e+000, 2.261958e+000, -3.504056e-002, 6.957200e+000, -5.199482e+000, 1.060790e+001, -2.437541e+001, 6.834680e-001, 9.028457e+000, 1.053896e+001, -5.612454e+000, -6.288346e+000, -6.701896e+000, 1.782462e+001, 4.644429e+000, -7.444940e+000, 1.411754e+001, 2.893585e-001, 1.628136e+001, 1.852308e+001, 9.709989e+000, -1.073438e+000, 1.846859e-001, -6.215044e+000, -1.037966e+001, -2.210532e+001, 2.832300e+000, 7.538908e+000, 8.410585e+000, 8.847344e+000, -8.620280e+000, -5.979355e-001, -1.634104e+001, -1.704603e+001, 1.375609e+000, 6.585168e+000, -3.557775e-001, 9.067940e+000, -7.301480e-001, -3.889956e+000, -7.131820e+000, 3.622258e+000, 6.711843e+000, -1.109376e+001, 1.040568e+000, 7.835689e+000, 5.124470e+000, -5.685502e+000, -2.314764e+000, 8.816469e+000, 1.103132e+000, -4.644263e+000, -5.106815e+000, -2.170398e+000, -1.202759e+000, -4.678506e+000, -9.729052e+000, -6.109456e+000, 5.102833e+000, 4.115453e+000, 7.302771e-001, 2.398352e+000, -1.107073e+001, -5.653458e+000, -7.154156e-001, 3.396765e+000, -1.711879e+000, 6.339133e+000, 2.960294e+000, -2.603451e+000, -5.913559e+000, 2.520600e+000, 1.175938e+001, -2.380196e+000, 7.850193e-001, 4.530923e+000, -7.217224e+000, -6.433470e+000, -7.623719e-001, 9.316685e+000, -1.183387e+000, -8.124288e+000, 7.431435e+000, 1.427718e+001, -5.733675e-001, 2.193888e+001, 6.564340e+000, -2.606214e-001, 2.729299e+001, 1.447232e+001, -7.496695e+000, 1.122765e+001, 1.530524e+001, 1.141438e+001, 1.270890e+001, 5.858028e+000, -6.611143e+000, -4.984542e+000, 1.518751e+001, 8.519269e+000,

© ISO/IEC 2004 — All rights reserved
--`,,```,,,,````-`-`,,`,,`,`,,`---


Copyright International Organization for Standardization
Provided by IHS under license with ISO
No reproduction or networking permitted without license from IHS
Not for Resale

-2.625417e-001, 6.523563e+000, 1.255626e+000, 2.216459e+001, -1.096685e+001, 5.003541e+000, 4.719439e+000, -7.326580e+000,
1.714521e+001, 1.480517e+001, 6.922460e+000, -2.925284e+000, 5.077472e+000, 4.193109e+000, 1.942614e+001, -2.807802e+000,
4.347629e+000, -4.150416e+000, 5.886026e+000, 7.397032e+000, 6.600578e+000, 1.291991e+001, 1.049569e+001, 8.700154e+000,
7.527232e+000, -6.892870e+000, -1.212018e+001, -1.867991e+000, -6.733755e+000, -1.702523e+000, 2.342888e+001,
6.999457e+000, -3.024956e+000, 2.928391e+000, -3.801869e+000, 4.766500e+000},
{-9.145982e+000, -1.252516e+000, 1.816064e+000, -4.774368e+000, 5.313409e+000, 2.747100e+000, 3.160216e+000, -
5.442965e+000, 2.277471e+000, 5.102117e+000, -5.201569e+000, -5.295703e+000, 2.489663e+000, -2.219793e+000, -
9.695948e+000, -7.967110e+000, -4.423043e+000, 1.835738e+001, -9.256845e+000, 5.414879e+000, 4.639607e+000, 1.687080e-001,
-1.492654e+001, -3.531462e+000, -1.535698e+001, -1.253999e+001, -4.347062e+000, 2.077911e+001, 6.554018e+000,
1.813974e+000, -2.640036e+000, 1.470114e+001, 3.346077e+000, -1.059817e+001, -1.816943e+000, -3.686958e+000,
1.245035e+001, 1.245696e+000, -6.783454e-001, -7.976877e+000, 1.204112e+001, -1.308694e+001, 1.857212e+000, 7.238912e+000,
2.276320e+000, 2.244971e+000, 4.447797e+000, 5.058774e+000, 4.617410e+000, -1.448100e+001, -4.168697e+000, 1.090731e+001,
-2.630180e+000, 1.845324e+001, -2.150388e+000, -3.759650e+000, -5.687317e+000, 6.328293e-001, 3.263791e+000, 4.958908e-001,
-7.220754e+000, -1.695193e+000, 2.781627e-001, -1.184436e+001, 4.804680e+000, 4.746208e+000, -7.384484e-001, 6.691712e+000,
2.665632e+000, 8.823896e+000, 1.090206e+001, 2.094728e+000, 4.756331e+000, 1.281136e+000, -2.910126e+000, -5.535316e+000,
-6.491976e-001, -7.507961e-002, 5.100547e+000, -8.956909e+000, 1.085698e+001, 1.758297e+000, 2.121967e+000, -3.409211e+000,
3.420460e+000, 8.045409e+000, 1.115112e+000, -8.306892e+000, 1.138206e+001, 8.686711e+000, 1.086851e-001, -8.430725e-001, -
5.319164e+000, -4.333092e+000, -1.173477e+001, -9.256241e+000, 1.542067e+001, -1.211829e+001, 1.691717e+001,
1.511415e+001, 1.100211e+000, 6.855560e+000, 4.559206e+000, 4.515880e+000, 7.558445e+000, -9.468067e+000, 3.134764e+000, -
3.306718e+000, -6.547964e-001, -3.500920e+001, 3.699058e+000, -3.924686e+000, -1.897978e+001, -1.946094e+001,
1.277343e+001, -7.673048e+000, -1.296627e+001, 1.625331e+001, -2.860082e+000, -5.785178e+000, -1.093808e+001,
5.801233e+000, 6.610076e+000, 8.007482e+000, -4.305481e+000, 1.540482e+001, 8.642898e+000, 2.422784e+000, -1.410763e+001,
-1.585464e+001, 6.873154e+000, -1.531796e+001, -1.068423e+001, 1.040837e+001, 3.773082e+000, 7.984965e+000, -
5.875670e+000, 2.724723e+000, -1.080011e+000, -1.651602e+001, 6.974974e+000, -3.575471e+000, 6.412875e+000,
1.480136e+001, -6.371214e+000, -5.600135e+000, -2.240010e+000, 2.139010e+000, 8.812121e+000, 3.347247e+000},
{9.265344e+000, 5.570551e+000, 6.873678e+000, 6.868711e+000, 1.949230e+000, -8.212755e+000, -6.135650e+000,
1.037991e+000, -6.734371e+000, -5.822914e+000, -5.432173e+000, -3.166679e+000, 3.493025e-002, 3.772695e+000, -
3.689003e+000, -2.549585e+000, 1.274787e+001, 4.652409e+000, -7.968061e+000, -4.165905e+000, 2.671190e+000, -
2.310510e+000, -3.535791e-001, 6.716357e+000, -1.071890e+000, 8.123472e+000, 5.109875e+000, 6.771525e-001, 9.789053e+000,
2.089539e+000, 7.295641e+000, -9.960965e+000, 2.355521e-001, 4.718510e+000, 7.327016e+000, 1.815762e+001, 3.805477e+000,
1.368420e+000, 1.177995e+000, -1.209465e+001, -1.845992e+000, 1.368250e+001, -2.424447e+000, 3.383443e+000, -
3.694751e+000, 2.570141e+000, -6.529321e+000, 6.641192e+000, 4.517605e+000, 6.741307e+000, -4.569432e+000, -
8.028503e+000, -4.884293e+000, 7.686374e+000, -1.135873e+000, 2.007942e+000, 1.159715e+000, 2.500112e+000, -
5.940577e+000, -2.636646e+000, -2.680149e+000, 3.840850e-003, -3.416067e+000, -5.755921e+000, 1.079988e+001, 2.636664e-001,
-1.071650e+001, 4.561383e+000, 3.557866e+000, -3.230619e+000, -1.117650e+001, -9.405475e+000, 6.317136e-001, -
5.142236e+000, 4.881206e+000, 5.160756e+000, 5.146592e+000, 3.755508e+000, -6.696169e+000, -4.259950e+000, -
6.119600e+000, -1.304991e+000, -6.262905e+000, -8.201703e+000, 4.033745e+000, 5.108588e+000, -2.387238e+000,
2.635177e+000, 9.596409e+000, 3.136817e+000, 2.295087e+001, -2.790039e+000, -7.178744e+000, -6.331762e+000, -
1.128402e+001, -1.491479e+001, -7.360968e+000, -4.130038e+000, -1.179614e+001, -2.245489e+000, 1.433232e+001,
1.412093e+001, 9.919621e+000, 7.579110e+000, -7.393427e+000, -6.445713e+000, 7.905400e+000, 7.906546e+000, -
5.273218e+000, -1.138612e+001, -1.255285e+000, 8.173592e+000, -7.983761e+000, -6.555252e+000, -5.591859e+000, -
4.126303e+001, 7.821026e-001, -1.421972e+001, 2.529413e+001, 2.712083e+001, 1.007753e+001, 2.274356e+000, -8.286951e+000,
8.759043e+000, 1.691426e+001, -1.030648e+001, -1.888535e+001, -1.121835e+001, 8.759268e-001, 5.376432e+000, -
2.419464e+000, -1.028204e+001, 4.387270e+000, -1.758645e+001, 4.079835e+000, 1.831053e+000, -1.273273e+001, -
7.275494e+000, 1.013477e+001, -4.616776e-001, 8.133938e-001, 2.041876e+000, -1.240685e+001, 3.542886e-001, -9.055981e-001,
2.085075e-001, -3.962523e+000, 6.159224e-001, 8.418745e+000, 2.564076e+000},
{1.067139e+000, 5.600227e+000, -2.521068e-001, 1.535261e+000, 6.435038e+000, -1.681865e+000, 8.803046e+000, 1.492531e+000,
-1.906550e+000, 6.846430e+000, 1.241811e+000, 1.345514e+001, -5.162205e-001, -7.089856e+000, -1.106802e+000,


© ISO/IEC 2004 — All rights reserved

Copyright International Organization for Standardization
Provided by IHS under license with ISO
No reproduction or networking permitted without license from IHS
Not for Resale

3.292112e+000, 1.994203e+000, -1.354518e+000, -8.348253e+000, -8.400827e+000, -1.476861e+000, -1.387494e+001,
5.159256e+000, -6.524951e+000, 2.965812e+000, -1.504549e+000, 1.016443e+000, 9.825941e+000, -6.621238e+000, 3.366841e-001,
3.296168e+000, 3.094839e+000, 6.702274e+000, -9.463921e+000, 3.084084e+000, -3.626853e+000, -1.128649e+000, -
8.029158e+000, -2.194056e+001, -5.015944e+000, -7.415257e-001, 8.276525e+000, -1.348120e+001, 4.302491e+000, -
5.823746e+000, -6.987914e-001, -7.145690e+000, -8.835935e+000, 9.838579e-001, 7.312412e+000, -4.220795e+000, 7.671238e+000,
4.277187e-001, 6.114152e+000, 5.762190e+000, -7.919633e+000, -1.096246e+001, 9.400712e+000, -9.250074e-001, -1.186324e+000,
6.422774e+000, -1.277931e+000, 1.090126e+001, 7.075077e-001, 5.979924e+000, 2.507640e+000, 8.725438e+000, -6.823571e+000,
1.368456e+001, -1.074912e+001, -1.274175e+000, -5.339998e+000, 1.530646e+000, -3.279724e+000, -7.488243e+000, -
4.305088e+000, 4.022025e+000, 3.258393e+000, 1.005755e+000, 4.755413e+000, -9.734911e+000, 1.084845e+001, -3.570932e+000,
2.342208e+000, 6.544717e+000, -1.150860e+001, 2.377965e+000, -3.128863e+000, -4.581511e-001, 7.656051e+000, -
9.183873e+000, -2.562277e+000, -4.148727e+000, -6.363531e+000, -9.070078e+000, -1.093884e+000, -4.834478e+000,
4.185083e+000, -8.085522e+000, -1.060914e+001, -5.641565e+000, 6.072123e+000, -6.144490e+000, -1.206744e+001, -
1.243774e+001, -1.807518e+001, -1.985617e+000, 1.091459e+000, -8.548937e+000, -2.704637e+001, -2.116145e+000,
2.569330e+001, 8.804254e+000, -1.538172e+001, -8.071215e+000, 1.693712e+001, 1.608956e+001, -1.165998e+001,
9.044395e+000, -2.163237e+001, 2.934547e+001, -2.666978e+001, -1.676493e+001, 7.958292e+000, 7.910619e+000,
8.653406e+000, 7.566203e+000, 8.805932e+000, 6.672882e+000, 6.121306e+000, 9.494935e+000, 1.110568e+001, -2.936317e+000,
8.645521e+000, -1.886980e+001, 5.571962e+000, 3.820207e+000, -1.144852e+000, -1.716907e+001, -4.767636e+000, -
4.389573e+000, -1.346638e+001, -4.475318e+000, -6.537077e+000, 6.298811e+000, 4.104131e+000, -3.852288e+000,
8.940252e+000, 2.215476e+000, 9.190020e-001},
{-6.830849e+000, -6.886212e+000, -2.602080e+000, -6.984555e-002, -3.373167e+000, 3.808124e+000, 8.163032e+000,
8.378888e+000, -1.930274e+000, -1.270342e+000, 7.370090e-001, -1.014957e+000, 2.328444e+000, -2.575324e+000, -
3.591830e+000, -4.771493e+000, 1.136776e+001, 1.096056e+001, 6.269079e+000, 3.650015e+000, 1.056519e+001, -4.054257e+000,
-7.662785e+000, -4.418532e+000, -1.239621e+001, 1.268153e+001, -2.259347e+001, -1.118885e+001, 5.416912e-001, -
2.369284e+001, 1.315411e+001, -7.800749e+000, 1.668216e+001, 1.914105e+001, 7.033552e+000, -1.886772e-001, -1.131873e+000,
-1.986452e+001, -2.236151e+000, 1.280885e+001, 1.718749e+001, -9.865336e+000, -2.324427e+000, 3.041325e+000,
1.004165e+000, 5.087083e+000, 1.674226e+001, 1.382988e+000, 5.843593e+000, 1.177407e+001, 2.462874e+000, 6.084927e+000,
1.377002e+001, 4.906820e+000, -9.583092e-001, -3.627075e+000, 1.707075e+000, 5.079208e+000, -6.535175e+000, 1.083121e+000,
-3.867110e+000, -5.048809e+000, 6.646912e+000, -1.640679e+000, -8.977410e+000, -3.539890e+000, -6.199627e+000,
1.690089e+000, 3.597038e+000, -5.749858e+000, 8.268689e+000, 7.287089e+000, -1.853544e+000, 2.104516e+000, 4.685722e-001,
1.610934e+000, 3.196309e+000, 7.035540e+000, 2.874724e+000, 1.123401e+000, 2.001051e+000, 2.194148e+000, 7.930465e+000,
1.465579e+001, 1.066575e+000, 1.855327e+000, -6.227643e+000, -4.929845e-001, 1.549240e+001, -6.416576e+000, 3.774187e+000,
-2.879384e+000, -1.595143e+001, 1.718358e+000, 4.474404e+000, 9.271126e-001, 1.867839e+001, -1.234761e+001, -9.473661e-001,
8.219941e+000, 6.132624e+000, 7.570754e-001, -8.560128e+000, -8.843555e+000, -9.817823e+000, 3.134833e+000, -
5.365229e+000, 1.785609e+001, -7.179763e+000, 5.699717e+000, 7.884244e+000, -1.788212e+001, 2.222513e+000, 1.878179e+001,
-1.049287e+001, 4.265258e+000, -2.031604e+001, -2.459563e+001, -2.545882e+000, -2.625130e+000, 8.479404e+000, -
1.390716e+000, -4.582497e+000, 2.774475e+001, -1.712815e+001, -1.850410e+001, -6.363643e+000, 1.252061e+001, -
1.133233e+001, -1.808319e+000, 1.261517e+001, -9.136586e-001, -1.581713e+000, 9.969653e-001, 3.227473e+000, -4.152873e-002,
6.923087e+000, -7.253157e+000, 5.606472e+000, 5.720078e+000, 2.035950e+000, 4.009234e+000, 8.652436e-001, 1.681639e+000, -
1.006128e+001, 9.346764e+000, -6.309707e+000, 7.661935e+000, -6.398479e+000, 7.888804e+000},
{7.775119e-001, 1.158982e+000, -2.724603e+000, 4.433283e+000, -7.802192e+000, 9.619169e+000, -1.358991e+000, -
4.149615e+000, 8.427631e+000, -7.542851e+000, 5.494295e+000, -5.268094e+000, -1.221585e+001, 1.407541e+001, -
7.508580e+000, -2.203538e+000, 3.016127e+000, 5.482337e+000, 4.317421e+000, 6.014165e+000, 7.390492e+000, -2.275166e+001,
1.999729e+000, 2.086944e+001, -1.308131e+000, 1.423785e+001, 1.868400e+000, 1.020314e+001, 1.899087e+001, 1.423617e+001,
1.589290e+001, -1.167091e+001, 3.149692e+000, 5.610429e+000, -7.820424e-001, 1.666286e+000, -8.209389e+000, -
1.220617e+001, 1.783100e+000, -2.867894e+000, -2.387803e+000, -1.705339e+001, -2.012318e+001, -6.979994e+000,
1.736476e+001, -9.087938e+000, -1.134376e+001, -1.911757e+001, 5.278257e+000, -2.231239e+000, 4.031392e+000,
2.115805e+001, -2.913671e+000, -1.025015e+001, -4.773565e+000, -7.907492e+000, -8.172632e+000, 4.390532e+000, -
6.403161e+000, 9.573198e+000, -5.772667e-001, 7.826604e+000, -1.358877e+001, -7.915583e+000, -2.473749e+000, -

© ISO/IEC 2004 — All rights reserved


--`,,```,,,,````-`-`,,`,,`,`,,`---
Copyright International Organization for Standardization
Provided by IHS under license with ISO
No reproduction or networking permitted without license from IHS
Not for Resale

5.893434e+000, -2.548870e+000, -3.565997e+000, -9.673682e-001, -3.397248e+000, -1.741367e-001, 1.347598e+000, -4.440842e+000, -3.402719e+000, -3.724367e-001, 2.907692e+000, -5.048484e+000, -3.668756e+000, 6.881415e+000, 9.618671e+000, -6.120554e-001, -1.067488e+001, -7.117892e+000, 7.181057e+000, -7.717116e-001, 7.754261e+000, -4.185921e+000, 1.173606e+001, 7.485313e+000, -5.446699e+000, 7.335815e+000, 3.917993e+000, -1.537200e+000, -1.518023e+000, -1.187153e+001, -1.194742e+001, 1.048190e+000, 6.359694e+000, 4.523837e+000, 9.704744e+000, -5.649337e+000, 1.631773e+000, -1.659716e+000, 1.534054e+000, -1.554723e+001, -5.873001e+000, -4.564122e+000, -8.829474e+000, -1.484147e+001, 7.135798e+000, -3.849158e+000, -1.406996e+001, 1.188464e+000, 1.427997e+000, 1.825557e+001, -2.117268e+001, 1.535235e+001, 7.807233e+000, 6.083420e-001, -1.027624e+001, -5.096674e+000, -3.704026e+000, -1.408428e+000, -1.172749e+000, -1.936188e+001, 6.104930e+000, -1.387800e+001, 1.760835e+001, -5.086449e+000, -1.255121e+001, 2.508434e+000, 4.133749e+000, 1.436018e+001, -1.220895e+001, -6.344938e+000, -1.993792e+001, -9.613629e+000, -2.302601e+000, -2.165835e+001, 7.069979e+000, 7.055793e+000, -1.768395e+001, 8.673799e+000, -1.000207e+000, 1.145858e+001, -6.983674e+000, -8.909019e+000, -1.017073e+001, -1.745190e+000, 4.154082e-001},

{-1.050763e+001, -5.780016e+000, 1.521972e+001, -1.101242e+000, 1.094096e+001, 1.988614e+000, 1.677893e+000, -4.373249e+000, 8.706598e+000, -2.006421e+000, 4.856374e+000, 2.753088e+000, 5.781656e+000, 7.925428e+000, -1.888248e+000, -3.909429e+000, 1.810675e+000, 8.076896e+000, 9.360429e-001, 1.150683e+000, -1.833412e+000, 1.182187e+000, 2.458299e+000, -1.666573e+001, -1.981909e+000, -1.932757e+001, -3.776099e+000, 9.160611e+000, -8.004299e+000, -1.068793e+001, -5.912686e+000, -5.671075e+000, -5.389788e+000, 3.275781e+000, -2.723012e+000, -2.944641e+000, 1.622666e+000, 3.108452e+000, 1.482385e+001, 1.819206e+001, 1.314562e+001, -1.032439e+001, -2.286520e+001, -7.538619e+000, -1.795487e+000, 8.130944e+000, -8.972296e-001, -1.281210e+001, -2.382873e-001, -3.246268e+000, -2.084215e-001, -9.592031e+000, -5.969634e+000, 5.166132e+000, 1.806263e+000, 1.107566e+001, 3.356082e+000, 4.985523e+000, 5.402752e+000, 6.857765e+000, -6.849235e+000, 6.357552e+000, 1.460726e+000, 4.607087e+000, 5.650512e+000, -2.489325e+000, -1.492397e+000, 1.368639e+000, 6.177274e-001, 5.842106e-002, 1.230403e+001, 5.852018e+000, 1.606998e+001, -5.990301e+000, -3.697074e+000, -5.999508e+000, 6.203402e+000, 6.457056e+000, -3.640226e+000, -9.869377e+000, 3.325019e+000, 3.322249e+000, -7.834546e+000, 6.676975e+000, -1.092087e+000, -4.269482e+000, -5.661655e+000, -1.813059e+001, -9.987764e+000, -5.225421e+000, 2.047602e+000, 1.107403e+001, -3.874682e+000, -3.127684e-001, -5.013452e+000, -9.652430e+000, -5.847795e+000, -7.407148e+000, 4.755389e+000, 4.358162e+000, 5.855739e+000, -1.401418e+001, 3.086869e+000, 6.467329e+000, -4.258829e+000, 5.972182e+000, -2.324182e+001, -7.406234e-001, 1.478179e+001, 4.646123e+000, -2.946882e+001, -6.373802e-001, 1.881615e+001, 2.231165e+000, 5.100019e+000, -1.104656e+001, 5.578223e+000, 4.996494e+000, 3.385181e+001, -2.087940e+001, 5.974781e-001, -1.623741e+001, 1.817464e+001, -1.687844e+001, 5.485962e+000, -1.350262e+001, -1.803120e+001, -5.856039e+000, 4.904922e+000, -9.106895e+000, 7.730278e+000, -6.684259e+000, 1.394425e+001, 1.834604e+001, 1.212227e+001, 3.570805e+000, 5.476379e+000, -5.028141e+000, 3.060906e+000, 7.305662e-001, -6.808482e-001, 1.192677e+001, 4.926050e+000, -3.013606e+000, -1.857578e+000, 3.885931e+000, 5.510200e-001, 1.487053e+000, -1.415331e+001, -4.950543e+000},

{-5.040703e+000, 5.331183e+000, 1.552936e+000, -7.205640e+000, 1.070902e+001, -3.743057e+000, 1.388287e-001, 1.098399e+001, -4.610168e+000, 4.435129e+000, -4.142295e+000, 5.166205e+000, -4.060617e+000, 2.684069e-001, 5.705277e+000, -1.602444e+001, -7.587953e+000, 6.442057e+000, 4.731868e+000, 6.648618e-002, -7.623503e+000, 4.784758e+000, -4.951008e+000, -1.718703e+000, 2.794386e+000, 3.158669e-001, 2.293163e+000, 8.920546e+000, 4.018209e-001, -4.700502e+000, -4.825136e-001, 1.200589e+001, -1.457898e+001, 1.106824e+001, -3.561528e+000, -8.146926e+000, 7.233491e+000, 9.984766e+000, 8.301588e+000, -2.828419e+000, -2.298122e+001, -1.686464e+000, -1.019971e+001, 2.877368e+000, 4.135222e+000, -9.490220e-001, 1.613577e+001, -4.053740e+000, 8.127907e-001, 3.719026e+001, 6.836523e+000, -4.185834e+000, -5.241057e+000, 6.752357e+000, -4.003455e+000, 9.738174e+000, -9.407111e+000, -1.756410e+000, 1.447244e+000, -4.784705e+000, -6.540902e-001, 2.327043e+000, 2.360300e+000, 3.356043e-001, -9.156453e+000, 6.437977e-001, -4.102172e+000, -2.362072e+000, 6.466696e-001, -3.956962e+000, 5.752155e+000, -6.641806e+000, 5.310873e+000, 7.376786e+000, -5.488890e+000, -2.029002e+000, -5.807830e-001, 1.145017e+001, 2.634213e+000, -7.423619e+000, 1.620872e+000, -1.143211e+000, 8.802235e+000, 4.753971e+000, -4.203642e-001, -6.613198e+000, 6.849596e+000, 1.393581e-001, -6.961362e-002, -2.884828e-001, 6.880404e+000, -1.221482e+000, -2.308882e+000, -6.272002e+000, 3.169851e+000, -4.155237e+000, -3.870636e+000, -6.085749e+000, 1.407562e+001, -1.150897e+001, 3.725261e+000, 3.262130e+000, 6.946273e+000, 6.201965e+000, -1.840446e+001, -1.271276e+001, -8.269739e-001,


© ISO/IEC 2004 — All rights reserved

Copyright International Organization for Standardization
Provided by IHS under license with ISO
No reproduction or networking permitted without license from IHS
Not for Resale

1.222926e+001, 2.990039e+001, -2.504129e+001, -1.951378e+001, -1.258778e+001, 1.054202e+001, 1.587762e+000, -9.093083e+000, -8.105487e-001, 4.885675e+000, -4.372241e+000, 5.193617e-001, 1.343037e+001, -1.525741e+001, 1.373177e+001, -1.776968e+001, -5.827424e+000, -7.167104e+000, -1.294840e+001, 1.629596e+001, 2.042723e+001, 1.540440e+001, -1.011528e+001, -1.678496e+000, 1.965768e+001, -9.419996e+000, -1.509984e+001, 9.313391e+000, -5.671893e+000, 1.061904e+001, 1.079889e+001, 6.524092e-002, 4.459087e+000, 6.471681e+000, -2.039119e-003, 9.207608e+000, -6.302255e+000, -1.154313e+001, -3.412521e+000, -1.186864e+001, -7.039340e+000, -6.065347e-001, 7.934646e+000},
{2.680199e+000, -3.233241e-001, -7.851537e+000, -5.709114e+000, -4.334641e+000, 1.828325e+000, -3.804952e+000, 1.892793e+000, -6.416997e-001, -3.303949e+000, 3.239729e-001, -9.737564e+000, -1.124485e+001, -1.829806e+000, 5.280899e+000, 2.391877e+000, -6.722270e+000, -7.671647e+000, -1.955516e+000, -7.299554e+000, -6.558084e+000, -7.024301e+000, -1.447827e+001, -5.987971e+000, 1.829895e+001, -7.687401e+000, -5.670852e+000, 1.342538e+000, 9.923947e+000, 7.597093e+000, 4.002274e+000, 3.242358e+000, 1.915572e+001, 5.247530e+000, -3.739215e+000, -8.246818e+000, -1.315103e+001, 1.748011e+001, 1.835303e+001, -1.077711e+001, 6.784488e+000, -1.207812e+001, 4.845748e-001, 2.388636e+000, -1.652543e+001, -6.495151e+000, -1.044594e+001, 5.580781e-001, 2.076304e+000, 3.278757e+000, -2.305654e+000, -3.483800e+000, 4.058716e+000, 7.514167e+000, 1.021889e+001, -7.934094e+000, -3.371330e+000, -2.399235e+000, 4.547568e+000, 3.081850e+000, 5.369629e+000, -4.528882e-001, -1.434920e+000, -3.415035e+000, -1.097990e+001, 3.767000e+000, -2.371903e+000, -1.245157e+001, -5.954899e-001, -1.131592e+000, -2.951262e+000, 1.717110e+000, -4.677415e+000, 8.102541e+000, -3.796557e-001, 2.588203e+000, -7.024380e+000, 2.816823e-001, 4.432065e+000, 6.479069e-001, -2.427103e+000, -4.496485e+000, -2.853833e+000, -1.125576e+000, -4.424701e+000, 5.636169e+000, 2.223511e+000, 5.160006e+000, -2.870434e+000, 4.922862e-001, -6.698385e+000, -2.003046e+000, -4.950863e+000, -8.135527e+000, 4.055319e-001, 5.133708e-002, 3.980350e+000, 3.172711e+000, 2.257961e-001, -9.485475e+000, 1.101606e+001, -1.007396e+001, 1.282544e+001, 4.001277e+000, -8.014692e+000, 1.481285e+001, 2.066014e+001, 2.241349e+001, -8.836982e-002, 1.610347e+001, 5.582781e+000, 1.364010e+001, -4.837583e+000, -3.381683e+001, -2.621330e+001, 9.751348e+000, 1.222653e+000, 6.223840e-001, 2.888592e+001, -3.472837e+000, -5.660481e+000, 1.401490e+001, 1.240061e+001, -7.862337e+000, -2.983205e+001, 1.072446e+001, -7.230163e+000, 1.176617e+001, 1.286192e+001, 5.060512e+000, 1.115246e+000, 2.498870e+000, -6.720367e+000, 1.887248e+000, -1.783639e+001, 2.842868e-001, -2.339034e+000, -2.296054e+000, 6.350995e+000, 1.173342e+001, 4.504992e+000, -1.016075e+001, -1.451974e+001, 9.379844e+000, -3.518126e-001, -5.433724e+000, -1.407540e+000, -2.055069e+000, 6.351940e+000, 6.852347e+000},
{-5.265421e+000, 5.435969e+000, -5.717752e+000, 3.678776e+000, -3.708052e+000, 5.506760e+000, 2.461768e+000, 1.173241e+001, -1.351145e+000, 3.839206e+000, -7.124163e+000, -1.034023e+001, -1.250811e+001, -2.921797e+000, 1.209392e+000, 5.817214e+000, 5.839823e+000, -3.942435e+000, -5.560141e+000, 4.986484e+000, -7.419824e+000, 7.068193e+000, -7.233278e+000, -7.242524e+000, -2.864842e-001, 2.833648e+001, 1.596885e+001, -8.821779e+000, -4.394514e+000, 1.384643e+001, -1.370271e+001, 1.324876e+001, 6.836903e+000, -3.461246e+000, -5.743063e+000, -6.188069e-001, 1.040402e+000, 8.248526e+000, -9.482971e+000, 4.429167e+000, 2.276854e+001, 1.137891e+001, 1.454258e+000, 6.305373e+000, -3.814288e-002, -9.191432e+000, -7.452470e+000, 7.735538e+000, 1.500195e+001, 1.536051e+001, -1.026779e+001, 5.690462e+000, -4.999472e-001, -3.604459e+000, -1.515603e+000, 1.650008e+000, 1.293894e+001, -6.977183e-001, 1.584400e+000, -2.115792e+000, -1.865638e+000, 4.451036e+000, -9.131232e-001, -3.849888e+000, -5.976336e+000, -1.053583e+000, -2.171845e+000, -2.206157e+000, 5.788911e+000, -8.597918e+000, 7.149118e+000, -3.644488e+000, -8.752310e+000, -3.943689e-002, -6.748252e+000, 4.350844e+000, 1.553009e+000, 2.320133e+000, 1.603432e+000, 1.317913e+000, -1.285753e+000, -8.779876e+000, 4.191568e+000, -2.788543e+000, 1.925209e+000, 1.646999e-001, 4.792508e+000, 1.294624e+001, 1.957537e+000, -8.854248e+000, -1.179080e+001, -4.175338e+000, 4.682897e-001, -5.885280e+000, -7.851589e+000, 7.288590e+000, 1.045563e+001, 1.555178e+001, -2.693350e+000, 1.272432e+001, 6.054830e+000, -2.252975e+001, -2.326644e+000, 7.253454e+000, -2.765900e+000, 9.015167e+000, -3.005819e+000, 2.737863e+000, -7.144463e-001, -8.254570e+000, 1.690249e+000, -1.919764e+001, 4.999388e+000, 1.080597e+001, 2.183010e+000, -1.369082e+001, 1.961685e+001, -7.282316e+000, 1.205168e+001, -2.282464e+001, -3.918967e+000, 1.126101e+001, 1.753051e+001, 6.526736e+000, 3.045933e+001, 6.939314e+000, 3.570971e+000, 1.343678e+001, -8.577812e+000, -1.693562e+000, -3.839067e+000, 8.258410e+000, -1.190640e+001, -6.377518e+000, -2.541818e+000, 6.896070e+000, -5.629580e+000, 1.308599e+001, -1.246774e+001, 1.042513e+001, 4.044476e+000, 8.114286e-001, -7.793003e+000, -1.981391e+000, -8.002165e+000, 3.683390e+000, 5.736830e+000, 6.518750e+000, 1.313485e+001, 8.951462e+000}

© ISO/IEC 2004 — All rights reserved


Copyright International Organization for Standardization
Provided by IHS under license with ISO
No reproduction or networking permitted without license from IHS
Not for Resale

};

PCLDA basis matrix $\Psi_1^g$ [70][256]={

{3.049231e-002, -1.255326e-001, 3.521935e-002, 7.201125e-003, 8.052915e-003, -4.805325e-002, 2.355593e-002, -6.476397e-002, -6.580263e-003, -6.476397e-002, 2.355593e-002, -4.805325e-002, 8.052915e-003, 7.201125e-003, 3.521935e-002, -1.255326e-001, -2.154842e-001, 3.304083e-002, 6.881707e-002, -5.085707e-002, -2.520738e-003, -2.223253e-002, 9.951451e-004, -1.426449e-002, -6.455173e-002, -7.408927e-002, 3.682591e-002, -5.652008e-002, -2.032140e-002, 7.536254e-003, 1.243177e-002, -2.942219e-002, -1.692518e-001, 9.712297e-002, -1.116771e-001, -5.366681e-003, 2.633002e-002, 3.159771e-002, -1.915401e-002, -4.464629e-003, -2.318553e-002, 1.393625e-002, -8.908625e-003, -7.093647e-002, 3.257383e-002, -5.275003e-002, -1.452059e-001, 1.174777e-001, 2.550148e-002, 2.145764e-002, 2.405050e-002, -3.803578e-003, -1.571701e-001, 1.183158e-003, -5.070742e-002, 3.253097e-002, -4.954604e-004, -2.160841e-002, -2.742739e-002, 1.017173e-002, -1.717731e-001, -1.074560e-001, 8.321292e-002, -4.947500e-002, -3.084081e-002, 3.503834e-002, -1.480169e-001, 3.038485e-002, 2.665328e-002, 3.664849e-002, -2.462144e-002, -2.193543e-002, -2.672979e-002, -3.896783e-002, -7.559372e-002, 4.810195e-002, 4.189325e-002, 1.446886e-002, -1.117639e-001, -7.078874e-002, -7.676727e-002, -8.145621e-002, 2.160030e-003, -4.114615e-002, -1.071635e-002, -9.271694e-003, 1.569831e-002, -1.233249e-002, 3.621054e-002, -2.691731e-002, 6.130086e-002, -1.195916e-002, -6.485048e-002, -3.542793e-002, -5.439209e-002, -3.438407e-002, -1.510725e-001, -4.009849e-002, -1.182183e-001, 2.889298e-002, 7.661044e-002, -5.293411e-002, -6.148763e-002, 3.548989e-002, 4.019250e-003, 3.784374e-002, -6.272039e-002, 2.606333e-003, 3.657010e-002, 4.066253e-002, 4.761708e-002, -9.642154e-002, -3.993594e-002, 3.805439e-003, -6.875411e-002, 9.910039e-002, -1.214538e-002, -3.434639e-002, 4.213783e-002, 1.046671e-002, 2.002283e-002, -2.191176e-002, 3.979100e-002, -9.217025e-002, -2.107218e-002, 8.158359e-002, 1.068023e-002, 5.512838e-003, 1.357298e-016, 4.359581e-003, -1.556297e-002, 5.676100e-003, 6.750696e-003, -1.680114e-002, -3.653916e-003, -1.785988e-002, 5.079230e-002, 1.785988e-002, 3.653916e-003, 1.680114e-002, -6.750696e-003, -5.676100e-003, 1.556297e-002, -4.359581e-003, 1.494600e-001, -1.799890e-001, 4.099287e-002, -7.759687e-002, -5.556746e-002, 4.991512e-002, -8.843354e-003, -1.400197e-001, -1.286940e-002, -2.507425e-002, 1.685129e-002, -2.086835e-002, -7.613194e-003, -5.268479e-002, 6.640125e-002, -1.761860e-001, 6.448584e-002, 2.759436e-002, -1.110206e-001, 5.987749e-002, -7.209734e-002, -3.899430e-002, 3.557680e-002, -2.676306e-003, -2.202720e-004, 1.323867e-002, 6.984373e-002, -2.280721e-002, -1.076624e-001, 3.288189e-002, 4.649042e-003, -6.505657e-003, 8.904664e-002, 4.251276e-002, 5.649762e-003, -9.294677e-002, -2.301319e-003, 2.692144e-002, -6.855613e-002, 1.281991e-002, -5.692076e-002, -3.925075e-002, -2.367441e-002, 6.565364e-002, 1.204170e-001, -1.926423e-001, 3.811229e-002, 3.615267e-002, -5.981065e-003, 1.070012e-001, -1.299531e-001, -2.195338e-002, 1.224434e-002, 5.419238e-002, 6.459138e-003, -1.089295e-001, -5.570740e-002, 2.186808e-002, 8.726869e-003, 1.754157e-003, 1.266118e-002, 5.150753e-002, -6.056499e-002, 6.403184e-002, 5.230518e-002, -6.073867e-002, -7.074356e-002, -3.187844e-002, -4.889420e-002, -1.349947e-002, -6.299547e-002, -1.139845e-002, 7.677527e-002, -5.024461e-002, 4.810445e-003, 8.693548e-002, -1.027089e-001, 8.206412e-002, 3.466580e-002, -4.849849e-002, -4.356232e-003, 9.974349e-002, -1.651534e-001, 7.298288e-003, 5.284447e-002, -1.064594e-002, -6.251090e-002, 3.353355e-002, -5.473942e-002, -9.560497e-003, -3.694917e-002, -2.718746e-002, 4.731024e-002, -9.086992e-003, 2.140675e-003, 1.066160e-001, 1.193934e-001, 1.642215e-002, 4.535352e-002, -5.446035e-002, -6.692088e-002, 3.257778e-002, 3.744309e-002, -6.389730e-002, -9.134936e-003, -8.605392e-003, 6.892200e-003, 4.749036e-002, -8.137296e-002, -1.192133e-001, 4.396019e-002, 2.443274e-002},

{-9.939475e-002, 5.683832e-002, 1.164384e-002, 1.878941e-002, -3.071545e-002, -2.471408e-002, 7.277832e-002, 5.411194e-003, -4.274963e-002, 5.411194e-003, 7.277832e-002, -2.471408e-002, -3.071545e-002, 1.878941e-002, 1.164384e-002, 5.683832e-002, -2.217623e-001, -1.996240e-002, 1.802431e-002, -4.209628e-002, 5.277740e-002, -3.018110e-002, 1.171574e-003, -1.019965e-001, 7.077129e-002, -5.964819e-003, -1.183317e-001, 5.249051e-003, 7.616626e-002, -5.036313e-002, 4.040572e-003, 5.176595e-003, 5.732131e-002, 5.026307e-002, -7.688155e-002, 7.384683e-002, -1.589872e-001, 8.268245e-002, 2.310682e-002, -5.156005e-002, -9.053325e-002, -3.166897e-002, 3.738098e-002, 6.541820e-002, -9.275652e-002, 1.358196e-001, -6.864586e-002, -1.163368e-002, -3.220524e-002, -4.229770e-002, 5.205730e-002, -4.597519e-002, 9.046242e-002, 4.359078e-002, -7.764367e-002, -2.361894e-002, 1.666082e-002, -6.221672e-002, -6.415621e-002, -3.040438e-002, 1.034128e-001, -2.071436e-002, 1.190852e-001, -2.502570e-002, -2.792498e-002, -1.213291e-002, 4.820304e-003, -6.819458e-002, -7.737824e-002, 6.047474e-003, 9.036768e-002, 2.605118e-002, 2.933122e-002, 6.242240e-002, 1.457518e-001, 6.144794e-002, -4.653428e-002, -1.326513e-001, -7.435678e-002, 1.257294e-001, -4.644698e-002, -8.992434e-003, 1.102817e-002, 2.406140e-002, 1.000016e-001, -8.529206e-003, -2.409901e-002, -8.194349e-002, -5.925723e-002, 1.437103e-002, -1.131900e-002, 5.410353e-002, 7.215596e-003, 1.234780e-001, 8.107470e-002, -1.901200e-001, -5.173851e-002, -4.731613e-002, -6.905642e-002, 5.485889e-002, 3.572244e-002, -5.549413e-002, -6.809132e-002, -2.375284e-002,



© ISO/IEC 2004 — All rights reserved

Copyright International Organization for Standardization
Provided by IHS under license with ISO
No reproduction or networking permitted without license from IHS
Not for Resale

2.523983e-002, 1.821432e-002, -9.130982e-004, -6.930399e-002, 9.231290e-002, 4.990188e-002, -8.925335e-002, 2.732830e-002, -6.106910e-002, -4.594925e-002, 2.724467e-002, -5.145901e-002, -6.189335e-003, -7.870396e-003, -3.294493e-002, 1.050919e-002, 2.661858e-002, 3.325818e-003, 2.077304e-002, 9.959434e-002, -1.542796e-002, -1.285163e-002, -5.673549e-003, -5.252621e-002, -1.702991e-016, -1.360080e-002, -7.580572e-003, 2.532637e-002, -1.999912e-003, 2.285175e-002, -4.908828e-002, 5.884531e-003, -5.632197e-002, -5.884531e-003, 4.908828e-002, -2.285175e-002, 1.999912e-003, -2.532637e-002, 7.580572e-003, 1.360080e-002, 6.962081e-002, 1.008604e-001, -1.470770e-001, 5.405469e-002, 1.513320e-002, 1.930617e-002, -9.007846e-002, 2.987498e-002, 6.352181e-002, 5.928069e-002, 6.058400e-003, 6.261198e-003, 6.629568e-004, 6.417510e-002, -1.276595e-001, 5.630593e-002, 4.255922e-002, 3.453872e-002, 2.147721e-002, -8.804883e-002, 9.366746e-002, 4.505950e-002, -6.321145e-002, -5.070198e-002, 6.489664e-002, -5.096509e-002, -7.391507e-002, 2.082904e-002, 7.805273e-002, -8.466579e-002, 4.097946e-002, 6.059380e-003, 1.699729e-001, 5.059018e-002, -8.715880e-002, 3.891240e-002, -7.598583e-002, 2.159426e-002, 5.048948e-002, 5.866985e-002, 7.067790e-002, 1.654401e-001, -4.001453e-003, 3.799536e-002, -3.043726e-002, 6.825088e-002, -7.619578e-002, 1.574779e-002, -4.248664e-002, -8.726211e-002, 6.006001e-002, -3.573152e-003, 8.524978e-002, 2.585470e-002, 5.521453e-002, 1.896063e-002, 5.090131e-002, -1.242445e-001, 4.124745e-002, -8.089717e-003, -1.488470e-002, 7.434203e-003, 6.621452e-002, -7.780601e-002, 1.239689e-001, 3.863173e-002, -9.853121e-002, 7.450972e-002, 7.264692e-002, -2.349522e-002, -1.071788e-001, 9.462125e-003, -4.309107e-002, 3.218631e-002, -1.184880e-001, -8.330101e-002, 7.699331e-002, -6.459885e-003, -1.951026e-002, 7.656207e-003, 3.741889e-002, -9.095930e-002, 1.514822e-002, 9.463797e-002, -9.674581e-002, -4.251763e-002, 8.625946e-002, 8.438031e-003, 2.932170e-003, 6.137138e-002, 8.150622e-002, -1.857660e-002, -1.914048e-002, 4.691419e-002, -1.074643e-001, 5.472604e-002, 3.201211e-002, 7.968640e-002, -4.557699e-002, 4.067016e-002, -1.759967e-003, -7.004181e-002, 1.724893e-002, 2.699775e-002, 2.819969e-002, 7.482800e-003, 1.179221e-002, -2.837824e-002, 4.336880e-004, -3.599543e-003, 1.744737e-002, -3.340460e-002},
{1.412114e-002, 7.526364e-003, 1.897352e-002, -2.251194e-002, 9.842638e-002, -6.756458e-002, -2.337406e-002, 5.493014e-002, 2.354272e-002, 5.493014e-002, -2.337406e-002, -6.756458e-002, 9.842638e-002, -2.251194e-002, 1.897352e-002, 7.526364e-003, -1.054090e-001, -2.690240e-003, 9.997981e-002, -3.229799e-002, 3.810475e-002, 5.588749e-002, -5.395448e-002, 1.230350e-002, 5.252427e-002, 8.571425e-003, -1.722218e-002, 5.519455e-002, 6.873993e-002, 3.037945e-002, 7.413214e-002, -6.802305e-002, 9.728972e-002, 5.218801e-002, -1.028653e-001, -2.679295e-002, -2.631387e-002, 3.350688e-002, 1.883116e-002, -3.244531e-002, 3.020148e-002, -1.103330e-002, 3.758577e-002, 5.526986e-002, 1.441906e-002, 2.709009e-002, -2.101721e-001, 6.146198e-002, 9.765988e-002, 9.319810e-002, 3.223537e-002, 2.564425e-002, -1.888210e-002, -1.293757e-001, -2.216501e-003, -3.364396e-002, -3.887195e-002, -7.722640e-003, 3.801261e-004, -6.700056e-002, -2.986681e-002, -5.136379e-003, -4.989470e-002, 1.230392e-001, -1.013713e-001, -6.016324e-002, -3.785796e-002, 3.998274e-002, 7.654054e-002, 1.332715e-002, -8.129959e-002, 4.446161e-002, 7.428993e-002, 5.925324e-002, -2.287172e-002, 9.871214e-003, 6.212815e-002, 1.670011e-002, 7.443260e-002, -1.035355e-001, -4.472791e-002, -6.657978e-003, -3.136993e-003, 6.344683e-002, 4.620090e-002, 3.642864e-002, 5.558704e-002, -1.618457e-002, -5.773932e-003, -2.237880e-002, 3.663119e-002, -5.939638e-002, 7.394142e-002, -7.077905e-002, 4.466478e-002, 3.939586e-002, 9.927180e-002, 2.858155e-002, -2.818116e-002, 2.834862e-003, -8.459905e-002, 5.507470e-002, -1.815274e-002, -2.560132e-002, -9.351033e-003, 3.051307e-003, -1.123010e-002, 5.070295e-002, -9.071249e-002, -3.606150e-002, -4.221130e-002, 2.288846e-002, -4.981637e-003, -2.449562e-002, -3.087318e-002, -2.075872e-003, -1.117213e-002, 1.884397e-002, -3.690928e-002, -1.163117e-002, 2.442075e-004, -6.105501e-004, -3.074840e-002, 1.284294e-003, -2.138375e-002, 2.065856e-003, -2.086278e-002, 5.716179e-002, 6.341160e-018, 6.304796e-003, 1.616983e-002, -1.265173e-002, 2.150430e-002, -1.271410e-002, 6.333525e-003, 2.750520e-002, 4.621497e-002, -2.750520e-002, -6.333525e-003, 1.271410e-002, -2.150430e-002, 1.265173e-002, -1.616983e-002, -6.304796e-003, 2.830409e-001, 2.826394e-002, -6.699503e-002, -1.015406e-001, -6.757577e-002, 2.080498e-001, 3.461160e-002, -1.660388e-002, -1.176355e-002, -2.143891e-002, 1.050558e-001, 1.169406e-001, -1.036679e-001, -8.740397e-002, -1.076142e-001, 8.103054e-002, -2.444686e-001, 1.543681e-001, -1.240100e-002, 1.641775e-001, -7.114288e-002, -2.785067e-002, 1.765323e-002, 4.945763e-002, -3.366199e-002, 5.855124e-002, 9.610845e-003, -1.704897e-002, 2.162406e-002, 6.423675e-002, 1.638020e-003, 1.887510e-001, 6.895369e-002, -1.125850e-001, 1.083022e-001, 4.033527e-002, 1.174048e-001, -1.061299e-001, 2.894102e-002, 2.753290e-002, 9.948463e-002, -1.725477e-002, -3.331502e-002, 1.353078e-002, 7.326046e-002, -4.539800e-002, 6.630080e-002, -8.881945e-002, 2.918441e-002, -2.055673e-002, -4.975136e-002, 9.757531e-002, -3.792003e-002, 1.167704e-002, -2.000370e-003, 9.506776e-002, -2.592474e-002, 5.990820e-002, 3.753020e-002, -2.323732e-002, -1.241106e-002, 1.335646e-002, 3.896765e-002, 4.875769e-002, -4.222703e-002, 5.038115e-002, 7.562440e-002, 3.145387e-002, -3.603482e-002, -1.965428e-002, 5.357778e-002, -5.106482e-002, 4.669630e-002, 5.589433e-002, 8.457407e-002, 2.022655e-002, 1.614464e-002, 3.782922e-002, 6.708284e-002, 1.073773e-001, 2.744262e-002, 6.279275e-002, 2.546675e-002, -2.303232e-002, -3.646572e-002, 1.878997e-002, -2.837896e-002, -7.788200e-003,

© ISO/IEC 2004 — All rights reserved


Copyright International Organization for Standardization
Provided by IHS under license with ISO
No reproduction or networking permitted without license from IHS
Not for Resale

5.808150e-002, 1.544369e-002, -1.380598e-002, 9.418526e-002, -4.942701e-002, 2.260147e-002, 9.826136e-002, 6.002651e-002, -2.648101e-002, -4.419944e-002, -1.320545e-002, 1.219110e-001, -2.827882e-002, 4.822071e-002, 8.604137e-003, 2.595837e-002, -2.123731e-002, 1.495035e-002, 6.446113e-002, -1.982062e-002, 2.534975e-002, 1.113749e-001, -1.222774e-002, -4.747334e-003},
{3.908472e-002, 7.416202e-003, -6.104226e-003, 2.494951e-002, -2.139447e-002, 4.333604e-002, -4.818707e-002, 4.168383e-002, 6.767464e-003, 4.168383e-002, -4.818707e-002, 4.333604e-002, -2.139447e-002, 2.494951e-002, -6.104226e-003, 7.416202e-003, -2.416520e-001, 2.353754e-001, -7.875224e-003, 5.294238e-002, -2.815960e-002, -9.462239e-002, 7.833532e-002, 3.253005e-002, 1.516983e-002, -4.039174e-002, 5.224096e-002, 6.727513e-002, -5.174541e-002, -1.841950e-002, 5.236729e-002, 1.115245e-001, 4.094663e-002, -1.044451e-001, 4.109533e-002, 6.612849e-002, -3.366438e-002, -4.781847e-002, -7.447315e-002, 2.299548e-004, 1.530015e-002, 9.236521e-002, 3.802079e-003, -1.508249e-001, 1.073815e-003, 1.222697e-002, 7.277126e-002, -7.291480e-002, -2.163565e-001, 2.537901e-002, 7.827187e-002, 2.103897e-002, 1.939012e-002, 5.043606e-002, 1.656622e-002, 2.679533e-002, 3.307259e-002, 2.065416e-002, 4.169908e-002, -2.730961e-002, 1.556402e-002, -5.369887e-003, 9.620633e-002, 2.899773e-002, 1.930522e-004, 1.032860e-001, 3.660938e-002, -1.692602e-001, -2.445474e-002, 1.893576e-002, 2.278442e-002, -9.192260e-002, -3.234070e-002, 4.439195e-003, -2.644378e-002, 9.228401e-002, -9.136365e-002, -7.905611e-002, 2.752694e-002, 2.401741e-002, 7.784697e-003, 1.443788e-002, -6.205688e-002, -2.264620e-003, -4.206010e-002, -1.015151e-002, -3.150647e-002, 3.356145e-002, -5.397325e-003, 1.946229e-002, 9.504561e-003, -4.032371e-002, -3.698857e-002, 3.421049e-002, 2.513239e-002, 5.363466e-002, -6.679331e-002, 4.696019e-003, -2.862728e-002, 7.539595e-002, -1.343104e-002, 2.721956e-002, 4.146437e-002, 2.178062e-002, 1.773841e-002, -1.116928e-002, -2.138873e-002, 2.110078e-002, 2.808337e-002, 3.978845e-002, -6.217405e-002, 5.649300e-002, -6.374951e-002, -1.893802e-002, 3.170117e-002, -2.206926e-003, 4.610061e-002, -3.880972e-002, 1.677372e-002, -8.609244e-003, 5.113821e-003, -1.528152e-002, 2.167921e-002, -4.156589e-003, -2.490606e-002, 9.109561e-003, 4.030374e-003, -7.154624e-004, -5.778977e-017, 1.415536e-002, -9.264424e-003, 9.228513e-003, 9.083390e-003, 8.293269e-003, -5.798884e-003, 2.801653e-003, -8.283885e-003, -2.801653e-003, 5.798884e-003, -8.293269e-003, -9.083390e-003, -9.228513e-003, 9.264424e-003, -1.415536e-002, -2.182062e-001, 2.074328e-001, -2.443713e-002, -4.754306e-002, -2.116954e-002, -6.735283e-002, 8.504069e-002, 2.397135e-002, 7.493078e-003, -2.301408e-002, 1.651937e-002, -6.165786e-002, -5.998194e-004, 3.100107e-002, -8.436380e-003, 5.753534e-002, -1.935864e-003, -2.343437e-001, 2.089692e-001, -5.857777e-002, 1.163420e-001, -6.926254e-002, -3.769497e-004, 4.035149e-002, 7.144753e-003, 2.539263e-002, 2.450238e-002, 2.036714e-002, -7.863266e-002, -3.178439e-002, 2.701698e-001, -1.398329e-001, 1.283489e-002, -1.331369e-002, -1.747574e-001, 2.467711e-002, 1.258152e-002, 5.109469e-002, 5.037900e-002, 9.379566e-003, -6.461663e-002, -3.127095e-002, -3.614711e-002, 1.117841e-001, -5.632670e-002, 4.686584e-003, -7.795637e-002, -1.791121e-003, 1.707791e-001, -9.272499e-002, -7.233866e-002, 2.757321e-002, -4.013647e-002, 5.342960e-002, -9.765559e-002, -4.145798e-002, -1.877689e-003, -4.321577e-002, 3.310553e-002, -7.077228e-002, -3.350330e-002, 1.799548e-002, -3.668117e-003, 2.471020e-002, -3.740120e-002, 2.287367e-002, -2.483277e-002, 8.488168e-002, 4.758570e-002, -4.342273e-002, 7.559708e-002, -1.955536e-002, -1.549099e-002, -1.479472e-002, -8.008232e-005, -3.692074e-002, 5.142711e-002, 4.656643e-002, 1.477354e-003, 2.834268e-002, 1.633066e-002, -1.019949e-002, 3.477376e-002, 9.815426e-003, 4.352096e-002, 1.930212e-002, -2.934479e-003, -8.124595e-003, -3.272426e-002, 4.397134e-002, -4.476606e-002, -6.613146e-003, 4.962555e-002, -2.759503e-002, -1.693451e-002, -1.208700e-002, 1.314791e-001, -5.811177e-002, -1.745642e-003, 6.917553e-002, -7.743147e-002, 1.623787e-002, -2.352458e-002, -2.241959e-002, 2.532202e-002, -1.762428e-002, 5.616028e-003, 2.923726e-002, -4.627638e-002, 1.337348e-002, 7.879906e-003, -2.293040e-002},
{1.916929e-002, 6.629614e-002, -1.027601e-001, 6.005911e-002, 4.796408e-002, -3.116591e-002, 3.621514e-002, 2.100595e-002, -5.736706e-002, 2.100595e-002, 3.621514e-002, -3.116591e-002, 4.796408e-002, 6.005911e-002, -1.027601e-001, 6.629614e-002, 2.203324e-001, -4.835347e-002, 3.333314e-002, -2.817594e-002, -7.111986e-002, 6.451894e-002, 4.196086e-002, -2.710635e-002, 2.857546e-002, 1.483531e-003, -5.236011e-003, 1.064715e-001, -9.756143e-002, -2.464423e-002, 7.962884e-002, -6.234360e-002, -3.199641e-003, 6.781052e-002, 2.893308e-002, -1.255468e-001, 3.459051e-002, -1.010584e-002, 6.167219e-002, 4.219270e-002, 4.609926e-002, 1.478703e-002, 2.065835e-002, 4.324027e-003, 4.353451e-002, -7.124505e-002, -5.559496e-002, 9.070801e-002, -2.041909e-001, 1.217834e-001, -6.350240e-003, 1.726576e-002, -1.132255e-003, -6.629332e-002, -3.132419e-003, 1.624689e-002, 2.770396e-002, 4.526756e-002, -5.710829e-002, 1.391872e-002, 2.872852e-003, -3.469674e-002, -7.351842e-002, 1.077364e-001, 9.178414e-002, -4.088111e-002, 7.440158e-002, 4.957223e-002, -1.018657e-002, 9.464887e-003, -4.120678e-002, 1.109808e-002, -2.967666e-002, -3.146047e-002, -2.450984e-002, -6.460404e-002, 1.862107e-002, 7.583949e-002, 3.435983e-002, 1.714173e-002, -4.268971e-003, 2.010582e-002, -6.848535e-002, -5.113482e-002, -7.006013e-002, 3.907578e-002, 4.308849e-002, -1.706678e-002, 1.967258e-002, -1.313493e-002, 2.119989e-002, 2.254120e-002, 3.698595e-002, 3.133815e-002, 7.744994e-003, 1.528787e-002, -7.293069e-002, 6.395877e-002, 3.936457e-002, -1.938961e-002, -7.022154e-004, 1.576278e-003, -4.015238e-002, 4.069721e-003, -


© ISO/IEC 2004 — All rights reserved

Copyright International Organization for Standardization
Provided by IHS under license with ISO
No reproduction or networking permitted without license from IHS
Not for Resale

1.476797e-002, 3.016517e-002, -6.836359e-002, -2.837355e-002, 6.497645e-002, 1.557897e-002, -5.236178e-002, 1.468761e-001, 2.270082e-002, -1.549938e-002, 4.198957e-002, -2.376074e-002, -2.099683e-002, -1.299816e-003, 6.494577e-003, -2.468798e-002, 3.599184e-003, -1.809845e-002, -2.263121e-002, -3.729104e-002, 2.587375e-002, -3.159855e-002, 7.670588e-002, -2.375815e-002, 2.792094e-017, -2.935328e-003, 1.403510e-003, 2.939635e-002, -3.855839e-002, 1.208501e-002, 5.807187e-003, 5.202336e-003, -5.708488e-002, -5.202336e-003, -5.807187e-003, -1.208501e-002, 3.855839e-002, -2.939635e-002, -1.403510e-003, 2.935328e-003, 2.527103e-001, -1.885929e-001, 7.443488e-002, 1.084904e-001, -1.086267e-001, 1.053742e-001, -9.141571e-003, -7.062070e-002, -8.520274e-002, -2.057324e-002, 8.079916e-002, 4.984691e-002, -9.538827e-002, 7.270871e-002, 4.842738e-002, -2.097078e-001, 6.962833e-002, -1.783543e-001, 5.990427e-002, 1.186070e-001, 8.506289e-002, -9.892570e-002, 8.620487e-002, 5.800903e-002, 2.836760e-002, -6.748777e-003, 4.823838e-002, -9.922140e-002, -4.572438e-004, 9.084435e-002, 1.870046e-002, -4.978616e-002, -2.536486e-003, 9.530879e-002, -9.717584e-002, -9.587485e-002, 1.422519e-001, 5.113775e-002, -3.802915e-002, 1.466529e-002, -5.157560e-003, 2.210062e-002, -3.438329e-002, 6.191877e-002, 1.026521e-001, -5.467959e-002, -1.961768e-002, 9.656236e-004, 1.194118e-001, -6.277151e-002, -1.719385e-002, -2.392027e-002, -2.268089e-002, 2.762772e-002, 1.171151e-001, 4.038210e-002, -3.285004e-002, -6.160859e-002, 2.137200e-002, -4.081645e-002, -1.217607e-001, -7.022392e-002, 1.905632e-002, -7.107539e-002, 1.540563e-001, 6.930765e-002, -1.077018e-001, 4.076053e-002, 3.711224e-002, 1.874004e-002, -2.861580e-003, 6.633691e-003, 4.599899e-002, 4.114348e-002, 8.671687e-003, -2.533203e-003, 6.414262e-002, -3.545047e-002, -1.075504e-001, 5.292752e-002, 5.098936e-002, -1.669802e-002, 3.928556e-002, -3.878584e-002, 2.068263e-002, -1.968667e-002, -4.030157e-002, -1.541978e-002, -8.516067e-003, 3.581255e-003, -3.521745e-002, -4.711916e-002, 1.967039e-002, -2.667622e-002, 4.826658e-002, -3.205634e-003, 1.198878e-001, -6.321923e-002, -2.546679e-002, -9.553598e-002, 1.145648e-002, 4.634069e-003, 3.167545e-002, 5.686601e-003, 5.678786e-003, 2.031390e-002, 3.696547e-002, 2.513341e-003, -7.097886e-004, -6.836419e-002, 2.161280e-002, -6.216869e-002},
{2.182349e-002, 4.825296e-002, -2.332531e-002, 2.615213e-002, -2.213429e-002, -3.848822e-003, 5.821760e-002, 7.046983e-003, 2.492101e-002, 7.046983e-003, 5.821760e-002, -3.848822e-003, -2.213429e-002, 2.615213e-002, -2.332531e-002, 4.825296e-002, -6.840042e-002, 4.021302e-002, 9.442934e-002, 2.129813e-002, -5.120380e-002, -3.987787e-002, -3.369063e-002, 7.494493e-003, 5.375316e-002, 4.752109e-002, 2.405509e-002, 4.665652e-002, -9.133496e-002, -5.654039e-002, 1.676482e-001, -5.577132e-002, -1.462605e-002, 3.161363e-002, -1.100138e-002, 7.890332e-002, -6.032297e-004, -1.245954e-002, -2.846316e-002, -4.530499e-003, -1.548524e-002, 1.707197e-002, 4.445034e-002, -1.084875e-001, 6.162699e-002, 9.270728e-002, 1.185329e-001, -8.245011e-002, -2.046492e-002, 1.186392e-001, -1.164839e-001, -7.991328e-002, 1.355294e-002, -3.763361e-002, -1.729816e-002, -4.968409e-002, -6.490936e-003, -6.213232e-003, 5.634583e-003, 7.536578e-002, -4.257615e-002, -7.736348e-002, 9.255944e-002, -8.008038e-002, 5.046026e-002, 1.537077e-001, -8.527182e-002, 8.767650e-002, 7.451817e-002, -3.306413e-002, 9.383797e-003, 3.054536e-002, -4.254014e-002, 2.072561e-002, 2.322012e-002, 2.105307e-002, 5.163041e-003, 7.972822e-002, -1.933037e-002, 7.845044e-002, -1.278199e-001, 6.023928e-002, 1.545323e-002, 2.829610e-002, 9.134017e-002, -5.044548e-002, -6.058303e-002, -3.552026e-002, -6.312292e-003, -4.641294e-004, 4.530291e-002, -1.750047e-002, -9.268940e-003, -9.919053e-003, 1.691117e-001, -2.114127e-002, 7.172015e-002, 6.086408e-002, -8.111500e-002, 5.615117e-003, -1.071843e-002, 1.612248e-002, -4.885211e-002, -1.794924e-002, -1.594796e-002, -3.144064e-002, 8.140251e-003, 2.658089e-002, 1.671429e-003, -4.464250e-002, -1.823349e-002, 1.096636e-002, -5.873176e-002, -1.770125e-002, -3.560484e-002, 5.193340e-002, 3.395237e-003, -7.374340e-003, -2.387249e-002, -3.836249e-002, -1.229328e-002, -1.382975e-002, -3.405384e-002, 3.223460e-002, -3.035781e-002, 5.530200e-002, 5.459590e-002, -6.278528e-002, 2.141884e-017, 2.201866e-002, -4.144043e-002, 7.406030e-003, 5.090748e-002, -2.173380e-002, -1.285764e-002, 2.127773e-002, -6.355896e-002, -2.127773e-002, 1.285764e-002, 2.173380e-002, -5.090748e-002, -7.406030e-003, 4.144043e-002, -2.201866e-002, 2.309596e-002, 1.860436e-001, 6.390702e-002, -1.411517e-001, 6.729736e-002, 1.483525e-002, 2.503337e-002, -1.239752e-002, 5.263442e-002, 3.696153e-002, -2.101325e-003, -3.971079e-003, 6.460577e-002, -4.850309e-002, 2.014882e-001, -2.214493e-001, 5.475185e-003, 1.383200e-001, -2.507536e-001, 1.344928e-001, 7.003634e-002, 6.024442e-002, -7.784033e-002, -4.879803e-002, 1.039771e-002, -1.788587e-002, 3.529662e-002, 7.797672e-002, 1.244584e-002, -6.281685e-002, -9.060216e-002, 4.268215e-002, -8.980539e-002, 1.648208e-001, 2.798072e-002, 7.169604e-002, -6.976024e-002, 1.168477e-001, -1.873578e-002, 1.010977e-001, 9.511839e-004, 1.713019e-002, -8.018760e-002, 1.748335e-002, -2.061966e-002, 1.664090e-002, 1.427096e-001, -1.186761e-002, 6.844121e-002, -5.009638e-002, -1.489687e-001, 1.165894e-001, 1.046525e-001, -8.065488e-002, 1.162431e-001, 1.059396e-002, 6.287435e-002, -8.830103e-003, 4.997624e-002, 1.578727e-002, 1.631238e-003, -2.078798e-002, 8.443759e-003, 4.123477e-002, -1.862218e-002, 6.406877e-002, -3.615564e-003, 8.920207e-002, -2.711245e-002, -1.831819e-002, -5.826692e-003, 5.442065e-002, -4.316434e-002, 3.100412e-002, -3.561131e-002, 3.171116e-002, -4.603738e-002, -2.782678e-002, 1.162949e-001, -7.462327e-002, 7.537085e-002, -3.989981e-002, -2.419252e-002, 8.410245e-002, 3.475536e-002, -9.962673e-003, 3.878531e-002, 4.622259e-002,

© ISO/IEC 2004 — All rights reserved


Copyright International Organization for Standardization
Provided by IHS under license with ISO
No reproduction or networking permitted without license from IHS
Not for Resale

2.518649e-002, 4.867641e-003, 3.144936e-002, -2.937318e-002, 4.976345e-002, 6.569872e-002, -4.054674e-002, 2.586254e-002, -1.553200e-002, -2.702642e-003, 3.290819e-002, 8.715454e-002, 1.674076e-002, -4.038417e-002, 1.449424e-003, 2.181551e-002, 3.122626e-002, 1.939576e-002, 1.153166e-002, -7.163209e-003, -4.104360e-002, 4.901133e-002, 8.381393e-002, -9.263862e-002},
{1.282615e-002, 4.306212e-002, -8.630891e-002, 4.654180e-002, 8.139278e-003, -2.773196e-002, 2.500542e-002, -1.004882e-002, -9.861263e-003, -1.004882e-002, 2.500542e-002, -2.773196e-002, 8.139278e-003, 4.654180e-002, -8.630891e-002, 4.306212e-002, -1.389706e-001, 8.864350e-002, 3.474513e-002, -2.247740e-002, -8.543141e-002, 1.463211e-002, -7.647720e-003, 4.101855e-002, -2.403149e-002, 2.202905e-002, 1.884954e-002, -1.948036e-003, -2.643042e-002, -3.866726e-002, 2.490325e-002, 9.334015e-002, 6.466369e-002, 1.072500e-001, -1.307492e-001, 2.957784e-002, 5.569842e-002, -4.487429e-002, -3.588586e-002, -6.245466e-002, 2.607941e-002, -2.482572e-002, -3.831619e-002, -5.455216e-002, 8.396284e-002, -2.244047e-002, -1.818902e-001, 1.554088e-001, 2.049372e-001, -5.012733e-002, -6.110756e-002, 7.576692e-002, -9.836890e-003, -6.974262e-003, 2.540239e-002, -2.789225e-002, -2.158968e-002, -3.632147e-002, 3.128477e-002, 1.460776e-002, -1.298369e-004, 3.290032e-002, -1.144450e-001, 7.109100e-002, 1.064864e-001, -9.416989e-003, 1.231470e-001, 3.985091e-002, 3.147662e-003, 3.648590e-002, -1.142592e-001, -3.154588e-002, -1.618714e-002, -9.937508e-004, -7.933828e-002, -1.195479e-001, 4.922024e-002, 1.302965e-001, 8.590287e-002, -2.959752e-002, 6.731873e-002, -8.385066e-002, 4.385338e-002, 1.846593e-002, -1.849390e-002, -3.591476e-002, 3.870501e-003, 2.394787e-002, 2.510370e-002, 1.589121e-002, 1.702764e-002, -4.702885e-002, 1.572589e-002, 5.320125e-002, 1.143976e-002, 1.936492e-002, 1.904706e-001, 5.034565e-002, -3.108252e-002, -5.614465e-002, -5.268301e-002, 2.278409e-002, 4.972468e-002, -5.924750e-003, -2.360598e-002, 1.698323e-003, 2.095594e-002, 5.814316e-002, -3.457753e-002, -2.907057e-002, -6.788285e-002, 6.093807e-002, 6.991460e-002, 2.384687e-002, 2.335618e-003, -5.283281e-002, 3.937934e-002, 2.873401e-002, -3.332120e-002, 1.297298e-002, 3.237456e-002, 1.103276e-002, -3.862133e-002, -5.162864e-002, 4.423928e-002, 1.345789e-003, 2.230471e-002, 3.324561e-002, -1.247178e-017, 3.871283e-003, 5.655937e-003, 8.994838e-003, -1.714611e-002, -1.840390e-003, 5.668808e-003, -6.766461e-004, 4.247479e-002, 6.766461e-004, -5.668808e-003, 1.840390e-003, 1.714611e-002, -8.994838e-003, -5.655937e-003, -3.871283e-003, 3.413781e-002, -1.170696e-001, 1.132566e-001, -5.454767e-003, -2.975751e-002, 3.040880e-004, 6.500752e-002, -2.453130e-002, 1.777587e-003, 3.860128e-002, 2.307082e-002, -7.640531e-002, 7.752952e-002, -2.796779e-002, 1.040739e-002, 2.896679e-002, 4.610240e-002, 5.922434e-004, 1.216509e-001, -7.892903e-003, -8.486267e-003, -1.784242e-002, 4.255217e-002, 2.776230e-002, -2.078362e-002, 2.903801e-002, 4.844432e-002, -8.825499e-002, 9.423840e-002, -3.132688e-002, 8.567768e-002, -4.918753e-002, 4.870875e-002, -1.135646e-001, 1.988130e-001, 3.805082e-002, -1.299163e-001, 2.975402e-002, -3.155155e-002, -5.517543e-002, 3.219135e-002, 3.585229e-002, -6.831243e-003, 4.263892e-002, -1.271692e-001, 4.573652e-002, 1.997568e-001, -2.967313e-001, -1.044836e-001, -6.433207e-002, 1.202169e-001, 7.389744e-002, -2.164553e-002, -3.487776e-002, -1.432268e-002, 2.623713e-002, 1.394238e-003, 2.630032e-002, 4.239278e-002, -2.843936e-002, 3.230934e-002, -2.341741e-002, 7.140495e-002, -1.701122e-002, -8.357782e-002, -2.211053e-002, 9.249484e-002, -6.387214e-002, -5.970328e-002, 2.602993e-002, 3.012257e-002, -4.207510e-002, -5.702475e-002, -6.306350e-002, 6.330660e-002, 8.223495e-002, -1.113732e-001, -6.369714e-002, 8.494856e-002, -3.492482e-002, -3.944913e-002, 8.804934e-002, 3.487768e-003, -7.177438e-002, -3.446423e-002, 5.369599e-002, -6.331739e-002, -4.386583e-002, 1.399793e-002, -2.935515e-002, -5.706099e-002, -1.538879e-002, -5.696853e-002, -6.956341e-003, 6.490007e-002, -3.393424e-002, -1.338866e-001, -7.201088e-003, 9.167303e-003, -2.403378e-002, 9.395046e-002, -3.793362e-002, -2.706959e-002, -8.673486e-003, -7.693221e-003, 2.279345e-002, -4.601487e-003, -5.812617e-002, 7.820213e-002, -1.139148e-002, 6.266830e-002, -2.150950e-002},
{-1.678240e-002, -4.285474e-002, -1.425371e-002, 8.438903e-002, -7.976182e-002, -1.208538e-002, -2.444494e-002, 2.408118e-002, 8.232918e-003, 2.408118e-002, -2.444494e-002, -1.208538e-002, -7.976182e-002, 8.438903e-002, -1.425371e-002, -4.285474e-002, 3.852681e-002, -1.375607e-002, -9.306573e-002, 1.212927e-001, -6.997307e-002, 1.191348e-002, 6.907398e-002, -3.663138e-002, -5.626042e-002, 3.279970e-002, 7.532103e-003, -5.259163e-002, -6.955713e-002, 7.538163e-002, -8.255901e-003, -8.699962e-002, 2.239289e-001, -9.215000e-002, -8.978087e-003, -3.987762e-002, 2.666286e-004, 2.821437e-002, -3.356852e-002, -3.754601e-002, -1.481816e-002, -4.992137e-002, -7.958723e-004, -4.919343e-002, 8.946194e-002, -1.124548e-001, 1.212287e-001, -1.678200e-001, -5.786428e-002, 1.270226e-001, -5.145007e-002, -8.231010e-002, 4.383554e-002, 5.410252e-002, -3.299484e-002, 1.802116e-002, -4.346031e-002, 7.320617e-004, -5.130352e-003, 5.053114e-002, 3.863718e-002, -1.000584e-001, -4.037615e-002, 5.313188e-002, 2.457946e-001, -4.736221e-003, -1.691032e-001, 3.103916e-002, 4.862348e-002, 6.430605e-003, -5.970281e-003, -5.250238e-002, -5.367354e-003, -3.852791e-002, -4.305477e-002, -3.455210e-003, -3.161296e-002, 4.421616e-002, 2.946032e-002, -7.165377e-002, 8.584953e-002, -6.936119e-003, 6.191013e-003, 3.171361e-002, 3.054504e-002, 1.299957e-002, -4.961673e-002, 1.196782e-002, 3.076482e-002, 2.492072e-002, -2.222498e-002, -3.847171e-002, 4.669174e-002, -3.187816e-002, 7.255661e-002, -6.335202e-002, 1.409231e-001, 2.085338e-002, -5.740106e-002, 2.261575e-002, -4.579108e-002, -1.402769e-003, 2.911844e-002, 2.485603e-002, -


© ISO/IEC 2004 — All rights reserved
--`,,```,,,,````-`-`,,`,,`,`,,`---

Copyright International Organization for Standardization
Provided by IHS under license with ISO
No reproduction or networking permitted without license from IHS
Not for Resale

4.999426e-003, -3.199801e-004, 9.137603e-002, -6.835501e-003, -4.697127e-002, -1.061248e-003, 7.710914e-002, -5.435200e-002, 1.109016e-001, 1.556079e-002, -2.872178e-002, -5.168061e-002, 3.967172e-002, 2.591722e-002, -3.357762e-003, -1.352228e-002, -1.534166e-002, 2.016847e-002, -2.113716e-002, 4.051475e-002, 5.539257e-002, -6.303334e-002, 3.722534e-002, 3.225296e-003, -1.121529e-016, 1.684145e-002, -4.041046e-002, 2.110283e-002, -1.543291e-002, 8.794952e-003, -1.148062e-002, -2.526601e-002, -3.601469e-002, 2.526601e-002, 1.148062e-002, -8.794952e-003, 1.543291e-002, -2.110283e-002, 4.041046e-002, -1.684145e-002, 1.413381e-001, 1.600158e-001, -1.155528e-001, -1.177261e-001, 4.254033e-002, 2.703916e-002, -8.433050e-002, -1.152564e-002, -7.859610e-003, -1.380821e-002, -3.274552e-002, 8.487605e-003, 9.218405e-002, -1.601092e-001, 5.648945e-002, -1.304456e-001, 9.919398e-002, -2.945702e-002, -1.439713e-003, -1.084783e-002, -7.302600e-003, 1.176237e-002, -1.124831e-003, -4.189956e-002, -3.376847e-002, 2.408443e-002, -8.376609e-003, -1.248498e-002, -1.610217e-002, -9.300573e-002, 1.618479e-001, -1.708014e-001, -9.111725e-002, 1.260400e-001, -6.362501e-002, 6.768136e-002, -1.408390e-001, -2.892804e-002, -6.811417e-003, -4.333724e-002, -1.383852e-002, -2.114710e-002, 6.091934e-002, 3.383501e-003, -1.180196e-001, 7.550521e-002, 7.449169e-002, -6.113627e-002, 7.519885e-002, -1.198754e-001, -1.699633e-002, 3.764332e-002, 1.080334e-001, -3.879922e-002, -5.540734e-002, 4.315245e-002, -8.884930e-003, -7.621389e-003, -6.068998e-002, -1.226417e-002, 3.090683e-002, -1.768065e-002, 7.844278e-002, -1.084324e-001, -7.825241e-002, 4.983351e-002, -8.974815e-002, -5.072722e-002, 3.144525e-002, -3.464225e-002, -7.183833e-003, 1.861423e-003, -6.129102e-002, -4.901862e-003, -2.355756e-002, -4.149826e-005, -1.991383e-002, -7.190955e-002, -8.474850e-002, -6.565083e-002, -4.391596e-002, -3.791890e-002, -9.562016e-002, 2.571883e-002, -6.765863e-002, 1.357918e-002, 1.490329e-002, -4.608218e-002, 1.771315e-003, -7.618962e-002, -1.276253e-002, 5.690738e-002, -5.539297e-002, -9.959809e-003, 4.638029e-002, -8.632343e-002, -8.800258e-002, 7.883411e-002, -4.497128e-002, -2.571932e-002, 8.180584e-002, -3.191222e-002, -4.506296e-002, 2.879859e-002, -1.422990e-002, -1.896744e-002, -2.377733e-002, -7.263932e-002, 5.942478e-002, 1.130181e-002, -1.229239e-002, -6.603393e-002},
{-1.089490e-002, 9.816083e-003, -5.238002e-002, 3.933418e-003, -1.201359e-002, -5.247410e-002, 4.384741e-002, -3.369289e-002, 1.041746e-002, -3.369289e-002, 4.384741e-002, -5.247410e-002, -1.201359e-002, 3.933418e-003, -5.238002e-002, 9.816083e-003, -5.450362e-002, -1.408548e-002, 7.346800e-002, -4.290258e-002, 7.083458e-004, -5.817858e-002, 4.554269e-002, -2.285398e-002, -7.061493e-002, -5.334268e-002, -1.736731e-002, -5.619831e-002, 7.278543e-002, -4.507590e-002, 1.052053e-002, 3.946690e-002, 4.905045e-002, -1.675039e-001, 1.715241e-001, 5.875294e-002, -8.848219e-003, 2.706099e-002, -1.393827e-001, -3.434060e-002, -3.208640e-002, -2.570972e-002, 7.940918e-003, -5.001683e-002, -2.045265e-002, 9.092766e-002, 1.225552e-002, -1.556653e-001, -1.810458e-001, 6.774209e-002, -1.540718e-001, -3.319158e-002, 6.055956e-002, 4.941083e-002, 4.312197e-002, 2.496426e-002, -5.280981e-002, 8.288498e-003, 9.928949e-003, 2.686499e-002, -3.572870e-002, -2.888704e-002, -1.306368e-001, 1.926383e-001, -1.818280e-002, 2.903332e-002, -1.286993e-001, 1.374291e-002, 1.076208e-001, 2.246538e-003, -1.729700e-002, -3.378486e-002, 1.656058e-004, -2.509096e-002, 6.944360e-003, -2.151770e-002, 1.532371e-001, 2.452824e-002, -1.189716e-001, 1.349857e-001, -2.926806e-001, -4.496740e-002, 8.825147e-002, 5.039973e-002, -7.056073e-002, -2.266563e-002, -2.312510e-002, 2.509332e-003, -2.520947e-002, -2.894388e-002, 1.177015e-002, -8.048632e-002, -2.985349e-002, 2.667333e-002, 2.276770e-002, 3.097796e-002, -4.383582e-002, -5.159221e-003, -3.340255e-002, 5.676379e-002, -4.423740e-002, 2.332732e-002, 5.733632e-002, 3.257899e-002, -2.516867e-002, 2.108692e-002, 2.954929e-002, 3.842345e-002, -1.512868e-002, -2.538180e-002, -8.679347e-002, 3.999901e-002, -1.120145e-001, -4.395061e-002, 9.958686e-002, -7.402684e-002, 1.146414e-001, 1.655012e-002, -4.330127e-002, -2.797666e-002, -1.388710e-003, -1.022572e-002, -4.058956e-002, 4.684276e-002, 1.014710e-001, -4.337301e-002, 9.142842e-002, 5.780378e-002, -1.071660e-016, -1.269027e-002, 3.167063e-002, -2.453296e-002, -1.483121e-002, -1.871043e-002, 4.108590e-002, -3.091425e-002, 6.138012e-002, 3.091425e-002, -4.108590e-002, 1.871043e-002, 1.483121e-002, 2.453296e-002, -3.167063e-002, 1.269027e-002, 4.056191e-002, -8.285737e-002, 1.165882e-001, -8.975232e-002, -5.681994e-003, 1.738663e-003, -4.296077e-003, -4.634004e-002, 2.792710e-002, -1.636671e-002, -3.823512e-002, 1.054610e-001, -4.996258e-002, -8.457691e-002, 1.959803e-002, 2.116599e-002, -1.287858e-001, -9.204161e-002, -6.026425e-002, 4.818219e-002, -4.599086e-002, 1.449601e-002, -1.602105e-002, 1.124454e-002, -5.440864e-002, 1.705474e-002, 3.751566e-002, 2.520517e-003, -4.984778e-002, 6.033233e-002, -1.632970e-001, 7.592375e-002, -1.183459e-001, 2.360090e-002, 1.770923e-001, 3.125598e-002, -1.754051e-001, 1.273526e-002, -6.964476e-002, -1.868570e-003, 3.604145e-002, -2.000923e-002, -9.184837e-003, 8.426414e-003, -7.452398e-002, -5.541635e-002, 7.017775e-002, 7.431337e-002, 1.317196e-001, -4.104188e-002, -1.209013e-002, -4.074051e-002, 3.622915e-002, -6.679054e-002, -2.447902e-002, -3.935896e-002, 2.225123e-003, 5.298151e-003, 8.786414e-003, 6.459914e-003, 7.188425e-003, 4.848299e-002, 1.243518e-002, 3.069767e-002, 5.458811e-002, 7.107569e-003, -4.068756e-003, -1.472994e-002, -3.461509e-002, 2.928834e-003, 4.497567e-002, 2.614121e-002, -6.406238e-002, -1.215833e-002, -1.750728e-003, -1.793193e-002, -3.492225e-002, -5.431243e-002, -7.141585e-002, -5.235931e-002, 1.612740e-002, -9.440155e-002, 8.038712e-002, -3.657411e-002, -4.355108e-002, 4.456397e-002, -2.387188e-002, -7.124360e-004,

© ISO/IEC 2004 — All rights reserved


Copyright International Organization for Standardization
Provided by IHS under license with ISO
No reproduction or networking permitted without license from IHS
Not for Resale

4.829342e-003, -5.418976e-002, -3.357570e-002, 2.059186e-002, 3.674378e-002, -6.184769e-002, 7.509145e-002, -1.159865e-002, 8.040505e-002, -8.027446e-002, 4.076456e-002, 3.673084e-002, -2.921081e-002, -4.099202e-002, -4.334652e-002, -9.712793e-003, -8.770034e-003, -1.865386e-002, -2.336152e-002, -2.930047e-002, -7.205085e-002, 7.187564e-002, 7.089644e-002, -8.404558e-002},
{-4.146908e-003, -1.498647e-002, -5.371539e-002, 7.435602e-002, 5.331663e-002, -7.956300e-002, -3.216362e-002, 4.174829e-002, -8.780012e-003, 4.174829e-002, -3.216362e-002, -7.956300e-002, 5.331663e-002, 7.435602e-002, -5.371539e-002, -1.498647e-002, 9.013112e-002, 1.167744e-001, -8.552627e-002, -9.746809e-002, -6.536014e-002, 6.848030e-002, 5.878377e-002, -5.366276e-002, -2.695042e-002, -4.151599e-002, 2.184990e-002, 1.022711e-001, 3.269784e-003, -1.264404e-001, -7.664525e-002, 9.819657e-002, 4.813825e-002, -5.776966e-002, -1.514041e-001, 1.889465e-001, 1.160278e-001, -5.241722e-002, -4.611668e-002, 4.473503e-002, 1.593018e-002, 1.080623e-002, 1.422667e-002, -1.005561e-001, 1.022565e-001, 2.174569e-001, -2.142691e-001, -6.013983e-002, -1.375370e-001, -1.078566e-001, 1.678465e-001, -1.865975e-002, 1.149383e-002, 7.761383e-003, 7.113340e-003, -1.487169e-002, 1.940164e-002, -4.656048e-002, -5.562786e-002, 4.199621e-002, -7.498268e-002, -5.457992e-002, 1.787400e-001, -6.650789e-002, 6.296721e-002, -2.390563e-002, -1.309835e-001, -2.988386e-002, -4.723379e-002, -3.333095e-002, 4.205442e-002, 4.987845e-003, 5.124274e-002, 2.552667e-002, 2.791033e-002, 2.191107e-002, -1.262323e-002, 1.123798e-002, -1.364728e-001, -1.017867e-002, 4.048301e-002, -1.319265e-001, 7.170540e-002, 5.038816e-002, 2.710745e-002, -1.912315e-002, -8.756742e-004, 2.895631e-002, -4.333497e-002, 3.266920e-002, -1.772244e-002, -8.498828e-002, -2.447108e-004, 3.462187e-002, -4.724035e-004, 4.689965e-002, -9.038101e-003, -2.307714e-002, 6.150105e-002, -1.940722e-002, 3.258990e-002, -2.436141e-002, -3.947612e-002, -2.301828e-002, 4.964974e-002, -4.292002e-002, -7.803626e-003, -2.694612e-002, -1.191716e-002, 5.763166e-002, 1.203431e-002, -9.360250e-002, 2.930394e-002, -6.936148e-002, 4.120253e-002, -2.326851e-002, -5.899656e-002, -6.358257e-002, 8.104261e-003, 1.125590e-002, 4.080459e-003, 2.390738e-002, 6.286347e-003, -1.436079e-002, -3.771236e-002, 3.164670e-002, -1.020372e-001, -3.047811e-002, 2.144268e-017, -4.462098e-003, 1.342664e-002, -1.606009e-002, -6.425919e-003, 1.191894e-002, -2.553075e-002, 4.245736e-002, 4.362625e-002, -4.245736e-002, 2.553075e-002, -1.191894e-002, 6.425919e-003, 1.606009e-002, -1.342664e-002, 4.462098e-003, -1.956705e-002, -3.636891e-003, 7.347559e-002, -1.253012e-001, 1.764122e-002, -1.433177e-002, -3.759166e-002, 1.347748e-002, -1.796811e-002, 7.291666e-002, -3.102333e-002, -7.899865e-002, 9.147260e-002, 1.086412e-002, -3.056347e-002, 3.796681e-003, 1.020355e-001, 5.891079e-002, -1.901768e-002, -4.840283e-002, -3.846519e-002, 4.397861e-002, 2.927667e-002, -6.724363e-002, -1.056623e-001, -3.567035e-002, -1.080958e-002, 5.023276e-002, 1.938581e-002, -5.195273e-002, -5.460130e-002, 2.676715e-002, -4.919359e-002, -1.525901e-001, 1.254977e-001, 7.026027e-002, -1.033665e-001, 3.225877e-002, 9.397312e-003, -7.026217e-003, 3.914893e-002, -9.502862e-003, 1.447235e-002, 1.647474e-001, -1.271433e-001, 1.464751e-001, 1.098924e-002, -6.013858e-004, 1.326376e-001, -5.034921e-002, -1.571157e-004, -3.246524e-002, 1.153467e-002, 1.062062e-002, -4.275188e-002, 9.277796e-003, 4.379249e-002, -3.146997e-003, 8.140961e-003, -2.190232e-002, 2.434326e-002, -1.497263e-002, -1.275812e-001, 3.116734e-002, -1.117486e-002, 3.882503e-002, 9.498960e-002, -8.864243e-002, 1.861498e-003, 4.957098e-002, 4.251787e-003, -4.770425e-002, -3.233316e-002, 2.601378e-003, 8.619354e-004, -2.401930e-003, -1.414346e-002, -1.791362e-002, 1.156639e-002, 3.921305e-002, 1.342470e-001, 8.550576e-003, -5.088088e-002, 4.978441e-002, -4.364016e-002, 2.651500e-004, 1.374881e-002, 5.357165e-002, 5.133707e-002, 6.011900e-002, 2.428598e-002, 5.269140e-002, 1.918066e-002, 6.877628e-002, -1.585709e-001, -2.558286e-002, -6.193377e-002, 2.184169e-002, 5.370682e-002, -6.170689e-002, -2.421864e-002, 3.561899e-002, 2.831314e-002, 2.011125e-002, 2.090349e-002, 5.165553e-003, 1.459552e-002, 4.492593e-002, 1.025128e-003, -4.450890e-002, 3.156355e-002, 1.024631e-001},
{-1.143408e-002, 1.307553e-002, -1.212100e-002, -3.285948e-002, -2.363091e-002, 3.646270e-002, -3.003057e-002, 9.125962e-003, -4.681066e-002, 9.125962e-003, -3.003057e-002, 3.646270e-002, -2.363091e-002, -3.285948e-002, -1.212100e-002, 1.307553e-002, -4.238273e-004, 5.766600e-002, -3.248460e-002, -7.517305e-002, 7.222347e-002, 6.519881e-002, -3.301257e-002, -7.345553e-003, 5.568388e-003, -8.157862e-003, -1.138417e-001, 1.321190e-001, 2.798770e-002, -7.851086e-002, -8.999344e-003, 8.115060e-002, -6.029569e-002, 1.171914e-001, -1.607812e-001, 1.511609e-001, -1.823317e-002, -3.479120e-002, 1.187887e-002, 8.210236e-003, 4.945567e-002, 7.168011e-003, -1.726641e-002, -1.917997e-002, -2.017817e-002, 1.537087e-001, -3.343223e-002, -3.233278e-003, -2.445529e-002, 4.709330e-002, -6.681301e-002, 2.970908e-001, -9.335142e-002, -4.323088e-002, 7.140519e-002, 1.093095e-002, -7.317324e-003, -5.286937e-002, 8.353129e-002, -1.725961e-001, 4.482122e-002, 1.814175e-001, 1.278734e-002, -5.496299e-002, -6.362815e-002, 3.698634e-002, -1.637909e-002, -5.576498e-002, -4.484208e-002, 7.386765e-002, 3.370545e-002, 1.872716e-002, 1.461132e-002, 5.532331e-002, -5.508660e-002, 7.048583e-002, 6.533323e-002, -1.235833e-001, 3.875630e-002, 1.224550e-002, -1.558696e-001, 3.083723e-002, 5.428965e-003, 4.565803e-002, -4.010666e-002, -4.461325e-003, 2.211219e-002, 4.487657e-002, -3.525032e-002, -2.109504e-002, -1.502876e-002, -2.589679e-002, -1.320801e-002, 7.627435e-002, -3.179078e-002, -7.751002e-002, -1.030216e-001, 4.383029e-002, -9.783305e-002, 5.925053e-002, -5.306425e-002, -2.846805e-002, 3.500367e-002, 5.405795e-003,


© ISO/IEC 2004 — All rights reserved

Copyright International Organization for Standardization
Provided by IHS under license with ISO
No reproduction or networking permitted without license from IHS
Not for Resale

3.939210e-002, -6.601124e-004, 4.469423e-002, -5.322237e-002, -1.073729e-002, 1.279254e-002, -7.191503e-002, 2.280354e-002, -3.727869e-002, -9.233030e-003, 4.100219e-002, -7.838277e-002, -2.235268e-002, 2.009282e-002, -1.946352e-003, 3.168005e-002, 1.524493e-003, 3.041844e-002, -1.958136e-002, 4.585855e-003, 3.133467e-002, -6.778960e-002, 7.257657e-002, -3.359778e-002, 3.766268e-017, 8.754281e-004, -1.338324e-002, 4.760154e-003, -7.783181e-003, -7.597347e-003, 1.074347e-002, 9.549396e-003, 8.485879e-002, -9.549396e-003, -1.074347e-002, 7.597347e-003, 7.783181e-003, -4.760154e-003, 1.338324e-002, -8.754281e-004, 4.519138e-004, 2.097464e-002, 2.645208e-002, 1.247291e-001, -8.229383e-002, -5.226440e-002, -8.264150e-002, 1.970324e-002, -6.240890e-003, 6.726629e-002, -8.058211e-002, -1.247857e-001, 1.436255e-002, 1.393987e-001, 9.940249e-002, -1.723378e-001, -1.820499e-001, 1.175168e-001, -1.674371e-002, 2.471936e-002, -4.555382e-002, 7.857596e-003, 2.759484e-002, -2.162084e-002, -1.419491e-002, 2.555914e-002, 3.441490e-003, -8.359265e-002, -1.499130e-002, 5.679421e-002, 8.192162e-002, -1.264861e-001, 5.241894e-003, 3.782488e-002, 5.506815e-002, -8.737867e-002, 1.693368e-001, -1.079917e-002, 1.879094e-002, -4.808884e-002, -3.852533e-003, -2.783177e-002, 3.274728e-002, 1.377260e-002, 1.357208e-001, -2.368955e-001, 5.663007e-002, -8.769834e-002, -4.844508e-005, 7.897056e-002, -3.451995e-002, -5.228926e-002, -2.488840e-002, 6.727516e-002, -8.517598e-002, -3.533315e-003, -2.835105e-002, 5.059131e-003, -7.647734e-002, 2.711296e-002, 5.234652e-002, -1.838484e-002, 7.059242e-003, -4.538504e-002, -2.761964e-003, 1.329907e-002, -6.038042e-002, 1.930947e-002, 2.915658e-003, -4.516408e-003, 4.804397e-002, -5.349007e-002, 3.409962e-002, -3.796859e-002, 4.039436e-002, 1.568418e-002, -4.051199e-002, -5.148311e-002, -4.031996e-002, 4.890543e-003, 4.170209e-002, -6.245163e-002, 1.347068e-001, -1.227348e-001, -1.217714e-002, 2.887223e-002, -8.638451e-003, 4.129192e-002, 6.955182e-003, 3.745285e-002, 1.815680e-002, 9.964069e-003, 2.801732e-002, -4.910800e-002, 9.349298e-002, -1.418762e-002, 7.865953e-002, -3.579725e-002, 2.004031e-003, -2.397511e-002, 1.361156e-002, 5.070843e-002, 6.329700e-003, -1.452536e-002, -2.423714e-002, -2.310870e-002, -4.164574e-004, 3.206881e-003, 6.046523e-002, -3.682699e-002, 3.373277e-002, -4.119792e-002},
{-2.145633e-003, -1.342845e-002, 4.409349e-002, -7.378739e-003, -2.571260e-002, -1.289090e-002, 3.393333e-002, 2.324835e-004, -2.768481e-002, 2.324835e-004, 3.393333e-002, -1.289090e-002, -2.571260e-002, -7.378739e-003, 4.409349e-002, -1.342845e-002, 7.531056e-002, -5.382752e-002, 7.160460e-002, 6.338942e-002, -9.691336e-002, -2.212178e-002, -1.080137e-003, 5.289719e-002, 5.396226e-002, 2.028110e-002, -3.605099e-003, -4.408938e-002, -1.369096e-001, 1.864500e-002, 9.083640e-002, 1.872520e-002, -1.580251e-001, 1.405912e-002, -1.507008e-002, -4.464638e-003, 6.285527e-002, 1.095882e-001, 1.003468e-002, -1.206103e-001, -5.041234e-002, -7.201580e-003, -8.299451e-005, 1.008419e-001, 5.830659e-003, 6.022036e-002, 2.333154e-002, 4.075159e-002, 4.260239e-002, 1.899513e-002, -9.899149e-002, -2.082105e-002, 3.991859e-003, -7.458002e-003, 2.845516e-002, 4.065367e-002, 4.568469e-002, -2.690352e-002, -6.692744e-002, 1.971144e-003, 1.180678e-002, -6.518171e-002, -1.815215e-002, 5.525808e-002, -5.338738e-002, -2.375805e-002, 3.921884e-002, -1.137550e-001, 6.540078e-002, 4.701759e-003, -3.623482e-002, 2.230125e-002, 3.985687e-002, 6.152183e-002, 8.707694e-002, -8.081630e-002, 1.051446e-001, 2.628565e-002, 1.657564e-001, -1.784176e-001, 3.434185e-002, -5.013764e-002, 7.154343e-002, -1.259815e-001, -1.122128e-001, 8.423295e-002, 5.465307e-002, -8.067578e-002, 1.304221e-002, 8.901066e-003, -3.293243e-002, 8.114478e-002, 5.372454e-003, -1.576718e-001, 7.289062e-002, -3.686156e-002, 5.023807e-002, 3.323005e-003, -4.286528e-002, 2.872944e-002, 4.009077e-002, -2.968720e-002, -1.538177e-002, 4.475251e-003, -3.466012e-003, -4.250085e-003, -2.290157e-002, 6.094910e-003, 8.444985e-003, 1.271312e-002, 4.863651e-002, -1.118363e-001, 2.965298e-002, 8.306612e-002, 3.474313e-002, -2.338470e-002, -7.984359e-003, -9.715861e-004, -2.429611e-002, 1.390130e-002, 1.580148e-002, 3.747898e-002, 2.641217e-003, 3.724744e-002, -5.187343e-002, -4.061241e-002, 8.914006e-002, 4.517549e-002, -6.696214e-017, 4.986940e-003, -4.181481e-003, -1.222559e-002, 2.476296e-002, -2.924368e-003, -2.589824e-002, 4.093217e-002, 4.107751e-002, -4.093217e-002, 2.589824e-002, 2.924368e-003, -2.476296e-002, 1.222559e-002, 4.181481e-003, -4.986940e-003, 4.075373e-003, 6.060090e-002, -9.859069e-002, -1.076217e-001, 2.464326e-002, 8.898912e-002, 3.137627e-002, -6.323531e-002, -6.034568e-002, 8.605875e-003, 1.387742e-002, -1.308016e-002, 1.450358e-002, -7.715229e-002, -5.486409e-002, 7.369755e-002, -9.620689e-002, 5.404643e-002, 2.489776e-002, -6.419502e-002, 1.148204e-001, -6.431814e-002, -1.209573e-002, 6.224853e-002, -3.331652e-002, -4.442584e-002, -3.662345e-002, -5.798272e-002, 1.788766e-001, -4.671053e-002, 1.046851e-002, -6.355090e-002, 7.190804e-003, -1.395012e-001, -5.462438e-002, 7.301951e-002, 3.412001e-002, -1.583809e-001, -2.485778e-003, -1.532814e-003, 4.859084e-002, 1.359924e-002, -2.652949e-003, -6.212087e-002, 8.310027e-002, 1.254452e-001, 3.372219e-002, -2.125021e-001, 2.487507e-001, -7.046485e-004, 2.777784e-002, 1.000882e-001, -9.640685e-002, 1.049922e-001, 3.744808e-002, 2.974508e-002, 3.236518e-002, -5.049893e-003, 6.140733e-002, 5.199416e-002, -1.007177e-001, -2.675012e-002, -8.912552e-002, -7.701548e-002, -4.699601e-002, -9.327315e-002, 3.182898e-002, 3.011507e-002, 1.819017e-002, 1.179849e-002, -4.092644e-002, 2.165312e-003, -3.089221e-002, 5.814154e-002, -8.676856e-002, -2.680702e-002, 6.914222e-002, -7.133835e-002, -1.263800e-001, -3.399504e-002, -1.161679e-002, 4.625837e-004, -4.544086e-002, 2.950386e-002, 1.015885e-002, -8.461749e-002, 3.332025e-002, -3.255651e-002,

© ISO/IEC 2004 — All rights reserved


Copyright International Organization for Standardization
Provided by IHS under license with ISO
No reproduction or networking permitted without license from IHS
Not for Resale

8.906589e-002, -3.021539e-002, 8.094175e-002, -5.189740e-002, -7.003186e-002, 6.253492e-002, -7.434640e-002, -4.292733e-002, 1.013156e-002, -6.950923e-003, -6.195002e-002, -4.179450e-002, -3.257758e-002, 2.962028e-002, -6.886969e-003, 1.963026e-002, -1.709603e-002, 5.495824e-002, 1.557959e-002, -5.006634e-003, 6.315968e-002, 2.871796e-002, -1.851011e-001, 7.031617e-002},
{-4.505261e-003, -2.089802e-002, 3.642107e-002, 2.492075e-003, 3.737254e-002, -2.527281e-002, -4.352636e-003, -3.144530e-002, 3.348648e-002, -3.144530e-002, -4.352636e-003, -2.527281e-002, 3.737254e-002, 2.492075e-003, 3.642107e-002, -2.089802e-002, 6.336742e-002, 1.139583e-002, 4.707236e-002, -3.862301e-002, 3.804279e-002, -6.370782e-002, 9.566684e-002, -5.221247e-002, -1.422506e-002, 2.591848e-002, 5.374864e-002, -5.560609e-002, 1.119619e-001, -7.892166e-002, 1.117733e-002, 5.206723e-003, 4.753520e-002, 1.293793e-001, 1.847139e-002, -1.365297e-001, -6.760277e-002, 8.102627e-002, -2.099494e-002, 2.576619e-002, 3.779529e-002, 4.735590e-002, -6.184892e-002, 1.139642e-001, -1.092415e-002, -2.106451e-001, 4.427157e-002, 1.932510e-001, -1.060265e-001, 9.648991e-002, -3.129012e-003, -8.500472e-002, 1.230476e-001, 3.855889e-002, -5.752611e-002, -5.219304e-002, 1.195968e-002, -6.593859e-002, -5.027303e-002, 7.411436e-002, 1.237803e-001, -1.874439e-001, -6.995162e-002, 6.713464e-003, -8.831953e-002, 1.473250e-001, -1.261425e-001, -4.052779e-003, 8.965080e-002, -1.322735e-002, 2.572816e-002, -3.619138e-002, -5.097483e-002, -1.755956e-002, -1.997527e-002, -4.097361e-002, 1.033591e-001, 7.558236e-002, -6.607127e-003, 7.865102e-002, 1.468581e-002, 2.344045e-002, -1.339990e-002, 1.984931e-002, -6.799252e-002, -5.047854e-002, -2.447075e-002, -3.535182e-002, 1.848553e-002, 1.492140e-002, -4.707804e-002, -5.218048e-002, -4.527827e-002, 1.100897e-001, -8.425369e-002, -2.890928e-002, -2.595993e-001, 4.048511e-002, 5.600510e-002, -1.825726e-002, 1.724145e-002, -2.067833e-002, 5.719340e-003, -3.340525e-002, 3.501090e-002, -3.290650e-002, 6.775108e-002, -4.176697e-002, -2.915446e-002, 1.749975e-002, 1.218624e-001, -5.056386e-002, -3.858431e-002, -6.136174e-002, 3.645086e-003, -1.248367e-002, 6.073947e-002, -7.850037e-002, -8.930077e-003, 1.590147e-002, -3.907376e-002, 3.912817e-002, 9.495043e-003, -2.623596e-002, 4.201342e-002, 8.374394e-002, -5.961179e-002, -5.922389e-002, -2.978520e-016, 1.164503e-002, -2.052267e-003, -4.117298e-003, 1.377957e-002, -3.084963e-002, 1.560228e-002, -5.513638e-003, -5.406281e-002, 5.513638e-003, -1.560228e-002, 3.084963e-002, -1.377957e-002, 4.117298e-003, 2.052267e-003, -1.164503e-002, -4.765793e-002, 3.736761e-002, 3.942673e-002, -5.272252e-002, 7.916309e-002, -1.071608e-002, -8.203469e-002, 4.608764e-002, -7.808807e-003, 1.015316e-003, -3.638374e-002, 7.829063e-002, 9.211750e-002, -1.041360e-001, -4.818627e-002, 5.337646e-002, 3.233293e-002, -1.087689e-001, 6.076849e-002, -4.922293e-002, -6.606476e-002, 1.256759e-001, 4.445989e-002, -2.593168e-002, 3.479119e-002, 3.217096e-002, -2.661245e-002, 4.580896e-002, -9.246340e-002, -1.703230e-002, 9.670576e-002, -3.529263e-002, -8.718877e-002, 1.137647e-001, 7.221100e-002, 1.704817e-002, 1.831404e-003, -2.110660e-002, 2.372370e-002, -2.609575e-002, 1.146287e-002, -1.917715e-003, 6.001931e-002, -2.145549e-002, -1.696664e-001, 2.989505e-002, 1.983357e-002, 1.938458e-002, 3.973082e-003, -7.622915e-002, -2.071254e-002, 1.156582e-001, -2.289208e-002, 2.200720e-002, -6.862361e-002, 3.505583e-003, 5.741660e-002, 7.366693e-003, -7.067704e-002, 1.156594e-001, -5.764893e-002, 1.729006e-001, -7.193592e-003, -4.946182e-002, 1.134302e-001, -2.151740e-002, 9.111678e-002, -2.709098e-002, -1.554324e-002, 3.298177e-002, -2.001197e-002, -4.131382e-002, -6.258077e-002, 2.287197e-002, -3.887074e-002, 2.881739e-002, -7.141697e-002, -6.194264e-002, 1.941168e-002, 1.560419e-002, 6.780412e-003, -3.979286e-002, -3.645600e-002, -7.979022e-003, 1.020149e-001, -8.546488e-003, -1.221517e-002, 8.687266e-003, 1.615155e-002, -4.175029e-002, 5.718533e-002, -2.442418e-002, 1.607642e-001, -3.291927e-002, -1.902599e-002, -4.866958e-002, 7.190895e-002, -3.285795e-002, 9.307747e-002, 2.571132e-002, -1.263123e-001, -2.052231e-002, 1.506862e-002, -1.863918e-002, 1.053740e-002, 1.596745e-002, -9.086169e-003, 1.535287e-002, -7.756588e-002, 4.286404e-002, 4.154884e-002, -1.798702e-002},
{5.313500e-003, 2.002006e-002, -4.952162e-003, 8.371214e-003, -3.864892e-002, 2.496242e-002, 3.853183e-002, -2.243021e-002, -2.148714e-002, -2.243021e-002, 3.853183e-002, 2.496242e-002, -3.864892e-002, 8.371214e-003, -4.952162e-003, 2.002006e-002, -2.511869e-002, -1.256103e-001, 8.173441e-002, 5.116088e-003, 4.493366e-002, 1.762317e-002, 1.801600e-002, 8.929937e-004, 1.016769e-002, -1.202284e-002, -8.292558e-003, 5.951548e-002, -7.021371e-002, -1.608927e-002, 1.200773e-001, 1.558780e-001, 2.723491e-002, -3.681909e-002, 6.044085e-002, -2.991319e-002, 3.718981e-002, -1.841773e-002, -4.359169e-002, 6.351802e-002, -3.358007e-002, 6.562972e-002, -6.934431e-002, 6.154927e-002, -7.646105e-002, 1.203222e-001, 4.496432e-002, -8.222448e-003, 1.147464e-001, -9.259463e-002, -1.069023e-002, 6.171590e-003, -9.053060e-002, -3.790166e-002, 4.271148e-002, -3.459821e-002, 4.332014e-002, -9.060215e-002, 5.492208e-002, 4.714573e-002, 4.176752e-002, -1.077472e-001, 7.546207e-002, -1.056719e-001, 1.478711e-001, -1.118425e-001, -7.260136e-002, -7.406468e-002, 6.022876e-002, 4.216502e-002, 1.928493e-002, 3.127808e-002, -1.595943e-003, 6.208338e-002, 4.781610e-003, 7.631672e-002, 2.626918e-002, 3.214345e-003, -9.566552e-002, -5.811937e-002, 2.678701e-002, -6.975251e-002, 1.079628e-001, -8.757741e-002, 6.586291e-003, -5.282772e-002, -7.631694e-003, -4.363810e-002, -1.728184e-002, -3.860032e-003, -5.298890e-002, 6.015375e-002, -6.813953e-003, -1.163943e-001, 4.149438e-002, -1.118571e-001, 8.468356e-002, 1.801657e-002, -7.222278e-002, 4.702253e-002, 3.341400e-002, -3.022216e-003, -4.589458e-002, -1.628856e-002,


© ISO/IEC 2004 — All rights reserved

Copyright International Organization for Standardization
Provided by IHS under license with ISO
No reproduction or networking permitted without license from IHS
Not for Resale

1.640613e-002, -5.343279e-002, 9.325123e-003, -6.237906e-003, 1.814814e-002, 2.688980e-003, 4.469426e-002, -8.783862e-002, 4.301821e-003, -1.559241e-002, 4.303483e-002, 2.040468e-002, -8.703984e-002, -3.419344e-002, 1.042754e-002, 6.369207e-003, 1.524036e-002, 4.094758e-002, 3.194884e-002, -2.521017e-002, -6.442529e-002, -5.374589e-003, 3.884171e-002, -4.098202e-002, -1.768922e-017, -8.512177e-003, -8.233985e-003, 2.181229e-002, 3.223020e-002, -7.581212e-002, 1.910517e-002, 8.410226e-003, 1.829206e-002, -8.410226e-003, -1.910517e-002, 7.581212e-002, -3.223020e-002, -2.181229e-002, 8.233985e-003, 8.512177e-003, 3.612764e-002, -7.399942e-002, 7.072770e-002, -8.771867e-002, 1.670111e-001, -7.147092e-003, -6.511797e-002, -1.574552e-002, -3.003151e-002, 4.185420e-002, -6.314129e-002, -3.114324e-002, 5.557668e-002, -8.108837e-002, 1.054483e-001, 2.901909e-002, -7.433598e-002, -1.368022e-001, 5.561385e-002, 4.687942e-002, -1.949915e-002, -2.828458e-002, 5.322246e-002, -2.008919e-002, 2.115035e-002, -1.135974e-002, 1.060820e-001, -1.588058e-002, 9.691763e-003, 1.138542e-001, 1.979524e-002, -6.725441e-002, -3.035364e-002, 2.381925e-001, -6.361790e-003, -2.291733e-001, 5.398948e-002, 8.333666e-002, 3.110357e-002, 2.741589e-002, -1.533732e-003, -2.485436e-002, -3.862888e-004, 4.977881e-002, -5.953433e-004, -8.529058e-002, -1.843779e-001, -4.170768e-002, 1.965899e-001, 1.594807e-001, -8.674043e-002, 5.267715e-003, 5.027810e-002, -8.357219e-003, -2.761788e-002, 3.818142e-002, -2.791149e-002, 2.963231e-002, -1.909312e-002, -2.420684e-004, -2.440586e-002, -4.813322e-002, -1.425384e-001, -1.394721e-001, -4.670898e-002, 1.563289e-001, 1.633234e-002, 7.636099e-002, 1.982913e-002, 8.000873e-003, -3.218128e-002, -7.444732e-002, 1.863058e-003, -3.742509e-002, -6.943070e-002, 2.451786e-002, 7.674067e-003, 7.182694e-002, -4.325400e-002, 1.606395e-002, -2.810374e-002, 9.730771e-002, -8.192340e-002, 1.641811e-002, -6.056736e-002, -2.830404e-002, 7.479442e-003, 9.171283e-003, 4.738874e-002, 3.461307e-003, 1.961460e-002, 9.765898e-003, -9.423722e-002, 2.316606e-002, -7.545935e-002, 5.752036e-002, -4.899003e-002, 7.916516e-002, -7.771542e-002, -1.162752e-003, -5.305573e-002, -1.689037e-002, 1.439099e-003, -8.329361e-003, -4.382189e-003, 7.406518e-003, 3.503241e-002, -7.742766e-003, 1.336633e-002, 2.389018e-002, -1.592221e-001, -1.662864e-002},
{-2.465787e-003, 3.364075e-002, -7.225110e-003, -6.304670e-002, 9.501904e-003, 1.178896e-001, -8.317189e-002, 3.187646e-003, -3.170553e-002, 3.187646e-003, -8.317189e-002, 1.178896e-001, 9.501904e-003, -6.304670e-002, -7.225110e-003, 3.364075e-002, -5.178155e-002, -2.665928e-002, 1.520072e-001, 1.841236e-002, -1.636768e-001, -1.979592e-003, -3.846077e-002, 1.180440e-001, 3.252553e-002, 3.348717e-002, 3.074720e-002, -5.111862e-002, -8.438978e-002, -7.358851e-003, 1.466771e-001, -9.928712e-003, 4.274214e-002, 7.651379e-002, 1.708300e-002, -2.498251e-002, -2.753434e-002, -6.785794e-002, 7.482222e-002, -1.286970e-001, -4.478412e-002, -5.360911e-002, 6.622694e-002, -1.061151e-001, 7.813315e-002, -1.292113e-002, -5.878684e-002, 6.151507e-002, -8.696530e-002, -1.067300e-001, 3.288673e-002, 1.019778e-002, 4.873269e-002, -3.078141e-002, -3.661130e-002, 7.079300e-003, -5.219409e-002, 1.963336e-002, -1.384990e-002, 2.906279e-002, -3.491123e-003, 8.358206e-003, 4.830510e-002, -6.791446e-002, 4.441369e-002, 7.982062e-002, 6.160857e-002, -6.364099e-002, 1.175889e-001, 8.631385e-002, -1.398403e-002, 5.294875e-002, 4.314575e-002, -6.114898e-003, -8.019217e-002, 9.021167e-002, -4.171245e-004, -3.388717e-003, -2.108748e-002, 4.651869e-002, 5.003796e-002, -4.471106e-002, -2.993375e-002, 3.477915e-002, -7.389747e-003, 7.344767e-002, -3.162447e-002, -1.317787e-002, 3.064516e-003, 2.138269e-002, 5.394356e-002, -7.443610e-002, 6.074675e-003, 1.122914e-001, -9.010269e-002, 3.501763e-002, 3.650700e-002, 5.238136e-002, 2.128850e-002, 8.845964e-003, -4.082129e-002, -8.622818e-003, 6.562639e-002, -1.875536e-002, 3.394827e-002, -4.307362e-002, 6.533370e-002, 3.821873e-002, -1.268369e-002, -4.065780e-002, 5.982108e-002, 3.338123e-002, 4.864941e-002, -1.574715e-002, 1.152372e-002, -6.072103e-002, 8.460411e-002, 2.146531e-002, -8.434653e-003, 2.428352e-002, -2.084309e-002, 3.233331e-002, -4.878840e-002, 8.234051e-003, 7.939865e-002, -4.739645e-002, 1.911185e-002, -2.450770e-002, -1.500406e-016, -1.106046e-003, 2.380371e-002, -2.581478e-002, 3.573300e-003, 2.564055e-002, 2.268424e-003, -2.604878e-002, 3.380345e-002, 2.604878e-002, -2.268424e-003, -2.564055e-002, -3.573300e-003, 2.581478e-002, -2.380371e-002, 1.106046e-003, 2.283419e-003, -1.145780e-001, -1.822319e-002, 3.999579e-002, 1.867374e-001, -1.149545e-001, -1.336115e-002, 1.602493e-002, 2.367638e-002, -1.365692e-002, -2.066254e-002, -1.410007e-001, 1.701646e-001, 8.486327e-002, -6.496325e-002, -3.804250e-002, 8.506490e-003, 9.999951e-002, -1.235958e-001, -2.036008e-001, 1.682376e-001, 2.697629e-002, 8.510576e-002, 7.081900e-002, -1.009577e-001, 6.583769e-002, 5.352125e-002, 7.588369e-004, 1.585358e-001, -1.521663e-001, -1.484122e-001, 6.083486e-002, -2.037366e-002, 9.115419e-002, -7.632056e-003, -6.234350e-002, -1.087774e-001, 5.891335e-002, -2.380501e-002, -3.295085e-002, -1.646024e-002, -9.703802e-002, 1.037465e-002, 6.969403e-002, -1.029353e-001, -5.688538e-002, 4.383672e-002, 1.101432e-001, -1.096830e-002, 6.484525e-003, 3.137912e-002, -7.485731e-002, -5.613191e-002, 1.278187e-002, 1.713412e-002, -1.000254e-002, -8.358096e-003, 4.483907e-002, 3.123044e-002, 3.618093e-002, -8.181084e-002, -3.665843e-002, 7.373539e-003, 6.038337e-002, -5.697842e-002, 4.368468e-002, -1.289997e-001, 3.374982e-002, 2.545129e-002, -8.858927e-002, 2.337145e-002, 1.806033e-002, -6.854993e-002, -3.807845e-002, 6.325465e-002, -8.594192e-002, -4.012134e-003, -5.006909e-002, -3.133930e-002, -2.173264e-002, 8.874139e-003, 5.107699e-002, 1.441897e-002, -3.247169e-002, 1.598940e-002, 6.685224e-002, -1.276069e-002, -1.690124e-002,

© ISO/IEC 2004 — All rights reserved


Copyright International Organization for Standardization
Provided by IHS under license with ISO
No reproduction or networking permitted without license from IHS
Not for Resale

2.103434e-002, -7.071896e-003, -1.247028e-001, 8.378684e-002, 5.272777e-002, -1.233970e-001, 2.277185e-002, -5.286354e-004, -1.401821e-001, -1.560592e-003, -2.360555e-002, 6.574410e-002, 3.346996e-002, 2.012889e-002, -1.761813e-002, -6.745851e-003, 1.215818e-002, -5.794450e-002, 1.959201e-002, 1.012398e-002, -5.991902e-002, 9.573212e-002, 1.679071e-002, -1.219085e-004},
{-1.004218e-002, 2.700062e-002, -4.039746e-002, -5.452333e-002, 2.526392e-002, 8.216185e-002, -6.049864e-002, -3.736536e-002, 4.407379e-002, -3.736536e-002, -6.049864e-002, 8.216185e-002, 2.526392e-002, -5.452333e-002, -4.039746e-002, 2.700062e-002, 5.266844e-002, 1.336942e-001, 5.735273e-002, -9.066112e-002, -1.660493e-001, 1.153657e-001, 1.052687e-001, -4.982863e-003, -7.380902e-002, 5.417387e-002, 6.937264e-003, 2.599823e-002, -1.135637e-001, -5.573080e-002, -9.201966e-003, 1.282912e-001, -2.732472e-002, -1.143953e-001, 2.686505e-002, 1.489081e-002, 5.539259e-002, -4.815034e-002, -8.207095e-004, 2.930465e-003, 3.670379e-004, -2.748974e-002, -3.152444e-002, -1.062703e-001, 1.414551e-001, 3.338190e-002, -2.522050e-002, -2.062310e-002, 4.458416e-004, 4.501693e-002, 7.237962e-002, 1.413514e-002, 2.342380e-002, -3.824145e-003, -3.383186e-002, 2.825176e-002, 3.165252e-002, 2.855025e-002, 3.075247e-002, -8.603644e-002, 1.417797e-002, 6.177410e-002, -7.389582e-003, 1.162493e-001, 7.984789e-002, 2.471526e-001, -1.420490e-001, 2.123138e-002, -7.954002e-002, -1.980653e-002, 6.463962e-002, -3.653834e-002, -4.905117e-002, -2.277048e-002, -1.628544e-002, -3.008464e-002, -1.473844e-002, -2.316412e-003, -1.019108e-001, 5.551560e-002, 8.698442e-003, 1.354556e-001, 4.161239e-002, 3.365627e-002, -1.075780e-001, 8.486222e-002, -5.119786e-003, 2.056662e-002, 1.759188e-002, 3.323168e-002, -4.758987e-002, 8.900573e-002, -6.556960e-002, -2.698415e-002, 9.193086e-002, 5.291597e-002, -7.548974e-002, 4.555639e-002, 1.074456e-001, -7.573993e-002, 3.573142e-002, -4.032561e-002, -2.390120e-002, 2.095734e-002, 2.348495e-002, -2.484647e-002, 6.304438e-002, -1.828458e-002, -1.729890e-002, -3.441194e-002, 1.885899e-001, -2.387834e-002, 2.727504e-002, 6.391064e-002, -4.521308e-002, -7.106771e-003, 4.565749e-003, 1.091982e-002, 1.627531e-002, -2.715147e-002, -3.652590e-002, -1.051150e-002, -2.485932e-002, -1.147389e-002, 1.003735e-001, -4.222338e-002, 2.897160e-002, -1.368015e-002, 7.917509e-017, 4.916221e-003, 1.220915e-002, -2.153411e-002, -1.711172e-002, 2.615198e-002, -1.923023e-003, -5.538382e-002, -2.851118e-002, 5.538382e-002, 1.923023e-003, -2.615198e-002, 1.711172e-002, 2.153411e-002, -1.220915e-002, -4.916221e-003, 1.071583e-002, 7.060429e-002, -9.045035e-002, 8.512122e-003, 2.200327e-002, -7.344617e-003, 2.173951e-002, -4.928936e-002, 1.004177e-001, -2.618817e-002, 2.577259e-003, -1.020260e-001, 1.371271e-001, 3.899568e-002, -2.042239e-001, 2.984844e-002, -3.238253e-002, 7.009808e-002, -2.826287e-002, 2.028684e-002, 1.809347e-002, -4.596275e-002, -8.676652e-002, 3.491483e-002, 2.628746e-003, 6.164789e-002, -9.983537e-002, -1.275650e-001, 6.202695e-002, 6.808297e-002, -5.228375e-003, 1.032988e-001, 9.406987e-002, 1.630994e-002, -9.126593e-002, 5.595123e-002, 1.865436e-002, 6.580120e-002, 2.252114e-002, -1.071113e-002, -4.344169e-002, 1.619986e-002, 5.748953e-002, -3.573597e-002, 6.164274e-002, 8.790123e-002, -8.492568e-002, -1.120851e-001, -1.097124e-001, -1.249469e-002, 4.405836e-002, -5.563971e-002, 4.399932e-003, -2.584649e-002, 8.916972e-003, -7.548792e-002, 3.121894e-002, -4.281345e-002, -7.642435e-002, -2.137446e-002, 2.598140e-002, -3.756753e-002, 9.004162e-002, -7.459402e-002, 1.822372e-002, -1.488933e-001, 9.359285e-002, -1.465034e-001, 3.924137e-002, -2.396823e-002, -4.830434e-002, 5.066449e-002, -9.895739e-003, 6.008689e-002, 3.720316e-003, -3.142399e-002, -3.476303e-002, -7.743441e-002, 4.324448e-002, -1.215188e-001, -8.411931e-002, -1.389773e-001, 4.649679e-003, 2.754529e-002, 6.900973e-003, -3.988838e-002, -1.107053e-002, -2.454960e-002, -8.857772e-003, -2.010288e-002, -1.080434e-002, -1.835682e-002, -1.773302e-002, 7.751575e-002, -1.715907e-002, -1.061640e-001, 6.020660e-002, -1.817776e-002, 3.314408e-002, -1.235128e-001, 3.252702e-002, 3.870680e-002, -2.162594e-002, 3.157385e-002, 9.978428e-003, -7.828248e-004, -2.285686e-002, -1.029666e-002, 2.064620e-002, -9.055733e-002, -1.271689e-002, -1.161111e-002},
{-2.567781e-004, 1.268131e-002, -2.542552e-002, 2.859755e-002, 5.646456e-002, -2.398449e-002, 3.225823e-002, -2.667293e-002, 5.554780e-002, -2.667293e-002, 3.225823e-002, -2.398449e-002, 5.646456e-002, 2.859755e-002, -2.542552e-002, 1.268131e-002, -9.233674e-003, -5.449265e-002, 4.158568e-003, -2.301066e-003, -4.203151e-002, -1.849761e-002, -2.799239e-003, 2.392806e-002, 4.328538e-002, 5.877525e-002, -4.398560e-003, -3.652641e-002, 6.002142e-002, -5.792728e-002, -5.963891e-003, 9.561872e-004, -1.725713e-001, 3.731345e-002, -3.128095e-002, 7.061136e-002, 8.091157e-003, -1.173833e-001, -4.629809e-002, -4.905793e-002, 5.476576e-003, 3.617913e-002, -4.568683e-002, -2.771307e-002, -8.258314e-002, 6.244628e-002, 1.243609e-002, -4.457269e-002, 5.088257e-002, 2.002367e-002, -4.018411e-002, 2.017190e-002, 4.283299e-003, 7.132803e-003, 1.207517e-002, -9.415429e-002, 5.211234e-003, -5.307643e-002, 5.035575e-002, 6.638912e-002, -3.171870e-002, -1.058276e-001, 1.305684e-001, -1.852718e-002, -1.595276e-001, -1.491455e-002, -9.945479e-002, 3.282007e-002, 6.226527e-003, 7.983472e-002, -7.969367e-002, 7.628687e-003, -9.066781e-003, 1.102217e-002, 3.716862e-002, -1.138678e-001, 4.189061e-002, 6.013687e-002, -5.017761e-002, 4.533392e-002, -1.211141e-001, 8.323903e-002, 4.001648e-002, -4.116481e-002, 3.265275e-002, -3.193995e-002, 1.757261e-002, -6.421928e-002, -1.037075e-002, 1.337271e-002, -6.282167e-002, -6.384256e-002, 4.974291e-002, -8.915500e-002, 3.220546e-002, -1.101545e-002, 2.922688e-002, -2.415462e-002, 3.363025e-003, 9.016721e-002, -3.800160e-002, 1.363009e-002, 1.899906e-002, -2.037917e-002, -


© ISO/IEC 2004 — All rights reserved

Copyright International Organization for Standardization
Provided by IHS under license with ISO
No reproduction or networking permitted without license from IHS
Not for Resale

6.235937e-003, -2.194011e-002, 6.570878e-003, 4.925180e-002, -1.425652e-001, 5.494042e-002, -1.401328e-002, 3.141161e-002, -1.280474e-002, 2.885680e-002, 4.616745e-002, -1.010728e-001, 1.498108e-002, 9.666437e-003, -6.399777e-002, 3.727694e-002, 1.026708e-002, 3.036027e-002, -2.096946e-002, -5.543958e-002, 4.614669e-002, -7.537318e-002, -3.409095e-002, 5.995999e-002, 7.324427e-017, -1.002434e-002, 1.525978e-003, 1.561553e-002, 2.385440e-002, -5.283295e-003, -1.425255e-002, 5.422324e-002, 2.790647e-002, -5.422324e-002, 1.425255e-002, 5.283295e-003, -2.385440e-002, -1.561553e-002, -1.525978e-003, 1.002434e-002, 5.257250e-002, -3.425505e-002, -1.459314e-002, -1.200055e-001, 3.908361e-002, 6.398516e-002, 9.050982e-002, -4.826118e-003, -6.493422e-002, 5.961277e-002, 5.756034e-002, -4.150358e-002, -6.502153e-002, -3.821054e-002, 6.624214e-002, -2.023872e-002, 6.572022e-004, -6.341670e-002, 1.636806e-001, -5.093356e-002, -7.543247e-002, -8.539748e-003, -2.669988e-003, 2.962506e-002, -3.017456e-003, -1.174446e-002, -5.584710e-003, 8.269084e-002, 8.071303e-002, -2.644159e-001, 2.154639e-001, -1.307748e-002, -1.994441e-001, 1.487135e-001, -1.434832e-001, 6.719500e-002, -1.081808e-002, 2.849637e-002, 1.381854e-002, 2.183604e-002, -1.077664e-002, -3.492169e-002, -7.896175e-002, 4.326224e-002, -8.034857e-003, 4.656908e-003, -1.060984e-001, 1.527054e-001, -1.114138e-001, -1.517770e-001, 6.378099e-002, 1.123518e-001, -6.723717e-002, -1.096647e-001, 8.657990e-003, 4.367762e-002, 2.488940e-002, 4.350875e-002, 1.891647e-002, -6.300856e-002, 3.185146e-002, 5.288691e-002, 6.216437e-002, -7.323669e-002, 2.959750e-002, -1.006668e-001, 1.360797e-001, 5.108132e-002, -1.489734e-002, 2.895018e-002, 4.024080e-003, -3.525899e-002, 2.303949e-004, -1.301700e-002, 2.725457e-002, 1.255828e-002, -6.950432e-002, 1.122461e-001, 6.391612e-002, -7.445339e-002, -2.945544e-002, -3.161447e-002, 1.093546e-001, -5.402940e-002, -1.258246e-001, 8.284291e-002, -4.105525e-003, -3.991799e-002, 3.800711e-002, 1.282260e-002, -1.826405e-003, 8.058082e-002, -1.290863e-001, 2.209361e-002, 1.045882e-001, -5.125975e-002, -8.664727e-002, 1.637699e-002, 6.211683e-002, -7.846105e-002, 4.402286e-002, -1.801287e-002, 1.388733e-002, 1.019068e-002, -1.778395e-002, 1.994445e-002, 1.605079e-002, -6.770200e-002, 8.069191e-002, -5.335187e-002, 1.898252e-002, -7.272928e-003},
{2.603660e-003, 1.466272e-002, -3.524929e-002, 1.057668e-001, -9.051460e-002, 5.866550e-002, -2.598581e-002, 2.334466e-002, 8.334225e-002, 2.334466e-002, -2.598581e-002, 5.866550e-002, -9.051460e-002, 1.057668e-001, -3.524929e-002, 1.466272e-002, -2.040935e-002, -7.643245e-002, -9.654057e-002, 1.332502e-001, -8.377654e-002, 1.017050e-001, -6.409013e-002, -4.263289e-002, -3.394191e-002, 6.830867e-002, -5.237701e-002, 4.203103e-002, -2.678519e-003, 1.545803e-001, -1.448067e-001, -3.737978e-002, 1.513735e-002, 2.682389e-003, -1.017136e-002, 1.357813e-001, -5.464758e-002, -6.395339e-002, 7.153705e-002, -2.900749e-002, 1.950986e-002, -8.381484e-002, 4.978450e-002, -1.448532e-001, 8.355661e-002, 3.518539e-003, -3.041281e-002, 1.449517e-001, -8.361218e-002, -9.524101e-002, -6.536237e-002, 5.561763e-002, -1.233779e-003, 4.949407e-002, 2.578655e-002, 6.603044e-002, -7.316895e-003, 1.102460e-001, -1.179497e-004, -5.637922e-003, 9.010300e-002, 1.863917e-002, -9.439565e-002, -5.911543e-002, 5.274807e-002, 1.116221e-001, 4.423179e-002, 5.546901e-002, 1.636986e-002, -1.053861e-001, -2.300764e-003, 9.451008e-003, -7.744578e-003, 3.617291e-002, 1.624178e-002, -7.077889e-002, 8.831559e-002, 3.630995e-002, 6.137011e-003, 5.552823e-002, -6.813340e-003, -8.769407e-003, -5.592376e-002, 2.926075e-002, -1.431566e-001, 1.134096e-001, -7.382081e-003, 2.544125e-002, 8.087600e-002, -2.495209e-002, 3.135487e-002, 6.150987e-002, -2.011134e-002, -2.849472e-002, -9.984930e-002, -3.336166e-002, -7.937196e-002, 1.201064e-002, 1.537027e-002, -4.066986e-002, 1.586169e-002, -1.926992e-002, 4.263175e-003, 1.306649e-002, -3.929772e-002, 2.956430e-002, 9.820607e-003, -3.415437e-002, 1.976416e-002, -2.210249e-002, 5.080364e-002, -3.226439e-002, 1.137705e-001, 8.708562e-002, -4.382555e-002, -4.867086e-002, 1.365273e-002, 2.956541e-002, 1.950152e-002, -1.301320e-002, -7.398681e-003, -8.462420e-003, -3.154271e-002, 3.316454e-002, 6.068848e-003, -8.716339e-002, 4.058823e-002, 4.447241e-004, 8.672001e-017, 1.925079e-003, 1.961531e-002, 6.763346e-003, -6.094902e-002, 3.808122e-002, 3.321058e-002, -2.087303e-002, -3.849014e-002, 2.087303e-002, -3.321058e-002, -3.808122e-002, 6.094902e-002, -6.763346e-003, -1.961531e-002, -1.925079e-003, -1.251985e-002, 4.530548e-002, 6.152662e-002, -4.609919e-002, 1.023212e-001, 7.302669e-003, -6.973921e-002, 3.467334e-002, 2.310704e-002, 7.131401e-002, -1.461181e-002, -8.426612e-002, 2.066834e-001, -1.247185e-001, -4.768060e-002, 1.933436e-002, -2.928261e-002, -2.326885e-002, -7.241240e-002, -7.115390e-002, 2.082155e-002, -2.858362e-002, 4.160182e-003, -1.141493e-001, 2.382502e-002, -7.747441e-002, -1.109549e-002, -3.146513e-002, 7.275995e-002, -3.878859e-002, -4.632385e-002, -6.647212e-003, 1.435708e-001, 1.580070e-001, 8.700997e-002, -1.530784e-002, -5.870221e-002, 4.886471e-002, -5.271640e-002, 3.360643e-002, -7.962952e-002, -3.794827e-003, -4.354487e-002, -4.633975e-002, 8.026643e-002, -1.166386e-001, 7.990009e-002, 5.393110e-002, -5.678021e-002, -2.334522e-002, 8.362898e-002, 1.325620e-001, -4.235789e-002, 5.142162e-002, 1.385983e-001, 2.707332e-002, 3.730281e-002, 5.593234e-003, 4.433948e-002, 1.654229e-002, -7.814352e-002, 1.159521e-001, 1.112720e-001, -1.072977e-001, -6.013930e-002, -4.225431e-002, 5.233541e-003, -8.578154e-002, 1.166466e-001, 4.117839e-003, 1.801593e-002, 6.173410e-002, 2.731490e-002, 5.872183e-002, 9.973030e-003, -3.728019e-002, 7.960799e-002, -6.017473e-002, 6.457413e-002, -1.892807e-001, 6.682084e-002, -1.786907e-002, 2.507968e-002, -2.844786e-002, 9.769568e-002, -2.497371e-003, 4.628070e-003, -1.948404e-002,

© ISO/IEC 2004 — All rights reserved


Copyright International Organization for Standardization
Provided by IHS under license with ISO
No reproduction or networking permitted without license from IHS
Not for Resale

5.879094e-003, -3.076044e-002, 4.346770e-002, -5.223546e-002, 7.311128e-002, -5.300232e-002, 7.005290e-002, -7.910658e-002, -4.533052e-002, 4.666268e-003, 2.989730e-002, -2.768447e-002, 1.706440e-002, 6.024174e-002, -3.429211e-002, 3.972179e-002, -1.245287e-002, 2.942620e-002, -5.284900e-002, 4.105393e-002, 2.188065e-002, -3.101124e-002, 5.463753e-003, -2.424429e-002},
{1.723407e-003, 1.878253e-002, -3.110220e-002, -9.128546e-003, 3.578144e-002, 3.384680e-002, -6.284532e-002, -1.348363e-002, 3.863471e-002, -1.348363e-002, -6.284532e-002, 3.384680e-002, 3.578144e-002, -9.128546e-003, -3.110220e-002, 1.878253e-002, 4.698478e-002, -3.926109e-002, 1.704099e-002, 1.536324e-001, -1.077275e-001, -5.216851e-002, 6.536652e-002, -4.950026e-002, -6.188148e-002, -1.390438e-002, 1.963343e-002, -2.589261e-002, -4.647400e-002, 1.076364e-001, -1.580430e-002, -3.737669e-003, -3.209312e-002, -1.055388e-001, -7.480915e-002, 1.147199e-001, -1.294187e-001, 8.042415e-002, -1.261093e-002, 3.146633e-002, 9.908942e-003, 9.614394e-002, 1.335249e-002, 6.502389e-002, -1.773329e-001, 2.566136e-001, -1.118158e-001, -1.779822e-001, 7.179893e-002, -1.405082e-002, -1.564959e-003, -7.564029e-002, -3.146385e-002, 7.287980e-002, -6.374852e-002, -8.663131e-002, 1.012062e-002, -7.067743e-002, 1.845328e-002, 1.740697e-002, 1.988721e-002, -1.873010e-001, 2.878112e-003, 3.722462e-002, 3.786752e-002, -1.435402e-002, -4.097560e-002, -7.117639e-002, 1.157636e-001, -4.099176e-003, 4.476400e-003, -4.471104e-002, -4.818181e-002, 1.034075e-002, 2.077825e-002, -2.191735e-002, 1.319645e-001, -1.680172e-002, 6.171719e-002, 2.960093e-002, 2.348549e-002, -7.154053e-003, -1.043560e-001, -3.673383e-003, -3.829356e-002, 2.140024e-002, -4.979587e-002, 1.499252e-002, 1.849294e-002, 3.174804e-002, -5.865037e-002, -3.063536e-002, -3.726481e-002, -4.791565e-002, -1.883657e-001, 1.431568e-002, -2.038356e-002, 2.634990e-002, 4.786603e-002, 1.799046e-003, 1.504938e-002, -4.267474e-002, 3.472153e-002, -2.260381e-002, 1.564506e-002, -2.358849e-002, 2.155464e-002, 1.322052e-002, 1.169554e-002, -6.956608e-002, -1.268290e-002, 2.076489e-002, 1.563964e-001, -4.437734e-002, -2.042621e-002, -6.317770e-002, 3.424489e-002, -2.667582e-002, -1.995980e-002, 3.347746e-002, -2.603688e-002, 1.660949e-002, 1.922134e-002, 1.844105e-002, -1.000844e-002, -1.746895e-002, -6.337780e-002, 7.043484e-002, -2.422039e-017, -1.394120e-003, -1.072149e-002, 1.808008e-002, -1.431422e-002, 1.020104e-002, 5.196884e-003, -1.884307e-002, -1.855620e-002, 1.884307e-002, -5.196884e-003, -1.020104e-002, 1.431422e-002, -1.808008e-002, 1.072149e-002, 1.394120e-003, -3.415040e-002, 5.750964e-002, -1.060291e-001, -7.198806e-002, 3.272564e-002, 2.991689e-002, -1.377101e-002, -2.435712e-002, -8.248151e-003, 3.018056e-002, -3.757704e-002, -3.397305e-003, 8.205477e-002, -1.182591e-001, 9.287543e-003, -1.530342e-002, 2.762244e-002, -4.425723e-002, 5.153866e-002, 1.180109e-001, -8.474224e-002, -8.231350e-003, 4.717473e-002, 4.036332e-002, 3.672056e-003, 2.173445e-003, 3.562623e-002, -6.047599e-002, 5.803548e-002, 7.901985e-002, -7.093786e-003, -3.906716e-002, 1.515342e-001, 1.272396e-003, 6.065627e-002, -1.652782e-001, 1.268564e-001, -1.418124e-002, 6.202554e-003, -4.156704e-002, -4.762664e-002, -5.780925e-002, 5.771528e-002, 3.959354e-002, 8.872410e-002, -1.419632e-001, -3.933063e-002, -1.203933e-001, -9.966835e-002, 8.017732e-002, 6.553271e-002, -5.576806e-002, -3.450532e-002, 1.028371e-002, -6.487421e-002, 2.512005e-002, 1.918348e-002, 1.196020e-002, 1.439490e-002, -1.061308e-002, -1.204792e-002, 1.052054e-002, 3.399829e-002, 6.982255e-002, 2.076499e-001, 7.344644e-002, -9.558344e-002, -6.579699e-002, 2.447927e-002, 3.780781e-002, -3.880661e-002, -5.786138e-003, -2.788126e-002, 1.849029e-002, -6.398912e-002, 3.148886e-002, 1.269750e-002, -1.537603e-001, -1.501932e-001, 2.785940e-002, 8.182002e-003, -5.620494e-002, 9.267956e-002, -1.311050e-001, -3.251577e-003, 4.018820e-002, -1.835818e-002, -6.351727e-002, 1.786971e-003, -3.908458e-002, 1.718709e-003, 4.449708e-002, 5.941542e-002, -1.472247e-001, 9.932477e-002, 1.461598e-002, -9.264151e-003, -6.171090e-002, -1.916971e-002, -2.655193e-002, 8.750820e-003, -3.904829e-002, 1.149273e-002, 8.878683e-003, 3.185958e-003, -2.906866e-003, 1.320467e-002, -4.137924e-002, 1.153222e-002, 1.550701e-002, -2.686026e-002, -1.238716e-002},
{3.689023e-003, 8.663457e-003, 1.822157e-002, 8.828625e-003, -8.819252e-003, -7.894773e-002, 9.397560e-002, 3.698093e-002, -9.174987e-002, 3.698093e-002, 9.397560e-002, -7.894773e-002, -8.819252e-003, 8.828625e-003, 1.822157e-002, 8.663457e-003, -1.064242e-002, -4.551856e-002, 1.202830e-001, -2.736505e-002, -5.075267e-002, 6.977525e-003, 1.292801e-001, -3.445458e-002, 3.942748e-002, -3.283681e-002, -2.605999e-002, -3.782413e-003, -1.252179e-003, -1.409357e-003, 2.325523e-002, -1.135766e-001, -6.028808e-002, -2.955602e-002, 6.146973e-002, -1.220703e-001, 1.953155e-002, -3.896075e-002, -6.207534e-002, 7.370118e-002, 3.110032e-003, 1.575950e-003, -4.299738e-002, -9.013772e-002, 6.678787e-002, 1.066530e-001, -8.644478e-003, -9.983714e-003, 6.651009e-002, 3.812004e-002, 8.013589e-002, 5.774778e-002, 8.276714e-003, 2.085984e-002, -3.755424e-002, -9.126837e-003, 4.489195e-003, -4.624538e-002, -6.334791e-002, 9.829548e-002, 3.666144e-002, 5.075208e-002, -1.210580e-001, -1.707525e-001, 4.898141e-002, -6.761710e-002, 3.553614e-002, -4.787178e-002, -1.049735e-001, 1.427776e-002, 2.739568e-002, -2.988235e-002, 1.740443e-002, 2.623143e-002, 3.460848e-002, -1.684405e-001, -3.613015e-002, 6.814041e-002, 5.538694e-002, 1.413313e-001, 1.651487e-001, 1.044003e-001, 9.247769e-002, -2.772478e-002, -8.070308e-002, -1.713094e-002, 3.079983e-002, -3.852337e-002, -6.172127e-003, 2.989834e-002, -3.090769e-002, 5.884775e-002, -6.313994e-002, 1.151913e-002, 4.654913e-002, 4.167767e-002, -3.701549e-003, -1.263866e-001, 4.947010e-002, 2.792294e-002, 1.393497e-002, -4.913612e-002, 1.409586e-002, -2.039798e-002, -


© ISO/IEC 2004 — All rights reserved
--`,,```,,,,````-`-`,,`,,`,`,,`---

Copyright International Organization for Standardization
Provided by IHS under license with ISO
No reproduction or networking permitted without license from IHS
Not for Resale

8.713373e-003, -2.733533e-002, 2.478939e-002, -4.862336e-002, 2.097591e-002, 8.695693e-002, -1.446669e-002, -1.384975e-002, -2.063872e-002, -3.633076e-002, 3.221954e-002, -4.302946e-002, -5.982722e-002, -1.325271e-002, -2.347233e-002, 5.723982e-002, 4.553570e-002, 2.234617e-002, -2.198823e-002, -2.926960e-002, -6.172944e-002, 3.686120e-002, -8.146637e-002, 1.385954e-001, -1.003124e-016, -1.286389e-002, 3.785711e-002, -2.036553e-002, -2.836913e-002, -2.655013e-002, 6.040780e-002, -2.350820e-004, 1.613445e-002, 2.350820e-004, -6.040780e-002, 2.655013e-002, 2.836913e-002, 2.036553e-002, -3.785711e-002, 1.286389e-002, 2.927653e-002, -3.373291e-002, 1.067567e-001, -1.124471e-001, 2.857282e-002, 2.445232e-003, 2.420484e-002, -2.437378e-002, -9.082084e-003, 1.881760e-002, -7.554600e-002, -2.809734e-002, 8.496780e-002, 1.297458e-001, -1.500591e-001, -1.664882e-001, -2.616516e-002, -9.805292e-002, 1.320608e-001, -1.213496e-002, -1.026449e-001, 2.542762e-002, -4.066626e-002, 4.499644e-004, 1.134281e-002, -5.806562e-002, 3.070529e-003, 2.657475e-002, -6.796978e-002, -6.778012e-003, 8.673908e-002, 8.815365e-002, 8.434318e-002, -6.947154e-002, 8.443191e-002, -1.001118e-001, 3.780847e-002, 2.137299e-002, -1.661587e-003, -2.482709e-002, 7.827353e-003, 1.146402e-001, 5.449724e-003, 5.845685e-002, -2.054616e-001, 1.296517e-001, -4.638197e-002, 1.113990e-001, 5.542114e-003, -6.679543e-002, 8.973635e-002, 1.849171e-002, 1.331971e-002, -2.135726e-002, -2.499298e-002, -2.397518e-003, 4.911387e-002, -5.558100e-002, 8.333944e-002, -6.946015e-002, 7.934875e-002, 6.887847e-002, 2.130358e-002, 8.041187e-002, -4.369413e-002, -7.477643e-002, 7.449322e-002, -2.494216e-002, 1.247415e-001, 9.390952e-003, -7.579696e-002, -3.217980e-002, -1.058249e-001, 2.205008e-002, -6.689949e-002, 6.826670e-002, 1.553386e-001, -1.342485e-002, -7.060404e-002, 7.609894e-002, -1.017423e-001, -4.071091e-002, -1.390566e-002, -1.438673e-002, -1.928420e-002, -9.894910e-003, 1.034660e-002, -2.760268e-002, 2.603581e-002, -2.311537e-002, 6.295027e-003, -6.164898e-002, -3.280259e-002, 1.004061e-001, -5.722713e-002, 6.417427e-002, 7.167216e-002, 4.491291e-002, 7.829734e-003, -5.405335e-002, 2.059035e-004, -3.862325e-003, 1.876454e-002, -6.420589e-003, -1.752134e-002, 2.479615e-002, 2.388183e-004, -2.086062e-002, 7.042214e-002, -9.865885e-002, -6.093451e-002, 8.264785e-002},
{-7.066931e-003, 2.769568e-002, -8.592207e-002, 6.271410e-002, 3.984401e-002, -7.242477e-002, -1.988497e-002, 8.033625e-003, 1.334035e-002, 8.033625e-003, -1.988497e-002, -7.242477e-002, 3.984401e-002, 6.271410e-002, -8.592207e-002, 2.769568e-002, -2.984030e-002, 1.919910e-002, 1.735962e-002, 9.200939e-002, -7.459221e-002, -5.376384e-002, 6.231758e-002, 6.970278e-002, 1.760172e-003, -2.825617e-002, 2.541502e-002, -7.610411e-002, -2.619252e-002, 1.104880e-001, 1.781387e-002, -3.506510e-002, -1.397488e-002, -2.997280e-002, 2.107864e-002, -5.186878e-002, -1.116525e-001, 1.330620e-001, -2.638401e-002, -7.183979e-002, -2.068686e-002, 2.031195e-004, -2.576940e-002, 1.514994e-001, 6.554767e-003, -1.104324e-001, -1.316887e-002, 2.581766e-002, 1.122081e-002, -8.447314e-002, 1.567069e-001, 4.237405e-003, -4.598545e-002, 2.448534e-002, 3.529630e-002, 6.746499e-002, -5.377770e-002, -8.212835e-002, 2.546329e-002, -1.934316e-002, 7.743178e-004, -9.567621e-002, -7.050928e-003, 3.168739e-002, -2.145189e-001, -6.244042e-002, -7.118962e-002, 1.565406e-001, 2.501888e-002, -3.018975e-002, -4.048604e-002, -1.474179e-002, 5.855773e-003, 6.310532e-002, -3.451668e-002, -1.015432e-001, 5.317478e-002, 1.237128e-001, 2.059243e-001, -1.703138e-001, -2.463091e-002, 9.507809e-002, -5.536563e-002, -2.850102e-002, -2.740487e-002, 4.325415e-002, 2.292325e-002, -1.562608e-002, 3.962639e-002, -2.099863e-002, 2.938432e-002, 3.870256e-002, 1.305984e-002, -8.627590e-002, -4.824046e-002, 2.197983e-001, -9.376696e-002, 5.874491e-002, -4.205815e-002, 6.596694e-003, -2.005882e-003, 2.200801e-002, -2.461128e-002, 3.112719e-002, -2.218166e-002, 2.291197e-002, -6.515438e-003, 4.838501e-003, -2.480204e-002, -4.094067e-002, 1.170497e-002, 4.990230e-002, 1.248510e-002, 2.025962e-002, -3.423774e-002, 4.248251e-002, 5.196570e-003, -3.775777e-002, 1.119416e-002, 1.754871e-003, 2.752666e-002, 1.774351e-002, 2.713471e-002, -6.785022e-002, 1.973553e-002, 3.436911e-002, 8.451887e-003, 5.831274e-003, 2.697372e-017, 1.501021e-002, -1.159693e-002, 5.421152e-003, -2.899527e-002, 1.336862e-002, 3.864028e-002, -4.704907e-002, 9.168266e-003, 4.704907e-002, -3.864028e-002, -1.336862e-002, 2.899527e-002, -5.421152e-003, 1.159693e-002, -1.501021e-002, 4.000658e-002, -3.932873e-002, -7.640010e-003, -3.394404e-002, -5.619127e-002, 1.280121e-001, -1.868191e-002, -7.912527e-002, -7.728737e-003, -4.158704e-002, -3.479432e-002, 6.458783e-002, 6.459420e-002, -1.495430e-001, 3.531272e-002, -2.597903e-002, -1.331395e-001, 7.340707e-002, 2.925214e-002, -4.940002e-002, 2.551147e-002, 4.428099e-002, 1.312563e-002, -4.456348e-003, -5.559673e-002, -4.386462e-002, 1.644698e-002, -8.516837e-002, 1.376994e-001, -7.420925e-002, 8.581313e-002, -3.158919e-002, 9.945681e-002, 1.803146e-001, 1.414578e-002, -4.250126e-002, -5.304443e-002, 1.880287e-002, 2.772312e-003, 2.686624e-002, 3.576180e-002, 4.258050e-002, -1.894806e-002, 4.096463e-003, -1.097700e-001, 4.639684e-002, 2.333153e-002, -7.321905e-002, -7.027685e-002, 1.201317e-001, -1.175584e-001, -6.522493e-002, 7.004556e-002, 6.589880e-002, -1.675960e-002, -4.555984e-002, -1.318876e-002, -1.207160e-002, 4.224305e-002, 4.278359e-002, 6.902729e-002, -1.818567e-001, -9.910811e-002, 7.994622e-002, -1.308531e-001, 7.611437e-002, 1.005181e-001, -5.942053e-002, -6.833734e-003, 2.272721e-002, -6.337349e-003, -3.915540e-002, -3.566888e-002, -3.894286e-002, 1.529056e-002, 1.141903e-001, -8.627677e-002, -4.076390e-002, 6.196473e-002, 2.831199e-002, 5.913896e-002, 4.651322e-002, -5.141172e-002, -3.581675e-002, 5.682596e-002, 4.459700e-003, -7.626355e-002, 5.113635e-003,

© ISO/IEC 2004 — All rights reserved
--`,,```,,,,````-`-`,,`,,`,`,,`---


Copyright International Organization for Standardization
Provided by IHS under license with ISO
No reproduction or networking permitted without license from IHS
Not for Resale

6.126936e-003, -1.270702e-002, 2.112240e-003, -3.607098e-002, 2.226288e-002, 1.317786e-002, 3.590701e-002, -9.472193e-002, -2.623451e-002, 1.701515e-002, 8.007763e-002, -6.136661e-002, -1.755216e-002, 3.825605e-002, -2.055387e-002, -3.599997e-002, -2.098711e-002, 1.489463e-002, -1.599131e-002, 1.889162e-002, 7.784887e-002, -1.045229e-001, 8.697158e-002, -2.576090e-002},
{2.259176e-003, -1.413083e-003, -4.169500e-003, -5.964293e-002, 3.355738e-002, -1.732076e-002, -1.772600e-003, 1.233391e-002, 5.718624e-002, 1.233391e-002, -1.772600e-003, -1.732076e-002, 3.355738e-002, -5.964293e-002, -4.169500e-003, -1.413083e-003, -4.589413e-003, -4.075732e-002, -2.857130e-003, -5.613147e-002, 1.718540e-001, -4.939342e-002, -8.394644e-002, 2.129603e-002, 4.802684e-002, 5.202854e-003, -1.044296e-001, -5.226989e-002, 1.450007e-001, -9.057190e-002, -1.201796e-001, 1.454643e-001, 5.388102e-003, -9.245432e-002, 1.433955e-001, -2.062395e-001, -9.395372e-002, 6.129596e-002, 6.762738e-002, 7.297766e-003, 3.421416e-002, -3.417572e-002, -8.736653e-003, 4.483634e-002, -2.139532e-002, 6.567645e-002, 2.229341e-002, 5.040171e-004, -4.826682e-002, 2.781610e-002, 9.726762e-002, -8.137580e-002, -3.441288e-002, -5.804328e-002, -5.455002e-002, 4.032254e-003, -3.022880e-002, -1.819441e-002, -1.543425e-002, -4.478207e-003, 7.696473e-003, -2.176707e-002, -5.609257e-002, 6.509044e-002, -2.016929e-001, -1.043768e-001, 1.475241e-001, -2.832404e-002, 2.065141e-002, -3.556252e-002, 2.595192e-002, -1.296725e-002, -3.743755e-002, 2.416343e-003, 3.731979e-002, -7.596252e-002, 5.729406e-003, 5.283895e-003, 1.128613e-001, -1.102175e-001, 1.009301e-001, 7.463593e-002, 6.679705e-002, -7.478908e-002, 2.124330e-003, -3.902455e-002, -4.416410e-002, -2.797903e-003, 2.371799e-002, 1.963665e-004, -6.328679e-002, -1.506402e-002, -7.622902e-002, -8.093064e-002, -1.787626e-003, -5.111492e-002, 6.098801e-002, 6.918576e-002, -1.896444e-002, 1.272966e-003, 3.613306e-002, -3.169095e-003, 1.996038e-002, 2.201822e-002, -1.154731e-002, 1.763419e-002, 5.143961e-002, 1.739102e-002, -1.518648e-003, -6.107094e-002, -6.863785e-002, -7.835831e-003, -1.610825e-001, 6.624071e-002, 9.115343e-002, -3.029810e-002, -4.913112e-002, 4.781143e-002, 3.381094e-002, 4.840251e-004, 8.740270e-003, 5.802389e-003, 2.768848e-002, 4.196559e-002, -1.241693e-002, -3.749715e-002, 7.351961e-002, -2.606399e-002, -5.924871e-017, -1.722537e-002, 2.297481e-002, -2.526147e-002, -1.693383e-002, 3.409044e-002, 2.459039e-002, -1.895605e-002, 3.213697e-002, 1.895605e-002, -2.459039e-002, -3.409044e-002, 1.693383e-002, 2.526147e-002, -2.297481e-002, 1.722537e-002, -4.636126e-002, 1.466935e-001, 7.283508e-003, -1.416006e-001, -3.893436e-002, -2.478513e-002, -1.989638e-002, 3.334574e-002, 7.219454e-002, 5.735564e-002, -5.561418e-002, -3.965356e-002, -9.876964e-003, 8.092156e-002, -1.125898e-001, -1.805138e-002, 1.318885e-001, 5.351334e-002, 2.643424e-002, 7.247768e-002, -1.524068e-001, 1.060168e-001, -8.290827e-003, -4.250932e-002, 7.884170e-002, -3.089992e-002, -3.929400e-002, -1.402565e-002, -9.294684e-002, 1.090232e-001, -4.272693e-002, -1.490387e-002, -1.115052e-001, 2.262515e-001, -3.300794e-002, -1.224698e-001, 3.543799e-002, 6.960950e-002, -9.646448e-003, 1.741031e-002, -2.216511e-002, 3.671565e-002, -5.986729e-002, 5.786985e-003, -5.562478e-002, 1.223817e-002, -7.208013e-002, -1.533845e-001, -2.058424e-002, 2.766651e-003, 1.289941e-001, -4.337880e-002, -3.965148e-002, 5.400620e-002, 2.270856e-002, -4.668045e-002, -6.035163e-003, -5.166268e-002, 1.668556e-002, -3.338986e-003, -1.027535e-001, 4.563178e-003, 1.395688e-001, -2.039303e-001, -3.106794e-002, 1.151374e-001, 7.481726e-002, 1.197647e-001, 3.151702e-002, -4.251819e-002, -3.660156e-002, 2.100429e-003, -3.719268e-002, 4.161892e-003, -2.240413e-002, -1.280561e-002, 1.057135e-002, 1.866781e-003, 2.839755e-002, -1.469678e-002, -8.427509e-002, 4.329759e-002, 3.107593e-002, -2.563648e-002, 1.875880e-002, -9.395598e-004, 1.768696e-002, -1.593543e-002, -1.886800e-002, -3.907175e-002, 2.624319e-002, 1.051412e-002, -2.291092e-002, 4.450726e-003, 6.875332e-003, -1.985230e-002, -3.032083e-002, 5.117262e-002, -2.594197e-002, 4.090743e-002, 2.176124e-002, -1.425731e-002, -5.668053e-002, -3.291058e-002, -2.105405e-002, -6.891889e-003, -5.241305e-002, -4.153535e-002, 4.223531e-002, 5.230600e-002, -3.348124e-002, -5.506910e-002},
{9.233287e-004, -6.262597e-003, 3.746701e-002, -6.113029e-002, -1.923071e-002, 3.255709e-002, 3.306312e-002, -2.957294e-002, -2.119240e-002, -2.957294e-002, 3.306312e-002, 3.255709e-002, -1.923071e-002, -6.113029e-002, 3.746701e-002, -6.262597e-003, 9.838020e-003, 6.642965e-002, 6.761132e-002, -1.506060e-001, 1.081900e-001, 1.331770e-001, -1.008737e-001, 9.769946e-003, 3.588085e-002, 3.852288e-002, -1.130233e-001, -1.980439e-002, 2.007873e-001, -1.774273e-001, 5.992283e-002, -3.608216e-002, -9.668354e-002, -1.486462e-001, 7.823727e-002, 3.257185e-002, -8.270296e-002, 5.681324e-002, 8.631323e-002, -6.848308e-002, -4.515162e-002, -1.015523e-001, 1.308102e-002, 1.074087e-001, -3.628377e-002, -4.366726e-002, 1.606340e-001, -6.467543e-002, 2.049823e-002, -3.858286e-002, 4.449055e-002, 7.832888e-002, 5.029708e-002, -7.253013e-002, 8.328089e-003, -4.323549e-003, -1.676541e-002, 1.570215e-003, -5.341329e-002, -9.210213e-002, 8.864021e-002, -2.008304e-002, 3.036058e-002, 2.821400e-002, 1.133975e-001, -1.137979e-001, -1.644343e-002, 5.887905e-002, 5.387494e-002, 2.589798e-002, -5.276390e-002, 9.728499e-002, 8.930538e-003, 5.878912e-002, 3.178278e-002, 1.638084e-002, 4.792949e-002, 2.391144e-002, 1.007660e-001, -1.724289e-001, -5.740632e-002, 8.501353e-002, -1.060906e-001, 1.334335e-002, -1.115621e-001, 1.236888e-001, 5.543882e-002, -7.996444e-002, 3.845666e-002, -5.535096e-002, 4.254111e-002, 3.299515e-003, -2.027442e-003, -3.157604e-002, -6.660589e-002, -9.939471e-002, -1.418754e-001, -2.824808e-002, 3.072533e-003, 6.601832e-002, 1.091680e-002, -4.384619e-002, 2.633677e-002, -6.293544e-003, -


© ISO/IEC 2004 — All rights reserved

Copyright International Organization for Standardization
Provided by IHS under license with ISO
No reproduction or networking permitted without license from IHS
Not for Resale

2.190007e-002, 5.863606e-002, -2.909055e-004, -3.129832e-002, 5.017243e-002, -4.257520e-003, -2.216342e-002, 2.879153e-003, 1.339449e-001, 5.335145e-002, -6.176880e-002, -8.246373e-003, 5.029001e-002, 2.304885e-002, -1.168661e-002, 2.318630e-002, -3.461953e-002, 1.147704e-002, -3.979774e-004, 6.805209e-002, 8.586368e-002, -2.504697e-002, -1.003145e-001, -3.576994e-003, 6.181846e-017, 6.335411e-003, -2.878804e-003, 1.780806e-002, -3.385287e-002, 1.547683e-002, -2.601264e-002, -2.993256e-003, -5.316619e-002, 2.993256e-003, 2.601264e-002, -1.547683e-002, 3.385287e-002, -1.780806e-002, 2.878804e-003, -6.335411e-003, 4.915119e-002, 2.632896e-002, -1.306543e-002, 2.014697e-002, -1.320558e-002, 1.045673e-002, -1.178073e-001, 7.518937e-002, -2.423592e-002, 6.217862e-003, -3.839790e-002, -4.977636e-002, 5.339046e-002, -1.262603e-002, 2.586091e-002, -3.599256e-003, 4.883736e-002, -1.093371e-001, 4.807142e-002, -7.725193e-002, -3.756926e-002, -2.480080e-002, 7.081680e-002, 8.702870e-003, 6.665406e-002, -2.332205e-002, 4.111729e-003, -2.740459e-002, 4.614727e-002, -1.050372e-001, 4.291494e-002, 7.634438e-002, -1.041821e-001, -4.921575e-002, 1.219804e-001, 8.793668e-002, 2.470658e-002, -2.697845e-002, -5.035205e-002, 6.808521e-002, -6.044742e-003, 3.432888e-002, -8.925106e-002, 2.695056e-002, 3.895678e-002, -2.521772e-002, 1.229417e-001, -9.015039e-002, 3.126613e-002, 1.148485e-001, -6.727985e-002, 7.678273e-002, -8.050217e-002, 2.429376e-002, 1.083071e-001, 2.602665e-002, -3.017887e-003, -2.775647e-002, 7.759413e-002, 4.243693e-002, -6.003347e-002, 3.925955e-002, 2.239531e-002, 3.745211e-002, -1.690765e-001, 6.633036e-002, -9.674098e-002, 1.333958e-002, 3.766940e-002, -4.843524e-002, -5.973113e-002, 2.166678e-002, 2.740120e-002, 3.074520e-002, 7.051026e-003, -1.198028e-001, 8.625365e-002, -1.426519e-003, -1.679724e-001, 3.272932e-002, 2.902916e-002, 8.147169e-003, 8.253152e-002, -3.251396e-002, 2.329427e-002, -7.849494e-003, 2.746173e-002, -1.307953e-002, -1.497096e-002, 2.980750e-003, 2.726363e-002, 3.154535e-002, 1.193803e-001, -7.669256e-002, 5.906134e-002, -1.068213e-002, -1.810686e-002, 7.565772e-002, 1.956711e-002, 1.813792e-002, -6.578220e-002, 3.453026e-002, 2.065965e-002, 1.543495e-002, -1.995571e-002, -2.562514e-003, -1.657193e-002, 2.124138e-002, -3.465819e-002, 2.931210e-002, 7.292653e-002, -5.123490e-002},
{3.150145e-003, 5.337160e-003, -3.085890e-002, 4.352025e-003, 2.755108e-002, -4.718871e-002, 7.578058e-002, -3.234672e-002, -1.337970e-001, -3.234672e-002, 7.578058e-002, -4.718871e-002, 2.755108e-002, 4.352025e-003, -3.085890e-002, 5.337160e-003, 3.540269e-002, 4.978874e-003, -3.369765e-002, 2.051632e-002, -9.278285e-003, 1.755021e-002, 1.785437e-002, -1.127330e-003, -4.881288e-003, -7.070271e-002, 2.417728e-002, 1.870894e-002, 2.337795e-002, -6.224207e-002, 2.142334e-002, -4.415454e-002, 7.107232e-002, -3.780574e-002, -8.382735e-003, 4.374175e-002, 6.615385e-002, -3.969870e-002, -5.482267e-002, 5.116514e-003, -1.976127e-002, -3.359959e-002, -2.829677e-002, 1.914869e-002, 3.647518e-002, -1.562837e-001, 5.025725e-002, 8.659925e-002, -3.770980e-002, -2.098721e-001, 2.528211e-003, 3.920242e-002, 5.112062e-002, -4.516271e-002, -3.680787e-004, -9.682610e-003, -3.015171e-002, 5.182145e-002, -3.081036e-003, 3.890895e-002, -5.093502e-002, 2.854170e-002, 1.382499e-002, -6.625315e-002, -2.174434e-002, 2.512203e-001, -1.395714e-001, -9.958062e-002, 3.102576e-002, 7.725009e-002, -5.248134e-002, 3.159144e-002, 1.080958e-001, -9.299263e-003, -3.250183e-002, 4.663711e-002, 4.305336e-002, -7.280130e-002, -3.172657e-002, -1.147409e-001, 7.879458e-003, 9.304832e-002, -3.533032e-002, 2.237556e-002, 2.662266e-003, -1.747589e-002, 7.136862e-002, -7.193707e-002, -5.522481e-002, 4.955770e-003, 2.567730e-002, -3.613300e-002, 2.501817e-004, -4.124015e-002, 1.088300e-002, 7.148105e-003, 1.776501e-001, -3.140889e-002, 3.730642e-003, 2.402838e-002, 4.988539e-003, -1.430161e-002, -2.700033e-002, -1.362605e-002, 1.062646e-002, -3.159041e-002, -7.926605e-004, 5.510328e-003, -1.063160e-002, 5.068513e-003, 5.819361e-002, -1.393835e-001, -7.119834e-004, 2.990473e-002, 3.199537e-002, -1.148791e-001, 2.389161e-003, 4.052526e-003, -5.811591e-002, 1.583884e-002, 2.145730e-002, 4.415876e-002, -3.942340e-002, 1.940273e-003, -2.239080e-002, -7.011744e-002, 7.588509e-002, -7.225708e-002, -1.466974e-016, 2.370466e-002, -2.383895e-002, 1.029788e-002, 1.009615e-002, -3.096350e-002, 1.398779e-002, 4.368034e-003, 7.091545e-002, -4.368034e-003, -1.398779e-002, 3.096350e-002, -1.009615e-002, -1.029788e-002, 2.383895e-002, -2.370466e-002, -3.477158e-002, -9.160220e-002, -4.157304e-003, 3.908652e-002, -4.321940e-002, 1.019993e-001, 1.100818e-002, -7.381765e-002, -9.496468e-003, -3.295774e-002, -2.875812e-002, 1.122669e-001, 1.149767e-002, -5.706350e-002, 1.613435e-002, -1.527087e-002, 7.069802e-002, 8.496768e-002, 5.374769e-002, -1.378644e-001, -1.067588e-001, -1.976508e-002, 1.441738e-002, 1.934385e-002, -3.996606e-002, 5.122895e-002, 4.860366e-002, -7.329683e-002, -6.099885e-002, -1.690893e-001, -1.821227e-002, 6.786679e-002, 9.027127e-002, 5.888122e-003, -1.215651e-001, 5.955324e-002, 2.051070e-002, 1.532192e-002, 3.714939e-002, 4.781813e-003, 1.110900e-001, -4.369790e-002, 7.772143e-002, 3.121765e-002, -5.364491e-002, 8.858761e-002, 6.999486e-002, -1.001486e-001, -6.211918e-002, 1.411605e-001, -2.615156e-002, 8.048916e-002, -1.191400e-002, -7.278850e-002, -3.648776e-002, 3.679218e-002, -5.972291e-002, 5.732446e-002, -6.923743e-002, 2.341931e-002, -1.014086e-001, 2.857443e-002, 1.257862e-001, 3.379233e-003, 2.404278e-001, -8.019542e-002, 1.383904e-002, 1.115180e-001, 5.601733e-002, 1.658529e-002, -2.589213e-003, -3.843827e-002, -1.347724e-002, 9.105520e-003, 2.941078e-002, -2.957989e-002, 1.352181e-001, -5.898456e-003, 4.720376e-002, 1.782132e-002, -6.385969e-002, 1.810809e-002, 5.902019e-002, 3.597196e-002, -7.823725e-002, -5.082128e-003, -1.803902e-002, -3.111918e-002,

© ISO/IEC 2004 — All rights reserved


Copyright International Organization for Standardization
Provided by IHS under license with ISO
No reproduction or networking permitted without license from IHS
Not for Resale

6.952117e-002, -1.263521e-002, -5.148021e-002, 5.516497e-002, -7.401258e-002, 1.874873e-003, 1.235770e-001, -7.125217e-002, 2.521880e-002, 5.446521e-002, -1.606531e-001, 9.552541e-002, -8.408799e-002, 5.288447e-003, 2.697476e-002, 1.925667e-002, -8.022177e-003, -9.407635e-005, 7.256241e-002, 1.670719e-002, -1.194847e-001, 1.445572e-001, -7.591610e-002, 2.593999e-003},
{1.099847e-003, 4.334537e-003, -3.614581e-002, 3.674884e-002, 5.769489e-004, 1.318406e-002, -2.161589e-002, 5.570175e-003, -4.033209e-002, 5.570175e-003, -2.161589e-002, 1.318406e-002, 5.769489e-004, 3.674884e-002, -3.614581e-002, 4.334537e-003, 2.860838e-002, -5.221132e-002, -3.347298e-002, -2.291271e-002, 2.786724e-002, 6.228086e-002, -3.255744e-002, -1.473152e-002, 1.934189e-002, -2.996559e-002, -3.102056e-002, 5.294258e-002, 3.283598e-002, 5.296624e-002, -4.355201e-002, 5.611184e-002, 2.511031e-002, 9.564983e-002, 8.300785e-002, -1.113028e-001, 5.981259e-002, 2.277688e-002, 4.167666e-002, -9.072410e-002, -1.593551e-003, -1.123119e-002, 4.689604e-002, -1.753715e-002, 4.992516e-002, 1.869315e-002, -3.876975e-002, -1.315876e-001, -2.349273e-002, 1.370987e-001, -1.459232e-001, -1.168154e-001, 1.176631e-001, 3.225928e-002, -1.143005e-002, -4.067514e-002, -4.046894e-002, -4.232085e-002, -2.417442e-002, 2.856396e-002, 1.429060e-001, -1.423287e-001, 4.387314e-002, 5.894428e-002, 6.073357e-002, -1.301586e-001, 5.690113e-002, 1.865053e-002, -3.209500e-002, 5.416862e-002, -2.182976e-003, 9.657830e-002, 2.676231e-002, 2.890690e-002, 5.643117e-002, 4.415896e-002, -7.083202e-002, -1.703457e-001, 7.625518e-002, 2.760821e-002, -1.206194e-001, -2.161960e-002, 2.862644e-002, 2.790181e-002, 7.296014e-002, -2.069561e-002, 4.241612e-002, 7.534682e-003, -4.782610e-002, 2.385475e-002, -1.249046e-002, -5.449978e-003, 8.814081e-002, -3.090004e-002, 2.178408e-002, 5.729266e-002, -6.392232e-003, 9.288468e-002, -1.008344e-001, 6.747036e-002, -1.399479e-002, -2.127493e-002, 2.298758e-003, 1.624813e-002, -7.399137e-003, -4.471982e-002, 6.247595e-002, -2.893930e-002, 2.109330e-002, 9.314280e-003, -1.111306e-001, 1.979513e-001, 5.571373e-002, -4.890321e-002, -4.915379e-002, -3.671134e-002, -2.089952e-003, 6.782473e-002, -5.678126e-002, 9.211342e-003, 6.599440e-003, 3.559457e-002, -8.300119e-002, 3.485588e-002, 6.731019e-002, -3.899972e-002, -1.767006e-002, 4.106289e-002, 5.862616e-017, -7.191914e-003, -7.005197e-004, -8.945551e-003, 3.229141e-002, -9.669011e-003, -4.006122e-003, -2.410617e-002, -7.357489e-003, 2.410617e-002, 4.006122e-003, 9.669011e-003, -3.229141e-002, 8.945551e-003, 7.005197e-004, 7.191914e-003, -3.674516e-002, 7.735216e-003, 7.894163e-003, -7.640203e-002, 1.045885e-001, -4.564548e-002, 4.325300e-003, -1.900099e-002, 4.713837e-002, -6.494105e-003, 4.867200e-002, -1.085145e-001, 5.785988e-002, -5.899201e-002, 3.761606e-002, 4.323336e-002, 7.318012e-002, 6.460630e-002, 5.198273e-002, -8.947814e-002, -1.349973e-002, -3.612462e-002, 3.380213e-002, 1.025609e-002, -2.047631e-002, 5.031022e-002, 3.420961e-003, -2.758194e-002, 1.264660e-001, -1.443592e-001, 4.597160e-003, 2.694201e-002, -4.874912e-002, -7.774508e-002, 3.563171e-004, 4.595757e-002, 6.334905e-002, 1.012111e-001, -1.224283e-001, 3.141762e-002, -2.980856e-003, 2.723893e-002, -7.839000e-002, 4.076767e-002, 3.239634e-002, -4.893112e-002, -1.056573e-001, -8.033550e-002, 7.093151e-002, 5.442482e-002, 7.565844e-002, -6.934326e-002, -1.483770e-001, 6.516090e-002, 1.029130e-001, -5.258586e-003, 7.352634e-002, -7.096546e-002, 7.745927e-002, 8.791126e-002, -4.649270e-002, -6.157646e-002, 3.925474e-002, 1.238062e-001, -1.099237e-001, 2.273787e-002, -8.602806e-003, 1.179943e-001, 8.655713e-002, -2.971458e-002, 5.806851e-002, -9.746887e-003, -9.240866e-002, -3.044003e-002, -1.151697e-003, -1.081933e-002, 1.043609e-001, 7.992566e-002, -5.710534e-002, 1.191869e-001, -2.272162e-002, -8.922924e-002, 7.754624e-002, -8.145904e-002, 7.032341e-004, -6.664013e-002, -1.601333e-002, 7.757317e-003, 2.115124e-002, -1.866668e-002, -6.464861e-002, -1.097130e-002, -4.974510e-002, -1.396954e-002, 9.536774e-002, -2.510695e-002, 1.253613e-001, -6.698547e-002, -1.343395e-001, -5.949251e-002, 1.629232e-001, -2.152279e-002, -4.200973e-002, 3.527491e-002, -1.380316e-003, 2.015762e-002, -1.397364e-002, -1.008142e-001, 1.482020e-001, -2.416876e-002, -6.019644e-002, -1.094427e-001},
{-1.943028e-003, 1.843060e-002, -4.407624e-002, 5.687739e-003, 6.296660e-002, 6.996199e-003, -4.372458e-002, -4.206309e-002, 8.370910e-002, -4.206309e-002, -4.372458e-002, 6.996199e-003, 6.296660e-002, 5.687739e-003, -4.407624e-002, 1.843060e-002, 8.229242e-003, 4.115988e-002, -1.186715e-001, 7.384403e-002, 1.066585e-001, -2.371968e-002, 2.676551e-003, 4.798480e-003, -6.288541e-002, -7.091054e-003, -1.723666e-002, -4.909123e-002, 1.438092e-001, 4.969916e-003, -1.084002e-001, 1.135950e-002, 2.976892e-002, -3.262539e-003, -9.432609e-005, -1.092475e-001, -6.005324e-002, 1.548615e-001, 2.763718e-002, -1.359411e-002, -8.494056e-003, 5.130655e-003, 1.453379e-002, 9.651764e-002, -5.456803e-002, -1.109620e-001, 9.309795e-002, -1.633565e-002, 5.761548e-002, -1.084761e-002, -8.170524e-002, 4.036236e-003, 6.067720e-003, -4.174700e-002, -2.313175e-002, -3.570459e-002, 2.662022e-002, -7.566535e-003, 1.282056e-002, -4.336377e-002, 9.269079e-002, 7.647182e-003, -2.555112e-002, -1.039821e-001, -4.307159e-002, 1.313166e-001, -1.276488e-002, -9.373607e-002, 1.210820e-001, -5.947589e-002, 4.508501e-003, -4.001012e-003, -3.836113e-002, 4.464215e-002, -5.656878e-002, -4.116378e-002, 7.121943e-002, -2.262561e-001, 1.222859e-001, 6.817987e-002, 2.396592e-001, -1.307165e-001, 6.819344e-002, 3.276033e-002, 4.740495e-002, 5.201320e-002, -7.922695e-002, -9.368419e-004, 4.301449e-002, -5.044152e-002, 1.473918e-003, 4.614485e-002, -7.473552e-002, -9.700987e-002, 6.572336e-002, -1.210894e-001, 6.099646e-003, 7.799005e-002, 2.082729e-002, -7.205325e-002, -7.124516e-003, 3.121990e-002, 4.422767e-003, 2.696114e-002, -


© ISO/IEC 2004 — All rights reserved

Copyright International Organization for Standardization
Provided by IHS under license with ISO
No reproduction or networking permitted without license from IHS
Not for Resale

9.527596e-003, 1.963324e-002, -1.536456e-002, 6.916341e-002, -3.312694e-002, -1.659610e-001, 8.089027e-002, 1.515421e-001, 2.677496e-003, -6.652789e-002, -8.735924e-003, 7.719573e-002, -3.152141e-002, 3.729720e-002, 6.090142e-002, -2.349306e-002, -7.409085e-003, -2.092596e-002, 4.095867e-002, -3.246709e-002, -1.563732e-002, 2.545000e-002, 3.467301e-002, 1.757125e-002, -1.452087e-016, 6.428995e-003, -2.195944e-002, 2.523662e-002, 5.910143e-003, -2.783585e-002, -4.994965e-003, -2.041586e-003, -9.280331e-003, 2.041586e-003, 4.994965e-003, 2.783585e-002, -5.910143e-003, -2.523662e-002, 2.195944e-002, -6.428995e-003, -3.528885e-002, 5.347775e-002, -1.043915e-001, 2.900719e-002, 1.043725e-001, 5.503898e-002, -6.688913e-002, -6.723078e-002, -5.614063e-002, -2.479321e-002, 1.127573e-001, 6.864572e-004, -6.840815e-003, -9.120504e-002, -3.313771e-003, -2.155734e-002, 7.317352e-002, -9.422461e-002, -4.863716e-003, -6.871201e-003, 6.731393e-003, -1.914425e-002, 4.903556e-002, 2.866145e-002, 5.942675e-002, -1.791905e-002, -1.072184e-002, -5.895137e-002, -3.264173e-002, -7.927040e-002, 7.592383e-002, 4.048740e-002, 3.582041e-002, -6.219964e-002, -6.352518e-003, -1.237325e-001, 6.977317e-002, 2.784810e-003, 6.651361e-002, 2.353551e-002, -9.769912e-003, 3.325194e-002, 1.998294e-002, 7.524883e-002, 7.163200e-002, -2.188264e-001, 4.886781e-002, 1.152015e-001, 1.779245e-001, -1.432940e-001, 7.239538e-002, -2.270644e-002, -5.089118e-003, -2.227913e-002, -5.361573e-002, -3.777916e-002, -6.036261e-002, 3.169070e-002, 2.541710e-003, 3.550908e-002, 1.849991e-002, -5.714040e-002, 7.175366e-002, 4.168847e-003, -1.910087e-002, -5.280741e-002, 2.298223e-002, 2.051790e-002, -6.459207e-002, -1.239085e-002, -4.982854e-002, 1.959722e-002, 4.357540e-002, -3.852550e-002, -4.574440e-002, 7.544239e-002, -5.956518e-002, 5.425748e-002, -2.419505e-002, 1.152553e-001, -3.010202e-002, -2.521077e-002, -6.540308e-002, -3.494190e-003, 2.966099e-002, -1.715294e-002, 1.803648e-002, -1.965030e-002, -1.783805e-002, -4.505032e-002, 9.555352e-003, -5.727907e-002, 4.161667e-003, 7.583896e-002, -1.126712e-001, 1.381986e-001, -1.022821e-001, -4.402386e-002, 4.468407e-002, 9.270962e-002, 2.542075e-002, 8.186482e-003, -2.802130e-002, -1.745743e-002, -1.901912e-002, 3.207044e-003, -2.310716e-002, -4.418244e-002, 5.067313e-002, 7.126324e-002, -6.686369e-002, -2.229140e-002},
{3.960818e-003, -1.812097e-003, -7.779174e-003, -4.572032e-002, 5.911949e-002, -4.162934e-002, -5.656127e-003, -1.227426e-002, 1.488101e-001, -1.227426e-002, -5.656127e-003, -4.162934e-002, 5.911949e-002, -4.572032e-002, -7.779174e-003, -1.812097e-003, -2.077440e-002, 7.475227e-002, 2.834614e-002, -1.126950e-001, 7.887956e-002, -6.753718e-002, 4.759672e-002, -4.345018e-002, -7.413468e-003, 7.810341e-006, 2.518218e-002, -7.208116e-002, 1.374811e-001, -8.180361e-002, 2.099739e-003, -2.695354e-002, 7.359623e-003, 3.250452e-002, 2.367550e-002, -7.260325e-002, 1.088334e-001, 1.906746e-003, -5.647816e-002, 6.595067e-002, -3.489106e-002, -8.832951e-003, -5.726308e-002, 6.332744e-002, 3.079518e-002, -1.337053e-001, 7.468299e-002, -9.426244e-003, 8.343999e-002, -1.135450e-001, 9.263704e-002, -1.350489e-001, 2.485605e-002, 2.553894e-002, -1.806151e-002, 4.879997e-002, 3.832786e-002, 1.016569e-002, -6.912779e-002, 6.087072e-002, 2.653589e-002, -1.227509e-001, -1.043468e-002, -6.876152e-002, 7.691210e-002, 1.915726e-001, 1.472916e-001, -1.247703e-001, -1.136236e-001, -5.202388e-002, 5.885862e-002, -6.334493e-003, -1.787681e-004, -3.469357e-002, 9.343378e-002, 2.229428e-002, -6.065249e-002, -5.576272e-002, 1.860927e-001, 7.756587e-002, 9.672669e-003, -2.163347e-002, 6.889219e-002, 2.617088e-002, -3.269757e-002, 1.568398e-002, 7.108114e-003, 8.846702e-002, -1.701042e-002, 3.720690e-002, -5.562624e-002, -3.535569e-003, 6.008782e-002, -3.434510e-002, -2.765784e-002, 7.539681e-002, -7.398272e-002, -1.086567e-003, 2.934164e-002, -2.871024e-002, 5.184607e-002, -6.556433e-002, 8.568120e-002, -2.085455e-002, 2.068983e-002, -2.624448e-002, 2.267337e-002, 1.219496e-002, -2.185260e-002, 4.567725e-002, 7.424337e-002, 2.129785e-002, 4.766747e-002, 2.860436e-002, -4.343469e-002, -5.544095e-002, 7.206577e-002, -2.465899e-002, -1.150243e-002, 2.244567e-002, -3.161428e-002, -3.582581e-003, 2.863869e-002, 9.280579e-003, 6.786874e-002, -2.560346e-002, -9.932506e-002, 1.451660e-001, -1.306673e-016, 3.998761e-003, -9.023282e-004, -2.525807e-002, 2.421287e-002, 2.108550e-002, -3.160081e-002, 1.309454e-002, -3.316862e-002, -1.309454e-002, 3.160081e-002, -2.108550e-002, -2.421287e-002, 2.525807e-002, 9.023282e-004, -3.998761e-003, 4.844934e-002, -3.482763e-002, 8.324604e-002, -6.220039e-002, -6.694087e-002, 6.003464e-002, -4.058298e-002, 3.634920e-002, -3.422423e-002, -2.557038e-002, 2.957839e-002, 9.283750e-002, 2.515054e-003, -8.212277e-002, 6.499795e-002, 4.573531e-002, -6.489006e-002, 1.011544e-001, 1.592837e-002, -1.231799e-002, -1.427173e-001, 4.767397e-002, 3.876860e-002, -4.752626e-002, 9.174807e-002, -2.081271e-002, -4.700164e-002, 6.280626e-002, -1.672502e-001, 5.827933e-002, 1.749141e-002, -5.809447e-002, 7.566819e-002, -3.438835e-002, 9.471576e-002, 1.640313e-001, -1.056159e-001, -1.216239e-001, -2.282678e-002, 1.528659e-003, -3.233338e-002, 6.151824e-002, 3.045006e-003, -4.316822e-002, -6.164198e-002, 1.217494e-001, -1.299993e-001, 1.782481e-001, -1.081724e-001, -1.996269e-003, -9.245998e-002, 1.024199e-001, -3.372148e-002, 2.816033e-002, -5.121582e-003, -4.223018e-002, 3.121430e-002, -5.020327e-002, -4.885428e-002, 3.060412e-002, -2.418827e-002, 1.083357e-001, -6.489612e-002, -4.743716e-002, 3.262226e-002, -1.506194e-001, -9.365926e-002, 1.059619e-001, -2.674497e-002, 4.377826e-002, -1.855139e-002, 3.438776e-002, -1.201430e-002, 2.093189e-003, -1.574395e-002, -4.330412e-002, -2.823205e-004, 1.485971e-001, -1.568872e-001, -9.702939e-003, -5.243021e-002, -2.185948e-002, -3.472436e-002, -1.893076e-002, 3.265724e-002, -1.174003e-002, 1.683930e-002, -2.596106e-002, -

© ISO/IEC 2004 — All rights reserved


Copyright International Organization for Standardization
Provided by IHS under license with ISO
No reproduction or networking permitted without license from IHS
Not for Resale

3.581632e-002, -4.977333e-005, 9.404969e-003, 4.453976e-002, 3.599472e-002, -1.424444e-002, 2.354020e-003, 2.547369e-002, 3.064795e-002, -4.051865e-002, 5.591909e-002, -2.835289e-002, 2.563969e-002, -3.414973e-002, -2.943910e-003, 3.556388e-003, 1.630347e-002, -1.626928e-002, -2.300728e-002, -1.656835e-002, 1.752501e-002, 3.990335e-002, -9.188742e-002, 4.110222e-002},
{-4.106913e-003, 1.164215e-002, 4.778690e-003, -4.498595e-002, 3.312494e-002, -1.841411e-005, 5.005371e-002, -1.721130e-002, -4.603669e-002, -1.721130e-002, 5.005371e-002, -1.841411e-005, 3.312494e-002, -4.498595e-002, 4.778690e-003, 1.164215e-002, -1.848761e-002, -2.664505e-003, -5.353619e-002, -7.792161e-002, 1.074789e-001, 5.494327e-002, 5.993213e-002, -7.309260e-002, -3.549911e-002, -1.737834e-002, -1.540799e-002, 4.886293e-002, 8.140166e-003, 2.852973e-002, -6.024492e-002, -3.004061e-002, 4.300988e-002, 1.307828e-001, -4.117358e-002, -6.124546e-002, -1.237403e-002, -1.892329e-002, 2.729766e-002, 3.359939e-002, -3.725401e-002, -3.031875e-002, -9.961204e-003, 8.411566e-002, -7.123776e-002, -3.331165e-002, -1.074435e-001, 1.023174e-001, -4.737420e-002, -2.478464e-002, 7.684130e-002, -1.162861e-002, -7.303971e-002, 4.402792e-002, 1.508133e-002, -5.638446e-003, 4.453692e-002, -3.643760e-002, -2.144378e-003, 3.503741e-002, -9.377523e-002, 1.564866e-003, 3.302539e-002, -1.676671e-001, 6.919822e-002, 4.939541e-002, -1.450163e-002, -6.075063e-002, 5.640751e-002, 5.424241e-002, -5.680060e-002, 2.318973e-003, 7.435312e-003, -2.158233e-002, -4.706581e-004, -4.609380e-002, 1.162668e-001, -3.806764e-002, 1.929737e-002, 2.883771e-002, -1.857431e-001, 1.492395e-001, -1.037336e-001, 1.849257e-002, 7.094564e-003, -7.423941e-002, 1.824268e-002, -2.019700e-002, -1.239145e-002, 5.470274e-002, -7.961061e-003, -1.870860e-002, 8.396433e-002, -3.298784e-003, -1.999636e-001, 1.150623e-001, -1.102890e-003, -1.463087e-002, -2.109036e-001, 2.473827e-002, 1.855734e-003, -1.210170e-002, -4.413950e-002, -2.572614e-003, 2.231083e-002, 4.601926e-002, -7.165843e-003, 2.796730e-002, 9.964122e-002, -1.305522e-002, -1.702926e-001, 1.630349e-002, -3.063111e-002, -1.376718e-001, -3.897469e-002, 2.608154e-002, -3.194139e-002, 3.211612e-003, -6.784623e-003, -1.450640e-002, 2.973980e-002, -3.046106e-002, -4.023162e-003, -3.330383e-003, 1.828513e-003, 3.564359e-002, 1.508162e-001, -2.309056e-002, -9.893278e-017, 1.129497e-003, -4.842055e-003, -6.960742e-003, 7.016506e-002, -8.916637e-002, 1.832443e-002, 1.107275e-002, 2.010311e-002, -1.107275e-002, -1.832443e-002, 8.916637e-002, -7.016506e-002, 6.960742e-003, 4.842055e-003, -1.129497e-003, -2.648444e-002, 1.129803e-001, -4.128543e-002, -1.032675e-001, 1.389889e-001, 3.154242e-002, -3.284632e-002, -1.024130e-001, -2.248724e-002, 6.191743e-004, 1.251766e-002, 1.067018e-001, -7.105021e-002, -3.079194e-002, -8.024584e-002, 3.632583e-002, 3.736427e-003, -1.467157e-001, -1.295428e-001, 8.048286e-002, -1.794880e-002, 2.744600e-002, 4.717420e-002, 2.478309e-002, 3.401307e-002, 5.303061e-003, -2.351436e-003, -8.859754e-002, -2.098370e-002, 1.997600e-002, -4.038507e-002, 7.305870e-002, -1.612200e-003, 7.595789e-003, -2.322669e-002, 9.802871e-002, 1.787980e-003, 3.883308e-002, -9.986223e-002, -1.784380e-002, -1.183276e-002, -7.072780e-003, -1.696719e-002, -1.261349e-001, -1.182624e-002, 8.986572e-002, -6.467915e-002, 8.076213e-003, -1.115876e-001, -7.238590e-002, -8.716380e-003, 4.797064e-002, 1.905519e-002, -1.054295e-001, 4.355742e-002, -2.461919e-002, 3.773247e-002, -1.361343e-002, 9.656845e-003, -2.114345e-002, -1.804712e-002, 7.764933e-002, -1.106667e-001, 1.914055e-001, -7.311522e-002, -4.263481e-002, -7.888441e-002, 2.026433e-002, 4.088480e-002, -2.916112e-002, -2.801887e-002, -2.105017e-003, 4.801096e-002, 3.809350e-002, 3.961137e-002, 8.933957e-002, 3.704594e-002, -1.153207e-001, -1.500161e-002, 9.181220e-002, 6.236602e-002, -2.296950e-001, 1.604999e-002, 4.741783e-003, -1.461043e-002, -1.271492e-002, -5.238794e-002, 3.427838e-002, -5.270619e-002, 2.264841e-002, 1.188384e-002, -2.169324e-002, 6.893625e-003, 5.724426e-002, 1.884135e-001, -1.670546e-002, -7.335011e-004, -8.749617e-002, 2.655496e-002, 4.086923e-002, -3.271853e-002, -4.360485e-002, 1.168292e-002, -2.768664e-002, 2.665232e-002, 1.038963e-002, 5.349166e-004, -5.599684e-002, -2.904278e-002, 2.642713e-002, 6.039777e-002, 5.416803e-002},
{-5.319193e-003, 4.775019e-003, -2.682806e-002, -1.938455e-002, 1.278162e-001, -1.135343e-001, 7.253376e-003, -1.689483e-003, 6.596943e-003, -1.689483e-003, 7.253376e-003, -1.135343e-001, 1.278162e-001, -1.938455e-002, -2.682806e-002, 4.775019e-003, -4.898351e-003, -5.722812e-002, -6.300517e-002, 1.298467e-001, 6.942574e-002, -2.117337e-001, 2.584313e-002, 9.199654e-002, 5.970641e-002, 2.063057e-002, 7.093277e-002, -1.995847e-001, 9.967340e-003, 7.595386e-002, -5.777744e-002, 2.471697e-002, -3.339624e-002, 1.312425e-001, 2.764930e-002, 4.647126e-002, 7.699287e-003, -2.967339e-002, 1.171459e-002, -6.792292e-003, -7.491913e-002, -1.890467e-002, -8.002531e-003, -5.437400e-002, -6.460087e-002, 1.106839e-001, -2.677867e-002, -6.560220e-002, -2.387309e-002, 5.795148e-002, -1.024891e-001, 5.482951e-002, -3.147277e-002, 4.975528e-002, -2.698469e-002, 6.356738e-002, -8.277514e-002, -1.928693e-002, -5.991503e-002, 1.048686e-001, -8.599232e-002, 6.772897e-002, -3.368481e-002, 4.680059e-002, 1.456778e-001, 1.112152e-001, -9.027282e-002, -2.432740e-002, -7.463670e-002, -5.586412e-002, -4.917555e-002, -1.846448e-002, 9.476475e-002, -3.653978e-003, -1.063049e-002, 9.149276e-003, -1.493652e-003, 3.368376e-004, -5.243210e-002, 4.226745e-002, 1.562905e-001, 1.095977e-002, -2.746309e-002, -3.379345e-002, -1.336883e-002, -9.327094e-003, 4.342391e-002, -6.614187e-002, -2.646836e-002, -1.067314e-002, 4.845556e-002, -3.483768e-002, 1.267805e-002, 1.002714e-001, -6.285052e-002, 9.116722e-002, -7.941437e-002, 9.042262e-002, -6.062135e-002, 5.203474e-002, -2.140017e-003, -5.519328e-002, -4.596617e-002, 1.991986e-002,


© ISO/IEC 2004 — All rights reserved

Copyright International Organization for Standardization
Provided by IHS under license with ISO
No reproduction or networking permitted without license from IHS
Not for Resale

1.064607e-002, 9.721075e-003, -1.518292e-002, 1.656307e-002, 6.257647e-003, 5.833200e-002, 9.305150e-002, -3.212418e-002, 1.811740e-001, -9.429325e-002, 1.879420e-002, -4.799097e-002, -5.797262e-002, -4.210076e-002, -4.466430e-002, 1.448785e-003, 2.980533e-002, 1.390531e-002, 2.371068e-002, 2.912708e-003, -1.088437e-002, -4.073221e-002, 4.687141e-002, -4.346868e-002, -3.432183e-017, -3.864449e-003, -5.468603e-003, 3.333265e-003, 2.371367e-002, -2.581765e-002, 7.363734e-003, 1.125872e-002, 1.690419e-002, -1.125872e-002, -7.363734e-003, 2.581765e-002, -2.371367e-002, -3.333265e-003, 5.468603e-003, 3.864449e-003, 1.481782e-002, 5.484276e-002, -4.413620e-002, 2.319252e-002, -1.112267e-001, -1.157991e-003, 7.864412e-002, -1.001484e-002, 5.874084e-002, -6.343596e-002, 7.172530e-003, 1.219473e-001, -1.823589e-001, 1.354799e-002, 5.270263e-002, 6.108352e-002, 2.455586e-002, -8.750290e-003, 4.579488e-002, -5.870530e-002, -8.283165e-002, 1.446550e-001, -2.077970e-002, 6.146419e-002, -1.580672e-001, 3.281134e-002, -2.672501e-003, 1.818185e-001, -7.119395e-002, -6.416736e-002, -4.596282e-002, 1.325962e-002, -4.946558e-003, 1.275309e-001, 1.753318e-001, -4.478376e-003, -1.199903e-001, -1.957347e-002, 2.385674e-002, -4.199543e-002, 4.334415e-002, -4.654242e-002, 6.644053e-002, -1.821000e-002, -7.510908e-002, -9.617493e-003, 6.880357e-002, -1.411270e-002, 7.020507e-002, -7.706377e-002, 1.932008e-001, -4.157124e-002, 1.705841e-002, -4.181305e-002, -2.051502e-003, -4.184415e-002, -3.913527e-002, 8.117912e-003, 2.066125e-002, -4.652488e-002, -1.274100e-002, 3.428518e-002, 3.036455e-002, 6.383317e-003, -5.520935e-002, 2.440829e-002, -3.760752e-002, 2.118636e-002, 1.651671e-002, 1.239957e-002, -4.598623e-002, 1.802004e-002, -5.330871e-002, -9.447869e-003, -1.096516e-002, 2.023252e-002, -1.388108e-002, 7.513157e-002, 3.955622e-002, -7.522190e-002, -1.646940e-002, -9.832721e-002, 4.093778e-002, -2.833328e-003, -6.936373e-002, -2.746304e-002, -4.040332e-002, -1.279801e-002, 1.861979e-002, 1.929251e-002, -5.158955e-002, 5.928539e-002, 1.536504e-002, -1.124847e-001, 1.053197e-001, -4.507133e-002, 3.436657e-003, -3.072988e-002, 1.781215e-002, -7.465032e-002, -7.087102e-002, 3.109956e-002, 4.405968e-002, -1.695914e-002, -1.820016e-002, -6.446128e-002, 4.638604e-002, 6.093469e-002, -5.305475e-002, -7.184112e-003, 5.066761e-002, 7.133098e-002},
{-7.545449e-004, 7.834978e-003, -1.557400e-002, -7.285588e-003, -6.206352e-002, 6.688038e-002, 6.713209e-003, -2.533232e-002, -3.699903e-002, -2.533232e-002, 6.713209e-003, 6.688038e-002, -6.206352e-002, -7.285588e-003, -1.557400e-002, 7.834978e-003, 1.914573e-002, 3.645824e-002, -5.364893e-002, 7.038510e-002, -7.185728e-002, -9.474680e-002, 5.406184e-002, -3.110697e-002, -2.834572e-002, -2.342023e-002, 1.869487e-002, -6.203796e-002, -1.265463e-001, 4.675265e-002, 3.117110e-003, -1.224418e-002, -4.246002e-002, 3.119781e-002, -1.092191e-001, 1.163468e-001, 1.833827e-003, 1.448994e-002, -1.349717e-001, 1.421374e-002, -6.873020e-002, 5.166327e-002, -4.578259e-002, -4.455064e-002, 7.653437e-002, 2.113157e-002, 3.381510e-002, -3.750512e-003, 1.189713e-001, 5.152126e-003, -6.556639e-002, 5.276304e-002, 1.583734e-001, -7.413415e-002, 6.903417e-002, -2.330506e-003, -1.983409e-003, -6.848667e-002, -3.766752e-002, -7.701857e-002, 1.021711e-001, 7.085744e-002, -1.396778e-002, -2.505949e-002, -1.160028e-001, -2.728176e-002, -9.587541e-002, 1.314692e-001, -8.991816e-002, 9.502055e-003, -4.847651e-002, -1.671604e-004, -7.771696e-003, 4.059411e-002, -8.355693e-002, 2.026396e-002, -4.414008e-002, 9.387296e-002, -1.233331e-001, 8.540511e-002, 5.998021e-002, -6.366026e-002, -6.731268e-002, 4.996567e-002, -1.242688e-001, 3.624672e-002, 9.224067e-003, 4.511767e-002, 5.508270e-002, -5.851867e-003, 7.105258e-002, 1.533335e-001, -1.060153e-001, 6.274253e-002, -7.028207e-002, -4.453168e-002, -5.489383e-003, 2.582893e-002, 1.979489e-002, -4.910547e-002, 5.084847e-002, -4.712091e-002, 4.070542e-002, -1.293136e-002, -1.613908e-003, -1.738405e-002, 7.560310e-003, -6.414362e-002, 1.204311e-001, 6.663107e-003, 5.274298e-002, 8.792472e-002, -9.895904e-002, -3.067072e-002, -4.293988e-002, 7.500070e-002, 3.920467e-002, -2.615412e-002, -6.716165e-003, 2.481184e-002, 6.315888e-004, 1.965949e-002, -3.252565e-002, -4.357434e-002, 4.789864e-002, -2.037503e-002, 1.140052e-001, -2.658343e-002, 1.419118e-016, 8.175074e-003, -1.362340e-002, 2.007957e-002, -7.654436e-003, -2.682241e-002, -2.270958e-003, -1.627393e-002, -1.803684e-002, 1.627393e-002, 2.270958e-003, 2.682241e-002, 7.654436e-003, -2.007957e-002, 1.362340e-002, -8.175074e-003, 3.608379e-002, 3.396578e-002, 7.655225e-003, -7.778950e-002, 1.615544e-001, -1.534632e-001, 1.059587e-001, -2.290381e-002, 3.984651e-003, -2.415045e-002, 1.451255e-002, -2.196160e-002, 1.464000e-001, -1.489458e-001, -1.069790e-002, -7.655349e-004, -2.546507e-002, -4.504153e-002, -1.888752e-002, 8.111272e-002, 7.791202e-002, -1.490441e-001, -9.774744e-003, 5.612622e-002, -2.375154e-002, 2.700565e-002, 1.080074e-001, -2.015415e-001, 2.699866e-002, 6.245244e-002, 8.868489e-002, 1.107360e-001, -7.978663e-002, 4.338744e-002, -2.850526e-002, 7.644152e-003, -1.033101e-002, 3.595269e-002, -9.516520e-003, -4.407968e-002, -7.335307e-002, 7.080809e-002, -8.453970e-003, 1.002946e-002, 7.479525e-002, -1.842440e-002, -1.331768e-001, -1.592460e-002, 4.871700e-003, -4.005734e-003, 8.096245e-002, -2.005812e-002, -1.152317e-001, 9.136188e-002, 4.400262e-004, -8.098530e-003, -3.059486e-003, -4.686012e-002, 7.692314e-002, 1.016463e-001, -1.456016e-001, 6.443181e-002, -7.951486e-002, -3.304686e-002, 1.414926e-001, 6.202348e-002, 6.125048e-002, -9.924519e-002, 6.148665e-003, 7.304980e-003, 8.401802e-002, -2.617377e-002, -4.629894e-002, -4.493014e-002, 3.252895e-003, 1.780388e-002, 1.595445e-002, -4.846157e-002, 5.516407e-002, -1.705813e-002, -1.037588e-001, 2.965904e-002, 1.557819e-003, -3.509597e-002, 1.012990e-001, -4.858102e-002, -6.686645e-002, 1.563665e-003, -

© ISO/IEC 2004 — All rights reserved


Copyright International Organization for Standardization
Provided by IHS under license with ISO
No reproduction or networking permitted without license from IHS
Not for Resale

1.479464e-002, -1.640595e-002, -7.052129e-002, -8.964850e-002, 5.854308e-002, -5.207845e-002, 9.152265e-002, 3.935400e-003, 7.812735e-002, 1.625877e-002, -6.129886e-002, -4.235408e-002, -3.887361e-002, 8.898937e-003, -1.389672e-002, -1.190752e-002, 6.963197e-003, -5.290103e-003, 2.398143e-002, 6.691164e-002, -7.962876e-002, -4.772013e-002, -3.374992e-002, -9.324896e-002}, {-1.802724e-003, 9.032410e-004, -8.041937e-003, 2.884494e-002, -5.529212e-002, 2.986174e-002, -5.166847e-002, 4.019917e-002, -2.293551e-002, 4.019917e-002, -5.166847e-002, 2.986174e-002, -5.529212e-002, 2.884494e-002, -8.041937e-003, 9.032410e-004, 2.717739e-002, 5.184011e-002, -5.870982e-003, 4.861521e-002, -1.896594e-002, 2.470586e-002, -8.715975e-002, -2.736701e-002, 1.518228e-002, -1.570497e-003, -2.161713e-002, -4.577228e-003, -1.174276e-001, 2.577940e-001, -8.693030e-003, -7.251905e-002, 2.647348e-002, 3.012522e-002, 1.466415e-001, -4.250087e-002, -6.311153e-002, -6.140719e-002, 1.069359e-001, -1.633989e-002, -4.182224e-003, 2.534760e-002, 8.778096e-002, -8.468561e-002, 1.303010e-003, 4.870044e-002, 5.415403e-003, -1.550871e-002, 2.945872e-002, -1.199919e-001, 8.639569e-002, 1.289651e-001, -3.660721e-002, 5.168211e-002, -8.196920e-002, -3.497909e-002, -1.314465e-002, 2.498915e-002, 2.938711e-002, -7.743440e-002, -6.311058e-003, 1.850507e-001, -8.737155e-002, -9.753157e-002, -4.401043e-002, 4.829389e-002, 2.841206e-002, 1.754454e-002, 1.443632e-002, 9.185112e-002, -2.580508e-002, 1.167866e-003, -1.033318e-002, -4.987674e-002, 7.578843e-003, 3.915875e-002, 2.922032e-002, -9.331141e-003, -1.711366e-001, 1.355888e-001, -3.670017e-002, 2.478360e-002, -9.503320e-002, 6.756164e-002, 9.548002e-002, 4.511669e-002, 5.804662e-002, 9.331357e-003, -4.626961e-002, 4.017420e-003, 3.568742e-002, -8.278052e-003, 5.022275e-004, 1.295523e-001, -1.510791e-001, -5.930623e-002, -6.339931e-002, -3.667600e-002, 2.274002e-002, 7.532443e-002, -4.834123e-002, 2.010674e-004, -2.379246e-002, 9.946590e-003, 2.281143e-002, 3.727735e-002, -6.860453e-002, -2.225603e-002, 4.915321e-002, 5.331519e-002, -1.238364e-001, 1.190804e-001, -8.191854e-003, -7.741990e-002, 3.530755e-003, 5.485115e-002, 1.328269e-002, -1.352879e-002, -2.977969e-003, 1.261067e-002, 9.221197e-003, -4.879528e-002, 1.043730e-002, -5.272294e-002, 3.488344e-002, 4.516403e-002, 5.327396e-002, -9.988204e-002, 3.427712e-017, -6.762409e-003, 3.290821e-002, -5.080238e-002, 1.463582e-003, 4.558204e-002, -1.689470e-002, 2.069171e-002, 6.944099e-002, -2.069171e-002, 1.689470e-002, -4.558204e-002, -1.463582e-003, 5.080238e-002, -3.290821e-002, 6.762409e-003, 1.152361e-002, 3.277536e-002, 8.834515e-002, -8.651447e-002, -8.923784e-002, 7.334260e-003, 8.297872e-002, -8.351213e-004, -1.484834e-002, 9.459365e-003, 8.903348e-002, -1.003740e-001, 5.431971e-005, 7.324329e-002, -7.394543e-002, 9.464857e-002, 4.129586e-002, -4.667559e-003, 1.041978e-001, -8.414539e-002, 9.665644e-003, -6.493937e-002, -2.745944e-002, 1.682586e-002, -4.421748e-002, 3.890697e-002, 2.242294e-004, 5.673495e-002, 4.284695e-002, -5.374524e-003, -2.365062e-002, -7.122927e-002, -1.310715e-001, -1.160673e-001, -4.714824e-002, 1.072679e-002, 1.812503e-001, -6.565866e-002, -7.970498e-003, -7.934170e-003, -5.078667e-002, -1.166601e-003, -2.661817e-003, 8.681508e-004, 1.506142e-001, -8.286683e-002, -1.635107e-003, -2.586663e-002, -4.605969e-002, -2.709916e-002, -2.053947e-001, 1.931020e-002, 4.618548e-002, 8.799567e-002, -3.439046e-002, 1.690256e-002, -1.125180e-003, -5.652006e-002, 2.935793e-002, 8.352446e-003, 1.464449e-001, -3.224068e-002, -8.396030e-002, 3.191392e-002, 1.008298e-001, -4.635658e-002, -7.197757e-002, -6.625638e-002, -8.215383e-003, -3.721757e-002, 1.561954e-002, -5.362276e-002, 4.669444e-002, -3.643369e-002, 5.877149e-002, -3.028679e-004, -4.807475e-002, -4.818615e-004, 3.515490e-002, 3.476540e-002, 8.271052e-002, -3.552010e-002, 3.045671e-002, -1.398140e-002, 2.482634e-002, -1.741023e-002, -2.539299e-002, 5.622422e-003, -7.292849e-002, 8.450980e-002, -5.915330e-002, -2.401782e-002, 4.979356e-002, 1.133705e-001, 2.694104e-003, -4.980854e-003, -4.176635e-004, 5.202265e-003, 4.732973e-002, -5.114144e-002, 2.730234e-002, 2.539151e-002, 2.199575e-002, 1.262885e-002, 2.092075e-002, -1.501673e-002, -3.779668e-003, -1.983523e-002, 2.285432e-003, -1.503372e-001, 1.988597e-001, -5.426267e-002}, {-2.054004e-003, -4.262012e-003, 4.454946e-003, -3.938928e-002, -6.589184e-002, 1.202072e-001, -5.304843e-002, -1.757217e-002, 2.098416e-002, -1.757217e-002, -5.304843e-002, 1.202072e-001, -6.589184e-002, -3.938928e-002, 4.454946e-003, -4.262012e-003, 1.224712e-002, 1.886422e-002, -1.256507e-002, 5.579613e-002, -1.578393e-001, 1.182855e-001, -6.832755e-002, 3.498579e-002, -3.861421e-002, 4.656461e-003, 5.259622e-002, 1.391445e-002, -1.334508e-001, -2.856597e-003, 8.131016e-002, 2.448292e-002, -2.101013e-002, 3.413689e-002, -3.255105e-002, -2.264104e-002, 7.605538e-003, 1.917770e-002, 4.410707e-002, -9.460376e-002, -1.409074e-003, -3.065287e-004, 4.528105e-002, 6.255927e-002, 3.101879e-002, -1.425858e-001, 5.189205e-002, 4.092508e-002, -3.345382e-002, -1.984811e-002, 1.213227e-001, -3.267713e-002, 6.316526e-002, 1.350509e-002, 5.409502e-002, 1.807493e-002, 1.681421e-003, 4.748186e-002, 8.932426e-003, -1.283875e-001, -7.572070e-002, 4.498256e-002, 4.714566e-002, 1.831612e-002, -4.730288e-002, 1.055133e-002, 8.553290e-002, -6.186835e-002, 1.273456e-001, -1.877459e-003, -9.124137e-003, 3.942583e-002, -9.975483e-003, 2.472435e-002, -1.711322e-002, -6.494229e-002, 1.854242e-001, -1.121862e-001, -1.082578e-002, -1.983796e-002, 1.063500e-002, 3.868323e-002, -4.758011e-002, -1.124962e-001, 5.430770e-003, 1.346391e-001, -3.777177e-002, -2.524103e-002, 2.828176e-002, -1.305512e-002, -5.430936e-002, 5.612415e-002, 5.091591e-002, -8.412469e-002, 2.781144e-002, -3.471710e-002, 5.358621e-002, -6.445465e-002, -7.969618e-003, -7.081976e-002, -8.953911e-002, 4.952534e-002, -1.847900e-002, -3.078841e-002, -


© ISO/IEC 2004 — All rights reserved

Copyright International Organization for Standardization
Provided by IHS under license with ISO
No reproduction or networking permitted without license from IHS
Not for Resale

3.589140e-003, 1.145414e-002, -4.484541e-002, -1.152583e-002, -5.973524e-002, 6.830268e-002, -7.228484e-002, 3.842736e-003, -5.350317e-002, -4.196162e-004, 7.412791e-002, -2.287905e-003, -4.056446e-002, 4.639565e-002, 9.676926e-002, 3.530992e-002, -1.498577e-003, -1.062327e-002, 1.825699e-002, -1.864160e-002, -5.292582e-002, -1.402777e-002, 9.948840e-002, 3.880203e-002, 2.889284e-017, -2.124654e-003, -5.091800e-003, -1.414952e-002, 1.504855e-002, 2.283587e-003, -3.119142e-003, -5.281211e-003, 5.738400e-002, 5.281211e-003, 3.119142e-003, -2.283587e-003, -1.504855e-002, 1.414952e-002, 5.091800e-003, 2.124654e-003, 4.944033e-002, 2.523252e-002, 3.516359e-002, -2.588733e-002, -4.323373e-002, -3.315805e-002, 6.144159e-002, -3.830062e-002, 3.612266e-002, -2.025640e-002, 4.117496e-002, -5.196263e-002, 5.465230e-003, -2.056662e-002, 4.682731e-002, 1.879833e-002, 1.497221e-002, 8.865953e-002, 7.026915e-002, -3.493603e-002, -8.661245e-003, -4.178043e-002, 5.458565e-002, 3.466467e-002, 5.552053e-002, 2.775333e-002, 4.789552e-003, -1.022138e-001, -8.987074e-002, 2.589513e-002, 1.046053e-001, -9.525417e-002, 5.826069e-002, -1.796318e-001, 6.903636e-002, -1.006979e-001, 4.415073e-002, -6.976718e-002, 4.607360e-002, -1.491152e-003, -1.086368e-001, -6.918445e-002, -1.269928e-002, 2.453932e-002, -1.132312e-002, -6.657039e-002, 8.285924e-002, 2.685126e-001, -7.668823e-002, 8.120477e-003, 4.604363e-002, -6.331596e-002, -3.508140e-003, 8.542790e-002, -1.711338e-002, -1.687309e-002, -5.358059e-002, 2.763128e-002, 7.414526e-003, 3.395154e-002, 1.967880e-002, -7.335535e-003, 2.223679e-001, -1.594492e-001, -1.675404e-001, -1.457098e-001, 1.154770e-002, -1.391781e-001, 4.500330e-002, -4.797664e-002, -3.622156e-002, -3.950441e-003, 8.723389e-002, 1.285324e-002, 1.571546e-002, -1.246032e-001, 1.157979e-001, -2.553452e-002, 8.280855e-002, -1.825033e-002, -6.852078e-002, 5.128356e-002, -1.400051e-001, 6.582163e-002, -5.356214e-003, 1.755009e-003, 2.546750e-002, -1.754825e-003, -2.601118e-002, 8.274820e-003, -3.468537e-003, -4.713913e-002, -7.401973e-002, 9.301505e-002, -3.400982e-002, -2.361715e-002, -1.093958e-001, -9.838823e-003, -2.351446e-002, 4.497491e-002, 3.822977e-002, 9.874075e-002, -1.766824e-003, -9.028442e-003, -2.389736e-002, 2.173251e-002, -5.054722e-002, 3.549401e-002, 5.193561e-003, -1.666492e-002, 5.378404e-002, -5.401923e-002},
{2.737375e-003, 1.352434e-003, -5.593250e-003, 1.007674e-002, -3.042430e-002, -1.661299e-002, 4.934764e-002, 2.561311e-002, -8.048726e-002, 2.561311e-002, 4.934764e-002, -1.661299e-002, -3.042430e-002, 1.007674e-002, -5.593250e-003, 1.352434e-003, 1.241077e-002, -1.166283e-001, 1.023722e-003, -1.049845e-001, -3.528118e-002, 1.604101e-001, -4.624299e-002, -3.083325e-002, 1.147990e-002, -9.961109e-003, 2.590086e-004, 1.552061e-001, -6.106683e-002, -1.072237e-001, 4.036549e-002, 2.629284e-002, 1.133101e-002, -3.455940e-002, 5.449830e-002, -2.828462e-003, -3.285977e-002, 4.178061e-002, -2.919279e-002, 3.009153e-002, 6.060500e-002, 5.551830e-002, 1.419611e-002, -1.808289e-002, -8.233409e-002, 9.787068e-003, 7.342613e-002, 1.746865e-002, 1.530421e-002, 7.409368e-002, 3.087391e-002, -1.267587e-001, 9.968386e-002, -7.117018e-002, 1.691301e-001, 9.447241e-003, -2.318991e-002, 4.444321e-002, 7.639662e-002, -1.067759e-001, 1.421001e-001, -7.342660e-002, 1.102456e-001, 1.071156e-001, -1.453383e-002, 6.467930e-002, 1.989910e-002, 1.018898e-001, -1.000640e-001, -4.101036e-002, -8.232345e-002, -1.849715e-002, -1.917058e-003, 8.622486e-003, -4.831488e-002, -1.006669e-001, -3.793061e-002, 1.608987e-002, -9.026824e-002, 8.588497e-002, 1.175488e-002, 1.267983e-001, -2.209427e-001, -1.165205e-002, -1.258985e-002, 1.148946e-001, -4.054434e-002, 4.150148e-002, 4.249530e-002, -8.469982e-003, -4.746273e-002, 7.072253e-002, 6.818171e-002, 1.584716e-002, -1.369864e-001, 1.692929e-002, 4.028500e-002, 8.098537e-002, 4.521722e-002, -6.401669e-002, -2.940092e-002, -4.824858e-003, 3.326266e-002, -4.391469e-002, -2.563109e-002, 1.698932e-002, -1.411497e-002, -6.145624e-002, -1.308876e-002, -6.684798e-002, 7.783575e-002, 2.757660e-002, 8.563390e-002, 5.199001e-002, -3.147677e-002, 8.844428e-002, -2.600084e-002, 1.836702e-002, 3.004638e-002, -9.108016e-003, -1.160235e-002, -1.348819e-002, 2.976217e-003, 6.563962e-002, -7.358336e-002, 1.417989e-002, -4.335110e-002, -6.874006e-002, 4.047657e-016, -4.739720e-003, -9.218020e-004, -1.530142e-002, 1.978246e-002, -2.832502e-002, 3.346918e-002, 2.840015e-003, 4.530328e-002, -2.840015e-003, -3.346918e-002, 2.832502e-002, -1.978246e-002, 1.530142e-002, 9.218020e-004, 4.739720e-003, 5.257249e-003, 8.944781e-003, -3.609440e-002, 3.575201e-003, 1.697117e-002, -5.385597e-002, -2.480322e-003, 8.097339e-003, 3.780149e-002, 3.531163e-002, -1.577918e-002, -5.224707e-002, -1.088229e-001, 1.147255e-001, 5.769731e-002, -3.060821e-002, 6.433089e-002, 8.993892e-002, -8.619392e-002, 1.348605e-001, -7.000086e-002, -2.622707e-002, 1.552142e-003, -8.539606e-003, -4.819800e-002, -6.330196e-002, 2.744586e-002, -8.571622e-003, 4.048933e-002, -3.926722e-002, 4.386692e-002, 4.409446e-002, 2.633079e-002, -2.813589e-002, 9.040012e-002, 7.250199e-002, 1.989594e-002, -5.226765e-002, -3.555852e-002, 1.605174e-002, -4.338401e-002, -2.006303e-002, -7.161798e-002, 6.035733e-002, 4.461398e-002, -2.117549e-002, 1.324727e-002, -1.297534e-002, -1.359040e-001, 7.498513e-002, -4.371790e-002, 6.378895e-002, 1.340891e-001, -3.293400e-002, 1.417228e-002, -3.093531e-003, 3.665600e-002, 1.498243e-002, 4.730246e-002, -8.662066e-002, 2.014956e-001, 2.765546e-002, -1.735539e-001, -1.186824e-001, 5.385455e-002, 4.206286e-002, -5.592793e-002, -1.039216e-001, -5.276420e-002, -3.000349e-002, 3.458503e-002, 2.534929e-002, 1.739138e-002, 7.442527e-002, 1.485838e-003, -6.550174e-002, 2.674805e-002, -1.204868e-002, 3.959288e-002, -1.438325e-001, 5.533210e-002, -2.729513e-002, 6.966198e-002, 3.382403e-002, -1.412960e-002, -5.053538e-003, -5.532993e-002, 3.575970e-002,

© ISO/IEC 2004 — All rights reserved


Copyright International Organization for Standardization
Provided by IHS under license with ISO
No reproduction or networking permitted without license from IHS
Not for Resale

3.896240e-002, 1.901902e-002, 3.529925e-002, 6.233874e-003, -4.975737e-002, 2.484944e-002, 3.518839e-002, -1.636557e-001, -1.246746e-001, -1.431787e-002, 1.060052e-001, -9.668954e-002, 2.264950e-002, 4.379217e-002, 2.579306e-002, -2.312946e-003, -2.249873e-002, 3.471939e-002, -2.916638e-002, 3.254289e-002, 1.364482e-001, -1.122587e-001, 7.628934e-002, -4.963022e-002},
{-1.224292e-003, 1.745412e-002, -3.295364e-002, -5.471137e-003, -9.651252e-003, 4.762853e-002, 2.051281e-002, -7.000692e-002, 4.249352e-002, -7.000692e-002, 2.051281e-002, 4.762853e-002, -9.651252e-003, -5.471137e-003, -3.295364e-002, 1.745412e-002, 7.658629e-003, -2.257812e-003, -4.026996e-003, -4.021910e-002, -5.607814e-003, 2.242335e-002, -6.694988e-003, 9.233126e-002, -3.978285e-002, 6.794595e-002, 2.275999e-002, 7.982559e-003, -2.033704e-002, -3.212202e-002, 3.572164e-002, -2.002046e-002, -2.013599e-002, -5.340812e-002, 1.378216e-002, 7.524336e-003, -1.012944e-001, 5.091743e-002, -1.889283e-003, -9.631683e-002, 2.622841e-002, -2.511093e-002, -1.014556e-002, -4.464812e-002, -2.882908e-003, -9.909971e-002, 2.837835e-003, -1.599191e-002, -2.649878e-002, 4.585144e-002, 4.272921e-002, -1.751835e-001, 2.223323e-002, 1.013457e-001, 1.266314e-001, 6.341336e-002, -6.988469e-002, -6.062947e-003, -2.701369e-002, 4.557840e-003, 6.821890e-002, -1.595665e-001, -3.789730e-002, -2.897697e-002, -2.980901e-002, -9.034917e-002, 7.695094e-002, -1.665405e-001, -9.740735e-002, 1.983620e-002, -5.833765e-002, -6.315855e-002, 2.561416e-002, -4.143251e-002, -1.046805e-001, -6.250917e-002, -5.751885e-002, 1.524853e-002, 1.681162e-002, -6.209371e-002, -5.445891e-002, -9.777556e-002, -5.294193e-002, -1.030203e-001, 3.020293e-002, 4.413706e-002, -5.210408e-002, -4.463630e-002, 3.370542e-002, -1.965236e-002, 1.423210e-002, 8.785110e-002, -5.913523e-002, 2.753013e-002, 4.449862e-002, -8.941001e-002, -7.978063e-002, -1.585520e-001, 2.750099e-002, -1.149312e-001, -6.183232e-004, 7.173705e-002, -7.943092e-003, 5.995923e-003, -3.467802e-002, 4.800925e-002, -9.859468e-003, 3.183814e-002, 9.929398e-002, -8.290080e-002, 6.689890e-002, -8.426838e-002, -7.094861e-002, -6.863510e-002, 7.441439e-002, 8.668422e-002, -4.226826e-002, -2.108628e-002, 6.299206e-002, -2.291862e-002, 1.526227e-002, -2.974613e-002, -2.011243e-002, -3.050758e-002, 1.312599e-002, 8.302053e-002, 6.471620e-002, -4.611077e-002, -3.533551e-017, 4.906433e-003, -1.220884e-002, -6.774281e-003, 3.890181e-003, 2.752987e-002, -3.844432e-002, -2.626492e-002, -7.546402e-002, 2.626492e-002, 3.844432e-002, -2.752987e-002, -3.890181e-003, 6.774281e-003, 1.220884e-002, -4.906433e-003, -7.898483e-004, 7.332408e-003, 5.194757e-002, -3.847877e-002, -2.583554e-002, 9.983577e-002, -2.253887e-003, 1.566831e-002, 2.069547e-002, -8.908555e-002, -6.796442e-002, 2.029381e-001, -3.575692e-002, -9.971868e-002, -8.350079e-002, 7.364830e-003, -4.943935e-003, 2.614043e-002, -1.499301e-002, -1.366457e-001, 5.180849e-002, -5.716051e-002, 4.154596e-002, 5.932214e-002, 2.729684e-002, -3.327579e-002, 2.601375e-002, -1.008900e-001, 3.112103e-002, 2.737514e-002, 1.554214e-002, -8.525090e-002, -2.801451e-002, -1.790247e-001, 4.819987e-002, -1.521254e-001, 3.101456e-002, -1.011747e-001, 3.983213e-002, -3.555044e-002, 4.501228e-002, 8.208715e-002, 6.999116e-003, -5.295141e-002, -4.871366e-002, -6.090141e-002, 6.283155e-002, 9.499680e-002, -9.861669e-003, 9.263149e-002, 1.997442e-002, 6.141042e-002, 2.282068e-002, -7.023163e-002, -1.359993e-001, -7.397531e-002, -2.052389e-002, -9.554464e-003, -8.894764e-002, -1.525575e-001, -7.790701e-002, 1.348376e-001, -1.692758e-002, -7.238158e-002, -6.778839e-002, -7.540296e-002, -3.563623e-003, 7.688254e-002, -5.364685e-002, 3.224943e-003, 5.098768e-003, 2.445539e-002, 4.040182e-002, 3.381245e-002, 8.815683e-002, 1.053593e-002, 3.496365e-002, 6.795567e-002, 5.313687e-002, 1.894772e-003, 1.015804e-001, 2.013133e-002, 6.593973e-002, 5.163958e-002, -1.141523e-001, -7.907067e-003, -2.169076e-002, -1.924793e-002, -3.750692e-002, -3.506996e-002, -5.481732e-002, -4.774233e-002, -6.334471e-002, 1.252464e-001, 5.633568e-002, -4.889674e-002, -5.167574e-002, 7.841619e-002, -9.684792e-003, 8.115963e-002, -1.599396e-001, 2.988053e-002, 1.532393e-002, -6.831098e-002, 7.206402e-003, 1.167603e-002, -2.214496e-002, -1.575108e-002, -1.193354e-001, 4.538008e-002, -6.902717e-002, 1.141828e-001},
{-1.142329e-003, -1.425432e-002, 2.143631e-002, 1.053228e-002, 4.903180e-004, -9.530844e-003, -9.441253e-002, 3.812244e-002, 9.476387e-002, 3.812244e-002, -9.441253e-002, -9.530844e-003, 4.903180e-004, 1.053228e-002, 2.143631e-002, -1.425432e-002, 3.630197e-004, -2.853869e-002, -6.517801e-003, -2.229265e-003, 2.777068e-002, 4.586280e-002, -7.389107e-003, -1.771588e-002, -2.920554e-003, 6.661751e-002, 1.481721e-002, -4.460056e-002, 1.279215e-001, -3.702020e-002, -6.510195e-003, 2.891754e-002, -3.518484e-002, -1.200732e-002, 1.586857e-002, 6.176665e-002, -4.956067e-002, -6.842391e-002, 1.203163e-001, 6.751655e-003, 1.254769e-001, -1.615374e-002, 8.085639e-002, -1.050937e-001, 1.008212e-001, -6.106901e-002, -2.339142e-002, -1.069351e-002, 1.258717e-001, 8.417335e-002, 6.878484e-002, -1.214338e-001, -1.164216e-001, 3.657074e-002, -7.784644e-002, 4.358814e-002, 2.451173e-002, 7.145984e-002, -5.011698e-002, -1.266009e-002, -6.569558e-002, -1.569908e-001, 1.761635e-001, 4.543613e-002, 1.197594e-001, 1.352160e-001, 1.287529e-001, -4.881358e-002, 2.019525e-002, 1.122987e-001, 6.489971e-002, -1.951065e-002, -8.601433e-002, -4.671994e-003, -1.574684e-002, 1.572383e-002, 1.053257e-002, -1.491840e-001, 5.536982e-003, 3.070963e-002, -9.085829e-002, 1.714570e-002, 1.243708e-001, -4.137917e-002, 2.152967e-002, -5.193547e-003, 9.981621e-003, -1.792990e-002, 2.841108e-002, -5.291793e-002, 1.045046e-002, -1.800002e-002, -6.846470e-002, -1.300463e-001, 1.272731e-001, 1.348102e-001, 9.880757e-002, 9.908141e-002, -6.670252e-002, -7.398051e-002, 8.290684e-002, -6.622895e-003, -5.765227e-002, 2.613281e-002,


© ISO/IEC 2004 — All rights reserved

Copyright International Organization for Standardization
Provided by IHS under license with ISO
No reproduction or networking permitted without license from IHS
Not for Resale

3.424248e-003, 1.835447e-002, -5.052739e-002, 3.468470e-003, 5.532809e-002, -1.290249e-001, 7.025465e-002, -1.264864e-002, -1.624871e-001, -2.909909e-002, 6.368544e-002, 5.354220e-002, -4.581909e-002, -3.414656e-002, 5.194863e-002, -1.074183e-002, -1.703585e-003, -1.291939e-002, 3.538877e-002, -5.195480e-002, -1.009575e-001, 5.965089e-002, 1.341114e-001, -5.213140e-002, -4.433293e-017, 2.384547e-003, -1.305530e-002, 3.550013e-002, -4.558857e-002, 6.057805e-002, -5.178663e-002, -4.625173e-003, -4.912095e-002, 4.625173e-003, 5.178663e-002, -6.057805e-002, 4.558857e-002, -3.550013e-002, 1.305530e-002, -2.384547e-003, 2.477293e-002, -4.735007e-003, -1.216704e-002, 2.221209e-002, -4.584411e-002, -3.304251e-003, 5.335379e-002, 1.247013e-002, -1.041655e-002, -3.031513e-002, 1.210365e-001, -1.380024e-001, 5.847594e-002, -1.092744e-001, 3.267155e-002, 5.278650e-003, -3.908114e-002, -4.645898e-002, 5.533253e-002, 1.492713e-002, -9.163035e-003, 1.912230e-002, -1.916784e-002, -3.328738e-002, -1.531204e-002, -4.143547e-002, -1.123503e-001, 2.705338e-002, 3.582168e-002, -1.407993e-002, 9.374793e-002, 3.568779e-003, -2.171190e-002, 1.346789e-002, 6.400286e-002, 1.369761e-002, -1.197359e-001, 1.036021e-001, -6.385645e-002, 3.631596e-002, 1.762748e-002, 1.235677e-002, -3.620232e-002, 1.439004e-001, -4.411552e-004, -7.980263e-002, 1.338624e-001, -4.340361e-002, -3.785872e-002, 3.758925e-002, -8.111448e-002, 1.321729e-003, -1.301677e-002, 2.284941e-004, 5.760159e-002, -2.945194e-002, -6.325303e-003, -3.948503e-002, 3.201874e-002, -1.569273e-002, -1.010202e-001, -2.591170e-002, -5.569183e-002, 1.917918e-001, 1.065559e-001, 1.079228e-001, -8.573457e-002, 3.886847e-002, -7.414080e-002, 4.510914e-002, -5.439317e-002, -7.893262e-003, 4.836005e-002, 1.072368e-002, -7.372791e-002, 6.150153e-002, -5.585735e-002, 3.338517e-002, 1.186208e-001, -6.962262e-002, -4.366030e-002, -2.497525e-002, 9.617912e-002, 2.490930e-002, -2.384642e-002, 5.736496e-002, 3.233954e-002, 3.567058e-002, -1.422120e-002, 5.323818e-003, 1.324667e-002, -2.432585e-002, -1.088416e-002, 5.823870e-002, 7.116997e-002, 1.607772e-002, 2.901738e-002, -1.359087e-002, 4.935223e-003, 9.605451e-002, -2.069507e-002, 1.783159e-002, 5.345290e-002, -4.026724e-003, 1.724503e-002, -2.669476e-003, 1.038131e-002, 4.821335e-003, -4.482788e-002, 6.247425e-002, -4.824464e-002, 1.475450e-002},
{1.719284e-003, -1.190496e-002, -8.817907e-003, 6.022576e-002, -5.163622e-002, -4.275642e-002, -2.042996e-003, 8.245692e-002, -6.067200e-002, 8.245692e-002, -2.042996e-003, -4.275642e-002, -5.163622e-002, 6.022576e-002, -8.817907e-003, -1.190496e-002, 8.624566e-003, 1.279489e-001, -2.702866e-002, -2.612040e-002, -1.664203e-002, 1.502114e-001, 1.381184e-002, -9.188922e-002, -7.100834e-004, -3.750245e-002, -8.721063e-002, 1.112199e-001, 1.930541e-002, 2.611287e-002, -2.599836e-002, 8.749184e-004, -1.076392e-002, 2.342262e-002, -9.146627e-003, 1.419604e-001, -1.031008e-001, -1.183642e-001, -3.845994e-003, 1.145038e-002, 7.393612e-002, -5.256139e-002, 7.978082e-002, -4.703375e-002, -2.324677e-001, 1.268169e-001, -3.205304e-002, -3.971425e-002, -7.505503e-002, 8.495600e-005, -1.245592e-001, 3.071794e-002, 6.285417e-002, 5.433631e-002, -2.402700e-002, 6.855450e-002, -1.095076e-001, 2.405606e-002, 1.687869e-002, -8.326555e-002, 3.900795e-002, 5.302372e-002, -1.194606e-001, 1.447621e-001, 1.781462e-002, -5.418285e-002, 1.021076e-004, 4.965802e-002, 4.551245e-002, -3.046589e-002, 3.672124e-002, -5.683676e-002, -5.839780e-002, -1.278533e-003, 5.937887e-003, 3.726359e-002, -7.169701e-002, 1.541124e-001, 5.511020e-002, -1.806896e-001, 3.853254e-002, -1.557448e-002, -5.462396e-002, 1.605121e-002, 6.044776e-003, 3.133698e-003, -7.345870e-003, 3.036047e-002, 2.909003e-003, -4.755929e-002, -2.141410e-002, -3.710725e-002, -2.773166e-002, 1.704548e-002, -9.868853e-002, 1.609912e-001, 1.520251e-001, -5.435269e-002, 7.184045e-002, -6.099237e-002, 8.586365e-002, -5.789343e-002, -9.267808e-003, 2.304257e-002, -3.054130e-002, 2.156605e-002, -2.432530e-002, -4.841753e-002, 3.202070e-002, -3.646445e-002, 5.131109e-003, -6.744253e-002, 5.318448e-002, -6.708740e-002, 8.134576e-002, 4.600688e-002, -8.557444e-002, 2.620889e-003, 1.882442e-002, 3.142402e-002, 2.133580e-002, -4.185996e-002, 6.623711e-002, 7.539971e-002, -1.700832e-001, 9.348343e-002, -8.649584e-002, 7.221578e-002, 7.967394e-017, 2.097416e-003, 1.723706e-002, -3.631367e-002, 3.072568e-002, 6.292713e-003, -4.502670e-002, 1.106292e-002, -5.000297e-002, -1.106292e-002, 4.502670e-002, -6.292713e-003, -3.072568e-002, 3.631367e-002, -1.723706e-002, -2.097416e-003, -4.698246e-003, -4.886072e-002, -6.972330e-003, -4.912710e-002, 6.896488e-002, 6.605415e-002, -5.224200e-002, 1.031250e-002, 7.498229e-002, 3.188801e-002, -8.180881e-002, 2.402548e-002, -8.033146e-003, -9.866231e-003, -2.699780e-003, 2.177477e-002, -3.010493e-003, 1.010022e-001, -1.017613e-001, -5.020412e-002, -1.053149e-001, 5.344878e-002, 8.045081e-002, -4.430077e-002, -2.548143e-002, -6.025353e-002, -1.190370e-002, 4.721615e-002, -7.358005e-002, 9.406742e-002, 4.509667e-003, -1.057627e-002, 6.810384e-002, -6.591325e-002, -8.680934e-002, 4.402243e-002, 4.680147e-002, -6.365732e-004, -4.108576e-002, -2.828788e-003, -1.390916e-002, -3.397782e-002, -5.768927e-002, 1.211168e-001, -6.661437e-002, -1.929434e-001, 2.847675e-002, 7.992773e-002, -9.989496e-003, -1.063301e-001, 5.453528e-003, -7.783166e-003, -1.179672e-002, -1.161272e-002, 1.096443e-003, -2.367569e-002, -2.530746e-002, -6.942347e-002, 7.932066e-002, -6.034075e-002, 8.297606e-002, -3.921262e-002, 5.410791e-002, 5.217329e-002, 3.303177e-002, -2.548875e-002, 7.916537e-002, -1.286910e-001, 2.365871e-002, 2.228022e-002, -7.518547e-002, 3.271904e-002, -5.553176e-002, 2.230343e-002, -8.837228e-002, -3.874152e-002, -3.290701e-002, -4.612584e-002, 9.156158e-002, 1.247355e-002, -5.851348e-003, 2.961454e-002, 8.635241e-002, -4.509045e-002, -6.416880e-002, 2.619908e-002, 5.197640e-002, -2.048941e-002, -

© ISO/IEC 2004 — All rights reserved


Copyright International Organization for Standardization
Provided by IHS under license with ISO
No reproduction or networking permitted without license from IHS
Not for Resale

1.701509e-002, -1.627091e-002, 6.396373e-003, 6.238647e-002, -5.243222e-002, -7.225494e-002, 6.879593e-002, -3.528104e-002, -1.376852e-001, 2.002535e-002, -5.976886e-002, 8.253651e-002, -3.991548e-002, 1.796310e-002, 3.038677e-002, 8.896901e-003, -7.000630e-003, -3.470803e-002, -7.411319e-003, 1.496044e-002, -7.856104e-003, 3.031478e-002, -2.922752e-002, 1.351020e-001},
{-8.579502e-005, -6.345608e-003, 1.854492e-002, 1.971856e-002, 1.127724e-002, -2.925899e-002, -2.696671e-002, 6.331668e-002, -7.703534e-003, 6.331668e-002, -2.696671e-002, -2.925899e-002, 1.127724e-002, 1.971856e-002, 1.854492e-002, -6.345608e-003, 1.057788e-002, -8.874849e-002, 3.834949e-002, 9.354653e-003, 2.068063e-002, 7.934701e-002, 5.917496e-002, -9.796051e-002, -3.923637e-003, -4.899358e-002, 3.724658e-002, 3.350093e-002, 2.568992e-002, -6.622125e-002, 4.141697e-002, 6.545486e-002, -2.074786e-002, -1.012106e-002, -4.895733e-002, -7.910259e-002, 7.469579e-002, -1.430286e-001, -2.991988e-002, 1.047850e-001, 2.514123e-003, -2.692180e-002, -9.905436e-004, -8.763465e-002, -4.566383e-002, 8.427449e-002, 2.804725e-002, -6.601969e-002, -9.791890e-002, 7.334492e-003, -1.946424e-002, -4.793392e-002, -1.911213e-002, 4.875703e-003, 8.419365e-002, 2.607700e-002, -8.612672e-003, 6.545790e-002, -2.174888e-004, -4.381108e-002, 8.745714e-003, 1.710531e-002, 1.031538e-002, -2.236521e-001, -9.463403e-002, 1.548297e-002, -1.077166e-001, 8.173194e-002, -1.064601e-001, 6.263439e-002, -2.333546e-002, 2.929937e-002, 1.272787e-002, 2.744762e-003, 3.722682e-003, 9.230092e-002, -4.721120e-002, 7.985543e-002, -2.065654e-002, -7.169060e-002, -2.167874e-002, 3.607972e-004, 7.732009e-002, 4.735508e-002, -3.123902e-002, -1.412822e-002, 7.496118e-002, -4.640289e-003, 2.753835e-002, -4.442207e-002, 4.995503e-002, -3.305461e-002, -1.211573e-001, -1.916560e-002, 1.100084e-002, 4.848236e-002, -2.111839e-001, 1.453466e-002, 3.245924e-002, 6.682456e-002, 1.064087e-002, 2.557503e-002, -6.317599e-002, 1.379300e-002, -2.462660e-002, 6.276541e-002, -4.017748e-002, 1.161601e-002, 4.989632e-002, 2.720210e-002, 7.965945e-002, -6.271097e-002, -1.351286e-002, -1.335917e-002, -5.844144e-002, 1.035848e-001, 3.424764e-002, -7.678344e-002, 1.213702e-002, -2.279179e-002, -1.244563e-002, -4.898280e-002, 5.418881e-002, -8.303523e-005, -2.111240e-002, -1.066897e-002, 3.860470e-002, 3.169807e-002, 2.452712e-016, -1.445900e-003, -2.524910e-002, 1.757884e-002, 2.053147e-002, -2.621670e-003, -3.872315e-002, 6.469262e-003, -1.270041e-001, -6.469262e-003, 3.872315e-002, 2.621670e-003, -2.053147e-002, -1.757884e-002, 2.524910e-002, 1.445900e-003, 3.146888e-003, -6.884323e-003, -9.604879e-002, 8.432138e-002, -1.825344e-002, -2.386938e-002, 5.397595e-002, -2.549736e-002, 6.779861e-002, -6.537141e-002, -5.166535e-003, -4.690831e-002, -3.303466e-002, 3.259320e-002, 3.015732e-002, 5.630628e-002, 2.019303e-002, 4.349895e-003, 1.759639e-002, 7.538177e-002, -8.402392e-002, 3.098169e-002, -2.788656e-002, 2.428247e-002, -2.842187e-002, -4.252980e-002, 7.300039e-003, 2.827068e-002, 6.589083e-002, 3.991478e-003, -4.502006e-002, -7.103921e-002, -1.905326e-002, -6.627885e-002, 3.773015e-002, 2.601206e-002, -7.901020e-002, 1.679170e-001, -9.600421e-002, 1.331275e-002, -9.720650e-002, -1.282125e-002, -1.581412e-001, 2.108334e-001, -1.304226e-001, -3.637798e-002, 2.110499e-002, -4.212406e-002, -5.528453e-002, 3.457057e-002, 5.178029e-002, -6.910699e-002, 5.471264e-002, -9.875834e-002, 7.107090e-002, -5.010515e-002, 4.380410e-002, -4.159124e-002, 9.196750e-002, -1.381196e-001, 5.356019e-002, -1.135262e-001, 1.092877e-001, -7.771479e-003, -5.417254e-002, -1.024573e-001, -3.083967e-002, 1.081341e-001, -9.428486e-002, -5.384468e-003, 4.047117e-002, -1.402147e-002, 7.651212e-002, 5.104639e-002, 2.350212e-002, -1.446001e-002, 4.220832e-003, 1.054949e-001, -2.207550e-002, -1.786681e-001, -1.357949e-001, -5.257639e-003, -2.575101e-002, -2.105754e-002, 5.284532e-002, -1.328301e-002, -5.680069e-002, 7.193309e-002, -5.443421e-002, 6.220526e-002, -2.129590e-002, 1.073093e-001, 3.276886e-002, -3.228579e-002, 5.720447e-002, -8.853725e-003, 3.161221e-002, -4.290235e-002, 1.563121e-001, -8.084831e-002, -9.449914e-002, 6.187946e-002, 3.655934e-002, -1.578928e-002, 2.275187e-002, -5.932686e-002, 6.317850e-003, 9.100970e-002, -1.323929e-001, -8.900605e-002, 1.369122e-001, 2.509605e-002},
{-1.535433e-003, -1.157114e-003, -5.974925e-003, 3.517806e-002, 2.742477e-003, -6.755682e-002, 1.734371e-003, 3.579845e-002, -7.429932e-002, 3.579845e-002, 1.734371e-003, -6.755682e-002, 2.742477e-003, 3.517806e-002, -5.974925e-003, -1.157114e-003, -9.466348e-003, 7.071964e-002, 1.490722e-002, -6.784825e-002, -8.403463e-003, -2.210918e-002, -6.836660e-003, 5.319952e-002, 7.531802e-002, -8.913688e-002, 6.696674e-002, 6.282630e-004, -8.656269e-002, 2.433618e-002, -1.561966e-002, -5.816135e-002, -6.534134e-003, -1.198729e-001, -3.205626e-002, 2.733555e-002, 8.660337e-002, 3.734707e-002, -9.879975e-002, -1.779522e-002, -4.369031e-002, -1.119394e-002, 3.711930e-002, -1.250867e-001, 5.201241e-002, 4.920510e-002, -1.573302e-002, 2.815466e-002, 8.554561e-002, 7.206087e-002, 7.859305e-002, -7.001915e-002, -7.750285e-003, -5.861999e-002, 7.551391e-002, -3.042425e-002, -1.020908e-001, 5.639883e-003, -2.853131e-002, -1.979467e-002, -2.654165e-002, -6.531336e-002, 9.649406e-002, 3.169025e-002, -1.425689e-002, 3.680783e-002, 1.242518e-003, -1.661383e-001, -1.903158e-002, -4.463300e-002, -9.278201e-002, 2.935202e-002, 4.080566e-002, 3.254120e-002, -5.412242e-002, 1.041573e-001, -3.313445e-004, -1.610176e-002, 1.158603e-001, 6.186398e-003, 5.432219e-002, -1.646612e-002, 1.369016e-001, 2.804863e-002, 6.033788e-002, -6.598038e-002, 1.689343e-002, 4.404969e-003, -4.882716e-002, -9.690701e-002, 6.710708e-002, -6.641452e-002, -8.102497e-002, 8.112412e-002, 5.836642e-002, -1.916448e-002, 3.627639e-002, 4.511367e-002, -2.848705e-002, -1.167206e-002, -6.324074e-002, 2.783138e-002, -3.469247e-003, 1.350641e-002, -


© ISO/IEC 2004 — All rights reserved

Copyright International Organization for Standardization
Provided by IHS under license with ISO
No reproduction or networking permitted without license from IHS
Not for Resale

2.107163e-004, 1.144458e-003, -2.701880e-002, -4.936508e-002, 2.541125e-003, -1.296819e-001, 2.239434e-002, 1.550826e-001, -1.201313e-001, -3.213535e-002, -1.120824e-002, 3.207641e-002, 2.275236e-003, -7.593398e-003, -1.109165e-002, -1.477633e-003, -6.228221e-003, 7.817401e-003, -3.564746e-002, 4.422359e-002, -6.399074e-002, 7.679302e-002, 2.002402e-002, -6.707346e-002, 2.344741e-017, 1.631069e-002, 1.424045e-002, -4.189440e-002, 2.574806e-002, -5.296183e-002, 6.084985e-002, -1.679071e-002, 3.810715e-002, 1.679071e-002, -6.084985e-002, 5.296183e-002, -2.574806e-002, 4.189440e-002, -1.424045e-002, -1.631069e-002, 2.865599e-002, -1.404718e-002, 1.153093e-001, -1.099315e-002, -8.357839e-002, 4.713635e-002, 5.325135e-002, -7.056838e-002, 9.565277e-002, -1.603781e-001, -8.941777e-002, 1.477644e-001, -9.642233e-002, 8.112565e-002, -6.022122e-002, 4.942274e-002, -3.457975e-002, -6.573834e-002, -9.005289e-002, 3.664592e-002, -2.018022e-002, -4.176924e-003, -7.166615e-002, 5.619938e-002, -1.221094e-001, 3.650201e-002, 5.833287e-002, 4.080279e-002, 8.996912e-003, -8.953376e-002, -3.881965e-002, -3.515772e-003, 5.041649e-002, 6.858704e-002, -4.643983e-002, 3.795236e-002, 7.160651e-002, 5.109288e-002, -1.662294e-002, -2.974182e-002, 3.572466e-002, -3.970893e-002, -1.202002e-001, 4.522459e-002, -9.250151e-002, -2.806659e-002, 9.970428e-003, 7.307900e-002, -1.038562e-002, 7.753512e-002, 6.468234e-002, 6.783471e-002, -1.217410e-001, 1.983423e-002, -7.583497e-002, -8.572387e-002, 1.318085e-002, -4.170216e-002, 4.296795e-002, 5.934357e-002, -1.034153e-002, 1.106093e-001, 3.614932e-004, -8.086391e-002, -5.963750e-002, -3.228747e-002, 9.203486e-002, 1.634759e-001, -6.366340e-002, -3.691449e-002, 1.110643e-001, 3.201458e-002, -3.179241e-002, 4.803675e-002, 9.419757e-003, -8.088266e-004, -2.788000e-002, 5.111973e-002, 1.107204e-001, 8.079769e-002, -1.003979e-001, 1.367503e-001, -1.057080e-001, -1.506181e-003, 1.530915e-001, -5.718480e-002, -6.236165e-003, 5.839362e-002, 6.072332e-002, 3.130091e-002, 1.561397e-003, -2.411367e-003, 8.484934e-002, 8.524834e-002, -6.286612e-002, 1.886462e-002, 4.530787e-002, -6.184130e-002, 6.042311e-002, 1.240356e-001, -6.851815e-002, 8.762817e-002, -3.885801e-003, -2.470669e-002, -2.520787e-002, -2.824428e-002, 1.595182e-002, 6.765476e-002, -5.711402e-002, 1.522170e-001, 1.874460e-002, -1.477805e-001},
{-1.538238e-003, 1.004770e-002, -1.977715e-002, 2.444620e-003, 4.926612e-002, -1.599084e-002, -1.814905e-002, -1.167457e-002, 8.302853e-002, -1.167457e-002, -1.814905e-002, -1.599084e-002, 4.926612e-002, 2.444620e-003, -1.977715e-002, 1.004770e-002, 7.551183e-003, -2.428936e-002, 3.130787e-004, 5.151111e-002, 9.098579e-002, -1.009755e-001, -7.224134e-002, 1.222589e-002, -4.045549e-002, -1.677052e-002, -3.712230e-002, -1.378861e-002, 1.317749e-001, -5.654081e-002, -4.807370e-002, 1.822884e-003, 5.200849e-002, 3.770975e-002, -7.269297e-003, 8.095839e-002, 3.469114e-002, 3.346984e-002, -1.684388e-002, -4.675975e-002, 2.425206e-002, -8.517439e-003, -3.398428e-002, -5.472237e-002, 1.422984e-001, 6.893817e-002, -5.600781e-002, 1.413381e-002, 4.449898e-002, 4.164515e-002, -2.191649e-002, -3.059613e-002, 7.762459e-002, 1.297588e-002, 3.859076e-002, 5.620011e-002, 1.005618e-001, 9.090456e-002, 4.741806e-002, -6.625004e-002, 9.411431e-002, -1.952851e-001, -1.779362e-001, 8.858831e-002, 5.435102e-002, -3.060541e-002, -8.642450e-002, -1.628744e-002, 9.596574e-002, 7.840651e-002, -5.908674e-002, 5.490534e-003, -1.280310e-003, 3.282043e-002, -1.327807e-001, 1.344528e-001, 1.101392e-001, 3.371070e-002, -5.776564e-002, -1.738808e-002, -7.181409e-002, 1.002889e-001, -1.138800e-001, -5.721098e-002, -2.027009e-002, 8.425078e-003, -3.492670e-002, 1.827090e-002, 2.537409e-002, -8.256653e-002, 4.235910e-002, -1.119083e-002, -8.129646e-002, -5.056681e-002, -1.649008e-001, 1.211275e-001, 5.982683e-002, 1.502108e-002, -1.126784e-001, 5.155322e-002, 4.482757e-002, -6.672769e-002, 6.949680e-002, 7.439844e-003, 9.166620e-003, -1.606494e-002, -4.007516e-002, -5.235666e-002, -3.217231e-002, 1.386074e-001, -2.219408e-002, -1.914302e-003, -2.185688e-002, -1.541623e-002, -6.839896e-002, 2.104805e-002, -4.330875e-002, -9.238904e-003, 3.435744e-002, 3.675675e-002, -8.918914e-003, 3.329298e-002, 2.577019e-002, -1.275774e-001, 2.400667e-002, -1.580492e-002, 5.076299e-002, 3.330056e-002, 1.249498e-016, -9.112425e-003, 5.314854e-003, 1.784817e-002, -4.373662e-002, 3.633501e-002, 5.336254e-003, 9.698066e-003, -5.123321e-002, -9.698066e-003, -5.336254e-003, -3.633501e-002, 4.373662e-002, -1.784817e-002, -5.314854e-003, 9.112425e-003, -2.602029e-002, 1.550544e-002, -2.362395e-002, 4.064733e-002, -2.217675e-002, -7.628078e-002, 3.942431e-002, 7.583431e-002, -8.107212e-002, 9.774743e-003, 1.257117e-001, -3.579784e-002, 2.932712e-002, -6.795081e-002, -2.676304e-002, -7.049205e-003, 1.946535e-002, 6.766128e-002, -9.022171e-002, -2.241438e-002, -1.861974e-002, -6.083304e-002, 1.375748e-001, -4.236344e-002, -1.110765e-002, 3.978634e-003, 8.508107e-002, -1.738151e-001, -1.258150e-001, 9.163647e-002, 1.161886e-001, 1.760724e-002, 1.195856e-002, -5.378465e-003, -6.923939e-002, 9.432629e-002, -8.829092e-002, 1.027439e-001, -2.342282e-002, -1.447622e-002, -2.791367e-002, -6.314935e-003, -8.972718e-002, 1.028192e-001, -9.270165e-002, -1.875345e-003, 4.904506e-002, 5.177302e-003, 2.829986e-002, 6.727001e-002, -1.992689e-001, -8.960749e-002, -5.387787e-002, 6.350238e-002, -6.798567e-002, -3.747598e-002, -5.991058e-002, 4.679605e-002, 3.105695e-002, 6.129486e-002, -9.747562e-002, 7.383741e-002, -3.730432e-002, 8.097255e-003, -6.150740e-002, 1.617084e-002, -1.096599e-001, 1.561037e-001, 4.087783e-002, 2.891819e-002, 3.506324e-002, -1.663064e-002, 1.171326e-001, -7.257684e-002, 5.921154e-002, -3.136303e-002, -5.246420e-002, 1.390351e-001, -1.310199e-002, 4.007679e-003, 6.693794e-002, -5.047022e-002, -9.899070e-002, 4.800572e-002, -1.178269e-002, 1.606561e-002, 1.112429e-002, 1.982721e-004, -

© ISO/IEC 2004 — All rights reserved


Copyright International Organization for Standardization
Provided by IHS under license with ISO
No reproduction or networking permitted without license from IHS
Not for Resale

2.716616e-002, 5.453667e-002, -8.139685e-002, 2.330128e-002, 1.716458e-003, 6.595748e-002, -4.157167e-002, 4.307121e-002, 3.281342e-002, -7.218797e-002, 1.647769e-002, -5.059831e-002, 8.304017e-002, -1.487191e-003, -1.011004e-002, -1.413861e-002, -1.302092e-002, 1.081452e-002, 7.722559e-003, 6.652643e-002, -1.791572e-002, -7.973342e-002, 2.109938e-003, -7.332406e-002}, {2.730851e-003, -3.903879e-003, 9.816443e-003, 2.850631e-003, -4.177370e-002, 4.465961e-003, 5.555394e-002, -3.245882e-002, -3.556247e-002, -3.245882e-002, 5.555394e-002, 4.465961e-003, -4.177370e-002, 2.850631e-003, 9.816443e-003, -3.903879e-003, 2.304257e-003, 3.220305e-002, -3.745256e-002, -2.891984e-002, -1.388631e-002, -4.441362e-002, 1.180799e-001, 2.236815e-002, -7.597631e-002, 9.926215e-002, -7.238703e-002, 4.754253e-002, -2.196586e-002, 4.214464e-002, -8.996777e-003, -2.766256e-002, 3.394058e-003, -1.658594e-002, 7.068208e-002, 1.110819e-002, -2.012519e-001, 1.041563e-001, -8.825064e-002, 4.929069e-003, 2.270635e-002, -6.094026e-002, 6.115652e-002, 5.242544e-002, -1.814627e-001, 3.672267e-002, 2.990617e-002, -3.190798e-002, 2.819883e-002, -1.078328e-001, 8.746574e-002, -6.357195e-002, -1.580217e-002, 2.324418e-002, 6.586532e-002, 1.403043e-002, -7.924067e-002, -1.483830e-002, 1.291619e-001, -1.174430e-001, -1.293883e-001, 3.241235e-002, -1.715178e-002, 1.273554e-001, 9.201777e-003, 9.854032e-002, -5.362683e-002, -6.841080e-003, 1.291688e-002, -4.485259e-002, 3.424385e-002, -7.462680e-002, -1.937760e-002, 8.363351e-002, -1.386657e-002, 8.042164e-003, 2.581008e-002, 3.600911e-002, -2.915858e-004, -1.703004e-001, 8.261385e-002, -6.668199e-002, 1.068467e-001, -5.175754e-002, -9.600798e-002, 9.849391e-002, -5.492241e-002, 3.760820e-005, 1.780167e-002, -2.090603e-002, -4.615640e-002, 1.030069e-001, -2.160795e-002, -1.025511e-001, -4.522391e-002, 1.708341e-001, -9.999180e-002, 8.428439e-002, -8.905455e-002, -4.072995e-002, 6.032807e-003, -3.562259e-002, -1.080376e-001, -2.215557e-002, 8.993546e-003, -2.094154e-002, 6.442993e-002, 6.574805e-002, -9.270057e-002, 4.381026e-002, -2.521769e-002, -3.593228e-002, 1.662338e-002, 3.781940e-002, -6.457193e-002, -8.532689e-002, -5.442453e-003, -2.802206e-002, 3.303094e-003, -4.093698e-002, -2.058421e-002, -1.039573e-002, 3.243996e-002, 3.471858e-003, 3.381323e-002, -1.025293e-002, -7.423274e-003, 4.250997e-002, -6.615429e-018, 3.135773e-003, 1.458855e-002, -4.285530e-002, 2.341033e-002, 2.255080e-002, 8.599515e-003, -5.726580e-002, 5.172259e-003, 5.726580e-002, -8.599515e-003, -2.255080e-002, -2.341033e-002, 4.285530e-002, -1.458855e-002, -3.135773e-003, 9.763651e-005, -3.759534e-002, 5.128852e-002, 4.306468e-002, 8.220220e-002, -1.286738e-001, -4.652872e-002, 5.551870e-002, 1.181430e-001, 7.638433e-002, -1.391601e-001, -3.966302e-002, 6.430860e-002, -5.048991e-002, -1.332474e-002, 3.082867e-002, 2.513631e-002, 1.204766e-001, -2.960161e-002, -1.918441e-002, 7.130326e-002, 6.725765e-002, -2.193734e-002, -1.283111e-002, 6.520639e-002, -4.536798e-002, -2.870904e-002, -1.180983e-001, 1.613361e-001, 2.853540e-002, 7.161458e-002, -1.349823e-001, -1.635895e-002, -3.289663e-002, -4.606928e-003, 6.935096e-002, -9.889753e-002, -3.465726e-002, -2.631158e-002, 3.463333e-002, -1.160965e-002, 3.912746e-002, 1.194940e-002, -5.742725e-002, 8.168437e-002, -7.457209e-002, 3.516845e-002, 1.009886e-001, -4.393423e-002, -1.389599e-001, 8.278207e-003, 7.856386e-002, 1.331394e-001, -5.252726e-002, 3.728416e-002, -2.907349e-002, -3.541627e-002, 2.095489e-002, -8.983322e-002, -9.328296e-002, 3.539952e-002, 1.290575e-002, -1.050216e-002, 1.784964e-002, 3.028383e-002, 1.231637e-002, -5.501807e-002, 1.297191e-002, 7.394480e-002, -8.690322e-002, -3.716789e-002, 1.113526e-002, 3.703405e-002, 1.728392e-002, 4.677963e-002, -8.808868e-002, 6.963183e-002, 3.242940e-002, -1.680808e-001, 1.422932e-001, -7.749706e-002, -5.696569e-002, -1.059002e-001, 3.532632e-002, 1.122312e-002, -7.569375e-002, -4.998534e-002, 4.390451e-002, -1.672480e-002, 3.127648e-002, 4.413465e-003, 1.864079e-003, -1.768112e-002, 7.074373e-002, 1.077389e-002, -3.610836e-002, 1.576011e-001, -1.084195e-001, 2.150601e-002, -6.500924e-002, 3.277010e-003, 4.371790e-002, -1.886128e-002, 1.196712e-002, -9.594199e-005, -1.202504e-002, -9.253847e-003, -1.065430e-003, -7.960230e-003, 1.056791e-002, -4.224179e-002, 1.476258e-002}, {1.955953e-003, -5.915721e-004, 1.901572e-002, -2.533443e-002, -2.581149e-002, 4.660633e-002, 3.259414e-002, -6.568404e-002, -1.365362e-002, -6.568404e-002, 3.259414e-002, 4.660633e-002, -2.581149e-002, -2.533443e-002, 1.901572e-002, -5.915721e-004, -6.939097e-003, -2.245091e-002, 1.017634e-002, -1.052351e-001, 1.088316e-001, -5.005632e-004, -1.260485e-001, 4.677913e-002, 3.271831e-002, 3.488250e-002, 1.187487e-002, -1.375034e-001, -7.813138e-002, -2.523627e-002, 6.253064e-002, -6.015726e-002, 5.373136e-002, 6.418524e-003, -4.676135e-002, 4.161035e-002, 7.571746e-002, -5.760685e-002, 7.200858e-002, -3.214020e-002, -5.823667e-002, -9.642162e-002, -5.343814e-002, -1.191224e-003, 1.411880e-002, 1.153209e-001, -8.354239e-003, 5.036253e-002, -3.757135e-002, 6.491620e-002, -4.431706e-002, 8.369254e-002, -3.773738e-002, -6.180623e-002, 2.466682e-003, 2.736993e-002, 3.776757e-002, 4.695362e-002, 2.349653e-002, 7.963337e-002, 3.575229e-002, -2.428035e-002, 4.078818e-003, 1.554195e-002, 4.341683e-002, 8.730739e-002, -1.627970e-003, -8.280460e-002, -9.067497e-002, 4.096531e-002, -5.321667e-002, -3.436236e-002, -1.935215e-002, -3.153854e-002, -1.680817e-002, -6.785829e-002, -2.625945e-002, 7.108965e-002, 5.524334e-002, -4.365248e-002, 1.680751e-001, 5.278233e-002, -5.996515e-003, -1.473029e-001, 1.734254e-001, 1.238046e-002, -5.559815e-002, 3.314963e-002, 3.407950e-003, -2.308001e-002, -5.137048e-002, 8.747279e-002, -3.241259e-002, -1.796624e-001, -6.404417e-002, 1.055957e-001, -6.409623e-002, 2.349511e-001, 4.047409e-002, -7.912735e-002, 6.899283e-002, -7.495907e-002, 5.759257e-002, -7.089038e-003,


© ISO/IEC 2004 — All rights reserved

Copyright International Organization for Standardization
Provided by IHS under license with ISO
No reproduction or networking permitted without license from IHS
Not for Resale

3.068489e-002, -4.159332e-002, -1.136645e-002, 8.780696e-003, -8.545416e-003, -4.078581e-003, 1.637467e-004, 1.442324e-001, -7.692010e-002, -3.455569e-002, -9.428527e-003, 7.114295e-002, -3.843384e-002, -1.001778e-002, 2.676498e-002, 3.258533e-002, -1.589470e-002, 3.078910e-002, 2.363568e-002, -1.148119e-001, 2.483417e-002, 6.248403e-002, 4.856698e-003, -4.387944e-004, -1.605263e-017, 1.199598e-002, -3.920332e-003, -5.089971e-003, -1.247628e-002, 1.349073e-002, -2.729128e-002, 3.548450e-002, 2.172525e-002, -3.548450e-002, 2.729128e-002, -1.349073e-002, 1.247628e-002, 5.089971e-003, 3.920332e-003, -1.199598e-002, -2.557481e-003, -4.696182e-002, 4.086122e-002, -1.991118e-002, 1.231095e-002, 4.064796e-002, -1.023550e-001, -6.028800e-002, -1.456193e-002, 1.096605e-001, 4.540026e-002, -7.792735e-002, 4.105575e-002, -8.685774e-002, -3.553810e-003, 1.477242e-002, 1.896491e-002, 3.008184e-002, 3.149366e-002, -5.551432e-002, -4.222678e-002, -6.040722e-002, 9.052956e-002, -7.496196e-002, -8.936437e-002, -9.412081e-002, 2.026554e-002, -1.209709e-002, -1.280987e-003, -5.074766e-002, -4.454071e-002, 7.580248e-002, 6.408731e-004, 6.362823e-002, 2.334885e-002, -2.153706e-002, 1.968411e-002, 1.669932e-002, 4.395338e-002, 6.984712e-002, -4.314823e-003, 7.379376e-003, 1.462801e-003, 1.148073e-002, -1.181388e-001, 6.907017e-002, 8.597388e-002, 1.435731e-002, -2.000680e-002, -1.872915e-003, 1.107954e-001, 7.022423e-003, -5.170566e-002, 6.772089e-002, -1.192701e-001, -8.596466e-002, -1.743546e-002, 2.419227e-002, -1.199942e-002, 1.605592e-001, -3.953273e-002, -8.490010e-002, 6.839164e-002, 4.500143e-002, 6.965390e-002, -5.263374e-002, 9.921837e-002, -6.060020e-003, -1.686933e-001, -1.706284e-002, -2.770582e-002, -5.879731e-003, -4.208604e-003, -7.526939e-002, 4.757789e-003, 1.569642e-002, -1.169065e-001, 5.330709e-003, -6.858930e-002, 1.235326e-001, 3.470457e-002, -9.098873e-002, 1.450725e-002, 8.930968e-002, -6.443582e-002, 1.343633e-002, -8.528367e-003, -2.427254e-003, 5.516388e-002, 9.537501e-003, -4.331320e-003, 8.599017e-003, -5.361321e-002, 1.903074e-001, -7.326784e-002, -2.863801e-002, -2.772378e-002, -1.349450e-001, 1.742268e-001, -5.950455e-002, 8.555848e-002, -2.956964e-002, 2.909224e-002, -1.659828e-002, -3.397363e-002, 3.237145e-002, -3.012361e-002, 1.452768e-002, 5.468979e-002, -9.513140e-002, 1.287089e-001, -3.550430e-002},
{-1.715708e-003, 1.048322e-003, -5.220066e-003, -7.587368e-004, -7.708903e-003, 5.307159e-002, -3.289375e-002, -8.401307e-002, 1.574333e-001, -8.401307e-002, -3.289375e-002, 5.307159e-002, -7.708903e-003, -7.587368e-004, -5.220066e-003, 1.048322e-003, -1.340183e-002, -1.193022e-002, -4.831683e-002, -5.126839e-002, 5.496704e-002, 6.524427e-003, -8.131660e-002, 7.259095e-002, -2.543378e-002, 4.303514e-002, -6.358922e-002, -1.603511e-002, 1.188668e-001, -1.013882e-002, -3.932953e-002, -3.912010e-002, 2.462937e-002, 3.188718e-002, -5.707830e-002, -6.021962e-002, -4.879696e-003, -2.172563e-003, -3.000443e-002, -1.299131e-003, 4.439096e-002, -4.711310e-002, -6.726801e-002, 5.683088e-002, 1.758927e-002, 9.764106e-003, -5.954404e-002, -2.594968e-002, 6.480432e-002, 4.399833e-002, -5.925843e-002, -1.256052e-003, 4.628634e-002, -7.306126e-002, 6.429226e-002, 2.765499e-002, -1.890738e-002, 1.315956e-002, -4.193275e-002, -5.805245e-002, 4.709466e-002, -5.543427e-002, -5.896869e-002, 9.457681e-002, 1.069886e-001, 1.843554e-001, -1.372381e-001, -3.687480e-002, 1.608693e-002, -2.278682e-002, -3.970105e-002, -6.520031e-002, -3.041235e-003, 2.164362e-002, 6.590518e-002, -1.409373e-001, 1.361579e-002, 1.348944e-001, -1.504276e-001, -4.880967e-002, -1.312068e-002, 1.106277e-002, -1.810891e-002, 4.526722e-002, -5.413509e-002, -1.850386e-002, 2.492837e-002, 1.037200e-001, 2.853670e-002, -3.339358e-002, 8.133565e-003, -2.051176e-002, -2.475296e-002, 3.972502e-002, 1.260557e-002, 3.349484e-002, 1.368777e-001, 2.840107e-002, 6.882999e-002, 4.795110e-002, 3.325644e-003, 3.773815e-002, 9.369354e-002, 2.832672e-002, -6.526134e-002, 6.006727e-002, -4.930368e-002, 3.860915e-002, -7.727132e-002, 7.129904e-003, -2.171640e-002, -2.054578e-002, -1.394630e-002, -1.205144e-001, 9.402433e-002, 2.626347e-002, 4.385610e-002, 2.910375e-003, -1.267078e-002, -3.546238e-002, 4.466013e-003, -2.560896e-002, 1.533998e-003, 1.349239e-002, -5.079005e-002, -1.364776e-002, 5.280502e-002, -6.383447e-003, 4.747354e-017, 4.659470e-003, 3.212394e-003, -3.445938e-002, 2.567670e-002, 3.728082e-002, -6.316412e-002, -1.727096e-002, -1.115226e-001, 1.727096e-002, 6.316412e-002, -3.728082e-002, -2.567670e-002, 3.445938e-002, -3.212394e-003, -4.659470e-003, -2.381683e-003, -3.525477e-002, 2.931585e-002, -5.547687e-002, -6.163001e-002, 3.327333e-003, -1.580415e-002, -2.212107e-002, 1.893787e-002, 3.656984e-002, 2.464124e-002, -6.877987e-002, 4.668263e-002, 7.696870e-002, -1.157457e-002, 3.632505e-002, -4.596524e-002, 1.824525e-003, -5.757117e-003, 4.851663e-003, 1.113951e-001, -6.172994e-002, -3.893390e-002, 4.248756e-003, 7.244156e-002, -7.283040e-002, -8.905044e-002, 1.258195e-002, 2.735088e-001, -7.493871e-002, -8.329139e-002, -7.575633e-002, -1.611548e-002, -8.478434e-002, 4.230269e-002, 6.549787e-002, 3.529884e-002, -1.227645e-001, -3.475599e-002, 1.725706e-002, 3.689381e-002, 9.537947e-002, -1.324643e-003, -4.494012e-002, 4.547290e-002, 6.258868e-002, -1.301688e-001, 1.073010e-001, 1.598304e-001, 8.047236e-002, -1.476271e-002, -2.627772e-002, -3.285276e-002, 4.691561e-002, -8.833717e-003, 3.502185e-002, 5.651070e-002, 1.936902e-002, -4.349317e-003, -5.411685e-002, 4.416699e-003, -1.432656e-001, 6.360547e-002, -5.559789e-002, 1.551421e-001, 4.236037e-002, 1.329286e-001, 4.386983e-002, -9.885005e-002, 4.599237e-002, 1.144882e-001, 1.306366e-002, 4.991502e-002, -2.517669e-003, 2.022704e-002, 4.069122e-002, -3.597311e-002, -8.266530e-002, 9.571173e-003, 1.106696e-001, 3.963516e-002, -4.521358e-002, 2.258549e-001, -1.287140e-001, 1.106985e-001, -2.206608e-003, -1.599514e-002, 1.862013e-002, -

© ISO/IEC 2004 — All rights reserved


Copyright International Organization for Standardization
Provided by IHS under license with ISO
No reproduction or networking permitted without license from IHS
Not for Resale

1.794519e-002, 2.587870e-002, 7.058429e-002, -4.654604e-002, 5.302506e-002, -8.749339e-002, 5.235499e-002, 3.401293e-002, -1.884758e-002, -2.083235e-002, 4.846680e-002, -4.220319e-002, 5.146348e-002, -3.190315e-002, -2.713567e-002, 4.705289e-003, 3.716768e-003, 5.547853e-002, -5.449820e-002, 5.840629e-003, 8.594718e-002, -5.529658e-002, -4.388007e-002, 1.339862e-001},
{-3.535138e-003, 9.096945e-003, -4.197742e-003, -5.235500e-002, 8.052909e-002, 5.547664e-002, -6.690474e-002, 1.771496e-002, -1.840213e-002, 1.771496e-002, -6.690474e-002, 5.547664e-002, 8.052909e-002, -5.235500e-002, -4.197742e-003, 9.096945e-003, -1.311371e-002, -2.494368e-002, 3.535373e-002, -5.116004e-002, -3.692025e-002, -6.100601e-002, 8.991670e-002, 8.569974e-002, 3.890105e-002, 7.657936e-002, 4.137026e-003, 3.956973e-002, -6.015499e-002, -6.612821e-002, -9.055607e-003, -3.907069e-002, 3.738970e-002, 5.168797e-002, 1.905178e-001, 9.228222e-003, 1.416036e-002, -5.417996e-002, -5.145723e-003, 9.022311e-002, 4.649566e-002, 1.969859e-002, 6.028708e-002, -6.268982e-002, -6.429709e-003, 6.032695e-002, 5.037922e-002, 3.197364e-002, 2.223096e-002, 2.948862e-002, 2.061352e-002, -4.891506e-002, -1.857321e-002, -1.305319e-002, 6.548181e-002, 5.984854e-002, 8.628686e-003, 5.594354e-002, 9.530342e-002, -1.574024e-002, -6.682679e-002, -1.682945e-002, 1.355185e-001, -3.193992e-003, 3.355742e-002, -3.126403e-002, -2.137045e-002, 1.437179e-001, -3.489526e-002, -2.586343e-002, -4.043584e-002, 2.149749e-002, 8.930529e-003, 4.366611e-002, -1.196357e-001, -1.280509e-001, 5.074496e-002, 6.302157e-002, 1.002206e-001, -8.574617e-002, -5.674313e-002, -6.485124e-002, 4.269467e-002, 4.908754e-002, -1.270237e-001, 9.746871e-002, 4.141062e-002, 2.128680e-002, 2.420290e-002, 1.869855e-002, 1.064304e-001, 6.875444e-002, -1.007570e-001, 2.630132e-002, 8.434733e-002, 5.272154e-002, 1.188925e-001, -1.757939e-001, 9.576464e-002, -5.742763e-002, -2.019158e-002, 7.818879e-003, 6.580389e-002, 4.440970e-003, -2.679762e-002, 3.029261e-002, 3.351131e-002, 6.407931e-002, 5.990618e-002, -1.157502e-001, 7.577935e-002, -5.704223e-003, 1.180571e-001, 9.776291e-003, 7.297863e-002, -2.537292e-002, 1.045695e-002, 5.455863e-002, -8.820003e-003, 1.247203e-002, 1.296651e-002, -1.341301e-002, -6.346782e-002, -3.410351e-003, 5.378890e-002, -2.569409e-002, 3.547362e-002, 8.494248e-002, 1.751733e-016, -1.400228e-003, 2.187758e-002, -3.558999e-002, 9.223873e-003, 3.424041e-003, 2.663374e-002, -1.142026e-002, -1.241639e-002, 1.142026e-002, -2.663374e-002, -3.424041e-003, -9.223873e-003, 3.558999e-002, -2.187758e-002, 1.400228e-003, -1.850115e-002, -2.669411e-002, 1.198065e-002, 7.451170e-002, 1.163463e-002, -7.480847e-002, 6.915810e-002, -2.251069e-002, 4.464803e-002, -3.436816e-002, -4.803466e-002, 7.962954e-002, -3.164233e-002, 5.232151e-002, -2.576440e-002, 5.355360e-002, 2.190928e-002, 3.168545e-002, 3.869697e-002, 1.814134e-001, -1.537539e-001, -3.267982e-002, 3.493680e-002, 9.366135e-002, -9.511207e-002, -5.865038e-002, 6.101263e-002, -7.132071e-002, -9.537810e-002, 9.756403e-002, 6.845203e-002, -5.285965e-002, -3.870595e-002, -1.054048e-001, -6.014847e-002, 4.374877e-002, 8.943202e-003, 4.161406e-002, -3.857597e-002, 1.861085e-002, -3.513115e-002, -5.572509e-003, -4.176593e-002, -1.238333e-002, 1.050950e-001, -8.043117e-002, 4.396862e-002, -4.804713e-002, 1.053669e-001, 8.092192e-002, -7.377347e-003, -7.484346e-002, -1.171024e-002, -5.883967e-002, 1.088793e-001, -5.881413e-002, -5.676158e-002, -2.669874e-002, 3.945289e-002, -5.599537e-002, -1.749251e-002, -8.815898e-002, 3.506931e-002, 7.051643e-002, 1.190846e-002, -1.234751e-001, -1.333906e-001, -4.029268e-002, 2.435532e-002, 1.882037e-002, 3.297467e-002, 4.124541e-002, -5.186059e-002, -8.104148e-003, 7.796463e-002, 9.658153e-002, 1.787444e-002, -1.393773e-001, -3.252653e-003, -1.361481e-001, -8.783891e-003, 9.684780e-002, 3.592958e-002, -8.398427e-002, -1.886414e-002, 5.620279e-002, -8.741574e-002, -7.730228e-003, -5.473565e-002, -6.363768e-002, -1.214366e-001, -8.169034e-002, 4.694788e-002, -1.782097e-002, 4.157184e-002, 3.876327e-002, 3.530444e-003, 1.063121e-001, -1.698738e-001, 4.513047e-003, 2.509028e-002, 6.173556e-002, 3.302840e-002, -5.944174e-002, -4.662610e-003, -4.389096e-002, 1.688611e-002, -1.335432e-002, -7.950774e-003, 3.047801e-002, -1.227401e-001, 1.153796e-001},
{-3.960004e-004, 1.623809e-002, -1.643016e-002, -3.143455e-002, 1.904710e-002, -2.659447e-002, -2.621406e-003, -6.669532e-003, -2.753176e-002, -6.669532e-003, -2.621406e-003, -2.659447e-002, 1.904710e-002, -3.143455e-002, -1.643016e-002, 1.623809e-002, 8.569735e-003, -7.655607e-002, 2.554910e-002, 4.182461e-002, -1.036383e-001, 6.711640e-002, -4.094618e-002, 6.906538e-002, 5.712202e-002, -2.573396e-004, -1.685297e-002, -4.876088e-002, 8.029777e-003, -6.099063e-002, 6.822129e-002, 5.960262e-002, 6.055380e-002, 1.191000e-001, 1.898250e-002, -3.132391e-002, -3.538231e-002, 9.856028e-002, 1.005797e-002, -5.877078e-002, 3.512236e-002, -2.922504e-002, 2.986915e-002, -4.935689e-002, 6.374498e-002, 6.707516e-002, 2.670180e-002, -2.317746e-002, 4.707589e-002, 4.773996e-002, -1.278036e-002, -7.934924e-002, -1.244382e-001, 1.453000e-002, -4.149254e-003, 2.324415e-002, -5.178951e-002, 7.007412e-002, 4.548039e-002, 8.627174e-002, 7.894723e-003, -7.079345e-002, 1.748158e-002, -1.196125e-001, -1.201598e-001, 4.186912e-002, 8.198600e-002, -1.483783e-002, 7.413369e-002, -8.350894e-002, 2.593416e-002, -1.601836e-002, -1.155872e-002, -4.228818e-002, -3.782111e-002, 6.900972e-002, 4.086168e-002, 5.592290e-002, 1.614247e-002, -1.892009e-001, 6.287738e-003, -7.902202e-002, 8.861781e-002, -4.117170e-002, -6.627204e-002, 2.211097e-002, 2.502879e-002, -6.907812e-003, 7.229073e-003, -6.153109e-002, -1.631133e-002, -1.382466e-002, -1.325852e-001, -3.062618e-002, 5.762629e-002, 9.350562e-002, -5.304051e-002, 6.170705e-002, 5.629059e-002, -7.009452e-002, 1.285864e-001, -8.085529e-002, -1.309765e-002, 7.055645e-002, -


© ISO/IEC 2004 — All rights reserved
--`,,```,,,,````-`-`,,`,,`,`,,`---

Copyright International Organization for Standardization
Provided by IHS under license with ISO
No reproduction or networking permitted without license from IHS
Not for Resale

1.004584e-002, 4.779247e-003, -2.039450e-003, -1.085619e-001, 4.159328e-002, 5.679482e-002, 9.935888e-002, -1.676650e-001, -1.051789e-001, -5.096954e-003, 4.400044e-002, 4.984052e-002, -2.764186e-002, -3.236395e-002, -2.978192e-002, -1.158253e-002, 9.319815e-003, 1.162076e-002, 1.130014e-003, -1.181281e-003, -4.551765e-002, -5.444971e-002, -8.694902e-003, 1.415517e-001, 4.208165e-017, -6.141879e-003, -1.189230e-002, 2.265017e-002, -5.637168e-002, 4.178187e-002, 9.973526e-003, -2.919109e-002, 1.219613e-002, 2.919109e-002, -9.973526e-003, -4.178187e-002, 5.637168e-002, -2.265017e-002, 1.189230e-002, 6.141879e-003, 8.899213e-003, 3.917123e-002, -8.030312e-003, 9.636087e-002, -1.115635e-001, -2.237119e-002, -8.302015e-002, 3.150051e-002, 8.532726e-002, -9.534076e-004, -1.538317e-001, -4.450811e-002, 6.474226e-002, 1.019506e-001, 7.601131e-002, -5.546216e-002, -4.009888e-002, -1.236676e-001, 7.591963e-002, -4.599461e-002, 5.365668e-002, 1.192002e-001, -6.084639e-002, -3.205095e-002, -4.694697e-002, 5.864071e-003, 3.038873e-002, 3.648338e-002, 1.656522e-003, -2.907770e-002, -6.130764e-002, 1.236098e-001, 6.085508e-002, -6.356627e-003, -8.641567e-004, -1.828871e-002, 9.632869e-003, 5.954972e-002, 1.365890e-002, -3.496676e-002, 3.011827e-002, -2.483584e-002, -5.288415e-003, 1.077687e-001, -1.671472e-002, -3.783541e-002, -1.674059e-001, -2.595622e-002, -1.008215e-001, -1.631379e-001, 2.535891e-003, 8.599802e-002, -2.768796e-002, 9.461344e-002, -2.995432e-002, -5.120388e-002, -1.357211e-002, -2.528603e-002, -2.609475e-002, -8.221666e-003, -5.967125e-002, 5.805725e-002, -1.167639e-001, 1.679657e-001, 6.462155e-002, -3.791235e-002, 1.290507e-001, -1.635051e-001, 3.252111e-002, 8.988512e-002, -1.805270e-002, 1.689235e-002, -2.093872e-002, 4.426736e-002, 1.944261e-003, -5.102538e-002, 3.121335e-002, 5.768187e-002, -5.001429e-002, 5.737485e-002, -4.787083e-002, 5.021759e-003, 1.702349e-002, 2.489821e-002, 1.014919e-001, -6.381986e-002, 5.017555e-002, -3.387686e-002, 3.050648e-002, -1.026811e-002, 1.555835e-002, 1.983966e-002, 8.303876e-002, -1.051614e-001, -5.216921e-002, 8.279018e-002, -1.416895e-002, -3.924501e-002, 4.537997e-002, -9.703042e-002, 8.804513e-003, 3.766922e-002, -5.377489e-002, 3.905675e-002, -1.891687e-002, 2.487927e-003, -1.779465e-002, 1.071098e-001, -1.122910e-002, -1.788654e-001, -2.961258e-002, 1.682995e-001},
{-2.143767e-003, 4.461951e-003, 1.511691e-003, -2.048578e-002, 1.396038e-002, -2.676865e-002, -2.160337e-002, 4.475124e-002, -4.001018e-002, 4.475124e-002, -2.160337e-002, -2.676865e-002, 1.396038e-002, -2.048578e-002, 1.511691e-003, 4.461951e-003, 1.512027e-002, 6.864066e-002, -1.973810e-002, 3.996852e-002, 6.808863e-002, -5.842832e-002, -8.390925e-002, 2.276717e-002, 8.863577e-002, 3.450245e-002, -4.880667e-002, -8.063679e-002, 6.774238e-002, 2.026617e-002, 1.373460e-001, -7.465598e-002, 1.545981e-002, 1.422150e-002, -4.055460e-002, -2.479960e-002, -1.309523e-001, 9.799781e-002, 8.795301e-003, -7.292001e-002, 3.426576e-002, -6.452931e-003, -3.278055e-003, 7.396372e-002, -1.598287e-002, -1.319330e-001, 7.825409e-002, -5.177967e-002, -5.612443e-002, -2.688255e-002, -5.043831e-002, 9.457124e-002, 6.463431e-002, -9.321116e-002, 2.093256e-002, -4.583094e-003, -4.818824e-002, 1.453136e-003, 9.291115e-003, -8.978945e-002, 1.272682e-001, -1.161064e-001, 1.894493e-001, 1.367621e-002, 4.471211e-003, 1.918377e-002, 4.632324e-002, 6.391661e-002, 1.512312e-002, 1.267988e-003, -1.084055e-001, -3.683275e-002, 1.044227e-003, 3.239067e-002, -3.126964e-002, -2.990914e-002, 5.898844e-002, 1.093179e-002, 8.041378e-002, -1.223442e-002, -2.805391e-002, 1.287697e-002, 2.007046e-002, 1.043192e-001, 1.046357e-001, -1.422294e-002, -5.061693e-004, 4.768631e-002, 3.140406e-002, -1.258420e-001, -2.812549e-002, 3.723738e-002, -1.326225e-002, -5.289925e-002, -2.397865e-002, 9.663089e-002, -1.278298e-002, -2.022548e-002, 3.566197e-002, 6.474982e-002, 7.441810e-003, 7.954116e-002, 9.561030e-002, 2.535900e-002, -5.099477e-002, -3.178948e-003, -6.946138e-003, -1.040263e-003, -8.422906e-002, 3.653755e-002, -1.277128e-001, 8.561457e-002, 4.828611e-002, 1.263163e-001, 1.027703e-001, 1.064912e-002, -2.749446e-002, 7.679766e-002, -1.285633e-002, 1.148457e-003, 1.209895e-002, 2.047932e-002, -7.424257e-004, -1.670145e-002, -2.967332e-002, -8.727967e-002, 4.779310e-002, -1.242560e-002, 7.384602e-017, 9.326300e-003, 8.851616e-003, 1.537138e-002, -7.170738e-002, 5.017746e-002, -2.147609e-002, 4.422434e-002, 8.945819e-002, -4.422434e-002, 2.147609e-002, -5.017746e-002, 7.170738e-002, -1.537138e-002, -8.851616e-003, -9.326300e-003, 2.039497e-002, -2.627204e-002, 3.398589e-002, -5.399855e-003, -9.801530e-002, 4.093158e-003, 4.159687e-002, 2.233639e-002, -7.329612e-002, 3.274543e-002, 1.034532e-001, -1.250112e-001, 2.023259e-002, -2.853044e-002, -5.909789e-002, 1.723220e-002, -5.797584e-003, 1.379536e-002, -7.782227e-002, 1.684004e-001, -1.546775e-001, -5.138355e-002, -2.641501e-002, -1.922012e-002, -1.608616e-002, 1.383296e-002, -2.305947e-002, -7.126893e-002, 7.236790e-002, 9.395544e-002, -8.827121e-002, 6.785738e-002, 3.169758e-002, 3.618671e-002, 9.147246e-002, -1.727393e-002, -6.326195e-002, -5.979095e-002, 8.220807e-002, -2.490256e-002, 2.303800e-002, 2.075304e-002, -4.599940e-002, 1.748476e-002, 8.557266e-002, -8.018217e-002, -6.835304e-002, -1.141621e-001, 6.889267e-003, 1.162167e-002, 1.289060e-001, 8.236120e-002, -5.170991e-002, -2.725824e-002, -7.357791e-002, 6.266008e-002, -8.187291e-002, -9.674595e-003, 5.030812e-002, -9.024914e-003, 1.465837e-002, 1.576277e-001, -8.009098e-002, 6.880122e-002, -1.760893e-001, -1.708212e-001, 1.263470e-001, 7.397683e-002, -2.041286e-002, -2.139995e-002, 5.939249e-002, -1.413000e-002, -1.290425e-002, -3.580024e-002, -5.143847e-002, -7.190583e-002, -2.326856e-002, 1.042635e-001, -2.342072e-002, -3.664084e-002, 9.208627e-002, 1.046985e-001, 1.768167e-001, -1.364406e-001, -1.348925e-002, 5.807536e-002, -2.952582e-002, -2.334360e-002,

© ISO/IEC 2004 — All rights reserved


Copyright International Organization for Standardization
Provided by IHS under license with ISO
No reproduction or networking permitted without license from IHS
Not for Resale

6.581572e-002, -3.238366e-002, 1.033552e-003, 1.282371e-002, -5.649981e-002, -2.386981e-002, -6.618403e-002, 8.437965e-002, -3.880878e-002, 2.563781e-003, 6.002692e-002, 7.250174e-002, 4.888371e-002, -2.040368e-002, -5.775819e-002, -1.271997e-002, -6.232640e-002, 1.674305e-002, -1.771551e-002, 1.279914e-003, 8.368404e-002, -1.909369e-002, -2.964563e-002, 3.255142e-002},
{1.210562e-003, 6.291005e-003, 1.576761e-002, 8.474988e-004, -4.323227e-002, -3.327072e-002, 9.584565e-002, 4.412510e-002, -1.274235e-001, 4.412510e-002, 9.584565e-002, -3.327072e-002, -4.323227e-002, 8.474988e-004, 1.576761e-002, 6.291005e-003, -1.886385e-002, 2.066077e-002, 2.785876e-002, 5.433949e-002, 1.844623e-003, -5.735310e-002, 4.976223e-002, 1.740572e-002, 5.989825e-002, -1.130070e-002, 5.450650e-002, -2.147545e-002, 2.853521e-002, 2.912521e-003, 1.875685e-002, -2.302568e-002, -7.170180e-002, -3.458834e-002, 1.643519e-002, 4.603463e-002, 1.015760e-001, 3.617393e-002, -7.177630e-002, -3.270523e-002, 2.182139e-003, 5.871465e-002, -3.754910e-002, -6.847241e-002, 1.214121e-001, -2.708337e-002, -2.693909e-002, -1.406916e-002, -6.582833e-002, -7.599578e-002, 2.126998e-003, -4.096145e-002, -1.045543e-001, 2.293817e-001, 8.535845e-002, -1.419992e-002, 9.391684e-003, -5.551835e-002, 2.134430e-002, -4.291377e-002, 4.488868e-002, -1.440586e-001, -2.972267e-002, -5.075972e-002, 7.712053e-002, 3.200201e-002, 9.795862e-003, -1.189615e-001, -1.138905e-001, 2.931451e-002, 1.075901e-002, 2.485796e-002, 7.208836e-002, -1.890192e-002, -1.657190e-002, -2.164863e-002, 1.250109e-001, -9.378516e-002, 3.251741e-002, 1.235555e-001, 2.060886e-002, -1.489350e-003, -2.280278e-002, 1.426426e-001, 7.273460e-002, 1.393399e-002, 3.833975e-002, -3.589815e-002, -7.525990e-002, 4.045224e-002, -8.685611e-002, -3.171914e-002, -4.233883e-002, 8.385814e-002, -8.964270e-003, -3.987548e-002, -1.998244e-002, 5.408998e-002, -2.053256e-002, -9.098198e-002, 2.595490e-002, -8.326924e-002, -8.950310e-003, 4.074919e-002, 8.814700e-002, -9.046704e-003, 4.208422e-002, -1.560405e-002, -1.520673e-002, -1.857627e-001, 1.134489e-001, -1.824975e-002, -2.361188e-002, -1.165729e-001, -8.963121e-003, -1.831000e-002, -4.482227e-002, 1.619238e-002, -3.424515e-002, 1.053312e-002, -3.063498e-003, 3.394820e-003, -1.365069e-002, 3.185722e-002, 1.719004e-002, 6.971904e-002, 4.182113e-002, 2.639931e-003, 5.597643e-018, -5.371231e-003, -3.634863e-003, 3.665389e-002, -8.208696e-002, 8.091526e-002, 4.263651e-002, -1.412412e-002, 3.298773e-002, 1.412412e-002, -4.263651e-002, -8.091526e-002, 8.208696e-002, -3.665389e-002, 3.634863e-003, 5.371231e-003, 2.582881e-002, -1.652924e-002, -3.996999e-002, 3.984840e-002, -2.104490e-001, 7.827218e-002, -1.600903e-002, 9.612676e-002, 2.453071e-002, -3.128752e-003, -1.218571e-002, -1.015300e-001, 6.098149e-003, -6.618281e-002, 8.143745e-002, 3.862260e-003, 2.381076e-002, 1.093243e-001, 4.555401e-002, -4.989117e-003, -1.629970e-003, -1.207971e-001, 3.196181e-002, -4.150443e-002, -1.438279e-001, -7.053816e-003, -1.754469e-002, -5.524226e-003, 1.925777e-002, 2.129543e-002, 2.373083e-002, 4.790074e-003, -1.289530e-001, -9.911008e-002, -7.239926e-002, 8.035912e-002, 9.285038e-002, -3.682956e-002, -4.391843e-002, 1.327920e-002, 9.695129e-003, 1.450087e-002, 3.586628e-002, -2.782997e-002, 1.973222e-001, -3.432651e-002, -2.244770e-002, -3.516353e-002, -1.525942e-003, -7.596015e-002, 6.411082e-002, 9.519528e-002, -2.837880e-002, 4.438110e-002, -1.260273e-001, -8.564984e-002, 4.969357e-002, -6.318376e-002, -1.362882e-001, -2.452678e-002, 7.052803e-002, 5.015428e-002, 7.528661e-002, -2.122941e-002, -1.622365e-002, -1.762189e-003, -1.862437e-002, -4.849981e-002, -4.409408e-002, 8.083089e-002, 2.009056e-002, 1.273218e-002, 2.978821e-003, 4.650734e-002, 4.974118e-002, 4.651681e-002, -5.964307e-002, -1.515068e-001, -4.730985e-002, 1.104794e-001, -4.899067e-002, -1.510403e-001, 3.239047e-002, -2.219594e-002, 6.870878e-003, -1.052802e-001, 2.846334e-002, 2.837703e-002, 1.420400e-002, 5.305659e-002, 1.812068e-002, -1.581570e-002, 8.875610e-002, 1.117118e-001, 4.546593e-002, -1.773377e-003, -5.481515e-002, 4.984565e-002, -3.483156e-002, -5.051267e-002, 5.360140e-002, 6.325119e-002, 2.419493e-002, 3.189497e-003, -3.748720e-003, -9.387061e-003, -2.957070e-002, -5.511044e-002, 9.189600e-002, 7.614368e-003, -4.451187e-002, 1.187622e-001},
{-9.295800e-005, -7.999120e-003, -2.043223e-003, 4.994100e-003, -1.717988e-003, -2.281171e-002, -6.023196e-003, 5.828486e-003, -1.450627e-001, 5.828486e-003, -6.023196e-003, -2.281171e-002, -1.717988e-003, 4.994100e-003, -2.043223e-003, -7.999120e-003, -1.378035e-005, -4.190510e-003, 8.157689e-002, 4.468777e-003, -9.358810e-002, 8.870907e-002, 3.135761e-002, -5.121052e-002, 7.327194e-002, -1.887220e-003, -3.445985e-002, 6.895350e-003, 3.806442e-002, 8.945447e-002, -2.585272e-002, 2.194514e-002, -6.557893e-002, 7.012506e-002, 6.189336e-003, -1.158632e-001, -3.370281e-002, 1.304819e-001, 2.048459e-002, -4.166625e-002, 2.020302e-002, -1.621135e-002, 4.233855e-002, -1.168701e-001, 2.668515e-002, 3.849972e-002, -7.757028e-002, -5.516506e-002, -5.300527e-002, -3.378282e-002, 9.108153e-002, 7.334766e-003, 1.771443e-002, -8.422979e-002, -9.510582e-002, -1.094107e-001, -2.369437e-002, 1.198897e-002, -3.355450e-003, -1.727531e-001, 1.731900e-002, -6.960150e-002, 5.177939e-002, -1.777131e-003, 9.603070e-002, -1.987531e-002, -1.518894e-001, 9.717910e-002, -1.466429e-002, 4.293665e-002, -6.902393e-002, -3.401895e-002, 3.387880e-002, 1.757694e-002, -6.311740e-002, -2.204215e-003, -1.901876e-002, 1.027405e-001, 1.167239e-002, 8.470342e-002, 1.027212e-001, 2.166518e-001, 3.755248e-002, -2.812017e-002, 4.543319e-003, 3.920477e-003, 7.555429e-003, -5.138239e-002, -7.279680e-002, -3.057070e-002, 2.081756e-002, -3.570792e-002, -1.700355e-002, -1.596178e-001, 2.085099e-001, -6.854862e-002, 5.916093e-002, -1.445717e-001, 4.439581e-002, 4.474558e-002, -4.800901e-002, 7.195132e-003, 3.096174e-004, 2.004664e-002,


© ISO/IEC 2004 — All rights reserved

Copyright International Organization for Standardization
Provided by IHS under license with ISO
No reproduction or networking permitted without license from IHS
Not for Resale

4.146750e-003, -4.869270e-002, -4.625902e-002, -1.856881e-002, -8.275433e-002, -3.443767e-003, 5.283165e-002, -2.323358e-002, -4.968485e-002, 2.356583e-002, -4.422575e-002, 1.721724e-002, 1.389955e-002, 2.474701e-002, -2.052422e-002, 5.414072e-003, 1.666471e-002, 7.829385e-003, -3.823916e-002, -6.589881e-002, 3.538106e-002, 7.067721e-002, -8.857649e-002, -1.341372e-002, 4.983217e-017, -2.125900e-002, 9.716422e-003, 1.915820e-002, -4.120100e-002, -1.138555e-002, 2.641586e-002, 2.573180e-003, 9.747379e-002, -2.573180e-003, -2.641586e-002, 1.138555e-002, 4.120100e-002, -1.915820e-002, -9.716422e-003, 2.125900e-002, 7.792424e-003, 9.439605e-002, 2.413170e-002, -4.888403e-002, -9.427796e-004, 6.734366e-002, -4.022656e-002, -1.220945e-001, 3.561229e-002, 2.077961e-002, -1.691088e-002, -1.734589e-001, 1.694393e-002, 6.578461e-002, 4.102197e-002, 2.081198e-002, -1.117072e-002, -1.821360e-001, -9.750263e-002, 1.757878e-002, 7.650952e-002, 2.190719e-003, -5.190179e-002, -3.142887e-002, -8.220936e-003, 9.437049e-002, 1.539386e-002, -2.384208e-002, 6.130615e-002, 1.810292e-002, 6.604664e-004, -1.874464e-003, -2.839364e-002, 9.984822e-003, 5.836452e-003, 9.780922e-002, -2.948335e-002, 2.322424e-002, -7.074183e-002, 2.663826e-002, 8.311561e-002, -1.069619e-002, -2.333959e-002, -3.403074e-002, -1.172073e-001, 1.081250e-001, 6.252613e-002, 2.471032e-002, 2.923254e-003, 1.438085e-001, -2.397180e-003, -1.005017e-001, 1.451654e-002, -7.561836e-002, -3.284257e-002, 1.292312e-003, -1.100948e-002, 8.951432e-002, 9.077461e-002, 6.251978e-002, 1.786850e-002, 3.394753e-002, 2.038436e-001, 1.254125e-002, 1.247355e-001, -1.154427e-001, -3.265956e-002, -1.018019e-002, -3.092344e-002, -1.910111e-002, 6.840690e-003, -2.102647e-002, 1.105951e-002, -4.500970e-002, 3.706913e-002, -4.507705e-002, -9.836673e-002, 8.122974e-002, -8.930232e-002, -4.787676e-002, -1.580811e-001, -9.832756e-002, 6.985763e-002, 5.758355e-002, -4.530466e-002, 4.343634e-002, 1.666733e-002, 4.316441e-002, 3.524591e-002, 7.728673e-002, -6.680514e-002, -2.124193e-002, 4.086530e-002, 9.411775e-002, -6.678026e-002, 3.437446e-002, -2.329197e-002, 1.225766e-001, -3.053738e-002, 4.339624e-002, 5.804697e-002, -2.580732e-002, 2.647210e-002, 3.329959e-003, -1.872330e-002, 8.585787e-003, 4.354385e-002, -1.933168e-002, 2.572780e-002, -8.986925e-002, 1.572730e-003, 6.830344e-002},
{-3.316071e-003, 8.683941e-003, -1.060803e-002, -5.527420e-002, 5.288935e-002, 5.516309e-002, -7.416137e-002, 1.828000e-002, -7.332310e-002, 1.828000e-002, -7.416137e-002, 5.516309e-002, 5.288935e-002, -5.527420e-002, -1.060803e-002, 8.683941e-003, -1.066051e-005, 3.337813e-002, 9.856662e-003, 3.979432e-002, -9.677452e-003, 3.169711e-003, -3.269227e-002, 8.078670e-002, -2.241575e-002, -5.434214e-002, -7.274853e-003, 7.493070e-002, 1.008452e-001, -2.628105e-002, -7.159595e-003, -7.076990e-002, -6.421451e-003, -1.035868e-001, -4.039310e-002, 1.110657e-001, -6.774109e-003, -8.735941e-002, 2.928658e-002, -2.984233e-002, -1.669073e-002, -5.647983e-003, 9.798091e-002, -1.579705e-002, -1.355093e-002, -1.157738e-001, -1.534234e-002, 9.208325e-002, 4.707173e-002, 6.379301e-002, -1.564666e-002, 6.673170e-002, -2.128992e-001, 5.070486e-002, 6.173442e-002, -7.083116e-003, 5.921713e-003, -3.281230e-002, 4.935698e-002, 6.687982e-004, -9.668758e-002, -5.218121e-002, -8.584929e-003, 1.166898e-002, -1.168536e-003, -8.338925e-002, -5.168274e-002, -5.561006e-003, -5.528372e-002, 3.548075e-002, -1.242455e-001, 8.851257e-002, -1.418129e-002, 3.102003e-002, -5.386199e-002, 9.351092e-002, 5.767243e-003, 3.301738e-002, -8.574043e-003, 1.100433e-001, 1.894714e-003, -1.191970e-001, -4.363712e-003, -5.517279e-002, 1.550102e-001, 1.991408e-003, 8.130069e-002, -5.319932e-002, -4.477038e-002, -2.782969e-002, -2.527262e-002, 2.653856e-002, 1.003403e-001, -8.455503e-002, -6.274370e-002, -8.645569e-002, -4.072397e-002, -1.643683e-002, -1.255141e-001, -2.883964e-002, -1.426231e-002, 4.624138e-002, -4.841397e-002, 3.653349e-002, 7.640816e-002, 1.221219e-002, -6.427189e-002, -5.240187e-002, 6.063127e-002, -1.315261e-001, -3.793709e-002, 4.756501e-002, -5.535159e-003, -1.846387e-002, -4.398328e-002, 1.789599e-001, -1.402203e-001, -1.409777e-002, 4.909739e-002, 3.233393e-002, -2.503788e-003, -1.710046e-002, 6.806687e-002, 1.202768e-002, -9.629820e-002, 8.045138e-002, -6.614024e-002, -2.626937e-002, 2.439977e-016, 1.805708e-002, -1.873359e-002, -1.382046e-002, 1.454163e-002, 2.337179e-002, -2.594679e-002, 6.223984e-003, 7.980563e-002, -6.223984e-003, 2.594679e-002, -2.337179e-002, -1.454163e-002, 1.382046e-002, 1.873359e-002, -1.805708e-002, -1.809128e-002, 4.725053e-002, 3.415046e-002, 1.489135e-002, -7.183113e-002, -2.499923e-002, 1.248109e-002, 1.005322e-002, 2.275965e-002, -7.377566e-003, -9.580535e-002, -8.258735e-002, 9.376264e-002, 3.664746e-002, -6.000344e-002, 7.312160e-003, 4.810657e-003, -1.148419e-002, 2.229762e-002, -7.727500e-003, -4.648067e-002, -2.453098e-002, 1.649876e-001, 6.634717e-002, -1.392093e-002, 2.207862e-002, 9.126305e-002, -1.142813e-001, 1.120921e-001, 1.288182e-001, -9.440201e-003, -5.029010e-002, -6.829983e-002, -2.617874e-002, -1.674593e-002, 4.612886e-002, -9.470436e-002, 4.081734e-002, -9.109026e-002, -2.126981e-002, 1.111322e-003, 2.321918e-002, -7.494606e-002, 1.041729e-001, -2.731012e-002, 2.009303e-002, -2.181555e-001, -2.249643e-002, 9.123943e-002, 2.695578e-002, 1.901927e-001, -1.067468e-002, 3.651966e-002, -3.602056e-002, -4.875656e-003, -1.303225e-002, -1.154510e-002, -4.848077e-002, 1.422557e-001, -2.406907e-002, 9.019191e-002, -1.262609e-002, -3.854704e-002, 1.027412e-002, 2.407252e-003, 4.012158e-002, -1.501284e-001, -6.339151e-002, 5.843385e-002, 3.727057e-002, -1.205327e-002, -7.410364e-005, 4.153945e-002, 3.689859e-002, 3.612919e-002, -2.734473e-002, -6.911176e-003, -3.172109e-002, -9.184704e-002, -7.675748e-002, 5.338233e-002, 1.460350e-001, -1.454865e-002, 5.204496e-002, -6.689405e-002, 1.439990e-002, -3.872734e-002, 5.409432e-002,

© ISO/IEC 2004 — All rights reserved


Copyright International Organization for Standardization
Provided by IHS under license with ISO
No reproduction or networking permitted without license from IHS
Not for Resale

4.003973e-003, 1.256249e-001, -4.356557e-002, 9.372097e-002, -4.137482e-002, 7.137748e-002, -2.543412e-002, 2.990854e-002, 1.678275e-002, 6.595911e-002, -1.638429e-002, 7.989267e-002, -5.087150e-002, 4.651290e-002, 7.931543e-002, -6.050878e-002, -1.216861e-002, -7.201687e-002, 6.707416e-002, 2.992962e-002, 8.432663e-002, -2.349399e-002, 2.819758e-002, -8.147956e-002},
{1.261816e-003, -3.384449e-003, 5.215594e-003, -1.097825e-002, -1.163595e-002, -2.586257e-003, 1.275370e-002, 5.591929e-002, -4.765830e-002, 5.591929e-002, 1.275370e-002, -2.586257e-003, -1.163595e-002, -1.097825e-002, 5.215594e-003, -3.384449e-003, -1.474133e-003, 3.273382e-002, -6.159386e-002, 5.211974e-002, 8.638112e-003, 8.168816e-002, 2.531258e-002, -1.660809e-002, -2.215243e-002, 2.761606e-003, 8.762472e-003, 3.558650e-002, -1.920404e-002, -7.187877e-002, -2.183848e-002, 1.461582e-002, 1.865291e-002, -2.236027e-002, -1.640180e-002, 1.402326e-001, -5.717832e-002, -8.300341e-002, 2.636244e-002, -4.090593e-002, 1.441665e-002, -7.495596e-002, -8.144104e-003, -5.303075e-003, 6.891667e-002, 6.984552e-002, 7.217844e-002, 4.902411e-002, -3.270666e-002, -1.227254e-001, -1.539628e-001, 3.211365e-002, 7.057083e-002, 7.436608e-003, -6.753305e-002, 5.559680e-002, 1.235796e-001, 8.068537e-002, -6.098234e-002, 1.510635e-001, -6.238387e-002, -1.854055e-001, -1.052854e-001, 8.052681e-002, -7.985475e-002, 8.817613e-002, -6.522208e-002, -1.770003e-001, -3.590925e-002, 7.723202e-002, 8.218710e-002, -2.701921e-002, -1.353696e-002, 1.668583e-002, 1.680084e-001, -5.665949e-002, 3.942945e-002, 9.198161e-002, 2.462832e-002, -1.622343e-004, 7.211590e-002, 8.414775e-002, 1.027795e-001, -1.758823e-001, -3.582031e-002, 4.907913e-002, 1.175324e-003, -2.396819e-002, -2.869672e-002, 5.149200e-002, -3.602938e-002, 3.759714e-002, 5.106273e-002, -8.858569e-003, 3.877930e-003, 7.965595e-002, 1.170021e-002, -9.117743e-002, 5.412068e-002, 1.424021e-002, -7.673669e-002, 6.782087e-002, 2.465127e-002, -1.971359e-002, 4.008825e-002, -3.783456e-002, 1.990646e-003, 2.724159e-002, -2.470113e-002, -9.986060e-003, -6.559715e-002, 7.175060e-002, 7.923488e-004, 4.270180e-002, -7.766019e-002, -4.747281e-002, 4.966908e-002, -1.814106e-002, 2.096494e-002, 1.615853e-002, -5.124976e-003, 3.058849e-002, -9.941807e-005, -2.855568e-002, 6.025947e-002, 4.410670e-002, -1.302797e-001, 7.755194e-002, -1.352139e-016, 1.370358e-002, 4.560825e-003, -1.379488e-002, -4.207205e-003, -5.904519e-003, 6.086587e-002, -1.062976e-002, 1.232227e-001, 1.062976e-002, -6.086587e-002, 5.904519e-003, 4.207205e-003, 1.379488e-002, -4.560825e-003, -1.370358e-002, 1.695168e-002, 2.625590e-002, -5.025896e-003, 7.674456e-002, 7.716136e-002, -1.976764e-001, 1.209661e-001, 5.201511e-003, -8.210574e-002, 7.261180e-002, 4.238184e-002, -1.561002e-001, 1.897340e-002, -1.941527e-003, 2.524734e-002, 1.010629e-002, 3.331553e-002, 8.160920e-002, 3.850703e-002, -2.682691e-002, 6.722112e-002, 4.519110e-002, -6.445132e-002, 5.337032e-002, 2.397268e-002, -3.022914e-002, -6.304365e-002, -6.336649e-002, 8.199907e-002, -1.888658e-002, -6.668685e-002, -1.174585e-001, -1.625704e-003, -1.682657e-002, -5.485927e-002, -1.100811e-001, -1.163391e-002, 6.556958e-002, 6.734896e-002, 5.186820e-002, 9.888211e-002, 9.054975e-002, -3.355983e-002, -3.025984e-002, 5.979397e-002, 1.121962e-001, -4.177194e-002, 1.812814e-002, 8.766409e-002, 1.319254e-001, -2.991282e-002, -1.130117e-001, 2.072079e-002, -2.397701e-002, 1.491583e-002, -2.256808e-002, 5.617005e-002, -6.747040e-002, 5.414473e-002, 5.811068e-002, -6.254329e-002, -6.456763e-002, -1.284725e-001, 1.527153e-001, -6.407234e-002, -7.245413e-002, 9.448687e-002, 3.620570e-002, 4.111200e-002, 8.310864e-003, -5.948092e-002, -3.945099e-002, -6.556502e-002, 2.581784e-002, -3.454511e-002, -4.972006e-002, -2.294154e-002, -6.780147e-002, 4.972918e-002, -4.303382e-002, -1.279104e-001, 9.882922e-003, 2.609906e-002, -1.323229e-002, -6.054508e-002, 9.941390e-002, -5.921216e-003, -1.036233e-002, 8.993101e-002, 2.675834e-002, 7.747742e-003, -3.306929e-002, -1.240880e-003, -8.976244e-003, -5.763566e-003, 3.733627e-003, -1.395176e-001, 6.332525e-002, 1.247627e-002, 2.138775e-002, 4.640273e-002, -5.544723e-002, -5.259146e-003, -2.380404e-003, 8.823633e-003, 1.643201e-002, 2.585468e-002, -2.936942e-002, 2.953494e-002, 6.678921e-003, 1.325271e-001, -2.861180e-002},
{-2.289765e-003, 1.959081e-003, -8.046208e-003, -2.930572e-002, 1.495933e-002, 6.730592e-002, -6.873558e-002, -5.158594e-002, 9.988154e-002, -5.158594e-002, -6.873558e-002, 6.730592e-002, 1.495933e-002, -2.930572e-002, -8.046208e-003, 1.959081e-003, -2.140981e-003, -2.424173e-002, 1.278945e-002, -9.378457e-002, -7.545722e-002, 1.694764e-001, 2.525874e-002, -5.734006e-002, 3.463769e-002, 5.657891e-002, -1.283011e-002, -3.263719e-002, -1.331075e-003, -2.938874e-002, -6.385841e-004, 7.586618e-003, 2.631892e-002, 6.201058e-002, 9.385602e-002, -9.054404e-002, -5.726632e-002, -2.381633e-002, 1.215400e-001, 3.268622e-002, -3.938568e-002, 3.021452e-002, -6.176051e-002, -2.061523e-002, 4.727665e-002, 4.806303e-002, -9.652038e-002, -1.139965e-001, 6.097800e-002, -3.883951e-002, -8.736924e-003, 2.142845e-003, -2.712372e-002, -1.019142e-001, -7.004657e-002, 3.193520e-003, 1.294536e-001, -1.334754e-002, 8.797756e-002, 3.525460e-002, -9.635392e-002, -3.344384e-002, -3.724627e-002, 8.450769e-002, -3.340284e-002, 6.379241e-002, 3.519163e-002, -1.214265e-001, 1.555523e-001, 1.700919e-001, -3.225526e-002, -2.705105e-002, -4.660351e-002, -7.294389e-003, -2.436745e-002, 1.650825e-003, -1.188617e-002, -1.156141e-001, 3.786507e-002, 8.532044e-002, 1.371929e-001, 2.971251e-002, -1.388445e-001, 2.744777e-003, -1.544008e-001, -4.032815e-002, 5.514007e-002, -8.359762e-003, 2.260362e-003, 2.028222e-002, 7.029869e-002, -1.098362e-001, -4.343543e-002, -4.418130e-002, 2.238798e-002, -1.068507e-001, -1.432984e-001, -1.303819e-002, -6.830459e-002, 7.380452e-002, -2.300989e-003, -1.261052e-002, -2.892960e-002, -6.891514e-003, -


© ISO/IEC 2004 — All rights reserved

Copyright International Organization for Standardization
Provided by IHS under license with ISO
No reproduction or networking permitted without license from IHS
Not for Resale

3.074372e-002, 6.934224e-002, -4.496696e-002, 3.790424e-002, 9.300410e-002, -1.942165e-002, -2.902935e-002, -8.905263e-003, 1.983810e-001, 4.225970e-002, -3.139241e-002, -1.568458e-001, 7.003913e-002, 2.167716e-002, -4.756967e-004, 8.153579e-003, 2.385329e-002, -2.468899e-002, -3.260813e-002, -2.425605e-002, 2.497610e-002, -1.871758e-001, 9.542987e-002, -2.502529e-002, -9.140893e-017, -1.114107e-002, 1.421524e-002, 3.461371e-002, -6.251041e-002, 1.593032e-002, 1.529786e-002, -1.220492e-002, -1.561758e-002, 1.220492e-002, -1.529786e-002, -1.593032e-002, 6.251041e-002, -3.461371e-002, -1.421524e-002, 1.114107e-002, 6.350390e-003, -3.636455e-002, -4.749574e-002, 3.719876e-002, -2.695538e-002, 4.701452e-002, -1.241665e-001, -1.015365e-001, 6.491476e-002, 8.548193e-002, 2.162842e-002, -1.141009e-001, 6.116868e-003, -2.629948e-002, 7.239556e-002, 2.194712e-002, -1.094933e-002, -1.245891e-003, -7.762604e-003, 9.369204e-002, -6.833461e-002, 3.934654e-002, 3.719996e-002, 5.223148e-002, 7.239642e-002, 3.945596e-003, -8.956590e-003, -5.299425e-002, 3.651217e-002, 6.309016e-002, -2.354330e-003, 3.087059e-002, -6.842995e-003, 6.903652e-002, -1.739828e-001, 7.210506e-002, 7.824860e-003, 9.090098e-003, 1.589638e-002, -8.922012e-002, -2.080359e-002, -2.276680e-002, -1.647589e-002, 8.551731e-002, -6.102690e-002, 8.271155e-002, -3.918233e-002, -2.411571e-002, 9.159339e-002, -5.026911e-002, -8.368406e-002, 2.019384e-002, -5.067879e-002, 6.780450e-003, 1.795893e-002, 9.163382e-002, -4.667797e-002, 3.167167e-003, -1.269986e-003, -1.630114e-001, 2.344571e-002, 4.071438e-002, 9.835391e-002, 4.070711e-002, 1.225000e-003, -6.211353e-003, -5.122396e-002, 5.566873e-002, 3.966757e-002, -5.575315e-002, 6.303968e-003, -5.703088e-002, 1.108436e-001, -1.490701e-002, -8.426474e-003, 9.793211e-002, 6.714603e-002, -7.302008e-002, 2.157342e-002, 3.524265e-002, 1.100388e-001, -4.153976e-002, -1.170009e-002, -1.007928e-001, 6.037134e-002, 1.050719e-001, -5.407298e-002, -2.503009e-002, -8.440823e-002, -1.999269e-002, -2.539859e-002, 3.269904e-002, -7.478759e-002, -2.301063e-002, -7.964728e-003, 1.886272e-002, 4.245480e-002, -9.071774e-003, -3.102112e-002, 8.367516e-003, -7.000038e-002, 2.701093e-002, 7.015359e-003, 5.894513e-005, 2.801261e-002, -6.281673e-003, 4.962461e-002, -8.821683e-002, -7.299023e-002, 5.647046e-002, -4.551304e-002, 7.928301e-002},
{4.828905e-004, 1.283791e-002, -1.023387e-002, 1.378783e-002, -1.675508e-002, 2.247702e-002, 1.095296e-002, -7.595312e-002, 1.059739e-001, -7.595312e-002, 1.095296e-002, 2.247702e-002, -1.675508e-002, 1.378783e-002, -1.023387e-002, 1.283791e-002, -1.180499e-002, -4.735117e-002, -2.389700e-003, 1.111167e-001, 2.595186e-002, -1.163535e-001, -9.268526e-002, 7.438468e-002, 4.004803e-002, -1.679742e-002, -8.384733e-002, 1.438185e-003, 7.088231e-002, 1.450981e-002, 4.579798e-002, 8.687578e-003, 7.550919e-003, 2.794665e-002, -3.901296e-002, 8.107317e-002, 1.110915e-001, 1.449668e-001, 1.408292e-002, 9.517047e-002, -5.906250e-002, 9.241982e-003, -3.546467e-002, 6.989015e-002, 9.312946e-002, -2.216489e-002, -9.458782e-003, -7.627436e-002, -4.139608e-002, -1.501117e-001, -1.395386e-002, -2.637307e-002, 6.282296e-002, -2.063153e-001, -2.008088e-002, -4.126791e-002, 1.181331e-001, 3.971936e-002, 5.625135e-002, -1.419456e-002, 1.003223e-002, 6.595037e-002, 1.591198e-002, 1.184344e-001, 5.295870e-002, 1.253382e-001, 4.587886e-002, 1.905483e-002, -8.276736e-002, -2.302607e-003, -2.210637e-002, 1.688982e-002, -4.880345e-002, 4.233755e-002, 1.693241e-002, 5.572057e-002, -5.620182e-002, -7.066751e-002, 4.947295e-002, 8.279273e-002, 3.130688e-002, -1.249434e-001, 9.226564e-002, 3.593666e-002, -7.761453e-002, -3.011363e-002, -2.120214e-003, 1.479626e-002, -5.675808e-002, -4.378472e-002, 8.015565e-003, 3.800399e-002, -7.105652e-002, 1.107964e-002, -5.579636e-002, 1.040921e-001, -6.151107e-002, 6.532456e-002, 7.331632e-002, -9.055193e-002, 6.100967e-002, -1.050800e-001, 5.024966e-002, -1.558254e-003, 5.253075e-002, 1.982526e-002, -2.173452e-002, -5.361302e-002, 2.163414e-002, 3.876439e-002, -9.378662e-002, -1.395253e-001, -4.851988e-002, 5.258473e-002, 3.524043e-002, 5.290746e-002, 2.399015e-003, -1.770370e-002, 4.151134e-002, 4.821936e-002, -1.117247e-002, -6.758022e-003, 6.337225e-002, -2.451511e-004, -5.311574e-002, 1.212033e-001, -7.234741e-002, -7.814501e-002, -4.639204e-017, -7.238696e-003, -1.142938e-002, 7.215424e-003, 4.504658e-002, -2.182467e-002, -1.626043e-004, 1.340018e-002, 8.168721e-002, -1.340018e-002, 1.626043e-004, 2.182467e-002, -4.504658e-002, -7.215424e-003, 1.142938e-002, 7.238696e-003, 1.712176e-002, -1.485241e-002, -6.453410e-002, -8.474076e-002, 2.651819e-002, 1.603736e-002, -1.236547e-002, -3.136863e-002, 2.384045e-002, 3.088431e-002, -6.663890e-002, -4.108906e-002, 5.022541e-002, -4.605349e-003, 2.192996e-002, 2.848880e-002, -1.421534e-003, 1.512410e-001, -3.594041e-002, -3.954792e-002, -1.037288e-002, 5.409016e-002, 3.669059e-002, -4.182414e-002, 6.181254e-002, -6.292846e-002, -3.324906e-002, -4.587357e-002, -5.076678e-002, 1.086871e-001, 5.688890e-003, -1.757214e-001, -4.099674e-002, -9.466523e-002, -2.367029e-002, 1.512500e-001, -4.009017e-002, -4.585376e-002, 2.756792e-002, 7.154331e-002, 5.680611e-002, 1.119369e-001, -1.751511e-002, 1.131351e-002, -6.753746e-002, 9.887528e-003, -1.171076e-002, 1.470203e-002, -6.719846e-002, 8.987018e-002, -3.581749e-003, 1.704819e-002, -4.398002e-002, 1.180433e-001, -1.690120e-002, -1.036660e-001, -4.940451e-002, -1.044770e-001, 1.682269e-003, 9.966169e-002, -4.930044e-002, 1.837254e-002, 3.215775e-002, 1.126844e-002, 5.096326e-002, -5.461462e-003, 1.230004e-001, -1.024883e-001, -8.280151e-002, 4.675043e-002, -2.956145e-002, -4.025718e-003, 1.615406e-002, 3.136437e-003, -1.912122e-002, -2.243263e-002, 2.368890e-002, -8.478483e-002, 1.103002e-002, -8.328268e-002, -8.697768e-002, 1.941399e-001, 3.668233e-002, 1.270002e-003, 1.245225e-001, 2.356335e-002, 8.148262e-003, 7.526391e-002, -

© ISO/IEC 2004 — All rights reserved


Copyright International Organization for Standardization
Provided by IHS under license with ISO
No reproduction or networking permitted without license from IHS
Not for Resale

2.336406e-002, 4.985293e-002, 3.690632e-002, -4.305533e-002, 1.316992e-001, -5.222329e-002, -4.248034e-002, -2.375731e-002, 1.513038e-001, -5.894653e-002, -6.005271e-002, 1.336381e-001, -5.481267e-002, 2.354245e-002, 3.875118e-002, -7.288615e-002, -1.392940e-002, -3.569796e-002, 7.312961e-003, 1.072522e-001, -8.741878e-002, 1.727477e-002, 5.436625e-002, 2.956404e-002},
{-2.933220e-004, 2.773947e-003, -7.329869e-003, -1.184364e-002, 2.050488e-002, 4.405604e-004, 3.336519e-002, 1.384009e-002, -3.671464e-002, 1.384009e-002, 3.336519e-002, 4.405604e-004, 2.050488e-002, -1.184364e-002, -7.329869e-003, 2.773947e-003, 5.435916e-003, 1.561683e-002, 2.398325e-002, 8.915150e-003, 1.124805e-001, -1.112528e-002, -6.884565e-002, 1.245261e-002, 1.093721e-001, 1.342251e-002, -1.860227e-002, -9.673488e-002, 3.603163e-002, 5.974770e-002, -3.901534e-002, 5.369496e-002, -3.501324e-003, -6.600854e-002, -7.773172e-003, -1.366171e-001, 2.189058e-001, 8.735194e-002, -1.025522e-002, 2.346292e-002, -1.120920e-002, 4.648092e-002, -1.516651e-002, -7.227507e-003, 3.455640e-002, 7.092762e-002, 8.014392e-002, 1.855765e-002, 4.096668e-002, 4.080371e-002, -1.425581e-002, -5.289346e-002, -7.849417e-002, -4.284881e-002, 9.454052e-002, 1.704085e-002, -9.167121e-002, -2.626250e-002, -2.305189e-002, 7.963317e-002, -1.453498e-001, 1.056175e-002, -6.697364e-002, 3.964728e-002, -1.596226e-002, 6.313404e-003, 7.094895e-002, 9.446828e-002, 7.539231e-002, -3.571099e-003, 2.286926e-002, 4.175173e-002, 3.387005e-002, -8.639524e-002, -8.231777e-002, 8.061122e-002, 4.010149e-002, 9.100249e-002, 5.769598e-004, -1.195124e-002, 2.238881e-002, -5.291173e-002, -1.064963e-001, -7.218504e-002, -7.701508e-005, 1.422603e-002, -8.028962e-002, 2.177708e-002, 3.780740e-002, -4.896700e-003, 2.279600e-002, -1.503604e-002, -4.989145e-002, -1.247113e-002, -7.777780e-002, 1.038035e-002, -7.071830e-002, -1.556962e-002, -9.180573e-002, 2.874594e-002, -1.716646e-002, -9.401582e-002, 6.381416e-002, 8.295521e-003, -3.333640e-002, -4.128820e-003, 4.351951e-002, -9.585115e-002, 4.968397e-002, 1.333322e-001, -1.397854e-002, -2.445986e-002, 5.250570e-002, 3.838412e-003, -6.957006e-002, 3.218852e-003, 8.956881e-002, 2.242654e-002, -1.583422e-002, 8.048758e-003, -2.917869e-002, 3.581850e-002, -5.828496e-002, -1.700465e-003, 1.641273e-001, -1.404158e-001, 3.277022e-002, -6.642325e-002, 1.302143e-016, -2.106713e-003, 2.133019e-003, -4.559704e-002, 4.748621e-002, 2.027036e-002, -5.389640e-002, 2.992128e-002, -1.848962e-002, -2.992128e-002, 5.389640e-002, -2.027036e-002, -4.748621e-002, 4.559704e-002, -2.133019e-003, 2.106713e-003, -1.399348e-002, 2.997562e-004, -4.349598e-002, 1.831942e-002, 7.051808e-002, -3.452348e-002, 1.865962e-002, 6.448091e-002, -4.691506e-002, -3.133036e-002, 6.287806e-002, 9.542836e-002, -6.028887e-003, 1.859188e-002, -8.013471e-002, -1.912761e-002, -3.187733e-002, 4.065363e-002, -1.821900e-003, 7.891548e-002, 4.999357e-002, -1.057772e-001, -5.186572e-002, 1.426348e-002, -7.181209e-002, 7.714600e-002, 3.378477e-002, -3.577011e-003, -1.387135e-001, 7.288422e-002, -6.078612e-003, -8.506123e-002, 4.166790e-003, -1.332751e-001, -1.117195e-001, -2.045574e-002, 3.890746e-004, 3.062888e-002, 3.988487e-002, -2.224205e-002, 4.195289e-002, -3.490635e-002, -1.282483e-002, 8.600104e-002, -3.813316e-002, -9.563407e-002, -3.062757e-002, 1.642109e-001, 7.222297e-002, 1.094452e-001, 3.407340e-002, 1.180540e-001, -2.560765e-002, 4.539889e-002, -4.243570e-002, -1.412529e-002, 1.151851e-002, 3.314390e-002, 3.788884e-002, -2.727371e-002, -9.548494e-002, 6.027388e-002, 5.509689e-002, -1.097736e-001, -1.225403e-003, 7.479428e-002, 9.102466e-003, -1.327425e-001, -7.173895e-002, -7.239678e-002, 4.688968e-002, 6.710740e-003, -8.520104e-003, 4.798408e-002, 6.198698e-002, -1.699895e-002, 7.493000e-003, -4.472259e-002, 1.074050e-001, 8.946292e-002, 1.398871e-001, -5.687852e-002, 2.775806e-002, 1.844056e-002, -4.083275e-002, -3.387152e-003, 1.713230e-002, -5.637220e-002, 1.600441e-002, -6.746518e-002, -6.918013e-002, 1.873852e-001, -5.893611e-002, 9.857186e-004, 1.531717e-001, -1.433385e-001, -5.319339e-002, 1.250321e-001, 3.914122e-002, -2.061541e-001, 5.092924e-002, -1.106741e-003, -6.697455e-002, 5.279487e-002, -2.371512e-002, -1.365398e-002, 1.025777e-002, 1.139960e-002, -2.423265e-002, -1.053691e-001, 1.061462e-001, 2.518027e-004},
{1.507957e-003, 2.296565e-003, 1.932389e-002, -1.738757e-002, -1.828253e-003, 3.172091e-002, -1.967472e-002, -2.900759e-002, 1.015312e-001, -2.900759e-002, -1.967472e-002, 3.172091e-002, -1.828253e-003, -1.738757e-002, 1.932389e-002, 2.296565e-003, 7.687544e-003, 5.446690e-002, -3.698839e-002, -2.851652e-002, 1.367006e-001, -4.466867e-002, 3.847723e-002, 4.159930e-003, -3.761570e-003, 7.366373e-003, -2.221745e-002, 8.473869e-002, -8.039980e-002, 7.908268e-002, 4.777388e-002, -8.455250e-002, -2.396838e-002, -6.873446e-002, 1.793911e-002, 7.343708e-003, 5.795055e-002, 2.073039e-002, 1.497012e-002, -3.861329e-002, 3.837573e-002, 4.490686e-002, 3.002411e-003, 2.151532e-002, 7.761674e-002, -4.000657e-002, -1.162587e-001, 5.571103e-002, 5.131330e-002, -2.426357e-002, -1.923028e-002, -7.019325e-002, -8.626065e-002, 1.530873e-001, -6.832595e-002, 3.585684e-002, -5.011457e-002, -9.770333e-002, 1.800900e-002, -1.563324e-001, 1.004636e-001, 8.667642e-002, 8.876751e-002, 4.691494e-002, -9.489038e-002, 4.905411e-002, -1.982170e-001, 3.688945e-003, -2.471071e-003, -1.487115e-001, -1.431349e-002, -3.743311e-002, -3.829448e-002, 4.773768e-002, 2.143942e-003, -1.046874e-001, -8.875923e-003, -1.340834e-001, -2.283261e-002, -2.174052e-002, -2.470795e-003, -5.760210e-002, 1.515382e-001, 1.434717e-001, 9.420658e-002, -2.450329e-002, 3.442567e-002, -3.039768e-002, 4.445933e-002, 3.126566e-002, -2.100023e-002, 3.461575e-002, -3.590702e-002, 1.046923e-001, -4.344197e-002, -1.119646e-003, -1.283597e-002, -1.176261e-001, -8.687046e-002, 1.149236e-001, 7.499510e-002, 2.519277e-005, -3.997817e-002, 7.217203e-002, -


© ISO/IEC 2004 — All rights reserved

Copyright International Organization for Standardization
Provided by IHS under license with ISO
No reproduction or networking permitted without license from IHS
Not for Resale

1.164335e-002, -1.922893e-002, 6.668693e-002, 8.762303e-003, -8.054182e-002, 1.160325e-001, -5.900031e-002, -4.558261e-002, -1.072041e-001, 1.195622e-001, 2.633237e-002, -5.887068e-002, -2.610501e-002, 2.655469e-002, -2.406581e-002, -1.588608e-002, 3.244956e-003, -1.358807e-002, 2.174994e-002, -4.449706e-002, 7.259645e-002, 6.690372e-003, -5.592905e-002, -2.918237e-002, 6.402225e-017, 1.019015e-002, -4.939755e-004, -2.927668e-002, 4.548021e-002, -1.131172e-002, 3.269727e-002, -1.796078e-002, 2.343828e-003, 1.796078e-002, -3.269727e-002, 1.131172e-002, -4.548021e-002, 2.927668e-002, 4.939755e-004, -1.019015e-002, -3.249586e-003, -2.919221e-002, -3.673259e-002, -6.119142e-002, 5.142504e-002, 7.660724e-002, -5.343905e-002, -3.590625e-002, 4.135740e-002, -5.844347e-002, 1.937276e-003, 4.890136e-002, 1.049657e-003, 7.367508e-003, 1.106848e-002, 5.228979e-002, 1.113746e-002, -2.606389e-002, -4.446187e-002, 5.530596e-002, -6.542006e-002, 1.608379e-001, 9.100968e-002, -1.477598e-002, -1.410058e-002, 1.017972e-002, -7.894225e-002, 4.174344e-002, 4.971992e-002, 2.192219e-002, 2.203093e-002, -3.414490e-002, -3.529685e-002, 1.266161e-001, -4.242106e-002, 3.421591e-002, -2.111530e-001, 5.935452e-002, 3.539564e-003, 1.649305e-002, -5.434121e-002, -4.560790e-002, -3.619167e-002, -6.079534e-002, -4.584201e-002, -1.037901e-001, 9.814200e-003, -1.148280e-001, 7.069436e-003, -2.523140e-002, -2.077484e-002, 8.903886e-003, -7.079957e-002, -5.962368e-002, -3.020724e-002, -1.313565e-001, 9.430565e-004, -1.544203e-002, -4.708209e-002, 7.822399e-002, 6.229646e-002, 1.515303e-002, -5.733619e-002, 6.173349e-002, -2.975201e-002, -1.535984e-001, 9.628920e-002, -8.040114e-002, 9.291266e-002, -7.562484e-003, -5.691602e-002, 1.399859e-002, -7.159532e-002, -4.826300e-002, 7.130457e-003, 1.719704e-002, -4.229753e-002, 2.062705e-001, -1.335556e-002, -6.319897e-002, -2.684187e-002, 7.284910e-002, -2.725723e-002, -7.832035e-002, 3.263196e-003, -5.641188e-002, -7.092855e-003, -2.823533e-002, -1.711513e-002, -4.446706e-002, 1.003482e-002, -5.494310e-002, 3.831921e-002, 2.883287e-002, 2.887748e-002, -4.233983e-002, -1.562141e-002, 1.938245e-001, 5.147866e-002, -1.032272e-001, 1.300631e-003, 5.478592e-002, -7.150027e-002, -9.206820e-003, -8.762300e-003, 2.620763e-002, -1.042110e-001, 7.275093e-004, 2.956931e-002, -8.167588e-002, 8.404025e-002, -2.395173e-002},
{1.933487e-003, -1.033462e-002, 1.992991e-002, -2.904872e-002, 2.454262e-002, -7.558231e-002, 5.362042e-002, -2.946030e-002, 6.819629e-002, -2.946030e-002, 5.362042e-002, -7.558231e-002, 2.454262e-002, -2.904872e-002, 1.992991e-002, -1.033462e-002, 1.327029e-002, -2.052093e-002, -1.278111e-002, -7.065336e-003, 4.897194e-002, -9.316882e-002, 1.197109e-001, 2.673087e-002, -2.273137e-002, -2.624150e-002, 3.251523e-002, -4.007774e-002, 9.312102e-002, -3.131512e-002, 2.814418e-002, 4.250730e-002, -3.265709e-002, 1.214028e-001, -3.661424e-002, -2.756649e-003, -6.727314e-002, -1.107274e-002, -9.575749e-003, 4.221419e-002, 3.889643e-002, 1.705166e-001, -2.717898e-002, -6.372253e-002, 1.923283e-001, -3.064297e-002, -6.519890e-002, -1.187404e-001, -6.359951e-003, -1.000804e-001, -1.954736e-001, 4.935359e-002, -1.029406e-002, 1.166876e-001, -5.935685e-002, -1.378828e-004, 2.825804e-003, -7.547230e-002, -4.900370e-002, 6.364878e-002, 1.937565e-002, -1.310203e-001, -3.469837e-002, -3.839324e-002, 1.552932e-001, 8.506928e-002, 1.709313e-002, 5.396885e-002, -1.772449e-002, -1.210944e-001, 3.636926e-002, -8.774894e-002, 2.559237e-002, -2.093403e-002, 4.745874e-003, 1.163649e-002, -1.237240e-001, 1.807539e-002, -3.211831e-003, 1.544808e-001, 1.597030e-003, 6.752223e-002, 5.079425e-002, -6.765954e-002, -7.122737e-003, -2.866561e-002, -6.102062e-002, 2.059044e-002, 1.410916e-002, 7.270772e-002, 1.362410e-003, -1.814305e-002, -1.710184e-002, 5.278650e-002, 1.579239e-001, 6.778379e-002, 1.658397e-002, 5.970898e-002, 2.003425e-002, -9.077197e-002, 1.557881e-002, 1.071813e-002, -2.218274e-003, -7.073773e-002, -4.168895e-002, -5.426364e-002, 3.238206e-002, -4.062380e-002, 1.424709e-001, -1.457257e-001, -2.469260e-002, 1.130300e-001, -6.481059e-002, 6.924275e-002, 7.323396e-002, -4.072200e-002, -7.933059e-002, -1.566037e-002, -9.681592e-003, 9.778662e-003, 2.948134e-002, 6.390822e-003, -4.955790e-002, 6.126042e-002, -8.144545e-002, -1.744883e-002, 7.026814e-003, 6.638973e-002, -9.803797e-017, -1.167043e-002, 2.868083e-002, 2.052863e-002, -4.489272e-002, 5.424205e-003, -7.021236e-003, -1.664117e-002, -5.167683e-002, 1.664117e-002, 7.021236e-003, -5.424205e-003, 4.489272e-002, -2.052863e-002, -2.868083e-002, 1.167043e-002, -2.279848e-002, -8.046948e-002, -7.991574e-002, 1.615434e-002, 5.186691e-002, 1.421096e-001, -1.343035e-001, -5.857523e-002, -3.653580e-002, -3.445214e-002, -1.051420e-001, 1.111986e-001, -4.297416e-002, -1.239990e-003, -1.244027e-002, 7.553524e-002, 7.762786e-002, 1.164892e-001, 5.674143e-002, -9.350033e-002, -1.939298e-002, -1.038282e-002, 1.013808e-001, -2.998808e-002, -8.552329e-003, -1.778741e-002, 2.025048e-002, -8.696681e-002, 1.991765e-002, 7.726500e-002, 4.497864e-002, 1.338949e-003, -4.471276e-002, 5.117066e-002, 2.923464e-003, -5.680490e-002, 8.678575e-003, -2.271382e-002, 5.344574e-002, 6.115064e-002, 8.956859e-003, 2.638132e-002, 9.150737e-002, -4.808660e-002, -1.118502e-001, 9.653200e-003, 3.682877e-002, 4.734266e-002, 1.409934e-002, 8.017368e-002, -1.553540e-002, -3.158871e-002, 7.288913e-002, 4.013177e-002, 3.588949e-003, 2.639677e-002, 4.944228e-002, 5.499403e-002, -4.314193e-003, -3.097193e-002, 2.726773e-002, 1.314739e-001, -2.602978e-002, -1.284407e-001, 2.880897e-002, 2.859756e-002, -1.599449e-002, -7.107419e-002, 8.441366e-002, 6.006509e-002, -2.955123e-002, 1.789664e-002, -9.524590e-002, -4.318015e-003, -1.037003e-001, 1.095504e-001, 1.476590e-001, -5.839229e-002, -9.716021e-003, 4.482939e-002, 1.247310e-002, 3.741650e-002, -7.804868e-002, -1.602511e-002, -1.191693e-002, 2.044164e-002, -1.906253e-002, -5.165912e-002,

© ISO/IEC 2004 — All rights reserved


--`,,```,,,,````-`-`,,`,,`,`,,`---

Copyright International Organization for Standardization
Provided by IHS under license with ISO
No reproduction or networking permitted without license from IHS
Not for Resale

6.086777e-003, -8.632067e-002, -8.583216e-003, -2.313540e-003, -6.904174e-004, -9.829758e-002, -7.578461e-002, -3.037783e-002, -3.652259e-002, -2.626703e-002, 3.566469e-002, -5.186682e-002, 2.415030e-003, -2.610687e-002, 4.280441e-003, -8.803170e-003, 3.215532e-002, 3.767582e-002, -2.253996e-002, -3.236301e-002, 1.812154e-002, -6.517534e-002, 1.834648e-001, -1.175691e-001},
{1.079984e-003, -6.629910e-003, 6.047379e-003, 1.712329e-004, -2.579752e-002, 1.856761e-002, -9.665936e-003, 3.113807e-002, -6.825445e-002, 3.113807e-002, -9.665936e-003, 1.856761e-002, -2.579752e-002, 1.712329e-004, 6.047379e-003, -6.629910e-003, -7.745405e-003, 2.703746e-002, 6.238187e-002, 7.664638e-002, -6.950596e-002, -8.698727e-002, 8.265441e-003, -2.491838e-002, 2.057531e-002, -8.128151e-002, -8.656710e-003, 8.177458e-002, -4.404732e-002, -3.102197e-002, -3.572100e-002, 2.833495e-002, 1.537307e-002, -1.550016e-002, -7.651160e-002, -4.821900e-002, 1.140819e-001, 7.481567e-002, -8.077769e-002, 3.125154e-002, -2.595947e-003, 1.268134e-002, -1.052352e-001, 8.371459e-002, 8.084646e-002, -1.003400e-001, 1.982422e-002, -4.329248e-002, -3.891233e-002, 5.391412e-003, 6.049432e-003, 9.072512e-002, 1.036251e-001, -1.552500e-001, 6.031894e-002, -4.997006e-002, 3.404561e-002, -2.022292e-002, -3.503020e-002, -1.496079e-002, 2.110166e-002, 3.617464e-002, 3.698685e-003, 3.067167e-002, 1.766960e-002, -3.466573e-003, 1.760791e-002, 5.189943e-002, -1.315200e-002, 2.818904e-002, -6.380222e-002, 4.381324e-002, 2.619865e-002, 5.307835e-002, -2.575443e-002, -1.955667e-001, 7.413757e-002, -8.349467e-003, 1.231255e-001, -7.648173e-002, -4.272399e-002, -6.374636e-004, 3.216292e-002, -1.637989e-002, -1.197210e-001, 1.614622e-002, 4.511309e-002, -5.643060e-002, 8.418539e-003, -2.084209e-002, -8.456483e-003, 2.269236e-002, -5.532826e-002, 9.219437e-002, 5.455459e-002, 2.340476e-002, -7.865430e-002, 1.596732e-001, -1.203265e-002, 1.283462e-002, -7.338549e-002, 7.118515e-002, 3.060566e-002, -8.870257e-003, -3.433415e-002, -2.491396e-003, 4.690225e-003, 7.194903e-003, -2.002233e-001, 1.551824e-001, -5.115600e-002, 2.567130e-002, 6.716160e-002, -3.724921e-002, 5.419848e-002, -6.394049e-002, 9.370625e-002, -1.354177e-003, -1.666597e-002, -2.938321e-002, 4.601162e-002, 2.091888e-002, 8.102638e-003, -8.162048e-002, 4.126967e-002, -5.821222e-002, 5.061160e-002, -2.765283e-002, -6.197801e-017, 6.783849e-003, -2.221802e-002, 2.418239e-002, 1.360761e-002, -6.958370e-002, 2.109958e-002, 5.547164e-002, 1.255110e-002, -5.547164e-002, -2.109958e-002, 6.958370e-002, -1.360761e-002, -2.418239e-002, 2.221802e-002, -6.783849e-003, -8.280029e-003, 1.424044e-003, 5.929017e-002, 1.367813e-002, -1.030309e-001, 3.236788e-002, 1.098355e-001, -7.363069e-002, 1.740614e-002, 3.646917e-002, -4.533440e-002, -4.934793e-002, 5.530367e-002, -2.662526e-002, -7.523918e-002, 4.364222e-002, 7.115846e-002, 1.987657e-002, 6.541950e-002, 5.824854e-003, -3.898783e-002, 2.298201e-002, -4.466532e-002, -8.008846e-003, 4.267254e-002, -7.461976e-002, -4.769358e-002, 2.122671e-002, -4.494374e-003, -8.775897e-003, -3.879595e-002, 5.112973e-002, 2.720278e-002, 3.946649e-002, -7.180532e-002, -9.762700e-002, 5.282078e-002, 7.353555e-002, -6.069332e-002, 1.571843e-002, 4.522066e-002, 5.530152e-002, -7.526673e-002, -3.973993e-002, 3.707948e-002, 1.419170e-001, 1.249327e-001, 1.075029e-001, -1.199497e-001, -2.021861e-001, -1.556883e-001, -7.026158e-003, 1.656306e-001, -1.397511e-001, 6.764522e-002, -4.946208e-002, 8.338773e-002, 4.472116e-002, 2.621971e-002, -8.345657e-002, 1.542223e-001, 3.278263e-002, -2.185994e-002, -2.751462e-002, -5.679398e-002, 2.154002e-002, -8.114689e-002, 8.248520e-002, 1.119446e-002, 3.696254e-002, -4.632128e-002, -1.235372e-002, 4.796493e-003, 9.183520e-003, -3.324558e-004, 7.060758e-003, -6.612495e-002, 9.726530e-002, -7.082774e-002, 1.265975e-002, -7.227716e-002, -8.076069e-002, 1.057005e-001, -8.175213e-002, 1.026800e-001, 3.848909e-002, -8.031085e-002, 2.317922e-002, 4.813592e-002, 4.378323e-002, 4.088240e-002, -1.112623e-001, 4.222925e-002, -1.190630e-001, 6.774254e-002, -5.286576e-002, -6.286403e-002, -1.412781e-001, 3.799740e-002, 4.818072e-002, -1.994519e-002, -5.373220e-002, 1.639117e-002, -6.989166e-002, 1.890551e-003, 4.222550e-002, 2.245980e-002, 4.270133e-002, 2.567130e-002, -4.514165e-002, -8.480973e-003, 1.065438e-001},
{-2.464101e-004, 3.059998e-003, -1.940831e-003, -2.198425e-002, 4.836135e-002, -9.679266e-004, -9.318300e-002, 1.021912e-001, -7.457589e-002, 1.021912e-001, -9.318300e-002, -9.679266e-004, 4.836135e-002, -2.198425e-002, -1.940831e-003, 3.059998e-003, 1.660951e-003, 1.052398e-002, 5.745361e-003, 3.671466e-002, -4.650676e-002, -5.191411e-002, 4.698869e-002, -5.472945e-002, 2.862989e-002, -1.685967e-002, -1.182262e-002, 7.097592e-002, 6.056414e-003, -5.942400e-002, 5.069574e-002, -5.963481e-002, -2.186514e-002, 1.108599e-002, 4.554369e-002, -6.530162e-002, 8.363231e-002, -5.633310e-003, -8.891410e-003, 2.487063e-002, 5.259130e-002, -5.763478e-002, 3.053639e-002, -3.825038e-002, 1.315151e-001, -1.665290e-001, -5.727491e-002, -3.514326e-002, 1.185238e-002, -2.281433e-003, -3.251608e-002, 8.196712e-002, 2.240129e-002, -6.700616e-002, 5.174338e-002, -7.328223e-002, -7.219989e-002, -3.114919e-002, -7.733479e-002, -3.650434e-002, 6.906613e-002, 6.117233e-002, -6.738225e-002, -1.166298e-002, -1.026397e-001, -4.491140e-002, -3.967181e-002, 4.879797e-002, 1.349525e-002, -1.481073e-002, 2.272797e-002, 1.526581e-001, 1.110571e-001, 7.781391e-002, 1.112072e-002, 3.159702e-003, 2.929640e-002, -5.634001e-002, -2.759666e-004, -3.626554e-002, 9.324150e-002, 6.045593e-002, -1.079857e-001, 1.623926e-002, -7.985490e-002, 3.259634e-002, 4.120963e-002, -3.252704e-002, -2.235207e-002, 1.924503e-002, 5.658707e-003, -6.916237e-002, -2.305789e-003, -7.370425e-002, -8.522154e-003, 7.318595e-002, 1.347498e-001, -3.774414e-003, 4.833449e-002, -1.019652e-001, -3.508135e-002, -1.217969e-002, -1.456979e-002, -6.443495e-002,


© ISO/IEC 2004 — All rights reserved

Copyright International Organization for Standardization
Provided by IHS under license with ISO
No reproduction or networking permitted without license from IHS
Not for Resale

3.420464e-002, -4.629998e-002, 5.653777e-002, -2.847549e-002, 2.762242e-002, -3.721766e-002, 4.101477e-002, 4.955045e-003, -2.626638e-002, -5.679235e-002, -1.994418e-003, -7.096506e-002, -6.022318e-002, 1.560598e-002, -4.513618e-002, 4.665920e-002, 1.240241e-002, 6.955060e-002, -5.855759e-002, 1.357203e-002, 4.788350e-003, 3.051630e-002, -2.525622e-002, 2.830795e-002, 1.141471e-017, 7.278775e-003, -1.393549e-002, 1.607541e-002, -2.161568e-002, 8.407906e-003, 2.580876e-003, 3.793257e-002, 4.205338e-002, -3.793257e-002, -2.580876e-003, -8.407906e-003, 2.161568e-002, -1.607541e-002, 1.393549e-002, -7.278775e-003, 2.016533e-002, -3.087412e-002, -4.565538e-002, 8.861575e-002, -7.595663e-002, -2.001252e-001, 1.166341e-001, 8.294641e-002, -6.171081e-002, -6.538172e-002, 6.720628e-002, -3.809061e-002, 1.038801e-001, -4.847286e-002, 2.528304e-002, 7.395578e-002, -5.868150e-003, 2.655409e-002, -8.907863e-003, 9.245084e-002, -8.043526e-002, 1.127209e-001, -3.592737e-002, 9.342419e-003, -5.990114e-002, 9.576951e-002, -2.775413e-002, 1.136289e-001, -3.909235e-002, 5.337691e-003, -1.539709e-003, -8.861820e-002, 2.815701e-002, 8.126013e-002, -2.329099e-002, -1.467894e-002, -4.580014e-002, 5.005187e-002, -1.235257e-002, -1.090663e-001, 9.864159e-003, -8.586155e-002, -8.832358e-003, 7.703791e-002, -7.155544e-002, -1.507857e-001, -3.397512e-002, 6.981590e-002, 7.517274e-003, -4.217077e-002, -5.985871e-002, 1.618827e-001, -1.865509e-001, -1.998779e-002, 6.943109e-002, 7.104456e-002, -5.005211e-003, 2.870357e-002, -4.485044e-003, 1.245207e-001, -1.563022e-001, 6.161582e-002, 6.374317e-003, -3.640273e-002, -3.259968e-002, 1.196338e-002, 1.213855e-001, 1.515283e-003, 6.622604e-002, -5.058345e-003, 3.078495e-002, -7.307509e-002, -3.333724e-002, -2.389396e-002, 5.744801e-002, -3.160037e-002, 1.090082e-001, 6.920485e-002, 1.151773e-001, 9.070609e-002, 3.126539e-002, -1.950632e-001, 1.594736e-002, -6.034538e-002, -2.577986e-002, -6.559547e-002, -1.842307e-002, -4.880715e-003, 4.521345e-002, -1.263197e-002, -2.162573e-002, -2.569783e-002, -2.660040e-002, 1.493518e-001, -4.571423e-002, -1.600843e-001, -8.201286e-002, -1.112785e-001, -5.491333e-002, -1.492105e-002, -3.498268e-002, 7.291853e-002, 4.166991e-003, 5.641114e-002, -2.689453e-002, 1.946853e-002, 1.234853e-002, -2.874843e-002, -4.402460e-003, 1.370939e-001, -8.050350e-002, -1.853212e-002},
{2.152770e-003, -3.000205e-003, 1.605676e-002, -2.609176e-003, 2.055591e-002, -7.709565e-002, 5.728641e-002, -5.692365e-002, 7.555167e-002, -5.692365e-002, 5.728641e-002, -7.709565e-002, 2.055591e-002, -2.609176e-003, 1.605676e-002, -3.000205e-003, -7.071426e-003, 1.245598e-002, -8.232712e-003, 8.162948e-003, 8.465377e-002, -1.586446e-002, -3.631272e-002, 8.571967e-003, -1.201246e-002, -4.628781e-003, -2.072251e-002, -2.944126e-002, 1.217838e-001, -1.028422e-001, 2.308080e-002, 2.808229e-002, 1.941381e-002, -3.838134e-002, -5.513030e-003, 8.165749e-002, 1.510669e-002, -4.185120e-002, 4.839928e-003, 9.260629e-002, -6.220235e-002, 2.240123e-002, -8.922463e-002, -5.487249e-002, 1.322020e-001, 3.251774e-002, -5.632547e-002, 5.430469e-002, -1.075204e-002, -6.976055e-002, -2.437256e-002, -3.449775e-002, 9.573343e-002, 1.133714e-001, 1.993567e-002, 7.849340e-002, 2.664784e-002, -6.326124e-002, 1.914076e-002, 9.575615e-002, -3.181081e-002, -1.093682e-001, 2.042315e-002, -1.260674e-002, -4.783478e-002, -1.522184e-001, -2.160893e-002, -8.296153e-002, 5.347661e-002, -1.228930e-001, -4.461938e-002, -7.882129e-002, -2.151525e-002, 3.768011e-003, -3.698699e-002, -1.305986e-001, -8.823909e-002, -8.715216e-002, -1.122635e-001, 2.189231e-002, 9.692956e-002, 1.130147e-001, -1.753774e-002, -8.512971e-002, -2.317607e-002, -1.013603e-001, -2.484052e-002, 3.190027e-003, 3.053109e-002, 5.998820e-002, 9.639531e-002, -3.873722e-002, -4.354971e-002, -5.725857e-002, 2.557615e-003, -7.226199e-002, -1.391136e-001, -3.267168e-002, 2.107404e-002, 1.048445e-001, -1.212019e-001, 1.061854e-001, 7.362040e-002, 2.966319e-002, -3.732337e-002, -1.813778e-002, 1.083251e-002, 8.517346e-002, 1.481563e-002, 2.885566e-002, -5.701365e-002, 8.996564e-002, 3.632102e-002, -3.469151e-002, -1.936991e-002, -2.571742e-003, 5.678145e-002, -4.057389e-003, -2.729243e-002, -3.118034e-002, -1.671132e-002, -2.021904e-002, -6.433438e-002, -2.366934e-002, 8.082842e-002, 3.675751e-002, -9.572184e-003, -1.608218e-001, -1.711470e-017, -3.212025e-003, 1.119712e-002, -1.434831e-002, -6.421046e-003, 3.140827e-003, 2.066455e-003, 1.768973e-002, 4.373051e-002, -1.768973e-002, -2.066455e-003, -3.140827e-003, 6.421046e-003, 1.434831e-002, -1.119712e-002, 3.212025e-003, 1.034839e-002, 2.226964e-002, 3.676217e-002, -5.044640e-002, -1.175349e-001, 3.316282e-002, 7.174416e-002, 5.648093e-002, -1.244326e-002, 5.660617e-002, 8.555437e-002, -8.515916e-004, -1.289888e-001, 4.829156e-002, 5.614745e-002, -4.951079e-002, -4.770569e-002, 4.911639e-002, -9.377583e-002, -3.659299e-002, 3.209415e-002, 8.991899e-004, -1.351126e-001, -7.143882e-002, -4.327535e-002, -1.588134e-002, -6.017205e-002, 9.265311e-002, 6.845787e-002, -6.931001e-002, 2.140322e-002, -2.035374e-002, 3.182239e-002, -2.930094e-002, -2.049626e-002, 5.508034e-002, -5.530120e-002, 9.055326e-002, 1.007189e-001, 7.318722e-003, 1.278330e-001, -1.423910e-002, -4.553988e-002, 6.078150e-002, -6.211642e-002, -1.021510e-001, 1.159358e-002, 2.122740e-002, -7.880647e-002, -9.851356e-002, -1.146949e-002, 8.500600e-004, -3.696746e-002, -1.164732e-001, -1.427213e-001, 8.099977e-002, 1.108079e-002, 5.053044e-002, 2.893864e-002, -5.338306e-002, 5.227812e-004, -8.826815e-002, -2.721108e-002, -1.985401e-002, 7.071909e-002, 1.249503e-001, -7.167674e-002, -8.266111e-002, 1.188202e-001, 2.507323e-002, 7.135758e-002, 1.575577e-002, -1.383945e-002, 2.511368e-003, 3.237398e-002, 1.180514e-001, 1.445906e-001, -1.240427e-002, -1.397613e-002, -5.234229e-002, -5.412119e-002, -1.830204e-002, -3.227931e-002, 4.635558e-002, 8.187983e-002, 3.707925e-002, 1.379823e-002, -8.057015e-002,

© ISO/IEC 2004 — All rights reserved


Copyright International Organization for Standardization
Provided by IHS under license with ISO
No reproduction or networking permitted without license from IHS
Not for Resale

2.657303e-003, -4.370639e-002, -5.581283e-002, -2.417431e-002, 1.084702e-001, 1.253393e-001, -4.817065e-002, -6.686355e-002, 9.466559e-002, 1.998367e-001, -6.794947e-002, -3.866861e-005, 1.562017e-002, -5.372294e-002, -7.375836e-002, 6.395981e-002, 1.680431e-002, 4.421592e-002, -1.877418e-002, -9.232521e-002, 1.349589e-002, -8.181958e-003, -1.419375e-003, -6.729157e-002},
{-1.232498e-003, 1.020077e-002, -7.990255e-003, 1.468153e-002, -3.747203e-002, -2.486075e-003, 5.121240e-002, -3.382693e-002, -4.420583e-002, -3.382693e-002, 5.121240e-002, -2.486075e-003, -3.747203e-002, 1.468153e-002, -7.990255e-003, 1.020077e-002, 1.065917e-002, -1.779437e-002, 7.838484e-003, 7.209352e-002, 6.253755e-003, -5.861081e-002, -1.165311e-001, 9.961078e-002, -4.158239e-002, -4.661211e-002, 3.157676e-002, -8.585509e-003, 3.148364e-002, -6.153819e-002, -4.406241e-002, 8.599292e-003, -5.496156e-003, 4.177656e-002, 1.165372e-003, 1.120402e-001, -7.776525e-002, -3.667495e-002, 1.398964e-001, -2.051292e-003, -2.225322e-002, -3.108775e-003, 9.749260e-002, -3.489296e-002, -5.173477e-002, 2.268924e-002, 5.224552e-002, -3.590937e-002, 1.980730e-002, 5.553345e-002, 1.153056e-001, -1.345093e-003, -9.641482e-002, 7.038241e-002, -1.781966e-002, 6.558945e-003, -1.059482e-001, 6.776574e-002, -1.769492e-002, 8.686173e-002, -7.282001e-002, -2.873106e-002, 5.185998e-002, 5.223955e-002, -1.426746e-001, -1.257387e-002, -2.908654e-002, 6.894641e-002, -1.004861e-002, 6.331385e-002, -6.077498e-003, 1.902175e-002, 1.022422e-001, -1.776956e-002, 4.309985e-002, 1.819608e-001, 9.932112e-002, -6.520195e-003, -1.193603e-001, -1.230195e-001, 1.799749e-001, 1.510742e-001, 9.665839e-002, -5.345386e-002, 4.866054e-002, -1.042315e-001, -4.348065e-003, -2.607897e-002, -1.990667e-002, 1.038359e-002, 3.411397e-002, -7.966293e-002, 3.233189e-002, 7.162429e-002, 9.284975e-002, 9.193126e-002, -5.130003e-002, -3.315560e-002, -5.971211e-002, -2.493291e-002, -4.785538e-002, 5.912307e-003, 2.018094e-002, -1.550904e-002, -3.692537e-002, 2.292109e-002, -6.367135e-003, 5.634607e-002, 2.286784e-002, 1.673494e-003, -2.346545e-002, 1.861195e-002, -4.118257e-002, 8.065253e-002, -5.625498e-003, -1.054493e-001, -2.539568e-002, 7.593925e-002, -2.306053e-002, 1.721012e-002, 1.302342e-002, -4.292972e-002, 1.972494e-002, 1.096978e-001, -3.530380e-002, -5.423168e-002, -1.520927e-002, 4.719705e-002, -1.334440e-016, -8.021720e-003, -1.649345e-003, -3.727142e-003, 4.648426e-002, -1.526593e-002, -5.168531e-002, 1.472906e-002, -8.553570e-002, -1.472906e-002, 5.168531e-002, 1.526593e-002, -4.648426e-002, 3.727142e-003, 1.649345e-003, 8.021720e-003, 1.159052e-002, -2.606566e-002, 6.053000e-003, -5.614613e-002, 1.631566e-002, -1.935651e-002, 1.600317e-002, -2.732101e-003, -4.038227e-002, -5.696055e-002, -7.407617e-002, 2.092451e-001, -4.210526e-003, -1.112595e-001, -1.292179e-002, 4.329889e-002, 4.066616e-003, -1.759353e-002, -5.819872e-002, -5.456324e-002, 1.394599e-001, -3.594880e-002, -9.740413e-002, -3.178306e-002, 4.790175e-002, -5.945683e-002, -2.009369e-003, 3.068169e-002, 2.364872e-002, 8.415220e-002, 5.503353e-002, 1.316582e-002, 3.419774e-002, -7.003624e-002, -3.667329e-003, 5.933689e-002, 7.542460e-002, 4.622143e-002, -2.383104e-002, 2.613150e-002, 3.509947e-002, -4.505335e-003, 4.220318e-002, -2.709051e-002, -1.314845e-002, -1.683400e-001, 9.012024e-002, 1.340088e-001, -2.372860e-002, 1.249577e-001, 2.477652e-002, -1.681490e-002, 7.486600e-002, -1.130232e-001, 4.615297e-002, 1.635911e-002, 2.435255e-002, 1.065173e-001, 3.315753e-002, -1.304574e-001, -1.284447e-002, -4.729441e-002, 5.727702e-002, -7.989204e-003, -1.076001e-001, -1.406572e-001, -5.812469e-002, 7.935954e-002, 1.346012e-002, -4.803463e-002, -7.478503e-002, 5.339632e-002, 5.621052e-002, 8.308969e-003, 2.855972e-002, -1.506461e-002, 8.314239e-002, 6.893565e-002, 1.343334e-001, -9.325273e-002, -9.887394e-002, -2.414803e-002, -5.628522e-002, -6.432525e-002, -4.423382e-002, 1.051575e-001, 3.791701e-002, -2.595225e-002, -4.034765e-002, 2.929063e-002, -1.459775e-002, 1.181334e-001, 8.700210e-002, -1.244105e-001, -1.174022e-001, 6.303192e-002, 6.685249e-002, -6.814584e-002, 3.188921e-002, 7.370260e-002, 8.832164e-002, -7.447485e-002, 7.950085e-003, -2.648768e-002, 1.167988e-002, -3.400937e-002, -4.438048e-002, 1.721002e-002, 5.543218e-002, -2.158633e-002, 5.560534e-002, 1.625924e-002},
{-1.084693e-004, -3.275048e-005, 1.972500e-002, -2.010857e-002, -2.066496e-002, -1.908735e-002, 8.381697e-002, -1.036101e-001, 8.161228e-002, -1.036101e-001, 8.381697e-002, -1.908735e-002, -2.066496e-002, -2.010857e-002, 1.972500e-002, -3.275048e-005, 3.670559e-004, -5.079480e-002, 6.820346e-002, 7.263131e-002, -3.434434e-002, 3.033042e-002, -4.263745e-002, -1.058347e-003, -9.061468e-002, 1.885726e-002, 3.577186e-002, -2.165005e-001, 1.442068e-001, -1.218212e-002, -1.983760e-002, 1.949360e-002, -4.679286e-002, -3.171250e-002, 6.425630e-002, 7.444137e-002, -5.253339e-002, 2.691757e-002, -7.075942e-002, 6.289165e-002, 3.650961e-002, 2.235099e-002, -1.152967e-001, -7.932884e-003, 1.940507e-004, 1.260579e-001, 1.836617e-002, 6.492731e-002, -6.851537e-002, 3.117415e-002, -2.433970e-002, 2.421058e-002, 1.722978e-002, 9.091689e-002, 4.485122e-002, -3.615804e-002, 2.439457e-002, -1.715601e-002, 2.209431e-002, -8.679708e-003, 2.860848e-002, 7.545150e-002, 2.366751e-002, -9.896727e-002, 3.237921e-002, 1.207892e-001, -6.540726e-002, 1.419034e-001, -9.632437e-002, 4.073281e-002, 1.091471e-001, -4.695265e-003, -5.673724e-002, 1.669715e-002, 6.581135e-002, 3.952650e-002, -1.611480e-001, 8.355267e-002, -1.715351e-002, -6.477924e-002, -3.738911e-002, -1.964476e-001, -7.832829e-002, 6.180613e-002, 3.903783e-002, -7.688448e-002, -6.233585e-003, 2.100280e-002, 3.959558e-002, 4.663289e-002, 4.355881e-002, -6.512700e-002, 1.131827e-001, -7.556250e-002, -4.446096e-002, -3.303058e-002, 7.159178e-002, 8.630300e-003, -3.569631e-002, 9.810933e-003, 3.977320e-002, 2.254279e-003, -9.002279e-002, -2.215435e-002,


--`,,```,,,,````-`-`,,`,,`,`,,`---

© ISO/IEC 2004 — All rights reserved

Copyright International Organization for Standardization
Provided by IHS under license with ISO
No reproduction or networking permitted without license from IHS
Not for Resale

6.980339e-003, -3.097249e-003, -2.645867e-002, 8.062357e-003, 8.457503e-002, 5.263750e-002, -4.430260e-002, 8.900425e-002, 9.441925e-002, 1.934810e-002, -3.130685e-002, 3.656106e-002, -4.000177e-002, -4.796858e-002, -2.094120e-002, -3.640178e-003, -3.148532e-002, 6.586752e-003, -4.932957e-003, 3.395122e-002, -4.092064e-002, -3.238698e-002, -5.528341e-003, 1.695193e-002, -1.261240e-017, 5.283591e-003, -1.090221e-002, 9.910928e-004, -4.327134e-002, 1.926371e-002, 1.844342e-002, -2.501313e-002, -5.847991e-002, 2.501313e-002, -1.844342e-002, -1.926371e-002, 4.327134e-002, -9.910928e-004, 1.090221e-002, -5.283591e-003, 1.804565e-002, 1.182789e-003, 5.827862e-002, 9.702887e-002, -1.753960e-001, -2.072847e-002, 3.289648e-003, 3.557894e-002, -3.269521e-002, 1.082145e-002, 2.734775e-004, 1.050613e-002, 6.001003e-002, -1.492659e-001, -3.292971e-002, -5.789054e-004, 3.076960e-002, -4.764542e-003, -9.043999e-002, 1.642986e-001, 3.446327e-002, 9.337397e-002, -1.163955e-001, -2.760103e-002, 6.473009e-002, -1.563907e-003, 3.134215e-002, -1.939853e-001, 1.593729e-001, 1.100094e-001, 6.037594e-002, 3.890473e-002, -9.092229e-002, -1.036422e-001, -4.602183e-002, -1.883227e-002, 5.262635e-003, -3.131356e-002, 6.027088e-002, -2.623638e-002, -1.543866e-002, 2.916520e-002, 5.039824e-002, 5.631873e-002, -1.576744e-001, -4.110204e-002, 6.439767e-002, 2.496115e-002, -7.185599e-002, -1.080792e-001, -1.657382e-001, 8.723285e-002, 4.862085e-002, 7.848315e-002, -2.291911e-002, 8.870730e-002, -1.230648e-002, 2.051518e-002, -5.161805e-002, 1.384972e-001, -8.514428e-002, -3.466817e-002, 3.656859e-002, -3.412992e-002, 4.314826e-002, -2.277309e-002, 6.503371e-002, -1.252954e-002, -1.272148e-002, 4.271192e-002, 1.841162e-002, -5.701208e-002, 9.907093e-003, -3.166728e-002, 7.978133e-003, -3.233661e-002, 8.713364e-002, -2.024514e-002, 7.275786e-002, 1.101103e-001, 5.536825e-002, 8.150964e-002, -3.186795e-002, -5.059958e-003, -6.626193e-003, -8.027861e-002, 4.635369e-002, -1.340008e-002, -3.115143e-002, -2.284289e-002, 2.861806e-002, -6.470227e-003, 7.064943e-003, -1.802669e-002, -3.510587e-002, 3.659431e-002, -3.483973e-002, -2.114751e-002, 1.187383e-002, -5.128383e-002, -7.104005e-002, 1.929101e-003, -2.611369e-002, 8.542343e-002, 4.585866e-002, 3.268975e-002, 1.268378e-003, 6.062888e-003, -9.074545e-002, 4.880366e-002, 1.294308e-002, -1.041392e-001},
{1.600644e-003, 4.882891e-003, 2.606534e-003, -4.425811e-002, 9.564189e-003, -1.320083e-002, 4.151217e-002, 5.971105e-003, -2.341280e-002, 5.971105e-003, 4.151217e-002, -1.320083e-002, 9.564189e-003, -4.425811e-002, 2.606534e-003, 4.882891e-003, 1.472711e-002, -1.426996e-002, 1.799333e-002, -1.233965e-001, -2.175641e-002, -4.685427e-002, 6.211783e-002, -1.624764e-003, -1.516486e-003, 2.443717e-003, 9.742089e-002, -6.398630e-002, 7.522909e-003, -6.598042e-002, -1.252627e-002, 3.065868e-002, 7.510918e-002, -3.076254e-002, 6.978252e-002, -3.135102e-002, -7.423053e-002, -7.832347e-002, -2.473791e-002, 7.898320e-002, 9.591125e-002, 1.048850e-001, -3.698487e-002, -2.516647e-002, -9.036005e-002, 8.849040e-003, 8.911472e-002, 7.497769e-002, -7.586769e-002, 5.079676e-002, -1.979234e-002, 6.485813e-002, -1.397135e-001, 9.540507e-002, -3.544286e-002, -8.945126e-002, 5.791157e-002, 6.443738e-004, -3.491792e-002, -4.679283e-002, -3.900969e-002, -4.905722e-004, -3.218484e-002, -8.851310e-002, 1.535721e-002, -1.545515e-001, 3.939600e-002, -2.512268e-002, 2.059566e-002, 2.681483e-002, -4.676591e-002, -4.292912e-002, -1.670369e-002, -1.075021e-002, -3.150669e-002, 2.112129e-002, -1.706439e-002, 9.840121e-002, 3.806532e-002, 1.568364e-001, 7.783263e-002, 1.316912e-001, 1.415062e-001, 1.307830e-001, 4.547782e-002, -8.637016e-002, 3.578149e-002, 3.251223e-002, -1.109400e-002, -3.506617e-002, 7.647675e-003, 1.687290e-003, -2.863170e-002, 8.178275e-002, 1.856604e-002, 1.208980e-001, 9.963666e-002, 5.122560e-003, -2.844056e-002, 2.050331e-002, 4.239752e-002, 6.961571e-003, -4.959087e-002, -2.337992e-002, 2.674826e-002, -4.343953e-002, -8.219455e-002, -2.412448e-002, -4.781688e-002, 6.380377e-002, 6.245162e-002, 6.849808e-002, -2.659747e-002, -7.587419e-004, 5.564914e-002, -5.500462e-002, -1.158606e-002, -1.083838e-001, 1.919200e-002, 2.185153e-002, 3.166452e-002, 2.189525e-002, 7.731183e-002, -2.057976e-001, -2.705688e-002, 3.717533e-002, 7.172866e-002, -1.652085e-001, -1.458113e-017, -1.133041e-002, -1.979088e-003, 9.451380e-003, -1.602425e-002, 6.177206e-003, -3.290446e-003, 2.796066e-002, 5.359453e-002, -2.796066e-002, 3.290446e-003, -6.177206e-003, 1.602425e-002, -9.451380e-003, 1.979088e-003, 1.133041e-002, -1.167448e-003, 3.385116e-002, -2.319324e-003, -5.361623e-002, -5.194561e-002, 9.552376e-003, 1.114874e-001, -5.508935e-002, -6.133356e-002, 3.030422e-002, 1.339649e-001, -1.675107e-001, 5.662207e-002, 9.058686e-003, 2.707134e-002, -4.715102e-002, 7.916800e-003, 3.816722e-002, -7.906758e-002, -2.599809e-002, 9.873420e-002, 2.443166e-002, 3.490147e-002, -1.310040e-001, -8.107703e-002, 1.296968e-003, -5.279667e-002, -4.563145e-002, 5.232937e-002, 3.306951e-003, 8.065531e-002, -1.955229e-002, 1.253305e-001, 2.243495e-004, 3.923134e-003, 1.713106e-002, -2.219490e-002, 6.478442e-002, -9.639509e-002, 8.284867e-004, -3.150394e-002, -2.655632e-002, 4.630128e-002, -4.034388e-002, -4.412611e-002, 1.865327e-002, 3.516730e-002, 7.491406e-002, -3.753006e-002, 4.191693e-002, 2.103462e-002, 6.809101e-002, -5.859398e-002, -2.125465e-002, 3.426583e-002, 1.882268e-002, -5.218333e-002, 4.900054e-002, 2.386437e-002, 1.033393e-001, -1.427604e-001, 7.654315e-002, -2.779706e-002, -1.099913e-001, -1.590053e-002, 7.073054e-002, 3.335711e-002, 1.414339e-002, -9.255488e-002, 1.026105e-001, 4.327306e-003, -7.869591e-002, 6.374612e-002, -1.316450e-001, -1.291456e-002, 8.549902e-002, -2.287149e-001, 7.086627e-002, 2.412340e-002, -4.232806e-002, 1.633391e-002, 6.580902e-002, -6.418447e-002, -1.112838e-001, 5.346313e-002, 6.385160e-002, -4.884236e-002, 5.718659e-002, -

© ISO/IEC 2004 — All rights reserved


Copyright International Organization for Standardization
Provided by IHS under license with ISO
No reproduction or networking permitted without license from IHS
Not for Resale

1.081321e-002, 1.022566e-001, -1.818516e-002, -6.934262e-003, 5.761995e-002, -5.791279e-002, 5.414916e-002, -1.168892e-001, 2.767715e-002, 1.203019e-001, -4.164251e-003, 5.898768e-002, -1.237638e-002, -1.616053e-003, 7.224084e-002, -4.681776e-002, 8.008147e-003, -3.885160e-003, 5.180102e-002, 1.008272e-001, -8.007468e-002, 1.902045e-002, -5.695492e-002, -4.611703e-002},
{-2.852691e-004, 8.876636e-004, 1.475386e-002, -2.581229e-002, 1.075760e-002, 2.056363e-002, 6.921526e-003, 4.414481e-002, -1.680786e-001, 4.414481e-002, 6.921526e-003, 2.056363e-002, 1.075760e-002, -2.581229e-002, 1.475386e-002, 8.876636e-004, 1.108549e-002, -1.482358e-002, 3.099107e-002, -4.347717e-002, 2.884349e-002, -7.221260e-003, -5.211287e-002, -1.287954e-001, 4.834574e-002, -6.831183e-002, 4.454134e-002, 7.158477e-003, -3.638452e-002, 3.634277e-002, -9.777672e-003, -1.835579e-002, -2.712560e-002, 4.100988e-002, 1.289694e-001, 4.012853e-002, -3.089888e-004, -3.366551e-002, 2.785563e-002, 2.303845e-002, 2.605758e-002, 1.624857e-002, -1.280258e-002, 1.841176e-002, 5.160499e-003, -5.351332e-002, -2.428412e-002, -5.494130e-002, -4.432810e-002, -1.406319e-001, -2.047588e-002, -2.238153e-004, 1.694493e-001, -9.328658e-002, -3.668198e-002, 5.909688e-002, -1.139236e-002, 4.480289e-002, 6.627994e-002, -1.021455e-001, 3.522487e-002, 4.161878e-002, 1.298338e-002, 8.298080e-002, 5.501052e-003, 4.638325e-002, 1.546396e-001, -2.908799e-002, 6.428726e-003, -2.475707e-002, -4.850972e-002, -8.628102e-002, -6.421087e-002, -9.325192e-002, -9.174280e-002, 5.633850e-002, -1.466551e-001, 1.090204e-001, -5.084064e-002, -1.561104e-001, 3.534147e-002, 3.094762e-002, 6.468132e-002, -3.849969e-002, -5.346810e-003, 1.329816e-001, -1.049156e-001, 6.003683e-002, 4.802555e-002, 2.397842e-002, -5.188952e-002, -1.437963e-002, -9.504423e-002, 1.019913e-001, 1.878942e-001, 7.275986e-002, -2.519070e-002, 4.419599e-002, -2.247311e-002, 1.004602e-001, 2.191465e-002, -8.413045e-002, 5.390674e-002, -3.996031e-002, 2.233984e-002, -6.905928e-003, 7.672717e-002, 9.727786e-003, -4.958440e-002, -4.689793e-002, 2.491466e-002, 2.457699e-002, -9.961764e-002, -1.450743e-001, -3.360050e-002, 1.339159e-001, 4.757093e-002, -9.249431e-002, 4.106363e-003, -4.331890e-002, -1.949518e-002, -2.363421e-002, 3.673422e-002, 3.519563e-002, -2.733957e-003, 2.572470e-002, 1.036655e-001, -5.008375e-002, 8.927929e-017, -4.951394e-003, 4.029538e-003, 4.476839e-003, 1.249190e-002, 9.420589e-003, -4.198285e-003, -3.670846e-003, 8.153913e-003, 3.670846e-003, 4.198285e-003, -9.420589e-003, -1.249190e-002, -4.476839e-003, -4.029538e-003, 4.951394e-003, 5.770146e-003, -3.973221e-002, -4.262943e-002, -6.455021e-002, 3.660997e-002, -3.658398e-002, -2.416236e-002, -6.463653e-003, 1.546905e-002, 4.679552e-002, 1.133140e-001, -1.002996e-001, -3.481765e-002, -1.379976e-002, 4.229042e-002, -1.733220e-002, 2.281372e-003, 7.406564e-003, 7.888442e-002, 3.897181e-002, 8.069808e-002, 5.294473e-002, 3.414255e-002, -6.306740e-002, -8.377416e-002, -3.884941e-003, -7.053644e-002, -4.063016e-002, -1.041011e-001, 1.159127e-001, -1.499749e-002, -2.851548e-002, -1.203929e-002, -3.932810e-003, 1.126687e-001, -4.552431e-002, -4.843754e-002, 5.171122e-002, -5.542296e-002, 1.131852e-001, -3.034251e-002, -4.743839e-002, 4.240002e-002, 1.249691e-001, 2.213431e-002, -4.837521e-002, -6.649116e-002, -2.960285e-002, -4.958340e-002, -1.530073e-001, -1.304539e-001, 5.900632e-002, 1.008515e-001, 3.071605e-002, 4.239277e-002, -7.711873e-002, -6.297372e-002, -1.564993e-002, 1.644573e-002, 3.497836e-003, 1.238407e-002, 8.747401e-002, 1.351777e-001, -1.387169e-002, -2.214719e-002, 9.056837e-002, -2.424214e-002, 1.302511e-001, -6.753041e-002, -6.293158e-002, 4.558732e-003, 4.796001e-002, -9.746751e-003, 1.584373e-002, 2.586703e-002, -2.618587e-002, -2.567956e-002, -5.600411e-002, 1.562979e-001, 4.550569e-002, 3.156938e-003, -7.456475e-002, -5.251099e-002, 1.922114e-001, 5.442561e-002, -4.015541e-002, -4.547906e-002, 3.274858e-002, -5.013574e-002, -2.861308e-002, -3.312620e-002, 1.299498e-001, 2.332918e-002, -1.661483e-002, 4.170236e-002, 6.706998e-002, 2.374081e-002, 1.609193e-001, -1.939790e-002, -4.346185e-002, 6.097729e-002, -2.291708e-002, -5.131960e-003, -1.759341e-002, 6.249291e-003, -5.588304e-002, -3.475360e-002, 1.741204e-003, -8.975667e-003, 5.717214e-002, 7.319125e-002, 4.345933e-002},
{1.220015e-003, 1.046472e-002, -1.304258e-002, -1.072692e-002, 1.127600e-001, -8.109581e-002, -7.096768e-002, 6.245303e-002, 8.544846e-002, 6.245303e-002, -7.096768e-002, -8.109581e-002, 1.127600e-001, -1.072692e-002, -1.304258e-002, 1.046472e-002, -1.197583e-002, -1.764496e-002, 2.223547e-002, -9.966299e-002, 1.324608e-001, -9.047014e-002, -2.777272e-002, 2.260978e-002, 6.385822e-002, 5.474427e-002, -4.904498e-002, -7.583778e-002, 8.861791e-002, 2.078516e-002, -2.083767e-002, 5.731134e-003, 2.387346e-002, -1.434465e-002, -5.075961e-002, 4.424623e-002, -3.675384e-002, 9.068176e-002, 4.052738e-002, -1.111035e-001, 1.755652e-002, -3.433308e-002, 6.572817e-002, -2.221841e-002, 7.130027e-002, 4.723417e-002, -2.476466e-002, -2.692277e-003, -3.166910e-002, 5.998811e-002, 3.902450e-002, -2.540289e-002, 2.608659e-002, 1.312523e-001, -2.783474e-002, -2.092632e-002, 1.065973e-001, 1.235478e-001, 4.541801e-003, -8.225689e-002, -7.212715e-002, 1.751850e-001, 1.225640e-002, -8.178038e-002, -5.845743e-002, 1.287023e-002, 3.699208e-002, -1.427927e-001, 1.011580e-001, -7.913622e-002, -1.081810e-001, 3.308859e-002, 9.356705e-003, 6.194690e-003, -2.444632e-002, -1.587550e-002, 9.810263e-002, 1.481752e-001, -8.304745e-002, -1.603427e-003, -1.977577e-002, -1.237575e-001, -1.185794e-001, 5.857244e-002, 1.308645e-001, 3.097103e-002, -1.155527e-002, 3.946289e-003, -2.710912e-002, -9.757978e-003, -2.442814e-002, -1.045622e-002, 5.476805e-002, -1.404428e-001, -2.984744e-002, -1.943749e-001, -7.802211e-002, -3.939331e-003, -4.908991e-002, 4.765058e-003, 1.367307e-003, 2.428883e-002, 7.862716e-002, -2.024032e-003,


© ISO/IEC 2004 — All rights reserved

Copyright International Organization for Standardization
Provided by IHS under license with ISO
No reproduction or networking permitted without license from IHS
Not for Resale

5.837993e-002, -4.294786e-002, 1.112884e-002, -4.002508e-002, -4.267592e-002, -1.542955e-002, 1.020625e-001, 5.863936e-002, -7.673668e-002, -4.086491e-003, -1.571664e-002, 8.162476e-002, 3.870200e-002, 3.650257e-002, -1.486873e-002, 1.669106e-002, -2.820890e-002, 1.509477e-002, 1.563430e-002, -8.346609e-003, -1.026028e-001, 1.290227e-001, 3.090948e-002, 1.245785e-002, 3.496568e-017, -1.848205e-003, 1.769398e-002, -1.461672e-002, 5.162690e-003, 1.242960e-002, -2.278313e-002, 3.442067e-002, 1.670279e-002, -3.442067e-002, 2.278313e-002, -1.242960e-002, -5.162690e-003, 1.461672e-002, -1.769398e-002, 1.848205e-003, 2.087108e-002, -4.551680e-002, 4.730782e-002, -4.730403e-002, 7.325517e-002, 1.025936e-001, 7.228590e-003, -5.415923e-002, -5.289176e-002, -6.616054e-002, 9.487731e-002, -6.210822e-002, -7.218327e-003, 5.875307e-003, 3.446957e-002, 1.444524e-002, -1.981272e-002, 3.486570e-002, 9.211725e-003, -7.882894e-002, 4.345428e-002, 4.890229e-002, 1.192999e-002, -8.011961e-002, -5.479786e-002, 1.258487e-001, -8.772175e-003, 4.737090e-002, -2.106886e-002, 6.747751e-002, 1.648959e-002, 4.297452e-002, -2.070501e-002, -4.281773e-002, -1.488367e-001, 2.413523e-002, -1.106274e-001, -3.825910e-002, -8.031329e-002, -1.102581e-002, -1.504287e-002, -7.866956e-002, 1.737894e-002, -1.405339e-001, -5.887969e-002, -2.714791e-002, -1.358196e-002, -8.866878e-002, -7.528575e-002, 5.180801e-002, -5.754923e-002, 1.078842e-001, 5.793902e-002, 1.274984e-002, 5.108579e-002, -1.841297e-002, 2.620423e-002, 3.424908e-002, 1.414564e-001, 1.482243e-001, 1.660857e-002, 2.669802e-002, 1.058535e-001, -4.972886e-002, -1.376390e-002, -1.144734e-001, -1.804716e-001, 4.289194e-003, 9.593812e-002, 4.826397e-002, 2.689361e-002, 9.026395e-002, -6.306801e-004, 7.588010e-002, -7.044501e-002, -1.883171e-002, -6.475743e-002, -1.621780e-001, 5.885066e-003, 1.535446e-002, -6.206345e-002, 5.316705e-002, -3.017109e-002, -4.566155e-003, 6.046445e-002, 2.419885e-002, -1.375270e-002, -7.876385e-003, 4.637118e-002, 2.111202e-002, -2.538789e-002, 4.019870e-002, 8.512310e-003, 4.825626e-004, -3.476359e-002, 7.426987e-002, 2.003461e-002, -7.794512e-002, 7.078801e-002, 5.116070e-002, 7.841439e-002, -2.627514e-002, 1.618572e-002, -1.939676e-002, 6.424414e-003, -3.521733e-002, 5.635061e-002, -3.477562e-002, 4.561137e-002, -4.759240e-002, -9.972992e-003, -2.543250e-002},
{-1.722593e-003, 1.780269e-003, -5.367424e-003, -1.114587e-002, -8.473438e-003, -6.265602e-002, 7.478492e-002, 2.796543e-002, -1.148250e-001, 2.796543e-002, 7.478492e-002, -6.265602e-002, -8.473438e-003, -1.114587e-002, -5.367424e-003, 1.780269e-003, 1.250382e-002, -3.879206e-002, 5.811506e-002, -3.022743e-002, -4.682770e-003, -1.614639e-001, 7.664339e-002, 4.196637e-002, -1.046082e-002, -1.362633e-001, -3.769612e-002, 8.084379e-003, 7.434053e-002, -1.734833e-002, 4.495256e-003, 5.155570e-002, -5.268416e-002, -5.327615e-002, -3.925336e-002, -5.682593e-002, -5.719501e-002, 1.182317e-001, -2.913647e-002, -5.262468e-002, -3.382815e-002, -1.293451e-002, -2.133227e-002, 1.025793e-001, 2.191289e-002, -1.208938e-002, -1.228574e-001, -5.043087e-002, 5.087332e-002, 1.150676e-001, -3.819248e-003, 1.360116e-002, -5.317077e-002, -1.349747e-002, -6.389681e-002, 2.841422e-002, 5.242157e-003, -3.730868e-002, 3.180360e-002, 9.973403e-002, -1.328791e-002, 6.035599e-002, -1.588203e-002, -2.459686e-002, 8.696991e-002, 4.225647e-002, 7.635351e-003, 6.865733e-002, 1.374206e-001, -5.599171e-002, 4.300796e-002, -5.187390e-002, -3.948336e-002, -5.198748e-002, -2.335721e-002, -6.421349e-002, -1.046237e-001, -1.386634e-001, -8.823862e-002, 9.636697e-002, 5.468978e-002, 5.788303e-002, -1.710720e-001, 4.841814e-002, -3.843641e-002, -5.150407e-002, -7.620949e-002, -3.516164e-002, 3.945384e-002, 4.808340e-002, 2.058173e-002, -2.622296e-002, 1.207518e-001, -2.187049e-002, -3.446515e-002, 1.231123e-001, 9.588829e-002, -4.125228e-002, -6.521704e-002, 2.284242e-002, 2.276236e-003, -3.119360e-002, 1.171921e-002, 6.293179e-002, -5.929708e-003, 8.355198e-002, -9.206882e-003, 2.012200e-002, 2.061605e-002, -5.146752e-002, -8.519554e-002, -1.916828e-002, 8.743368e-002, -2.283267e-002, -1.186738e-001, 1.251229e-001, 3.785308e-002, 7.214463e-002, -9.666092e-003, -7.976313e-003, 3.413352e-002, -1.576814e-002, -1.314387e-002, 9.652125e-002, -2.001924e-004, 5.706208e-002, -1.825878e-001, 3.222158e-002, 2.107667e-017, 5.419784e-003, 4.761976e-003, -2.376586e-002, 4.102195e-002, -6.366813e-003, -1.598837e-002, -6.879569e-002, -2.716480e-002, 6.879569e-002, 1.598837e-002, 6.366813e-003, -4.102195e-002, 2.376586e-002, -4.761976e-003, -5.419784e-003, 1.976200e-002, -2.337778e-002, -1.380873e-002, -2.218583e-002, 7.955883e-002, -1.200430e-001, -1.279203e-002, 3.560556e-002, -7.155626e-002, -9.778140e-003, -4.293644e-002, -3.295094e-002, -8.044076e-002, -2.308772e-003, 6.303456e-003, -2.025235e-003, -2.994917e-002, 5.192450e-002, 4.450083e-002, 1.119762e-003, 1.475368e-001, -1.074084e-001, -2.031142e-002, -4.060915e-003, 6.305293e-002, -4.704676e-002, 6.716489e-002, -2.079342e-002, 9.536234e-003, 2.780060e-002, -1.276267e-002, 1.389567e-002, 1.911699e-002, 2.026716e-002, -1.461619e-001, -2.752263e-002, -1.324255e-002, 1.686711e-002, -1.700461e-002, 3.751953e-002, -1.700448e-002, 4.162686e-002, -5.863626e-002, -9.782078e-003, -2.740625e-002, -4.900593e-003, 6.838282e-002, -1.268985e-001, 4.611919e-002, -6.930211e-002, 2.886098e-002, 1.309251e-001, -3.511029e-002, 5.701914e-002, 2.355234e-002, -2.548797e-002, -1.943060e-002, -6.769741e-002, 1.487873e-002, -1.747522e-002, -5.795556e-002, 8.463309e-003, 9.117422e-004, 2.603996e-001, 1.032728e-001, -5.470785e-003, 2.501803e-002, 8.241685e-002, -5.932018e-002, -1.364953e-001, 1.597149e-002, 6.045119e-003, -3.073608e-002, -4.663449e-002, 4.177186e-002, 1.757803e-002, -6.381957e-002, 1.272230e-002, 1.469582e-001, -1.383678e-001, -4.354135e-002, 1.975018e-002, 1.769410e-004, 7.015430e-002, 8.676157e-002, -9.192926e-002, 3.347308e-002, -9.998497e-003, -

© ISO/IEC 2004 — All rights reserved


Copyright International Organization for Standardization
Provided by IHS under license with ISO
No reproduction or networking permitted without license from IHS
Not for Resale

5.051796e-002, -3.044816e-002, 2.737041e-002, -1.156886e-001, 5.402859e-002, -8.694023e-002, -2.454518e-002, 4.399195e-002, 1.035081e-001, 6.205098e-003, -1.246976e-003, -3.115366e-002, 7.110405e-002, -4.910616e-002, -1.010144e-001, 1.411443e-002, -2.495932e-002, 3.144784e-002, -6.951137e-002, -3.870980e-002, 1.565442e-001, -4.397370e-002, -3.734414e-002, 6.290483e-002},
{-1.623077e-003, 7.681930e-003, -1.734145e-002, 5.477855e-004, -1.906189e-002, -1.922174e-002, 3.927393e-002, 5.679628e-002, -1.032141e-001, 5.679628e-002, 3.927393e-002, -1.922174e-002, -1.906189e-002, 5.477855e-004, -1.734145e-002, 7.681930e-003, 1.545868e-002, 4.363525e-003, 1.606850e-002, 3.181071e-002, -1.190141e-001, 2.745687e-002, 1.873959e-002, -6.479378e-002, 1.423167e-001, 4.216965e-002, -5.374253e-002, -1.671735e-001, 2.883638e-004, 1.378818e-001, -3.433335e-002, 1.793801e-002, -1.488399e-002, -2.772227e-004, -7.195769e-002, -3.934100e-003, 1.437214e-002, 1.030980e-001, -4.960105e-002, 1.823605e-002, -1.945175e-002, 2.721123e-002, 2.787877e-002, 6.463327e-002, -3.242750e-003, -8.151749e-002, -9.332829e-002, 4.923376e-002, 6.634417e-002, -5.549562e-003, -1.125605e-001, 1.176456e-001, -1.020723e-001, -3.515389e-002, 9.844710e-003, -8.616394e-002, -1.771848e-002, 1.748530e-003, 5.440327e-002, 1.807179e-002, 6.466035e-002, -8.382487e-003, 2.361279e-002, 7.221048e-002, 2.647303e-003, 1.282607e-001, -2.475884e-003, 1.039081e-001, -6.455713e-002, 8.601603e-003, 2.442538e-002, 4.692251e-002, 7.141676e-003, -5.026953e-002, -3.500455e-002, 2.714796e-003, -9.475968e-002, -4.226999e-003, 5.266327e-002, -7.335479e-003, -1.434180e-002, 2.179398e-002, 8.342259e-002, 2.201188e-002, -3.674129e-002, 1.623114e-002, 4.312673e-002, 1.433930e-002, -6.921577e-002, 9.159543e-003, 3.040214e-002, -6.187461e-002, 3.798407e-002, -3.798185e-002, 5.554565e-002, -1.111966e-002, -5.987482e-002, -8.429057e-002, -1.159446e-001, 5.543864e-002, -1.067671e-002, -3.309390e-002, -4.185787e-004, -2.191976e-002, 4.668359e-002, 3.073104e-002, -7.616868e-003, 2.936056e-002, 3.509838e-002, -6.205135e-002, 6.749051e-002, -1.276790e-001, 4.646514e-003, 1.319026e-001, -1.509769e-001, -7.163463e-003, 3.160387e-002, -1.801188e-002, -5.302043e-002, 3.259694e-002, -1.292927e-002, -6.956630e-003, 3.451271e-003, 6.155974e-002, -1.004124e-001, -2.212049e-002, 2.000675e-002, 5.330945e-002, -1.666302e-017, -2.655908e-003, 1.736984e-002, -3.366511e-002, -3.904297e-002, 6.772229e-002, -1.790543e-002, 3.036586e-002, 2.780301e-002, -3.036586e-002, 1.790543e-002, -6.772229e-002, 3.904297e-002, 3.366511e-002, -1.736984e-002, 2.655908e-003, -2.540641e-002, 3.275074e-002, 7.134122e-002, -1.598569e-002, -6.124024e-002, 2.564727e-002, -6.397421e-002, 1.146658e-001, -1.054595e-003, 1.128987e-001, 7.883281e-002, -2.685118e-002, -4.401024e-002, 4.759278e-002, -1.035444e-001, 1.624100e-002, 2.613973e-002, 4.497944e-002, -4.229826e-002, 1.757235e-002, -5.746632e-003, 1.320037e-001, -8.718306e-002, -7.338990e-002, -2.164722e-002, -6.744045e-003, 3.533732e-002, 1.780603e-001, -1.913183e-001, -1.298670e-001, 7.714323e-002, -3.170350e-002, -1.089589e-002, -5.161758e-003, -4.916299e-003, 3.811662e-002, 3.357690e-002, -1.095507e-001, -8.965361e-003, -7.468479e-002, 9.578009e-003, -6.116329e-002, -5.270550e-002, -1.289812e-002, 5.589833e-002, -1.891498e-001, -9.806137e-003, 3.635421e-002, 7.179768e-002, -4.517363e-002, -4.326148e-002, 8.044198e-002, 2.398295e-002, -4.172935e-002, -1.026121e-002, 7.621579e-002, -1.119105e-001, -7.298212e-002, -1.336303e-001, -1.507528e-001, 6.155925e-002, -2.175731e-001, 2.366305e-002, 8.703394e-002, -6.537742e-002, -9.336448e-002, -3.869613e-002, -1.767352e-002, 1.822351e-002, 3.324388e-002, 2.297185e-003, 1.097366e-002, 4.937980e-002, 4.417158e-002, -8.549678e-003, 9.112692e-003, 1.348344e-001, -1.606597e-001, 3.275926e-002, -3.793576e-002, -3.221366e-002, 1.154482e-002, 2.450505e-002, 8.636554e-003, 1.753501e-002, 1.998084e-002, 1.127070e-002, 1.452555e-002, 2.125378e-002, 1.804570e-003, -2.013055e-002, 9.765862e-002, -6.268615e-002, 3.358261e-002, 9.089812e-003, 1.426003e-001, 5.976935e-002, 5.531751e-003, 9.902535e-002, 2.682426e-002, -8.732840e-002, 4.125373e-002, 7.164807e-002, 2.002951e-002, -1.586557e-002, -6.915358e-002, 6.345184e-002, -1.540797e-002, -8.080711e-002, 5.354089e-002, 4.998638e-002, -2.326046e-002},
{1.094604e-003, 1.220726e-002, -7.284966e-003, 9.214563e-003, -5.702519e-002, 1.454842e-002, 3.147122e-002, -3.818136e-003, 2.159753e-002, -3.818136e-003, 3.147122e-002, 1.454842e-002, -5.702519e-002, 9.214563e-003, -7.284966e-003, 1.220726e-002, 8.979816e-004, 2.316496e-002, 2.171627e-002, 7.652556e-002, 5.110693e-002, -3.262313e-002, 4.558335e-002, -4.749107e-002, -9.837413e-002, 1.221618e-002, -1.179368e-001, 8.958025e-002, 1.075364e-001, 1.004675e-002, -1.430754e-002, -7.735945e-002, 4.071756e-003, 5.808446e-002, 2.453712e-003, -1.968426e-001, 9.151450e-002, 5.294882e-002, 7.325912e-004, 1.827443e-001, 8.358646e-002, 2.353887e-002, 8.205107e-002, 7.084816e-002, -6.694584e-002, -5.852234e-003, -5.029959e-002, -2.229192e-002, -8.211772e-003, -3.505049e-002, -2.393183e-002, 7.150683e-003, 1.720178e-002, -6.330128e-002, 6.357783e-002, -1.423485e-002, 1.345058e-002, -5.822969e-002, 4.837823e-002, 7.996877e-002, -1.815662e-001, -8.604569e-002, 5.921960e-002, 4.160927e-002, 3.648975e-002, 7.293033e-002, 2.944319e-002, -1.801203e-001, -2.989123e-002, 4.011856e-002, 8.966553e-002, -1.614176e-003, -4.934108e-002, 6.842427e-003, -3.143950e-002, -1.641572e-002, -1.185505e-001, 8.253807e-003, 4.282464e-002, 2.642484e-002, -5.886938e-002, -1.597449e-002, 6.826179e-002, -2.157681e-001, -2.938010e-003, 3.094220e-002, -1.278566e-002, -2.520530e-002, -7.356883e-002, 1.005873e-002, 2.915297e-002, -1.828227e-002, 5.283413e-002, 2.884380e-002, 2.919470e-002, -4.976651e-002, -1.475561e-002, 5.557506e-002, 6.148315e-002, -2.927373e-002, 2.365361e-002, -2.275600e-002, -1.203126e-001, -2.246440e-002,


© ISO/IEC 2004 — All rights reserved

--`,,```,,,,````-`-`,,`,,`,`,,`---

Copyright International Organization for Standardization
Provided by IHS under license with ISO
No reproduction or networking permitted without license from IHS
Not for Resale

4.431733e-002, -2.374698e-002, -8.031550e-002, -6.584985e-003, 4.058467e-002, -1.320903e-001, 1.132275e-001, 5.762726e-002, 7.674507e-002, -1.188208e-001, -5.034584e-002, 5.556557e-002, -1.076050e-001, -9.713532e-002, 2.682654e-002, -2.991559e-002, 3.173696e-003, 3.209486e-002, 1.025961e-002, -2.988111e-002, -1.495022e-002, -5.807645e-002, 2.120668e-002, 1.684945e-002, -6.395325e-018, 1.256949e-003, 3.453314e-002, -3.645569e-002, 1.914689e-002, -1.319182e-002, 3.981451e-002, -1.030370e-002, 8.995167e-002, 1.030370e-002, -3.981451e-002, 1.319182e-002, -1.914689e-002, 3.645569e-002, -3.453314e-002, -1.256949e-003, 4.845900e-003, -4.193278e-002, 7.004083e-003, -1.076239e-001, 4.388872e-002, -1.165702e-001, 2.782885e-002, 7.933560e-002, 6.535720e-003, 1.147202e-001, -1.169132e-001, 3.383534e-002, -5.918408e-002, 5.561440e-002, 1.086517e-002, 6.474082e-002, -7.062843e-003, -7.161523e-002, 1.738989e-002, -3.285009e-002, 1.229553e-001, 2.550986e-002, -9.762950e-002, -2.038280e-002, 2.348986e-002, -7.543751e-002, 4.032820e-002, -4.310782e-002, -2.914491e-003, 4.294254e-002, 2.331290e-002, 6.685552e-002, -1.519727e-002, 2.122124e-002, -3.159758e-002, -1.252744e-001, -1.783368e-002, 2.389962e-002, 1.024771e-002, -3.596936e-002, 9.751558e-002, 3.360213e-004, -8.701719e-002, -1.230590e-002, -1.213223e-001, -4.467365e-002, 1.306890e-001, -1.304388e-001, -5.604732e-002, -6.346954e-002, 4.815851e-002, -1.232096e-001, 3.994914e-002, -9.826680e-004, -5.862459e-002, 2.394656e-002, -5.118326e-003, 3.551761e-002, -1.954753e-002, 4.913403e-002, -1.325320e-002, 3.010703e-003, -8.060026e-002, -5.890311e-002, 1.440888e-001, 1.584929e-001, 4.633661e-002, 5.229720e-002, -2.924424e-002, -1.676622e-002, 4.680303e-003, -9.429746e-002, 1.705913e-002, -5.822124e-002, 5.513041e-002, -1.461769e-002, -7.420782e-002, -9.301795e-002, 1.367973e-001, 3.890780e-004, 3.428507e-003, -3.565752e-002, 3.639251e-002, 6.837252e-002, -4.305900e-002, -9.338916e-002, -3.278766e-003, 6.972697e-002, 2.557903e-002, 9.245610e-002, -2.470402e-002, -1.523002e-002, -8.122937e-002, -4.390951e-002, 4.322437e-002, 7.812164e-002, -3.616848e-002, -2.041406e-003, -1.622306e-002, -1.341090e-001, -8.060988e-002, 6.426665e-002, 1.759106e-002, 3.939423e-002, 1.174558e-002, -1.284436e-002, 8.772007e-002, 4.600166e-002, -6.018570e-002, 7.987570e-002, -6.153426e-002, -2.765308e-003},
{-2.208912e-003, 1.759118e-004, -8.731582e-003, -2.941285e-003, 4.025864e-003, 4.304506e-002, -9.454951e-002, 5.155308e-002, 7.829180e-002, 5.155308e-002, -9.454951e-002, 4.304506e-002, 4.025864e-003, -2.941285e-003, -8.731582e-003, 1.759118e-004, -5.810813e-003, -5.348901e-002, -1.124670e-002, 8.334158e-002, -6.073981e-004, -6.066175e-003, -1.393663e-002, 9.673847e-002, -5.226914e-002, 8.229260e-003, 1.313045e-001, -5.018865e-002, -6.785708e-002, 4.083963e-002, 1.596191e-002, 5.830600e-002, -5.459331e-003, 3.404033e-002, -1.025296e-001, -6.486761e-002, 9.501064e-002, -1.551036e-002, -2.025826e-002, -3.114181e-002, -4.554706e-002, 3.828322e-002, 3.012466e-003, -6.133732e-003, -4.255122e-002, 9.421365e-002, 5.864725e-002, -6.605648e-002, -4.545290e-002, -6.842571e-003, -1.868153e-002, 5.641361e-002, -1.282992e-002, -1.263713e-002, 7.552505e-002, 1.127363e-002, -6.023776e-002, -1.148306e-001, -3.667680e-002, -3.901452e-002, 8.604884e-003, 6.010321e-002, -9.185784e-002, -3.992616e-002, 2.079222e-002, 7.612060e-002, 9.280683e-002, -7.534856e-002, 4.293324e-002, -3.352969e-002, -3.087966e-003, -4.229201e-003, -1.685070e-002, 8.165542e-002, -7.895412e-002, -4.537406e-002, 4.134334e-002, -1.887869e-002, 5.035580e-002, -5.354265e-002, 1.126888e-001, 8.919606e-003, 7.095647e-002, 1.206825e-002, 5.512021e-002, -7.716926e-002, -5.398680e-002, 4.331534e-002, 8.658093e-002, 4.908194e-002, 1.091467e-002, 9.828467e-002, 4.903083e-002, 7.621516e-002, -9.134191e-002, 1.681367e-001, 8.049784e-002, 2.361858e-002, -4.114394e-002, -5.945891e-002, -3.443641e-002, 6.771421e-002, -2.231211e-002, -2.174660e-002, 2.436200e-002, -8.759987e-002, 7.063740e-002, 1.438100e-001, -1.778707e-002, 5.752059e-002, 5.605938e-002, -1.127185e-001, 5.359215e-002, -7.536641e-002, 1.208845e-002, 1.026969e-001, -4.664096e-002, -2.440980e-002, 2.286280e-002, -3.441475e-002, -2.781471e-002, 5.826567e-003, 2.883361e-002, 1.818126e-002, -8.078428e-002, 7.599119e-002, 1.132010e-001, -4.771928e-002, -1.475722e-016, -2.284216e-003, 2.156252e-002, -4.232096e-002, 5.545828e-003, 1.503651e-002, -9.359086e-004, 2.604515e-002, 3.693884e-002, -2.604515e-002, 9.359086e-004, -1.503651e-002, -5.545828e-003, 4.232096e-002, -2.156252e-002, 2.284216e-003, 1.775851e-002, -6.313605e-003, 6.921974e-002, -6.570828e-002, -3.422500e-002, -8.070243e-002, 3.361392e-002, 1.507632e-001, 4.661889e-002, 5.702246e-002, -6.170216e-002, 2.763309e-002, 7.407623e-002, 5.164380e-003, -5.137603e-002, -3.288972e-002, 4.137187e-002, -5.603835e-002, 5.749901e-002, -4.428690e-002, 1.995235e-003, 1.758472e-002, -3.080946e-002, -3.616401e-002, -2.115020e-002, -3.062431e-002, 1.912909e-002, -2.556453e-002, -9.163725e-002, 9.215785e-002, 2.387539e-002, 1.878994e-001, -5.982231e-002, 4.903296e-003, -3.743481e-002, 4.098999e-002, 2.149000e-002, 5.116917e-004, 6.094626e-002, -7.620763e-002, -6.464237e-002, -3.016311e-002, 6.187050e-002, -3.293194e-003, -1.570324e-003, -9.373752e-003, -1.112554e-001, -1.123748e-001, 4.651710e-002, 1.513481e-001, 1.318084e-001, 1.670850e-001, 6.701623e-002, 1.229739e-002, -1.004644e-001, 4.460171e-002, -1.033530e-002, -6.084969e-003, 6.067473e-002, -6.014932e-002, -5.053096e-002, 6.585687e-002, -3.040803e-002, -1.079680e-002, -1.179840e-001, -1.243316e-001, 4.674516e-003, 1.182438e-001, -7.947273e-002, -1.110869e-001, 2.836399e-002, -5.498406e-002, -1.151702e-001, 5.909846e-003, -7.210139e-002, -6.498003e-002, 1.050561e-001, -2.540004e-002, -1.336381e-001, -6.769144e-002, 1.230446e-001, -1.122437e-001, -8.467335e-002, 3.798037e-002, 1.273423e-001, -1.222699e-001, -2.171072e-003, 3.783482e-002,

© ISO/IEC 2004 — All rights reserved


Copyright International Organization for Standardization
Provided by IHS under license with ISO
No reproduction or networking permitted without license from IHS
Not for Resale

2.395384e-002, -1.121636e-002, -7.178180e-002, -4.265844e-002, 7.888686e-002, -4.177328e-002, -3.995044e-002, -1.866420e-002, 2.393528e-002, -2.166132e-002, 6.778081e-003, 1.209374e-001, -5.512207e-002, -1.694845e-002, -6.910205e-002, -1.071868e-002, 4.517294e-002, -2.309419e-002, -2.324594e-002, 4.677040e-002, -6.676864e-002, 1.308702e-001, -6.179925e-002, -3.301472e-003},
{-1.246184e-003, -5.249015e-003, -4.621485e-003, 5.921577e-004, -2.218615e-002, 5.235770e-002, -4.447257e-002, -9.890505e-003, 7.285774e-002, -9.890505e-003, -4.447257e-002, 5.235770e-002, -2.218615e-002, 5.921577e-004, -4.621485e-003, -5.249015e-003, 1.642136e-002, -2.292671e-002, -5.019887e-003, 2.247568e-003, -4.156800e-002, 3.649640e-002, 7.014637e-002, -4.377808e-003, -5.712439e-002, -6.908200e-002, -6.092255e-002, 9.011123e-002, -2.170310e-002, 3.250867e-002, -5.408754e-002, 2.371820e-002, 6.852374e-003, 3.111462e-002, -5.721307e-002, -3.584353e-002, 7.984485e-002, -1.677092e-001, -1.370053e-001, 5.083039e-002, -1.836199e-002, -6.968260e-003, 2.284540e-003, 5.753400e-002, -7.172718e-002, -1.100572e-002, 1.692778e-004, 3.705510e-002, 2.538820e-002, -6.608526e-003, 3.273323e-002, -1.146240e-001, 1.300716e-001, -8.586490e-003, 5.667755e-002, -5.089958e-002, 1.993767e-002, -9.256875e-003, 1.091755e-001, -6.320708e-002, -6.753263e-002, -7.582765e-002, -1.000820e-001, 5.172659e-002, 3.378496e-002, 7.756270e-003, -4.686122e-002, -1.488369e-001, -7.015743e-002, -1.205432e-001, -1.195139e-001, -1.655606e-002, 2.936296e-003, 8.420224e-004, 3.379215e-002, -7.868989e-002, -1.478116e-001, -2.224795e-002, 3.415207e-002, -2.531654e-002, -1.511876e-002, 2.137395e-001, -5.352036e-002, 1.320867e-001, 1.120220e-001, 5.342832e-003, 2.699561e-002, 4.356462e-002, -6.149618e-002, 9.602027e-002, 4.648789e-002, 1.951532e-003, 6.444769e-002, 1.493925e-002, 1.964186e-001, -2.447533e-002, 5.173448e-002, 1.585973e-001, 1.643903e-003, 4.325413e-002, 4.455412e-002, -3.666409e-002, -7.512733e-003, -8.363703e-002, 5.391918e-002, -7.465816e-004, -4.195552e-002, 9.633289e-002, 3.046925e-003, -7.832686e-002, -2.035272e-002, 7.654751e-002, 2.459654e-002, 1.522822e-002, -3.203224e-003, -2.330241e-002, -8.028179e-003, -5.733322e-002, -1.064193e-001, -1.962247e-002, 4.673689e-003, -2.053954e-002, 9.290106e-003, 1.431342e-002, 2.957127e-002, -1.364019e-002, 5.054351e-002, 1.102559e-003, 4.828966e-017, -1.721659e-002, 2.046876e-003, 2.606855e-004, 1.672971e-002, 1.073244e-002, -1.971482e-002, 1.928878e-002, 1.824413e-002, -1.928878e-002, 1.971482e-002, -1.073244e-002, -1.672971e-002, -2.606855e-004, -2.046876e-003, 1.721659e-002, -1.022659e-002, 2.529946e-002, -2.423398e-002, -7.119949e-002, 3.560873e-002, 7.931066e-002, 1.779062e-002, -2.208619e-002, -7.201567e-002, -3.800817e-002, -7.094685e-002, -2.514424e-002, -6.571457e-002, 8.118126e-002, 5.098174e-003, -4.049497e-002, -1.486820e-002, 3.061568e-002, 7.807256e-002, 2.953677e-002, -1.041085e-001, 5.683777e-002, -5.032883e-002, -7.531851e-003, -2.802966e-002, -3.586125e-003, -1.562547e-002, 6.073547e-002, -2.568474e-002, 8.346133e-002, -1.043777e-001, 2.146541e-002, 1.778403e-002, -1.931284e-002, -6.382483e-002, 1.012678e-001, -5.394545e-002, 2.672091e-002, 1.204360e-001, 5.485941e-002, 2.492270e-002, -4.406868e-002, -3.320372e-002, 2.250880e-002, 7.046264e-002, -1.948826e-001, 1.436600e-001, 6.253330e-002, 1.318413e-001, 3.315443e-002, -1.320085e-001, 1.839449e-001, -1.051698e-003, -6.077585e-002, -6.009366e-003, 4.626898e-002, -7.871764e-002, -3.469704e-002, -2.407728e-002, 1.565593e-001, 6.904605e-004, -1.730711e-002, 9.941142e-002, 9.234558e-002, -8.987155e-002, 3.038876e-002, 9.289107e-002, -8.934841e-002, 2.233242e-002, -8.240357e-004, 2.117812e-002, -3.305593e-002, -8.742359e-003, -1.007114e-001, 9.894918e-002, -6.432168e-002, 2.023485e-002, -4.963276e-002, -9.526601e-002, 4.997680e-002, 2.556147e-002, -1.022630e-001, 1.230835e-002, -7.847491e-002, -1.200688e-002, -1.242465e-001, -8.525686e-002, -3.637901e-002, -2.452000e-002, 7.032210e-002, -9.158379e-002, -1.199512e-002, 3.806886e-002, 1.270832e-002, -6.088488e-002, 2.681076e-002, 2.777589e-002, 5.025048e-003, 1.237163e-002, -5.314290e-002, -2.080546e-002, 5.471220e-003, 1.018211e-002, 6.588477e-002, 1.657978e-002, 1.469197e-002, -5.077317e-003, 1.628527e-002, -2.944896e-002, 6.572136e-002, 8.691128e-002, -8.227268e-002},
{-2.243789e-003, 2.287643e-003, -5.908255e-003, -2.358384e-002, 4.620289e-002, -5.757101e-002, 7.406030e-002, -8.872838e-003, -1.200874e-001, -8.872838e-003, 7.406030e-002, -5.757101e-002, 4.620289e-002, -2.358384e-002, -5.908255e-003, 2.287643e-003, 1.813189e-002, -2.280564e-002, 6.920696e-002, 4.740162e-002, -4.837652e-003, -1.333973e-001, 8.641897e-002, 5.843622e-002, -3.050873e-002, -2.586979e-002, 9.343362e-002, -1.144369e-001, -4.388876e-002, 4.073284e-002, -3.149312e-002, -3.633125e-002, 3.440050e-002, -4.744777e-002, 1.776577e-002, -4.074997e-002, 4.260641e-002, 4.924824e-003, -7.396148e-002, -4.942946e-002, -1.520890e-001, -1.133305e-001, -4.254475e-002, 1.097635e-001, -7.794294e-002, 3.847330e-002, -1.433246e-002, 3.038104e-002, -2.356503e-002, -5.905290e-002, 4.704693e-003, -5.725232e-002, 2.972368e-002, 3.707623e-002, -5.924939e-002, 1.041201e-002, -4.935805e-002, -8.793756e-003, -1.410635e-001, 1.653710e-001, 5.498339e-002, 5.122356e-003, -2.941796e-002, 5.555061e-002, 1.035157e-002, -5.859342e-002, -4.207671e-003, 2.430543e-002, 4.321839e-002, -2.158187e-002, 7.168976e-002, -2.687311e-002, 3.054072e-002, -7.727967e-002, 1.843045e-001, -4.585296e-002, 2.301558e-002, -1.716818e-001, 8.192090e-002, 2.684840e-002, -6.251391e-002, -8.397041e-003, -8.911478e-002, 9.162932e-002, -3.498323e-002, 2.102065e-002, -8.700600e-002, 2.317675e-002, -3.198652e-002, 3.287169e-002, -9.023696e-002, 1.611369e-001, 3.790292e-002, -7.079294e-002, 6.022232e-002, -3.804128e-002, -6.691462e-002, 4.440505e-002, 2.832277e-002, 3.280345e-003, -8.266965e-003, 4.091385e-002, 2.973840e-002, -1.048303e-002, -


© ISO/IEC 2004 — All rights reserved

Copyright International Organization for Standardization
Provided by IHS under license with ISO
No reproduction or networking permitted without license from IHS
Not for Resale

9.569971e-003, -2.035516e-002, 1.826893e-003, 1.784616e-002, 1.095239e-001, -1.189724e-001, 1.231476e-001, 5.343321e-002, -7.828825e-002, 6.117346e-002, 3.235144e-002, -1.160143e-002, 8.958044e-002, -2.081812e-002, 2.648433e-002, 1.101498e-002, 6.978114e-003, 1.190875e-002, 1.501048e-002, 5.890300e-002, -4.384835e-002, -8.889179e-002, 1.320966e-001, 4.688632e-003, -1.688649e-016, -4.399826e-003, -4.998008e-003, -1.232606e-002, 5.844498e-002, -2.488788e-002, -6.302383e-002, -2.049287e-002, -6.778131e-002, 2.049287e-002, 6.302383e-002, 2.488788e-002, -5.844498e-002, 1.232606e-002, 4.998008e-003, 4.399826e-003, -4.163847e-003, 1.423247e-002, 1.131216e-004, 1.789773e-002, 1.182833e-001, -1.613377e-001, 4.799753e-002, 4.414661e-002, 3.303213e-002, 4.313775e-002, 7.234492e-002, -1.403970e-001, 7.422376e-002, 9.425835e-002, 1.813478e-002, -3.590306e-002, -3.596901e-004, -1.060565e-002, -7.025254e-002, -1.060602e-001, 4.937000e-002, -1.404661e-002, 3.492242e-002, 6.373134e-002, 5.573933e-002, 2.235411e-002, 5.150691e-002, -9.502340e-003, -2.495900e-002, 9.536362e-003, 1.068726e-001, -4.767003e-002, 1.723379e-002, -4.895623e-002, -2.363334e-002, 6.979553e-002, 8.693762e-002, -5.569357e-002, 3.766732e-003, 3.706744e-002, -6.247680e-002, 1.292354e-001, 7.055581e-002, -4.120048e-002, -9.622976e-003, -4.431150e-003, 8.737513e-002, -4.098400e-003, -4.753866e-002, 6.834133e-002, -1.003757e-001, 6.465536e-002, -2.704424e-002, -1.073688e-001, -4.990673e-002, -5.988446e-002, 3.836867e-002, -1.263318e-001, 2.010764e-003, 7.369169e-002, -1.909484e-002, -1.664238e-001, 6.691121e-003, -1.200086e-001, 1.451238e-002, 3.136855e-002, -7.156278e-003, 1.290948e-001, -5.259451e-002, -1.130690e-001, 1.403434e-002, 4.797128e-002, -1.252571e-001, -1.815478e-002, -1.408429e-001, -1.605288e-002, 4.759528e-002, -3.932095e-002, -9.593816e-004, 6.632361e-003, 8.707064e-002, 7.577055e-002, 7.915191e-003, -1.019927e-002, 4.455466e-002, 3.111418e-003, -1.846058e-002, 2.879540e-002, 3.146353e-002, -6.462625e-002, 4.945144e-002, -4.307075e-002, -1.298734e-001, 3.999918e-002, -3.641789e-002, 2.649767e-003, -8.745841e-002, 4.581997e-002, 9.988489e-002, 4.290370e-002, -1.154486e-001, -7.726086e-003, -4.630243e-003, -3.338841e-002, 6.505421e-003, 3.167501e-003, -8.723258e-003, -1.341295e-002, -5.599167e-003, 1.040292e-002, -2.710800e-003, -4.063493e-002},
{1.784128e-003, -1.085684e-002, 1.321626e-002, -4.074951e-003, 3.228226e-003, 1.496810e-002, -7.340253e-002, 1.522229e-002, 1.921310e-002, 1.522229e-002, -7.340253e-002, 1.496810e-002, 3.228226e-003, -4.074951e-003, 1.321626e-002, -1.085684e-002, -8.439278e-003, 5.277082e-003, 5.490734e-002, 2.385168e-002, -8.690063e-003, -8.511730e-002, -3.603329e-002, 1.466792e-002, -2.300012e-002, 3.551911e-002, -1.687472e-002, 3.501658e-002, -1.068533e-001, -8.075696e-002, -2.426775e-003, 3.787728e-002, -3.177781e-002, -1.240595e-002, 2.360855e-002, -1.362777e-001, 9.862859e-003, 3.185458e-002, 6.472718e-002, -8.013466e-002, 3.150794e-002, -1.340554e-001, 2.336264e-002, -7.056981e-002, 6.610225e-002, 1.152606e-002, -1.913116e-002, -9.765031e-003, 5.797469e-002, -5.940623e-002, 2.447953e-002, 7.518419e-002, 4.523566e-002, 4.794541e-002, 3.991050e-002, 3.887965e-002, 1.585529e-002, 1.125821e-001, -2.310130e-002, 4.953887e-002, 1.022927e-001, -2.866913e-002, -7.249114e-002, -4.709293e-002, -2.944757e-002, 1.351734e-001, -5.015117e-003, 1.359182e-001, -1.704718e-001, 3.340837e-003, -1.065430e-001, -3.941008e-002, 2.459471e-002, -1.860799e-002, -2.896700e-003, 1.931615e-002, -2.495274e-002, 2.518297e-002, 1.387360e-001, -2.346520e-003, -3.707290e-002, -1.749176e-001, 7.915850e-002, 4.392108e-002, 1.070704e-001, 6.286792e-002, -3.728754e-002, 6.278632e-002, 5.549965e-002, -6.145903e-002, -1.228143e-002, 4.845177e-002, 1.019422e-001, -3.704165e-002, -1.090553e-001, -4.291898e-003, -1.105864e-002, 7.143552e-002, -1.599559e-001, 3.519223e-002, -9.105360e-004, -6.541778e-002, 2.754278e-002, -1.452844e-002, -1.730625e-002, 8.110384e-002, -1.156768e-002, -3.748716e-002, -4.307424e-003, 1.002979e-001, -8.517379e-002, 5.199021e-002, 1.601150e-001, -9.647381e-002, -7.643526e-002, 1.603548e-001, -4.405229e-002, -1.045610e-002, 1.516924e-002, -7.919882e-003, 3.587590e-002, -8.959570e-003, 9.180675e-004, -3.357382e-002, -4.706208e-002, 9.952267e-002, 1.004930e-001, -5.006813e-002, 1.678156e-016, -9.973273e-003, 1.508594e-002, -2.447038e-002, 6.510995e-003, 1.235734e-002, -2.477949e-002, 1.431150e-003, -6.106580e-002, -1.431150e-003, 2.477949e-002, -1.235734e-002, -6.510995e-003, 2.447038e-002, -1.508594e-002, 9.973273e-003, -6.880600e-003, -3.444533e-003, -1.287783e-002, 2.941803e-003, -5.366510e-002, -4.962152e-003, -8.217417e-003, -3.385618e-002, -6.048865e-002, -1.059508e-003, 8.447553e-002, -3.500528e-002, -5.400830e-002, 7.091981e-002, -2.035893e-003, -1.787930e-002, 5.856521e-003, -5.684337e-002, -7.102208e-002, -1.302080e-002, -3.963634e-002, 5.047978e-002, 6.145859e-002, 6.692165e-003, 3.185537e-002, -1.860055e-002, -2.229540e-002, -8.847221e-002, 8.812819e-002, -2.055498e-003, 9.661099e-002, 3.943959e-002, -3.411042e-003, 7.653490e-002, -1.538871e-003, 9.927740e-002, -2.539880e-003, 5.079732e-002, 4.206960e-002, 6.413013e-002, -7.627087e-003, 1.486443e-001, 7.486037e-002, -2.320867e-002, 2.039752e-001, -1.087318e-001, 5.637170e-003, 3.950189e-002, 1.006929e-001, 8.071753e-002, -2.982928e-002, 5.856988e-002, 7.957526e-002, -2.543104e-002, 6.865788e-003, -1.341649e-001, -2.809644e-003, -5.217150e-002, -1.618807e-002, 2.604086e-002, -4.249518e-002, 1.264638e-001, 5.007951e-003, -3.743129e-002, -1.156941e-001, -4.486718e-002, -8.139974e-002, -1.301753e-001, -4.060591e-002, -1.894779e-002, -3.541104e-002, -1.208802e-002, 7.223649e-002, 3.295879e-003, 3.415948e-002, 2.451171e-002, -5.638889e-002, -6.887217e-002, -1.890087e-002, 4.488231e-003, 4.630703e-002, 1.867829e-002, -1.263524e-001, 4.590513e-002, -1.294555e-001, -2.248080e-002, -1.081332e-001, 1.093634e-002, -

© ISO/IEC 2004 — All rights reserved


--`,,```,,,,````-`-`,,`,,`,`,,`---
Copyright International Organization for Standardization
Provided by IHS under license with ISO
No reproduction or networking permitted without license from IHS
Not for Resale

2.336794e-002, -6.462151e-004, 3.116078e-002, -3.159820e-002, -1.005431e-001, 7.395098e-003, 1.893900e-001, 2.058535e-002, 5.898739e-002, -1.157062e-002, -4.919097e-002, -7.544574e-002, 1.063423e-001, -4.614305e-002, 3.282271e-002, -4.953954e-002, -2.645636e-002, 2.409942e-002, -2.139105e-002, 5.234483e-003, 8.119806e-002, -1.766511e-001, 9.002356e-003, 2.238071e-002},
{-6.286850e-004, 2.236856e-004, 3.101323e-003, -1.797076e-002, 1.866242e-002, -2.279149e-002, 5.106563e-002, -3.689889e-002, -4.028132e-002, -3.689889e-002, 5.106563e-002, -2.279149e-002, 1.866242e-002, -1.797076e-002, 3.101323e-003, 2.236856e-004, -1.321089e-003, -1.212598e-002, -9.882434e-003, -8.853651e-003, 4.516362e-002, 3.306647e-002, -1.525824e-001, 1.196287e-002, -4.862486e-002, 3.498322e-002, 3.441956e-002, -1.170442e-001, 5.904276e-002, -3.938784e-002, -1.653397e-002, 2.836032e-002, 3.357318e-003, 5.013448e-002, 2.118626e-002, -5.200814e-002, -3.711674e-002, 8.430027e-002, 1.038212e-001, -1.311744e-001, 1.243684e-001, -2.573779e-002, 1.974936e-002, -1.763267e-001, 1.356771e-001, -1.051701e-002, -2.126499e-002, -2.947803e-002, 7.844765e-003, -2.032399e-002, -4.011265e-002, -9.683798e-002, 2.775452e-002, 2.931745e-003, -3.851522e-002, 3.854877e-002, -5.950785e-002, 9.591799e-002, -6.927562e-002, -3.907697e-002, 1.132921e-002, 6.903528e-002, 2.968185e-003, -9.800153e-002, -3.032838e-002, -4.325211e-002, -8.923843e-003, -1.989864e-003, 5.970000e-002, -4.366561e-002, -1.855281e-002, 5.394591e-003, 4.093898e-002, -3.043953e-002, -7.889714e-002, -7.138240e-002, -1.182627e-002, -8.096002e-002, 6.559726e-002, 5.916402e-002, -7.837343e-002, -1.248378e-001, -8.644004e-002, -9.560328e-002, 7.082654e-002, 9.899876e-002, -5.175710e-002, -4.915268e-002, 8.747598e-002, -2.708670e-002, 3.155633e-002, 3.269562e-002, 1.012863e-002, 1.622245e-002, 3.211336e-002, -6.691533e-002, 4.182965e-002, 7.771703e-002, 1.449196e-001, -1.651026e-001, -2.394764e-002, 8.069631e-002, -4.537443e-002, 4.237398e-002, -2.203912e-002, 9.440134e-003, 1.788097e-002, 8.320468e-002, -1.333675e-001, -3.359137e-002, 7.587219e-002, 7.498548e-002, -6.377894e-004, 7.532625e-002, 1.361529e-002, 3.362426e-002, -4.207755e-002, 6.046023e-002, 5.744813e-002, -4.398104e-002, 8.511737e-003, 2.717937e-002, 4.712060e-003, -2.960134e-002, 7.587368e-002, -3.951122e-002, -2.509653e-002, 6.680537e-002, 1.608252e-016, 3.761397e-004, 2.911573e-002, -5.472312e-002, -2.700759e-002, 1.041816e-001, 1.575052e-002, -9.440993e-002, -5.509471e-002, 9.440993e-002, -1.575052e-002, -1.041816e-001, 2.700759e-002, 5.472312e-002, -2.911573e-002, -3.761397e-004, -8.877613e-003, 1.605650e-002, -2.476746e-002, -7.405179e-002, -1.638282e-002, 3.041306e-003, -3.231133e-002, 1.535070e-002, 8.568169e-002, -4.286128e-002, 1.659492e-001, -7.115223e-002, -7.336263e-002, 1.434669e-002, 4.280860e-002, -2.204094e-002, 4.687694e-003, -5.646241e-002, 8.510473e-002, 9.126637e-002, 2.284614e-002, -8.921736e-002, 5.124459e-002, -6.108592e-002, -1.509487e-001, -3.463343e-003, 3.927299e-002, -2.568823e-002, -8.578450e-003, -6.970782e-002, -6.800317e-002, 7.960798e-003, -1.786143e-002, 1.997910e-002, -8.304333e-002, 8.203685e-003, -6.240643e-002, 3.917816e-002, -7.603032e-002, -5.715792e-002, -6.403525e-002, -3.605030e-002, 2.023555e-002, 1.187071e-001, 2.012096e-002, 4.836692e-002, -8.118439e-003, -1.178782e-002, 6.894972e-002, 1.133898e-001, 5.393493e-002, -4.727154e-002, 9.774116e-002, -3.406831e-002, 1.513554e-002, -6.399023e-002, -5.789722e-002, 3.514466e-002, -2.451437e-002, 3.620195e-002, 4.450443e-002, 1.167181e-001, -5.117984e-002, 8.904476e-002, 7.212333e-003, 7.257852e-002, -3.700191e-003, -8.294648e-002, 5.846772e-003, -8.656532e-002, -6.010538e-002, -8.510152e-003, -6.239830e-002, -9.393970e-002, -8.868101e-003, -1.583647e-001, 3.944202e-002, 1.976392e-002, -4.501309e-003, -1.451237e-001, -1.491477e-002, 7.216701e-002, 3.261788e-002, 5.514378e-002, -1.448649e-001, 1.773744e-002, -3.868187e-002, -4.270288e-002, 1.825095e-002, -7.841517e-002, -1.327425e-001, -8.889471e-004, -9.374458e-002, -2.971422e-002, -4.036362e-002, 1.103696e-001, -9.539145e-002, -1.092495e-001, 2.136932e-002, 6.126869e-002, -1.872145e-002, 1.536305e-002, -3.445634e-002, -1.435120e-002, -1.431217e-002, -6.042650e-003, -3.953871e-002, 4.470606e-002, -8.953605e-002, 1.025191e-001, 4.120410e-002, -1.367148e-001}
};

mean vector $m_1^g$ [70]={
3.151239e+003, -1.089013e+004, 6.479987e+003, 5.373797e+003, 6.551286e+002, 1.676395e+003, -2.648258e+002, -1.090847e+003, -8.652676e+002, -4.156142e+002, -1.296044e+003, -3.027881e+002, -7.569433e+002, 2.725891e+002, -1.535857e+002, -4.469173e+002, 1.839126e+002, 6.059515e+002, 1.808365e+002, -3.066964e+001, -4.458785e+002, 5.757136e+000, 6.025250e+001, -8.575792e+001, -1.641534e+002, -3.756923e+002, 9.144852e+001, -4.475431e+002, -8.397646e+001, -2.931971e+002, -3.027883e+002, -1.249156e+002, -2.073786e+001, 9.020959e+001, -3.497482e+002, -2.328112e+002, -1.098514e+002, -1.326383e+002, -1.308479e+002, 8.113431e+001, 2.827574e+002, -8.568776e+001, -2.260504e+002, 7.050449e+001, -1.404372e+002, 3.508464e+001, 4.367391e+001, -2.434651e+002, 1.011275e+002, -3.279016e+002, 2.614233e+002, 2.290156e+001, 2.159504e+002, 3.125637e+002, 1.881083e+002, -1.253751e+002, 2.376176e+001, -1.435490e+002, -9.532728e+000, 1.671409e+002, -2.079165e+001, 1.290154e+002, -7.643387e+001, -1.158855e+002, 1.933662e+002, -1.116921e+002, -4.448721e+001, -6.604132e+001, 4.506088e+001, -1.918183e+002};


© ISO/IEC 2004 — All rights reserved

--`,,```,,,,````-`-`,,`,,`,`,,`---
Copyright International Organization for Standardization
Provided by IHS under license with ISO
No reproduction or networking permitted without license from IHS
Not for Resale

PCLDA basis matrix $\Psi_2^g$[80][384]={

{8.880815e-003, -7.366031e-003, 1.467635e-003, 6.233067e-003, -2.676537e-003, -5.070131e-003, -4.831772e-003, 7.845230e-003, 6.117151e-003, 7.845230e-003, -4.831772e-003, -5.070131e-003, -2.676537e-003, 6.233067e-003, 1.467635e-003, -7.366031e-003, 9.426224e-005, -1.808060e-002, -1.038047e-002, 8.428718e-003, -9.868937e-004, -1.144317e-002, -2.659528e-003, -1.366484e-002, 2.526951e-003, 9.953220e-003, -1.738047e-002, -2.347952e-003, 8.314250e-003, -1.373097e-003, -1.991637e-002, -1.036354e-002, -1.155715e-002, -6.698652e-003, -2.139745e-002, -1.722337e-002, -1.330030e-002, -1.518586e-003, 4.319363e-003, -6.712689e-003, -2.048502e-004, 1.248464e-002, 8.871045e-003, -1.884395e-002, -6.541510e-003, -1.883218e-002, -2.015974e-002, -1.356056e-002, 3.027693e-002, -2.047396e-003, 3.922207e-003, 1.932704e-002, 7.012859e-003, -1.508588e-002, -3.174157e-002, -2.920625e-002, -1.661077e-002, -1.567835e-002, 1.574014e-002, -7.657511e-003, 2.407223e-002, 1.392713e-002, -2.557129e-002, -5.092954e-004, 3.940455e-003, 4.815062e-003, -1.506977e-003, -2.137622e-002, -2.425693e-002, 2.735363e-003, 1.600124e-002, -2.512456e-002, -1.491661e-002, -7.038513e-003, 3.083076e-002, 1.300395e-002, -1.256921e-002, 1.640400e-003, -2.749233e-003, -1.350846e-002, 8.612606e-003, 1.593232e-002, -2.727125e-003, -2.878721e-003, -1.479019e-002, 1.605428e-003, 1.929722e-002, -5.029001e-005, 1.301846e-002, -6.190773e-003, 3.103430e-003, -8.589829e-003, 9.660568e-003, -3.077290e-004, 1.696579e-002, -1.044499e-003, 1.114703e-002, 6.661985e-003, 7.809986e-003, 4.744142e-004, -2.928814e-002, -2.566414e-002, -1.299493e-002, -1.507528e-002, -3.266909e-002, 8.567672e-003, 7.850977e-003, 2.627466e-002, 3.183961e-003, -2.717371e-003, -8.759899e-003, -9.432546e-003, 1.316976e-002, 8.041262e-005, 1.558510e-003, -6.910097e-003, 2.851727e-002, -2.393172e-004, 2.138060e-002, 5.698818e-002, 3.070386e-002, 2.853758e-002, 2.211624e-002, 5.742775e-003, -1.251451e-002, 3.126120e-003, -2.110748e-003, -3.237265e-003, -2.897740e-002, 6.426109e-003, 1.470120e-002, 1.226772e-002, -2.547110e-002, 1.226772e-002, 1.470120e-002, 6.426109e-003, -4.452274e-003, 3.938701e-002, 7.613244e-003, -4.690860e-002, -2.945551e-002, 5.971368e-002, -3.191766e-002, 7.745077e-002, 6.985598e-003, -1.868913e-002, 2.167351e-002, -1.705886e-002, -1.179628e-002, -3.811649e-002, 4.176152e-002, 1.779894e-002, -3.541985e-002, -3.455663e-002, 3.937575e-002, -8.471647e-002, 6.842391e-002, 2.511358e-002, 5.663850e-002, 2.630220e-002, 6.930789e-004, 4.388377e-003, 1.276913e-002, 1.647512e-003, -3.489380e-002, 1.647512e-003, 1.276913e-002, 4.388377e-003, 9.788920e-003, 1.473555e-002, -4.912929e-002, 3.768094e-002, -3.301739e-002, -3.777880e-002, -1.847589e-002, 4.660012e-002, -1.732081e-002, 7.864259e-002, 1.535380e-002, 1.006802e-001, 1.832846e-002, -3.167468e-004, 3.936173e-002, -8.779675e-003, 5.707173e-003, 4.875282e-002, 7.584043e-002, -2.493961e-002, -3.836789e-002, 1.023342e-002, 3.057125e-003, 1.496936e-002, 2.205647e-002, -1.128111e-002, -2.427211e-002, -2.819178e-003, 4.894662e-002, -2.819178e-003, -2.427211e-002, -1.128111e-002, 3.108225e-002, -6.101760e-002, -1.401449e-002, 2.153533e-002, -4.000914e-002, 6.679307e-002, -1.654003e-002, 6.249153e-003, -1.036061e-003, -7.999290e-003, 7.430765e-003, 3.164752e-002, -4.433405e-002, 1.372237e-002, 3.501165e-002, 3.857064e-002, -2.050532e-002, -3.730090e-002, -1.593985e-002, -2.109796e-002, -1.611689e-002, -5.703588e-002, -1.295665e-002, 3.299828e-003, 1.510867e-002, -1.480326e-002, 1.574256e-002, -2.018691e-002, 2.792601e-002, -2.018691e-002, 1.574256e-002, -1.480326e-002, -1.202045e-002, -2.059994e-003, 1.229304e-002, 4.910834e-003, -2.801491e-002, 5.849374e-002, 1.683758e-002, -7.632231e-002, 1.295657e-002, 1.359796e-002, 1.892247e-002, -4.956968e-003, 2.395997e-002, -4.174868e-002, 3.181546e-002, -2.889748e-002, -3.990012e-002, 3.270741e-002, -4.538436e-005, 9.002090e-002, 7.423845e-002, 2.450031e-002, -4.981874e-002, -5.575418e-002, -3.540773e-002, -2.214614e-002, 4.912565e-002, -2.214614e-002, -1.684342e-002, -1.223361e-001, 7.841204e-002, 1.390170e-001, -9.084709e-002, 4.666355e-002, 1.343070e-001, 4.666355e-002, -1.057045e-001, 1.031300e-002, -7.890258e-003, 7.444394e-002, -4.465959e-002, 1.251295e-003, 2.571966e-001, 1.251295e-003, -4.854436e-002, 9.913770e-002, -2.303532e-002, -1.494300e-001, -6.004785e-002, -1.196271e-002, 9.154884e-002, -1.196271e-002, -6.118803e-003, -1.411898e-002, -5.113759e-002, -1.589313e-001, 3.591310e-002, -3.667787e-002, -2.756612e-002, -3.667787e-002, 1.569553e-002, 2.640676e-002, 1.503836e-001, -2.711989e-002, 6.136432e-002, -1.143629e-002, 7.007701e-003, -1.143629e-002, -8.534759e-002, 9.308743e-002, -1.606676e-002, -3.629356e-002, 7.199196e-002, -4.307951e-002, 7.907607e-002, -4.307951e-002, -7.659231e-002, -9.724390e-003, -1.737096e-002, 2.013010e-002, 3.340856e-002, -1.456371e-002, -3.096068e-002, -1.456371e-002, 1.702084e-002, 4.753768e-002, -8.791999e-003, 4.245912e-002, -6.956376e-002, 9.225997e-002, -8.501060e-002, 9.225997e-002, 6.477178e-002, -1.311943e-002, -1.367524e-001, 1.266497e-001, 5.530694e-002, 3.961269e-002, 2.406197e-002, 3.961269e-002, -9.813494e-002, 7.615813e-002, 3.779531e-002, -2.134543e-001, 7.725341e-002, 5.406960e-003, 7.741506e-002, 5.406960e-003, -1.279572e-001, -3.070352e-001, 1.614394e-001, -5.365507e-002, -7.778662e-002, 4.866887e-002, 2.369036e-002, 4.866887e-002, 8.641347e-002, 1.533804e-001, -2.056056e-002, 9.166093e-003, -2.489218e-002, 5.018002e-002, -5.464235e-002, 5.018002e-002, 3.440883e-003, -3.849750e-002, 4.860501e-002, -6.009895e-002, 6.120546e-002, 4.674712e-002, -2.136572e-001, 4.674712e-002, -1.522324e-003, 3.888276e-002, 6.865718e-002, -5.327619e-002,

© ISO/IEC 2004 — All rights reserved



--`,,```,,,,````-`-`,,`,,`,`,,`---

Copyright International Organization for Standardization
Provided by IHS under license with ISO
No reproduction or networking permitted without license from IHS

Not for Resale

5.209242e-002, -1.998465e-002, -9.896072e-002, -1.998465e-002, -5.976283e-002, -2.151299e-002, 1.489661e-001, 7.659350e-002, -3.645054e-002, 9.052481e-003, 1.306134e-002, 9.052481e-003, 2.337836e-003, 7.736182e-002, -1.921289e-001, -6.195874e-002},
{1.500132e-002, -1.834387e-003, -8.961525e-005, -1.328537e-003, 3.388055e-003, -4.560253e-003, -1.283018e-002, 2.693787e-003, 1.660380e-002, 2.693787e-003, -1.283018e-002, -4.560253e-003, 3.388055e-003, -1.328537e-003, -8.961525e-005, -1.834387e-003, -1.124711e-002, 6.518964e-003, -8.720205e-003, -1.369419e-002, 1.005808e-002, 1.420826e-002, -1.808384e-003, -1.087753e-002, 5.916850e-003, -2.577086e-003, -8.252850e-003, 1.513701e-002, 1.663462e-002, -1.666838e-002, -2.327683e-002, 1.587247e-002, 3.643135e-003, -1.300991e-002, 2.777071e-003, -2.020151e-002, 2.382727e-003, -1.670918e-002, -3.431881e-003, 1.105026e-002, 1.980454e-003, -1.349575e-002, 4.598130e-003, 9.159274e-003, 2.508762e-003, -2.816181e-003, 1.247692e-003, -1.802958e-002, -1.198784e-002, -2.291785e-003, 2.969704e-003, 1.559771e-002, 1.867202e-002, 7.872751e-005, -1.363415e-002, -2.521298e-003, -4.455409e-003, 1.009799e-002, 2.540260e-002, -1.329037e-002, 1.706858e-002, -6.849755e-003, 6.651395e-004, -3.923271e-004, -4.791499e-003, -1.039200e-002, -1.016372e-002, 2.490495e-002, 1.610078e-003, 9.452407e-003, 3.457852e-002, 2.052888e-002, -1.659326e-002, 5.793251e-002, 3.331067e-002, 2.205519e-002, 2.843906e-002, -5.762240e-003, -3.301969e-002, -5.700481e-003, 8.173036e-003, -1.336553e-002, 2.863038e-003, 1.465860e-002, -1.654894e-002, 3.199487e-002, -8.908960e-004, -8.211270e-003, 2.221451e-002, 3.416081e-002, -1.567682e-002, 1.682574e-002, 1.502082e-002, 9.883789e-003, -5.690112e-003, 4.722778e-003, -1.646929e-002, -2.424897e-003, 1.834658e-002, -1.298352e-002, 3.005724e-002, -4.096308e-002, 2.268429e-002, 2.687597e-002, -8.622047e-003, -2.758552e-002, 3.104339e-003, -1.866566e-002, 4.524216e-003, -2.025615e-002, -2.082436e-002, -7.694199e-003, -1.766698e-003, -1.825095e-002, 1.601834e-003, 1.240033e-002, 1.347721e-002, -1.540261e-002, 4.572188e-002, -3.124376e-003, 1.187005e-002, 8.428910e-003, 1.143573e-002, -2.998366e-002, -6.886675e-003, 3.714374e-002, 7.221095e-004, 4.368829e-003, 8.289378e-003, 1.068386e-002, -4.028779e-003, 2.677134e-002, 1.327190e-002, 2.677134e-002, -4.028779e-003, 1.068386e-002, 4.658224e-003, 2.313939e-004, -1.632728e-003, -6.191630e-002, 2.594439e-002, -2.786872e-002, -4.549681e-002, 2.323237e-002, -8.644788e-003, 1.104044e-002, 4.209959e-003, 1.266944e-003, 1.109761e-002, 4.288329e-002, 3.398427e-002, 3.260749e-002, -7.063995e-002, 1.433071e-002, 5.087001e-003, 4.053090e-003, -1.352022e-002, -3.959820e-002, 3.949893e-002, -7.296395e-002, 3.341118e-002, 1.032776e-002, -4.991582e-003, 7.756375e-003, 1.093365e-002, 7.756375e-003, -4.991582e-003, 1.032776e-002, 1.434658e-002, -7.246963e-003, -2.626834e-002, -4.677258e-003, -6.809595e-002, -2.364965e-002, 2.625405e-002, 1.044995e-002, 1.707227e-002, 1.708044e-002, 5.080134e-003, 8.051085e-002, -1.031583e-001, 6.093175e-003, 2.010360e-002, 1.504313e-002, -1.048990e-002, -3.772539e-002, 6.282173e-002, 2.316288e-003, -2.581891e-002, 9.451641e-002, 5.279232e-002, 4.499725e-002, -8.676764e-003, 6.268060e-003, -5.511430e-003, 2.063424e-002, 2.693964e-002, 2.063424e-002, -5.511430e-003, 6.268060e-003, 5.029627e-002, -2.941301e-002, 3.551219e-002, 5.218426e-002, 2.759955e-002, -3.329426e-002, 5.534610e-003, 5.631039e-003, 3.361577e-002, -2.575873e-002, 1.282910e-002, 1.889914e-002, 1.508442e-002, 2.454215e-003, -5.770508e-002, -2.333978e-002, 2.756591e-002, -2.194578e-002, 6.269751e-002, 1.012209e-001, 8.688801e-002, 6.154866e-002, -4.070992e-002, 1.325771e-002, -1.802248e-002, 7.518097e-003, 2.302236e-003, 1.138781e-003, 7.425266e-003, 1.138781e-003, 2.302236e-003, 7.518097e-003, -2.611354e-002, 8.122809e-003, 2.900955e-002, -3.370994e-002, 2.583718e-002, 6.605160e-002, -3.301520e-002, -1.192796e-003, 4.964794e-002, -3.534529e-002, 5.196031e-002, -1.693739e-002, -1.281438e-002, 3.634119e-002, -6.033199e-002, -3.056162e-002, 1.418735e-002, -1.124184e-002, 2.575258e-002, -8.551099e-002, 4.449467e-002, 4.689594e-002, 5.284329e-002, -9.063025e-002, 2.934736e-002, -4.407440e-002, -3.565895e-002, -4.407440e-002, 9.475946e-002, -6.922616e-002, -8.972168e-002, -1.421808e-001, 4.536810e-002, -3.866170e-003, -1.136269e-001, -3.866170e-003, 1.037268e-001, -2.920511e-001, -1.735341e-002, 7.865352e-002, 2.870496e-002, 5.200842e-003, -5.202320e-002, 5.200842e-003, 3.490326e-002, 1.432639e-001, -3.330883e-003, -9.682127e-002, 4.897984e-002, -2.560245e-002, -1.740976e-002, -2.560245e-002, -2.483527e-003, -1.470992e-001, -7.188874e-002, 4.943123e-002, -1.054051e-002, -1.708849e-002, -1.935804e-002, -1.708849e-002, -1.188418e-002, 4.811340e-002, -1.011540e-002, 9.613134e-002, -5.588557e-002, 9.408155e-003, -4.900986e-003, 9.408155e-003, 5.613775e-002, 9.189971e-002, -7.963878e-002, -6.887769e-002, -1.975063e-002, -2.091973e-002, -8.073539e-002, -2.091973e-002, -5.449310e-002, -1.567800e-001, 1.245977e-001, -6.013091e-002, -2.452299e-002, -2.204781e-002, -2.682071e-002, -2.204781e-002, -7.030800e-002, 9.158376e-003, 7.806848e-002, -4.695308e-002, -6.698121e-002, 3.299656e-002, -4.900375e-002, 3.299656e-002, -1.083802e-001, 1.347900e-001, -8.283376e-002, 2.625367e-002, -4.178626e-002, -3.388563e-004, 9.743585e-002, -3.388563e-004, -2.853725e-002, 7.433053e-002, 2.957113e-001, 1.408574e-001, 4.295695e-003, 2.027614e-002, 1.954366e-002, 2.027614e-002, -6.618470e-002, -5.856047e-002, 1.601548e-001, 1.709450e-001, -8.015911e-002, 2.152169e-002, -3.219537e-003, 2.152169e-002, -1.087646e-001, -5.015406e-002, 6.365623e-002, 2.309086e-001, 1.975179e-002, 1.035133e-002, -1.168736e-002, 1.035133e-002, -5.778341e-002, 7.884498e-002, -7.466585e-002, -5.686180e-002, 8.033891e-002, -2.874371e-002, -1.221587e-001, -2.874371e-002, -4.811765e-002, -5.351976e-002, -1.023259e-001, 8.818732e-002,


© ISO/IEC 2004 — All rights reserved

Copyright International Organization for Standardization
Provided by IHS under license with ISO
No reproduction or networking permitted without license from IHS
Not for Resale

4.304929e-002, -8.381088e-003, -1.601255e-002, -8.381088e-003, -5.604923e-002, -1.358683e-002, 5.150352e-002, 1.151223e-001, 1.479165e-002, 1.987840e-002, -1.708101e-002, 1.987840e-002, 8.159862e-002, -8.620679e-002, 1.820140e-001, 8.291328e-002}, {-5.335737e-003, -8.225996e-004, -3.021409e-003, -6.617356e-004, 5.923088e-003, 3.326446e-003, -5.524230e-004, -1.920368e-003, -2.085671e-002, -1.920368e-003, -5.524230e-004, 3.326446e-003, 5.923088e-003, -6.617356e-004, -3.021409e-003, -8.225996e-004, 1.162712e-002, -7.583013e-003, 5.399379e-003, -2.088390e-002, -1.116304e-002, 7.814404e-003, 6.667294e-003, 1.016656e-002, -1.826563e-003, 1.000054e-002, 4.480519e-005, 8.190950e-003, -4.223701e-003, -1.694146e-002, 7.653675e-003, -2.024899e-003, -1.155986e-002, 1.009126e-002, 1.971685e-002, 2.336392e-003, -1.103215e-002, 1.520890e-002, 2.463503e-002, 2.436860e-003, 9.410409e-003, 4.581543e-003, -1.427418e-003, 5.573410e-003, -3.503557e-003, 2.723133e-002, 1.517800e-002, 1.580476e-002, -1.054612e-002, 2.335265e-003, 1.341640e-002, 1.603294e-002, 8.417671e-003, 2.020363e-002, 1.095782e-002, 3.429800e-002, 6.089668e-003, 3.475620e-002, -1.721909e-003, 1.246237e-002, -5.249859e-003, 5.488111e-003, 1.505467e-002, 1.794312e-002, -1.112324e-002, 6.982910e-003, 6.373737e-004, -3.308858e-003, -1.462197e-002, 3.318505e-004, -1.615159e-002, -4.832388e-003, -3.752851e-002, -1.228082e-002, 1.316793e-002, -1.739236e-002, -2.420034e-002, 9.910076e-003, 2.536326e-003, -1.033324e-002, 9.203517e-003, 7.677582e-003, -1.336942e-002, 2.388073e-003, -4.352745e-002, -8.345221e-003, -3.633805e-002, 5.837188e-003, -2.300316e-002, -3.412179e-002, -4.234630e-002, -8.182948e-003, -4.109261e-002, 3.337125e-002, 1.921252e-003, -2.542638e-003, -1.180900e-002, 9.809705e-003, -2.350310e-002, -1.156022e-002, 9.604750e-004, 2.356228e-002, 3.770640e-003, -3.936749e-002, -9.608136e-003, -2.485340e-002, -1.862591e-002, -2.346881e-002, 6.460873e-003, 1.329993e-002, -1.787246e-002, 5.246515e-003, 1.330719e-002, -1.732913e-002, -3.829957e-003, -4.722824e-003, -3.248301e-002, 3.136512e-002, 1.279014e-002, -4.208087e-002, 2.538232e-003, -1.834879e-002, -4.889820e-003, 3.813387e-002, 2.950688e-002, 2.513829e-002, 1.329015e-003, -1.150567e-002, -3.280213e-002, 1.352280e-002, -3.851057e-002, 6.117245e-003, -1.586665e-002, 6.117245e-003, -3.851057e-002, 1.352280e-002, 5.640681e-002, -3.083211e-002, -3.205105e-002, -6.744175e-003, -1.103311e-001, 1.717954e-002, 7.315329e-002, 9.908519e-002, 3.596028e-002, 1.276582e-002, 5.084825e-002, -3.286186e-002, -9.320217e-002, 2.358085e-002, -2.161230e-003, 5.560450e-002, 3.852191e-002, 1.838064e-002, 9.920448e-002, 3.108286e-002, -1.008714e-001, 5.441033e-002, 2.194913e-002, 6.293648e-002, -2.868483e-002, 1.253183e-002, -3.226299e-002, 7.648364e-003, 4.740963e-002, 7.648364e-003, -3.226299e-002, 1.253183e-002, 4.956643e-002, 5.434753e-002, 6.233416e-002, 1.122462e-002, 6.340391e-003, -3.041894e-002, -2.194201e-002, -5.034573e-002, 2.308081e-002, 3.369314e-002, 8.386360e-002, 2.747358e-002, 5.467054e-002, -1.185939e-002, 8.251346e-002, 9.569304e-003, 3.258127e-002, 1.272566e-001, -1.906735e-002, 4.543525e-002, 9.325396e-002, 7.340246e-002, 9.059857e-002, 2.919834e-002, 2.940934e-002, -3.210170e-003, 6.893105e-003, 2.917614e-003, 1.913252e-002, 2.917614e-003, 6.893105e-003, -3.210170e-003, 1.049234e-002, -1.690227e-003, -2.735009e-002, -1.838571e-002, -2.509146e-002, 6.272509e-002, -2.048630e-002, -1.491409e-002, 4.323154e-003, -2.300114e-002, 3.853889e-002, -4.370266e-002, -2.100212e-002, 2.127050e-002, 3.931865e-002, 1.607138e-002, -2.262525e-002, 1.141634e-002, 4.814144e-002, -1.474868e-002, -6.272718e-002, 3.976225e-002, 6.926687e-002, -3.164226e-002, 2.674187e-002, 6.972966e-003, -1.372471e-002, 1.083866e-002, 5.110646e-002, 1.083866e-002, -1.372471e-002, 6.972966e-003, -9.397096e-004, -1.484636e-002, 2.811444e-002, 2.025749e-002, 4.578900e-002, 3.459526e-002, -3.098438e-002, -1.779357e-003, -3.442566e-002, 2.076239e-003, 3.734860e-002, -5.159068e-004, 3.961774e-002, -1.652111e-002, -5.192978e-003, -1.111699e-002, -1.979989e-002, 4.274829e-002, 1.936278e-002, -5.783637e-002, 1.667704e-002, -6.348253e-002, 1.626175e-002, 2.120430e-002, 2.417718e-002, 5.394796e-002, -2.267704e-002, 5.394796e-002, -5.494430e-002, 2.884615e-002, 1.520803e-001, 3.814725e-002, 3.647355e-002, 7.084454e-002, 1.002816e-001, 7.084454e-002, 2.944284e-002, 2.686438e-001, 4.820781e-002, 1.521218e-001, 3.952934e-002, 5.020191e-002, -5.528181e-002, 5.020191e-002, 5.899976e-004, 2.058585e-001, 1.177458e-002, 5.970991e-002, 8.704243e-004, 2.654265e-002, -2.694850e-002, 2.654265e-002, 7.161400e-002, 9.106744e-002, -5.531231e-003, 5.778208e-002, -5.529317e-002, 3.024288e-002, 3.129595e-002, 3.024288e-002, -2.502325e-002, -3.562698e-002, 5.035454e-003, 4.360197e-002, -3.815968e-002, 1.194556e-003, 1.023853e-001, 1.194556e-003, -6.443821e-002, 1.697004e-002, -3.237763e-003, 4.128823e-002, -2.994202e-002, 3.718242e-002, -8.751664e-002, 3.718242e-002, 3.854434e-002, 1.223126e-001, -5.282389e-002, -5.701709e-002, -3.914257e-002, 3.237275e-002, -6.672996e-002, 3.237275e-002, 5.564235e-002, 1.347894e-001, -9.550815e-002, -3.060587e-002, 4.090584e-003, -1.798946e-002, -4.764000e-002, -1.798946e-002, 3.198227e-002, 9.369700e-002, 5.068438e-002, -1.659416e-002, 5.588440e-002, 7.262359e-002, -1.245477e-001, 7.262359e-002, 1.552067e-002, 3.668767e-003, 1.076280e-001, 6.587189e-002, 3.786963e-003, 5.265855e-002, -1.959322e-001, 5.265855e-002, -4.682689e-002, 1.561033e-001, 1.506532e-001, 1.717211e-001, 4.012995e-002, 6.455015e-004, -7.288961e-002, 6.455015e-004, -7.787446e-002, 1.089045e-002, 1.049868e-002, 3.523248e-002, 1.602033e-003, 4.459787e-005, -2.147034e-002, 4.459787e-005, -6.521151e-003, 1.160505e-001, -6.434199e-002, 4.144802e-003, -3.216768e-002, 5.176930e-002, 7.636078e-002, 5.176930e-002, 2.641283e-002, 4.524620e-002, -1.421593e-001, 2.098453e-001,

© ISO/IEC 2004 — All rights reserved


Copyright International Organization for Standardization
Provided by IHS under license with ISO
No reproduction or networking permitted without license from IHS
Not for Resale

1.474747e-002, 3.230262e-002, -2.260476e-001, 3.230262e-002, 6.275077e-002, 2.111838e-001, -9.336148e-002, -4.624699e-002, -3.192252e-002, -5.318604e-003, -4.610343e-002, -5.318604e-003, -1.317536e-004, 5.059260e-003, -7.093198e-003, 2.700030e-002},
{3.794434e-004, -2.701373e-004, 4.948623e-003, -2.615366e-003, 2.568164e-004, -9.945890e-003, -8.065708e-004, 2.388171e-003, 1.540986e-002, 2.388171e-003, -8.065708e-004, -9.945890e-003, 2.568164e-004, -2.615366e-003, 4.948623e-003, -2.701373e-004, 1.282113e-002, -1.028611e-002, -3.323784e-004, -4.895336e-004, 1.338671e-002, -1.031736e-002, -1.197486e-002, 9.738137e-003, -2.572724e-002, 1.134468e-002, 5.557513e-003, -1.269808e-003, -2.647162e-003, -7.387459e-003, -1.557814e-002, -1.006865e-002, -2.069668e-002, -3.339570e-004, 3.085907e-003, 6.890787e-003, 1.821061e-002, -7.652194e-004, 1.257630e-002, -1.909425e-002, -4.808954e-003, 3.242896e-003, 4.544074e-003, -4.969844e-003, -8.752995e-003, -5.191278e-003, 1.577101e-002, 7.800952e-003, 2.657862e-002, 1.908721e-002, -1.241038e-002, 9.467365e-003, 1.552674e-002, -1.476245e-003, 5.084471e-003, 2.362070e-003, 2.898606e-002, 1.679051e-002, -7.222850e-003, 4.075572e-003, -1.291369e-003, 2.812989e-003, 1.914304e-002, 8.111456e-003, 9.865821e-003, -6.796660e-003, -8.504410e-003, 2.260961e-002, 4.588264e-003, 8.126574e-003, 2.196077e-002, 2.483881e-002, 4.120996e-002, 2.715629e-003, -2.052876e-002, 7.139969e-004, 9.597899e-003, 1.289514e-003, 7.427813e-003, -1.570036e-002, 1.104475e-002, -5.136355e-003, 2.263571e-002, 2.952662e-003, -4.040611e-003, 1.918593e-002, -3.492880e-002, -1.120613e-002, 8.613463e-002, 8.812290e-003, -7.575508e-003, -3.027318e-004, 5.846181e-003, -1.644773e-002, 1.222392e-002, -7.134479e-003, -3.496536e-002, -2.556975e-003, -3.342468e-003, -1.783033e-002, -4.042487e-003, -3.504965e-003, -2.040927e-002, 2.289669e-003, 1.671874e-002, 3.688839e-003, 4.137786e-002, -3.455883e-002, 2.448408e-003, 8.163963e-003, 1.223283e-002, 4.948353e-003, -3.294152e-003, -8.605036e-004, -4.571488e-003, -1.062920e-003, -1.720207e-003, 1.702410e-002, 1.811704e-002, 2.645884e-002, 5.136039e-002, 1.929055e-002, 4.557104e-002, 3.471760e-002, 1.350541e-002, 4.708763e-002, -4.860677e-003, -5.303827e-003, -8.895897e-003, -1.718648e-002, 1.786680e-004, 1.905900e-003, 3.868686e-002, 1.905900e-003, 1.786680e-004, -1.718648e-002, 8.123310e-002, 4.542063e-002, -2.171652e-002, 4.096138e-002, 8.515296e-003, 1.819383e-003, 1.326594e-002, 2.647816e-002, 5.623526e-002, 3.253286e-002, -4.714312e-002, -4.817127e-003, 6.038928e-002, -2.152633e-002, 7.804889e-002, 6.229239e-002, 1.995234e-002, -2.135847e-002, -4.759287e-003, 6.939335e-002, -7.401615e-003, 3.742399e-002, 3.394116e-002, -2.259671e-002, -4.778647e-003, -7.865581e-003, -1.881101e-002, 8.559084e-003, 6.615890e-003, 8.559084e-003, -1.881101e-002, -7.865581e-003, 1.151513e-001, 2.014473e-003, -1.969484e-002, 2.713129e-003, 9.966401e-003, 7.047568e-002, 1.415438e-002, 2.581786e-002, 3.873805e-002, 1.777742e-002, 1.096291e-002, 7.873593e-003, -1.289533e-003, 2.083327e-002, 5.774825e-002, 5.619628e-002, 4.362854e-002, -1.083447e-002, 2.998812e-002, 7.526686e-002, 2.071047e-002, -1.220895e-002, 7.009107e-002, -3.389383e-002, 1.116047e-002, 1.644157e-002, 1.270263e-002, 1.584966e-002, 4.200680e-002, 1.584966e-002, 1.270263e-002, 1.644157e-002, -4.560711e-003, -1.517151e-002, -1.260602e-002, 6.748746e-002, -1.741330e-002, -3.345879e-002, 1.172292e-002, -5.736164e-002, -1.564421e-002, 6.954578e-002, -2.884505e-002, 2.357722e-002, 2.254180e-002, 2.957661e-002, 1.634513e-002, 7.037789e-002, -2.293321e-003, 2.162738e-002, 2.393507e-002, 5.474812e-002, -6.916181e-003, -4.407507e-002, 7.492827e-002, 6.158028e-002, 2.893516e-003, 1.331084e-002, 2.904283e-002, -8.997584e-003, 6.528976e-002, -8.997584e-003, 2.904283e-002, 1.331084e-002, -1.206918e-002, -4.078689e-002, -3.632184e-003, 6.929685e-003, 2.354317e-002, -2.907719e-002, 5.919565e-003, 1.347750e-002, 1.226457e-002, 9.767250e-002, 6.213214e-003, 8.805213e-002, -4.133302e-002, 1.017370e-001, 1.393842e-002, 4.861739e-002, 1.859377e-002, 3.017914e-002, 6.886047e-002, 2.105771e-003, 4.593485e-002, 4.750335e-002, 2.616236e-002, -1.934650e-002, 7.248118e-002, -1.586067e-002, -2.125030e-002, -1.586067e-002, -7.816524e-002, 4.457699e-004, -4.653746e-002, -5.749518e-002, -7.668223e-002, -4.042840e-003, 1.581518e-001, -4.042840e-003, -4.997274e-002, 1.794075e-002, 1.913463e-002, -1.279844e-001, -5.367401e-002, -9.800228e-003, 7.535124e-002, -9.800228e-003, -8.477311e-003, -2.987924e-001, -2.184942e-002, 4.727947e-002, 3.850161e-002, 1.888249e-002, -1.107366e-001, 1.888249e-002, -1.771591e-001, -5.261244e-002, -7.510726e-002, -5.338674e-002, -2.477456e-002, 1.835248e-002, 1.794705e-002, 1.835248e-002, -5.929549e-002, -5.086625e-003, -2.347541e-002, -1.345661e-001, 2.007971e-002, -6.622021e-002, -1.730024e-001, -6.622021e-002, 3.373725e-002, -5.178759e-002, 9.213519e-003, -1.052296e-001, -4.874065e-003, -3.750074e-002, -1.160283e-001, -3.750074e-002, -5.888755e-002, 2.794150e-002, 5.183525e-002, -1.058235e-001, 1.526783e-002, 3.552883e-002, 5.537834e-003, 3.552883e-002, -1.388393e-001, -1.248678e-001, -4.837558e-002, -1.185248e-001, 1.783561e-002, -4.390732e-002, -6.871094e-002, -4.390732e-002, -1.105546e-001, -3.107801e-002, 8.104292e-002, -4.417265e-002, -6.648219e-002, -6.358939e-002, 5.706740e-002, -6.358939e-002, 4.185063e-002, 1.100195e-001, 3.541193e-002, 2.152075e-001, -4.185347e-002, -2.149605e-002, -5.016623e-002, -2.149605e-002, 5.154474e-002, -2.270484e-002, -5.461533e-002, 9.951086e-002, -1.126856e-003, -3.746288e-002, -1.131289e-001, -3.746288e-002, -1.033690e-001, -4.409090e-002, 1.401141e-002, -5.207342e-002, -5.388667e-002, -1.420708e-002, -2.759359e-002, -1.420708e-002, 1.309460e-002, 2.489262e-002, 2.121029e-002, -1.023585e-001, 1.136937e-001, -7.766339e-002, -1.704513e-001, -7.766339e-002, -7.795832e-002, 2.086765e-002, -8.252226e-002, 6.454152e-003,


© ISO/IEC 2004 — All rights reserved

Copyright International Organization for Standardization
Provided by IHS under license with ISO
No reproduction or networking permitted without license from IHS
Not for Resale

7.573325e-002, -6.301916e-002, -4.725137e-002, -6.301916e-002, -1.052430e-001, -2.267503e-001, -1.749073e-001, -8.223902e-002, -2.985940e-002, -3.508320e-002, -4.211753e-002, -3.508320e-002, -4.240708e-002, -1.113077e-001, 8.282028e-002, -3.050424e-002},
{-5.553796e-003, -1.105214e-003, 8.678255e-004, -1.517141e-003, 2.779069e-003, -1.028636e-003, -1.026222e-002, 1.930708e-003, 2.058479e-002, 1.930708e-003, -1.026222e-002, -1.028636e-003, 2.779069e-003, -1.517141e-003, 8.678255e-004, -1.105214e-003, -6.600194e-003, -3.502486e-003, -1.099009e-002, 1.143333e-003, 1.538620e-002, -3.323636e-004, -1.432614e-002, 5.281270e-003, -2.681206e-002, 3.457517e-002, -1.375433e-002, 7.011926e-003, -1.037884e-002, 1.695495e-003, -7.678321e-003, -1.559993e-003, -2.315128e-002, -2.580555e-002, -1.553750e-002, -3.524626e-002, -5.735572e-003, -1.121488e-003, 7.438338e-003, -1.569171e-002, -3.958715e-002, 2.777172e-002, -1.667411e-003, 7.749945e-003, -2.075208e-002, -2.593947e-002, 3.526167e-004, -3.978748e-002, -3.785114e-002, 2.011178e-003, -1.161473e-002, -1.296564e-002, 1.247637e-002, -5.289017e-003, -1.711370e-002, 5.302287e-003, -1.542662e-003, 6.897798e-003, -1.884211e-002, 7.532221e-003, -1.039792e-002, 1.086443e-002, -1.946249e-002, 1.311227e-002, -8.035743e-003, -1.020627e-002, -1.273641e-002, 3.105990e-003, -3.404685e-002, 2.499619e-002, -1.434732e-002, 5.853162e-003, 2.900326e-002, -8.233390e-003, -3.035690e-002, -2.726729e-003, -2.641628e-002, 3.103859e-003, -1.411510e-002, -6.175583e-003, 2.284843e-003, 1.373896e-003, 3.083840e-002, -1.883868e-002, -1.451261e-002, -4.934432e-002, -1.812328e-002, 3.102485e-002, -6.862042e-003, 7.093523e-003, -2.307002e-003, -3.105845e-002, 5.254700e-003, 2.285357e-002, -2.621838e-003, -8.910799e-003, 2.645572e-003, -1.435779e-004, -5.526395e-003, -5.298625e-003, -3.522877e-002, 5.767516e-003, -2.591364e-002, -7.709536e-003, -3.092355e-002, 3.056517e-002, -6.340592e-003, -3.844512e-003, -8.906914e-003, 5.199839e-003, 1.229046e-002, 4.636864e-003, -1.711132e-003, 2.386247e-002, 1.453080e-002, -2.501149e-003, 3.176402e-003, -1.829745e-002, 1.497519e-002, 3.619214e-002, 1.450594e-002, 2.297497e-002, 2.334934e-002, 2.308216e-003, 1.448400e-002, 1.000638e-002, 2.970880e-003, 2.295038e-002, -1.227593e-002, 4.022669e-003, -7.547630e-003, 1.819867e-002, 1.236747e-002, 1.819867e-002, -7.547630e-003, 4.022669e-003, 2.701438e-002, 2.961390e-002, -9.508894e-003, 1.121462e-002, -4.068322e-004, 2.001802e-002, 3.489666e-002, 6.448292e-002, -2.461368e-003, -1.212001e-002, -4.243964e-002, 8.246985e-003, 6.660455e-003, 2.754328e-002, -1.677145e-002, 7.401971e-002, 4.534187e-003, 3.583294e-002, 4.386364e-002, -2.599583e-002, -3.749696e-002, 3.692933e-002, -4.076222e-002, 1.383217e-002, -3.842406e-002, -6.690266e-003, 1.469252e-002, -7.123360e-004, -4.076431e-002, -7.123360e-004, 1.469252e-002, -6.690266e-003, -8.977919e-003, 7.160889e-002, -2.408617e-002, 1.960046e-002, 1.910228e-002, -9.149663e-003, -1.089041e-002, -2.093832e-002, 9.530764e-003, 4.628672e-002, -4.759324e-003, -4.226031e-002, 3.341105e-002, 3.515475e-003, -2.025068e-002, -2.059859e-002, 9.235668e-003, -6.142845e-003, 6.263251e-002, 6.640854e-002, 6.644532e-002, 3.438079e-002, -1.110677e-002, -4.893528e-002, 1.371634e-002, 1.247686e-003, 2.923629e-003, -3.298441e-003, -5.460485e-002, -3.298441e-003, 2.923629e-003, 1.247686e-003, -1.920429e-002, -9.167138e-002, -5.456966e-002, 6.256857e-002, -2.698986e-002, -1.040709e-002, 1.654684e-002, 1.909426e-002, 1.949352e-003, 1.213936e-002, -1.865313e-002, -7.537798e-002, -3.054965e-002, 5.247713e-002, 6.002054e-002, 6.909960e-002, -1.435841e-002, 3.983769e-002, -1.930877e-002, 5.054912e-002, -9.491538e-002, 4.453822e-002, 9.962631e-003, -5.592721e-003, 3.142985e-002, -1.755028e-003, -4.996470e-003, 1.189709e-002, -3.350488e-002, 1.189709e-002, -4.996470e-003, -1.755028e-003, 8.388676e-003, -1.728758e-002, 5.036022e-003, 4.800273e-002, 2.768802e-002, -2.344950e-003, -3.470637e-002, -1.272740e-001, 1.013751e-001, 8.064151e-002, -5.475886e-002, 7.432124e-002, -1.354256e-002, 4.359183e-003, -2.668090e-003, 4.541529e-002, 1.754958e-002, 3.561023e-002, -5.871223e-002, 4.345240e-002, 1.033545e-001, -2.316727e-002, -2.548865e-002, 2.695061e-002, 1.688906e-002, 1.687788e-003, -6.622664e-002, 1.687788e-003, 1.062903e-001, 8.794372e-002, -4.386989e-002, -6.220926e-003, 1.185474e-001, -6.901191e-002, -4.598355e-002, -6.901191e-002, 1.574042e-001, -4.889359e-002, 1.332475e-003, 1.799947e-001, 4.639865e-002, -1.233941e-002, 1.876534e-002, -1.233941e-002, 8.438073e-002, 1.052057e-001, 3.133157e-002, 1.462774e-001, 6.538382e-002, -1.352245e-002, 4.852226e-002, -1.352245e-002, 4.122775e-002, 3.206837e-002, -1.667461e-001, 9.886014e-002, 5.925784e-003, 4.274713e-003, -1.292495e-003, 4.274713e-003, -1.799091e-002, -5.964596e-002, 1.209912e-001, 9.282541e-004, -1.536381e-001, -5.371133e-003, 2.019901e-002, -5.371133e-003, 4.531753e-002, 1.643713e-002, -1.879033e-002, 9.259464e-002, -1.352134e-001, -2.042065e-002, 9.665137e-002, -2.042065e-002, 6.235472e-002, 7.267732e-002, -1.460925e-005, 2.238604e-001, -1.499311e-002, 1.402911e-002, -4.272059e-003, 1.402911e-002, 9.796942e-003, 1.627594e-001, -1.249135e-002, 3.894132e-002, -5.686201e-002, -2.368141e-002, 7.968498e-003, -2.368141e-002, 7.945773e-002, -6.373184e-002, -6.764102e-003, 1.570647e-001, -5.199382e-002, 5.817877e-003, -1.049349e-001, 5.817877e-003, -5.897467e-002, 4.616316e-002, 9.306328e-003, -1.184213e-001, -6.496288e-003, -3.857260e-002, 8.673101e-003, -3.857260e-002, -2.050767e-001, 8.405698e-002, -6.484647e-003, 7.196347e-002, -9.523083e-002, -8.665891e-003, -4.734628e-002, -8.665891e-003, 1.270315e-001, 1.207423e-001, -3.538077e-002, -9.737198e-002, 2.904595e-002, 2.237171e-002, 4.730057e-002, 2.237171e-002, 9.572119e-002, -1.185572e-001, 1.205137e-001, -1.342270e-001, 9.352622e-002, 4.638095e-002, 7.670791e-002, 4.638095e-002, -7.228864e-002, -5.628159e-002, -4.280408e-002, 1.470626e-002,

© ISO/IEC 2004 — All rights reserved


Copyright International Organization for Standardization
Provided by IHS under license with ISO
No reproduction or networking permitted without license from IHS
Not for Resale

8.162580e-002, 2.426399e-002, -9.867410e-002, 2.426399e-002, -1.287357e-001, 2.635793e-002, -8.546131e-002, -1.787394e-001, 5.153117e-002, 3.213925e-002, -1.775685e-002, 3.213925e-002, -3.815561e-003, -1.013829e-001, -1.177901e-001, 1.772524e-001}, {-3.463209e-003, -7.463204e-003, 5.239061e-003, 6.236935e-003, 8.541346e-003, -6.653360e-003, -6.912712e-003, 4.961987e-003, -6.566898e-003, 4.961987e-003, -6.912712e-003, -6.653360e-003, 8.541346e-003, 6.236935e-003, 5.239061e-003, -7.463204e-003, 1.458847e-002, -2.234058e-003, -8.905943e-003, 2.430919e-003, 1.111103e-003, 1.120206e-003, -5.057896e-003, 2.851121e-003, 1.466355e-002, -2.463713e-002, -1.281727e-002, 4.140449e-003, 4.101683e-003, -2.164840e-003, -3.155179e-003, -3.111884e-003, 3.081448e-003, 1.092229e-002, -2.057826e-002, 7.378896e-003, 1.224162e-002, 8.124721e-003, 1.762277e-004, 1.782283e-003, 1.966113e-002, -2.006278e-002, -1.072003e-002, -1.368609e-003, 1.236898e-002, -6.463839e-003, -1.708759e-002, -9.177409e-003, 1.156693e-003, -9.668188e-003, 1.309285e-002, 6.784488e-005, 9.756722e-003, -6.637112e-003, 4.822598e-003, 2.357773e-002, -9.304075e-003, -1.887877e-002, 3.652313e-003, 1.086810e-002, 8.158960e-003, -5.579014e-003, 2.129823e-002, -4.204881e-003, 1.418968e-002, 8.653223e-003, 1.511458e-002, 8.175846e-003, -6.407193e-003, 1.656220e-002, 1.247906e-002, 4.166454e-002, 4.941521e-003, 2.233650e-002, 5.246821e-003, -2.941261e-003, 1.092645e-002, -7.550033e-004, 2.990323e-002, 7.908129e-004, 8.447083e-003, 6.740192e-003, 1.686045e-002, -2.137435e-002, -1.770846e-002, 1.281462e-002, 1.634503e-002, 7.718125e-002, 4.402523e-002, 1.263906e-002, 4.079378e-002, -2.837117e-003, 6.658610e-003, -1.694701e-002, 2.390137e-002, 8.086536e-003, 2.615008e-003, -2.347029e-003, 1.480841e-002, -7.158361e-004, -1.370701e-003, -1.123448e-003, 2.397215e-002, 4.179619e-002, 5.945678e-002, -6.450802e-003, 2.595456e-003, 2.418923e-002, -1.054472e-002, 1.358187e-002, 8.820180e-003, 1.445833e-002, 1.147793e-002, 2.293837e-002, 3.260492e-002, -6.101602e-003, 3.475114e-002, 5.668140e-003, 5.817295e-002, 2.749283e-002, 5.610522e-002, -2.445924e-002, 2.120455e-003, -1.803005e-002, 1.412361e-002, 3.226028e-002, 1.124619e-002, -7.092239e-003, 8.381957e-003, 9.714227e-003, 1.056516e-002, -8.499808e-003, 2.749173e-002, -8.499808e-003, 1.056516e-002, 9.714227e-003, 3.476306e-002, -1.252601e-003, -1.346151e-002, -5.795002e-003, -7.198639e-003, 2.508223e-002, -5.794223e-002, 5.158783e-002, -8.688488e-003, 1.999222e-002, 9.281137e-003, 7.792084e-003, 8.372026e-002, 1.845593e-002, 7.611985e-004, 6.911258e-002, 3.317077e-002, 1.239422e-002, 1.380577e-002, 8.235274e-003, 8.448863e-002, 5.546826e-002, 1.210395e-001, 1.132812e-001, 1.721063e-002, 6.166764e-003, -6.399448e-003, 1.143916e-002, 2.482600e-002, 1.143916e-002, -6.399448e-003, 6.166764e-003, 5.208730e-004, 3.126851e-002, -6.154878e-002, -4.391374e-003, 1.992602e-002, 1.696522e-002, 2.890819e-002, -2.435063e-002, 1.947603e-002, 9.595645e-002, -2.334863e-002, -2.543306e-002, 5.949289e-002, 4.341602e-002, 5.604307e-002, 9.113148e-003, 2.093848e-002, 1.631775e-001, 7.203508e-002, 1.022736e-001, 6.046735e-002, 3.695219e-002, 6.292381e-003, -2.422846e-002, -1.410945e-002, 8.697005e-003, 1.366499e-003, 1.348135e-002, -3.550207e-004, 1.348135e-002, 1.366499e-003, 8.697005e-003, 1.288275e-002, 7.136228e-002, 1.788822e-003, -2.886852e-002, 8.413001e-002, 1.171746e-002, -2.480867e-002, 2.901702e-003, -2.376557e-002, -2.967431e-002, -1.837667e-002, 3.091116e-002, 9.333295e-002, 3.850530e-003, -3.957358e-002, -5.389308e-002, -1.865651e-002, -1.160467e-002, 1.552046e-002, 3.576481e-002, 5.808763e-002, 2.868622e-002, -3.242829e-002, -2.139588e-002, -1.494634e-002, 8.356167e-003, 6.477770e-004, 1.008697e-002, 2.101556e-002, 1.008697e-002, 6.477770e-004, 8.356167e-003, 3.962628e-003, 8.612056e-003, -2.083726e-005, 4.749031e-002, -1.805756e-002, 2.496662e-002, 2.913015e-002, 3.991639e-002, -2.233059e-002, -6.647092e-002, 2.358774e-002, -5.770427e-002, 4.260872e-002, 4.758193e-003, 4.812079e-003, -4.482892e-002, -3.889368e-002, -5.693308e-002, -2.744934e-002, -1.002531e-003, -2.140158e-002, 6.364016e-002, -9.694537e-003, -4.605294e-002, -1.636993e-002, -4.437364e-002, 3.915506e-002, -4.437364e-002, -1.075583e-002, -6.837556e-002, 4.676925e-002, 1.147424e-001, -1.573965e-002, -9.543378e-003, 1.253269e-001, -9.543378e-003, 2.970375e-002, -1.291997e-001, 5.233590e-002, 3.048202e-001, 4.314951e-002, 6.566483e-003, -2.668323e-002, 6.566483e-003, -3.129745e-002, 1.287986e-001, 1.303061e-002, 1.057603e-001, -1.471468e-002, -2.435873e-002, 8.138205e-003, -2.435873e-002, -1.815063e-003, 1.097155e-001, -3.514026e-002, -1.301957e-001, 3.680343e-002, -2.212719e-002, 2.836740e-002, -2.212719e-002, -9.806288e-002, -3.943532e-002, 9.376593e-002, -2.123382e-001, 3.688104e-003, -3.260539e-002, -1.042590e-001, -3.260539e-002, -1.131471e-001, -1.368600e-001, 3.884108e-002, 5.388596e-002, -4.320007e-002, -5.281039e-002, -4.351923e-002, -5.281039e-002, -1.439359e-001, 5.331551e-002, -5.760076e-002, -1.159473e-001, 3.197587e-002, -2.477893e-002, -3.493005e-002, -2.477893e-002, -1.143386e-001, -1.557975e-001, -3.078448e-002, -1.174652e-001, -1.719255e-003, -3.457388e-002, -6.639818e-002, -3.457388e-002, -9.397799e-002, 7.173229e-002, 8.464483e-002, 1.202236e-001, -2.418964e-002, -3.494697e-002, 1.073840e-002, -3.494697e-002, -1.239868e-001, 1.632574e-002, 1.358798e-001, -3.089245e-002, 2.444703e-002, -4.669102e-002, 4.535851e-003, -4.669102e-002, -7.202123e-002, -6.530273e-004, 5.521972e-002, 1.481785e-002, -1.307007e-002, 5.576335e-003, -1.474635e-001, 5.576335e-003, -6.043696e-002, 9.054009e-002, -1.822527e-002, -2.974480e-003, 1.661864e-002, -1.370386e-002, 1.030458e-002, -1.370386e-002, -3.260152e-002, 1.045048e-001, -1.463614e-002, -8.280960e-002, -4.819194e-003, -4.090792e-002, 1.597595e-001, -4.090792e-002, 1.858217e-002, 2.100986e-001, -6.312965e-002, -1.725703e-001, -


© ISO/IEC 2004 — All rights reserved

Copyright International Organization for Standardization
Provided by IHS under license with ISO
No reproduction or networking permitted without license from IHS
Not for Resale

4.312068e-002, -3.497535e-002, 1.269177e-001, -3.497535e-002, 8.740896e-002, -4.233105e-002, 4.213217e-002, 1.087131e-001, 1.679737e-002, -9.473584e-003, 2.490847e-002, -9.473584e-003, 1.208018e-002, -6.915542e-002, 1.994706e-002, 5.980699e-002}, {5.218618e-003, -4.214707e-003, 7.277096e-004, -5.260273e-003, -1.519306e-003, 2.524683e-003, 1.039261e-003, -1.385790e-003, -1.329002e-002, -1.385790e-003, 1.039261e-003, 2.524683e-003, -1.519306e-003, -5.260273e-003, 7.277096e-004, -4.214707e-003, -2.731952e-002, 1.017656e-002, 3.976018e-003, 8.606238e-003, 6.126892e-003, -1.009916e-002, -2.639279e-003, 9.462167e-003, 4.585840e-003, 3.180206e-002, 6.237222e-003, 7.480539e-003, -5.367245e-003, -4.084917e-003, -9.896244e-003, 1.101641e-002, 3.247868e-003, -1.499690e-002, -4.239766e-003, 1.407079e-002, 1.671428e-003, 2.151341e-003, -1.666223e-002, 1.386748e-003, 2.136670e-003, 3.210417e-003, 2.828555e-002, 4.584559e-004, -1.223165e-002, 3.506317e-003, -2.236675e-002, 4.816109e-003, 3.346878e-002, 4.611139e-003, 2.435429e-003, 1.538865e-003, -7.669221e-003, 3.699708e-003, -2.757617e-002, -1.899117e-002, 7.184856e-003, -1.028703e-002, 1.254708e-002, -2.731669e-002, 1.451726e-002, -9.293539e-003, -1.959127e-003, 2.537255e-002, 3.751280e-003, 1.672386e-002, 2.023493e-003, 1.595233e-002, 2.519161e-002, 1.348744e-002, 6.410416e-003, -1.377511e-002, 1.136851e-002, -5.822451e-003, 3.824363e-003, 2.629514e-002, 1.440070e-002, -3.328050e-003, -2.690802e-002, 5.574233e-003, 9.908573e-003, -5.519918e-003, -2.472041e-002, 3.272180e-004, 1.703451e-002, -1.944245e-002, 4.573631e-002, 4.394976e-002, -3.327880e-003, 1.038733e-002, 7.512293e-003, -3.925823e-003, -1.116070e-002, -1.169317e-004, -2.322060e-002, 1.733424e-003, 1.083003e-003, -7.258046e-003, -1.685849e-002, 1.745911e-003, 4.662817e-002, 1.564502e-002, 6.099155e-002, 1.095515e-002, 2.467502e-004, 7.629039e-003, -4.405435e-003, 1.975979e-002, 2.106731e-002, -6.415180e-003, -1.409785e-002, -4.747419e-003, -9.836682e-003, 3.593712e-004, -5.234100e-003, 2.324133e-002, -3.097626e-003, -9.894673e-003, 1.409952e-002, -3.549159e-002, -2.389125e-002, 2.281029e-003, -4.956746e-003, 2.143051e-002, 1.593426e-002, 1.783127e-002, 2.980389e-003, 3.157331e-003, -8.382425e-003, 9.317722e-003, 5.395743e-004, -1.195423e-002, -5.162104e-003, -1.195423e-002, 5.395743e-004, 9.317722e-003, -3.041065e-002, -1.296613e-002, 2.730673e-002, 1.788325e-002, -1.554616e-002, -3.368003e-002, -4.928992e-004, 1.123340e-002, 5.233988e-002, -3.578061e-002, -2.757376e-002, -3.970764e-002, 1.208429e-002, -1.026004e-001, -1.946600e-002, 1.586852e-002, 7.593194e-002, 1.022928e-002, -6.929684e-002, -4.296632e-003, -1.286407e-002, 2.938144e-002, 2.366828e-002, 8.975438e-002, 6.231933e-004, 5.503250e-003, -2.567446e-002, -1.513938e-002, 4.419389e-004, -1.513938e-002, -2.567446e-002, 5.503250e-003, -8.990491e-002, -1.404890e-004, 4.449771e-002, -6.157387e-003, 5.887938e-002, -4.768490e-002, -3.756238e-003, 6.920331e-003, 3.496016e-002, -7.111846e-002, -5.003904e-003, 2.792803e-003, -6.476370e-002, -3.738108e-002, -4.369158e-002, -6.779064e-002, 1.122770e-001, -1.417001e-002, -2.337434e-002, -3.756679e-003, -1.286329e-002, -4.108513e-003, -1.078577e-002, -3.674673e-002, 9.219017e-003, 1.374949e-002, 3.116307e-002, 6.825403e-003, 5.743017e-002, 6.825403e-003, 3.116307e-002, 1.374949e-002, -5.203282e-002, -2.999374e-002, -7.708271e-003, 2.404508e-002, 3.271749e-002, 3.492548e-002, -1.391187e-002, -1.324853e-002, 2.035587e-002, 2.306671e-002, -6.488760e-002, -5.457715e-002, 8.657542e-002, 4.704934e-002, 2.045695e-002, 2.451577e-002, 1.468427e-002, -9.567260e-003, 3.963659e-002, -1.877224e-002, 1.731289e-002, 6.671632e-002, 2.935169e-002, -6.424630e-003, 3.758833e-003, 1.922472e-002, 3.440332e-002, 6.909347e-003, 3.565442e-002, 6.909347e-003, 3.440332e-002, 1.922472e-002, -4.512622e-002, 2.605042e-004, -3.969348e-002, 5.579739e-002, 6.715121e-002, -2.399234e-002, 1.806277e-002, -5.639300e-002, 4.062597e-002, 1.623886e-002, 5.007710e-002, -3.214158e-002, 6.022427e-002, -4.664999e-002, 4.600097e-003, -1.548901e-002, -1.151799e-002, 8.355913e-002, 3.770795e-002, -6.580341e-002, -1.269334e-001, 3.693966e-002, 1.952156e-002, -6.736693e-002, -2.819523e-002, -3.053707e-002, 1.056608e-001, -3.053707e-002, -3.333896e-002, -3.375215e-002, 1.974976e-001, 4.793825e-002, -2.606813e-002, 6.971529e-003, 4.904504e-002, 6.971529e-003, -2.535181e-002, -4.347395e-002, -3.239673e-002, -2.372981e-001, 3.118051e-002, 5.396016e-002, 7.823565e-002, 5.396016e-002, 1.157428e-001, -7.853563e-002, -2.761716e-002, -7.374495e-002, -4.576564e-003, -1.046011e-002, 4.820064e-002, -1.046011e-002, 9.389541e-002, 6.010997e-002, 1.374212e-002, 3.893677e-002, 3.424569e-002, -1.487714e-002, 7.506753e-003, -1.487714e-002, -2.348924e-002, 1.464598e-002, -3.569185e-002, 1.612147e-002, 1.163525e-002, 2.630732e-002, -1.851347e-001, 2.630732e-002, -2.012471e-002, 6.759498e-002, 8.627061e-002, -4.077354e-002, -4.869911e-002, 9.007182e-002, -7.851779e-002, 9.007182e-002, 5.545872e-002, 1.524509e-002, -4.740991e-002, -1.210127e-002, 2.271835e-002, 2.538275e-002, 3.807371e-002, 2.538275e-002, 2.767610e-003, -6.132002e-003, -5.338209e-003, 4.779080e-002, -3.092657e-002, -4.377749e-002, -6.094486e-002, -4.377749e-002, -4.073070e-002, 1.151630e-001, 1.820689e-001, -2.533316e-001, 3.321530e-002, 2.944714e-002, -4.666804e-002, 2.944714e-002, 3.028726e-003, -1.026224e-001, -3.503686e-001, -6.209623e-002, 4.737571e-002, 2.474608e-002, -4.095537e-002, 2.474608e-002, -5.230189e-002, -4.075693e-002, 4.008465e-002, -5.516001e-002, -2.162329e-002, -6.711164e-002, -5.740391e-002, -6.711164e-002, -8.093142e-002, -4.853384e-002, 5.713741e-002, 1.713465e-001, 3.959787e-002, -4.672464e-002, -1.145542e-001, -4.672464e-002, -3.888423e-002, 4.400614e-002, -4.678388e-002, 6.710817e-002, -3.266758e-002, -2.767168e-002, 2.583917e-002, -2.767168e-002, -8.357859e-002, -3.287039e-002, 2.045116e-002, 9.797514e-002, -

© ISO/IEC 2004 — All rights reserved


Copyright International Organization for Standardization
Provided by IHS under license with ISO
No reproduction or networking permitted without license from IHS
Not for Resale

4.117821e-002, -5.640091e-002, 8.061312e-002, -5.640091e-002, -1.557812e-001, -8.178339e-002, 3.856145e-002, -2.260113e-001, 1.918462e-002, -4.518996e-002, -4.513480e-002, -4.518996e-002, -8.994049e-002, 9.455841e-002, -1.092754e-002, -1.692661e-002},
{-2.124263e-003, -4.608514e-004, 1.641304e-003, 2.451397e-003, 6.034151e-004, -5.549739e-003, -9.662987e-004, 1.120580e-002, -9.372674e-003, 1.120580e-002, -9.662987e-004, -5.549739e-003, 6.034151e-004, 2.451397e-003, 1.641304e-003, -4.608514e-004, -1.914758e-002, -7.612397e-003, -7.029975e-003, -1.972095e-003, 6.200979e-003, -1.021719e-002, -2.299850e-002, 4.197253e-003, -8.938044e-004, -6.850923e-003, 1.075201e-003, -8.176234e-003, -1.278839e-003, -4.155515e-003, 7.620579e-003, 1.682706e-002, 2.890023e-002, -3.535774e-003, 1.234689e-002, 1.994898e-002, 1.435896e-002, -1.118254e-002, -5.952864e-003, 4.107862e-003, -2.354790e-003, 8.484663e-003, 8.574571e-003, 8.064169e-003, 2.788521e-002, 6.423795e-003, 1.158689e-002, 2.377218e-002, 1.780815e-002, -3.440135e-003, -1.595414e-002, -1.569004e-002, -8.962249e-003, 1.656986e-002, 5.339141e-003, -1.834575e-002, 2.184377e-003, 2.366566e-002, 1.284509e-002, -2.008935e-003, -9.907167e-003, -9.652583e-003, -3.812571e-003, 1.990743e-002, 2.834514e-002, 6.541615e-003, 1.986225e-002, 8.250297e-003, 1.890649e-002, 9.186509e-003, 2.010845e-002, 5.413244e-003, 2.576064e-002, 9.358034e-004, 1.037594e-002, 2.613030e-003, 1.884198e-002, 1.189049e-002, 9.590388e-003, 2.347836e-002, 2.098847e-002, 6.813454e-004, -5.909777e-003, 1.660280e-002, 9.688225e-003, -4.946344e-003, 1.462360e-002, 3.809992e-002, 1.013292e-002, 7.535750e-003, 5.847031e-003, -1.036036e-002, 9.018311e-003, -9.271754e-003, -1.099656e-002, -8.113598e-003, 1.948460e-002, -1.906931e-002, -9.691132e-004, 9.000838e-003, -3.871597e-003, -3.257251e-002, -1.263228e-002, -9.332610e-003, 1.417998e-002, 2.148585e-002, -1.191848e-002, 4.227764e-003, 7.519939e-004, -1.611113e-002, -3.477237e-003, 4.310955e-003, -2.390794e-003, 1.280520e-002, -9.571453e-003, 2.027517e-002, -1.404614e-002, 2.944123e-002, 5.737337e-003, 4.414220e-004, 6.847027e-002, 3.779097e-002, 6.772080e-003, 2.999922e-002, -2.429072e-002, 1.866895e-002, 5.657998e-003, 1.169097e-002, 3.414130e-002, -8.285109e-003, -1.650151e-002, 2.169037e-003, 7.724467e-003, 2.169037e-003, -1.650151e-002, -8.285109e-003, -3.753221e-002, -7.421029e-003, -1.631000e-002, 4.287918e-002, -1.844811e-003, 8.630024e-003, 8.588637e-003, 5.496394e-002, -5.793250e-002, -5.555837e-002, -7.110348e-002, -6.454323e-002, 2.545112e-002, -3.023776e-003, 3.186621e-003, 6.616511e-002, -6.530168e-002, 2.672323e-002, -2.836463e-003, 8.725374e-002, -3.926093e-002, -9.066165e-002, -9.446777e-003, 6.085318e-003, -3.480664e-002, -3.676283e-003, 1.544889e-002, 1.219640e-002, -2.904948e-002, 1.219640e-002, 1.544889e-002, -3.676283e-003, -4.670417e-002, -2.049133e-002, -7.828747e-002, 6.252813e-002, 4.651318e-002, 2.019508e-002, -2.047802e-002, -1.086221e-002, 9.479359e-002, -2.874216e-002, -3.936331e-002, 6.724076e-002, 1.474292e-002, 9.751668e-003, 1.679278e-002, 6.500135e-005, 6.082036e-003, 2.633213e-002, -2.707614e-003, 2.706442e-002, -1.886569e-002, 6.605480e-002, 4.016912e-002, -7.916203e-003, -1.748913e-002, 2.920854e-003, -1.190257e-002, -3.865026e-003, 1.344542e-002, -3.865026e-003, -1.190257e-002, 2.920854e-003, -8.829638e-004, 7.149274e-003, 1.768629e-002, 1.009882e-003, -4.660142e-002, -1.001154e-002, -2.661777e-002, -1.056027e-002, 2.800076e-002, -5.816460e-002, 1.133508e-002, 7.712101e-003, 9.735022e-003, -2.186869e-002, 2.754665e-002, 2.463749e-002, -2.409464e-002, -1.101304e-001, -2.439947e-002, -5.482503e-002, 7.803010e-002, 4.882322e-004, 1.522916e-002, -3.595104e-002, 1.603020e-002, 8.754936e-003, -1.023583e-002, -9.185349e-003, 1.378154e-002, -9.185349e-003, -1.023583e-002, 8.754936e-003, -1.149381e-002, -2.170262e-002, -2.995546e-002, -8.060052e-003, 3.023381e-002, 2.001008e-002, 3.074277e-002, 1.783580e-002, 1.056677e-002, 1.278357e-002, -4.486609e-002, 3.201408e-002, -1.153308e-001, -1.673476e-002, -4.576060e-002, -4.684023e-002, 2.667213e-002, 1.981334e-002, -9.725938e-003, 7.516622e-003, -3.793847e-002, -3.790134e-002, -1.324267e-002, -1.628300e-002, -1.758883e-002, 2.575206e-002, -2.623568e-002, 2.575206e-002, 3.749052e-002, 5.580954e-002, -3.759072e-003, 4.667705e-002, 1.141308e-001, -4.705272e-002, -1.805588e-001, -4.705272e-002, 5.236402e-002, 1.467701e-001, 3.125229e-002, 2.075675e-001, -1.617958e-001, 1.040942e-002, 1.998728e-001, 1.040942e-002, -1.145194e-001, -8.030293e-002, 9.572978e-002, 1.704986e-001, 1.440537e-002, -3.426753e-002, 2.984504e-002, -3.426753e-002, 4.221516e-003, 9.805425e-002, -1.148928e-001, -2.439426e-002, -4.618417e-002, 2.612040e-002, 3.664903e-002, 2.612040e-002, 2.292367e-002, -3.864338e-002, -4.583013e-002, -6.202763e-002, -1.621652e-002, 1.361113e-002, 8.319417e-002, 1.361113e-002, -2.993080e-002, 8.680325e-002, -3.669444e-002, 5.240988e-002, 5.476140e-002, 1.118120e-001, -6.403589e-002, 1.118120e-001, -2.236156e-001, 1.007249e-001, -1.576129e-001, -8.264209e-002, 5.782242e-002, -4.366593e-003, -3.506210e-002, -4.366593e-003, -7.814749e-002, 6.746868e-002, 7.044312e-002, -5.238676e-002, 4.302557e-003, -3.382929e-003, -2.588542e-002, -3.382929e-003, -4.390095e-002, 3.204107e-002, 1.879969e-001, 5.184172e-002, 2.534719e-003, -6.917987e-002, 1.411277e-001, -6.917987e-002, 1.251310e-002, -7.205900e-003, 7.418997e-002, 1.325615e-001, 4.166313e-004, 2.132739e-002, 5.494622e-002, 2.132739e-002, -3.178881e-002, -5.758926e-003, 6.296463e-002, 7.198074e-002, 1.462947e-002, -5.291416e-003, -3.646365e-002, -5.291416e-003, 2.854183e-002, 1.387916e-001, -4.993230e-002, 1.064738e-002, -8.706583e-003, 3.004863e-002, 2.129835e-002, 3.004863e-002, -4.422143e-002, 5.063008e-002, -2.860073e-002, -9.499791e-002, -1.561983e-002, -1.493046e-002, -9.568689e-002, -1.493046e-002, -1.189759e-001, 7.592060e-002, -2.582799e-001, -1.087854e-002,


© ISO/IEC 2004 — All rights reserved

Copyright International Organization for Standardization
Provided by IHS under license with ISO
No reproduction or networking permitted without license from IHS
Not for Resale

6.067896e-002, -1.482175e-002, -1.627953e-001, -1.482175e-002, 1.024812e-002, -7.500618e-002, 1.678702e-001, 2.801150e-002, -5.969486e-002, 3.512140e-002, -1.517475e-002, 3.512140e-002, -5.958982e-002, -9.226356e-002, -6.059450e-002, 1.383623e-001},
{-5.841310e-003, 3.115060e-003, 6.377260e-003, 1.000522e-003, 4.228394e-003, -1.878793e-002, 6.319846e-003, 4.029844e-003, 2.012448e-002, 4.029844e-003, 6.319846e-003, -1.878793e-002, 4.228394e-003, 1.000522e-003, 6.377260e-003, 3.115060e-003, -8.125884e-003, -2.458498e-003, 1.748042e-002, -3.222528e-003, 9.380493e-003, -6.485218e-003, -1.046801e-002, 1.813883e-002, -1.692278e-002, 4.247756e-003, 1.803481e-002, -3.248214e-003, -6.069308e-003, 1.441965e-003, 1.884918e-002, 7.309872e-004, -5.755990e-003, -1.971978e-002, 1.572639e-002, 9.882641e-003, 4.396409e-004, -1.286344e-002, -1.823996e-003, 2.778448e-003, -1.154343e-002, 4.673092e-003, 8.837913e-004, -1.714741e-002, 8.839499e-003, -5.459824e-004, 2.725251e-002, -1.431584e-002, 1.871024e-002, -3.336572e-003, -5.843098e-005, -1.882970e-003, -2.311430e-003, -2.639675e-003, -1.552366e-002, -2.827598e-002, -3.510112e-002, -1.950492e-002, 2.274750e-002, -2.254598e-002, -2.074429e-003, 8.160199e-003, 1.098042e-002, -1.178189e-003, -2.072990e-003, -2.704808e-002, 6.341115e-003, -1.795214e-002, 1.376245e-002, 1.094311e-002, 3.697298e-002, 1.879809e-003, -1.528662e-002, -1.814068e-003, 1.168314e-002, 1.833523e-002, -1.852825e-002, 2.114735e-002, 1.302392e-002, -1.972646e-002, 1.560043e-003, -8.317278e-003, -3.485426e-003, -1.380111e-002, -1.180767e-002, 1.260150e-002, 3.518954e-002, -5.266033e-003, -1.094217e-002, 3.776805e-003, 2.663394e-003, -2.210641e-002, -2.464861e-003, -6.134695e-003, 1.402153e-002, -8.631699e-003, -4.074587e-003, -4.383004e-004, 1.546363e-002, 1.199500e-002, 1.362764e-002, 5.277063e-003, 1.287891e-002, 4.058496e-002, -1.951334e-002, -1.009197e-002, -9.863034e-003, -5.693088e-002, -4.013531e-002, -1.168326e-002, 1.839932e-002, -1.047017e-002, 5.254770e-003, 4.954139e-004, 1.602553e-002, 8.414887e-003, -3.516723e-003, 6.051203e-003, 1.763216e-002, -1.080750e-002, -9.246741e-002, -2.006085e-002, 3.396945e-003, -6.823759e-003, -4.642809e-002, 2.202730e-002, 2.960650e-002, -5.807688e-003, -2.313229e-002, -6.100933e-003, -1.044423e-002, 1.368673e-002, -7.975531e-003, 1.368673e-002, -1.044423e-002, -6.100933e-003, 2.552025e-002, -1.974700e-002, -4.006743e-004, 4.537215e-002, -4.556802e-002, -4.830411e-002, -9.219157e-002, -3.147549e-004, 4.469996e-002, 1.941541e-002, 1.448376e-002, 4.644444e-002, -2.892837e-002, -8.397817e-002, 2.204585e-002, 2.131707e-002, 2.689215e-002, -1.462951e-002, 8.435694e-003, 6.760561e-002, -1.184828e-001, -7.502125e-002, 9.244364e-002, 5.006216e-002, 1.593113e-002, 1.171312e-002, -1.687812e-002, 1.892988e-002, -3.254922e-002, 1.892988e-002, -1.687812e-002, 1.171312e-002, 8.629841e-003, 4.244936e-002, -3.952554e-002, -2.707941e-002, -1.212374e-002, 7.542310e-002, -2.120162e-002, -4.054181e-002, 1.814686e-002, 3.828445e-002, -2.442503e-002, 3.804461e-002, 8.889817e-003, -2.445615e-002, 6.263322e-002, 5.101059e-003, 3.412810e-002, 5.671580e-002, -1.437028e-002, 9.624538e-003, 3.596755e-002, 1.225455e-001, 6.907884e-002, 4.597695e-002, 1.067774e-002, -1.093244e-003, -9.597658e-003, -1.297792e-002, 4.009505e-002, -1.297792e-002, -9.597658e-003, -1.093244e-003, 1.699219e-002, 6.088635e-003, 5.542634e-002, -2.147310e-003, -6.074332e-002, 9.498194e-003, 9.637612e-004, -1.886113e-002, 2.753021e-002, 1.801411e-002, 4.859292e-002, 7.605770e-002, -7.003602e-002, 2.532699e-002, 2.909134e-002, 3.279506e-002, 1.523585e-002, -9.226238e-002, -8.854731e-004, 2.302093e-002, -2.823519e-002, 3.602411e-002, -3.475355e-002, -5.265771e-002, -9.317890e-003, -1.117451e-002, -2.511499e-002, -7.436704e-003, -1.083423e-002, -7.436704e-003, -2.511499e-002, -1.117451e-002, -4.658516e-002, 7.131249e-003, -3.415963e-002, -2.880743e-002, -3.743327e-002, -2.137586e-002, 3.593405e-002, 1.452466e-002, 2.256059e-002, 9.330361e-003, -2.671257e-003, -6.969067e-002, 3.884224e-002, 1.599210e-002, 3.717775e-002, 1.046905e-002, -4.135790e-002, -1.141131e-002, -7.225702e-002, -2.605127e-003, 5.880775e-002, 2.674995e-002, 9.136709e-002, -6.176084e-002, -2.555086e-002, 1.355357e-002, 7.496579e-002, 1.355357e-002, 3.726221e-002, -2.809389e-002, 1.773021e-001, 2.106845e-001, -2.265374e-002, -3.760310e-002, 1.857571e-001, -3.760310e-002, -3.037939e-002, 3.525835e-002, -7.699617e-003, -7.020284e-002, 1.321726e-001, 2.157021e-003, -2.349590e-001, 2.157021e-003, 3.025339e-002, 9.361555e-002, -7.129719e-002, -7.134862e-003, -3.073038e-002, 2.566868e-002, 1.305114e-002, 2.566868e-002, 9.927134e-002, 7.971872e-002, 6.343367e-002, 6.484202e-002, 9.306064e-003, 1.874059e-002, 1.297975e-002, 1.874059e-002, -7.777399e-002, -5.080159e-003, 2.739527e-002, 6.282348e-002, 1.576625e-002, 6.378284e-002, -3.799185e-002, 6.378284e-002, 1.051569e-001, -4.269857e-002, 9.299466e-002, -2.971590e-002, -6.231656e-002, 4.304074e-002, -1.112945e-001, 4.304074e-002, 1.515399e-001, -2.332745e-002, -5.898436e-002, -5.304838e-003, -2.319450e-002, -4.478224e-003, 4.185182e-002, -4.478224e-003, -2.397160e-002, -9.371769e-003, 4.183436e-002, 5.675764e-002, 4.227890e-002, -5.897448e-003, 2.494629e-003, -5.897448e-003, 1.165285e-002, 8.300290e-002, -1.069996e-001, -1.941250e-001, 1.031990e-002, -7.658180e-002, 1.601380e-002, -7.658180e-002, 9.920399e-002, -5.662881e-002, 9.756253e-002, 1.320281e-001, 3.863442e-002, -6.245620e-002, 5.187589e-002, -6.245620e-002, 6.982107e-002, -1.067459e-001, -1.001460e-001, -1.452564e-001, 1.577604e-002, 1.346010e-002, 3.242551e-003, 1.346010e-002, 3.341843e-002, -3.689152e-003, -1.801068e-002, -1.040502e-001, -3.200926e-002, 1.913713e-002, -7.916434e-002, 1.913713e-002, -4.696068e-002, -1.848037e-002, 2.547599e-002, -5.018252e-002, -9.911800e-003, -1.063408e-001, -1.108137e-001, -1.063408e-001, -9.188721e-002, 5.063879e-003, -5.407219e-002, -2.942857e-001, -

© ISO/IEC 2004 — All rights reserved


--`,,```,,,,````-`-`,,`,,`,`,,`---

Copyright International Organization for Standardization
Provided by IHS under license with ISO
No reproduction or networking permitted without license from IHS
Not for Resale

4.040725e-002, -1.799066e-002, -7.662531e-002, -1.799066e-002, -1.493480e-001, -1.627726e-001, -1.055832e-001, -7.325000e-002, -2.332110e-002, 5.154387e-002, -2.296050e-002, 5.154387e-002, -3.824141e-003, -5.096388e-002, -3.590313e-002, -5.342588e-002},
{-5.792098e-003, 1.001091e-003, 2.747563e-003, -4.847388e-005, -8.902536e-003, -4.512821e-004, 2.537152e-003, -2.853164e-003, 1.140885e-002, -2.853164e-003, 2.537152e-003, -4.512821e-004, -8.902536e-003, -4.847388e-005, 2.747563e-003, 1.001091e-003, 7.563028e-003, 5.986348e-003, 1.734550e-002, 4.594466e-003, -2.752445e-003, -1.075203e-002, -1.687210e-002, 1.201024e-002, 1.410539e-002, -2.033885e-002, -1.520036e-002, -1.304247e-002, -1.179571e-003, -1.792011e-002, 5.288957e-003, 2.196360e-004, 1.068986e-002, 9.752570e-003, -2.582826e-002, -4.682846e-003, -2.780749e-002, 1.314732e-002, -5.876053e-004, 1.361186e-002, -3.000349e-004, 8.406589e-003, -3.293622e-003, -8.992547e-003, -1.688603e-002, 8.378638e-003, -3.775529e-002, 1.543532e-002, 3.250260e-003, 4.190325e-002, -2.136414e-002, 1.679727e-002, 5.745009e-003, 1.217450e-002, 1.397897e-002, 1.820034e-002, -4.395701e-003, 9.163018e-004, -4.302370e-003, -3.894839e-002, -5.760566e-003, 9.561648e-003, -2.286516e-002, 1.901864e-002, -1.618372e-002, 5.823629e-003, -3.388215e-003, -2.740184e-002, -8.428208e-003, 2.879071e-003, -1.786242e-002, 1.278691e-002, -1.369864e-002, 3.940030e-003, 1.727652e-002, -1.208019e-002, -6.495361e-003, -1.446842e-002, -1.498419e-002, -1.314941e-002, -1.010723e-003, -1.149389e-002, -2.928193e-002, -2.112182e-004, -2.771273e-002, 5.092665e-002, 1.257415e-002, -3.653915e-004, 5.084735e-002, 9.661750e-003, -1.224528e-002, -1.112923e-002, -1.191727e-002, 2.323986e-002, 1.780686e-003, -3.811402e-002, -1.967764e-002, -3.033441e-002, -2.407400e-003, 1.485863e-002, -2.551893e-003, -5.018267e-002, 9.301159e-004, -7.520335e-003, 4.622144e-002, 3.082061e-003, -7.544375e-003, 2.715608e-003, 6.190934e-004, -1.363750e-002, 9.165865e-003, -3.229970e-002, -6.188171e-003, 1.570152e-002, 2.069596e-003, -2.092973e-003, -1.521622e-002, -3.399642e-002, -2.025054e-002, -7.845126e-004, 3.063211e-002, -2.537098e-002, 9.185815e-003, -1.943484e-003, -1.557631e-003, 2.215229e-002, -1.860229e-002, -1.301502e-002, 1.462911e-002, -3.061236e-003, 9.942591e-003, -7.730978e-003, -3.492694e-002, -7.730978e-003, 9.942591e-003, -3.061236e-003, -2.445368e-003, 9.874027e-002, 4.815136e-002, 2.637548e-002, 4.221823e-002, -2.249003e-002, -2.856798e-002, -9.277481e-002, -8.072252e-003, 2.190468e-002, -4.984513e-002, 1.498083e-002, 1.059331e-001, -1.143604e-002, 1.183942e-001, 4.234409e-002, -3.259406e-002, 6.081251e-002, -5.454199e-002, -1.347884e-002, -1.048968e-001, 5.690591e-002, 1.840639e-001, 1.117650e-001, 5.604051e-004, 9.572592e-003, 2.721166e-003, 6.026982e-003, -1.670535e-002, 6.026982e-003, 2.721166e-003, 9.572592e-003, -5.774462e-002, -7.542031e-002, -2.861626e-002, -5.210825e-002, 6.487825e-002, 5.224944e-002, -6.007482e-003, 1.065956e-001, -1.262465e-002, 7.450466e-002, 1.053559e-001, 4.177223e-002, 1.283940e-001, 2.811198e-003, 6.677122e-002, 6.232938e-002, -3.227335e-002, 4.177608e-002, 1.377188e-001, 1.158479e-001, 4.531926e-002, -3.362217e-002, 9.493758e-003, 2.468373e-002, -1.666023e-002, 4.935678e-003, 1.343306e-002, -4.741033e-004, 9.452810e-002, -4.741033e-004, 1.343306e-002, 4.935678e-003, -2.673462e-002, -1.159539e-002, 1.122030e-002, -4.032402e-002, -5.742425e-003, -2.858022e-002, 4.721889e-002, 2.270215e-002, -7.643880e-003, -5.862342e-003, -1.282875e-002, 1.721377e-002, 1.027394e-002, -2.605990e-002, -6.837366e-002, 6.163812e-002, 8.129076e-003, 2.357571e-002, 8.717880e-002, 3.216781e-002, -2.263998e-003, 3.052540e-002, -2.733254e-002, 4.233777e-002, -4.321381e-003, -4.002089e-003, 1.496545e-002, -1.198095e-002, 5.794439e-002, -1.198095e-002, 1.496545e-002, -4.002089e-003, -1.970322e-002, -5.587228e-003, 3.061430e-002, 1.913054e-003, -1.516733e-002, -5.207558e-002, 6.573514e-003, -2.492599e-002, 1.371584e-002, 1.208951e-001, -4.395085e-002, -3.435083e-002, -4.679539e-002, 9.016882e-002, 3.442155e-002, 2.607624e-002, 4.129622e-002, 1.309029e-001, 1.839847e-002, 2.818611e-002, 1.040057e-001, 9.304473e-002, 1.119935e-001, 5.877460e-002, -6.137639e-002, -4.255041e-003, -9.777527e-003, -4.255041e-003, -3.588303e-002, -1.696482e-001, -1.493739e-002, 1.249088e-001, 2.407176e-002, -3.355361e-003, -1.592360e-002, -3.355361e-003, -3.197759e-002, 5.876234e-002, -8.875546e-003, -8.652988e-002, 1.154699e-001, 6.102238e-002, -1.947736e-001, 6.102238e-002, -2.740789e-002, -1.535031e-001, -3.959391e-003, 1.404761e-001, -5.893452e-002, -2.393556e-002, -3.692962e-002, -2.393556e-002, 3.148557e-002, -1.149115e-002, -4.797720e-002, -7.543128e-002, 4.941672e-002, 2.010604e-002, 3.251825e-002, 2.010604e-002, 1.210298e-001, 1.960990e-001, -2.072351e-002, 9.488686e-003, 2.517015e-003, 6.372083e-003, -1.105014e-001, 6.372083e-003, -9.738312e-002, 5.296509e-002, 3.865636e-002, -9.477972e-002, -7.358282e-002, 4.450860e-002, 3.413315e-002, 4.450860e-002, -6.391363e-004, -4.522827e-002, -1.102515e-002, 6.572974e-002, 1.760781e-002, 3.048216e-002, -5.624426e-002, 3.048216e-002, 1.833261e-001, 2.444333e-002, 4.947847e-002, 3.785611e-002, -2.205012e-002, -4.315148e-002, -4.058154e-002, -4.315148e-002, -8.255341e-002, 8.162116e-002, -1.014788e-002, -4.824023e-002, -1.193026e-002, -7.189603e-002, 4.455793e-002, -7.189603e-002, 2.851538e-002, 1.591627e-001, 1.506745e-001, 5.119694e-002, -7.672867e-003, -8.254895e-003, -4.234114e-002, -8.254895e-003, -4.194430e-002, -8.842207e-002, 1.025171e-001, 1.015790e-001, -2.103764e-002, -3.046171e-002, -4.808485e-002, -3.046171e-002, 5.386547e-002, -7.843261e-002, -4.437645e-002, -8.956705e-002, 1.417510e-003, 2.529967e-003, -6.517027e-003, 2.529967e-003, 9.223470e-002, -3.992312e-002, -1.873004e-002, 1.452488e-001, 1.590264e-002, 2.334361e-003, 1.161014e-002, 2.334361e-003, 1.318441e-001, 2.220492e-002, -7.368572e-002, 6.770488e-002,


© ISO/IEC 2004 — All rights reserved

Copyright International Organization for Standardization
Provided by IHS under license with ISO
No reproduction or networking permitted without license from IHS
Not for Resale

2.122491e-002, 8.193669e-003, -4.090328e-002, 8.193669e-003, 1.695982e-001, 7.997002e-002, -6.604887e-002, 5.607047e-002, 3.164217e-003, 1.797012e-002, -6.668610e-002, 1.797012e-002, -8.918657e-003, 1.544565e-002, 5.958634e-002, -2.683544e-002}, {5.554831e-005, -2.760960e-003, -3.883315e-003, -1.897255e-003, -1.662532e-003, 3.774719e-003, -6.633719e-003, -5.642918e-004, 2.868224e-003, -5.642918e-004, -6.633719e-003, 3.774719e-003, -1.662532e-003, -1.897255e-003, -3.883315e-003, -2.760960e-003, -6.621146e-003, 9.378088e-003, 2.440102e-002, 3.170871e-003, -1.711069e-002, -6.659957e-003, -1.016181e-003, 2.385592e-003, -4.563450e-003, 1.198890e-002, -2.336739e-002, -1.404342e-002, -9.846602e-003, 1.740258e-002, 2.445112e-002, 1.533827e-003, 2.755121e-002, 3.264759e-003, 6.900028e-003, -7.120294e-003, -1.079158e-002, 1.449922e-003, 1.108804e-002, 1.856894e-002, -1.554911e-002, -9.342475e-004, 1.708295e-003, 4.956530e-003, 1.602850e-002, -3.620968e-003, 6.981410e-003, -2.386933e-002, -1.180116e-002, -9.361720e-003, 2.800893e-003, -2.848068e-002, -1.703541e-002, -9.907533e-004, 1.005869e-002, -6.799748e-003, 1.340876e-002, 6.628585e-003, 2.672219e-003, -2.431222e-002, -1.556981e-002, -1.410542e-002, -9.486857e-003, -3.689997e-003, -8.720827e-003, -3.167787e-003, 1.428043e-003, 4.590252e-003, -1.309887e-002, 1.192632e-002, 2.076935e-002, 1.570346e-002, -2.834390e-003, -1.986394e-002, 2.576383e-003, 6.407456e-003, -2.014380e-002, -8.380294e-003, -3.919412e-003, -2.274539e-002, -8.490066e-003, -4.353184e-003, -1.064745e-002, -2.144085e-003, -5.321919e-003, -5.995151e-003, -7.791667e-003, -2.083165e-002, -1.039832e-002, -6.629079e-004, 5.323506e-005, 1.897627e-002, -1.022602e-002, -4.206294e-003, -7.111942e-003, -2.392753e-002, -1.098117e-002, -7.180555e-003, 1.520342e-002, 1.809761e-002, 4.212106e-003, 1.614265e-002, -4.127552e-002, -2.011263e-002, -1.824435e-002, -1.812121e-002, -2.458130e-003, -7.370062e-003, 4.503676e-003, 5.661278e-003, 1.605233e-002, -1.958414e-002, 1.283195e-002, 3.816453e-003, 4.029151e-002, 7.223775e-003, 3.262277e-002, 1.105421e-002, 4.462159e-003, 1.400268e-002, 1.401565e-002, -1.790132e-002, 2.706306e-002, 3.065041e-002, 4.275809e-003, -5.825799e-003, 1.858702e-003, 2.666359e-003, -5.881898e-003, 1.158132e-002, 2.274275e-002, -4.163526e-003, 4.336043e-002, -4.163526e-003, 2.274275e-002, 1.158132e-002, 1.506723e-002, -5.185330e-002, 3.056840e-003, 2.733019e-002, 5.059114e-002, -3.358515e-002, 1.778432e-002, 4.490912e-002, -3.269062e-002, -5.152934e-002, 1.880761e-002, -6.908036e-002, 3.564390e-002, -3.923331e-002, -3.725117e-002, -6.739505e-003, -4.705951e-002, 9.020133e-003, 1.502199e-002, 7.798492e-002, 5.364314e-002, -6.069144e-002, -2.418831e-002, 2.044599e-002, 3.748010e-003, 9.841085e-003, 1.055551e-002, -8.491792e-003, 1.239589e-002, -8.491792e-003, 1.055551e-002, 9.841085e-003, 5.097908e-002, 4.516425e-002, -2.220423e-002, -3.463627e-002, 2.169649e-002, 3.979661e-002, 3.583829e-002, -5.518886e-002, -3.023490e-002, -1.081290e-002, -1.943166e-002, -2.466203e-002, 1.684063e-002, 1.081902e-002, 1.769357e-002, -1.884793e-003, 8.590406e-003, 7.070907e-002, -4.634978e-002, -7.830179e-002, 3.823670e-002, 7.820805e-002, -2.795766e-003, -2.971505e-002, 4.653354e-003, 1.232931e-002, 2.928176e-002, 1.743533e-003, 3.646156e-002, 1.743533e-003, 2.928176e-002, 1.232931e-002, -3.817788e-002, -1.880101e-002, 2.151910e-002, 3.675548e-002, 4.755501e-002, -2.416297e-002, 4.854609e-002, -1.672530e-002, 3.216894e-002, -3.139637e-002, -1.395336e-002, -6.873023e-002, 6.744217e-002, 1.420394e-002, 1.656033e-002, 1.465231e-002, -1.360058e-002, -1.503353e-002, 4.727029e-002, 3.692129e-002, 4.083398e-002, -6.773571e-002, -1.151903e-003, -1.593595e-002, -2.463918e-003, 1.332127e-002, 1.874949e-002, 8.198448e-003, 1.320888e-002, 8.198448e-003, 1.874949e-002, 1.332127e-002, -5.379260e-002, 4.589723e-003, 1.272151e-002, 3.127323e-002, 4.538853e-002, -2.891354e-002, -1.658462e-002, -3.535261e-002, 4.178456e-002, 3.379790e-003, 1.448284e-002, -1.622366e-002, 6.878101e-002, 1.644991e-002, 1.782281e-003, 1.177715e-002, 2.969945e-002, -3.687008e-002, 1.432628e-003, 8.848178e-002, 9.855255e-003, 3.469977e-002, 6.064117e-002, -1.127141e-002, 7.802951e-003, -3.649340e-002, -2.874663e-002, -3.649340e-002, 6.963666e-003, 2.076858e-001, -8.167211e-002, -5.234765e-002, -3.149071e-002, 2.436778e-002, -1.932558e-001, 2.436778e-002, -1.387502e-001, -2.423348e-001, -2.511813e-002, 1.821422e-001, -3.314564e-002, 1.056363e-001, -2.649303e-002, 1.056363e-001, -2.064588e-001, 1.060919e-001, 2.743572e-002, -8.274930e-002, -2.664099e-002, -2.134563e-002, 4.016572e-002, -2.134563e-002, -7.923041e-002, 9.304856e-002, -6.065914e-002, 4.434764e-002, 4.492195e-003, -9.623930e-003, -7.196321e-002, -9.623930e-003, 7.265298e-002, 1.229079e-001, -1.254380e-001, 1.399899e-001, 1.331366e-002, 3.878637e-002, -1.898230e-001, 3.878637e-002, 9.341883e-002, 8.762586e-002, 3.641493e-002, 9.184130e-002, 5.248534e-002, 6.074062e-002, -4.429315e-002, 6.074062e-002, -6.552191e-002, 1.160366e-001, -2.448810e-001, -2.358766e-002, 1.104929e-002, 1.175212e-002, -3.557165e-002, 1.175212e-002, -2.875541e-002, 5.703965e-002, 2.923303e-003, 3.321991e-002, -3.861205e-002, -2.933963e-002, -5.151164e-002, -2.933963e-002, -1.104632e-001, 1.742718e-001, -1.135694e-002, -2.432540e-001, 1.331317e-002, -4.986193e-002, -1.709529e-002, -4.986193e-002, 5.889741e-002, 3.918102e-002, -9.849964e-002, -5.654713e-002, 2.621574e-002, -5.718403e-002, -1.296981e-002, -5.718403e-002, -1.295464e-001, -4.535170e-002, 4.257402e-002, -2.214141e-003, 6.084686e-003, -3.821258e-002, 9.970952e-003, -3.821258e-002, 2.419621e-003, -2.056608e-001, -6.222705e-003, -5.962889e-002, 3.078943e-002, -2.324591e-002, -7.537453e-003, -2.324591e-002, 5.063150e-003, -6.068956e-002, 4.490449e-002, 4.290886e-002, -8.371947e-004, -5.051900e-002, 2.557140e-002, -5.051900e-002, 5.323633e-003, -8.926650e-002, 2.628969e-002, -2.716053e-002, -

© ISO/IEC 2004 — All rights reserved


Copyright International Organization for Standardization
Provided by IHS under license with ISO
No reproduction or networking permitted without license from IHS
Not for Resale

4.045405e-002, -8.103922e-003, -6.647097e-002, -8.103922e-003, 1.717812e-002, -2.063345e-002, -1.611614e-001, -9.014836e-003, 5.689704e-003, -2.336800e-002, -5.501676e-003, -2.336800e-002, 9.846743e-002, 5.504115e-002, -5.707414e-002, -7.333410e-002},
{-3.224428e-004, -6.628857e-004, 1.373760e-004, 1.358272e-003, -6.876037e-003, -3.571190e-003, 2.420036e-003, 5.751637e-003, -9.093629e-003, 5.751637e-003, 2.420036e-003, -3.571190e-003, -6.876037e-003, 1.358272e-003, 1.373760e-004, -6.628857e-004, -3.842788e-002, 8.963537e-003, -5.823178e-003, -5.596371e-003, -4.222013e-003, 2.491638e-002, -1.435956e-003, 3.633505e-003, 1.920119e-002, -6.244934e-003, -4.005483e-003, 1.088766e-003, 3.022893e-004, -3.945744e-003, 4.022447e-003, 7.313257e-003, 1.947670e-002, 5.600279e-003, 1.383971e-002, 1.416641e-002, -5.041516e-003, -1.545068e-003, -2.012730e-002, -1.466735e-003, -1.922197e-002, 9.574719e-003, 1.029759e-002, -1.470291e-002, -6.143347e-003, 1.308115e-002, 1.099999e-002, 1.447890e-002, -2.020989e-002, -2.057198e-003, -1.002526e-002, 9.538116e-003, 1.494182e-004, 1.187653e-002, -6.561386e-003, 2.801870e-003, -3.684588e-002, -7.918569e-003, -1.386743e-002, 4.020331e-003, 1.959799e-003, -1.342450e-003, -1.375293e-002, -1.421610e-002, 1.658461e-003, 2.776221e-002, -4.749144e-003, -8.000824e-004, 6.588330e-004, 2.080110e-002, -1.048116e-002, -1.055080e-002, -2.642212e-002, 1.324745e-002, 4.164718e-003, -1.099196e-002, 1.674716e-002, -5.661366e-003, 3.201861e-003, 1.465403e-002, -1.131991e-002, -6.201826e-003, -2.293725e-002, 2.342520e-002, -1.080579e-002, 1.261766e-002, 6.544208e-003, 4.140872e-003, -1.274271e-002, -8.345340e-003, 2.357106e-003, -7.056358e-003, 1.552272e-002, 6.952012e-003, 1.434245e-002, -5.129321e-003, 3.425574e-003, 4.761379e-004, -7.979704e-003, -7.377628e-004, -2.216670e-002, -1.811783e-002, -2.004761e-003, -1.961594e-002, -2.525202e-003, 9.070833e-003, -1.862123e-002, 1.418154e-002, 8.622673e-003, -3.242714e-003, -2.298237e-002, 1.666311e-003, -1.050698e-002, -3.451084e-003, 5.102172e-003, -2.890659e-003, 3.627372e-002, -9.021641e-003, -7.542128e-003, 1.919241e-002, -3.514034e-002, -1.522850e-002, -2.573270e-002, 4.592880e-003, 6.711287e-003, 1.272976e-003, -2.549430e-002, -1.387720e-002, -1.919535e-002, -8.416046e-003, 8.484968e-003, -1.091368e-002, 1.421124e-002, -1.091368e-002, 8.484968e-003, -8.416046e-003, 5.591094e-002, 4.224842e-002, 1.666459e-002, 3.425486e-002, -4.255006e-002, -1.807819e-002, -9.633617e-003, -2.564497e-002, 3.123729e-002, 3.295159e-002, -3.230002e-003, -1.151012e-002, 4.357463e-002, 8.774788e-002, 4.949231e-002, 3.896338e-002, -2.990462e-002, 1.058068e-002, -5.513258e-002, -9.166588e-002, -6.252356e-002, 3.568551e-002, -5.525082e-002, -6.012605e-002, -1.492348e-005, -1.944525e-002, 8.883389e-003, -1.512197e-002, -4.146438e-002, -1.512197e-002, 8.883389e-003, -1.944525e-002, 2.202198e-002, -1.324206e-002, 2.954423e-002, -3.162531e-002, -2.291456e-003, -3.548200e-002, -1.226231e-003, 4.019765e-002, -3.625002e-002, 4.878221e-002, 2.983989e-002, 9.893185e-002, -4.422863e-002, -6.655195e-002, -2.450299e-002, -1.910069e-002, -3.898280e-002, -5.644251e-002, 3.224164e-002, 2.560850e-002, -8.783239e-002, -2.957389e-002, -2.386213e-002, -2.119275e-002, 1.201178e-002, -9.146491e-004, -4.791001e-005, -6.788279e-003, 9.816812e-003, -6.788279e-003, -4.791001e-005, -9.146491e-004, 2.375503e-002, -1.364885e-002, -2.022440e-002, 1.645597e-002, 2.343697e-002, -6.169556e-002, -1.683007e-002, 7.041465e-004, -1.510927e-002, -4.400290e-002, -1.032285e-002, -6.248812e-003, -3.595691e-002, 2.393462e-002, -1.911561e-002, -5.058891e-002, 3.476987e-002, -1.714733e-002, -4.510522e-002, 1.814538e-002, -5.838134e-002, 8.838105e-002, -2.387207e-002, 6.956252e-003, 6.876050e-003, -3.064013e-003, -1.343752e-002, -4.530260e-004, 2.836467e-002, -4.530260e-004, -1.343752e-002, -3.064013e-003, 1.943394e-002, -2.112190e-002, -2.150463e-002, -5.009437e-002, 2.310115e-002, -4.279570e-003, -2.653841e-002, -9.225867e-004, -2.713670e-003, -3.812719e-002, -1.897907e-002, 8.767297e-003, -8.828935e-002, -4.511200e-002, -2.412814e-002, -6.938174e-002, 1.190658e-002, 2.758139e-003, 8.503458e-003, -3.147018e-002, -3.280611e-002, -2.931120e-002, 1.256879e-002, 4.010828e-003, 1.707765e-003, -1.609178e-002, 4.199191e-002, -1.609178e-002, -3.246556e-002, -1.227149e-002, 1.188660e-001, -3.413961e-002, -8.148029e-002, 7.133353e-002, -1.347341e-001, 7.133353e-002, -9.156066e-002, 2.883561e-001, 2.730155e-002, 7.110584e-002, -1.541110e-002, 3.590124e-002, 1.400193e-002, 3.590124e-002, -1.323552e-002, 2.789115e-001, 6.791314e-002, 1.757416e-001, 2.801065e-003, 2.337995e-002, 2.152054e-002, 2.337995e-002, 7.673183e-002, -1.634948e-001, -1.853126e-003, 1.236061e-001, 6.410232e-002, 1.654603e-002, 3.277128e-002, 1.654603e-002, -4.312764e-002, 2.673076e-002, -7.761875e-002, 2.797959e-002, -3.525147e-003, 3.179977e-002, 2.725199e-002, 3.179977e-002, -1.709747e-001, -6.699225e-003, -1.204351e-001, 3.368362e-003, -6.177253e-003, 4.063089e-002, 3.081969e-002, 4.063089e-002, -1.279933e-001, -2.496983e-002, 3.073665e-004, 1.090703e-001, 1.877236e-002, 3.376099e-002, 8.776747e-002, 3.376099e-002, -4.082004e-002, 1.514931e-002, 9.990400e-002, -1.076517e-002, -4.854081e-002, -6.107336e-005, -2.276273e-002, -6.107336e-005, -1.081247e-001, -7.766862e-002, 5.846530e-002, 2.730343e-001, 9.011335e-003, -1.244020e-002, 1.486405e-001, -1.244020e-002, 5.031557e-002, 4.424953e-002, -8.544001e-002, -1.812097e-001, 1.790124e-002, 3.112355e-002, -3.631061e-002, 3.112355e-002, 3.072389e-002, 2.127857e-003, 1.885434e-003, 8.123148e-003, -6.323001e-002, 1.431475e-002, -5.358482e-002, 1.431475e-002, 1.488215e-002, 2.095127e-001, 2.925090e-002, 2.856175e-002, 6.345822e-003, 2.530787e-002, -3.652452e-002, 2.530787e-002, -2.939294e-002, 1.316564e-001, -1.162319e-002, 1.509604e-002, 4.519543e-002, -2.180312e-002, -3.939172e-002, -2.180312e-002, 1.001668e-001, 7.546146e-002, 5.900869e-002, 7.294577e-002,


© ISO/IEC 2004 — All rights reserved

Copyright International Organization for Standardization
Provided by IHS under license with ISO
No reproduction or networking permitted without license from IHS
Not for Resale

3.491537e-002, -3.359540e-002, -3.791741e-002, -3.359540e-002, 7.354650e-002, 1.212130e-001, -1.832807e-001, 2.078869e-002, 1.728945e-002, 3.057099e-002, 3.475107e-003, 3.057099e-002, 2.167463e-002, 1.620645e-002, 2.358048e-001, 2.448390e-002}, {-8.598927e-004, -7.529084e-003, -2.289575e-003, 1.058363e-002, 1.477708e-002, -2.137376e-003, -4.163621e-003, -1.024262e-003, -5.664295e-003, -1.024262e-003, -4.163621e-003, -2.137376e-003, 1.477708e-002, 1.058363e-002, -2.289575e-003, -7.529084e-003, 1.508946e-002, 2.051900e-002, 3.736313e-003, -2.281615e-003, -3.785207e-003, -1.275451e-002, 6.083661e-003, 1.836084e-003, -3.329661e-003, -9.105368e-003, 3.109103e-003, 3.225354e-003, -3.161738e-003, -3.219671e-003, -1.067142e-002, -1.570619e-003, 8.812946e-004, -2.287028e-003, 5.641188e-003, 9.689127e-003, -7.991163e-003, -7.047724e-003, -2.038312e-003, 1.776200e-002, -2.958684e-002, -8.768982e-003, 4.388932e-003, -1.610281e-002, -2.629280e-002, -8.630633e-003, -1.074795e-002, -3.348633e-003, 7.922196e-003, -1.600349e-002, 1.671109e-002, 2.112598e-002, -7.742173e-003, 1.046476e-002, -1.919398e-003, 2.151956e-002, -1.055050e-003, 3.593914e-003, 1.174133e-002, 9.480421e-003, -9.753613e-003, 5.981935e-003, -2.860688e-003, -4.308291e-003, -6.297374e-004, -2.981284e-002, -3.679978e-003, -3.048189e-003, 1.302332e-002, -4.552244e-003, -2.472781e-002, -3.487637e-002, 1.473756e-002, 7.448073e-003, -1.307015e-002, -1.055666e-002, 2.836076e-002, -8.010014e-003, -2.446406e-002, 1.849393e-002, -2.471413e-003, -1.924424e-002, -2.056171e-002, -1.136616e-002, 3.237962e-002, 4.701419e-002, 2.412063e-002, -4.204893e-002, 2.505473e-003, 2.428873e-002, -1.311622e-002, -2.837324e-003, 2.758680e-002, 1.943311e-002, -1.293164e-002, -7.313434e-004, 1.927873e-002, -1.112837e-005, -2.766759e-002, 3.104189e-002, 4.792012e-002, 6.869578e-002, 1.180213e-003, -1.075507e-003, -1.919670e-002, 3.647162e-002, -3.844629e-002, 3.707133e-002, -8.505081e-003, 5.873672e-003, -1.313940e-002, -1.086554e-004, 1.211487e-003, -6.475890e-003, -4.047083e-002, -1.673827e-002, 4.185075e-003, -4.471432e-002, -2.605425e-002, 4.588285e-002, 1.512041e-002, 5.185162e-002, -3.976645e-003, -1.663358e-002, -5.628359e-003, 3.389008e-002, -2.039394e-002, -4.335319e-004, -1.227027e-002, 6.780654e-003, 1.303013e-002, 1.168532e-002, 3.550239e-002, 1.168532e-002, 1.303013e-002, 6.780654e-003, -4.235942e-003, -7.535490e-003, 1.310938e-002, -7.379080e-002, -3.039130e-003, 3.435487e-002, 2.887428e-002, 6.414227e-002, 5.413261e-002, 5.909966e-003, 4.546362e-002, 5.630696e-002, -1.697341e-002, -4.183439e-002, -4.025357e-002, -1.002295e-001, -2.691436e-002, -7.310461e-003, -2.771673e-002, 1.235252e-002, -4.507027e-003, -1.035352e-002, -5.068033e-002, -4.473038e-002, 3.478863e-003, 4.802383e-004, -4.965719e-003, 1.223083e-002, 4.104808e-003, 1.223083e-002, -4.965719e-003, 4.802383e-004, -5.638565e-002, 3.369838e-002, -1.169471e-003, 1.900057e-003, -3.308454e-002, -5.151323e-002, 3.485199e-002, 3.769463e-002, -7.990553e-003, -3.957329e-002, -2.496443e-002, 3.513838e-002, 1.753111e-002, -2.323042e-002, 4.728958e-002, 2.820741e-002, -2.218431e-002, -2.085987e-002, -1.010781e-001, -6.804532e-002, -2.338669e-002, -6.194053e-002, 6.320342e-002, -3.851900e-002, 9.692883e-003, 2.609131e-002, 1.376030e-002, 1.607240e-002, -4.986791e-003, 1.607240e-002, 1.376030e-002, 2.609131e-002, 3.007278e-002, 4.109411e-002, 8.033650e-003, 1.405456e-002, 5.580369e-002, -5.212444e-002, 4.026557e-002, -2.253942e-002, -6.878509e-002, -2.796739e-002, 4.593233e-002, -6.718850e-002, -4.585008e-002, 3.954411e-002, -1.228682e-001, 2.653149e-003, -1.028224e-002, -2.060151e-002, -1.235344e-001, 2.611810e-003, -3.756315e-002, 9.415767e-002, -1.057780e-001, 3.590815e-003, -1.761372e-003, 2.504804e-002, 2.606300e-003, 5.416993e-003, -1.365973e-002, 5.416993e-003, 2.606300e-003, 2.504804e-002, 4.108780e-002, 1.935497e-002, 1.721355e-002, -2.817994e-002, 1.952768e-005, 4.581839e-002, -4.131510e-002, 4.125198e-002, -6.778311e-002, -4.282314e-002, -3.531552e-002, 1.829728e-002, -7.209262e-002, 1.969233e-002, 5.823670e-002, -3.206623e-002, -2.786088e-002, -7.999802e-002, -1.634219e-002, 3.012880e-002, -4.165712e-003, -7.114014e-003, -1.011130e-002, -1.120494e-002, 3.203429e-002, -6.189850e-002, -7.312940e-003, -6.189850e-002, 5.127684e-002, -5.266282e-002, 4.453848e-002, -7.271729e-003, -2.165194e-002, -8.646398e-002, 3.029158e-002, -8.646398e-002, -1.305822e-001, 6.056894e-002, 3.150668e-002, -9.730670e-002, 6.878715e-002, -2.031716e-003, -6.781658e-002, -2.031716e-003, 1.065654e-001, -4.152608e-002, 4.521682e-002, 2.593034e-001, 5.675560e-003, -3.368757e-002, -3.262527e-002, -3.368757e-002, 1.476265e-001, -9.581197e-002, -3.445327e-002, -7.393149e-002, -7.540382e-003, -3.260049e-002, -1.590789e-002, -3.260049e-002, -5.812871e-002, -1.236673e-001, -2.270993e-002, -5.886712e-002, -1.511223e-002, 6.116253e-002, -2.068464e-001, 6.116253e-002, 2.707225e-002, 1.370243e-001, -1.649248e-001, 2.394273e-002, -4.784319e-002, 1.094775e-001, -2.858503e-002, 1.094775e-001, 2.352239e-003, 1.735288e-002, 1.021183e-001, 1.443515e-001, -2.314066e-002, 1.021501e-002, -5.286991e-002, 1.021501e-002, 8.379097e-003, 7.386182e-003, -1.268334e-001, -1.766984e-001, 9.171415e-003, -4.851510e-002, -5.518406e-002, -4.851510e-002, 1.289588e-002, 6.232768e-002, 3.484445e-002, -9.178620e-002, -7.102845e-002, 7.175198e-003, 5.581190e-004, 7.175198e-003, -5.194776e-002, -3.690813e-002, -3.842889e-002, -6.091728e-002, -8.109551e-002, -9.827201e-003, 1.408538e-002, -9.827201e-003, -1.103506e-001, 1.143331e-001, -6.341040e-002, -7.843482e-002, -1.396707e-003, -2.881251e-002, -1.891258e-002, -2.881251e-002, 3.405384e-003, -1.136807e-001, 1.065237e-002, 2.722362e-002, -3.496005e-002, -1.932105e-002, 4.268866e-002, -1.932105e-002, -2.572356e-002, -7.821105e-003, 3.393670e-002, 1.912615e-001, 1.065100e-001, -6.107845e-003, 7.734587e-002, -6.107845e-003, 5.319925e-002, 1.890193e-001, -1.145082e-002, 8.949140e-002,

© ISO/IEC 2004 — All rights reserved


Copyright International Organization for Standardization
Provided by IHS under license with ISO
No reproduction or networking permitted without license from IHS
Not for Resale

8.921877e-002, -4.011074e-002, 8.235142e-002, -4.011074e-002, 1.486648e-001, -1.767618e-002, -5.515748e-002, 2.168476e-001, -8.487926e-003, -9.125312e-003, 3.671418e-002, -9.125312e-003, 1.008483e-001, 2.587736e-002, 1.305020e-001, -1.839667e-003},
{2.214173e-003, -2.012261e-003, -3.074647e-003, -2.375174e-003, -5.082850e-003, -2.197665e-003, 7.735402e-004, 2.521677e-003, 7.640138e-003, 2.521677e-003, 7.735402e-004, -2.197665e-003, -5.082850e-003, -2.375174e-003, -3.074647e-003, -2.012261e-003, 3.061086e-002, 4.981293e-003, -2.150776e-003, -2.177014e-003, 9.862105e-003, -3.044343e-003, -2.157249e-004, 7.757118e-003, 1.053803e-003, -1.839722e-002, 1.781656e-003, 5.518099e-003, -1.085589e-004, 1.225652e-004, 1.386379e-002, 1.532638e-002, -2.439212e-002, -7.525156e-003, -1.100002e-002, -7.974783e-003, -8.763993e-003, -1.155685e-002, -7.604598e-003, 1.448247e-002, 1.257076e-002, -2.808006e-002, 1.655026e-002, 7.154677e-003, 1.145073e-002, -1.219404e-002, -1.322466e-002, 2.799490e-002, 4.813010e-003, 7.271903e-003, -7.326716e-003, -9.118413e-003, 1.094656e-002, -1.054554e-002, -2.111443e-002, -1.710126e-002, 5.303050e-004, -1.753979e-002, 3.417593e-003, -4.247770e-003, 7.612977e-003, 1.474263e-002, -3.811597e-003, 1.245004e-002, 4.514355e-004, -9.262149e-003, -2.943614e-003, -2.054358e-002, 1.733546e-002, -3.028564e-003, -2.025801e-002, -2.925490e-002, 1.239220e-002, -1.291563e-002, 4.719656e-002, 1.591243e-002, 2.921931e-002, -4.339914e-003, -6.492018e-003, -1.245944e-002, -1.271697e-002, -1.138660e-003, -7.206056e-003, -9.538373e-004, 2.600417e-002, -1.379468e-002, -1.548000e-002, -4.724175e-002, 9.870089e-003, -5.619068e-005, -2.011749e-002, 1.493843e-002, 3.512631e-002, 7.490330e-003, -1.901311e-002, 4.547794e-003, 2.458545e-003, 1.020419e-002, -1.671644e-004, -2.482927e-002, 7.430859e-004, 3.573378e-002, 8.465675e-003, -3.385331e-002, -3.733547e-002, -1.488634e-002, 9.473761e-003, -1.507306e-002, -2.296039e-003, -8.466901e-003, -1.286071e-002, 1.184976e-002, -1.462672e-002, -4.144955e-003, -1.227695e-002, -8.997893e-003, -4.053298e-002, 7.214410e-003, -3.038729e-003, -3.363655e-002, -3.641373e-002, 4.850384e-003, -3.142640e-002, -1.281701e-002, -3.713529e-002, -3.808833e-002, -2.483195e-002, -1.027684e-002, 2.350190e-002, 1.092291e-002, 1.401168e-002, -7.020652e-004, 2.893957e-002, -7.020652e-004, 1.401168e-002, 1.092291e-002, 5.411534e-002, 4.591174e-002, 9.762561e-004, -1.741516e-002, 2.682486e-003, -4.405442e-002, -1.103421e-002, -6.649737e-002, -1.032834e-002, -3.523209e-002, -8.142585e-003, -5.680536e-003, -3.259179e-003, -5.864409e-002, -3.032424e-002, 2.766627e-002, -7.744780e-003, -1.263007e-002, -5.080829e-002, 1.574346e-002, -9.132386e-002, -1.008380e-001, -6.668701e-002, -2.326752e-002, 7.534519e-003, 1.268781e-002, 2.225818e-002, -3.652578e-004, 8.156310e-002, -3.652578e-004, 2.225818e-002, 1.268781e-002, 3.183726e-002, -3.125205e-002, -5.177421e-002, -9.921714e-003, 1.350658e-002, 1.216354e-002, -2.850450e-003, 2.797234e-002, 2.021812e-002, 5.309249e-002, -1.094520e-002, -6.739302e-002, -1.173064e-001, 2.812010e-002, 7.307158e-003, 1.498376e-002, 3.182115e-002, -1.027354e-002, -8.165042e-002, -5.781006e-002, 1.650259e-003, -6.170350e-002, -6.268208e-002, 4.062117e-002, -1.911494e-002, -2.648459e-003, 1.817500e-002, -1.207838e-002, -5.102156e-002, -1.207838e-002, 1.817500e-002, -2.648459e-003, 2.438660e-002, 3.272505e-003, 1.800329e-002, -7.016982e-003, -3.959271e-002, 6.889534e-002, -5.696268e-002, 1.213592e-002, -3.213989e-002, -8.719595e-003, -9.413377e-003, 1.188710e-003, 6.511371e-003, 4.366051e-002, -4.125195e-002, -8.294376e-002, -3.922939e-002, -5.787367e-002, -5.600497e-002, 1.156284e-002, -5.375730e-002, 5.678978e-002, -1.149376e-002, -7.434820e-002, -9.707308e-003, 3.653708e-003, -1.151732e-002, -1.221540e-002, 2.962048e-002, -1.221540e-002, -1.151732e-002, 3.653708e-003, 2.837477e-002, -1.661892e-003, 1.239153e-002, -1.641281e-002, 1.991506e-002, -1.904069e-002, 1.536827e-002, 1.926052e-002, -7.345630e-003, -6.847934e-002, -1.563261e-002, -6.108632e-003, 7.585489e-002, 1.425021e-002, 3.345523e-002, 1.340232e-002, 5.913874e-003, -5.362189e-002, -5.807826e-002, 1.253638e-002, -1.404101e-001, 2.329982e-002, -7.354738e-004, -6.455123e-002, 3.519502e-002, -6.714943e-003, 3.107772e-003, -6.714943e-003, -3.011975e-002, 3.611330e-002, 5.695261e-002, 1.056202e-001, 3.551422e-002, 7.894472e-002, 2.477624e-001, 7.894472e-002, 3.541443e-002, 1.601324e-001, 4.566628e-002, -7.754808e-002, -6.072262e-003, 1.127628e-001, 1.751390e-001, 1.127628e-001, -2.490306e-002, -1.814247e-001, 4.047059e-004, 2.716155e-002, 1.858964e-003, -6.258658e-002, -1.383523e-001, -6.258658e-002, 7.031050e-002, 1.218419e-001, 1.661566e-001, 2.166258e-002, -2.710412e-002, -8.110345e-003, -4.359145e-002, -8.110345e-003, -1.826031e-002, 1.384819e-002, -6.883428e-002, 1.094450e-001, -2.010322e-002, 7.206511e-003, 8.856372e-002, 7.206511e-003, -7.913672e-003, -1.033089e-001, 1.201472e-002, -2.363504e-002, -2.275602e-002, 2.704611e-002, -1.447898e-001, 2.704611e-002, -7.630424e-002, -1.217906e-001, -2.625636e-001, 2.765471e-002, 3.450384e-002, -1.111628e-002, -6.806791e-002, -1.111628e-002, -4.531079e-002, 4.496640e-002, 1.601001e-001, -2.554358e-002, -7.149442e-003, 1.844285e-002, 5.064580e-002, 1.844285e-002, -1.053946e-001, 8.006751e-002, 1.456333e-002, 3.384385e-002, -1.439836e-002, -3.121358e-002, -9.186762e-002, -3.121358e-002, -3.852677e-002, -6.631067e-002, 3.435097e-003, 3.353565e-003, -3.653936e-002, -1.963492e-002, 8.483737e-002, -1.963492e-002, -3.566284e-003, -1.340755e-001, -6.752066e-002, -1.733538e-001, -3.184768e-002, 2.697674e-002, -1.410225e-002, 2.697674e-002, -1.182205e-001, -1.461578e-001, 4.561534e-002, 5.162263e-002, 1.858218e-002, -1.810202e-002, -1.761344e-002, -1.810202e-002, 4.182774e-002, 5.054187e-002, -7.648296e-002, 4.523997e-002, -1.614931e-002, -2.619539e-002, 2.787620e-002, -2.619539e-002, -7.340739e-003, 3.574102e-002, 2.147381e-003, 8.636289e-002,


© ISO/IEC 2004 — All rights reserved

Copyright International Organization for Standardization
Provided by IHS under license with ISO
No reproduction or networking permitted without license from IHS
Not for Resale

3.679728e-002, 1.854919e-002, -1.593625e-001, 1.854919e-002, -4.363917e-002, 1.599946e-001, -1.031561e-001, -1.425780e-001, 2.188246e-002, 1.068035e-002, -1.366137e-002, 1.068035e-002, -5.770607e-002, 6.724312e-002, 1.315291e-001, -6.874157e-002}, {-4.993662e-004, 1.544740e-003, -8.153717e-005, -9.865213e-004, 8.448959e-004, 3.763435e-003, -1.188891e-003, 8.566328e-004, -2.152188e-004, 8.566328e-004, -1.188891e-003, 3.763435e-003, 8.448959e-004, -9.865213e-004, -8.153717e-005, 1.544740e-003, 1.713279e-003, -5.959113e-003, 2.080650e-002, 2.470186e-002, -8.176088e-003, -8.763881e-003, 1.451391e-002, 2.536807e-003, -4.377118e-004, -1.823217e-003, 1.141522e-002, 1.615940e-002, 2.405470e-003, 1.450572e-002, 5.190687e-003, 6.337757e-003, -2.877457e-002, -3.398403e-002, -1.001203e-004, 2.139874e-003, -1.306228e-002, 4.760463e-003, 2.179058e-002, 1.331291e-002, 2.805804e-003, 1.748197e-003, -1.926566e-002, 4.538342e-003, -1.570297e-002, -1.683457e-003, -1.328111e-002, -4.089663e-002, -4.826258e-003, 3.417853e-003, 1.036767e-002, -1.117259e-002, -3.132653e-002, -8.424253e-003, 1.637307e-002, -1.940161e-002, -2.137242e-002, -5.713352e-003, 3.133537e-002, -6.370384e-003, -2.740847e-003, 2.095377e-002, 1.139315e-002, -2.002270e-003, 6.048840e-003, 1.299199e-002, 1.037831e-002, 5.994636e-003, 3.234034e-002, 1.692478e-002, 3.574375e-002, -1.581209e-002, -2.285116e-002, 5.131817e-003, 1.622901e-002, 6.260500e-003, 9.867662e-003, 3.019236e-003, -1.189624e-002, 4.872710e-003, 7.119679e-003, 2.624496e-003, -2.673332e-002, 2.299139e-002, 9.927648e-003, 4.445164e-002, 1.598877e-002, 1.668758e-002, 1.015931e-002, 3.088266e-002, -3.967430e-002, 1.849508e-002, 3.146846e-003, -1.229558e-002, -2.666206e-002, 6.554935e-003, -1.329373e-002, 7.246825e-004, -5.633451e-003, 7.972487e-003, 4.428538e-002, 2.089102e-002, -1.516798e-002, 1.235459e-003, 1.239115e-003, 9.295258e-004, -1.496412e-002, -6.376638e-003, 5.555785e-003, -1.018939e-002, -1.885376e-002, -6.962521e-003, 9.414489e-003, -5.571775e-003, 7.845576e-003, 1.542794e-002, -3.705791e-004, -4.857715e-003, -1.677813e-002, 4.008012e-003, 1.621456e-002, -3.147734e-002, -2.265565e-002, -3.652612e-003, -1.232420e-002, -3.537246e-003, 5.473128e-005, 3.419692e-003, -5.938659e-003, 5.061958e-003, 1.724521e-003, -2.294905e-003, 6.545195e-002, -2.294905e-003, 1.724521e-003, 5.061958e-003, 8.043995e-003, -3.550077e-002, 5.254804e-002, -2.348500e-002, 7.346693e-003, 4.218470e-002, 5.956170e-002, 1.813379e-002, 3.389698e-002, -8.925909e-003, 9.883849e-004, -1.554211e-002, 8.575382e-003, 6.777139e-002, -3.991481e-003, -6.336933e-003, 8.194543e-002, -3.117965e-002, -1.640801e-002, 1.761550e-002, 2.142789e-002, -1.051340e-001, -1.140727e-001, -7.638398e-002, 3.621404e-003, 6.189917e-003, -4.409627e-004, -1.006908e-002, 1.769361e-002, -1.006908e-002, -4.409627e-004, 6.189917e-003, -5.890256e-003, 9.110393e-004, 2.695224e-002, -3.045641e-003, 2.676442e-002, -1.595431e-002, 2.495182e-002, -8.346649e-003, -1.650935e-002, 2.251020e-003, -8.281601e-002, -2.373535e-002, 4.683166e-002, 3.867704e-002, 4.442259e-003, 4.107306e-002, 1.263595e-001, -9.576456e-002, -8.556900e-002, -3.704190e-002, 9.392860e-002, 4.007047e-002, 1.585662e-002, 7.502986e-003, 2.924082e-003, -4.828374e-003, -1.365034e-003, 4.823941e-003, 3.094946e-002, 4.823941e-003, -1.365034e-003, -4.828374e-003, 1.058457e-002, -2.503227e-002, 1.837091e-002, 2.549531e-002, 3.006117e-002, -5.406160e-002, 6.469879e-002, 1.349176e-002, 3.587904e-002, -4.209859e-002, 3.696263e-002, -2.772859e-002, -3.862885e-002, 1.985058e-002, -6.936281e-003, -3.457754e-002, -1.417258e-002, -3.084934e-002, 1.674315e-002, -6.250327e-004, 1.123527e-002, -4.302902e-002, -6.257142e-003, 1.518249e-002, -1.106193e-003, -4.827404e-003, -5.757840e-003, 1.053974e-002, 5.206928e-002, 1.053974e-002, -5.757840e-003, -4.827404e-003, 5.346799e-002, -2.379223e-002, 5.053991e-002, 2.206247e-002, 5.574258e-002, -3.409233e-002, -7.745239e-003, -3.516708e-002, 2.610724e-003, 1.505460e-002, 5.300012e-002, 1.112379e-003, -2.784644e-002, 5.070022e-002, 7.318065e-003, -3.218057e-002, -4.202903e-002, 1.923383e-002, 5.166603e-002, -3.230917e-002, -5.755371e-002, 3.355821e-002, 5.790052e-002, -4.593488e-002, 3.060527e-002, -2.231953e-002, -3.186737e-002, -2.231953e-002, -1.134459e-001, 4.793567e-002, -1.163764e-001, -1.102071e-001, -2.851122e-003, 2.035005e-002, -2.293982e-002, 2.035005e-002, 1.229887e-001, -2.825543e-002, 2.984298e-002, 1.018418e-001, 5.561809e-002, 2.278456e-002, -1.285157e-001, 2.278456e-002, 8.263937e-002, 7.064028e-002, 5.499737e-002, 1.592517e-001, 1.751988e-002, -1.059434e-002, 5.546602e-002, -1.059434e-002, -1.173506e-001, -1.697087e-001, 4.327085e-002, -4.496828e-002, -1.343914e-002, 1.942493e-002, -5.538718e-002, 1.942493e-002, -1.263819e-001, -3.840197e-002, -1.678356e-002, 1.205265e-001, -2.025367e-002, 4.552129e-003, -1.293075e-001, 4.552129e-003, -2.107878e-001, -2.340231e-002, -4.711609e-002, -2.350488e-001, -2.978553e-002, 3.426859e-004, -8.596370e-002, 3.426859e-004, -8.791693e-002, -2.482065e-001, -2.696985e-002, -1.775578e-001, -3.973104e-002, 9.375658e-003, -4.515876e-002, 9.375658e-003, -1.618936e-001, 5.675666e-002, 2.397267e-003, 9.203214e-002, -9.239244e-003, 1.361672e-003, -3.375114e-002, 1.361672e-003, 4.670495e-002, 4.221161e-002, 5.814339e-002, -1.530038e-001, 4.812336e-002, -2.019327e-002, 1.239570e-001, -2.019327e-002, 1.346501e-001, -8.326953e-003, 1.947080e-002, 1.730058e-001, 1.675879e-002, 5.920245e-002, -1.103566e-001, 5.920245e-002, 9.557691e-002, 1.236511e-001, -1.340965e-002, -5.156334e-003, 9.756474e-004, 1.719280e-003, -5.556714e-002, 1.719280e-003, 2.227690e-002, -1.933023e-001, -2.990933e-002, -3.262334e-002, -1.952086e-003, 1.029219e-002, 1.483068e-002, 1.029219e-002, -1.073166e-001, 9.699963e-002, 8.001416e-002, 8.851297e-002, -3.400795e-002, -1.155499e-002, 3.324661e-003, -1.155499e-002, -7.483480e-002, -6.127307e-002, -1.513786e-001, -4.090943e-002, -

© ISO/IEC 2004 — All rights reserved


Copyright International Organization for Standardization
Provided by IHS under license with ISO
No reproduction or networking permitted without license from IHS
Not for Resale

2.040811e-002, -1.013003e-002, -1.225195e-002, -1.013003e-002, -4.398142e-003, -2.331730e-002, 1.882083e-002, 1.682358e-002, 1.567485e-003, 1.204321e-002, 2.297525e-002, 1.204321e-002, -9.375868e-003, 8.564983e-002, 1.544579e-001, -8.109077e-002}, {1.303734e-003, -3.672902e-003, -1.682958e-003, -1.926233e-003, 4.438315e-003, 2.969117e-003, -1.094562e-002, -1.481995e-003, 7.329140e-003, -1.481995e-003, -1.094562e-002, 2.969117e-003, 4.438315e-003, -1.926233e-003, -1.682958e-003, -3.672902e-003, 1.085736e-002, -1.943809e-003, -6.364171e-003, -4.475791e-005, -8.481126e-003, -9.140636e-003, 7.936166e-003, 3.825308e-005, 4.630149e-003, 7.655719e-003, -1.244515e-002, -1.234415e-002, -2.370643e-003, 1.206762e-002, 5.460687e-003, -6.218197e-003, -2.727857e-002, -1.536421e-002, -2.539129e-002, -2.097801e-003, 4.265357e-003, 1.397905e-002, -9.048968e-003, 1.470758e-003, 2.250880e-002, -1.231610e-002, -1.446246e-002, 1.854063e-002, 4.158328e-003, 2.106741e-003, -9.719351e-003, 3.256798e-003, -1.827338e-002, -9.170390e-003, -1.075811e-002, -1.388817e-002, 6.133133e-003, 1.638210e-002, -2.000897e-002, 1.646869e-002, 2.879016e-003, -2.456713e-002, -1.907609e-002, 1.671653e-002, -8.597238e-003, -9.920883e-003, -2.524655e-002, -4.439622e-003, -9.690168e-004, -5.441025e-003, 4.694540e-004, -2.168276e-003, 4.342716e-003, 2.792108e-002, -2.723636e-004, -1.446772e-002, -1.489009e-002, -1.005119e-002, 2.060175e-002, -1.571498e-002, -1.531527e-002, 4.931505e-003, 1.306721e-002, 1.683832e-002, 1.426122e-002, -5.064423e-003, 1.815917e-004, -4.865925e-003, -9.643989e-003, 9.910331e-003, 1.178649e-002, 4.960615e-003, -5.848472e-003, -6.249204e-003, 2.618505e-002, -4.129174e-003, 5.312095e-003, 3.560682e-002, 1.617106e-002, 6.529937e-003, -9.710563e-003, -3.578449e-004, -5.080710e-003, -1.808089e-003, 3.643857e-003, -3.632271e-002, 2.991314e-002, 1.913130e-002, -1.756357e-002, -1.936636e-002, 1.370118e-002, 2.521111e-003, -2.983530e-002, 1.316635e-002, -6.223058e-003, -2.493003e-002, 5.650379e-003, -3.451313e-003, 1.287731e-002, 9.257126e-003, 2.993717e-002, -1.516961e-002, 2.365030e-002, 4.809293e-002, 2.115893e-002, -1.900837e-002, -1.248120e-002, -1.731594e-002, 9.323413e-003, 1.707726e-002, -1.430920e-002, -3.007016e-002, -2.204988e-003, -2.439858e-003, -1.214361e-002, 7.165983e-003, 6.110705e-003, 7.165983e-003, -1.214361e-002, -2.439858e-003, 3.192178e-002, -1.249196e-002, -2.895316e-003, -1.820200e-002, 5.065132e-002, -5.914674e-002, -4.410402e-002, -5.353833e-002, -2.805113e-002, 1.008923e-002, 1.994680e-002, 5.586385e-003, -5.207252e-002, -1.350039e-002, -3.867246e-002, 5.184032e-003, -6.206206e-002, 4.926548e-003, -8.289282e-003, -5.872546e-002, -1.121795e-001, -6.433667e-003, 1.002630e-001, -1.523520e-002, -3.591328e-003, -7.017391e-003, -1.309595e-002, 1.933644e-002, -8.499859e-003, 1.933644e-002, -1.309595e-002, -7.017391e-003, -4.946560e-002, -8.158445e-003, 3.502161e-002, -4.062838e-002, 8.180306e-003, 9.747213e-003, -3.578099e-002, -6.509731e-002, -1.798045e-002, 1.734223e-002, 3.087152e-002, -8.433687e-002, -6.345880e-002, 1.341281e-002, 7.408744e-004, 4.668701e-003, -4.097261e-002, 1.307690e-002, -1.280934e-002, 4.012241e-002, 8.102949e-002, -9.702976e-003, 1.353767e-002, 1.668723e-003, 2.569896e-003, 3.352004e-003, 1.510274e-002, -4.405184e-004, -2.807451e-002, -4.405184e-004, 1.510274e-002, 3.352004e-003, 4.396018e-002, -5.018346e-003, 3.828224e-002, -1.025729e-002, 4.741487e-002, -1.992151e-002, -1.252951e-002, -1.901224e-002, 1.007234e-001, 1.456318e-002, -3.301367e-002, -1.508815e-002, -8.382092e-003, 4.765552e-002, 8.867743e-002, 2.225637e-002, 1.232541e-002, -3.737272e-002, -3.358043e-003, 1.054394e-002, -5.107512e-002, 2.084782e-002, 3.832117e-002, 2.002481e-002, 4.530155e-003, -2.316067e-003, 8.767976e-003, 1.316308e-002, -3.593374e-002, 1.316308e-002, 8.767976e-003, -2.316067e-003, 5.421625e-002, -4.633242e-003, -3.113326e-002, 3.778557e-002, -3.257774e-002, -9.321806e-004, -6.060256e-003, 1.488848e-002, 4.750534e-002, 5.343885e-003, 6.531028e-002, -2.047005e-002, 2.040993e-002, -2.347502e-002, -6.668257e-002, 4.816104e-003, 1.748060e-002, 2.693237e-002, -7.261349e-004, 1.332348e-002, -3.405109e-002, -7.906673e-003, -6.982009e-003, -5.636173e-003, -5.657792e-002, -5.338335e-002, 1.408286e-002, -5.338335e-002, 2.371497e-002, -1.106298e-001, -1.637986e-001, 1.853912e-002, 3.513811e-002, 4.982236e-002, -1.777026e-001, 4.982236e-002, -3.706144e-002, 5.024103e-002, -3.984249e-002, 4.108500e-002, 4.500284e-002, 2.491590e-002, 1.849271e-001, 2.491590e-002, -1.402354e-001, 3.120069e-001, 6.452711e-002, 3.285345e-002, -8.280831e-003, -2.084804e-002, -7.120992e-002, -2.084804e-002, 2.816812e-002, 8.721393e-004, -9.668749e-002, 4.300067e-002, 7.657356e-002, 4.443187e-002, 2.085164e-002, 4.443187e-002, 2.337432e-002, 2.407758e-002, -6.475881e-002, -3.519176e-002, -5.733873e-002, 8.111980e-002, 3.147543e-002, 8.111980e-002, 4.663652e-002, 1.124281e-002, 1.657924e-001, 2.458304e-001, -7.117203e-002, 1.225275e-001, 7.146774e-003, 1.225275e-001, 7.763118e-002, 1.261257e-001, 8.270070e-002, 1.374104e-001, 3.085870e-002, 2.539357e-002, -8.329373e-003, 2.539357e-002, -7.339440e-002, -2.071253e-001, 8.204451e-002, 1.632010e-002, -2.222201e-002, -2.561137e-002, 2.251894e-002, -2.561137e-002, -4.407177e-002, -5.754706e-002, -1.137111e-001, 1.775564e-001, 3.422327e-002, 3.309778e-002, 1.563590e-001, 3.309778e-002, 7.344213e-002, 9.350161e-002, 8.569934e-002, 2.276607e-001, 1.449118e-002, -1.192238e-003, -1.496995e-002, -1.192238e-003, 2.613243e-002, -1.777830e-002, -4.168293e-003, 3.933224e-002, -1.189628e-002, 4.196318e-003, 3.292834e-002, 4.196318e-003, 5.461173e-002, 2.928134e-002, 1.205906e-004, -1.836071e-002, 6.395004e-003, -1.116883e-002, -1.241662e-002, -1.116883e-002, -6.423245e-003, 1.427898e-003, 2.617315e-002, -1.107592e-001, -1.582637e-002, 3.307635e-003, -6.082978e-002, 3.307635e-003, -1.125869e-001, -1.148073e-001, 1.167943e-001, -1.342287e-002, -


© ISO/IEC 2004 — All rights reserved

Copyright International Organization for Standardization
Provided by IHS under license with ISO
No reproduction or networking permitted without license from IHS
Not for Resale

1.037132e-002, 3.819203e-002, -1.468329e-001, 3.819203e-002, -9.824553e-002, 8.635619e-002, -8.344624e-003, -1.150398e-001, 1.230656e-002, -2.255668e-002, -3.476762e-002, -2.255668e-002, -2.607228e-002, -8.586650e-002, -7.264674e-002, 5.019461e-002}, {-1.415038e-003, -2.026959e-003, -3.661746e-003, 3.925402e-003, 4.949494e-003, -2.852199e-003, -5.272322e-003, 4.081560e-003, -1.540135e-002, 4.081560e-003, -5.272322e-003, -2.852199e-003, 4.949494e-003, 3.925402e-003, -3.661746e-003, -2.026959e-003, -1.445089e-002, -5.807654e-003, 1.562997e-002, 1.364550e-003, 3.153979e-003, -4.131032e-003, -2.194776e-002, 1.759631e-002, -2.582598e-002, 6.811188e-003, -6.138947e-003, 4.571028e-003, 1.845128e-003, -3.578598e-004, 5.589714e-003, 1.087886e-004, -1.402418e-002, -1.676420e-002, -2.037172e-002, 1.144322e-002, -9.919744e-004, -1.473595e-002, -1.798814e-002, -3.060695e-002, -1.289912e-002, 1.349167e-002, -1.333735e-002, -9.089013e-004, -7.334114e-003, -3.123782e-003, -2.445422e-002, 7.903151e-004, 1.321433e-002, -2.237148e-002, 1.406595e-002, 1.951017e-002, 8.881127e-003, -3.058573e-002, -1.817616e-003, 1.523035e-002, 3.224401e-002, -1.514956e-004, 1.330873e-002, -1.883190e-003, -7.251835e-003, 1.930283e-002, 3.184537e-003, 1.158926e-002, -2.585310e-002, -4.618783e-003, 1.945887e-002, 2.370757e-003, 2.585553e-003, 1.871271e-002, 3.032019e-002, 1.804164e-002, -9.352012e-003, -4.407092e-002, 8.212609e-003, 1.246547e-003, -1.747696e-002, -1.078441e-002, 1.541475e-002, -9.961749e-005, -1.229282e-002, -1.925482e-002, -2.116426e-002, -2.324709e-002, -6.556117e-003, -1.542259e-002, -3.977541e-003, -2.708058e-002, -8.376816e-003, -2.624086e-002, 7.079871e-003, 1.677657e-002, -4.209334e-003, -6.817641e-003, -1.323429e-003, 6.063520e-003, -9.891428e-003, 5.716708e-003, -2.033270e-002, -1.182548e-002, 1.079445e-002, 3.425451e-002, 3.591006e-003, -1.227190e-002, -3.802046e-002, -2.411174e-002, -1.156423e-002, -1.386551e-003, -6.400796e-003, 2.614307e-002, 8.108246e-003, 3.734993e-004, 2.508097e-003, 2.398892e-003, -2.064381e-002, -1.031601e-002, -1.807373e-004, -1.420992e-002, 4.115198e-003, 3.181925e-002, -1.177357e-002, 1.774630e-002, -2.082173e-002, -1.470083e-002, 1.808325e-002, 1.202100e-002, 1.814628e-002, -1.930724e-002, -7.595280e-003, -7.226657e-003, 8.140190e-004, 1.309288e-002, -2.722747e-002, 1.309288e-002, 8.140190e-004, -7.226657e-003, 4.659477e-002, 1.869012e-002, 1.818812e-002, -1.261780e-002, 5.478543e-003, -1.440678e-002, -2.414584e-002, -2.122858e-002, 1.880239e-002, -7.289692e-003, 5.105214e-003, -4.550248e-002, -3.283723e-002, -5.537203e-002, 5.657186e-002, -1.074728e-002, 5.122172e-002, 2.153955e-002, 9.883312e-003, 2.510507e-003, -3.969042e-002, -3.530028e-002, 5.701999e-002, -7.145184e-002, 2.441160e-003, -3.156609e-002, 9.607401e-003, -7.634264e-003, 3.978880e-002, -7.634264e-003, 9.607401e-003, -3.156609e-002, -8.481059e-003, -2.897337e-002, -3.455395e-002, 1.745638e-002, 2.488963e-002, -2.601871e-002, 5.819332e-002, 6.004336e-003, 1.046482e-002, 1.729342e-002, -4.433996e-002, 1.666188e-002, -7.884510e-003, 3.567596e-002, 4.062071e-002, -1.190195e-002, 1.104029e-001, -3.824207e-002, -9.420583e-002, 7.183988e-003, -5.693920e-002, 5.751841e-002, -4.410358e-003, -9.308346e-003, 4.115638e-003, 1.301943e-002, -7.062464e-003, -4.335459e-003, -4.996785e-003, -4.335459e-003, -7.062464e-003, 1.301943e-002, -2.366735e-002, 1.685061e-002, 4.309190e-002, 3.300940e-002, 1.260944e-002, -3.292788e-002, -1.636951e-002, 2.555146e-003, 3.281531e-002, -5.843512e-002, -3.721778e-003, -5.734759e-003, 3.706337e-002, 4.510387e-002, -1.034127e-002, -3.876033e-002, 1.053944e-002, -1.297086e-002, 4.448968e-003, -3.291147e-003, -2.673819e-002, 7.236886e-002, -2.351474e-002, 2.972775e-002, -3.765566e-004, 1.985771e-002, -7.842584e-003, -3.475435e-004, 5.099315e-003, -3.475435e-004, -7.842584e-003, 1.985771e-002, -2.276039e-002, 1.190306e-002, 3.669437e-003, -3.310965e-003, -9.353262e-003, 3.006831e-002, 3.587823e-003, 2.382261e-002, -4.695174e-004, -4.769664e-002, -1.418909e-002, -5.755053e-003, 3.643590e-002, 1.038571e-002, -1.148443e-002, -4.223760e-002, -3.608668e-002, 2.106325e-002, -1.460340e-002, 4.462609e-002, -9.690030e-002, -3.441976e-002, 2.409373e-002, -3.722287e-002, -2.523809e-002, 1.795107e-002, 3.140291e-002, 1.795107e-002, -9.408945e-002, 2.988849e-002, 2.961682e-002, -1.066122e-001, 3.720270e-002, -6.502122e-002, -1.872357e-001, -6.502122e-002, 1.257927e-001, 4.721257e-003, -5.374942e-002, -2.730195e-001, -2.955025e-002, 6.650797e-002, 1.090424e-001, 6.650797e-002, 4.030824e-002, 1.325205e-001, 5.658083e-002, 2.290720e-001, 4.656569e-002, 4.775237e-002, 2.941218e-003, 4.775237e-002, -1.196577e-001, -1.501896e-001, 9.386450e-003, -5.062382e-002, 5.859888e-004, -2.006663e-003, 3.368310e-002, -2.006663e-003, 1.889887e-002, 8.911791e-002, -4.867238e-003, 4.760635e-002, -2.014587e-002, 1.262074e-002, 5.070635e-002, 1.262074e-002, 1.018681e-001, -2.731729e-002, 2.244842e-001, 5.956928e-002, 1.597326e-002, 2.624266e-003, -1.014559e-001, 2.624266e-003, 9.749883e-003, 5.726525e-002, 1.806692e-001, 7.543641e-002, -3.054754e-002, 1.947097e-003, -3.894499e-002, 1.947097e-003, 7.509837e-003, 6.211325e-002, -9.308345e-003, -1.802630e-002, -5.276103e-002, -1.033293e-002, 5.936785e-003, -1.033293e-002, 4.332517e-002, 5.861459e-002, 8.416882e-002, -1.578661e-001, 9.001477e-002, -4.508822e-003, 1.168540e-001, -4.508822e-003, -1.211787e-001, 7.839703e-002, 2.406071e-002, -7.460591e-003, 7.911330e-002, -9.328041e-003, 1.552853e-001, -9.328041e-003, -3.777066e-002, -7.480936e-002, 2.331559e-002, 1.296713e-001, -4.387102e-002, -2.255279e-002, 4.710495e-002, -2.255279e-002, 6.352057e-002, -8.592369e-002, -4.982311e-003, -4.725670e-002, 4.826018e-002, 2.373323e-003, 1.431119e-002, 2.373323e-003, 4.350826e-002, -3.821228e-002, -1.925090e-001, 4.916799e-003, -8.139828e-002, 1.892938e-002, 2.840156e-001, 1.892938e-002, 7.056701e-002, 5.419232e-002, -9.317908e-002, 4.474229e-002, -

© ISO/IEC 2004 — All rights reserved


Copyright International Organization for Standardization
Provided by IHS under license with ISO
No reproduction or networking permitted without license from IHS
Not for Resale

5.787024e-002, 2.595701e-003, 1.351733e-001, 2.595701e-003, 2.471090e-002, 1.834263e-001, -1.695986e-001, -1.913590e-003, 2.225141e-002, -3.684030e-003, 4.216127e-003, -3.684030e-003, 1.254483e-002, 7.697466e-004, -3.317927e-002, -9.425354e-002}, {9.246691e-004, -5.793073e-003, 9.945898e-003, 5.679182e-004, 4.699903e-003, -4.337529e-003, -4.751113e-003, 2.090545e-003, -3.086421e-004, 2.090545e-003, -4.751113e-003, -4.337529e-003, 4.699903e-003, 5.679182e-004, 9.945898e-003, -5.793073e-003, 7.401602e-003, -7.495739e-003, -4.297185e-003, 1.414404e-002, -4.080026e-003, -6.866752e-003, -2.713499e-003, 9.473468e-003, 3.541475e-003, 1.097502e-002, -5.965851e-003, -1.174676e-002, 3.088431e-003, 1.398264e-002, -1.451283e-003, -1.307731e-003, -4.461934e-003, 1.158523e-002, -2.361994e-002, -4.311948e-003, 4.609950e-003, -9.199600e-003, 9.537344e-004, 2.902362e-004, 6.518759e-003, 3.776400e-003, -2.798050e-002, -1.643346e-003, 1.263189e-002, -1.054653e-002, -2.084299e-002, -1.229633e-002, -5.752617e-003, 5.628846e-003, 6.667439e-003, -2.257832e-003, -9.979922e-003, -9.903121e-003, -7.023270e-003, 1.373868e-002, -1.863758e-002, -1.213097e-003, -9.880915e-003, 1.321280e-002, -4.973691e-003, -2.201078e-002, -1.341249e-002, 3.712583e-003, -7.161842e-003, 1.305018e-002, 1.852765e-003, -7.623182e-003, -2.537097e-002, 1.441797e-003, 1.223516e-002, 1.446786e-002, -1.004481e-002, 8.391192e-003, -4.962712e-003, -1.400720e-002, -1.918921e-002, -1.523360e-002, -4.035645e-003, 1.838116e-002, 2.560886e-002, -1.364367e-002, 4.636298e-003, -1.097482e-002, -2.420013e-002, -5.959285e-003, -3.929863e-003, 1.725553e-002, 4.503723e-003, 1.450562e-003, -1.358968e-002, -2.688416e-003, -6.138842e-003, -2.860506e-002, -8.850789e-003, -2.493743e-004, 9.327210e-003, -8.146095e-003, -5.784340e-003, -1.190728e-002, -1.410171e-002, 2.881166e-003, 4.196966e-003, -3.340272e-002, 2.408678e-002, 1.953433e-002, 1.751605e-002, -1.294712e-002, 1.259551e-002, 4.822541e-003, -1.285387e-002, 7.584076e-003, 2.209625e-003, -2.435822e-002, 1.594428e-002, 1.405188e-002, -1.337705e-002, -8.199248e-003, 4.812843e-002, 5.971904e-003, 4.822333e-002, -2.524155e-002, 3.099712e-002, 3.281449e-002, 2.755073e-002, -1.151290e-002, -2.000465e-002, 4.621183e-003, 6.681990e-003, -4.194747e-003, -3.395149e-003, -1.477939e-003, 2.732339e-002, -1.477939e-003, -3.395149e-003, -4.194747e-003, -5.447141e-003, 6.414994e-002, 4.888476e-002, 4.155586e-002, 6.176499e-002, 5.754307e-002, -1.092200e-002, 8.756915e-002, 1.076423e-002, -1.626057e-002, 3.562448e-002, -4.558047e-002, -3.566123e-002, 6.068614e-002, 1.935337e-003, -4.181098e-002, 1.679087e-002, -1.695426e-002, 1.885238e-002, 5.834842e-002, 7.910311e-002, -1.279904e-001, -1.521688e-001, -1.503926e-002, 7.051405e-003, -3.652573e-004, -2.460809e-002, 2.565732e-003, 1.459465e-002, 2.565732e-003, -2.460809e-002, -3.652573e-004, 3.578276e-002, 2.343711e-002, 1.562947e-002, -7.503806e-003, 3.047391e-002, 6.631372e-003, -2.577865e-002, 5.219838e-002, -3.830106e-003, -1.591502e-002, 5.931113e-002, -5.674607e-002, 4.914450e-003, -3.007374e-002, -2.226778e-002, -2.382556e-002, -5.343901e-002, -2.669420e-003, -2.035686e-003, -3.401118e-002, -5.388586e-004, 1.053264e-001, -2.069827e-002, -2.835022e-002, -6.043589e-003, -1.373662e-002, -9.277968e-003, 1.048615e-003, 3.475665e-002, 1.048615e-003, -9.277968e-003, -1.373662e-002, 4.718497e-003, -4.121169e-002, 1.378960e-002, 6.475305e-004, 4.699696e-002, 6.216829e-003, 2.587057e-002, -6.051648e-003, 6.031991e-004, -2.990647e-002, 9.899904e-003, 8.439037e-002, 9.630211e-002, -1.441167e-002, -1.129008e-002, 5.079103e-002, -2.566770e-002, -3.617951e-003, 5.361942e-002, 4.322682e-003, -2.471480e-002, 3.581125e-002, -6.511850e-002, -3.520543e-002, -6.765137e-003, -9.168458e-003, -1.650941e-002, 3.642487e-003, -1.916893e-002, 3.642487e-003, -1.650941e-002, -9.168458e-003, -2.109425e-002, 1.849687e-002, 5.191447e-003, -9.408470e-005, 8.222513e-003, 9.308378e-003, 1.276381e-002, -1.927505e-002, 2.890081e-003, 7.279202e-002, 2.585467e-002, -1.008940e-002, -6.579303e-003, 9.317851e-002, 1.831211e-003, -1.487173e-002, 3.503756e-002, 4.660881e-002, 1.516080e-002, -5.017419e-003, -9.563744e-002, -1.380616e-002, -1.154007e-002, -4.213481e-002, 2.395595e-002, -1.182614e-003, -3.856754e-002, -1.182614e-003, -5.140826e-002, 1.228772e-002, -4.680327e-002, -1.922805e-002, -4.105539e-002, 5.100361e-002, -9.287222e-002, 5.100361e-002, 4.192878e-002, 1.801777e-001, 9.406950e-003, -2.701290e-002, 2.161178e-002, -1.253845e-003, -2.947651e-002, -1.253845e-003, -3.630463e-004, -2.998217e-001, 6.263968e-002, 2.421454e-001, -2.253548e-002, 3.129795e-002, -3.109123e-002, 3.129795e-002, -1.430256e-002, -2.245032e-003, -1.584994e-003, 1.054972e-001, -7.101916e-003, -4.306403e-003, -1.757795e-002, -4.306403e-003, 4.065512e-003, -8.215079e-002, -1.906746e-002, -6.939671e-002, 3.088335e-002, -5.444154e-004, -4.130613e-002, -5.444154e-004, -6.980799e-002, -1.438505e-002, 2.228353e-001, 2.660432e-004, -3.122196e-002, 2.593236e-003, 1.878792e-003, 2.593236e-003, -1.712850e-001, -2.049040e-002, -3.740163e-002, -1.925560e-002, 3.919706e-002, -1.113514e-003, 7.660445e-004, -1.113514e-003, 2.957475e-002, -4.566640e-002, -4.440969e-002, -4.357395e-002, 1.259134e-002, 1.314793e-002, -7.230634e-002, 1.314793e-002, -8.642848e-002, -1.134343e-002, 1.355018e-001, -3.870501e-002, 2.094399e-002, -3.388970e-003, 2.074082e-002, -3.388970e-003, -8.539126e-002, 1.806031e-002, -1.192514e-001, 4.496352e-002, 6.853681e-002, 1.656257e-003, 8.332723e-003, 1.656257e-003, -5.160340e-002, 2.408625e-002, 2.537789e-001, 3.003793e-002, 1.337913e-002, -7.440067e-003, 6.822309e-002, -7.440067e-003, -2.628128e-002, 2.203460e-002, -1.516156e-002, 6.354031e-002, -1.901767e-002, 1.388789e-002, -1.595712e-001, 1.388789e-002, 7.381025e-002, -2.183716e-001, -7.254692e-002, 6.898141e-002, -2.056126e-002, 2.118036e-002, 1.056887e-001, 2.118036e-002, -1.004930e-001, 3.279511e-002, -1.783776e-002, 1.265684e-001, -


© ISO/IEC 2004 — All rights reserved

Copyright International Organization for Standardization
Provided by IHS under license with ISO
No reproduction or networking permitted without license from IHS
Not for Resale

6.496114e-002, 1.123578e-001, 1.871834e-001, 1.123578e-001, -2.092983e-001, 8.303800e-002, 1.528996e-001, 3.775326e-002, -2.371994e-002, 6.322092e-003, -6.469037e-002, 6.322092e-003, 4.236723e-002, -4.479710e-002, -1.346814e-001, -1.068584e-001},
{1.123579e-003, 1.619491e-003, -3.979056e-003, 9.243187e-004, -3.670440e-003, -9.238374e-003, 2.946587e-003, -1.237902e-003, 3.419622e-003, -1.237902e-003, 2.946587e-003, -9.238374e-003, -3.670440e-003, 9.243187e-004, -3.979056e-003, 1.619491e-003, 7.571051e-003, -5.573252e-003, -1.035989e-002, 1.140187e-002, -6.912133e-003, 6.724828e-003, 1.163249e-002, 7.581129e-004, -7.450134e-003, -1.217378e-002, 1.018405e-002, 2.481251e-002, 1.020847e-002, -7.555071e-003, -1.942348e-002, -2.496648e-002, -2.023355e-002, -1.411000e-003, 8.862753e-003, -1.425671e-002, -2.354495e-002, 2.615247e-004, -1.177468e-002, 8.331048e-003, -1.557349e-002, -3.596556e-003, -1.205351e-002, -2.675347e-002, -1.968407e-002, 6.931096e-003, 8.052852e-003, 6.112308e-003, -7.862720e-003, -2.373173e-002, -3.515093e-002, -1.544311e-002, -7.250873e-003, -1.141121e-002, 1.824828e-003, -2.558303e-002, -1.879817e-002, -1.204361e-002, -1.246610e-002, -2.390191e-002, 1.326366e-002, -5.808215e-003, -1.730530e-002, 2.746045e-005, 1.117916e-002, -5.616670e-003, 1.990014e-002, 1.050581e-003, -1.834495e-002, 7.939405e-003, -6.115016e-003, 2.406715e-003, -2.408674e-002, -2.326251e-004, 2.857595e-002, -1.125948e-002, 1.527308e-002, -8.270630e-003, 1.238244e-002, 1.496692e-002, -1.516193e-003, -1.404010e-002, 1.277305e-002, 4.932161e-003, -2.779596e-003, 3.964948e-003, -1.098815e-002, -3.513591e-003, 1.301540e-002, 5.671335e-003, 1.294328e-002, -7.123420e-003, -8.740185e-003, -7.964384e-003, -2.783104e-003, -1.467562e-002, -9.978633e-003, -1.613990e-002, -2.340613e-003, 6.533611e-003, -4.357493e-003, 6.057487e-003, -3.317742e-003, 1.069754e-002, 1.624723e-002, 2.046447e-002, -7.345451e-003, -9.337625e-003, -1.747557e-002, -3.877285e-002, 2.721125e-004, -9.524982e-003, 2.983514e-003, -1.986734e-002, -6.228441e-004, -1.261721e-002, 2.099139e-002, -2.245573e-002, -3.621816e-002, -1.870109e-002, -3.744643e-002, 8.559786e-004, -2.857234e-002, -1.207614e-002, 2.795042e-003, -2.327217e-002, -2.284071e-002, -6.901466e-003, -6.549599e-003, -4.147741e-003, -9.304144e-003, 1.202329e-002, -7.927527e-002, 1.202329e-002, -9.304144e-003, -4.147741e-003, 2.936920e-002, -3.269622e-002, 5.272362e-002, 2.008351e-002, 4.651322e-002, -2.611776e-002, 3.837903e-002, 2.253465e-002, -6.275474e-002, -2.206309e-002, 2.645864e-002, 5.836753e-003, 1.743060e-003, 5.932553e-002, -4.732155e-002, 4.129043e-002, -5.315121e-003, -4.747978e-002, -8.729549e-003, -4.050196e-002, -1.139222e-001, -6.168358e-002, 4.172228e-002, 3.490610e-002, -6.111995e-003, 1.160356e-002, -1.315539e-002, 2.349845e-005, 1.483147e-002, 2.349845e-005, -1.315539e-002, 1.160356e-002, -1.720585e-002, -5.126212e-003, 4.916958e-002, -4.835477e-002, 3.493089e-002, 6.306372e-002, 6.788318e-002, 3.325871e-003, -6.177762e-002, -4.464914e-002, 9.375640e-003, 2.358676e-002, 9.157350e-004, 1.118393e-002, 1.272171e-003, 4.666121e-002, 1.602864e-002, 2.510254e-004, 5.075338e-002, -6.568579e-002, -4.907912e-002, 2.008457e-002, 6.167145e-002, 9.774012e-002, 7.901796e-003, 2.073334e-002, 2.165405e-002, -1.439381e-003, 1.004855e-002, -1.439381e-003, 2.165405e-002, 2.073334e-002, 1.739645e-002, 1.718224e-002, 2.071039e-002, 1.127428e-002, -2.993744e-002, -4.825244e-002, -2.447599e-002, 1.202157e-002, -3.572775e-002, 1.314697e-002, 8.220922e-002, 4.794890e-002, -4.687446e-002, -5.816557e-002, -4.223968e-002, -6.559500e-002, -1.203900e-002, 4.817680e-002, 1.310066e-002, 4.333449e-003, -2.119480e-002, 3.255288e-002, -1.529503e-002, 5.047654e-002, 5.883377e-003, 5.089591e-003, -8.075935e-003, -7.828018e-003, 3.830032e-002, -7.828018e-003, -8.075935e-003, 5.089591e-003, 1.699131e-002, -1.377727e-002, 1.008626e-002, -9.419504e-002, -1.041116e-002, -2.151895e-002, 6.992584e-002, 3.073703e-002, -2.173172e-003, -1.465512e-002, -4.200048e-002, 4.061451e-002, 6.815899e-002, -4.572081e-003, 6.180340e-003, -3.651767e-002, -4.696719e-002, 3.167860e-002, -1.063755e-002, 6.204775e-002, -8.048588e-003, 9.127480e-002, 2.540916e-002, 4.735211e-002, 1.022856e-002, 2.347603e-002, 1.787520e-002, 2.347603e-002, 1.111324e-002, -4.535689e-003, -1.633788e-001, -1.524320e-001, 2.446145e-002, 7.154860e-002, -3.142890e-001, 7.154860e-002, 8.333203e-002, -7.299020e-002, -8.855651e-002, 4.662566e-002, 5.146536e-003, 3.878548e-002, -3.788566e-001, 3.878548e-002, 1.034100e-001, 1.000408e-001, -6.532502e-002, -3.375178e-001, -2.181058e-002, -4.708872e-003, 2.153213e-002, -4.708872e-003, 1.028941e-001, -2.340454e-002, -6.365649e-002, -1.394695e-002, -1.297721e-002, -1.407539e-002, 6.378794e-002, -1.407539e-002, -1.046789e-001, -1.764459e-002, -5.854021e-002, 1.580216e-002, -2.826239e-002, -3.725084e-002, 1.861709e-002, -3.725084e-002, 9.604674e-002, 1.025205e-001, 1.153300e-001, -4.957021e-002, -9.394373e-003, -1.380331e-002, 1.228323e-001, -1.380331e-002, 1.640950e-001, 1.219916e-003, -3.989023e-002, 4.630746e-002, 1.994642e-002, 9.811998e-003, -2.142186e-003, 9.811998e-003, -3.717368e-002, 7.289345e-002, -1.627935e-002, -9.400576e-002, 8.026266e-002, -5.983072e-002, 1.712270e-002, -5.983072e-002, -3.918966e-002, 3.569969e-002, -3.910934e-002, 2.656543e-002, 4.783116e-003, -1.439840e-002, 4.854603e-003, -1.439840e-002, 9.020598e-003, -1.161133e-001, 5.508844e-002, -1.725682e-002, 1.157199e-003, -2.216830e-002, 5.487094e-002, -2.216830e-002, -1.018179e-001, 7.983113e-002, 5.097148e-002, -1.086743e-001, 2.460150e-002, -2.793079e-002, -3.868159e-003, -2.793079e-002, -5.250386e-002, -6.564824e-002, -1.143311e-002, 3.182961e-002, -6.278500e-002, 5.632252e-005, -8.864032e-003, 5.632252e-005, -2.142837e-002, -7.098194e-002, -1.044027e-003, 1.765961e-001, -1.435898e-002, 4.661751e-002, -1.005236e-001, 4.661751e-002, 3.830488e-002, -6.496346e-003, 2.511800e-002, -2.496028e-002, -

© ISO/IEC 2004 — All rights reserved


Copyright International Organization for Standardization
Provided by IHS under license with ISO
No reproduction or networking permitted without license from IHS
Not for Resale

2.642440e-005, 1.425174e-002, -5.907490e-002, 1.425174e-002, 1.161011e-001, 8.429083e-002, 5.720279e-002, -5.848189e-002, -1.984889e-002, 2.750577e-002, -8.161953e-002, 2.750577e-002, 6.561917e-002, -2.872596e-002, -8.231278e-003, -3.574486e-003},
{-6.013652e-004, 9.826266e-004, 1.725517e-003, 2.461957e-003, 1.988616e-003, -1.417552e-003, -3.851276e-003, 6.626032e-003, -1.096516e-002, 6.626032e-003, -3.851276e-003, -1.417552e-003, 1.988616e-003, 2.461957e-003, 1.725517e-003, 9.826266e-004, 2.894917e-002, 2.834810e-003, -7.858225e-004, 2.335972e-003, 1.074304e-002, 1.174813e-002, 8.864773e-004, -1.233394e-002, 8.517291e-003, -2.714529e-003, -1.907786e-002, 9.850542e-003, 1.004383e-002, -8.132119e-003, -7.785090e-003, 2.567228e-003, 4.329273e-002, 6.870136e-003, -1.099264e-002, -1.555660e-002, 5.137493e-003, 2.044381e-002, -1.300855e-002, -1.146711e-002, -1.457870e-002, 1.314321e-002, 2.297456e-002, 1.146358e-004, -2.909465e-003, -1.026944e-002, -1.110349e-002, 9.645139e-004, 1.261313e-002, -1.823132e-002, -1.264785e-002, 2.693449e-003, 3.158205e-002, -3.243091e-003, 7.899411e-003, 8.193196e-003, 3.214117e-003, 1.083719e-002, 1.328733e-002, 1.170202e-002, 1.836386e-002, -1.618291e-003, -2.694838e-002, 1.106730e-002, 8.340501e-003, 7.338070e-003, -4.349610e-003, 1.943365e-002, 1.278050e-002, -9.408991e-004, 3.271355e-003, 5.698455e-005, -1.202603e-003, -1.744838e-002, -9.001627e-004, -1.997679e-002, 6.809329e-003, -3.171481e-002, -1.781643e-002, 7.771641e-003, 4.225641e-003, 2.320078e-002, 1.068383e-002, -1.462948e-002, 1.080485e-002, -1.793167e-002, 2.971378e-003, -2.540451e-002, -1.041735e-002, -1.032752e-002, -3.274283e-002, -1.153407e-002, -2.696089e-002, -3.180846e-002, 1.616698e-003, 2.379958e-002, 1.619364e-002, 6.149501e-003, -7.346339e-003, -2.760675e-002, -1.013439e-002, 7.442795e-004, 6.503315e-003, 1.190332e-002, -8.967587e-003, 2.184482e-002, -4.033766e-003, 3.745310e-003, -5.218337e-004, -2.235592e-002, 4.056214e-003, -5.030119e-003, -7.381882e-003, 1.398894e-002, -2.712142e-002, 2.568965e-002, 3.435250e-002, -7.703147e-003, 9.196164e-003, 1.869091e-002, 3.397270e-002, 4.005550e-002, -2.201543e-003, 1.726706e-002, 2.192906e-002, -1.479819e-002, 1.791645e-002, -1.509196e-003, 8.846520e-003, 9.479169e-003, -1.497208e-002, 1.276871e-003, 1.745157e-002, 1.276871e-003, -1.497208e-002, 9.479169e-003, 6.629380e-003, 1.531592e-002, -1.583491e-002, -1.684974e-002, -2.701800e-002, -2.527572e-002, 1.628958e-002, 2.679610e-002, -6.914371e-002, -4.021791e-002, -3.869269e-002, -3.439891e-002, 3.641703e-002, -8.403902e-002, 3.917858e-002, 2.616620e-002, -1.363766e-002, -7.637362e-003, 1.375495e-003, -5.421117e-002, -8.498174e-002, 2.870060e-002, 8.218828e-002, 6.132151e-003, 4.887685e-003, 3.340985e-004, -1.460740e-002, -4.348075e-003, -8.414249e-003, -4.348075e-003, -1.460740e-002, 3.340985e-004, -8.488316e-002, 3.462043e-002, 1.616250e-002, 2.248102e-002, 2.479777e-003, -3.675979e-002, -1.477376e-002, -1.145144e-002, -1.554054e-002, -4.209692e-002, -5.436494e-002, 1.061042e-003, -3.898562e-002, -1.891028e-002, 4.300709e-002, -7.698389e-002, 2.751457e-002, -2.626342e-002, -2.278177e-002, -1.011633e-001, -3.376805e-003, -7.024880e-002, -3.453208e-002, -6.959613e-003, -1.162758e-002, -3.502390e-003, 6.762633e-003, -2.414149e-003, -1.186040e-002, -2.414149e-003, 6.762633e-003, -3.502390e-003, -5.171407e-002, -1.651853e-002, 5.231185e-002, 3.451056e-002, -8.092681e-004, -5.133288e-002, -3.240369e-002, 3.406531e-002, 2.438712e-002, 3.238358e-002, -2.941185e-002, 6.724187e-003, 1.186395e-002, -1.252241e-002, 4.402242e-002, 1.998534e-002, 2.264264e-002, 1.998507e-002, -5.890006e-002, 8.548541e-003, -7.082186e-002, 3.619954e-002, -1.669543e-003, 2.901838e-002, -2.707993e-003, -3.103509e-003, 1.000998e-002, -9.290886e-003, 3.502544e-002, -9.290886e-003, 1.000998e-002, -3.103509e-003, -5.135479e-002, -5.098813e-003, 7.922443e-003, 4.595438e-003, 1.049877e-002, 3.381201e-002, 3.124886e-002, 1.484890e-002, -2.888164e-002, -6.682317e-002, -1.949394e-002, -8.126645e-003, 5.010638e-002, -5.264724e-003, -1.428441e-002, -1.601848e-002, 4.833225e-004, 4.290085e-002, -8.231813e-002, 1.886385e-002, 3.955497e-002, 1.204564e-002, 9.720929e-003, -1.225179e-002, -1.167356e-002, 3.510318e-002, -4.818839e-002, 3.510318e-002, 3.873369e-002, 5.081110e-002, 1.825040e-001, -5.517801e-003, -2.803924e-002, -1.586699e-001, 1.692631e-001, -1.586699e-001, -8.482935e-002, 1.197257e-001, -2.702264e-002, -2.711315e-001, -1.152037e-002, -3.399377e-002, 2.710859e-001, -3.399377e-002, -2.919508e-004, 2.937372e-001, -4.119745e-002, -2.162901e-001, 3.751585e-002, 3.882555e-002, -3.941943e-002, 3.882555e-002, 7.300304e-002, 3.509960e-002, -5.756887e-002, 1.095047e-001, 3.083725e-003, 1.714521e-002, -9.467118e-004, 1.714521e-002, -1.868541e-002, 6.058306e-002, 6.044962e-002, -1.024558e-001, 4.547559e-002, -2.406667e-002, 5.382421e-002, -2.406667e-002, -6.708144e-002, 1.187496e-001, -1.203016e-002, -1.983013e-001, 2.098397e-002, -5.275998e-003, 4.302694e-002, -5.275998e-003, -7.254107e-002, 4.371882e-002, -8.028755e-002, 7.334793e-002, -4.209177e-002, 2.870106e-002, 2.640729e-002, 2.870106e-002, 2.263700e-002, -5.823202e-002, 1.363194e-001, 1.470391e-001, -8.568559e-003, -1.938556e-002, -3.584075e-002, -1.938556e-002, -7.546507e-002, -2.179308e-002, 6.563560e-002, 2.696843e-002, -9.189524e-003, 7.843503e-003, 8.599760e-002, 7.843503e-003, 1.009924e-001, 4.595761e-003, 4.193471e-003, -2.921824e-002, -4.689657e-003, 9.419806e-003, 8.145035e-002, 9.419806e-003, 1.238943e-002, -2.614578e-002, -1.215541e-002, 7.465756e-002, 7.409523e-003, -3.475525e-002, 4.590568e-002, -3.475525e-002, -6.682984e-004, -1.475464e-002, 1.196753e-002, 4.736375e-002, -6.982453e-004, -6.492740e-003, 1.739131e-002, -6.492740e-003, -1.633077e-002, 4.025566e-002, 1.746340e-001, -9.282991e-002, 6.828752e-003, -3.525794e-002, 2.036159e-001, -3.525794e-002, -2.777136e-002, 4.251708e-003, -1.840016e-001, 1.263570e-001,


© ISO/IEC 2004 — All rights reserved

--`,,```,,,,````-`-`,,`,,`,`,,`---
Copyright International Organization for Standardization
Provided by IHS under license with ISO
No reproduction or networking permitted without license from IHS
Not for Resale

2.395255e-002, -2.301772e-002, -1.473996e-002, -2.301772e-002, 2.614714e-002, 1.150542e-001, 2.824893e-002, -1.507560e-002, -2.938041e-002, -9.327642e-003, -4.286321e-002, -9.327642e-003, -5.558422e-004, 3.567340e-002, -1.992594e-002, 1.046647e-001},
{8.444797e-004, 1.222522e-003, -7.911617e-003, 2.022042e-003, 8.656071e-003, 6.298157e-004, 2.285705e-003, -9.927941e-005, -6.326225e-003, -9.927941e-005, 2.285705e-003, 6.298157e-004, 8.656071e-003, 2.022042e-003, -7.911617e-003, 1.222522e-003, -3.617476e-003, -5.936127e-003, 5.857854e-003, 8.779484e-003, -6.014204e-003, -1.433157e-002, 1.395008e-002, 1.752680e-002, 3.728152e-003, -1.017787e-002, -1.695179e-002, 1.025154e-002, -3.300562e-003, -1.457517e-002, -1.146608e-002, -8.933295e-003, -1.712678e-002, 3.477741e-002, -1.398092e-002, 2.978401e-003, -1.036770e-002, 5.759509e-003, 1.055294e-002, 8.220531e-003, -9.231819e-003, 8.158743e-003, 1.612892e-002, -8.892951e-003, -1.359370e-002, -9.311024e-003, -2.500235e-003, 1.589913e-002, -3.258717e-002, 9.868329e-003, -2.116685e-002, -2.448287e-002, -2.930552e-002, 6.611951e-004, 8.606364e-003, -3.322754e-003, -2.443345e-002, 2.378411e-003, -1.912282e-002, -4.379258e-002, 4.635848e-004, -1.126087e-002, -3.788969e-003, 1.484606e-002, 9.228616e-003, 2.303711e-002, -3.114574e-004, 4.947646e-003, -9.850523e-003, -1.641705e-002, -1.752793e-002, -1.819039e-002, -1.995170e-002, 1.655488e-002, -1.930322e-002, 7.710619e-003, 1.584507e-002, 1.229335e-002, -7.354468e-003, -4.942692e-004, 9.224028e-003, 1.214163e-002, -1.441924e-002, 2.410985e-003, 1.797852e-003, 3.137832e-002, -5.215297e-003, 6.954579e-003, 1.187207e-002, 1.835677e-002, -8.920940e-003, 4.373690e-003, 2.347860e-002, 2.531349e-002, -5.957279e-003, 2.451124e-002, 1.372582e-002, 1.680823e-002, -3.219148e-004, -9.126400e-003, -1.537006e-002, -1.115786e-002, 2.098581e-002, -6.926182e-003, 3.030606e-002, 7.550547e-003, -6.248566e-003, 3.307294e-002, -6.145447e-003, -1.047036e-002, 4.428837e-003, 7.790687e-003, -1.661699e-003, 1.900098e-002, 2.175933e-002, 1.304632e-002, 5.907945e-003, -1.618745e-002, -3.724964e-002, -2.946802e-002, -4.246211e-002, -2.883024e-002, 1.905421e-002, -1.113275e-002, -2.296435e-002, 7.402182e-003, -1.377764e-002, -4.305724e-003, -1.533712e-002, -4.069539e-003, -1.001473e-002, 1.364027e-002, 1.368324e-002, 1.364027e-002, -1.001473e-002, -4.069539e-003, 3.170762e-002, 1.043182e-002, 2.392006e-002, 1.658773e-002, -6.156054e-002, -5.295166e-002, -5.581653e-002, 9.570449e-002, 3.283548e-002, -7.236165e-002, -1.476506e-002, -6.783232e-003, -8.133669e-002, -7.905659e-002, 4.578479e-002, 8.877150e-002, -1.051480e-001, -5.285575e-002, -3.339981e-002, 3.623128e-002, -3.263616e-003, -4.977661e-002, 5.425622e-002, 7.530029e-002, 5.576054e-003, 9.845909e-003, 4.631050e-003, 1.168440e-002, 5.619667e-003, 1.168440e-002, 4.631050e-003, 9.845909e-003, 4.605038e-003, 6.280239e-002, -3.521175e-002, -4.165026e-002, 1.780110e-002, -1.384818e-002, 2.572792e-003, -4.417032e-002, 2.948549e-002, 3.812337e-002, 3.655110e-002, 2.973615e-002, -3.801837e-002, 3.149706e-002, -2.255823e-003, -5.542458e-002, -9.584531e-002, 3.237496e-002, 1.079266e-001, 1.835688e-002, 2.928541e-002, -2.357262e-002, 4.226678e-002, -1.549428e-002, 6.601543e-003, 1.798594e-002, 6.085863e-003, 2.588691e-003, -5.855691e-003, 2.588691e-003, 6.085863e-003, 1.798594e-002, 5.111852e-002, -9.576300e-004, -9.830604e-003, -2.268549e-002, -3.360554e-002, 3.051767e-002, 2.949879e-002, -2.957037e-002, 3.427933e-002, 5.179409e-003, 2.305238e-002, 1.894227e-002, -7.316259e-002, 7.258294e-002, 2.266123e-002, -1.461911e-002, 4.886884e-002, -6.452515e-002, 2.961000e-002, -5.537491e-002, -1.489514e-002, 4.095610e-002, 3.812006e-002, -9.035256e-004, 4.004000e-003, 4.384903e-003, -7.220002e-003, 5.588471e-003, 2.950420e-002, 5.588471e-003, -7.220002e-003, 4.384903e-003, 1.877299e-002, 1.514813e-002, 4.100587e-003, -1.242539e-002, 6.673208e-002, -5.251087e-002, 3.244050e-003, 3.215697e-002, 2.941760e-002, -6.888191e-002, -3.838263e-002, -3.315635e-002, -3.404286e-002, -6.956731e-002, -3.431386e-002, 2.706008e-002, -3.239160e-003, -1.292458e-002, 5.563936e-002, -4.320831e-002, -1.143869e-001, -8.802120e-002, 4.182653e-002, 3.440888e-002, 5.080318e-002, 3.524099e-002, -2.466635e-002, 3.524099e-002, -1.241916e-001, 5.541906e-002, 1.955389e-001, 1.036811e-001, -7.060273e-002, -6.584331e-002, 1.731284e-001, -6.584331e-002, 1.371276e-001, -2.532117e-001, -4.398549e-002, -2.165002e-001, -2.040388e-003, -1.669829e-002, -6.430051e-002, -1.669829e-002, 9.114583e-002, -5.360894e-002, -1.138895e-001, -2.537996e-001, 6.351502e-003, -2.178054e-002, -1.959363e-002, -2.178054e-002, -1.426110e-001, 1.102558e-001, -7.862101e-002, 1.802761e-001, -5.131895e-002, -3.636873e-002, -2.761614e-002, -3.636873e-002, -3.833947e-002, 5.776706e-002, 7.130652e-002, -1.047658e-001, 5.578138e-002, 1.323777e-002, -3.769746e-002, 1.323777e-002, -5.380104e-002, 5.781598e-003, 2.060388e-001, -6.564103e-002, 3.324898e-003, -9.410495e-003, -3.686001e-002, -9.410495e-003, -1.024753e-001, -1.025006e-001, 9.496488e-003, -1.465050e-002, -2.059957e-003, -4.148027e-002, 4.647043e-002, -4.148027e-002, -1.177355e-002, -9.564098e-002, 3.094986e-002, 8.707332e-002, 1.204748e-002, 2.783684e-003, -4.907355e-003, 2.783684e-003, 1.120506e-001, 9.068529e-002, -5.081330e-002, -1.521378e-001, -1.599422e-002, 8.337474e-003, -2.019083e-002, 8.337474e-003, 4.060731e-003, 8.596551e-002, -2.589237e-002, -2.084400e-002, 9.229705e-003, 1.221731e-002, 2.583076e-002, 1.221731e-002, 7.630105e-002, -1.612872e-001, 1.025007e-002, 2.274780e-002, -3.248574e-002, -8.820162e-004, -7.599741e-002, -8.820162e-004, 8.343241e-002, -1.282458e-001, 7.382261e-002, 1.741491e-001, 1.283877e-004, -2.827314e-002, 6.308128e-002, -2.827314e-002, -5.817431e-002, 1.574261e-002, 2.624413e-002, 5.563343e-003, 1.041990e-002, -1.849333e-002, 5.222137e-002, -1.849333e-002, 2.290141e-002, -5.050430e-002, -1.411183e-002, 5.418197e-002,

© ISO/IEC 2004 — All rights reserved


Copyright International Organization for Standardization
Provided by IHS under license with ISO
No reproduction or networking permitted without license from IHS
Not for Resale

2.409343e-002, 5.026698e-002, -5.952002e-002, 5.026698e-002, -9.924259e-002, -9.868649e-003, -9.778710e-002, 3.843555e-002, 3.166609e-003, 8.105016e-003, 8.538199e-004, 8.105016e-003, 8.515018e-002, 1.095013e-002, 1.814971e-002, -1.281813e-002},
{-2.252434e-004, 3.246460e-003, -1.400509e-003, -8.993229e-003, -1.628607e-003, 5.628265e-003, 2.262969e-003, -4.126166e-003, 1.826432e-003, -4.126166e-003, 2.262969e-003, 5.628265e-003, -1.628607e-003, -8.993229e-003, -1.400509e-003, 3.246460e-003, -4.574818e-004, 1.223065e-002, 4.395449e-003, 2.244201e-003, -9.042103e-003, 2.168249e-002, -8.300748e-003, -1.159814e-003, 4.892541e-003, 1.225170e-002, 2.605436e-003, -5.000932e-003, -9.085923e-003, -9.333213e-003, 1.339944e-002, 3.185818e-003, 3.799998e-003, 2.383252e-002, -2.799586e-002, -1.877964e-002, 1.393321e-003, -4.161449e-003, -1.426150e-003, -1.520244e-003, 2.679879e-002, 1.134814e-002, -2.091603e-002, 9.657907e-003, 1.332794e-002, 9.510357e-003, -1.055933e-002, 2.364291e-002, 1.517999e-002, 3.322389e-003, -3.289313e-002, 3.512235e-003, 5.888530e-003, 1.092138e-002, 2.537759e-003, -7.740495e-003, -1.072890e-003, -1.580531e-002, 1.399303e-002, 1.069268e-002, 2.409950e-003, -1.458769e-002, -1.142945e-002, -4.034065e-003, 7.478055e-003, -1.178967e-003, -1.614964e-002, -9.341436e-003, -1.579546e-002, 1.550846e-002, 2.758553e-003, -9.958160e-003, -6.988872e-003, 1.703280e-002, 5.752050e-003, 4.516245e-003, 6.477640e-003, 1.107907e-002, -1.202938e-002, -1.943957e-002, 2.455300e-003, 1.895591e-003, -1.637553e-002, -6.921882e-003, -2.577761e-002, -1.499441e-002, 1.142964e-003, -1.035300e-003, -3.496879e-002, 1.516121e-002, -2.007703e-002, 1.047189e-003, 3.072396e-002, 2.136134e-002, -5.643848e-003, -1.282277e-002, -5.807598e-003, 3.796863e-003, -1.958511e-002, -1.512079e-002, -1.356543e-003, -1.856206e-002, -8.267310e-003, -5.953215e-003, 1.511718e-002, -5.873238e-003, -2.501706e-002, -3.772782e-004, -1.376673e-002, 1.466546e-002, -2.526443e-002, 7.111964e-003, -4.389728e-003, -1.191932e-002, -1.136820e-002, -1.867092e-002, -3.705689e-003, 2.972985e-002, -4.085202e-002, -9.923847e-003, 4.616584e-002, -2.384162e-002, -1.652310e-002, -6.704438e-003, 1.932472e-002, 1.258750e-002, -1.803217e-002, -7.125220e-003, 1.135714e-002, 2.532334e-004, 1.710589e-002, -3.030338e-002, -3.768784e-003, -3.030338e-002, 1.710589e-002, 2.532334e-004, -1.779655e-002, 1.803847e-002, 4.927226e-003, 7.682718e-005, -4.170965e-002, 1.907441e-002, 9.318296e-003, 3.428289e-002, 7.033488e-002, -7.610294e-002, 1.939494e-002, -1.172354e-002, -3.816888e-003, 6.759250e-002, 3.332391e-002, 7.124205e-002, 6.804294e-002, -1.540922e-002, -5.537052e-002, 6.698409e-003, -5.826199e-002, 9.812736e-002, 6.290624e-002, 2.150780e-002, 1.341946e-003, 4.976807e-003, 1.491539e-002, 3.727600e-004, 8.079468e-003, 3.727600e-004, 1.491539e-002, 4.976807e-003, -4.907153e-003, 3.486089e-002, 1.800055e-002, -2.128397e-003, -7.286722e-002, 4.538948e-003, -2.922877e-002, -1.281757e-002, 7.422501e-002, 2.201916e-002, 9.290014e-002, 8.977201e-003, -5.395828e-002, -6.506225e-002, -3.961934e-002, -1.929539e-002, 3.919374e-002, 3.703197e-002, 7.256030e-002, 7.647200e-002, -9.604288e-003, -8.874592e-002, -6.048578e-002, 6.382252e-003, -9.777542e-003, -1.110656e-002, -1.048612e-002, -1.607198e-003, -1.612285e-002, -1.607198e-003, -1.048612e-002, -1.110656e-002, 7.437156e-003, 1.331523e-002, -1.572306e-002, -2.216631e-002, -2.966905e-002, 6.305736e-003, -8.955511e-003, -7.311766e-002, -1.389823e-002, -7.960933e-003, 1.629909e-002, -4.018004e-002, 3.331082e-002, 3.689552e-002, 4.761755e-003, 1.719994e-002, 4.179963e-002, 8.950566e-003, -1.155009e-002, 5.141960e-002, 4.589805e-002, -3.426010e-002, -1.966904e-002, 4.200658e-002, -3.146785e-003, -1.473741e-002, -8.305974e-003, 1.393058e-003, 1.284383e-002, 1.393058e-003, -8.305974e-003, -1.473741e-002, -2.581600e-002, -5.826760e-002, 4.894500e-003, -3.740586e-002, -8.576448e-002, -3.025243e-002, -4.326662e-002, 2.414556e-002, -5.684831e-002, 3.098194e-002, 6.170655e-002, -9.845056e-003, -5.081076e-005, -4.619692e-002, -3.796732e-002, -1.663150e-002, 1.364699e-003, 5.214923e-002, 5.779785e-003, -3.041585e-002, -6.580725e-002, 5.427391e-002, 3.151938e-003, 2.583026e-002, 7.729213e-002, 6.329050e-003, -6.245322e-002, 6.329050e-003, 2.210124e-002, 1.289409e-001, -5.332999e-002, -1.733966e-001, -7.371084e-002, -2.848420e-002, 1.648409e-001, -2.848420e-002, -1.005821e-001, 1.782299e-002, 6.179507e-002, 2.352074e-001, -2.350916e-002, -5.684887e-002, 6.284755e-003, -5.684887e-002, -8.410984e-002, 3.319565e-001, 1.462666e-002, -8.896739e-002, 6.837732e-002, 1.265872e-002, -8.102236e-002, 1.265872e-002, -7.206986e-002, -4.611465e-002, 2.160426e-002, 2.109598e-001, -6.079265e-002, 9.071650e-003, 2.917350e-002, 9.071650e-003, -3.947831e-002, 7.803299e-002, -6.621926e-002, -7.415457e-002, 6.856850e-002, -1.247971e-002, -2.300128e-002, -1.247971e-002, 2.591422e-002, -1.102403e-001, -6.881594e-002, -1.001525e-002, 8.950604e-003, 2.805244e-002, -8.358074e-002, 2.805244e-002, 4.356643e-002, -6.427107e-002, -7.252469e-002, -7.391346e-002, -5.247682e-002, -1.800482e-002, 3.005311e-002, -1.800482e-002, -6.658481e-002, -1.144383e-001, 1.988431e-001, 7.235450e-002, -1.536795e-002, 7.557471e-003, 8.573216e-003, 7.557471e-003, -6.816710e-002, 8.534825e-002, 1.063749e-001, -6.327485e-002, -2.295176e-002, 3.236990e-002, 8.642263e-002, 3.236990e-002, -8.869812e-002, 4.226048e-002, 5.043841e-002, 2.731321e-001, 1.246976e-002, 1.899894e-002, -5.742694e-002, 1.899894e-002, -3.652818e-002, 1.561181e-001, 5.967998e-002, -8.043155e-003, -3.683865e-003, 9.616858e-003, 9.756515e-003, 9.616858e-003, -7.691089e-002, -9.696209e-002, 5.139736e-002, 1.416952e-001, -1.677860e-003, 3.583260e-002, 4.534183e-003, 3.583260e-002, 1.394373e-002, 6.266413e-002, -1.217857e-001, 5.067474e-002, 3.022003e-002, 3.905571e-003, -5.221029e-002, 3.905571e-003, -3.733085e-002, 4.277531e-002, -7.216415e-002, 8.185016e-002, -


© ISO/IEC 2004 — All rights reserved

--`,,```,,,,````-`-`,,`,,`,`,,`---

Copyright International Organization for Standardization
Provided by IHS under license with ISO
No reproduction or networking permitted without license from IHS
Not for Resale

3.155016e-003, 2.223884e-002, 4.706969e-002, 2.223884e-002, 3.989312e-002, 1.409766e-001, -5.235867e-003, -2.217970e-002, -8.777667e-003, 2.350110e-002, 2.538628e-003, 2.350110e-002, -1.086097e-002, 6.709475e-002, 1.732211e-001, -3.472083e-002}, {2.042794e-003, 4.481953e-003, -2.856932e-003, 7.251067e-006, 8.253151e-003, 4.199596e-003, -1.355222e-002, 1.975285e-003, 1.215244e-003, 1.975285e-003, -1.355222e-002, 4.199596e-003, 8.253151e-003, 7.251067e-006, -2.856932e-003, 4.481953e-003, -4.728899e-003, 2.334544e-002, 3.401863e-003, 6.916834e-003, 3.158852e-003, 1.565893e-002, -7.759718e-003, -1.751990e-002, -4.641017e-003, -2.892414e-002, 4.027769e-003, 2.334330e-002, 1.497731e-002, -3.952773e-003, -2.141376e-002, 6.012651e-003, -6.919257e-003, 7.112976e-003, -3.247442e-002, 8.474849e-003, -2.703519e-003, -1.616261e-004, 1.487047e-002, -3.548560e-003, -1.044065e-002, -7.303858e-003, 1.547535e-002, 1.994373e-003, 1.737535e-002, 2.946371e-004, -1.706433e-002, 9.111725e-003, -2.800118e-003, -2.546229e-002, -5.693621e-003, -9.154865e-003, 8.471792e-003, -8.937385e-003, -8.232488e-003, -1.086538e-002, -5.180585e-003, 2.035831e-002, 1.605130e-002, -1.411894e-002, -1.761085e-003, 1.294983e-002, 1.209760e-002, -2.361888e-002, -2.173497e-002, -1.434505e-002, 2.675551e-002, -7.673786e-003, -5.773007e-003, -2.116235e-002, 7.404395e-003, -2.265482e-002, -2.540487e-002, 7.936049e-003, 2.627451e-002, 1.062551e-002, -2.503400e-003, 8.585547e-003, 2.001828e-002, 1.124144e-002, 9.493126e-003, 1.142414e-002, 4.880277e-002, -1.348598e-002, -1.832072e-002, 4.677865e-002, 2.324646e-002, 1.916272e-002, 2.035981e-002, 4.886379e-002, 2.522501e-002, 2.874155e-002, 1.536996e-002, -1.783728e-002, 1.496402e-002, 1.036533e-003, -1.062777e-003, 4.890743e-003, 1.257879e-002, 9.979001e-003, -2.857409e-002, 1.547318e-003, 3.747592e-003, -1.354581e-002, 1.306985e-002, 1.597564e-002, -7.569565e-003, -8.763573e-003, -3.137531e-002, 3.385285e-002, 3.935298e-002, -6.413552e-003, -2.367583e-002, 1.247630e-002, 3.336052e-003, 4.562697e-003, -1.985223e-002, 2.222828e-002, -1.283541e-002, -1.655858e-003, -5.666364e-002, -5.590458e-003, -1.895378e-002, -7.271227e-003, 1.250324e-002, 5.632202e-003, 1.847372e-002, 3.458812e-003, 5.009080e-003, -4.480472e-003, -1.634355e-002, 1.613771e-002, -2.657304e-002, 1.613771e-002, -1.634355e-002, -4.480472e-003, 3.975211e-002, 2.939440e-002, 2.726498e-003, -1.852979e-002, 4.367747e-002, 1.300477e-002, 3.339859e-002, 1.699044e-003, -1.264108e-002, -4.228886e-003, 1.139537e-002, 4.323103e-002, -4.415446e-002, -5.229618e-002, 5.437787e-002, 7.534687e-002, -6.099033e-002, -7.341263e-003, -3.225954e-002, -2.945881e-002, 1.352644e-001, 2.488478e-002, 4.494975e-002, -1.017949e-003, -4.865303e-003, 3.752532e-004, 2.051329e-003, -8.578899e-003, 3.813844e-002, -8.578899e-003, 2.051329e-003, 3.752532e-004, 2.583680e-003, -1.923201e-002, 7.767360e-002, 7.264098e-003, 2.427561e-002, -1.749856e-002, -1.568517e-002, 4.765071e-002, -9.934817e-003, -3.589880e-002, -8.316940e-002, 1.944207e-002, 3.919532e-002, -2.463061e-002, -4.347583e-002, 3.586020e-002, -2.254312e-002, -2.202191e-003, 3.152285e-002, 2.885350e-002, -1.610038e-002, -8.663624e-002, 2.833807e-002, -3.541245e-002, -7.455656e-003, 1.426448e-002, -6.671579e-003, 8.637328e-003, -8.463917e-002, 8.637328e-003, -6.671579e-003, 1.426448e-002, 1.635704e-002, -4.140615e-002, -1.589463e-002, 4.496390e-003, -3.503326e-002, 4.862427e-003, -3.616477e-002, 3.125770e-002, 5.799025e-002, -6.797299e-002, 3.693914e-002, 9.523572e-002, -1.256632e-002, -4.655695e-003, 2.982996e-002, 2.361990e-002, 3.358949e-002, -4.227685e-002, -7.801346e-002, -7.376180e-002, -7.601760e-002, -5.829280e-002, -1.402300e-002, 1.639892e-002, 9.354673e-003, 2.958191e-003, -1.736510e-002, 1.627753e-002, -3.634480e-002, 1.627753e-002, -1.736510e-002, 2.958191e-003, 5.030871e-002, 1.043175e-002, 3.026974e-002, -4.572291e-002, 6.760620e-002, -7.275536e-003, -4.598055e-002, -4.187448e-002, 1.635246e-002, -6.262927e-002, -5.763345e-002, 4.453158e-002, 1.746963e-002, -3.828575e-002, 8.009918e-003, -6.044759e-002, -1.309784e-002, -4.389242e-002, 4.271565e-002, 3.001118e-003, 2.858033e-002, -1.537240e-001, -6.008390e-002, -6.172173e-002, 1.392782e-003, 2.851752e-002, 2.195564e-003, 2.851752e-002, 1.639768e-002, -1.077886e-001, -1.494768e-002, 5.021069e-002, -5.430991e-002, -4.092133e-002, -8.057001e-002, -4.092133e-002, -8.117549e-002, 2.901907e-002, -2.005002e-002, -2.787298e-002, 3.606355e-003, 5.353007e-002, -1.859363e-001, 5.353007e-002, -7.498604e-003, -2.252132e-002, 7.457476e-003, 1.330913e-001, 3.154391e-003, 3.401576e-002, 5.121451e-002, 3.401576e-002, 1.148419e-002, 4.633136e-002, -7.668381e-002, -1.061246e-001, -1.453325e-002, 3.195240e-003, 3.204862e-002, 3.195240e-003, 6.569485e-003, -1.985543e-001, 6.411435e-002, -4.932738e-002, 7.245946e-002, -3.202399e-002, 1.071632e-001, -3.202399e-002, 3.055639e-002, -1.232888e-001, -4.331879e-003, -6.319475e-002, 5.711787e-002, -3.127539e-002, 5.220164e-002, -3.127539e-002, 2.383190e-002, 9.701069e-002, 9.870560e-002, -3.443098e-002, -6.874391e-002, -1.179304e-002, -8.778443e-002, -1.179304e-002, -5.900012e-002, 2.873705e-002, -4.514087e-002, -1.710913e-001, 1.400090e-002, -5.871094e-002, 3.366340e-002, -5.871094e-002, 4.437900e-002, -7.535983e-002, 7.972703e-002, 1.194960e-002, -4.295497e-002, 2.431505e-002, 7.160371e-002, 2.431505e-002, -7.893855e-002, 3.989746e-002, -7.171093e-003, 1.934300e-001, -3.922770e-002, 2.154481e-002, -1.481019e-002, 2.154481e-002, -2.736033e-002, 1.679801e-001, -1.263537e-001, 1.189591e-001, 2.740203e-002, -1.503848e-002, 4.377775e-002, -1.503848e-002, 7.153998e-002, -2.139465e-001, 8.336652e-002, 6.836567e-002, 7.134558e-003, -2.577581e-003, 9.631755e-002, -2.577581e-003, -4.439490e-002, 2.773639e-002, 1.343443e-001, 2.585489e-002, 1.436385e-002, -1.203596e-002, -8.094461e-002, -1.203596e-002, -2.457221e-001, -5.060283e-002, -5.505325e-002, 3.244573e-002, -

© ISO/IEC 2004 — All rights reserved


Copyright International Organization for Standardization
Provided by IHS under license with ISO
No reproduction or networking permitted without license from IHS
Not for Resale

5.680823e-003, 9.965374e-003, -6.605670e-002, 9.965374e-003, -1.116296e-001, 4.390048e-002, -1.564960e-001, -1.946196e-001, 2.686116e-002, -7.824737e-003, 6.288714e-002, -7.824737e-003, 4.610561e-003, 6.899759e-002, -2.416828e-001, 9.347499e-002}, {-7.960941e-004, -3.051947e-003, 3.784386e-003, 3.315927e-003, -6.366666e-004, 7.686967e-003, -1.059827e-002, -6.849435e-003, -4.127667e-003, -6.849435e-003, -1.059827e-002, 7.686967e-003, -6.366666e-004, 3.315927e-003, 3.784386e-003, -3.051947e-003, 1.927735e-002, -6.802046e-003, 6.116741e-004, -6.126622e-003, -4.520036e-003, 2.691890e-002, 5.478561e-003, -8.961276e-003, 3.657310e-003, 3.250809e-003, -7.661884e-003, 1.354530e-002, 1.417535e-002, -6.137739e-003, -7.895477e-003, -2.225039e-003, 2.400918e-002, -9.461425e-003, -4.058675e-003, 2.130421e-003, -9.043336e-003, 8.627771e-003, -5.871771e-003, -1.664105e-003, 2.346937e-002, -3.492231e-003, 4.189902e-003, -2.011232e-002, -6.349620e-003, 3.424926e-003, 1.725842e-002, 8.371017e-003, -7.104506e-003, -7.206205e-004, 9.044414e-003, -7.981501e-004, 1.750122e-002, 1.763065e-002, 1.805130e-002, -3.440028e-003, 2.067158e-002, 3.259593e-003, 3.963328e-003, -3.927554e-003, 2.276155e-003, 2.001942e-002, 1.023233e-003, 2.164232e-002, -3.803459e-003, 7.765525e-003, -1.465901e-002, 1.114178e-002, 2.179550e-002, 2.694855e-002, 3.486456e-002, -2.161177e-002, -7.637131e-003, -2.000663e-002, -1.093449e-002, 1.970017e-002, -1.076020e-002, -2.958077e-002, -1.765201e-002, -4.515408e-003, -6.963856e-003, 7.553360e-003, -1.924259e-003, -1.713943e-002, -1.596434e-002, -7.143278e-003, 6.533183e-003, -1.577509e-002, 1.278955e-002, -1.036161e-002, 2.181072e-002, 8.639302e-003, -9.393221e-003, 9.825621e-003, -2.245737e-002, 5.604073e-003, -3.044708e-003, 1.259254e-003, -9.212452e-003, -1.892254e-002, -2.462910e-002, -8.000576e-003, -1.158238e-002, -1.814267e-002, 2.528898e-002, 1.498784e-002, -2.445327e-002, 3.777291e-004, 2.434255e-002, 5.276586e-003, 9.806057e-003, -1.313803e-002, -3.143114e-002, 9.391879e-003, -7.220826e-003, -1.159064e-002, -2.052807e-003, 1.297083e-002, 6.915916e-003, 2.902167e-002, 4.616271e-002, 3.465722e-002, -1.103341e-002, -3.373368e-002, 1.449269e-002, -2.820988e-003, -2.127952e-002, 5.270833e-003, 1.531559e-003, -8.919623e-003, 1.231530e-002, 3.868846e-003, 7.871448e-003, 3.868846e-003, 1.231530e-002, -8.919623e-003, -4.258705e-002, 3.703445e-002, 2.227790e-002, -5.092655e-004, -2.566673e-002, 2.673160e-002, 3.369581e-003, 4.891481e-003, 5.392285e-003, 1.906044e-002, -3.368245e-003, -8.710833e-002, -7.059347e-002, -5.830969e-002, 5.022601e-002, 5.245758e-002, -9.310279e-003, 2.266434e-002, 2.674204e-002, 2.346657e-002, -2.582628e-002, -2.664951e-002, 3.373127e-002, 2.747611e-003, 3.571411e-003, -7.176221e-004, -1.553041e-004, 1.056074e-002, 2.232235e-002, 1.056074e-002, -1.553041e-004, -7.176221e-004, -1.807324e-002, -2.151178e-002, 3.803942e-003, 1.275206e-002, -3.367235e-002, -2.857622e-002, -5.632108e-002, 3.214670e-002, 8.315301e-003, 2.850096e-002, 8.082945e-002, -5.773828e-002, -6.496152e-002, -7.385806e-003, 6.319929e-002, 5.724262e-002, -9.747549e-003, 1.232903e-001, 3.207773e-002, -2.067019e-002, -2.468871e-002, -2.193782e-002, -3.826405e-002, -1.542083e-002, 8.549693e-004, 7.959272e-003, 6.103884e-003, 1.166578e-002, -1.003879e-002, 1.166578e-002, 6.103884e-003, 7.959272e-003, -3.348123e-002, 4.084015e-002, -4.009788e-002, -4.377704e-002, 2.089658e-002, -9.406508e-003, -1.731479e-002, -1.882795e-002, 3.451134e-002, 4.794917e-002, -1.687801e-002, -1.361531e-002, -2.620962e-002, 3.564041e-002, 3.736332e-002, -3.348701e-002, -1.118682e-002, -3.730514e-002, -3.665021e-002, -1.550424e-002, -1.326700e-001, 1.089659e-001, -5.416606e-003, -1.949739e-002, -6.754033e-003, 6.565196e-003, 4.563127e-003, 1.022953e-002, -3.505029e-002, 1.022953e-002, 4.563127e-003, 6.565196e-003, -5.429214e-002, -2.825881e-002, 2.885286e-002, 9.720312e-003, 5.474436e-002, -6.079252e-004, -2.125962e-002, -2.618186e-003, 6.478997e-002, -2.545106e-002, 8.001263e-002, -3.159277e-002, 7.267495e-002, -2.484128e-002, -8.378947e-003, 4.899185e-002, -1.056139e-002, -2.486233e-002, 1.522398e-002, 2.601585e-002, -7.968688e-004, 3.883345e-002, -4.507701e-002, -5.834648e-002, 4.655104e-002, -1.581023e-002, -1.731667e-002, -1.581023e-002, -7.405957e-002, 7.137703e-003, 7.421547e-002, -1.164814e-001, -2.845583e-002, 7.292089e-002, -1.364475e-001, 7.292089e-002, -8.132714e-002, 1.071677e-001, -2.402981e-002, 2.317649e-001, 1.430035e-002, -5.354887e-002, -2.057621e-001, -5.354887e-002, 1.408961e-001, -8.543150e-002, -6.226503e-002, -2.300018e-001, 3.926352e-003, -1.279839e-002, -4.812742e-002, -1.279839e-002, -5.039796e-002, 1.216455e-001, -8.482522e-002, -2.821252e-002, -3.240202e-002, -2.353994e-003, 6.150205e-002, -2.353994e-003, 3.274607e-003, 5.585537e-002, -4.037293e-002, -6.655560e-002, 1.583838e-002, -5.172955e-003, 1.509277e-002, -5.172955e-003, -6.609360e-002, 1.329125e-001, 2.479631e-001, 3.927478e-002, -1.614343e-002, 3.002329e-002, 3.178116e-002, 3.002329e-002, 5.826839e-002, -3.972253e-002, 1.422778e-001, 1.242667e-001, 1.488134e-003, 1.637754e-002, 1.275336e-002, 1.637754e-002, 1.723299e-002, -1.862828e-001, 1.374858e-001, 1.958161e-001, 1.438897e-002, -4.039317e-002, -1.825675e-003, -4.039317e-002, 1.173806e-001, -4.123338e-002, -8.779121e-004, 2.477207e-004, -7.660390e-003, 1.582617e-002, -1.694845e-002, 1.582617e-002, -6.623243e-002, 2.446342e-002, 2.559844e-002, -9.149665e-002, 1.500625e-002, -2.986784e-002, -5.800130e-003, -2.986784e-002, -8.291995e-002, -2.970681e-002, -5.744102e-002, -1.328808e-001, 1.976427e-002, -3.298879e-002, 2.999101e-002, -3.298879e-002, 1.439143e-002, -5.021712e-002, 4.860531e-002, 9.137862e-002, -2.594367e-002, -2.564362e-002, 3.278344e-002, -2.564362e-002, 1.079711e-001, -8.346220e-003, -1.193255e-002, 3.223649e-002, 2.007006e-002, 3.429946e-002, 1.233688e-002, 3.429946e-002, -1.604787e-001, 7.952843e-003, -5.258014e-002, -1.411901e-001, -


© ISO/IEC 2004 — All rights reserved

Copyright International Organization for Standardization
Provided by IHS under license with ISO
No reproduction or networking permitted without license from IHS
Not for Resale

2.392398e-002, 4.822559e-002, -7.783140e-002, 4.822559e-002, -4.859490e-002, -1.228259e-001, 1.154008e-002, -5.707005e-002, -1.760058e-002, -2.196834e-002, 1.079754e-001, -2.196834e-002, -8.262204e-002, -8.970473e-002, -1.925790e-001, 1.759686e-001},
{-1.067249e-003, -3.166256e-003, 8.321517e-003, 3.122108e-003, -3.363452e-003, 3.998189e-004, -1.502825e-003, -1.791230e-004, 2.239872e-002, -1.791230e-004, -1.502825e-003, 3.998189e-004, -3.363452e-003, 3.122108e-003, 8.321517e-003, -3.166256e-003, -1.678042e-002, 1.562055e-002, 3.777423e-003, 5.716478e-003, -1.674239e-002, 3.868941e-003, -1.343603e-002, -1.227506e-002, -4.518785e-004, 6.405387e-003, -2.162555e-002, -5.544605e-003, 1.787165e-002, 3.061073e-003, -1.437052e-002, 2.281937e-003, -1.149989e-002, 1.457891e-002, -2.179121e-002, 7.486828e-003, -1.206265e-002, -7.214573e-003, 2.575448e-003, -1.427815e-002, -5.428842e-002, -8.172638e-003, -7.516292e-003, -2.852997e-004, -1.090972e-002, 8.578863e-003, -4.461297e-002, -8.964027e-003, -4.358671e-003, -1.735152e-002, -1.648353e-002, -8.114431e-003, -9.449359e-003, -1.907964e-002, -1.136606e-002, -3.504749e-002, -3.128570e-002, -5.847311e-003, -6.236511e-004, -1.073150e-002, 1.276391e-002, 1.113039e-002, -6.744086e-003, -9.272882e-003, 1.708241e-002, 2.104513e-002, -8.374319e-003, -2.665337e-002, -1.112795e-002, 2.404053e-003, -2.509742e-002, -7.934580e-005, 5.224537e-002, 2.400856e-003, 9.350658e-004, 1.677002e-002, 2.676122e-003, -8.643355e-003, -1.481042e-002, 3.192907e-002, 6.704570e-003, 1.826476e-002, 1.791814e-002, 7.158801e-003, 2.701822e-002, 2.086667e-002, 2.667887e-002, 6.864956e-003, 5.386073e-003, 5.466632e-004, 1.825604e-002, 2.732912e-002, -2.348474e-002, -8.208730e-003, 6.689182e-003, 6.003475e-003, 2.051354e-002, -1.095984e-002, -3.071718e-002, -2.622312e-002, -9.482870e-003, -3.895938e-002, -2.231365e-002, -5.938928e-002, 3.353704e-003, -2.034096e-002, -1.074584e-002, -3.153808e-002, -2.959102e-002, -1.534131e-002, 4.323478e-003, -2.613163e-003, 5.438844e-003, 2.534842e-002, 9.664877e-004, 3.063906e-003, 3.700828e-002, -3.206769e-002, -1.281879e-002, -2.618514e-002, -5.443659e-002, -5.284542e-002, -8.668168e-003, -1.391534e-002, 7.672792e-003, -2.497118e-002, -2.174444e-002, 2.246809e-002, 3.067650e-003, -1.862280e-002, 1.304310e-002, -1.641710e-002, 1.453686e-002, -1.641710e-002, 1.304310e-002, -1.862280e-002, 8.251880e-003, -1.123226e-003, 2.111216e-002, -1.613344e-002, -1.593005e-002, 3.716801e-002, 3.485939e-002, -8.035254e-004, 2.266172e-002, 4.471270e-002, 3.638838e-002, -3.642424e-002, 9.976715e-002, 1.418957e-002, -6.944324e-002, -1.363727e-001, 4.972296e-002, 3.005523e-002, -4.026266e-002, -2.583533e-003, 4.988839e-002, 1.362428e-001, -2.898081e-002, -3.232917e-002, 9.475332e-003, 1.207349e-002, 1.164896e-002, -4.171932e-003, -2.477202e-002, -4.171932e-003, 1.164896e-002, 1.207349e-002, 4.968474e-002, 4.890605e-002, 2.913571e-002, 6.602136e-002, 1.815991e-002, -3.251713e-002, -6.339231e-003, 3.512275e-002, 1.535776e-002, -1.478096e-002, -2.049842e-002, -2.773220e-002, -8.234535e-002, -4.840980e-002, -8.770104e-002, 2.705596e-002, 1.439376e-002, 4.178000e-002, 3.699119e-002, 6.188635e-002, -7.227802e-002, 6.147217e-002, 3.082331e-002, 7.129711e-002, -6.651987e-003, -6.126267e-003, 2.031384e-002, -1.018843e-002, -1.292570e-002, -1.018843e-002, 2.031384e-002, -6.126267e-003, 1.493928e-002, -7.263474e-003, 4.214273e-002, 1.079302e-001, 6.512089e-002, -8.195088e-002, -5.663181e-002, 1.071241e-002, 3.362717e-002, 8.613461e-002, 5.927150e-002, -2.173047e-002, -8.524175e-002, -2.296160e-002, -9.307039e-002, 3.954982e-002, 4.460450e-002, 6.655708e-002, 1.386526e-002, 5.929505e-002, -6.835809e-002, -5.739812e-002, -1.004971e-002, 6.372406e-002, -6.958245e-003, -2.079068e-002, -1.268072e-002, -1.469975e-004, -2.222257e-002, -1.469975e-004, -1.268072e-002, -2.079068e-002, 3.255709e-002, 9.065518e-003, 1.260840e-002, 1.741554e-002, 3.613378e-002, -1.671267e-002, 1.139906e-002, -4.043440e-003, 6.817956e-003, 6.240534e-002, -5.273882e-002, 2.107120e-002, 3.519258e-002, 2.259839e-002, -6.285943e-003, 7.165863e-002, 1.814243e-002, 3.001440e-002, 4.144121e-002, -5.893717e-002, 3.685197e-002, 1.790136e-002, 6.341743e-002, 1.648614e-002, 4.875612e-002, 1.703530e-002, -1.102566e-002, 1.703530e-002, 3.010548e-002, 7.534834e-002, -1.258321e-001, -8.777346e-002, -3.524745e-002, 4.136950e-002, -8.008091e-002, 4.136950e-002, 2.676077e-002, -2.108720e-001, -3.774166e-002, 5.623667e-002, -1.727675e-002, -2.838908e-002, 5.109436e-002, -2.838908e-002, 6.410556e-002, 2.926610e-002, -4.474687e-003, -1.687939e-001, 3.078898e-003, -4.661727e-002, 7.645839e-002, -4.661727e-002, -1.624860e-002, -1.696107e-001, 1.422171e-001, 7.562282e-002, -4.010644e-002, -1.535550e-002, 1.145995e-004, -1.535550e-002, 2.004587e-003, 2.820483e-002, -2.908643e-002, 8.351164e-002, 2.966542e-002, 9.316631e-002, 6.554039e-002, 9.316631e-002, -5.387441e-002, 6.907478e-003, 3.852581e-002, 2.041636e-001, 7.005902e-002, 7.067243e-002, -7.041550e-002, 7.067243e-002, -4.212468e-002, 1.914422e-001, 3.489347e-002, 1.032863e-001, -4.638583e-002, -3.086315e-002, -3.153469e-002, -3.086315e-002, 1.038807e-002, 1.500276e-001, -2.632019e-002, 1.952655e-002, -4.201505e-002, -1.990821e-002, -1.045425e-002, -1.990821e-002, 5.877180e-002, -1.998507e-001, -8.348750e-003, 1.957175e-001, 5.610192e-004, 1.715128e-002, -1.095228e-001, 1.715128e-002, -1.186099e-002, 3.217429e-002, 2.131826e-002, -4.699560e-002, -2.135353e-002, -2.090063e-002, -8.947168e-005, -2.090063e-002, -5.391609e-002, -8.591198e-003, -7.250609e-002, -1.419072e-001, -1.625949e-003, 1.226504e-002, -8.567906e-003, 1.226504e-002, 4.993069e-002, -3.664252e-003, -5.324743e-003, -1.498800e-002, 4.850037e-002, 5.040873e-003, 6.306781e-002, 5.040873e-003, -1.571022e-001, -5.709186e-002, 1.530267e-001, 1.090433e-001, -1.369833e-002, -7.587129e-002, 8.025779e-002, -7.587129e-002, -1.208701e-001, -1.279255e-001, -3.049615e-002, 1.780994e-001, -

© ISO/IEC 2004 — All rights reserved


Copyright International Organization for Standardization
Provided by IHS under license with ISO
No reproduction or networking permitted without license from IHS
Not for Resale

2.163759e-002, -1.383519e-002, -2.518140e-002, -1.383519e-002, -9.083302e-002, 4.365999e-002, 1.540201e-001, -2.758932e-002, 3.765883e-002, 3.692370e-002, 3.887239e-002, 3.692370e-002, 9.302208e-003, 9.470101e-003, -8.024806e-002, 5.520822e-002},
{2.178954e-004, 2.273724e-003, 3.714364e-003, -7.745272e-003, -6.237940e-003, -5.567903e-006, 4.901932e-003, 6.123066e-004, -2.605368e-003, 6.123066e-004, 4.901932e-003, -5.567903e-006, -6.237940e-003, -7.745272e-003, 3.714364e-003, 2.273724e-003, 3.925055e-003, -3.359380e-003, 7.681224e-003, -3.477802e-003, 4.114900e-003, 5.862165e-003, -2.130123e-003, -1.919655e-003, -8.426075e-003, -3.405299e-003, -1.341882e-002, -1.402132e-002, -5.919800e-003, -1.756190e-002, -1.895739e-002, 5.939646e-003, 1.668451e-002, -3.369354e-002, 1.023453e-003, 9.424862e-003, -2.237173e-003, -1.506397e-002, 2.299479e-002, 4.392640e-003, 1.316195e-002, -3.862451e-003, 1.835338e-003, 6.859811e-003, 1.412893e-002, 2.439521e-003, -1.544556e-003, -2.854024e-002, 1.572958e-002, -8.445635e-004, -5.809158e-003, -2.514685e-002, 5.632654e-003, 3.088154e-002, 9.407491e-003, 5.380348e-003, 5.301755e-003, 8.835493e-003, 5.864867e-003, -1.599818e-002, 2.691674e-003, 1.761617e-002, -2.394650e-003, 5.655046e-003, 6.104302e-003, 1.544892e-002, 1.223431e-002, -1.792094e-002, -2.012681e-004, -7.231634e-003, -1.847122e-002, 1.661667e-003, -7.894532e-004, 2.218931e-002, 4.135697e-003, 5.429905e-003, -2.887104e-002, -1.273824e-002, 7.823303e-003, -2.441251e-003, 1.933603e-002, 6.093452e-003, 2.259243e-002, 1.378484e-002, -4.166224e-003, -5.956084e-003, -5.473193e-002, 4.171030e-002, 6.103267e-002, 1.631128e-002, -3.304352e-002, -4.246334e-002, 3.201937e-003, -3.151856e-003, 3.112230e-004, -2.728876e-002, 2.506552e-002, -1.862001e-003, 1.184225e-003, 2.592668e-003, -3.152933e-003, -5.530691e-002, 1.912969e-002, -2.407803e-003, 2.176953e-002, 5.401362e-003, -1.209453e-003, -3.542685e-002, -2.178617e-004, 8.846501e-003, 1.354465e-002, -7.307885e-003, -1.308984e-002, 8.528223e-003, 8.437816e-003, -9.696889e-003, -3.747252e-002, -1.194475e-002, 7.762471e-003, 2.891668e-002, 4.146494e-002, -9.442458e-003, -2.648536e-003, -1.115960e-002, -5.487121e-002, -3.848556e-003, -4.042285e-002, 2.204266e-002, -4.815081e-003, -9.544203e-003, 1.664353e-002, -1.829974e-002, 3.376563e-002, -1.829974e-002, 1.664353e-002, -9.544203e-003, 2.102442e-002, 2.416459e-002, 5.664987e-002, -2.682461e-002, -8.519969e-003, 4.189520e-002, -2.727280e-002, 6.410621e-002, -2.404497e-002, 3.153996e-002, -6.665135e-003, 1.113650e-002, 9.513572e-003, -7.007742e-003, -2.859526e-002, -4.313454e-002, -6.026161e-002, -1.197198e-002, -4.802207e-002, -9.148971e-002, 1.278682e-001, 9.470803e-002, -2.383415e-002, -1.131346e-001, -3.192481e-003, 5.903900e-003, 5.706020e-003, 6.181386e-004, 1.751103e-002, 6.181385e-004, 5.706020e-003, 5.903900e-003, -6.022818e-002, 2.336813e-002, -1.835442e-002, 3.277392e-003, 1.960620e-002, 2.590156e-002, 9.258266e-004, -2.679676e-002, 2.123257e-002, -6.301991e-003, -9.603104e-003, -2.566898e-002, 9.249240e-003, 4.799356e-002, 4.014948e-002, 9.544983e-002, -2.060764e-002, -8.068399e-002, -5.201900e-003, 1.008313e-001, -4.704767e-002, -4.212007e-002, 1.408084e-001, -4.522409e-002, 1.804315e-003, 3.257996e-003, 1.943131e-002, -1.406444e-002, 4.612155e-002, -1.406444e-002, 1.943131e-002, 3.257996e-003, 3.084112e-002, 2.723488e-002, 1.569074e-002, -2.507966e-002, -3.517110e-002, 4.310287e-002, -1.651547e-002, -2.252471e-002, 1.997331e-002, -1.703957e-002, -5.049192e-002, -2.018757e-002, 8.230848e-002, -6.090782e-002, -3.989540e-003, -6.000623e-002, -4.211242e-002, 1.844263e-002, 2.146719e-002, 7.382808e-002, -4.457714e-002, -1.928464e-003, 1.259325e-002, -5.321379e-002, 6.421144e-003, -5.518636e-003, -1.148055e-003, -2.279747e-002, 6.018493e-002, -2.279747e-002, -1.148055e-003, -5.518636e-003, -2.962669e-002, -4.616208e-002, 2.669517e-002, 4.606416e-003, 7.024419e-003, 1.451324e-003, -1.247106e-002, -1.516377e-002, 3.792484e-002, -1.217761e-002, 2.189617e-002, -1.039258e-002, 5.539111e-002, -4.520316e-002, -2.336735e-002, 3.690844e-002, -4.412723e-002, 3.458563e-002, 4.060423e-002, -5.662501e-002, 2.798947e-002, 3.758616e-002, -4.541553e-002, 4.086854e-002, -8.259938e-003, 1.904004e-002, -6.061227e-002, 1.904004e-002, -3.666126e-002, -9.556177e-003, -1.261730e-001, -4.585156e-002, -2.997389e-002, 3.361863e-002, -4.863974e-004, 3.361863e-002, -1.713615e-001, 1.631330e-001, -1.728701e-002, -9.337362e-003, 3.827206e-002, 1.919275e-003, -1.265909e-002, 1.919275e-003, 5.644892e-002, 2.339207e-001, 4.645448e-003, -1.674157e-001, 6.872145e-003, 1.584857e-002, -1.567438e-002, 1.584857e-002, 9.829848e-002, -1.398310e-001, -1.360841e-002, 4.729487e-002, 1.554169e-002, -5.037367e-003, 1.398667e-002, -5.037367e-003, 1.805364e-001, -2.004670e-001, 1.454571e-001, 1.596541e-001, 1.787706e-002, -1.120425e-002, -2.194089e-002, -1.120425e-002, -1.266309e-001, -7.743582e-002, -1.956410e-002, -7.280893e-002, -4.249765e-002, -1.023602e-002, -1.156232e-001, -1.023602e-002, -4.476343e-002, 3.538243e-003, -7.704367e-002, -1.675182e-001, -5.839040e-003, -1.470699e-002, -7.137997e-002, -1.470699e-002, 9.546717e-002, 2.221798e-001, -1.458510e-003, -1.416584e-001, -2.712637e-002, -2.996927e-002, -4.073501e-002, -2.996927e-002, -4.786811e-002, -7.137808e-002, 5.058797e-002, 1.353678e-001, -4.240275e-003, -7.678460e-002, 3.143722e-002, -7.678460e-002, -4.819734e-002, 1.201366e-001, -1.312900e-002, 7.950246e-002, 9.813733e-002, -1.408962e-002, -1.306642e-002, -1.408962e-002, -4.878521e-002, 2.580717e-002, 1.145627e-001, 4.069885e-002, -3.415987e-002, 2.030218e-003, -3.598560e-002, 2.030218e-003, -1.337391e-002, 9.157747e-002, -2.494612e-002, 7.634422e-003, 3.212310e-002, -6.584564e-003, -5.312329e-002, -6.584564e-003, -4.263751e-002, -2.910435e-002, 5.260089e-002, 2.189137e-001, 1.047865e-003, -1.840086e-002, -7.946270e-002, -1.840086e-002, -3.190575e-002, 7.538459e-002, 2.971504e-002, -6.341609e-002, -


© ISO/IEC 2004 — All rights reserved

Copyright International Organization for Standardization
Provided by IHS under license with ISO
No reproduction or networking permitted without license from IHS
Not for Resale

9.349815e-002, -1.090969e-003, -1.355472e-001, -1.090969e-003, 9.607872e-002, -5.501605e-002, 1.289592e-001, 8.310300e-002, 3.594184e-002, 1.761292e-002, -4.868083e-002, 1.761292e-002, 3.150899e-002, 7.539020e-002, -4.447009e-002, 5.867955e-002}, {-2.142409e-004, 2.533603e-003, -2.941629e-003, -1.197984e-003, 2.124743e-003, 9.833752e-004, -1.461840e-003, -1.134227e-002, 1.841352e-002, -1.134227e-002, -1.461840e-003, 9.833752e-004, 2.124743e-003, -1.197984e-003, -2.941629e-003, 2.533603e-003, 8.102618e-003, -2.033238e-003, 1.512519e-003, -6.139559e-003, 3.351085e-004, 7.070483e-003, 1.298899e-002, -4.711293e-004, 1.204971e-002, 1.331996e-003, 2.276691e-002, -3.983892e-003, -8.019230e-003, -5.457057e-004, 1.967964e-003, -4.068460e-003, 5.212526e-003, -2.447032e-002, -5.990333e-003, 3.124170e-003, -9.165975e-003, -1.090333e-002, 6.551228e-003, -1.587840e-002, 1.158502e-003, -6.244320e-003, 1.287078e-002, -5.215178e-003, -9.879401e-003, -1.521541e-003, 1.094639e-002, -2.060201e-002, 1.728601e-002, -5.356563e-003, 4.471958e-003, -2.604530e-003, -2.561727e-002, -4.219444e-002, -1.358336e-002, 4.977235e-003, -6.511423e-003, -4.401643e-004, -3.046499e-003, -2.959188e-002, -1.065824e-002, 1.321381e-002, 2.064988e-002, 9.586209e-003, 1.610037e-003, -1.010925e-002, 7.195179e-003, 1.539120e-003, -1.561485e-003, -1.887370e-002, -2.243205e-002, -1.282444e-002, 9.725621e-003, -9.201502e-003, -3.071488e-003, -9.756027e-003, -3.995683e-003, 5.771188e-003, 2.161712e-003, -1.611457e-002, 2.556902e-003, 3.334261e-003, 7.353741e-003, 1.466711e-002, 1.770448e-002, -1.761786e-002, -3.598511e-002, -5.860816e-003, 1.655288e-003, -1.214270e-003, 9.447122e-003, -3.945857e-003, 3.898776e-003, -2.051171e-002, 5.087915e-003, 1.496290e-002, 5.512867e-003, 1.534918e-002, -5.897231e-004, 3.052904e-002, 2.255032e-002, -4.830727e-003, -1.193747e-002, 1.771412e-002, -2.633132e-002, -3.806927e-003, -8.364054e-003, 1.384503e-002, -3.849197e-004, -4.120914e-004, 2.307795e-002, 7.166612e-003, -2.085784e-002, -7.481213e-003, -3.613834e-002, -9.542642e-003, 2.853800e-002, -1.697169e-003, 2.664439e-002, -2.515207e-002, -6.041398e-002, -3.743094e-002, 2.426113e-002, 1.768113e-002, -3.118629e-003, -3.225187e-002, -6.903950e-003, 3.859681e-003, 5.115112e-003, 9.467358e-004, -1.409810e-003, -7.580470e-003, -1.227405e-002, -7.580470e-003, -1.409810e-003, 9.467358e-004, -9.415877e-003, -1.984162e-002, -7.813835e-003, -2.125709e-003, 3.550124e-002, -4.561188e-002, 6.550289e-003, 2.712133e-002, 7.596028e-003, 2.344644e-002, 9.043291e-003, 1.343978e-002, -2.421443e-002, 5.229708e-002, 6.710854e-002, 2.127322e-002, 6.178473e-003, -2.058238e-002, 1.080284e-002, -5.311414e-002, -4.983223e-002, 1.009983e-001, 2.622103e-002, -9.332908e-003, 1.861226e-002, 2.678869e-003, -5.421912e-003, 6.292205e-003, 8.185025e-003, 6.292205e-003, -5.421912e-003, 2.678869e-003, 2.887829e-002, 3.293056e-002, 3.977498e-003, -5.753542e-002, 4.424876e-002, 7.208592e-003, 1.342435e-002, -3.737066e-003, 3.385566e-002, 4.408684e-003, -1.386527e-003, 4.299068e-002, -3.722089e-002, -5.376140e-002, 2.587084e-002, 8.946439e-003, -3.494538e-002, 1.878861e-002, -7.558654e-003, -4.177523e-002, 5.763476e-002, -4.887058e-003, 3.861573e-002, 1.837774e-002, -8.378550e-003, 1.463624e-003, 6.052764e-003, 7.335473e-003, -2.081253e-002, 7.335473e-003, 6.052764e-003, 1.463624e-003, -1.071770e-002, -1.039321e-002, 3.073617e-002, -6.445441e-003, -7.973548e-002, 2.634142e-002, -2.221417e-002, 4.440765e-002, -9.621147e-003, -3.869450e-002, 1.938675e-002, 1.668010e-002, -4.171180e-002, 2.359520e-002, 3.035157e-002, -1.170831e-002, -1.463827e-002, -1.074811e-002, 2.530130e-003, -7.745801e-002, -7.933496e-002, 2.495031e-002, 1.839028e-002, 9.584474e-003, -1.556307e-002, 5.615873e-004, -1.370938e-002, 8.663279e-003, 4.109835e-003, 8.663279e-003, -1.370938e-002, 5.615873e-004, -3.245810e-002, 4.205891e-002, -6.570368e-003, -2.369104e-002, 2.989596e-002, 1.511964e-002, -8.307349e-003, -3.329139e-002, 1.034793e-004, 5.924698e-003, -9.634086e-003, 4.137850e-002, -4.744203e-003, -2.649913e-002, -1.504507e-002, 2.935704e-002, -3.342194e-002, 1.743318e-002, -1.336020e-002, -6.587307e-002, -3.766095e-002, -5.892698e-002, -4.396766e-002, -3.027833e-002, -2.319741e-002, 1.008794e-002, 3.662142e-003, 1.008794e-002, -2.215213e-002, 4.278640e-002, -8.152505e-003, -6.461680e-002, 1.160261e-002, 3.860978e-002, -3.112721e-001, 3.860978e-002, -2.209830e-002, -1.642334e-002, -3.593547e-002, -8.362579e-003, -6.532120e-003, 1.255011e-001, -5.749538e-001, 1.255011e-001, -5.541985e-002, 7.005092e-002, -1.648839e-002, 1.309255e-001, -3.268021e-002, -1.521697e-003, -1.255496e-003, -1.521697e-003, 1.168201e-002, -4.653285e-002, 1.808577e-002, 9.452626e-002, 5.326396e-002, 1.320892e-002, 4.078018e-002, 1.320892e-002, -3.259215e-002, 2.315027e-002, -1.378895e-002, -1.111612e-001, -3.655406e-002, -1.871468e-002, 5.145998e-002, -1.871468e-002, -4.389393e-002, 2.793958e-002, -1.810555e-001, -1.898369e-002, 1.647653e-002, -1.177013e-002, -8.346787e-003, -1.177013e-002, -5.965628e-002, 9.450369e-003, -1.122853e-001, -4.542986e-002, 4.134806e-002, -5.555851e-003, 5.300354e-003, -5.555851e-003, -5.002651e-002, -9.553847e-002, -9.152504e-002, 2.024871e-002, -4.523371e-002, -2.310558e-002, 3.376599e-002, -2.310558e-002, -1.220330e-002, 1.871251e-001, -7.920585e-002, 7.338909e-002, 1.812281e-002, 1.427140e-002, -9.517842e-002, 1.427140e-002, 1.677808e-001, 6.374629e-002, -2.922270e-002, -4.496844e-002, 3.415600e-002, 1.550560e-002, -8.448771e-002, 1.550560e-002, 1.271813e-002, 5.375098e-002, -7.439329e-002, 4.920641e-003, -6.577328e-002, 2.060247e-002, -4.644376e-002, 2.060247e-002, -1.740531e-002, 1.172798e-002, 3.847979e-002, 7.295341e-002, 2.374446e-002, -8.730058e-003, 3.670015e-002, -8.730058e-003, 1.277940e-002, 2.913197e-002, 2.886888e-002, -5.995055e-002, -5.012116e-003, 6.067183e-003, 9.065222e-002, 6.067183e-003, 8.312543e-002, -9.239656e-002, 1.736269e-001, 1.227108e-001, -

© ISO/IEC 2004 — All rights reserved


Copyright International Organization for Standardization
Provided by IHS under license with ISO
No reproduction or networking permitted without license from IHS
Not for Resale

3.176421e-002, 5.273969e-002, -4.426189e-002, 5.273969e-002, 3.186677e-002, -1.352361e-002, 6.382820e-002, 1.514785e-002, 4.781842e-002, 1.873830e-002, 2.977049e-002, 1.873830e-002, 4.966998e-002, -3.167407e-002, -1.062681e-001, 1.197671e-001}, {-1.548874e-003, -4.349153e-003, 2.933601e-003, 4.666691e-003, -4.596499e-003, 9.979400e-004, -8.161717e-003, 8.146121e-003, 1.753735e-002, 8.146121e-003, -8.161717e-003, 9.979400e-004, -4.596499e-003, 4.666691e-003, 2.933601e-003, -4.349153e-003, 9.549936e-003, -8.528670e-003, -1.079318e-002, -2.734966e-003, 1.350388e-003, -4.515378e-003, -2.012409e-002, 1.068349e-002, -1.442117e-002, 1.914075e-002, -1.026361e-002, -7.888337e-003, -3.489852e-003, 1.547977e-002, -7.319450e-003, -5.594061e-003, -1.955807e-002, -1.703928e-002, 9.447121e-003, 2.841546e-003, -2.043841e-002, -6.190069e-003, -6.436713e-003, 1.663282e-002, -2.946846e-002, -5.966975e-003, -6.471970e-003, -4.012647e-003, -6.630628e-003, -2.552766e-002, -3.943001e-003, -1.122147e-002, 2.784800e-002, 3.308074e-003, -1.985768e-002, 1.688756e-002, -1.427077e-002, 9.703419e-004, -2.228227e-003, 6.029737e-003, 5.253776e-003, -2.783962e-002, 5.322609e-003, 4.244106e-003, -1.149369e-002, -6.151168e-003, -2.357054e-002, 1.302401e-002, 2.176441e-002, 7.269981e-003, 1.395439e-003, -2.393321e-002, -1.293121e-002, -7.099961e-003, 3.277271e-004, 2.975839e-002, -8.780650e-003, 5.117900e-003, -7.414612e-003, -4.407275e-003, -2.998316e-003, -1.557490e-002, -1.858742e-002, 2.816577e-003, 1.563022e-002, -2.039092e-003, -9.707032e-003, -2.134112e-002, 4.102471e-002, 1.628639e-002, 2.488350e-002, 1.605754e-002, 8.632977e-003, 2.782991e-002, -8.127113e-003, -9.320865e-003, 3.028596e-002, 1.343200e-002, 9.094542e-003, 1.677521e-002, 9.319247e-003, 1.794127e-002, 2.209534e-002, 1.682449e-002, 5.259602e-002, 1.280802e-002, 3.111521e-002, 2.536540e-002, -9.268243e-003, 3.740281e-002, 2.129280e-002, 5.540493e-003, 2.490182e-002, 1.225446e-002, -1.133156e-002, 4.259632e-003, 1.004031e-002, -1.638623e-004, 1.401698e-003, 1.252024e-002, 1.684701e-002, -1.009703e-002, 2.829404e-002, 1.914573e-002, 5.322410e-003, 2.943448e-002, -6.759362e-003, 2.744430e-002, 2.265253e-002, 3.138256e-002, 2.617001e-002, -1.004808e-002, -1.067402e-002, 4.897470e-003, 3.950479e-002, -4.308578e-003, -2.898998e-002, -4.308578e-003, 3.950479e-002, 4.897470e-003, 2.048998e-003, 2.368231e-002, 2.036847e-002, -1.330223e-002, 4.601141e-002, 5.347939e-002, 3.161459e-002, 2.178675e-002, -1.353785e-002, -5.592262e-002, -6.645884e-002, -1.920269e-002, -4.452965e-002, -9.933056e-002, 7.283204e-002, 4.068526e-002, -7.411096e-002, -2.225762e-002, -7.176946e-002, -2.422803e-002, 1.871873e-002, 5.606511e-002, 2.593824e-003, 7.453225e-003, 1.603146e-002, 7.816121e-003, 3.180761e-002, 2.536988e-003, -1.041439e-002, 2.536988e-003, 3.180761e-002, 7.816121e-003, 2.341608e-002, 1.968101e-002, 3.428232e-002, 4.806496e-002, 7.757211e-002, -9.230621e-003, -3.235335e-002, 1.174661e-002, 2.215010e-002, 6.967648e-002, 1.347272e-001, 3.482061e-002, -6.589044e-002, -3.343975e-003, -1.182509e-001, -5.692075e-002, -3.715911e-002, 2.723143e-002, 3.621223e-002, -2.107603e-002, -9.268106e-002, -1.076535e-002, 3.871806e-002, 1.093959e-001, 6.638894e-003, -2.717615e-003, 2.165761e-003, -9.959180e-003, 2.059514e-002, -9.959180e-003, 2.165761e-003, -2.717615e-003, 5.825574e-002, -1.424919e-002, 3.421577e-002, 2.453162e-002, 1.784266e-002, 6.375971e-003, -2.466329e-002, 6.215534e-003, -7.491667e-002, -1.925982e-002, 7.694935e-003, 2.250431e-002, 2.028427e-002, 3.505674e-002, 2.494184e-002, 1.800759e-002, 2.394149e-002, -1.187014e-001, -8.060248e-003, -6.732341e-002, 2.801588e-002, 3.341597e-002, -5.927560e-002, -1.453240e-002, -1.354521e-002, 1.518026e-004, 1.197260e-002, -1.419894e-002, 2.791070e-002, -1.419894e-002, 1.197260e-002, 1.518026e-004, -3.451699e-002, 6.233815e-002, -4.969505e-003, 1.270524e-002, 4.925405e-002, 6.126255e-002, 2.918263e-002, -2.637276e-002, -6.105112e-002, -5.291938e-002, 4.143271e-002, 3.466308e-002, 2.483192e-002, -5.120195e-002, 3.349881e-002, -6.504220e-002, -6.007527e-002, -4.029037e-002, -1.235165e-001, 6.998793e-002, 2.020968e-002, -4.879630e-002, 4.391378e-002, -9.927394e-002, 3.028147e-002, -2.214229e-002, 6.008562e-002, -2.214229e-002, -1.351812e-001, 2.029580e-002, -1.197423e-001, -7.802936e-002, -1.708165e-002, -1.697929e-002, -7.484911e-003, -1.697929e-002, 8.636445e-003, 1.419385e-001, -8.615288e-003, -1.097902e-001, 1.208499e-002, -8.689967e-003, -2.236301e-001, -8.689967e-003, -6.104667e-002, 3.243401e-001, -1.203512e-002, 5.888464e-003, -1.084306e-002, 9.998190e-004, -8.225788e-002, 9.998190e-004, -2.136392e-001, -6.863667e-002, 1.689285e-001, 9.188309e-002, -2.149254e-002, -3.950657e-002, -1.278114e-002, -3.950657e-002, 2.057629e-002, 6.231319e-002, 2.041697e-002, 4.043728e-002, -2.381300e-003, 4.987784e-002, -3.543983e-002, 4.987784e-002, -6.065236e-002, 8.998973e-002, 1.249816e-002, -8.221437e-002, 2.055857e-002, 5.447068e-002, 2.886316e-002, 5.447068e-002, 6.956945e-002, -7.979515e-002, 2.830141e-003, 1.394202e-002, -5.769038e-003, -8.150382e-002, -6.010413e-003, -8.150382e-002, 3.855125e-002, 3.121835e-002, 1.603340e-002, 7.425154e-002, 3.768882e-002, 1.831353e-002, 3.453092e-003, 1.831353e-002, -7.640358e-002, -7.130277e-002, -8.586796e-002, 2.295638e-001, -1.911464e-002, -3.201976e-002, 1.335530e-002, -3.201976e-002, 8.991966e-002, 7.105186e-003, 6.662958e-002, 1.818489e-002, -6.423697e-002, -3.670468e-003, -8.955980e-002, -3.670468e-003, -4.962142e-002, -2.739778e-004, -7.052343e-002, 1.851287e-002, 6.219128e-002, 2.474183e-002, 2.605401e-002, 2.474183e-002, -7.158178e-002, 1.732217e-001, -6.211323e-002, -2.037629e-001, 9.269605e-003, 9.413809e-004, -7.504631e-002, 9.413809e-004, 2.751386e-002, -9.836105e-002, 7.816065e-002, 6.411855e-003, -2.120489e-002, 2.156549e-002, -6.025166e-002, 2.156549e-002, 9.068652e-003, 1.692573e-002, 1.645514e-001, -4.337373e-002, -


© ISO/IEC 2004 — All rights reserved

Copyright International Organization for Standardization
Provided by IHS under license with ISO
No reproduction or networking permitted without license from IHS
Not for Resale

2.206257e-002, -4.869194e-002, -2.227609e-002, -4.869194e-002, 1.066084e-001, -1.662553e-003, -5.036916e-003, 3.561674e-002, 1.056305e-002, -1.332291e-002, -2.452395e-002, -1.332291e-002, 1.193111e-001, -6.186310e-002, 1.107855e-001, -6.963526e-002}, {-7.145184e-004, -1.571489e-003, 1.264422e-003, -5.492039e-004, 3.244288e-003, 1.575406e-003, -1.399587e-002, 5.223323e-003, -6.708804e-003, 5.223323e-003, -1.399587e-002, 1.575406e-003, 3.244288e-003, -5.492039e-004, 1.264422e-003, -1.571489e-003, -4.413569e-003, -7.801260e-004, 3.639826e-004, 9.877337e-003, 1.071902e-003, -1.560964e-002, -4.352447e-003, 8.493395e-003, 2.090123e-002, -2.618321e-003, -3.067920e-002, -2.493753e-004, 1.827787e-002, 6.860374e-003, -5.680689e-003, -2.382632e-002, 1.755080e-003, -7.367890e-003, 8.626804e-003, 6.552121e-003, -5.430765e-003, 1.990876e-002, -3.743191e-003, 1.608468e-002, -1.266086e-002, -1.161366e-002, -8.018995e-003, 3.135536e-002, -3.288389e-003, -1.781837e-002, -2.615498e-003, -1.459461e-002, 3.506347e-003, -1.905611e-002, 3.458009e-004, -1.070683e-002, -2.892357e-002, -1.944952e-003, 4.154424e-003, 8.416468e-003, -1.834100e-002, -1.168090e-002, 1.486176e-002, 1.575287e-002, -6.769347e-004, -2.895149e-003, 2.562171e-002, -2.629062e-002, 5.171633e-003, 2.052083e-002, 1.846286e-002, 2.141806e-003, -1.639869e-003, -3.506122e-002, -1.893552e-002, -2.071033e-002, -2.325081e-002, -4.738067e-003, -1.076022e-002, -7.842949e-003, 2.606892e-002, -1.943067e-002, 3.606331e-002, -1.893808e-002, -8.972064e-004, -3.430326e-004, 2.242262e-003, 2.274286e-002, 2.161226e-002, 5.404146e-003, 3.455998e-002, -1.489632e-002, -3.964818e-002, -1.122263e-002, -6.569576e-003, 6.143839e-003, 2.810946e-002, -6.255481e-003, -7.095747e-003, -4.534427e-003, 4.775938e-003, 7.091035e-003, -1.057987e-002, 2.409861e-002, 3.776383e-002, 3.844239e-002, 2.503704e-002, -1.149849e-002, -9.486478e-004, 7.924899e-003, -1.665435e-002, 2.573406e-002, -5.180649e-003, -3.395247e-003, -2.658967e-002, 1.608584e-002, -2.402256e-003, -1.844659e-002, -1.316127e-003, -1.981462e-002, 5.920014e-003, 4.361220e-003, 1.749203e-002, 1.979922e-002, 4.808309e-002, 6.395210e-003, 2.018342e-002, 4.845584e-003, 2.600729e-003, 1.151316e-002, -7.862541e-003, -2.170266e-002, -2.194042e-003, -1.595948e-003, -1.372769e-002, 1.670856e-002, -1.470222e-002, 1.670856e-002, -1.372769e-002, -1.595948e-003, -1.938183e-002, 3.844747e-002, 6.545655e-002, 1.915958e-002, 6.287611e-002, 2.929886e-002, -1.240158e-003, -3.469172e-002, -1.826224e-002, -6.294547e-002, 4.010465e-002, 4.126786e-002, 2.137369e-002, -3.548445e-003, -6.602494e-002, -9.143653e-003, 1.114911e-001, -5.225618e-002, -3.153459e-002, -6.278652e-002, 2.435844e-002, -3.812400e-002, 1.030448e-002, -3.008120e-002, -4.716218e-003, 1.070877e-002, -1.753111e-002, 1.033692e-002, 4.524384e-002, 1.033692e-002, -1.753111e-002, 1.070877e-002, -1.015930e-002, 5.191651e-003, 4.980202e-003, 5.182330e-002, 6.744375e-002, -8.780090e-003, 8.341158e-002, 3.609001e-002, 3.454148e-002, 9.172815e-003, -1.210961e-001, -2.291343e-002, 2.280989e-002, 4.034956e-002, -2.380177e-002, -1.496330e-002, 4.582332e-002, -5.850930e-002, 2.666203e-002, -1.185574e-001, 6.237186e-002, -2.755647e-002, -5.850263e-003, -8.989209e-003, 2.284504e-003, -2.964321e-003, 1.732628e-002, -2.885437e-003, 1.072423e-002, -2.885437e-003, 1.732628e-002, -2.964321e-003, 3.668801e-002, 1.876564e-003, 1.879075e-002, -1.304349e-002, 4.028019e-002, 8.525649e-002, -1.428804e-002, 4.445075e-002, -3.118294e-002, -9.819919e-002, -1.695909e-002, -7.043718e-002, 1.029634e-001, -2.885523e-002, 1.865506e-002, -1.306160e-002, -2.555411e-003, 2.255953e-002, -2.654393e-002, -2.046401e-002, 2.349121e-002, -5.740244e-002, 2.588628e-002, 9.508074e-004, 3.911237e-003, -1.377315e-002, 7.189262e-003, 6.798652e-003, -2.298915e-002, 6.798652e-003, 7.189262e-003, -1.377315e-002, -7.170639e-003, 4.767703e-002, 3.625447e-002, 5.246903e-002, -3.364720e-002, 8.149356e-002, -1.611361e-002, -1.932479e-002, -2.014501e-002, -9.825961e-002, -1.476674e-002, -2.861598e-002, -7.615304e-002, -3.329483e-002, 3.807061e-002, -9.282712e-002, 4.369421e-002, 1.205727e-002, 1.039277e-002, -5.021420e-002, -2.042194e-002, -1.475531e-002, -2.439698e-003, -9.939925e-002, 2.055253e-002, -8.301479e-003, 3.455749e-002, -8.301479e-003, -1.794713e-002, -4.152356e-002, -5.490054e-002, 4.126934e-003, 2.287183e-002, 1.306940e-002, 9.806570e-002, 1.306940e-002, 1.089004e-001, -3.094895e-001, -6.348378e-003, 1.121223e-001, 3.391765e-002, 6.054065e-002, -1.556013e-001, 6.054065e-002, -6.450024e-002, 5.472952e-002, -6.715134e-002, -2.224222e-001, -1.387073e-002, -3.775575e-002, 1.623881e-002, -3.775575e-002, -9.350413e-002, 1.025425e-001, 1.026004e-001, -6.113042e-002, -2.376791e-003, 3.899174e-002, 9.047337e-002, 3.899174e-002, 1.277463e-001, -1.737424e-002, 7.699499e-002, 2.112901e-001, -4.324161e-002, -2.525865e-002, 1.300466e-001, -2.525865e-002, -3.559226e-002, 7.403237e-002, 6.202406e-002, 8.480719e-003, -3.422462e-003, -1.925683e-002, -1.473853e-001, -1.925683e-002, 2.871535e-002, 1.415564e-001, 6.350746e-002, -1.714853e-001, -2.134067e-002, 6.974510e-002, -5.598030e-002, 6.974510e-002, 7.403281e-002, 3.185152e-002, 1.098056e-001, 1.035503e-001, -3.583360e-002, -4.482095e-002, -3.394210e-002, -4.482095e-002, 7.375603e-002, -7.827108e-002, 3.294770e-002, 1.280405e-001, -1.277752e-002, 1.691637e-002, -9.008224e-002, 1.691637e-002, -1.307804e-002, -3.797024e-002, -4.928545e-002, -1.008259e-001, -2.993884e-002, 4.657328e-003, 2.349442e-002, 4.657328e-003, -3.681436e-002, -7.091057e-002, 8.932923e-003, -2.045868e-002, 3.909030e-002, -2.170801e-002, -5.804561e-002, -2.170801e-002, 1.538825e-001, -5.177484e-002, -5.157476e-002, -1.072733e-001, 7.653475e-003, -2.893686e-002, -3.985045e-002, -2.893686e-002, -1.287612e-001, 9.209988e-002, -5.512287e-002, 1.501822e-002, 4.324215e-002, -5.043448e-002, -6.417526e-002, -5.043448e-002, 6.226829e-002, 3.250081e-002, 1.664451e-001, 1.952332e-002,

© ISO/IEC 2004 — All rights reserved


Copyright International Organization for Standardization
Provided by IHS under license with ISO
No reproduction or networking permitted without license from IHS
Not for Resale

1.911967e-002, 1.687547e-002, 4.645880e-002, 1.687547e-002, 1.342922e-001, -7.489149e-002, 1.037699e-001, 1.278366e-001, -2.435990e-002, -8.934091e-003, -3.188840e-002, -8.934091e-003, 3.371568e-002, -7.295282e-002, 2.869858e-004, 8.545617e-004},
{-4.120998e-004, 5.111393e-005, -1.951891e-003, 3.739167e-003, 4.262766e-003, -8.971490e-003, -9.039557e-003, 2.981563e-003, 6.021213e-003, 2.981563e-003, -9.039557e-003, -8.971490e-003, 4.262766e-003, 3.739167e-003, -1.951891e-003, 5.111392e-005, 7.789162e-003, -1.389831e-002, -4.517922e-003, 1.361881e-003, 1.930118e-002, -2.810937e-003, -5.788457e-003, -4.484926e-003, 5.137342e-003, 2.531577e-002, -1.782894e-002, -1.366896e-002, -6.618426e-003, 2.265951e-003, -7.112715e-004, -8.315134e-003, 7.861075e-003, 1.051187e-002, 1.060871e-002, 1.203246e-003, 2.503955e-002, -1.914453e-002, 7.449302e-003, 1.211024e-002, 2.811020e-002, -1.889125e-002, -2.271882e-002, 1.451956e-002, 1.197857e-002, 9.519382e-003, 9.731485e-003, -6.672084e-003, 2.129244e-002, -3.424700e-003, -1.507081e-002, -3.037887e-002, 3.931734e-003, -1.560168e-002, 9.466611e-003, -1.375206e-002, 4.919734e-003, -8.518175e-003, -6.137469e-003, 6.779107e-003, 1.584599e-002, 9.324716e-004, 1.026525e-002, -1.688316e-002, -3.338546e-003, 3.404877e-002, -3.103506e-003, -2.682315e-003, 3.710713e-002, 6.489656e-003, -1.093028e-002, -4.116766e-003, -1.425841e-003, 9.139023e-003, 2.904394e-002, -5.684655e-003, 8.415702e-003, -1.374447e-002, -9.199764e-003, -1.953720e-002, -8.411258e-003, 4.770541e-003, 1.171576e-004, -3.284122e-003, 3.333710e-002, -2.032542e-002, 2.196409e-003, 4.466910e-003, -4.052738e-002, -4.207471e-002, -1.950688e-002, -3.635817e-003, 6.641856e-003, 4.657787e-003, -2.318506e-002, -1.315880e-002, -1.668441e-003, 8.320163e-003, -4.357887e-003, -3.742287e-003, -1.518449e-002, -1.986479e-002, 4.280758e-002, -2.268930e-002, -3.269940e-002, -1.483757e-002, -3.597073e-002, -1.849021e-002, 1.448625e-002, -4.949984e-003, -1.247864e-002, -1.685680e-002, 3.621065e-003, 3.649012e-003, -8.158384e-003, 1.732259e-002, -9.908470e-003, -7.581308e-003, 2.851991e-002, 9.585215e-003, 5.140428e-002, 1.478302e-002, -3.168294e-002, 1.018304e-002, 2.026422e-002, 6.395660e-004, -3.345821e-002, -2.191912e-003, -6.801545e-004, -9.695775e-003, -6.921972e-003, 1.562656e-002, -5.924977e-003, 1.562656e-002, -6.921972e-003, -9.695775e-003, -3.420216e-002, 2.332844e-002, -2.789326e-002, -1.553469e-002, -5.011306e-002, 3.483763e-002, 4.983847e-003, -7.141738e-002, 1.859517e-002, 3.459433e-002, -3.621059e-002, 1.359597e-002, 6.936346e-003, 3.339595e-002, -1.385322e-002, 4.140627e-003, 7.410102e-003, 3.511830e-002, 5.476237e-003, -2.136945e-002, 7.616941e-002, 1.202201e-001, -1.005036e-001, -2.760122e-002, -7.441362e-003, -1.127250e-002, -1.526618e-004, 1.933115e-002, -3.158538e-003, 1.933115e-002, -1.526618e-004, -1.127250e-002, -8.201651e-003, 1.193315e-002, -2.861681e-002, -1.001643e-002, -5.628314e-002, -1.156756e-002, 1.612245e-002, -9.433008e-003, -7.713594e-002, 8.457597e-002, 3.273782e-003, 1.969324e-002, 1.112897e-002, -1.070665e-002, 1.877832e-002, 5.847495e-002, -1.603862e-002, 3.298239e-002, 5.596733e-002, 3.943683e-002, 7.172377e-003, 3.432743e-002, 3.822896e-002, 1.218137e-002, -3.476190e-004, 1.043321e-002, -2.496111e-003, 1.219853e-002, 2.962108e-002, 1.219853e-002, -2.496111e-003, 1.043321e-002, 1.305922e-002, 1.854748e-002, -4.923245e-003, 5.872338e-002, 2.295247e-002, -1.754153e-002, 1.387778e-002, -4.113076e-003, -1.807778e-002, 5.599099e-002, -2.262939e-002, -3.620958e-002, -2.995134e-002, -3.721163e-002, 7.291566e-002, 4.756101e-002, -2.217399e-003, 2.621070e-002, -4.985927e-002, -1.273996e-002, 2.350856e-002, 4.546639e-002, -3.283508e-002, 2.798414e-002, 8.057035e-003, 1.244416e-002, -1.960268e-002, 5.918076e-003, 4.719754e-002, 5.918076e-003, -1.960268e-002, 1.244416e-002, 5.832920e-003, -1.989299e-002, -3.958788e-002, 1.319238e-002, 7.048243e-002, 5.707670e-002, 4.080419e-002, 2.980045e-002, 6.699309e-003, 1.489645e-002, 1.478385e-002, -1.136002e-002, 8.917280e-002, -8.466460e-002, -7.249204e-003, 5.045883e-002, 1.442280e-002, 3.873991e-002, -5.912013e-002, 8.930888e-002, 1.406428e-002, -4.052953e-002, -6.031822e-002, 7.490212e-003, -6.906742e-003, 1.032039e-002, 2.107211e-002, 1.032039e-002, 6.538733e-002, -2.783931e-002, 1.197160e-001, 1.744560e-002, 1.814841e-002, -3.871010e-002, 2.209409e-001, -3.871010e-002, 1.399909e-001, -4.309850e-001, 3.518652e-002, 1.547675e-001, 1.302661e-002, 1.163649e-002, -2.723927e-002, 1.163649e-002, -1.590828e-001, -1.401214e-001, -1.667667e-002, 3.043602e-002, -1.081213e-002, -3.427244e-003, 1.239881e-002, -3.427244e-003, 1.327204e-001, 9.681982e-003, -1.178598e-002, -1.231709e-002, -1.453965e-002, 8.818917e-003, 2.973794e-002, 8.818917e-003, -2.152339e-003, 6.805138e-002, -7.135788e-002, 4.699808e-002, 2.617832e-003, -6.168207e-003, 1.475986e-002, -6.168207e-003, 3.537443e-002, -5.347282e-002, -2.649288e-001, 5.006644e-002, 3.624306e-003, 4.543628e-003, 1.256254e-002, 4.543628e-003, 5.551325e-002, -1.137536e-001, 1.319195e-002, -2.217467e-002, -1.328015e-002, -1.435352e-003, 3.863805e-003, -1.435352e-003, -3.856157e-002, -8.251940e-004, -5.271996e-002, -9.214495e-003, 6.143042e-003, -1.748750e-003, -3.429676e-002, -1.748750e-003, -1.731824e-001, 1.185839e-001, 8.549729e-003, 1.549461e-001, -1.723786e-002, -2.704703e-002, 2.088391e-001, -2.704703e-002, -2.362497e-002, -1.209957e-001, -3.907883e-002, -8.396873e-003, -1.066883e-002, -1.889935e-002, -1.763979e-002, -1.889935e-002, -8.464152e-002, 5.912473e-002, -6.152843e-002, 8.715278e-003, 3.270784e-002, 2.182858e-002, -5.586860e-002, 2.182858e-002, -1.161908e-001, 8.335800e-004, 3.660325e-002, 1.030125e-002, 1.816159e-003, -1.346389e-002, -2.032031e-002, -1.346389e-002, 8.949277e-002, -6.496122e-002, 7.751842e-002, -1.632755e-001, 8.931037e-003, 5.459289e-002, 3.575180e-002, 5.459289e-002, -8.960688e-002, -1.247303e-001, 9.898544e-002, -1.069241e-001,


© ISO/IEC 2004 — All rights reserved

Copyright International Organization for Standardization
Provided by IHS under license with ISO
No reproduction or networking permitted without license from IHS
Not for Resale

4.031857e-003, 4.732848e-002, -6.993439e-002, 4.732848e-002, -6.342296e-002, 1.453212e-001, -3.242608e-003, -6.562316e-002, -1.801384e-002, 1.895098e-002, -5.335044e-002, 1.895098e-002, 2.359027e-003, -6.979652e-002, -9.286615e-002, 4.446997e-003},
{2.200903e-004, -1.413656e-003, -5.705421e-003, 3.789171e-004, 1.369509e-002, -6.577345e-004, -1.601952e-002, 3.438551e-003, -6.397287e-003, 3.438551e-003, -1.601952e-002, -6.577345e-004, 1.369509e-002, 3.789171e-004, -5.705421e-003, -1.413656e-003, -3.036752e-003, 5.458643e-003, -1.309742e-002, -1.036115e-002, 6.484625e-003, -1.597201e-002, -1.180152e-002, 1.271270e-002, -6.810381e-003, 1.873127e-002, 4.956114e-003, 2.896466e-003, 5.376322e-003, -1.150041e-002, -1.465299e-002, -6.477346e-003, 2.952831e-002, 2.249152e-002, -2.235452e-002, -1.331439e-002, -2.654149e-003, 6.164454e-003, -1.043992e-003, -5.385873e-003, -1.889655e-003, -3.217273e-004, 3.193270e-003, 1.206393e-003, -1.471119e-002, -1.509464e-002, 7.140620e-004, 5.733993e-003, 1.561550e-002, -6.891159e-003, -2.684604e-002, 1.058172e-002, 1.146271e-002, 6.121686e-003, -5.165164e-003, -3.269486e-003, -1.193558e-002, 9.726759e-003, -6.370085e-003, 1.997861e-002, 2.089885e-003, 4.759184e-003, -1.227741e-002, 8.280187e-003, -2.626291e-003, -1.433604e-002, -1.352618e-002, -1.339749e-004, 4.240518e-002, -1.560678e-003, -9.379195e-003, -1.347042e-002, 6.258324e-003, -2.327721e-002, -4.523199e-003, -1.003765e-002, 1.596683e-002, -5.705815e-003, -1.556697e-002, -1.088350e-002, -2.281637e-004, 4.513411e-003, 1.524716e-002, 2.137386e-002, 2.983009e-002, -1.307066e-002, 3.230188e-002, 4.893130e-003, 2.605298e-002, -6.461020e-003, 2.428570e-003, -1.348608e-003, -1.214051e-002, 1.790860e-002, 8.849248e-004, 9.563317e-003, 1.283319e-002, 1.828291e-002, 1.558952e-003, 2.537039e-003, 6.376339e-003, 3.223497e-002, -1.233470e-003, 5.374661e-003, -2.237680e-002, -4.029348e-002, -1.786351e-002, 2.961000e-002, 2.214044e-002, 3.027835e-002, -2.373144e-003, -6.048351e-003, 5.465204e-003, 1.139632e-002, 1.062036e-002, 7.518586e-003, 2.946800e-003, -2.613674e-002, 4.152673e-002, 8.561707e-003, -3.301844e-002, 1.593783e-002, -8.003484e-003, -1.687738e-002, 1.310644e-003, -1.682289e-003, -3.982010e-004, 8.336814e-003, 5.640138e-003, -5.360231e-003, 3.358005e-003, 9.564231e-003, -6.064427e-003, 9.564231e-003, 3.358005e-003, -5.360231e-003, -6.783572e-002, -1.341113e-002, 1.501224e-002, -6.039764e-002, -1.340857e-002, 1.434035e-002, 8.208919e-002, -2.747226e-002, 4.118844e-002, -2.074440e-002, -8.814158e-002, 3.216648e-002, -1.466563e-002, -2.499675e-002, 2.654567e-002, -7.727062e-002, 1.157568e-002, -3.728798e-002, 2.518763e-002, 7.035070e-003, -3.964943e-003, 1.249827e-002, 1.119710e-002, -4.444893e-003, -1.555815e-002, 6.432604e-003, -1.675631e-002, 2.170105e-002, 2.859572e-004, 2.170105e-002, -1.675631e-002, 6.432604e-003, 1.637750e-003, 4.557211e-002, 1.781629e-002, 1.877038e-002, 2.248645e-002, 4.205237e-002, 5.217284e-002, 2.947005e-002, 4.628020e-002, 2.083403e-002, -1.700528e-005, -1.836737e-002, 4.030577e-002, -1.171334e-002, -1.285084e-002, 9.883253e-003, -5.524126e-002, -6.875122e-002, 1.599161e-002, -5.439512e-002, -5.365034e-002, 1.067467e-002, -2.689076e-002, -3.223580e-002, -5.240529e-004, -7.979351e-004, 9.729041e-003, 1.820734e-002, -5.604051e-002, 1.820734e-002, 9.729041e-003, -7.979351e-004, -2.474787e-002, 2.922853e-002, 3.328139e-002, -5.290990e-002, -2.853003e-002, 5.731125e-003, 4.029734e-003, 3.555521e-002, 6.561741e-002, 9.057863e-002, 3.926698e-002, 3.790672e-003, -1.812595e-002, 2.754512e-002, 1.532342e-002, -1.136504e-002, -5.220616e-002, 4.548370e-002, -1.407685e-002, -8.051022e-002, 3.618740e-002, -4.904420e-002, 8.586046e-003, 2.706710e-003, 1.066215e-002, 6.020410e-003, 4.995652e-003, 1.054734e-004, -2.287348e-002, 1.054734e-004, 4.995652e-003, 6.020410e-003, -4.439524e-002, 1.428878e-002, 1.553651e-002, 1.901582e-002, 9.854678e-003, 1.130870e-002, 5.165878e-002, -8.476356e-004, 2.968851e-002, -4.941378e-002, -5.912230e-002, -1.873535e-002, 3.863532e-002, -4.741300e-002, -4.174519e-002, 6.966712e-002, -8.087523e-003, -4.965115e-002, 3.308012e-002, -7.613176e-002, -7.290557e-002, -3.355744e-002, -9.068866e-002, 6.225604e-002, 2.291602e-002, -7.315270e-003, -4.598479e-002, -7.315270e-003, 3.468735e-002, 1.061579e-001, -4.876245e-002, 9.077550e-002, -2.471127e-002, 6.601167e-002, -4.745303e-002, 6.601167e-002, -3.031363e-002, 5.760768e-002, 2.837994e-003, -1.701727e-002, -9.537820e-003, 7.842293e-002, -6.491939e-002, 7.842293e-002, -4.700207e-002, 2.475034e-001, 9.913809e-002, 4.979589e-001, 3.675486e-002, 1.373392e-002, -4.243052e-002, 1.373392e-002, -1.747693e-001, -4.526852e-002, 3.365155e-002, 5.477863e-002, 4.414145e-003, -1.822558e-002, 8.758393e-002, -1.822558e-002, 3.328290e-003, 3.585478e-002, -4.268151e-002, -4.632373e-002, 3.021246e-003, -4.830469e-002, -5.685926e-002, -4.830469e-002, 7.292513e-002, 2.053685e-002, 3.513471e-002, -1.012389e-001, -1.690426e-002, -7.654927e-004, 1.388874e-001, -7.654927e-004, -3.262439e-002, -8.055408e-002, 6.700993e-002, -8.652182e-003, -2.587093e-002, -1.113708e-003, -2.939552e-002, -1.113708e-003, -9.735946e-002, -3.490945e-003, -9.911850e-002, -9.963738e-002, -1.825067e-002, 2.665969e-002, 2.260039e-002, 2.665969e-002, -6.474778e-002, -1.302580e-001, 1.933401e-002, 5.203210e-002, 1.858979e-002, -5.647649e-002, 1.107723e-001, -5.647649e-002, -6.065937e-002, 5.182148e-002, -5.515539e-002, -3.187648e-002, 3.066228e-002, -4.313544e-002, 1.748763e-001, -4.313544e-002, -3.961052e-002, 3.437624e-002, -6.534134e-003, -5.897564e-004, 4.267373e-002, -1.469397e-002, 1.759730e-002, -1.469397e-002, 1.530916e-001, -1.795117e-003, -7.585205e-003, -1.253437e-001, -2.042472e-002, -2.838553e-002, 1.165770e-001, -2.838553e-002, -1.380375e-001, -1.617371e-001, -1.460707e-002, -3.174264e-002, 1.956154e-002, 6.022941e-003, 7.119217e-002, 6.022941e-003, -4.167792e-002, -1.713721e-002, 8.249134e-002, -1.363513e-001, -

© ISO/IEC 2004 — All rights reserved


Copyright International Organization for Standardization
Provided by IHS under license with ISO
No reproduction or networking permitted without license from IHS
Not for Resale

2.053547e-002, -2.954794e-003, 1.787462e-002, -2.954794e-003, 6.894857e-003, -3.851602e-002, -1.362744e-001, 7.117397e-003, -4.213838e-002, -1.980401e-002, 2.209421e-002, -1.980401e-002, -5.343211e-002, 3.344155e-002, -1.727382e-001, -2.168496e-002},
{-9.556267e-004, -1.044862e-003, 1.073233e-003, -3.596239e-003, 1.217568e-004, 3.565787e-003, -3.867473e-003, -8.063698e-003, 1.106342e-002, -8.063698e-003, -3.867473e-003, 3.565787e-003, 1.217568e-004, -3.596239e-003, 1.073233e-003, -1.044862e-003, 1.455876e-002, 7.847497e-003, -1.431879e-002, -1.068003e-002, -1.758512e-003, 5.420337e-003, -1.410511e-002, -8.122353e-003, -4.857329e-003, 1.672649e-002, 1.943382e-003, 1.956407e-002, 9.384005e-003, 1.396438e-002, 1.744667e-002, 8.834654e-003, -5.724175e-003, 1.882266e-002, -1.182185e-002, 1.027976e-002, -9.520551e-003, -3.089010e-002, -1.112093e-002, -4.102948e-003, 7.958401e-003, 1.967577e-002, -1.337371e-002, -7.791737e-003, -5.335010e-003, -3.149409e-003, 8.735121e-003, -6.054338e-003, 1.762277e-003, -1.573967e-002, -6.132679e-003, -2.315851e-002, -1.641082e-003, -2.759584e-002, 2.964581e-004, 7.906374e-003, -3.205074e-002, -1.881739e-002, -6.460840e-003, -2.094379e-002, -5.652454e-003, -8.800795e-003, -1.217101e-002, -1.224097e-002, 3.353870e-002, -1.045916e-002, -1.851352e-002, -1.172858e-002, -5.792154e-003, -6.208016e-003, 4.742281e-002, 3.262136e-002, -5.251462e-002, 2.763008e-002, 1.183424e-002, -2.268762e-003, 1.178883e-002, 1.714276e-002, -1.761259e-003, 7.350904e-003, 3.041908e-002, -3.826262e-002, 1.564021e-002, -1.392743e-002, 6.555102e-003, 2.419439e-002, 5.390903e-002, -1.850861e-002, -9.193318e-003, 8.117688e-003, 3.827965e-002, -1.065632e-002, 3.388709e-002, -1.715537e-002, 2.101965e-002, -9.875565e-003, 1.754894e-002, 3.885090e-003, 1.013925e-002, -4.098061e-003, 3.077597e-002, 1.553000e-002, 4.345613e-004, 7.197805e-003, 1.024009e-002, 6.462125e-003, 2.970526e-002, 2.684857e-002, 1.428900e-002, -5.006192e-003, 2.072784e-002, -7.112743e-003, 1.558776e-003, -1.346646e-002, 6.504741e-003, 4.843795e-003, -3.036228e-002, 2.684328e-002, -9.118766e-003, 1.247076e-002, 1.905917e-002, 1.585959e-002, -2.718384e-002, -1.511303e-002, -8.361164e-004, 4.494641e-002, 3.526967e-003, -8.288973e-003, 7.610080e-003, 1.284229e-002, 4.556718e-003, 1.063718e-002, 2.096335e-002, 1.063718e-002, 4.556718e-003, 1.284229e-002, -3.596355e-002, 7.123991e-002, -2.206272e-002, 3.026724e-002, -3.185333e-002, -9.413142e-003, -1.132515e-002, 3.523309e-003, -7.414713e-005, 9.220596e-003, 3.388102e-002, -9.456715e-002, 3.578891e-003, -2.859997e-004, 5.248759e-002, 9.096214e-003, 5.625289e-002, -5.174051e-002, -5.897576e-002, -1.093319e-001, -3.025059e-002, 1.739715e-002, 8.824963e-003, -1.278848e-001, 1.210091e-002, -9.702677e-003, -3.148911e-003, 1.914829e-002, -2.459584e-002, 1.914829e-002, -3.148911e-003, -9.702677e-003, 2.798578e-002, 5.137260e-002, 4.048759e-002, 1.599724e-002, -2.693499e-002, 4.991465e-002, -1.553440e-002, 3.227357e-003, -1.016315e-001, -2.959214e-003, 9.297970e-003, 6.197310e-002, -7.774776e-003, -7.968785e-003, -1.644248e-003, 2.011253e-002, -4.476411e-002, -1.790070e-001, -1.004145e-001, -2.413050e-002, 1.340417e-001, -1.032858e-001, -5.247737e-002, -7.585977e-002, -5.890597e-003, 2.300085e-003, 6.866958e-004, 6.710523e-003, 1.713253e-002, 6.710523e-003, 6.866958e-004, 2.300085e-003, 3.512669e-003, 1.503811e-002, -2.086869e-002, -2.320519e-003, -1.333140e-002, 3.812269e-003, -2.622229e-002, -2.465796e-002, 2.945906e-002, 1.065845e-003, -3.176712e-002, -5.202543e-002, 4.055221e-002, 1.742814e-002, 7.588491e-002, -7.090725e-003, -5.158624e-002, -6.863543e-002, -3.577948e-002, 3.365641e-002, 1.132794e-001, -2.653326e-002, 4.395288e-002, 1.313188e-002, -1.477602e-002, 7.234121e-003, 1.705999e-002, -5.903149e-004, 7.853519e-003, -5.903149e-004, 1.705999e-002, 7.234121e-003, 3.792177e-002, 3.015795e-003, -1.880682e-003, -2.223203e-002, 2.571106e-002, -2.123271e-002, 1.205035e-002, 4.720528e-003, 3.778363e-002, 4.750523e-003, 2.649747e-002, -6.971700e-002, 4.078193e-002, -3.562898e-002, 2.681138e-002, 5.898846e-002, -2.090951e-002, 1.143747e-002, 6.190238e-002, -2.877319e-002, 1.712106e-002, 3.828753e-002, 6.713729e-002, -7.296265e-003, 5.967571e-003, -2.816852e-002, 3.827118e-002, -2.816852e-002, 1.270690e-001, 3.783518e-002, -1.354692e-001, 6.786830e-002, 1.730873e-002, -6.082802e-002, 2.939235e-001, -6.082802e-002, -1.181186e-002, -1.053782e-001, 6.577844e-002, 1.856645e-001, -1.869477e-002, 2.170658e-002, -5.198278e-002, 2.170658e-002, 4.604924e-002, -1.791729e-001, -6.480930e-002, -8.647100e-002, -7.398082e-003, 2.895918e-002, 5.786250e-003, 2.895918e-002, 1.170776e-002, -4.854858e-003, 6.794947e-002, -1.398915e-001, -2.911418e-002, -4.786121e-003, -4.119982e-002, -4.786121e-003, 3.518150e-002, -6.554670e-002, -2.670822e-003, 1.353470e-001, 1.344795e-002, 1.333796e-004, 5.061637e-002, 1.333796e-004, 5.340742e-002, 4.134758e-002, 6.680911e-002, -2.241414e-002, 3.731209e-002, 2.824841e-002, 3.025694e-002, 2.824841e-002, -1.189388e-001, -7.417170e-002, 1.108443e-001, 1.360128e-001, 8.816745e-004, 9.787213e-003, 6.294089e-002, 9.787213e-003, 3.960636e-002, -4.746261e-002, -9.627951e-002, -1.314635e-001, 4.059854e-003, -1.124296e-002, -2.668523e-002, -1.124296e-002, 4.650983e-002, 6.146792e-002, -6.968022e-002, -1.190873e-001, -2.870638e-002, -2.021775e-002, -5.522054e-002, -2.021775e-002, -9.814906e-002, 3.031767e-002, 4.385651e-003, 8.220697e-002, -1.477657e-002, -7.107918e-002, 3.417845e-002, -7.107918e-002, -1.612472e-001, 1.696834e-001, 1.130153e-002, 6.315932e-002, -1.391215e-002, -1.643834e-002, -9.695415e-002, -1.643834e-002, -1.368659e-002, 1.056157e-001, -4.962635e-002, -1.367786e-001, 6.724002e-003, -1.362499e-002, 3.364904e-002, -1.362499e-002, -4.989135e-002, 9.978724e-002, -6.284643e-002, -6.615673e-002, 1.203193e-002, 4.333325e-002, -9.307992e-002, 4.333325e-002, 2.576013e-002, -1.183983e-001, 1.652604e-001, 3.071175e-002, -


© ISO/IEC 2004 — All rights reserved

Copyright International Organization for Standardization
Provided by IHS under license with ISO
No reproduction or networking permitted without license from IHS
Not for Resale

6.981197e-004, -9.740937e-003, 7.886815e-002, -9.740937e-003, -1.202086e-002, -2.315200e-001, 1.498550e-002, -3.453927e-002, 1.461081e-002, -3.240712e-002, 6.018351e-002, -3.240712e-002, -1.329148e-001, 7.177655e-002, 2.037776e-002, 2.867418e-002},
{7.557587e-004, 1.494563e-003, 3.341638e-003, -4.114966e-004, -3.456672e-003, -5.107895e-003, 1.527728e-002, -1.286032e-003, -4.874327e-003, -1.286032e-003, 1.527728e-002, -5.107895e-003, -3.456672e-003, -4.114966e-004, 3.341638e-003, 1.494563e-003, -2.587338e-003, 9.835786e-003, 2.823476e-003, -4.799347e-003, -1.749431e-002, -1.547309e-002, 3.191151e-003, 2.545688e-002, -1.075112e-002, -1.574651e-002, -1.097163e-003, -7.892520e-003, -1.170518e-002, 7.501126e-003, 1.430911e-003, -1.080518e-003, 1.273673e-002, -1.270947e-002, 1.100070e-002, 1.321999e-002, 1.014780e-002, 1.378009e-004, 8.048546e-003, 2.307094e-002, -1.461967e-003, -1.088297e-002, -2.365741e-002, -1.654713e-002, -1.094966e-002, -5.224906e-003, 1.856655e-002, -3.021164e-003, 6.640303e-003, 8.853605e-003, -2.763811e-002, 3.679156e-003, -1.625902e-003, -9.465377e-003, 6.727274e-003, -3.519654e-003, 1.180582e-002, -2.549960e-004, -9.549090e-003, 8.080683e-003, 1.779788e-003, -3.598797e-002, -2.359895e-002, 2.594878e-003, 1.109879e-002, -7.249963e-003, -1.568468e-002, -1.833424e-002, 4.723425e-003, -1.335751e-002, -1.479276e-002, -1.284504e-002, -1.196548e-002, -8.640134e-004, 1.279315e-002, 9.433895e-003, 7.397082e-003, 1.602047e-002, 9.460344e-003, -1.702476e-002, -2.119803e-002, -2.150100e-003, -7.706249e-003, -7.088500e-003, -3.784936e-003, -2.600017e-002, 6.401574e-003, -3.841076e-002, 1.244517e-002, -1.933245e-002, 5.586049e-003, -5.214207e-003, -3.407475e-002, -1.111964e-002, -3.937961e-003, 1.421445e-003, -1.302669e-002, -5.855732e-003, -9.958028e-004, 3.805872e-003, -5.210421e-003, 3.341108e-002, -1.636420e-002, 1.491855e-002, -2.475335e-002, 3.749080e-003, -6.979195e-003, -4.807719e-002, 2.296831e-002, -2.879172e-002, 5.326063e-003, 2.939557e-002, -7.239625e-003, -1.510256e-002, -2.649585e-002, -2.157897e-002, -2.667245e-003, -1.477334e-002, -2.166132e-002, 1.952557e-002, 2.836447e-002, -1.437794e-003, -2.757102e-002, -2.025186e-002, 4.744368e-002, 1.761232e-002, -2.990412e-002, -3.039121e-002, 6.890730e-004, 1.715330e-002, 3.348336e-002, -1.625264e-003, -3.296082e-002, -1.625264e-003, 3.348336e-002, 1.715330e-002, -9.213715e-003, 6.991267e-003, -3.598157e-002, -3.919820e-002, 4.875163e-002, -3.405877e-003, 2.341189e-002, -6.116625e-002, 2.275148e-002, 1.233741e-002, 8.510804e-003, 4.906410e-002, -4.649690e-003, -3.014290e-002, -1.249199e-003, 8.598354e-002, -1.814860e-003, 5.782642e-002, 1.297471e-002, 7.110657e-003, 7.745914e-002, 1.161221e-001, 1.053521e-001, 4.348757e-002, -4.656386e-003, 7.673541e-004, 3.863494e-003, -2.767041e-002, 6.152279e-002, -2.767041e-002, 3.863494e-003, 7.673541e-004, 1.739411e-002, -1.074788e-002, -3.300106e-003, -1.381209e-002, -1.814753e-002, -1.027388e-002, 1.827306e-002, -2.924704e-002, 4.490889e-003, 2.467473e-002, -9.787935e-003, -8.888776e-002, 4.544455e-002, -5.565327e-002, 3.042043e-002, 3.055381e-002, -5.709971e-002, -4.897407e-002, 6.313848e-002, 7.430200e-002, 1.151909e-001, -9.853425e-002, -1.123599e-002, 5.162025e-002, 3.585962e-003, -9.449254e-003, 3.723262e-003, 1.263704e-002, 3.279871e-002, 1.263704e-002, 3.723262e-003, -9.449254e-003, 2.520284e-002, -3.437046e-002, 1.698493e-003, -2.106388e-002, 1.272413e-002, 5.350345e-002, 3.419267e-002, 1.533900e-002, 2.829320e-002, -1.696052e-002, 4.625308e-002, -2.033583e-002, -6.314849e-002, -4.350198e-002, 3.073671e-002, 5.110850e-002, 3.176190e-002, 4.534747e-002, 5.672422e-002, 3.437410e-002, -6.307433e-002, 2.407720e-003, 4.680828e-002, 4.715800e-002, 1.137109e-003, -1.460230e-003, 1.790999e-002, -1.219718e-002, 3.806256e-002, -1.219718e-002, 1.790999e-002, -1.460230e-003, 1.065935e-002, 1.997738e-002, -2.247174e-002, 7.966132e-002, 1.157381e-002, -4.070076e-002, -4.988918e-002, -4.101299e-002, 1.472970e-002, -1.784365e-002, 6.546122e-002, 5.593850e-002, 3.998084e-003, 2.288998e-002, -1.028899e-001, -5.002594e-002, -1.162181e-002, 1.213933e-002, 1.779990e-002, -4.738520e-002, -2.009151e-002, 6.680367e-002, 6.561687e-002, 8.619770e-003, -2.540703e-002, -6.599056e-002, 7.189699e-002, -6.599056e-002, -3.301550e-002, 2.263679e-002, -3.406375e-003, -2.362939e-001, 3.905270e-002, -6.713334e-002, -4.517929e-002, -6.713334e-002, 2.058526e-002, 1.543552e-001, -1.880037e-002, -2.066774e-001, -2.555824e-002, -3.574914e-002, 1.804351e-001, -3.574914e-002, 1.406423e-001, 5.892568e-002, 5.275791e-002, 1.814164e-001, -1.069802e-002, 1.674426e-002, -3.964035e-002, 1.674426e-002, 3.761713e-002, -7.456272e-002, -6.979629e-003, 8.456210e-003, 3.082890e-002, -2.535965e-002, -2.074346e-002, -2.535965e-002, -6.017805e-002, -4.320164e-003, -3.915421e-002, -2.641355e-002, -4.378550e-002, -4.615345e-002, -3.974302e-002, -4.615345e-002, 3.174538e-003, -3.884543e-002, -1.167257e-001, 1.344683e-001, 1.553395e-002, 2.905818e-002, -3.036004e-002, 2.905818e-002, -3.925157e-002, 8.484787e-002, -3.689803e-002, -8.150049e-002, 1.606593e-002, 2.964970e-002, 1.545283e-002, 2.964970e-002, -4.281966e-002, -9.016255e-002, 1.662793e-002, 3.614440e-002, 3.717485e-002, 6.218737e-003, -4.500024e-002, 6.218737e-003, 1.450965e-001, -2.557634e-001, 5.724895e-003, 5.665597e-003, -2.330490e-003, -4.074735e-003, -8.934789e-002, -4.074735e-003, -1.922721e-001, 5.280737e-002, -6.122735e-002, -6.847375e-002, 4.479830e-003, -6.906863e-003, -3.168639e-002, -6.906863e-003, -1.790263e-001, -4.240954e-002, -1.038525e-001, 1.158234e-001, 5.073166e-002, -3.696970e-002, -6.506189e-002, -3.696970e-002, 5.457460e-002, 1.994823e-001, -4.236996e-003, -1.166792e-001, -1.465279e-002, 5.049268e-003, -2.199821e-002, 5.049268e-003, -1.356741e-001, 1.286870e-001, 1.764615e-001, -3.235411e-002, -1.660561e-002, 2.170386e-002, -1.867108e-002, 2.170386e-002, -2.797209e-002, -4.835763e-002, -1.231516e-001, -2.572617e-002, -

© ISO/IEC 2004 — All rights reserved


Copyright International Organization for Standardization
Provided by IHS under license with ISO
No reproduction or networking permitted without license from IHS
Not for Resale

3.549697e-002, 6.828818e-003, -2.679208e-002, 6.828818e-003, -5.914791e-002, -9.705588e-003, -1.136627e-001, -3.072467e-002, -1.857742e-002, 5.393155e-003, 1.187022e-002, 5.393155e-003, -1.107119e-001, 7.837125e-002, -2.008749e-002, 1.378644e-001},
{4.530018e-005, -1.128628e-004, -1.897704e-003, -4.371407e-004, -9.290699e-003, 2.160505e-003, 7.985411e-003, -7.445264e-003, 6.890347e-003, -7.445264e-003, 7.985411e-003, 2.160505e-003, -9.290699e-003, -4.371407e-004, -1.897704e-003, -1.128628e-004, -3.169990e-003, -1.941398e-003, -1.692740e-002, -6.277321e-003, 5.741157e-003, 3.196669e-003, 1.261234e-002, -6.787555e-003, 2.078977e-003, -7.848910e-003, -1.589713e-002, 1.081979e-002, 7.119413e-003, 4.014795e-003, -5.967959e-003, 7.217441e-003, -2.436977e-002, -7.285561e-003, -1.026860e-002, -2.370557e-003, -5.241625e-003, 8.987068e-003, 2.025819e-004, 2.395816e-002, 5.020924e-003, 1.196423e-002, -1.290021e-003, -7.747899e-003, -2.792456e-003, 8.320410e-004, 1.066318e-002, -2.224959e-002, 2.369587e-002, -1.984674e-002, -3.848477e-004, 8.546754e-003, 1.413896e-002, -2.770856e-003, 1.824324e-003, 7.891345e-004, 4.847800e-002, -8.805309e-003, -2.629041e-002, 3.096358e-002, 9.502276e-003, 1.256265e-002, 3.456443e-003, -3.408356e-003, 1.075193e-002, -1.299821e-002, -6.754235e-003, -1.089564e-002, 1.027213e-002, 2.190307e-002, 5.048093e-003, 2.820399e-002, -1.363289e-002, 7.688306e-003, -1.093606e-002, 1.872026e-003, 4.385731e-002, 2.023133e-003, -3.976894e-002, -1.315992e-002, -6.821847e-003, -6.868361e-003, -1.095587e-002, -1.123601e-003, -1.272223e-002, 7.728763e-003, -1.743987e-002, -4.793306e-002, 1.644768e-002, -2.701360e-002, 7.924750e-003, -2.757698e-002, 5.805575e-003, 1.454318e-002, -3.261091e-002, -6.838838e-003, -3.881785e-003, -2.864496e-003, -7.568782e-003, 1.283642e-003, -2.554128e-002, -4.991855e-003, -3.752611e-002, 9.815980e-003, -1.703938e-002, -1.584833e-002, 1.029064e-002, -3.531921e-002, -1.497801e-002, 2.973083e-003, -1.679735e-003, -2.026403e-002, -3.516640e-002, -7.099849e-003, -3.333141e-002, 6.694717e-003, -3.040124e-002, 2.228393e-002, -2.396020e-002, -1.260148e-002, 3.797953e-002, 3.374669e-002, 2.591034e-002, 3.715140e-002, -1.213269e-002, 2.720705e-002, -2.304833e-002, -3.444199e-002, 1.109706e-002, 1.285135e-003, 4.839504e-003, -7.291684e-003, -8.004808e-003, -7.291684e-003, 4.839504e-003, 1.285135e-003, 2.587042e-002, 1.454628e-002, -4.942828e-004, -4.552417e-002, 5.047462e-003, -3.030196e-002, -2.974853e-002, 1.349296e-002, -2.808714e-002, -7.740009e-002, 3.672891e-002, -7.338237e-003, -5.054419e-002, 1.133492e-002, -2.378876e-002, 3.962405e-002, 1.269557e-002, 3.040047e-002, -3.308743e-003, 1.330733e-001, -6.885786e-002, -2.605215e-003, -7.277341e-003, 6.962200e-002, -5.132202e-003, -1.867733e-003, 7.191198e-003, -1.491015e-002, -1.762920e-002, -1.491015e-002, 7.191198e-003, -1.867733e-003, 1.940722e-002, 5.541263e-002, -1.846759e-002, -1.979939e-002, -2.198939e-002, 3.734132e-002, 1.921955e-002, -3.206170e-002, 1.111979e-002, 1.549753e-002, -2.076082e-002, -3.159080e-002, -1.085440e-002, 3.179547e-002, -6.275512e-002, -2.477353e-002, 3.623671e-002, 9.805530e-002, -1.112078e-003, 7.884750e-002, 4.911490e-005, 2.796007e-002, -3.964693e-003, -4.655407e-002, -6.294301e-003, 9.661423e-003, -6.191401e-003, -8.791912e-003, -3.124174e-002, -8.791912e-003, -6.191401e-003, 9.661423e-003, -6.909665e-003, -1.870815e-002, -2.482955e-002, 2.163046e-002, -4.252488e-002, 4.886492e-002, 8.654051e-003, 7.483848e-003, -4.243272e-002, 7.835316e-002, -2.847246e-002, -5.806553e-004, 7.150888e-003, -6.623253e-004, -4.495413e-002, 1.002762e-002, -7.564090e-002, -2.023676e-002, -3.826245e-002, 3.659055e-002, 2.948407e-002, -7.318709e-002, -2.529298e-002, 1.510914e-001, 3.747460e-004, 8.138042e-003, 2.629646e-003, -1.811403e-002, -6.841430e-003, -1.811403e-002, 2.629646e-003, 8.138042e-003, 3.456938e-002, 5.266635e-003, 4.854254e-002, -4.143677e-002, -5.294903e-002, 2.828127e-002, 6.242905e-002, -2.157902e-002, -1.955442e-002, -2.695519e-003, -7.276612e-002, 2.528738e-003, 9.940350e-005, -4.855111e-002, 4.070693e-003, 6.379101e-002, -4.164171e-002, 7.967355e-002, 3.704089e-002, -1.676613e-002, 3.403007e-002, -7.156520e-002, -5.230870e-002, 5.397348e-002, -1.899540e-003, 1.144407e-002, -2.406197e-002, 1.144407e-002, 3.321381e-002, -5.442501e-002, -1.475517e-001, 4.858239e-002, 3.732659e-003, 5.679747e-002, 4.345071e-002, 5.679747e-002, 1.468906e-001, 3.128141e-001, -8.946721e-003, -5.583474e-002, -6.746521e-003, -5.917506e-003, 2.764207e-001, -5.917506e-003, -9.583054e-002, -1.306107e-002, 2.122472e-002, -1.777020e-002, 2.314277e-002, 2.194618e-002, -5.469777e-004, 2.194618e-002, -3.543075e-002, -5.131060e-002, -1.041118e-001, -2.687303e-002, -2.333878e-002, 5.047952e-003, 1.604044e-002, 5.047952e-003, -2.498860e-002, 1.418113e-002, -6.128635e-002, -3.706838e-002, 3.260272e-002, -1.441848e-002, 7.041576e-002, -1.441848e-002, 3.284118e-003, -1.302425e-003, 2.078705e-001, 9.277442e-002, -3.193329e-002, 6.930838e-003, 3.090637e-002, 6.930838e-003, -6.639194e-002, 1.754938e-001, -2.409165e-002, 4.956311e-002, 1.040485e-002, -2.228014e-003, 6.122783e-002, -2.228014e-003, 2.715643e-002, -1.984124e-001, 1.428696e-001, 1.047126e-001, 4.219201e-002, -1.027761e-002, 8.152201e-002, -1.027761e-002, -4.733657e-002, 9.676736e-002, 9.837071e-002, -3.642895e-002, 1.321098e-002, -1.716267e-002, -6.793842e-002, -1.716267e-002, 1.156360e-002, 8.348113e-002, -8.739370e-002, -1.784821e-001, 2.066712e-002, -1.086595e-002, 6.622910e-002, -1.086595e-002, 6.749935e-002, -1.146996e-002, 1.697717e-001, 7.989278e-003, -3.870293e-002, -3.354055e-002, 3.289984e-002, -3.354055e-002, -3.931471e-002, 7.926264e-002, 2.388080e-002, 7.295230e-002, -1.290862e-002, 5.053394e-003, -1.507946e-002, 5.053394e-003, -1.549238e-002, -1.196388e-002, 3.989757e-002, 5.557019e-002, -4.878867e-002, -2.595740e-002, 3.923916e-002, -2.595740e-002, 7.106787e-002, -7.295843e-002, -5.337303e-002, -9.741192e-003,


© ISO/IEC 2004 — All rights reserved

Copyright International Organization for Standardization
Provided by IHS under license with ISO
No reproduction or networking permitted without license from IHS
Not for Resale

3.199707e-003, 1.025615e-002, -1.594243e-001, 1.025615e-002, 3.355777e-002, 2.217390e-002, -1.349899e-001, -4.423229e-002, 1.521085e-002, 1.359833e-002, -5.284229e-002, 1.359833e-002, 3.555996e-002, -8.626467e-003, -2.645233e-001, 2.081515e-001},
{-6.171356e-004, 2.813087e-003, -1.328112e-003, 1.328475e-003, -5.855203e-003, -5.387582e-003, 3.565295e-003, -4.140554e-004, -2.916358e-002, -4.140554e-004, 3.565295e-003, -5.387582e-003, -5.855203e-003, 1.328475e-003, -1.328112e-003, 2.813087e-003, -8.836333e-003, -1.167006e-002, -8.395414e-003, -9.817436e-003, -1.827613e-002, -2.236506e-002, 4.547529e-003, -1.603443e-002, -1.070024e-002, 1.524547e-002, -1.377363e-003, -1.455443e-002, -9.443355e-003, -4.531058e-003, 9.511573e-004, 4.534680e-003, -4.014643e-003, 9.054689e-004, 5.108059e-004, -1.499228e-002, 1.090538e-002, -1.980434e-002, -1.224965e-002, 2.654195e-002, -2.178671e-002, 1.324390e-002, -5.002680e-003, -1.927501e-003, -2.273636e-002, -2.924294e-002, -2.641525e-002, 1.935823e-002, 1.218201e-002, -9.696090e-003, 2.032215e-002, 2.483674e-002, -9.919642e-003, -7.312610e-003, 2.481091e-003, 1.875347e-002, 1.380695e-002, 1.654939e-002, -2.519513e-002, 3.026280e-002, -1.236468e-002, 1.939491e-002, -9.074263e-003, -2.678729e-002, 3.232954e-003, 2.224583e-002, 8.281405e-003, -3.869013e-003, -8.101508e-004, 1.770005e-002, 1.207923e-002, -3.822710e-002, 4.789393e-002, -1.032970e-002, 7.379005e-003, 2.222369e-002, 4.679484e-002, -4.451770e-003, 6.111279e-003, 2.632657e-004, 6.427756e-003, 3.002885e-002, 3.427535e-002, -1.370986e-002, -1.062732e-002, 9.240878e-003, 1.024753e-003, -1.484194e-002, 1.578999e-002, 1.528323e-002, -8.256091e-003, 2.667154e-003, 6.332893e-003, -4.522368e-002, 2.273835e-002, 1.102074e-002, 2.990152e-003, 3.245865e-003, 2.337479e-002, -2.099602e-002, 7.232938e-003, -1.819117e-002, 5.950660e-003, -3.097581e-002, -4.077268e-003, 3.288852e-002, 2.106815e-002, -2.215865e-002, -3.435914e-002, -2.833318e-002, 1.730705e-002, 3.632842e-002, -1.939163e-002, -1.394933e-002, -1.954134e-004, 2.164734e-002, 2.951529e-002, 1.425489e-002, -1.280337e-003, 2.043026e-002, 2.843468e-002, 2.604736e-002, 3.319212e-002, -3.351997e-002, 8.302246e-003, 1.447276e-002, 7.338363e-003, -2.226926e-002, -5.310630e-003, -5.042768e-003, 8.789219e-003, -1.231559e-002, 1.389968e-002, -1.231559e-002, 8.789219e-003, -5.042768e-003, 4.934910e-003, -2.116332e-002, -3.569320e-002, 1.381680e-002, -1.619841e-002, 4.368311e-002, -9.439160e-003, 5.571587e-002, -4.591118e-002, -6.236368e-002, -1.448539e-002, 2.701547e-002, 3.629094e-002, -2.722841e-002, 2.430640e-002, -2.181748e-002, 1.786124e-002, -7.112104e-002, 2.776060e-002, 9.041613e-002, -4.491920e-002, 1.102613e-001, 1.299119e-002, -1.243428e-001, 1.112954e-003, 4.647765e-003, 5.149424e-003, -5.503176e-003, -1.886314e-002, -5.503176e-003, 5.149424e-003, 4.647765e-003, 2.681345e-003, 2.944974e-002, 1.978206e-003, 6.985206e-002, 1.702696e-002, 5.120884e-002, -2.005152e-002, 3.481079e-002, 2.162232e-002, -5.293599e-002, 1.149575e-001, -2.705994e-002, -1.077670e-002, 1.142573e-002, -6.441375e-002, -3.732859e-002, 4.948861e-002, -1.186174e-001, -5.302224e-002, -5.932727e-002, 4.837316e-002, 9.546523e-002, 1.992741e-002, 3.818100e-002, 2.853724e-003, -3.282892e-003, 7.054106e-003, 3.774036e-002, 3.222909e-002, 3.774036e-002, 7.054106e-003, -3.282892e-003, 3.047099e-002, 1.203031e-002, -6.141890e-002, -2.255512e-002, -2.114848e-002, 9.750498e-003, 1.104799e-002, 1.992589e-002, 1.519461e-002, 5.557327e-002, 2.069928e-002, 5.960069e-002, -9.978020e-002, 1.790016e-002, 8.542263e-002, 2.996698e-002, -2.276552e-002, 4.716999e-002, -2.521308e-002, -5.160136e-003, -3.598520e-002, 7.000735e-002, -1.416996e-002, 3.294562e-002, 7.268170e-004, 1.769680e-002, 1.109515e-002, -1.380537e-003, 1.722543e-002, -1.380537e-003, 1.109515e-002, 1.769680e-002, 6.446765e-002, -3.627151e-002, -4.562247e-002, 4.368172e-003, -1.451115e-004, -2.730247e-002, -3.831437e-002, 2.575305e-002, -1.927517e-003, -1.991366e-002, 1.018101e-001, -2.485207e-002, -2.231423e-002, -3.863406e-002, -9.617763e-003, 1.908113e-002, 1.564272e-002, 1.001897e-003, 7.472014e-002, 4.142142e-002, 1.458674e-003, 5.748122e-002, 1.328166e-002, -4.796625e-003, 8.034630e-004, -1.665316e-002, 8.372555e-003, -1.665316e-002, -7.776882e-002, 9.617332e-002, 1.160029e-002, -1.223071e-001, -9.576928e-003, 2.089468e-002, 9.000552e-002, 2.089468e-002, -1.345090e-001, 1.180439e-001, 5.636366e-003, 1.167728e-001, 4.607918e-002, -1.753095e-002, -1.612293e-001, -1.753095e-002, 7.332987e-002, -5.933153e-002, -5.830065e-002, -5.635397e-002, -3.998464e-002, -4.211663e-002, 6.473104e-002, -4.211663e-002, -5.272816e-002, 7.175711e-002, -6.836537e-002, -3.457175e-002, -1.297895e-002, 3.004074e-002, 2.307934e-002, 3.004074e-002, -1.035601e-001, -4.973652e-002, 1.885517e-001, -8.493714e-002, 1.644179e-002, 2.511176e-002, -9.610066e-002, 2.511176e-002, 1.581218e-001, -4.902881e-002, 3.311483e-002, -8.668198e-002, 6.882484e-004, -1.782892e-003, -1.298128e-001, -1.782892e-003, 1.009927e-002, -1.127802e-001, -7.789055e-002, 3.482211e-002, -5.669838e-003, 2.293554e-002, 2.638528e-002, 2.293554e-002, -6.851790e-002, -7.722877e-002, -1.549713e-001, 1.070230e-001, -1.256253e-002, 1.201373e-002, -7.996874e-002, 1.201373e-002, -9.372555e-002, -1.077323e-001, 1.995264e-001, 6.826992e-002, 8.246544e-003, 7.764566e-002, -1.106475e-001, 7.764566e-002, -6.690120e-002, -3.710560e-003, -5.836505e-002, -7.575849e-002, -7.324650e-003, 4.123162e-002, -4.245552e-002, 4.123162e-002, 3.748531e-002, -1.215848e-001, -7.454086e-002, 1.580317e-001, -3.711468e-002, -1.985907e-002, 1.453680e-003, -1.985907e-002, -6.973983e-002, 3.003200e-001, -3.798706e-003, -9.185189e-002, 2.663960e-003, -2.046158e-002, -1.020443e-002, -2.046158e-002, 2.055533e-002, -1.226560e-001, -3.725166e-002, -4.510392e-002, 4.505754e-003, -2.172177e-002, 8.467118e-002, -2.172177e-002, -1.332319e-001, -3.945051e-003, -1.786428e-001, -4.260620e-002,

© ISO/IEC 2004 — All rights reserved


Copyright International Organization for Standardization
Provided by IHS under license with ISO
No reproduction or networking permitted without license from IHS
Not for Resale

8.222211e-003, -3.595969e-002, -3.366186e-003, -3.595969e-002, -1.444815e-001, -1.438803e-002, -8.202759e-002, -5.848392e-002, 3.694393e-002, -2.200853e-002, 3.751020e-002, -2.200853e-002, 1.257093e-002, -5.614100e-002, -1.054404e-001, -1.480908e-002}, {-1.427709e-004, -9.142002e-004, 2.438491e-003, -1.823411e-003, -1.058446e-003, -1.956307e-004, 4.119343e-003, -9.776299e-004, -1.341010e-002, -9.776299e-004, 4.119343e-003, -1.956307e-004, -1.058446e-003, -1.823411e-003, 2.438491e-003, -9.142002e-004, 5.876755e-004, 1.752420e-003, -7.792270e-003, 4.519895e-004, 7.638958e-003, 6.645225e-003, 1.280136e-002, -1.058572e-002, -1.736699e-002, -7.813609e-003, 5.095044e-003, 2.259655e-002, 6.611085e-004, 3.726547e-003, -1.099312e-002, 2.514362e-003, 4.255983e-002, -5.639073e-003, -6.910009e-003, -1.857711e-003, 2.047838e-002, -6.584205e-003, -8.638587e-003, -7.390280e-003, -7.172856e-003, 2.800614e-003, 2.901378e-003, -1.731648e-002, -1.249185e-002, -1.153775e-002, -1.691795e-002, -1.219082e-002, -9.829806e-003, 8.972455e-003, -7.173894e-003, 5.839077e-004, -5.800645e-003, 4.006827e-003, -1.331025e-002, -3.053215e-004, -1.255834e-002, 5.023987e-003, -6.868960e-003, 5.120679e-003, 1.288705e-002, 4.840373e-003, 3.311545e-004, -1.105308e-002, -6.346373e-003, -8.745071e-003, 1.624324e-002, 3.248885e-002, 2.421265e-002, 5.821390e-003, 1.179955e-003, 1.030051e-002, 3.336739e-003, 3.922702e-002, -5.016644e-003, 1.951214e-002, 9.201515e-003, 1.545341e-002, 2.128582e-003, 1.300069e-002, -3.393140e-003, 5.774290e-003, 1.425421e-002, 1.507650e-002, 1.433134e-002, 1.306268e-002, -7.480958e-003, 1.174508e-002, 1.719805e-002, -2.144140e-002, -8.418941e-003, -1.404482e-002, 2.742671e-002, 2.440319e-002, -5.373770e-004, 7.402218e-003, 1.135671e-002, -1.583568e-002, -3.188358e-003, 5.608167e-003, 4.937007e-004, 1.712225e-002, -2.428472e-002, 2.439479e-002, -1.560108e-002, -3.440572e-003, 1.693052e-002, 7.760923e-003, 3.535460e-002, 1.782507e-002, 6.456418e-003, -1.709027e-002, 4.236824e-003, 1.986095e-002, 2.129296e-003, -4.052014e-003, -7.470991e-003, 1.102928e-002, -3.732473e-003, 2.295636e-002, -7.792174e-003, 4.490477e-002, 1.923809e-002, -1.845951e-002, 1.823962e-003, 8.657797e-003, -1.792655e-002, -7.308924e-003, -1.334679e-002, -1.773213e-004, 6.980384e-003, -9.744982e-003, 1.949892e-002, -9.744982e-003, 6.980384e-003, -1.773213e-004, -7.534062e-002, -1.155498e-002, 2.731261e-002, -4.297064e-002, 1.084557e-002, -2.163690e-002, -1.778444e-002, 1.863645e-002, -4.124632e-002, -2.812963e-002, -2.343779e-002, -2.378576e-002, -1.443508e-003, -2.902477e-002, 5.150374e-002, 9.745232e-002, -1.006042e-002, -8.520500e-003, -3.622640e-002, 7.124507e-002, -6.488091e-003, -2.738746e-002, 3.344162e-003, -2.548114e-002, 5.704702e-003, 6.758393e-003, 1.105733e-002, 1.073693e-002, 3.991124e-002, 1.073693e-002, 1.105733e-002, 6.758393e-003, -1.162836e-002, 1.286313e-002, -2.312425e-002, 5.951778e-002, 1.444579e-002, 1.704726e-002, 9.606765e-003, -5.389838e-002, 2.523317e-003, 1.924735e-002, -1.384619e-002, -3.822213e-002, 3.500258e-002, -3.112360e-002, -6.145695e-002, 4.427683e-002, 4.152327e-002, -7.706255e-003, -3.291970e-002, 6.366620e-003, -6.491570e-003, -2.427053e-002, -1.373597e-002, 4.410674e-002, 1.019772e-002, 2.914691e-003, -1.007786e-002, -2.974690e-004, 8.738239e-003, -2.974690e-004, -1.007786e-002, 2.914691e-003, -3.720985e-002, -3.193291e-003, -1.272541e-004, 3.752906e-002, -2.860801e-002, 2.804224e-003, -5.243627e-003, -1.756404e-002, -1.886643e-002, -2.018090e-002, -7.346364e-002, -5.283832e-002, 1.781851e-004, -1.013534e-002, 2.954868e-002, 3.665518e-002, 1.951483e-002, -1.131454e-002, -2.482660e-002, -3.002600e-002, 3.583940e-002, 7.351168e-002, 8.268458e-003, 2.629133e-002, -2.698396e-003, 2.394485e-003, -5.786344e-003, -4.132718e-003, 1.762905e-002, -4.132718e-003, -5.786344e-003, 2.394485e-003, -6.519983e-002, -1.959886e-002, 8.386238e-003, 4.739162e-002, 1.093328e-002, -2.625338e-003, 2.220250e-004, 1.622770e-002, -8.733566e-002, 2.704878e-002, -3.976069e-002, -1.232408e-002, -5.096965e-002, -4.774373e-002, -6.639910e-003, -4.991469e-002, -2.736318e-002, 5.159652e-003, -1.256497e-002, -7.786454e-003, -6.393194e-002, -6.082363e-002, -5.270047e-002, -7.573113e-003, 1.773586e-002, -2.065689e-002, 3.962057e-002, -2.065689e-002, 8.735024e-002, -3.606182e-002, 7.322166e-002, -4.955424e-002, -5.341833e-002, -2.348110e-002, 3.756715e-002, -2.348110e-002, -1.684504e-001, 2.474583e-001, 3.370209e-002, -1.607614e-001, 4.034530e-002, -9.726698e-003, 4.812412e-002, -9.726698e-003, 1.926843e-001, -4.152718e-001, 5.188150e-003, 1.991009e-001, -1.872033e-002, -7.414193e-003, -4.541840e-002, -7.414193e-003, -1.539204e-003, 8.524803e-002, 1.025046e-001, -1.758494e-001, 2.217000e-002, 5.381327e-003, 1.447415e-002, 5.381327e-003, 1.463809e-001, -9.582561e-003, -7.188824e-002, 4.687137e-002, 1.656718e-004, -2.300772e-002, -5.800801e-002, -2.300772e-002, 1.097735e-002, -4.421473e-002, 6.677096e-003, -4.213045e-002, -5.444197e-002, 8.441140e-002, -1.190064e-001, 8.441140e-002, -3.941032e-002, -2.666046e-002, -3.737092e-002, -5.822858e-002, 3.852170e-002, -3.557889e-002, -6.312028e-002, -3.557889e-002, 4.364122e-002, -1.037892e-001, -3.241024e-002, -4.764430e-002, -1.866250e-002, -3.398791e-003, 1.053051e-003, -3.398791e-003, -3.481105e-002, 2.857291e-003, 1.030753e-001, 4.566626e-002, 2.967485e-002, 5.718195e-003, -3.251427e-002, 5.718195e-003, 7.788309e-002, 7.936199e-002, -1.465841e-001, 1.825497e-002, 2.780009e-002, -1.079805e-002, 6.907956e-003, -1.079805e-002, 1.313326e-001, -4.919082e-002, -3.978270e-002, -8.548193e-002, -1.616134e-002, -3.800352e-003, 9.166997e-002, -3.800352e-003, 8.847168e-002, -1.326917e-001, 4.725263e-003, 5.327149e-002, -5.567630e-003, 5.531816e-003, -2.017382e-002, 5.531816e-003, 1.420386e-002, 3.918617e-002, -4.560121e-002, -3.727581e-002, 4.753002e-003, 3.122036e-002, -8.111540e-002, 3.122036e-002, 8.218089e-002, -1.006975e-001, 7.859891e-002, 7.675149e-002, -


© ISO/IEC 2004 — All rights reserved

Copyright International Organization for Standardization
Provided by IHS under license with ISO
No reproduction or networking permitted without license from IHS
Not for Resale

1.788286e-002, 6.264344e-002, -4.120184e-002, 6.264344e-002, 1.118574e-001, -9.165759e-002, 2.024484e-001, 6.205621e-002, 3.545709e-003, 3.830318e-003, -4.744957e-002, 3.830318e-003, 1.845868e-001, -1.809644e-001, -1.040338e-002, 4.893709e-002}, {-2.697593e-004, -1.817030e-003, 3.452028e-005, -2.342051e-003, -9.863971e-003, 8.178348e-003, 7.698832e-003, 4.516303e-003, 7.305831e-004, 4.516303e-003, 7.698832e-003, 8.178348e-003, -9.863971e-003, -2.342051e-003, 3.452028e-005, -1.817030e-003, -5.197459e-003, 1.831192e-002, 1.293854e-003, 1.670555e-002, -1.527849e-002, -2.882469e-003, 1.266056e-002, 2.247227e-003, 2.840095e-003, 1.157187e-002, -6.403374e-003, 7.889853e-003, 8.089055e-003, -1.141019e-002, -4.156344e-003, -5.323306e-003, 1.324347e-002, -1.251048e-002, 2.576378e-003, -3.643536e-003, 4.903549e-003, -1.535564e-002, 3.075900e-003, 1.088868e-003, 3.193377e-003, 1.433120e-002, -4.898792e-004, -7.463061e-003, 2.616937e-002, -7.646888e-003, 1.107033e-002, -2.530692e-002, 9.128277e-003, 1.044511e-002, -1.610544e-003, -1.008829e-002, -4.090035e-002, 1.709952e-002, 2.270393e-002, 2.403065e-003, 1.213031e-002, -3.006963e-002, 7.489969e-003, 2.301605e-002, 8.902501e-003, 1.271554e-002, -2.824209e-004, -1.040808e-002, 5.414133e-004, 1.707746e-002, 9.049932e-003, -4.171360e-003, -1.074995e-002, 4.219876e-003, 2.229873e-002, 9.990210e-003, 3.641975e-004, 1.831067e-002, 1.066297e-002, 1.842803e-002, 1.173251e-002, 2.880253e-002, 2.074507e-002, 4.836060e-003, -1.822779e-003, -7.417414e-003, -3.767559e-002, -4.364159e-005, -1.035114e-002, 9.495531e-003, 1.642323e-002, -9.098316e-003, -3.285452e-003, 3.149826e-002, 1.266227e-002, -2.136522e-003, -1.399740e-002, 4.605613e-003, -2.345921e-002, -1.224260e-003, 1.013367e-002, 1.633399e-002, -2.256571e-002, -1.598474e-002, -2.498893e-002, -1.101877e-002, -1.117710e-002, -2.606319e-002, -2.074165e-002, 1.163640e-002, 1.868956e-002, 2.738988e-002, 2.026499e-002, -1.614374e-002, -8.370322e-003, 1.855183e-002, 1.917671e-003, -2.029108e-002, 6.982594e-003, 6.797070e-003, -4.025843e-002, -9.469075e-003, -5.067968e-002, -3.744492e-002, -9.047188e-003, -1.377928e-002, 5.070277e-004, 1.302495e-002, -1.869769e-002, 1.997989e-002, -4.016221e-002, -2.186755e-002, -8.116724e-004, 9.327733e-003, 1.559792e-002, -2.322805e-002, 2.894308e-002, -2.322805e-002, 1.559792e-002, 9.327733e-003, 1.057906e-002, -1.416271e-002, 1.992096e-002, -1.052018e-002, -5.695001e-002, -1.565154e-003, 2.069408e-002, 3.562085e-002, -8.841133e-003, 1.679319e-002, 3.564423e-002, -5.995890e-002, 3.631722e-002, 1.424892e-001, 4.471865e-002, -5.133157e-003, 5.020585e-002, -4.931149e-004, -4.536930e-002, 6.398540e-003, -2.723196e-002, 2.990733e-002, 5.689698e-002, 5.627412e-002, -1.918348e-003, 5.851033e-003, 3.560323e-002, -2.032048e-002, 8.467416e-003, -2.032048e-002, 3.560323e-002, 5.851033e-003, -1.329380e-002, 1.692749e-002, 1.274800e-002, -3.895330e-002, 3.000595e-002, -1.784513e-002, -2.287361e-002, 1.889393e-002, -6.874672e-003, -4.004466e-002, 3.519365e-002, 7.277435e-002, 1.387999e-002, -6.132224e-002, 1.933822e-002, 6.060786e-003, -7.677105e-004, -5.234897e-002, 5.572422e-002, 1.159166e-001, -2.707185e-002, -6.589245e-002, -1.732727e-002, 3.709340e-002, -4.038134e-003, 5.793511e-003, 2.336999e-002, -1.680869e-002, -2.871268e-002, -1.680869e-002, 2.336999e-002, 5.793511e-003, -6.598881e-002, 2.871657e-002, 8.194312e-003, 1.755927e-002, -1.223684e-002, -3.388540e-002, -3.811854e-002, 1.340450e-002, 2.973495e-002, -1.162860e-002, 2.021944e-002, -2.452894e-002, -1.655769e-002, -2.279952e-002, 4.822597e-002, -2.474621e-002, -7.474077e-003, 6.792370e-002, -1.236230e-002, 3.273081e-002, 1.030743e-001, 3.261730e-003, 3.685804e-002, -8.379093e-003, 6.498396e-003, -4.777019e-003, -2.389312e-004, -1.643183e-002, 1.005922e-002, -1.643183e-002, -2.389312e-004, -4.777019e-003, -5.109527e-002, -3.650305e-002, 8.764786e-003, -7.742580e-002, -3.055525e-002, -2.756369e-002, 1.865593e-003, 4.970398e-002, -1.007743e-002, -3.917930e-002, 3.657744e-002, -3.901574e-002, -1.723503e-002, -6.058438e-002, -3.576052e-002, 1.920548e-002, -4.229939e-002, 1.938061e-002, 4.082071e-002, 4.308697e-002, 1.377139e-003, -2.002721e-003, 4.023959e-004, 6.968879e-002, 1.016541e-003, 3.592118e-003, -6.025405e-002, 3.592118e-003, 3.432507e-002, 2.086318e-002, -5.974016e-002, -1.763234e-001, -6.627619e-004, 3.967569e-002, -2.837897e-001, 3.967569e-002, 1.467109e-001, -4.178543e-001, -6.383233e-002, 5.294367e-002, 1.539219e-002, 5.969439e-002, -4.309528e-002, 5.969439e-002, -7.470223e-002, -7.737967e-002, -3.666622e-002, -2.238627e-001, -4.502070e-002, -2.166041e-002, -3.572001e-002, -2.166041e-002, -5.168264e-002, 1.423549e-002, 6.098812e-003, -9.932720e-002, 4.124295e-002, -3.275751e-003, -2.816466e-002, -3.275751e-003, -2.936795e-002, -8.558037e-002, 5.287605e-002, -1.604547e-001, -4.240840e-002, 1.721220e-002, 1.114193e-001, 1.721220e-002, -5.773931e-002, 7.313491e-003, -3.591425e-002, 2.869322e-002, -2.164049e-002, -1.746467e-002, -3.771879e-002, -1.746467e-002, -1.403548e-003, 5.602141e-002, 7.934177e-002, 4.114131e-002, 4.935065e-002, -2.184132e-002, -1.122406e-002, -2.184132e-002, -5.420025e-002, -7.395910e-002, -7.585462e-002, -8.234022e-002, 3.761627e-003, -1.171247e-002, 3.800270e-002, -1.171247e-002, 5.619404e-003, -6.215111e-002, -2.338696e-002, 5.334682e-002, 3.549005e-002, 2.776294e-003, -2.655053e-003, 2.776294e-003, -5.615469e-002, 2.122450e-002, 1.215155e-001, 1.646194e-001, 1.061340e-002, -9.389060e-003, 5.374190e-002, -9.389060e-003, -1.669849e-004, -6.835124e-002, -8.772609e-003, 1.301638e-001, 3.332062e-002, 3.803865e-002, 2.863180e-003, 3.803865e-002, 2.050071e-002, -6.691906e-002, 4.536192e-002, 7.918952e-002, -1.442277e-002, -1.956684e-002, -3.163065e-003, -1.956684e-002, -5.977722e-002, 1.253109e-001, 6.494114e-002, -1.364229e-003, -2.886704e-002, 1.569057e-003, -1.340926e-001, 1.569057e-003, -7.122563e-003, 7.550609e-002, -1.230709e-001, -1.577573e-001, -

© ISO/IEC 2004 — All rights reserved


Copyright International Organization for Standardization
Provided by IHS under license with ISO
No reproduction or networking permitted without license from IHS
Not for Resale

1.118901e-002, 2.816044e-003, -3.732361e-002, 2.816044e-003, -2.047355e-002, 1.052651e-001, -1.466875e-001, 4.012092e-002, -2.624661e-002, 6.950012e-003, 5.138266e-002, 6.950012e-003, -1.488770e-004, 1.683980e-002, 1.675711e-001, -1.833073e-001},
{-7.079848e-005, 4.811098e-003, -1.939840e-003, 5.367435e-004, 3.768935e-003, -2.462310e-003, -2.700074e-003, 8.218410e-004, 5.378148e-003, 8.218410e-004, -2.700074e-003, -2.462310e-003, 3.768935e-003, 5.367435e-004, -1.939840e-003, 4.811098e-003, 2.585036e-003, 1.544291e-002, -2.423420e-002, -6.006777e-003, 1.847441e-002, 2.138854e-002, 9.113019e-003, -1.189535e-002, -9.613352e-004, -5.948791e-004, 1.423930e-003, -1.377880e-003, 2.209404e-002, -2.851091e-003, 5.844944e-004, 8.354771e-003, -1.503625e-002, 3.698003e-003, -5.579288e-003, -1.547219e-002, 8.426496e-003, -4.656434e-004, 2.210621e-002, -2.487401e-002, 1.598769e-002, -1.407422e-002, 1.541843e-003, 1.217335e-002, -2.608920e-003, -2.136583e-002, -6.099740e-003, -1.291356e-002, -4.459179e-003, 2.002299e-002, 8.006801e-003, -6.422978e-003, 8.683914e-003, 8.736183e-003, 2.327556e-002, -2.781927e-003, 1.974111e-002, 3.037086e-005, 1.991442e-002, 4.676646e-002, 1.478045e-002, -4.132999e-003, -1.207803e-002, -1.909369e-003, 6.661597e-003, 7.913126e-003, 2.988129e-002, -6.569478e-003, -2.968031e-002, 2.441015e-002, -1.773347e-002, 3.104686e-003, 5.256232e-002, 1.171911e-002, -2.050293e-002, 1.713989e-002, -2.030983e-002, -1.783558e-002, 1.769846e-002, 1.023993e-002, 5.003333e-004, 2.330275e-002, 2.368511e-002, -6.362285e-003, -1.025052e-002, -1.945079e-002, -1.903748e-002, 1.698013e-002, 2.629147e-002, 3.469410e-002, -1.537360e-002, 5.190265e-003, 2.359400e-002, 1.937468e-003, 3.804798e-002, 1.633158e-002, 4.373963e-003, -3.868701e-003, -1.427299e-002, -1.235341e-002, 1.574409e-002, -1.076788e-002, -1.748565e-002, -1.330940e-002, 2.115771e-003, 2.131118e-002, 1.458504e-002, -5.074732e-003, 9.874727e-003, -5.724414e-003, -1.128800e-002, 7.511776e-005, -2.860937e-002, -1.247804e-002, -3.796122e-002, -3.895638e-002, -5.385480e-003, -2.622538e-002, 1.784801e-002, 3.331890e-003, 2.803565e-004, 4.496616e-003, -2.517590e-002, -3.268368e-003, 3.832654e-003, -1.568526e-002, -2.039385e-002, 8.245453e-003, -7.312507e-004, -9.803665e-005, -3.294556e-002, -1.049850e-003, 4.817664e-002, -1.049850e-003, -3.294556e-002, -9.803665e-005, 1.570545e-002, -1.016650e-002, -8.186702e-003, -1.069766e-002, -3.185328e-002, -4.754536e-003, -2.828496e-003, 2.606767e-002, -1.027907e-002, -2.532098e-002, -2.985983e-003, 2.129024e-002, -3.465128e-002, -3.574901e-002, 3.629941e-002, -6.562681e-002, -1.210042e-002, 7.606680e-002, 5.165255e-002, -6.841071e-002, -5.619436e-002, -1.072858e-001, -6.515621e-002, -1.295230e-002, -5.466503e-003, -3.995141e-004, -1.787419e-002, -3.447649e-003, 2.228779e-002, -3.447649e-003, -1.787419e-002, -3.995141e-004, 1.906114e-002, 8.936538e-003, 2.442405e-003, -1.334143e-002, 6.424034e-002, -3.723914e-002, 1.134701e-002, -2.692844e-003, -1.406102e-002, 7.983195e-004, 1.743806e-002, -7.861615e-003, -1.276484e-001, 6.995595e-002, -1.012614e-001, -1.082921e-002, -5.970689e-002, 1.675822e-002, 7.745035e-003, -1.150330e-001, 5.207922e-002, -8.759424e-002, -2.571152e-002, 1.153994e-002, 2.536640e-003, 3.728938e-004, -1.633954e-003, 1.214832e-002, -2.929818e-002, 1.214832e-002, -1.633954e-003, 3.728938e-004, -1.252469e-002, 2.201566e-002, 2.116102e-002, -1.332951e-004, -2.596407e-003, 1.494699e-002, -5.919764e-003, -3.634868e-002, 4.655662e-002, -4.297461e-002, -1.823023e-002, -1.696262e-002, 5.368691e-002, -1.825337e-002, -7.891891e-004, 2.779431e-002, -1.603237e-002, 1.100970e-002, -9.306050e-002, 1.016178e-001, -2.987839e-002, 1.186857e-004, -7.421531e-002, -3.167951e-003, 3.590315e-003, 2.764278e-003, 2.755256e-003, 9.097022e-004, 2.090379e-002, 9.097022e-004, 2.755256e-003, 2.764278e-003, -5.673079e-002, -3.576364e-002, 2.750594e-003, 6.119122e-003, 7.978709e-002, 4.066783e-003, -5.880204e-002, -1.680096e-002, -6.668358e-003, 2.009767e-002, 8.180687e-002, -2.830183e-003, -1.636542e-001, -4.233124e-002, 2.938884e-002, -6.542405e-002, 2.832921e-003, -1.184441e-001, 1.140779e-002, -1.924793e-002, -9.839031e-002, 3.336003e-002, -6.063091e-002, -1.441791e-002, 3.454448e-003, 1.753109e-002, -1.243911e-002, 1.753109e-002, -4.415597e-003, -3.256364e-002, -1.503826e-001, 3.737131e-002, 1.762130e-002, -2.876167e-002, -1.261395e-001, -2.876167e-002, 9.723020e-002, 1.805968e-002, 7.724809e-003, 2.786090e-002, 5.019861e-004, -3.945722e-002, -2.235419e-001, -3.945722e-002, -4.732649e-002, -8.772230e-002, 5.920401e-002, 2.461470e-001, -9.373001e-003, 7.735474e-003, -6.960205e-002, 7.735474e-003, 1.141188e-002, 8.329629e-002, -3.911908e-002, -2.050974e-002, -1.345130e-002, 2.621410e-002, 1.331206e-002, 2.621410e-002, -1.980467e-001, 1.325729e-001, -6.985985e-002, 9.317668e-002, -8.355697e-003, 8.823974e-003, 4.872433e-002, 8.823974e-003, 4.147019e-002, 1.088581e-002, 1.477897e-001, 6.471741e-002, -1.889521e-002, -7.216780e-003, -1.858488e-003, -7.216780e-003, 8.671847e-002, 7.576951e-003, 1.137898e-001, -1.244861e-001, 2.229972e-002, 1.305418e-002, -4.347213e-002, 1.305418e-002, -4.897901e-002, -4.374540e-003, 4.165547e-002, 9.859736e-002, 3.270180e-002, 8.013891e-004, 9.998553e-003, 8.013891e-004, 1.122545e-002, 2.216624e-001, 2.944708e-002, -2.179390e-001, 1.217034e-002, -3.900969e-002, 3.578033e-002, -3.900969e-002, -8.625214e-002, 2.238712e-002, -1.240675e-001, -5.390363e-002, 5.062574e-002, 5.759361e-003, 3.536756e-002, 5.759361e-003, 9.652055e-002, -1.781212e-001, 1.236274e-002, 9.004070e-002, 4.175080e-002, 1.076825e-002, 4.126572e-002, 1.076825e-002, 7.302275e-003, -1.681124e-001, 2.055060e-002, 1.252181e-001, -1.967715e-002, -6.333981e-003, 2.659818e-002, -6.333981e-003, 5.635448e-002, -1.178706e-001, 6.576577e-002, -5.056992e-002, -2.265834e-002, -6.936445e-002, -5.635453e-002, -6.936445e-002, 4.458659e-002, 1.126495e-001, 3.065957e-002, 1.661682e-001, -


© ISO/IEC 2004 — All rights reserved

Copyright International Organization for Standardization
Provided by IHS under license with ISO
No reproduction or networking permitted without license from IHS
Not for Resale

4.505711e-002, -7.328696e-002, -3.786664e-002, -7.328696e-002, 1.014122e-001, -1.090061e-002, 6.552016e-002, 1.467583e-001, -4.372912e-002, -1.270846e-002, 1.231097e-002, -1.270846e-002, 3.258607e-002, 4.917796e-002, 7.807919e-002, -3.305365e-002},
{-1.955081e-004, 3.040503e-003, -3.591107e-004, -5.659351e-003, 5.130886e-003, 4.024393e-003, -1.395335e-003, -4.264255e-003, -1.779563e-002, -4.264255e-003, -1.395335e-003, 4.024393e-003, 5.130886e-003, -5.659351e-003, -3.591107e-004, 3.040503e-003, -4.480456e-004, 7.201756e-003, -1.456523e-002, 5.971746e-004, -8.638155e-003, -3.522048e-003, 2.862518e-002, -6.769396e-003, -9.828827e-003, 1.709031e-002, -1.101556e-002, -1.723901e-002, -1.289779e-002, 1.507308e-003, -9.579280e-003, -1.080517e-002, 1.792023e-003, -1.448969e-002, -9.597150e-004, -2.110672e-002, -2.889529e-002, -2.060550e-002, -8.937913e-003, -2.970676e-002, 9.992042e-003, 3.835598e-003, 1.017863e-002, -2.708300e-002, 2.243223e-003, 4.583137e-003, 1.387581e-002, -1.457329e-002, -3.735042e-003, 6.539849e-003, 2.580898e-002, 1.958762e-002, -3.552062e-003, -3.654206e-002, -7.179809e-003, -4.170290e-003, -1.284394e-002, -1.470480e-003, -4.591018e-002, -2.887098e-002, 9.949904e-003, 7.493375e-003, -1.374784e-002, -1.963707e-003, -5.504627e-003, 4.548342e-002, -1.633651e-002, -2.799713e-002, -1.026524e-002, 1.077208e-002, 8.638428e-003, -1.028549e-002, -1.960988e-002, 1.480406e-002, 1.885487e-002, 1.557490e-003, -2.376403e-002, 5.912096e-003, -1.448518e-003, 3.519594e-002, 8.033354e-003, 4.155045e-002, 1.139851e-002, -6.553279e-003, 2.836598e-002, 2.249962e-002, 8.640415e-003, -1.594005e-002, 2.949347e-003, 2.125557e-002, 7.673870e-004, -2.224798e-002, 6.586751e-004, -2.087207e-002, -2.057178e-004, 1.119876e-002, 1.130112e-002, 1.454716e-002, 8.140636e-004, -1.503338e-003, 4.370737e-002, -1.474487e-002, -5.834802e-003, -3.141702e-002, -1.113770e-003, 1.037349e-002, -4.203962e-002, 3.363543e-002, -2.691815e-002, -4.983042e-003, -7.056678e-003, -1.046298e-002, -7.868174e-003, 1.928291e-002, -3.769643e-003, -1.125996e-002, -1.788366e-002, -1.446868e-002, 1.896721e-002, 5.378412e-003, 1.135511e-003, -4.265629e-002, 3.236747e-002, 2.615709e-002, 1.196194e-002, -1.543959e-002, -5.175324e-003, 2.875862e-002, 2.697163e-002, 8.619826e-003, -1.830414e-002, 2.352118e-002, 9.545177e-003, 2.352118e-002, -1.830414e-002, 8.619826e-003, 2.201917e-002, 2.581795e-002, 1.160360e-001, 1.691112e-002, 3.428611e-002, 1.309212e-002, -4.468006e-002, 1.625826e-002, 2.567654e-002, 1.781776e-002, 9.647150e-002, -1.538608e-002, -5.689173e-002, 2.669695e-002, -4.770464e-003, -2.030790e-002, 1.300547e-002, 2.623644e-002, -3.668893e-002, -6.402004e-002, 1.971412e-001, 9.912821e-002, 2.602893e-002, 1.497186e-002, -2.059413e-002, -1.694636e-003, -1.215760e-002, 1.128100e-002, -4.242406e-002, 1.128100e-002, -1.215760e-002, -1.694636e-003, -8.173641e-004, -3.197537e-003, 4.466916e-002, 4.083583e-003, -5.676974e-002, -2.039250e-003, 1.916810e-002, -1.994574e-004, 4.932279e-003, 3.361584e-003, -3.671657e-002, 6.162606e-002, 2.502056e-002, 9.869218e-002, -1.001114e-002, 2.961852e-002, 9.230995e-003, 1.469517e-002, 1.530605e-002, 5.965256e-002, 1.010180e-001, -1.948641e-002, 1.047690e-001, 2.220892e-003, -1.439378e-002, 2.758265e-003, -6.841392e-003, -9.328385e-004, 4.522373e-002, -9.328385e-004, -6.841392e-003, 2.758265e-003, 4.223275e-002, -6.388395e-003, -6.727297e-002, -5.695565e-002, -4.792341e-002, 3.566381e-002, 1.375074e-002, -1.772022e-002, -6.032262e-002, 3.864376e-003, -2.627080e-002, -7.523139e-002, 1.099635e-002, -9.998188e-003, 7.281578e-003, -1.889488e-002, 1.805730e-002, -8.203807e-002, -6.767787e-002, -8.882940e-002, -3.211345e-002, 6.793847e-002, -3.659102e-002, -5.906143e-002, 7.820770e-003, 8.312409e-004, -6.284349e-004, 8.373138e-003, 2.453703e-002, 8.373138e-003, -6.284349e-004, 8.312409e-004, 2.197418e-002, 2.344492e-002, 2.835179e-003, 2.738785e-002, 2.770555e-002, -2.168703e-002, -3.124981e-002, 2.822041e-002, 2.400199e-002, -4.513887e-002, -4.273935e-002, -8.424488e-002, -7.157447e-003, 4.346524e-002, 6.516720e-003, -1.242570e-002, -6.795592e-002, 2.052777e-002, -2.407744e-002, -2.126668e-002, -6.465973e-002, -3.457760e-003, -2.119658e-002, 6.846904e-003, -3.720907e-002, -3.907551e-002, -2.974501e-002, -3.907551e-002, 1.759178e-002, 3.574494e-002, -1.796395e-001, -7.642221e-002, 4.237177e-002, -4.276702e-002, 5.484566e-002, -4.276702e-002, 9.796036e-002, -4.525451e-002, -2.618799e-002, -1.760388e-001, -3.349223e-002, 2.900883e-002, 1.920838e-001, 2.900883e-002, -8.734230e-002, 2.604557e-001, 5.371626e-002, 1.108598e-002, 3.243332e-002, -2.607789e-003, 1.277701e-001, -2.607789e-003, -6.556971e-002, 5.643938e-002, -6.281536e-002, -1.251101e-001, 2.431907e-002, -7.807408e-003, 2.570172e-002, -7.807408e-003, 3.052991e-002, -8.253592e-002, -5.242857e-002, -6.804472e-003, -2.510137e-003, -1.754418e-002, -1.676203e-001, -1.754418e-002, -1.023630e-001, -8.857775e-002, 5.145886e-002, -5.725694e-002, -3.735826e-002, 3.752950e-002, 3.268070e-003, 3.752950e-002, -1.983013e-003, -3.371226e-003, -3.769952e-003, -1.458379e-002, 1.782303e-002, -1.800193e-002, -6.233497e-003, -1.800193e-002, 1.096937e-001, 3.270844e-002, 9.244881e-002, 2.650109e-002, -5.058257e-002, 2.599707e-003, -4.566513e-002, 2.599707e-003, -1.048285e-001, 3.555628e-001, -9.451083e-002, -1.788912e-001, 3.349294e-003, 2.344482e-002, -6.380455e-002, 2.344482e-002, 6.491531e-002, -5.377371e-002, -1.371470e-002, 2.349387e-003, 1.661419e-002, -2.795388e-003, 7.520461e-002, -2.795388e-003, 4.122997e-003, 1.175357e-001, -6.651292e-003, -2.146042e-002, -5.840653e-003, 1.014265e-002, 8.878400e-003, 1.014265e-002, -5.599947e-002, 1.895723e-002, -4.570040e-002, -5.074330e-002, 3.451675e-002, 5.450087e-003, -2.725534e-003, 5.450087e-003, 1.087803e-001, 4.009847e-002, -9.376747e-002, 1.226960e-001, -1.677265e-003, -1.589675e-002, 4.112844e-002, -1.589675e-002, -7.178447e-002, 3.580643e-002, 1.167656e-001, -7.320921e-002,

© ISO/IEC 2004 — All rights reserved


--`,,```,,,,````-`-`,,`,,`,`,,`---

Copyright International Organization for Standardization
Provided by IHS under license with ISO
No reproduction or networking permitted without license from IHS
Not for Resale

1.326652e-002, 1.161996e-002, -1.238552e-001, 1.161996e-002, -3.659347e-002, 8.964716e-002, 9.045971e-002, -8.810238e-002, -1.621928e-002, -2.404415e-002, -4.847272e-002, -2.404415e-002, 7.745530e-002, 3.602769e-002, -1.588199e-001, 1.111384e-001},
{5.371094e-004, 9.633910e-004, -6.181563e-003, 3.284829e-003, -2.017850e-003, -1.794396e-003, 5.406075e-003, 3.733590e-003, -2.988817e-003, 3.733590e-003, 5.406075e-003, -1.794396e-003, -2.017850e-003, 3.284829e-003, -6.181563e-003, 9.633910e-004, -5.464900e-003, -1.083190e-002, -5.496366e-003, 1.075331e-002, 5.521472e-003, -1.513088e-002, 7.397709e-004, 2.936151e-003, -3.176554e-003, 8.848022e-003, 4.974282e-004, -1.050378e-002, -8.861169e-003, 9.560074e-003, -6.450966e-003, 2.479876e-003, -2.517351e-002, 1.303643e-002, -2.326471e-002, 1.719613e-002, 1.824975e-002, 1.769384e-002, 5.032248e-003, 2.768321e-002, 7.578732e-003, 1.099936e-002, 3.197255e-002, -3.814313e-003, -1.247193e-002, 1.043436e-002, 1.346223e-002, 1.499701e-002, -1.074676e-003, -8.573221e-003, 2.946232e-003, 1.712413e-002, 2.678432e-002, 3.408648e-003, -1.307404e-002, 9.364335e-003, 1.369335e-002, 1.385263e-002, -3.147788e-002, -3.385346e-002, -8.179827e-003, -9.694275e-003, 7.028626e-003, -3.485307e-002, -2.042086e-002, 1.950513e-002, -7.981780e-003, 2.555002e-002, 8.202015e-003, -3.100839e-002, 4.939230e-004, -1.654632e-002, -1.680434e-002, 4.002307e-002, -3.959671e-002, -3.564591e-002, 5.542114e-003, 8.247923e-003, 1.530929e-002, -3.239437e-002, -1.408769e-002, 1.218883e-002, -2.184993e-002, 1.948746e-002, -1.034875e-002, -5.658812e-004, 1.183777e-003, -4.655374e-003, -2.208879e-002, -1.907971e-002, -3.100273e-002, -3.521926e-002, -2.171403e-002, -4.443132e-003, -7.466454e-003, 5.554367e-003, 8.754614e-003, 9.642894e-003, 2.706029e-002, 1.825218e-002, 8.980561e-005, 1.021650e-002, 1.805277e-002, -3.597451e-003, 1.752386e-002, -7.709559e-003, 1.315807e-002, 1.327355e-002, 3.355205e-002, 2.756100e-003, 1.590018e-003, -4.981130e-004, -4.349806e-003, -1.587229e-002, -1.082234e-003, -6.156984e-003, -6.532400e-003, -2.007149e-002, -7.605043e-003, -4.454384e-002, -3.164274e-003, -1.327896e-002, -2.153286e-002, -2.631011e-004, 3.651756e-002, -2.167892e-002, 1.591048e-002, -8.135442e-003, -7.875771e-003, 1.222008e-002, 1.629248e-002, -1.524966e-002, 5.986940e-003, -1.524966e-002, 1.629248e-002, 1.222008e-002, -9.968842e-003, 6.504997e-002, -3.302748e-002, 3.746633e-002, -1.485267e-002, -4.239513e-002, 1.568365e-002, 1.125811e-002, -4.257174e-002, 6.525630e-003, -5.215664e-002, 3.919046e-004, 4.181506e-002, 7.779075e-002, -1.681053e-002, -6.706330e-002, 2.582475e-002, -4.718295e-002, -3.211782e-002, -3.647568e-002, -9.341043e-002, -1.221315e-002, 5.866581e-002, -4.130157e-002, -4.065905e-004, 1.172370e-002, -8.782639e-003, 9.579953e-003, -1.467128e-002, 9.579953e-003, -8.782639e-003, 1.172370e-002, 4.393585e-002, 9.041512e-003, -4.392098e-002, -2.131743e-002, -1.149498e-002, 4.209499e-002, -4.385022e-002, 9.545910e-003, 2.535821e-002, 2.012239e-002, 7.222933e-004, -6.466328e-002, 6.544671e-002, 4.249993e-002, 5.128193e-002, 7.705180e-002, -4.540129e-002, -5.709572e-002, 1.135199e-001, 9.295649e-003, 4.515817e-002, -6.230737e-002, 7.003029e-002, 4.566767e-002, 6.563306e-003, -5.616630e-003, -5.370419e-003, -1.826095e-004, -6.302474e-002, -1.826095e-004, -5.370419e-003, -5.616630e-003, 3.028742e-002, 1.654296e-002, -9.266873e-003, -5.270534e-002, 4.930926e-002, -6.321626e-002, 2.314616e-002, -4.629084e-002, 2.249592e-002, -1.631720e-002, -1.978073e-002, 2.076527e-002, -1.298164e-002, -3.358722e-002, 1.038753e-001, 2.391137e-003, -9.205567e-003, 4.645222e-004, -4.986614e-002, -2.390548e-002, -9.272908e-003, 1.504021e-002, -4.519709e-003, -4.342292e-002, 2.256164e-003, -5.639516e-003, 1.458287e-002, 1.527827e-003, -4.067659e-002, 1.527827e-003, 1.458287e-002, -5.639516e-003, -2.157431e-002, 8.679723e-004, 1.751128e-002, -5.307222e-002, -6.249162e-002, -7.260275e-003, -2.302032e-002, -2.452165e-002, -3.156296e-002, 7.442570e-002, -4.901348e-004, 4.269542e-002, 1.613776e-002, -3.800138e-002, -6.229512e-002, 3.909187e-003, -9.264588e-002, 3.790406e-002, 7.692544e-003, 9.266196e-002, 3.679661e-004, -2.754903e-002, -4.740796e-002, -5.439688e-002, 3.761540e-002, -1.376467e-002, -7.908977e-003, -1.376467e-002, 6.448468e-002, 4.860879e-003, -1.542022e-001, -2.860861e-002, -9.919896e-003, -7.572759e-002, 1.060610e-001, -7.572759e-002, 5.032148e-002, -2.469771e-001, 1.992547e-002, 4.184645e-002, 7.824084e-003, 1.897927e-002, -3.086966e-001, 1.897927e-002, 3.210441e-002, -2.319353e-002, -1.522622e-002, 1.518389e-001, -6.589124e-003, -1.009363e-002, 5.604416e-003, -1.009363e-002, 2.077793e-002, -7.720975e-002, 5.980031e-002, -6.595743e-002, -4.974364e-002, -2.294101e-002, -1.228771e-002, -2.294101e-002, 7.665836e-002, 9.153129e-002, -7.933507e-003, 3.487749e-002, 1.417237e-002, -2.573353e-002, -1.780256e-001, -2.573353e-002, -2.177001e-002, 1.622257e-001, -2.324468e-001, -1.934973e-002, -3.316387e-003, -3.916038e-003, 1.611490e-001, -3.916038e-003, -1.297353e-001, -8.891194e-003, -2.175096e-002, 1.684733e-001, 1.674836e-003, -5.053844e-003, 1.038637e-002, -5.053844e-003, 1.014216e-002, -1.580076e-002, -4.166831e-002, 3.982469e-002, 2.351622e-002, 8.185555e-003, 1.726200e-002, 8.185555e-003, -9.014727e-003, 6.254252e-002, 1.173837e-002, -2.755016e-003, 2.091178e-002, -1.398737e-002, 1.389072e-002, -1.398737e-002, 5.058876e-002, 1.448184e-001, 1.203065e-001, 1.194727e-001, 4.709209e-002, 4.362639e-002, 2.308680e-002, 4.362639e-002, -2.514298e-002, 2.714995e-002, 1.177592e-001, 9.910134e-002, 1.824608e-003, -1.730961e-002, -4.835697e-003, -1.730961e-002, -7.802330e-002, 3.219863e-002, 4.744721e-002, 1.948357e-001, -1.275123e-002, 1.418101e-002, 4.624302e-002, 1.418101e-002, -1.712604e-002, 7.187541e-002, 1.471944e-001, -5.698310e-002, -2.511346e-002, 4.040012e-003, -1.505200e-002, 4.040012e-003, -9.040128e-003, 4.057319e-002, -1.445187e-001, -2.407597e-001, -


© ISO/IEC 2004 — All rights reserved

Copyright International Organization for Standardization
Provided by IHS under license with ISO
No reproduction or networking permitted without license from IHS
Not for Resale

3.237594e-002, -7.398803e-002, 3.369056e-002, -7.398803e-002, 5.104495e-002, 8.470118e-002, 5.178551e-002, -3.859165e-002, -1.428459e-002, -8.035158e-003, 1.409572e-002, -8.035158e-003, 9.941832e-002, -3.190518e-002, 1.317650e-001, -1.366894e-002},
{-6.382881e-004, 1.396142e-003, -3.667492e-003, -1.580172e-003, -2.972553e-003, -1.413884e-003, -4.435871e-003, 1.077129e-004, -8.965223e-003, 1.077129e-004, -4.435871e-003, -1.413884e-003, -2.972553e-003, -1.580172e-003, -3.667492e-003, 1.396142e-003, -1.349645e-002, 1.591577e-003, 7.041968e-003, 3.490505e-003, 4.346962e-003, -4.071742e-003, -1.217160e-002, -1.060191e-002, -1.790128e-002, 3.815930e-003, 1.508058e-003, 2.724796e-003, 1.650575e-003, -6.633773e-003, -2.236992e-003, 1.689974e-003, -1.552137e-002, 2.326087e-002, 6.711371e-004, -1.835041e-003, 2.764177e-002, 1.081480e-002, -6.648093e-003, -1.242803e-003, 3.032337e-002, 4.555112e-003, -2.393199e-002, -1.419658e-002, 1.305790e-002, 1.099803e-002, -5.075750e-003, 6.839743e-003, 1.284923e-003, -5.407276e-003, -4.426568e-003, 2.249329e-002, 3.318125e-002, 4.027364e-003, -1.353401e-002, 7.435111e-003, -2.336713e-002, -1.028998e-002, 2.944125e-002, -1.518001e-002, 7.825542e-003, 1.492947e-002, -1.020374e-002, 2.044584e-002, -7.392868e-003, -1.851829e-002, -3.682010e-002, -2.392070e-002, 1.805096e-002, -1.763867e-002, -2.206682e-002, 1.314011e-002, 2.253306e-004, 1.624350e-002, 3.106955e-002, 8.721229e-003, 1.795196e-002, -1.946009e-003, -7.273431e-003, -5.252721e-003, 3.752304e-002, -7.046041e-003, -1.108305e-002, -1.819450e-002, -4.139804e-004, 5.821443e-003, 1.196337e-002, 3.431326e-002, 3.000214e-003, 2.590866e-002, -3.626958e-002, -3.188568e-002, -1.378592e-002, -1.918897e-002, -2.128752e-002, 7.900643e-003, 3.856768e-002, 3.809006e-003, 1.649052e-002, -2.481823e-002, -5.016070e-003, -3.731850e-002, -4.368067e-003, 2.773766e-002, -1.181599e-002, -2.747194e-002, 2.495019e-002, -3.301595e-002, -2.891074e-002, -2.332391e-003, 4.904877e-003, -6.991337e-003, -2.543725e-002, -3.929584e-003, 1.734007e-002, -7.208726e-003, -2.330271e-002, -7.317912e-003, 1.606934e-002, -1.111499e-002, -5.126457e-002, -3.526949e-002, 1.661206e-002, -3.961784e-002, -3.167129e-002, -1.425873e-002, -9.274784e-003, 2.533089e-003, -3.295940e-003, 1.120181e-002, -7.113844e-003, 1.856174e-002, -2.764618e-002, 1.856174e-002, -7.113844e-003, 1.120181e-002, -1.322994e-002, -4.730169e-002, 3.691918e-002, 3.991290e-002, -1.538426e-003, -6.222838e-003, -6.152936e-002, 3.314490e-002, 1.842889e-002, 4.511290e-002, 4.539065e-002, 3.613890e-002, 4.088069e-003, -8.876103e-002, -1.148698e-002, 2.852833e-003, 6.101036e-002, -4.178906e-002, -1.421493e-002, 1.167641e-001, -8.917585e-002, 3.159422e-004, 1.082716e-002, 6.717390e-002, 4.441031e-003, 8.936907e-003, -2.421637e-002, 2.387615e-003, 2.104010e-002, 2.387615e-003, -2.421637e-002, 8.936907e-003, 4.299981e-002, -1.600007e-003, -4.589521e-002, 7.473179e-002, 2.080646e-002, 1.229388e-002, -2.232340e-002, -2.384931e-002, -2.877316e-002, 6.285821e-002, 5.716246e-002, 3.163159e-002, 1.523225e-002, -4.017287e-002, 1.017044e-001, 3.854895e-002, -9.675016e-002, -3.416442e-002, 6.021255e-002, 1.806312e-002, -9.223643e-003, 1.410584e-002, 6.438544e-003, -6.233518e-002, -7.045925e-004, 4.772858e-004, 4.484439e-003, 2.339236e-002, -2.358109e-002, 2.339236e-002, 4.484439e-003, 4.772858e-004, 1.012639e-002, -6.257553e-002, 3.035824e-003, 4.285711e-002, -2.456831e-003, 2.300175e-002, -5.365455e-002, 1.490399e-002, 1.638555e-002, 1.411874e-002, 2.672552e-002, 1.047709e-001, -7.852189e-002, -8.572405e-002, 3.008843e-002, -2.138605e-002, 4.179029e-002, -1.698363e-003, -7.924181e-004, -3.163092e-002, 1.064964e-001, 3.621517e-002, 7.259277e-002, -9.815153e-003, -1.078787e-003, 5.654784e-003, -1.142621e-002, 4.725850e-003, 4.262922e-003, 4.725850e-003, -1.142621e-002, 5.654784e-003, 1.163526e-003, -3.109503e-002, -4.041331e-002, 4.314142e-002, 8.210338e-002, 2.534613e-002, -6.697751e-003, -2.967304e-002, -2.504983e-002, -3.316356e-002, 5.963359e-003, 1.800493e-002, 2.787452e-002, 3.983081e-002, -4.742509e-003, -2.648503e-002, -8.546221e-003, -5.881932e-003, -1.113348e-002, 1.630160e-002, 8.590326e-002, 5.583532e-002, -1.075263e-003, -1.821216e-002, 3.318779e-002, -5.758680e-003, 2.889255e-002, -5.758680e-003, -7.196109e-002, -1.300772e-001, 7.851284e-002, 4.636338e-002, 6.606354e-003, -5.867746e-002, -1.053123e-002, -5.867746e-002, 3.580255e-002, 2.183833e-001, -3.004258e-002, -2.641836e-001, -2.828830e-002, 4.669634e-002, -3.224455e-001, 4.669634e-002, -1.510503e-001, 1.552354e-001, -1.286404e-002, 1.704090e-001, -5.366168e-003, -2.660306e-002, -6.771279e-002, -2.660306e-002, 5.889758e-002, -4.290371e-002, 1.181017e-001, 1.101198e-002, -6.048806e-002, 1.512617e-002, 1.975936e-002, 1.512617e-002, 7.772404e-002, -1.353502e-001, -1.100624e-002, 6.935994e-002, 1.739797e-002, -1.984151e-002, 1.342045e-001, -1.984151e-002, -4.966191e-002, 3.636627e-002, -1.255352e-001, 1.227621e-001, 6.821762e-002, 6.602467e-003, -6.087577e-002, 6.602467e-003, -8.023406e-002, -5.030282e-002, -7.207412e-002, 1.514539e-002, -3.012212e-002, 7.361192e-002, 3.622430e-003, 7.361192e-002, 1.112120e-001, 6.454306e-002, -2.179249e-003, -1.268792e-001, 4.252565e-002, -6.337029e-003, -4.906746e-002, -6.337029e-003, 4.626432e-003, -1.637184e-001, -9.678612e-003, 9.736643e-002, -3.128035e-002, 8.442172e-003, -3.958424e-002, 8.442172e-003, 2.932221e-002, -6.170190e-002, -2.802452e-002, 1.671464e-002, -4.047931e-002, -3.802577e-002, 9.461560e-002, -3.802577e-002, 7.702282e-003, 3.600484e-002, -7.094585e-002, -1.553640e-002, 4.300414e-002, -3.234752e-002, 3.781772e-002, -3.234752e-002, 6.925043e-002, 4.654965e-002, -8.245420e-005, -9.107452e-002, -9.565384e-003, 2.132005e-003, 1.888902e-002, 2.132005e-003, -2.595849e-003, -4.700196e-002, -2.126263e-002, 2.035567e-002, -2.384514e-003, 1.773413e-002, -1.478002e-002, 1.773413e-002, 2.961665e-002, 1.363726e-001, 1.508151e-001, 2.160844e-002,

© ISO/IEC 2004 — All rights reserved


Copyright International Organization for Standardization
Provided by IHS under license with ISO
No reproduction or networking permitted without license from IHS
Not for Resale

3.286071e-002, 5.844494e-002, -8.175671e-002, 5.844494e-002, 9.443236e-003, 1.449990e-002, 9.678477e-002, 1.921021e-001, -3.646433e-002, 4.363801e-002, -2.854127e-002, 4.363801e-002, 4.693499e-002, -1.018274e-001, -1.307263e-001, -4.134428e-002},
{-7.847062e-005, -1.325867e-003, -2.879404e-003, 7.720664e-004, -7.918763e-004, 4.176075e-003, -5.632183e-003, 6.315109e-003, 6.755443e-003, 6.315109e-003, -5.632183e-003, 4.176075e-003, -7.918763e-004, 7.720664e-004, -2.879404e-003, -1.325867e-003, -1.642978e-003, -3.743238e-003, -1.415560e-003, -4.474401e-004, -8.471729e-003, -1.118940e-002, 5.716506e-003, 1.465963e-002, 2.042709e-002, 4.065111e-003, 2.988836e-003, -1.054757e-002, 8.892215e-003, 2.383702e-003, 4.363466e-003, -2.209671e-003, 5.391061e-003, -7.287256e-003, -1.186734e-002, 1.732995e-003, -4.699643e-003, -1.065236e-002, 4.139035e-003, 3.394969e-002, 1.346022e-002, 3.980879e-003, 4.134096e-004, -1.961930e-002, 4.688660e-003, -2.519326e-003, -3.396751e-003, -1.590365e-002, -2.160306e-003, 2.172899e-002, 1.128410e-002, 1.504885e-002, 1.517488e-002, -1.603134e-002, 6.221655e-003, 1.776865e-002, 1.826378e-002, 1.501185e-004, -1.693650e-002, -1.234316e-002, 1.397621e-002, 1.571994e-002, -4.579748e-002, -5.287785e-003, 3.768947e-003, -1.489980e-002, -1.484403e-002, 1.008272e-002, 2.340568e-002, -4.114850e-003, -1.106748e-002, -2.827208e-002, 1.687930e-002, -8.555585e-003, -7.495388e-003, 2.408692e-002, -4.137701e-003, 1.108662e-003, -1.812195e-002, -2.889085e-002, 4.823542e-003, 4.921798e-003, 2.065823e-002, 1.898155e-002, 2.540579e-002, 1.803034e-002, -3.991301e-003, 4.704741e-003, -1.200187e-002, 1.665342e-002, -8.393650e-003, -7.303949e-003, 4.069773e-002, 1.864762e-002, 2.828461e-002, 3.589955e-003, 3.508476e-003, 9.766159e-003, 3.906729e-003, 6.282112e-003, 2.986070e-002, 3.425941e-002, -9.533957e-003, -4.792037e-003, -1.438594e-002, -3.047487e-002, -4.200141e-003, -1.054514e-002, 1.632386e-002, 2.073477e-002, 8.434000e-003, 1.210115e-002, 7.489355e-003, -9.903036e-004, -1.052822e-002, 2.672275e-004, 1.219836e-002, 2.356786e-003, -2.796962e-002, 2.534644e-002, -1.136865e-002, 2.941646e-002, -4.201084e-002, -4.150169e-002, -5.267668e-004, -3.603669e-003, 2.328456e-003, -9.606323e-003, 9.035791e-004, 1.627239e-002, 9.613033e-004, -1.829679e-003, -1.103317e-002, -1.829679e-003, 9.613033e-004, 1.627239e-002, -2.548434e-003, -1.967691e-002, 2.072129e-002, 6.096705e-002, 1.630483e-002, -1.168337e-002, 3.888349e-002, 1.976820e-003, 2.020482e-002, -1.253854e-002, -1.171615e-001, -2.212425e-003, 1.393757e-002, -1.901275e-002, 1.095431e-002, -1.955567e-002, 5.272119e-003, -4.377772e-002, -7.473904e-002, 2.899587e-002, 1.500031e-001, 1.070246e-001, 1.566684e-002, -6.489374e-002, -2.892143e-003, 7.530922e-004, 6.221197e-003, 6.981758e-003, -2.737923e-002, 6.981758e-003, 6.221197e-003, 7.530922e-004, 9.372692e-003, -4.582650e-002, 3.352548e-002, 2.428038e-002, -4.889568e-002, 8.956247e-002, 2.270324e-002, 1.436930e-002, -7.966631e-003, -4.445262e-002, 5.822894e-002, -7.959673e-002, -8.739353e-003, 4.925833e-002, 2.128373e-002, 2.829399e-002, 2.607146e-002, -9.990562e-002, -8.346527e-002, 1.198234e-001, 1.225652e-001, 1.220165e-001, -8.047486e-002, -6.367520e-002, 4.171173e-004, 2.268233e-003, -7.900717e-003, -2.066644e-002, -4.455630e-002, -2.066644e-002, -7.900717e-003, 2.268233e-003, 1.285651e-002, -2.076790e-002, -2.938874e-002, 7.318201e-002, -3.279798e-003, 2.184625e-002, -6.148008e-003, -4.877551e-003, 9.246750e-003, -5.432497e-003, -7.581284e-002, -2.802319e-002, -7.211881e-002, 4.591886e-002, 1.208633e-003, -5.394735e-003, 2.154236e-002, -2.593129e-002, -6.655572e-002, 1.804038e-002, 3.293654e-002, 7.303444e-002, -1.667054e-002, -6.361412e-002, 1.492975e-003, 1.372508e-002, -3.093467e-003, 1.062340e-003, -1.491507e-002, 1.062340e-003, -3.093467e-003, 1.372508e-002, 2.087966e-002, -4.754973e-003, 5.945775e-003, 1.145280e-003, 2.437200e-002, 4.929166e-002, -2.324419e-002, -4.757270e-003, 1.938731e-002, 1.204232e-001, 2.836909e-002, 5.360941e-002, 1.160240e-001, -7.672498e-003, -2.773407e-002, 4.397315e-002, -4.037199e-002, 4.183807e-002, -5.969012e-002, 4.548988e-003, -5.759089e-002, -3.869681e-002, -5.156714e-002, -1.264462e-001, -2.795199e-002, 3.141028e-003, -1.030313e-002, 3.141028e-003, -6.926763e-003, -1.481369e-002, 8.418296e-002, 9.907059e-002, 1.165617e-003, -4.473910e-002, -7.609879e-004, -4.473910e-002, -2.987409e-002, -3.959520e-001, -2.333401e-002, 9.321131e-002, 3.199742e-002, 1.546147e-002, 8.475115e-002, 1.546147e-002, 3.071422e-002, 1.653992e-001, -2.208250e-002, -2.443259e-001, -2.335780e-002, -1.159935e-002, 3.549295e-002, -1.159935e-002, 2.240143e-002, 6.517235e-002, 5.936510e-002, -2.726506e-002, 3.006511e-002, -3.330289e-002, 2.695361e-002, -3.330289e-002, -5.793202e-002, -5.297576e-002, 2.774068e-002, 1.534530e-002, -2.375158e-003, -2.198436e-003, 4.448554e-002, -2.198436e-003, 5.661409e-002, 3.345567e-002, -1.122124e-001, 3.585817e-002, -3.976226e-002, -7.582250e-003, -1.051440e-001, -7.582250e-003, 2.136765e-002, -6.001811e-002, -2.235679e-001, 1.056679e-001, 2.823050e-002, -3.309644e-002, 6.816900e-002, -3.309644e-002, 4.300090e-002, -6.095190e-002, 2.867509e-002, -8.072815e-002, 1.019442e-002, -2.125683e-002, 7.091534e-002, -2.125683e-002, -4.777508e-002, 8.103633e-002, -3.078073e-002, 1.938225e-002, -9.750785e-003, 1.755979e-003, 6.767880e-002, 1.755979e-003, -1.095537e-003, 2.593048e-002, -3.127054e-002, -1.914573e-001, 4.103213e-004, 1.179961e-002, -2.160889e-002, 1.179961e-002, 3.405634e-002, -2.030525e-001, -1.903726e-001, 1.848526e-002, -1.725142e-002, -3.661407e-003, -1.036585e-001, -3.661407e-003, -1.274809e-002, -6.274688e-002, 4.429046e-002, 3.438761e-002, -3.134476e-004, 4.236368e-002, -1.528822e-004, 4.236368e-002, -4.300719e-003, 1.819478e-002, 7.224512e-002, 7.618848e-002, 2.869256e-004, 1.200868e-002, -1.962640e-002, 1.200868e-002, 2.365771e-002, 1.293609e-001, 5.031802e-002, 4.065585e-003,


© ISO/IEC 2004 — All rights reserved

Copyright International Organization for Standardization
Provided by IHS under license with ISO
No reproduction or networking permitted without license from IHS
Not for Resale

5.148566e-003, 6.896429e-003, -8.133836e-002, 6.896429e-003, -5.262672e-002, -1.609743e-001, -1.254790e-002, 1.576785e-001, 1.318551e-002, 1.573647e-002, 7.748267e-003, 1.573647e-002, -7.556057e-002, -6.468571e-003, 6.131834e-003, -1.593468e-002}, {8.309909e-006, 1.191804e-003, -1.315199e-003, -1.190982e-003, 8.540123e-003, -4.469708e-005, -3.999496e-003, 1.722634e-003, -4.119331e-003, 1.722634e-003, -3.999496e-003, -4.469708e-005, 8.540123e-003, -1.190982e-003, -1.315199e-003, 1.191804e-003, 1.649062e-003, 8.009610e-003, 1.331501e-003, -1.948329e-003, 4.951777e-003, -5.810571e-003, 2.430882e-002, -1.378633e-003, -1.609230e-002, 2.325074e-002, -5.800668e-003, -4.162300e-003, 1.185918e-002, -1.927321e-003, -3.757511e-003, -4.330384e-003, 1.729934e-002, -2.102538e-002, -1.427236e-002, -4.077059e-003, 1.477264e-002, -1.234616e-002, 2.884727e-003, -1.285022e-002, 1.008381e-002, 1.331368e-002, 1.572930e-002, 1.333548e-003, 7.643079e-003, -9.837321e-003, 6.293658e-003, -1.186885e-002, 8.379868e-003, 1.152746e-002, -2.686093e-003, 1.060867e-002, 1.022203e-002, -1.010216e-002, 1.161574e-002, 2.144704e-002, -1.196135e-002, 5.201298e-004, 3.868313e-003, -2.701690e-002, -2.623637e-002, -1.798542e-002, 2.238221e-002, 1.183139e-002, -2.771930e-003, 1.135204e-002, 2.421036e-002, -7.587092e-003, 3.958773e-002, 6.584842e-003, -2.200448e-002, 1.771572e-002, -2.231876e-002, 2.480470e-002, 1.296661e-002, -1.180091e-002, 6.230012e-003, 6.811242e-003, 2.991729e-003, 4.505323e-003, 3.934211e-002, -8.196738e-003, 3.057133e-002, 2.517032e-002, 4.924290e-004, 3.183203e-002, -1.487298e-003, 1.153792e-002, -5.325992e-002, -2.115574e-002, 6.886846e-003, -2.582286e-002, -1.827463e-002, 7.871545e-003, 2.264172e-002, -9.093612e-003, 1.324166e-002, -1.200059e-002, 4.921674e-003, -1.172826e-004, 3.188169e-002, -8.639622e-003, -2.509975e-002, -4.009966e-002, -2.485833e-002, 1.674890e-002, -3.766343e-002, -1.298534e-002, -3.482334e-002, 3.118234e-002, 1.134589e-002, -1.026902e-002, 2.020404e-003, -1.548251e-002, 9.016613e-003, 3.575595e-002, 1.201175e-002, 1.627211e-002, 2.688862e-002, 2.403969e-002, -6.409280e-003, 2.549707e-002, 2.113833e-002, 1.941004e-002, -3.092347e-002, 3.311424e-002, -2.314300e-003, -1.156882e-002, -1.446081e-003, -7.377538e-003, -1.842918e-002, 4.576245e-003, 2.245358e-002, 4.576245e-003, -1.842918e-002, -7.377538e-003, -1.383989e-002, 4.753533e-002, -3.167841e-002, -1.007227e-003, -4.814082e-002, -2.694692e-002, -5.272960e-002, 5.173015e-002, 4.883107e-003, 6.035164e-002, -1.329488e-004, 3.718526e-002, -1.848866e-002, 2.984741e-002, -1.470927e-002, -3.524939e-002, -3.261961e-002, -4.255812e-002, -2.275451e-002, 6.095755e-002, -1.972614e-002, -1.484792e-002, 9.467993e-002, -3.301321e-002, -1.904575e-003, 6.222831e-003, -4.893616e-003, 3.168111e-003, 5.674749e-002, 3.168111e-003, -4.893616e-003, 6.222831e-003, -2.581870e-002, -6.533814e-003, -2.117432e-002, 3.939523e-003, 2.131285e-002, -1.897608e-002, -2.843945e-002, 3.063989e-002, -5.076427e-002, -4.859309e-002, -6.074408e-002, -6.124905e-002, 6.446860e-002, -8.785162e-003, 7.519119e-002, -4.731259e-002, -1.999337e-002, -2.755163e-002, 4.249073e-002, -2.219177e-002, 4.266838e-002, 1.317879e-001, 9.500932e-002, 3.793759e-002, -1.427963e-003, 4.894856e-003, 8.612170e-003, -3.945365e-003, -9.186167e-003, -3.945365e-003, 8.612170e-003, 4.894856e-003, -2.090119e-002, -4.162560e-003, 3.597313e-002, -3.514455e-002, 4.927649e-003, -3.453746e-002, -1.093659e-002, -4.176519e-003, -1.877656e-002, 1.339550e-002, -1.153136e-002, -3.863973e-002, 1.282153e-002, 4.026526e-002, -6.670355e-002, 5.566400e-002, 2.773161e-002, -7.315024e-002, -4.419847e-002, 3.050669e-002, -3.668675e-002, 3.060112e-002, -1.044487e-001, -5.873943e-004, 4.786929e-003, -8.630626e-003, -1.884133e-002, -9.530664e-003, 1.321197e-002, -9.530664e-003, -1.884133e-002, -8.630626e-003, -8.886870e-003, -3.389112e-002, 3.629457e-002, -1.297571e-002, -3.027256e-002, 2.893690e-003, -3.131038e-002, -1.188121e-002, -8.451140e-002, -4.823960e-002, -9.239800e-002, -4.779490e-003, -4.320896e-002, -5.925035e-002, -1.166512e-002, -5.092357e-002, -2.197648e-002, 5.979786e-003, -2.260760e-002, 4.535438e-002, -9.271617e-002, 1.158168e-002, -1.639791e-002, -6.682857e-003, 7.346626e-003, 1.936595e-002, -4.967489e-002, 1.936595e-002, -4.235163e-002, -2.195825e-002, 5.104079e-002, -6.887701e-002, 1.765053e-002, 1.792404e-002, 2.741145e-001, 1.792404e-002, 2.609946e-002, 3.141544e-002, 2.048498e-002, -6.675870e-002, -4.345514e-002, -3.439253e-002, 2.054480e-001, -3.439253e-002, 9.614458e-003, 2.943905e-001, -1.698046e-002, -3.209345e-001, 7.553992e-003, -2.107857e-002, -4.656304e-003, -2.107857e-002, -1.330148e-002, -4.980777e-002, -8.535680e-002, -4.896920e-002, -1.871371e-002, 1.617115e-002, 8.822267e-003, 1.617115e-002, -7.188744e-002, -5.125537e-002, -1.398999e-001, -6.317834e-002, -7.729533e-003, -1.063752e-002, 3.616646e-002, -1.063752e-002, 3.592947e-002, 8.428853e-002, -2.433727e-001, 8.258099e-002, 3.177964e-002, -4.036264e-002, -1.306646e-002, -4.036264e-002, 2.854756e-002, -1.267530e-002, 4.953810e-002, -3.063572e-002, 2.216930e-003, 1.011181e-002, -1.137725e-001, 1.011181e-002, -2.927604e-002, 3.097430e-002, 1.491823e-002, -7.230151e-002, 4.363635e-005, -2.218046e-002, 2.252900e-002, -2.218046e-002, 5.588948e-002, -3.744477e-002, 5.375919e-002, -1.531055e-001, 2.767434e-002, -8.557848e-003, -1.161752e-002, -8.557848e-003, -2.545588e-002, -3.734053e-003, -1.460733e-001, 5.476477e-002, 1.869286e-002, 1.521821e-002, -3.661435e-002, 1.521821e-002, 9.920746e-002, -1.073597e-001, 1.661669e-003, 1.584841e-002, 1.768364e-003, 1.679382e-002, 8.194798e-002, 1.679382e-002, 2.880653e-002, 9.550777e-002, 1.185906e-002, -9.378696e-002, 1.460245e-002, 1.264555e-002, -7.605529e-003, 1.264555e-002, -8.099129e-003, -5.853144e-002, -3.151025e-002, 1.179983e-001, -4.374838e-002, -1.532828e-002, -6.153755e-002, -1.532828e-002, 6.639324e-002, -1.626639e-001, 2.938105e-005, 6.189611e-002, -

© ISO/IEC 2004 — All rights reserved


--`,,```,,,,````-`-`,,`,,`,`,,`---

Copyright International Organization for Standardization
Provided by IHS under license with ISO
No reproduction or networking permitted without license from IHS
Not for Resale

2.050701e-002, 3.271774e-002, 4.635240e-002, 3.271774e-002, 9.659430e-002, 1.198374e-001, -2.576063e-001, 5.307392e-002, 4.832717e-003, 2.689402e-002, 1.077531e-002, 2.689402e-002, -3.913098e-002, 1.477455e-001, -1.567003e-002, 4.819443e-002},
{-5.093077e-004, -1.461040e-003, -4.063148e-003, -1.087173e-003, -5.680507e-004, -1.035180e-003, 1.936618e-003, -4.785703e-003, 2.201550e-002, -4.785703e-003, 1.936618e-003, -1.035180e-003, -5.680507e-004, -1.087173e-003, -4.063148e-003, -1.461040e-003, -3.197271e-004, 1.006585e-002, -1.236366e-002, 8.656395e-003, 3.652765e-003, 1.091156e-002, 1.468356e-002, 5.851177e-004, 2.397787e-002, 1.412653e-002, 8.248135e-003, -1.730970e-003, 3.782780e-003, 4.041675e-003, -1.820456e-002, -7.183624e-003, 4.836125e-003, -2.769055e-002, -1.787810e-002, -5.475195e-003, -7.667699e-003, -1.080901e-002, 2.934139e-003, -2.301043e-002, 2.808617e-002, 4.700284e-002, 1.084366e-002, -3.208792e-003, 4.129815e-003, 5.914354e-003, 2.221564e-003, 5.063778e-004, 8.005981e-003, -6.382780e-003, 3.307463e-003, -1.601274e-002, 3.053973e-003, 6.861154e-004, 1.220921e-002, 4.156664e-002, 3.475955e-002, 1.238538e-002, 1.067425e-002, -8.264997e-004, 4.088389e-003, 1.531980e-002, -1.382441e-003, -4.236188e-003, 9.081376e-003, -5.843378e-003, -1.297588e-002, -1.020295e-002, -1.409395e-002, -7.621340e-003, -2.658290e-002, 1.236445e-002, -1.235958e-002, -6.285039e-003, -2.457729e-003, -3.959974e-002, 6.546211e-003, -3.887775e-002, -1.556335e-002, -5.608794e-003, -5.443536e-003, -1.559558e-002, 1.398063e-002, 4.392865e-002, 3.664237e-002, -3.107884e-003, 9.099299e-003, -4.636478e-003, -3.156240e-002, -4.659889e-002, -2.333579e-002, 2.642810e-004, 1.808495e-002, -5.184381e-003, 2.213191e-002, -6.584465e-003, 1.296423e-003, -6.477495e-003, -1.311708e-002, 3.520066e-002, 2.481187e-002, 3.522017e-002, -1.811252e-002, -3.098058e-002, 4.148567e-002, -1.197960e-002, -1.129505e-002, -1.701751e-002, 3.810074e-002, 4.029402e-002, 3.960294e-002, -1.561544e-002, 1.373002e-002, 2.553135e-002, 3.985041e-002, 3.804001e-002, 3.659098e-002, -4.139527e-002, -3.688878e-002, 1.326126e-002, 1.829863e-002, 1.710638e-002, -5.587721e-002, -3.130054e-002, 3.410058e-002, 2.237030e-002, 3.114887e-002, -1.631023e-002, -2.499154e-003, 4.236962e-003, -8.340209e-003, -6.421884e-003, 8.099936e-003, -6.421884e-003, -8.340209e-003, 4.236962e-003, 6.833722e-003, 2.852966e-002, -1.730124e-002, -2.366870e-002, -1.660311e-002, -4.457356e-002, -1.558560e-002, -2.317824e-002, 2.110503e-002, -8.377775e-003, 2.140814e-002, 6.478388e-002, -1.229996e-001, -1.783091e-002, -6.965680e-002, 3.775590e-002, -3.750806e-002, -8.801184e-002, -7.990763e-002, 3.103279e-002, 4.951307e-002, 8.650939e-002, -1.529773e-001, -1.351424e-001, 1.412395e-004, 8.289947e-003, -3.393055e-003, -2.240696e-002, -2.655296e-002, -2.240696e-002, -3.393055e-003, 8.289947e-003, -1.121924e-002, 2.743977e-002, -5.062886e-002, 3.899132e-002, 5.854358e-003, -6.847151e-002, -1.483790e-002, 4.633399e-002, 2.835495e-002, 9.663101e-002, -7.493061e-002, -7.472848e-002, -4.827507e-002, 1.430892e-002, 2.461410e-002, -4.607370e-002, 1.540001e-003, 4.302155e-002, -2.564338e-002, -9.637965e-002, -6.994675e-002, 1.067345e-001, -3.327751e-002, -1.556225e-002, -3.372909e-004, 7.011766e-003, 1.154383e-003, 1.466599e-002, -3.910765e-002, 1.466599e-002, 1.154383e-003, 7.011766e-003, 1.454838e-003, 3.430317e-002, -4.208769e-002, -1.606739e-002, -4.721853e-002, 6.080958e-003, -2.081821e-002, -3.727974e-002, 2.671942e-002, 2.251777e-002, 1.318854e-002, 2.707025e-003, 2.077953e-002, 9.100123e-002, -7.071840e-002, 4.551172e-002, -1.089613e-002, 8.162332e-002, -6.252519e-002, 7.748037e-004, -2.920260e-002, -1.790118e-002, -4.936311e-002, -2.570525e-003, 2.185897e-003, 4.769994e-003, -7.855533e-003, 1.972060e-002, -3.435967e-002, 1.972060e-002, -7.855533e-003, 4.769994e-003, 3.531095e-002, -5.980351e-002, -1.357633e-002, -4.309509e-004, -1.558824e-003, -6.641288e-002, -4.780419e-002, 1.739173e-002, 3.378525e-002, 4.103340e-002, 1.523661e-002, -8.853758e-003, 2.666133e-002, 4.571171e-002, -6.065281e-002, 6.653567e-002, 1.040273e-002, -2.448440e-002, -3.381971e-002, 2.252539e-002, 3.918288e-002, -4.466506e-003, 6.060772e-003, 6.359465e-002, -4.719751e-003, 1.877040e-002, -1.725058e-002, 1.877040e-002, -3.956073e-002, 1.415044e-002, 8.935300e-002, 1.056629e-001, 3.816344e-003, -2.615838e-002, -3.826902e-002, -2.615838e-002, -4.469145e-002, -1.209085e-001, -7.871345e-003, -9.536467e-002, 5.706937e-003, 2.617571e-002, 1.948727e-002, 2.617571e-002, 1.287538e-003, -3.542339e-002, 3.956013e-002, 2.933708e-001, -1.594272e-002, -5.809557e-004, 1.845112e-002, -5.809557e-004, -5.085245e-002, 7.142088e-002, 3.610787e-002, -7.448331e-004, 2.326875e-002, 3.120847e-003, -3.083447e-002, 3.120847e-003, 4.331009e-002, 3.383607e-002, 2.772127e-002, 1.131078e-001, -2.486450e-002, 2.292355e-002, 4.855964e-002, 2.292355e-002, -9.496087e-002, 7.389869e-003, 1.689696e-001, 1.900394e-001, 2.243947e-003, -6.857330e-003, 7.804228e-002, -6.857330e-003, -1.852343e-001, 1.499523e-001, -1.144705e-001, -1.113627e-002, 8.133076e-003, 2.970935e-002, -4.567395e-002, 2.970935e-002, 2.437712e-002, 9.040488e-002, -6.138840e-002, -1.506710e-001, -1.785027e-002, 1.415961e-002, -2.243323e-002, 1.415961e-002, -1.008834e-001, 3.605769e-002, -7.717246e-002, -4.544835e-003, 1.638171e-002, 5.110933e-002, -8.964870e-002, 5.110933e-002, -2.176850e-002, 2.079018e-002, -1.033332e-001, -9.317373e-002, -1.843289e-002, 5.724823e-002, -1.277418e-001, 5.724823e-002, -1.382433e-002, 7.668316e-002, -8.646447e-002, -1.731351e-002, 4.243573e-003, 1.399290e-002, 8.773547e-003, 1.399290e-002, -2.182376e-001, 1.695528e-001, 6.092600e-002, 5.766816e-002, -6.125252e-003, -5.477321e-005, 3.114028e-002, -5.477320e-005, -5.514106e-002, 3.036806e-002, 1.285053e-002, -5.705523e-002, 7.256524e-003, 1.853635e-002, 1.707511e-001, 1.853635e-002, -6.375001e-002, -4.058105e-002, 1.792048e-001, -7.245788e-003,


© ISO/IEC 2004 — All rights reserved

Copyright International Organization for Standardization
Provided by IHS under license with ISO
No reproduction or networking permitted without license from IHS
Not for Resale

2.270330e-002, -1.718887e-002, 1.565822e-001, -1.718887e-002, -1.275999e-001, -1.708320e-002, -1.590573e-001, 8.222244e-002, -6.328089e-003, 2.313663e-003, -2.609773e-002, 2.313663e-003, -2.740514e-002, 8.433126e-002, 5.962374e-002, 4.353343e-002},
{4.701014e-005, -1.438950e-003, 6.105572e-004, -1.506156e-003, 1.589915e-003, 6.373575e-003, 2.126757e-003, -9.890404e-003, 2.692804e-002, -9.890404e-003, 2.126757e-003, 6.373575e-003, 1.589915e-003, -1.506156e-003, 6.105572e-004, -1.438950e-003, 4.658918e-004, -1.064793e-002, 8.103856e-003, -2.459576e-003, 4.859098e-003, 1.237916e-003, 1.143932e-002, -2.054488e-002, 6.740724e-003, -1.679328e-002, -1.427447e-004, 2.196279e-002, -4.289169e-004, -1.018461e-002, 8.069028e-004, -1.732051e-003, 8.833017e-004, 8.141932e-003, -4.027262e-004, 1.962904e-002, -5.134535e-003, 1.056926e-002, 2.825483e-003, 8.272307e-003, 3.633098e-002, 2.045690e-002, -1.965518e-004, -8.479796e-003, -1.906183e-002, -9.148187e-003, -3.716900e-003, -3.052040e-003, -1.684141e-003, -6.222232e-003, 1.771514e-002, 2.180690e-002, -3.958833e-003, -3.200727e-003, 1.785764e-002, 1.244104e-003, 5.668753e-003, 7.871639e-003, -1.211240e-002, 1.428857e-002, -1.055830e-002, 1.452771e-002, -1.081179e-002, 5.487632e-003, -2.109148e-002, 2.854808e-003, 2.060624e-002, -1.972479e-002, 3.717647e-003, -2.324320e-002, 1.064836e-002, 4.008095e-002, -1.579986e-003, -1.718482e-002, -2.380588e-003, -1.288689e-002, 1.290654e-002, 8.677040e-003, -1.699652e-002, 2.275006e-003, -1.405947e-002, -3.055228e-002, 1.062374e-002, 3.197128e-002, 3.532322e-002, 1.236837e-002, 1.551994e-003, 2.659687e-002, 5.125856e-004, -4.449741e-003, 1.535582e-002, 5.264229e-002, 5.746728e-003, 2.125019e-002, -9.109739e-003, 9.439851e-003, 9.436468e-003, 1.989546e-003, -3.449024e-003, 6.844703e-003, -1.308087e-002, -2.987922e-002, 7.648049e-003, -9.162688e-003, -4.160693e-002, 7.118504e-004, -4.214213e-002, 4.229914e-004, -1.657323e-002, 2.097550e-002, -1.039832e-002, 1.695903e-003, 9.889056e-004, 1.734278e-002, -4.113582e-003, -4.064737e-003, -6.612291e-002, 1.369230e-002, -4.088277e-002, 4.237793e-002, 3.994425e-002, -4.351965e-002, -3.214448e-002, -3.076016e-002, 5.854779e-003, 2.267279e-002, 4.902059e-005, -1.406178e-002, -1.001750e-002, 1.268985e-002, 1.498947e-002, -2.540380e-003, 4.228579e-002, -2.540380e-003, 1.498947e-002, 1.268985e-002, -8.172755e-003, -6.313420e-003, 6.492294e-002, -1.160355e-002, -3.637141e-003, -4.743264e-002, -2.372624e-002, 6.276431e-002, 4.389534e-002, -5.345201e-003, -4.912125e-002, -5.903039e-002, -7.623052e-002, -1.636128e-002, 5.097320e-003, 4.011140e-002, -1.454460e-002, -6.873235e-002, 2.432331e-003, 1.931034e-002, -6.461208e-003, 9.920657e-002, -8.348178e-002, -6.641494e-002, 5.331680e-003, -7.847008e-003, 2.021488e-002, -7.254435e-003, 2.489403e-002, -7.254435e-003, 2.021488e-002, -7.847008e-003, 1.607005e-002, -3.273106e-002, 7.528787e-003, -1.056418e-001, -4.040585e-002, 1.227042e-002, 2.517656e-002, 3.395329e-002, 9.098933e-003, -1.176551e-002, 9.165075e-002, 2.375132e-002, -4.246294e-002, 4.257684e-002, -7.873274e-002, -5.005426e-004, 8.325087e-002, 3.546370e-002, -1.936144e-003, -1.154392e-001, 3.863631e-002, 2.023866e-002, 2.498296e-003, 1.577327e-002, 9.543313e-003, -1.144323e-003, 4.573459e-003, -8.625202e-003, -3.993652e-003, -8.625202e-003, 4.573459e-003, -1.144323e-003, -1.017574e-002, 3.260292e-003, 4.554737e-002, 4.765837e-002, -3.301269e-002, 5.490211e-002, -9.704461e-003, -1.983332e-002, 4.844217e-002, -3.457238e-002, 1.481515e-002, -4.204753e-002, 5.193371e-002, 3.378208e-003, -3.402037e-002, -3.117784e-002, 4.885182e-002, 9.443414e-002, -6.624919e-003, -9.292935e-002, 7.855832e-002, 3.302237e-002, 3.391671e-002, 2.972594e-002, -4.810487e-003, 1.032984e-002, 1.870730e-002, -5.401700e-006, -1.999280e-002, -5.401700e-006, 1.870730e-002, 1.032984e-002, 1.937255e-002, -4.669505e-002, -1.432881e-002, 4.959985e-004, -7.671131e-002, 3.340901e-002, 4.737443e-002, -1.875704e-002, -3.794058e-002, -3.718262e-002, -4.618627e-002, 5.384426e-002, 1.556273e-002, 3.754540e-002, -3.022721e-004, 3.837332e-002, 3.995502e-002, -4.213896e-003, 1.514974e-002, -9.468935e-003, 1.582510e-002, 4.002333e-002, -5.585089e-002, 8.989604e-002, 2.329132e-002, -3.415329e-002, -2.292052e-002, -3.415329e-002, 8.893557e-002, 7.797079e-002, 8.511932e-002, 2.013758e-002, 1.904289e-002, 5.064620e-002, -2.948956e-001, 5.064620e-002, -6.529669e-002, -4.157668e-002, -4.710374e-002, -4.218513e-002, -1.823417e-002, 1.239494e-002, -1.792219e-001, 1.239494e-002, -1.266813e-001, 1.971639e-001, 1.897524e-002, -4.199015e-002, 4.529604e-003, -6.106170e-003, -2.083135e-002, -6.106170e-003, 4.167456e-002, 1.335394e-001, -6.616913e-002, 1.963162e-002, -3.007339e-002, -3.000001e-002, -7.965067e-002, -3.000001e-002, -1.729576e-002, 7.352049e-002, -4.196370e-002, -2.191623e-002, -2.227831e-002, -9.396522e-004, -1.241446e-002, -9.396522e-004, -7.714053e-002, 8.456987e-002, 1.263415e-001, 1.036709e-002, 1.229128e-002, -1.569688e-002, -8.763309e-002, -1.569688e-002, -7.428375e-002, -9.601830e-002, 1.438609e-001, 8.270879e-002, 6.744967e-003, -4.512456e-002, -1.296058e-002, -4.512456e-002, -7.274347e-002, -1.155652e-003, -4.593395e-002, 8.987172e-002, 4.113864e-002, 1.339841e-002, -1.468239e-003, 1.339841e-002, 2.089119e-001, -1.194661e-001, 6.210027e-002, -5.978114e-002, 6.800632e-004, -5.131264e-002, 1.943572e-001, -5.131264e-002, -9.247883e-002, -9.183258e-002, -6.864903e-003, -8.633984e-002, -2.467955e-002, -1.506237e-002, -4.656022e-002, -1.506237e-002, 2.715668e-002, 1.852060e-001, -7.588952e-002, 5.466350e-002, -3.962067e-003, 1.886982e-003, 1.684386e-002, 1.886982e-003, 1.695224e-001, -2.210024e-002, -4.427199e-002, -1.664477e-001, -1.392492e-002, -2.532858e-002, -1.768644e-002, -2.532858e-002, -5.598584e-002, -3.608480e-005, -7.349707e-003, 6.791234e-002, -1.835047e-002, -2.372987e-002, -2.827812e-002, -2.372987e-002, 3.291504e-002, -2.213100e-001, -7.972556e-002, 3.419823e-002,

© ISO/IEC 2004 — All rights reserved


Copyright International Organization for Standardization
Provided by IHS under license with ISO
No reproduction or networking permitted without license from IHS
Not for Resale

2.659499e-003, -4.421319e-002, 9.595270e-002, -4.421319e-002, -1.823235e-002, -2.926356e-003, -1.546350e-001, -1.122659e-001, 2.117163e-002, -4.339651e-002, 4.124466e-002, -4.339651e-002, 2.799306e-002, 7.595908e-002, -4.442889e-002, -1.408943e-001}, {-4.190889e-004, -1.868746e-003, 9.964341e-004, 1.460878e-003, -6.857568e-003, -2.612066e-003, -4.707960e-003, 8.663514e-003, -1.438043e-003, 8.663514e-003, -4.707960e-003, -2.612066e-003, -6.857568e-003, 1.460878e-003, 9.964341e-004, -1.868746e-003, 1.221443e-003, -2.201169e-003, 1.281296e-003, 1.496150e-002, 1.089039e-002, 1.350088e-002, 6.031161e-003, -2.659278e-003, -7.138473e-003, 1.713721e-002, -1.421874e-002, -8.419246e-003, 5.843618e-004, 3.386693e-003, 4.084870e-003, -7.116662e-004, -7.983180e-004, 1.686145e-002, 1.023600e-002, 1.910368e-003, 7.013569e-003, 1.179538e-002, 3.094849e-002, -8.602065e-003, 9.961858e-003, 2.722774e-002, -1.590952e-002, 2.335544e-002, 6.661363e-003, 1.440761e-002, 3.032420e-002, -8.609857e-003, 3.298172e-003, 3.469952e-003, 2.258976e-002, -1.601009e-002, 2.266237e-002, 1.339196e-002, 1.732566e-002, -1.035259e-002, -2.045557e-002, -1.553358e-002, -3.229111e-002, 1.588465e-003, -7.401326e-003, -1.914547e-002, 2.795621e-002, 2.728437e-002, -2.381925e-003, -7.661082e-003, -9.632942e-003, -3.084872e-002, 3.760835e-003, 6.131745e-003, -2.666183e-002, 7.612913e-003, -1.617735e-002, -1.061128e-003, -2.530796e-002, 3.039844e-003, 1.381284e-002, -1.990560e-002, -1.202526e-002, 6.630198e-004, -4.763529e-003, 3.533963e-002, 1.536173e-002, -9.649101e-003, 1.126875e-002, 2.180077e-002, 7.836153e-003, 2.085168e-002, 1.382062e-002, -2.405302e-002, 1.875487e-002, 4.138907e-004, 1.180660e-003, -1.444950e-002, 1.531248e-003, 1.155119e-002, 1.199008e-002, -5.955417e-003, 3.023032e-002, 3.242586e-002, -8.371314e-003, 1.230202e-002, 1.475458e-002, -9.128667e-003, 4.284751e-002, 6.379027e-003, -4.721486e-003, 8.499282e-004, -3.481250e-003, -1.588929e-002, 2.412107e-002, -6.214291e-003, -1.506759e-002, 2.690580e-002, 1.311844e-002, -7.352243e-003, 1.254759e-003, 1.407693e-002, 7.005274e-002, 2.925869e-002, 7.081968e-002, -8.870117e-004, 3.578897e-002, 2.528009e-002, 5.985744e-003, -2.217055e-002, 1.829315e-002, 1.157322e-002, 4.518576e-003, 7.027252e-003, 2.905070e-002, -2.888219e-003, -2.089239e-002, -2.888219e-003, 2.905070e-002, 7.027252e-003, 1.022237e-002, -2.579533e-002, -2.233245e-002, -3.975116e-002, 4.371601e-003, -1.346226e-002, -2.488805e-002, -4.239099e-003, -7.653918e-003, 3.115231e-003, -3.505417e-002, -1.944083e-002, -6.218675e-003, -7.416273e-002, -5.021507e-002, -1.218705e-002, -7.148308e-002, -3.222786e-002, -9.110433e-002, 1.318786e-003, -6.172485e-002, -6.033642e-002, 3.354644e-002, -6.457410e-002, 3.829901e-003, 1.167825e-002, 1.127067e-002, -8.785116e-003, 4.347234e-003, -8.785116e-003, 1.127067e-002, 1.167825e-002, -1.899280e-002, 6.057641e-004, 2.438370e-004, -2.235509e-002, -6.273232e-002, 4.961560e-002, -5.721374e-003, -1.535907e-002, -2.810059e-002, -5.607651e-002, 3.950006e-002, -2.898876e-002, 2.304830e-002, 1.659885e-003, -5.817748e-002, -1.365308e-002, 1.357593e-002, -3.556522e-002, 2.656804e-002, 4.749121e-002, 2.356358e-002, -2.410501e-002, 1.914621e-002, -5.638814e-002, -4.777815e-003, 3.488476e-003, -2.085614e-002, 1.089033e-002, 1.715082e-002, 1.089033e-002, -2.085614e-002, 3.488476e-003, -6.239471e-003, -2.614214e-003, 4.219127e-002, 1.851529e-002, -5.552414e-002, 2.932195e-002, -3.162826e-002, -5.204454e-002, 3.019114e-002, -3.316204e-002, 2.217589e-002, 3.613105e-002, -3.538802e-002, 9.383659e-002, -4.995842e-002, 4.725247e-002, 2.900380e-002, -1.606095e-002, -3.773530e-002, -7.996845e-003, -1.311964e-001, 1.492165e-002, 1.178868e-002, 4.885005e-002, -3.989750e-003, 5.083104e-005, -6.544152e-004, 1.384187e-002, -5.115565e-002, 1.384187e-002, -6.544152e-004, 5.083104e-005, -1.697145e-002, -5.044474e-002, -3.192552e-003, -3.258676e-003, 3.999475e-002, 3.598574e-002, 1.803851e-002, -1.526615e-003, -2.209729e-002, 1.338293e-002, -2.503076e-002, -3.144351e-003, 7.249899e-002, -1.536988e-003, 7.298553e-002, -1.178441e-001, 1.156499e-002, -2.984546e-002, 1.158780e-001, -7.137211e-003, -3.456132e-002, -1.053041e-001, 3.119903e-002, -7.301954e-002, -2.212996e-002, -4.224487e-002, 7.392070e-002, -4.224487e-002, 1.456360e-002, 5.378811e-002, -9.813039e-002, 9.113237e-002, -2.193135e-002, 5.924783e-002, -1.990939e-001, 5.924783e-002, 7.712833e-003, -3.786861e-001, -4.416226e-002, 9.515095e-002, -2.998968e-004, 2.025350e-002, 8.221112e-002, 2.025350e-002, 9.550839e-002, 1.134306e-001, 2.071035e-002, -9.287397e-002, 1.782858e-002, -1.173087e-002, 4.209095e-002, -1.173087e-002, 3.088156e-002, -3.099917e-002, 6.702205e-002, -1.750503e-001, 3.225760e-002, -2.225998e-002, 1.138837e-002, -2.225998e-002, 1.566616e-002, 1.209234e-001, 1.277785e-001, -2.476265e-002, 1.632228e-002, 2.179046e-003, -7.340411e-002, 2.179046e-003, 3.430823e-002, -3.881778e-002, -5.619743e-002, -4.948278e-002, -9.181663e-003, -1.440530e-002, -8.557186e-002, -1.440530e-002, -1.623457e-002, -1.250262e-001, -5.094098e-002, -1.295611e-002, -4.517120e-003, -1.852891e-002, -3.362806e-003, -1.852891e-002, 1.218811e-001, -5.577833e-002, 7.365763e-002, 1.017000e-001, 3.444980e-002, 1.542426e-002, -5.041625e-002, 1.542426e-002, 4.097251e-002, 1.615666e-001, 3.424683e-002, -2.749270e-002, -2.203347e-002, -5.887891e-003, -8.204677e-003, -5.887891e-003, -1.733068e-001, 3.192598e-002, -9.062600e-002, -3.950896e-002, -1.352989e-002, 2.362309e-002, -6.753156e-002, 2.362309e-002, 3.793631e-002, 2.352159e-001, -7.240006e-002, -3.399364e-002, 7.031335e-003, 1.289684e-002, -4.840886e-002, 1.289684e-002, 1.310821e-001, 2.066338e-001, -4.700073e-002, -4.604049e-002, -3.112508e-002, 1.397710e-002, 2.229714e-002, 1.397710e-002, 8.618120e-003, -4.849134e-002, 5.290775e-002, -1.565410e-001, 1.393094e-002, 3.866623e-002, -6.393645e-002, 3.866623e-002, -7.736028e-002, 5.704461e-002, -1.212161e-002, 1.467051e-001,


© ISO/IEC 2004 — All rights reserved

Copyright International Organization for Standardization
Provided by IHS under license with ISO
No reproduction or networking permitted without license from IHS
Not for Resale

1.343843e-002, 3.948207e-002, -1.282508e-001, 3.948207e-002, 8.022829e-002, -5.074381e-002, 8.001752e-002, 1.804273e-003, -1.092963e-002, -1.130442e-002, -8.331747e-003, -1.130442e-002, -4.023370e-002, -1.680357e-001, 5.705950e-002, -1.048577e-002},
{4.465141e-004, -1.137580e-003, -2.337880e-003, 6.161615e-004, -1.961755e-003, -3.016913e-003, 1.044390e-002, 3.363881e-003, -4.791480e-003, 3.363881e-003, 1.044390e-002, -3.016913e-003, -1.961755e-003, 6.161615e-004, -2.337880e-003, -1.137580e-003, 1.015907e-002, -4.396361e-003, -4.052307e-003, 2.609342e-004, 3.219180e-003, -5.990956e-003, -8.074459e-003, -2.842137e-003, -3.076254e-002, 1.280317e-002, 2.533360e-002, -1.610948e-002, -9.268366e-003, 1.042883e-002, 9.409017e-003, 8.279428e-003, -4.587766e-003, -1.444013e-002, 3.777306e-003, 1.786521e-002, 5.497267e-003, -2.681618e-002, 2.677851e-003, 6.360906e-003, -4.328416e-003, -9.862258e-004, -2.066205e-002, 2.861705e-003, 1.609610e-002, 7.457924e-003, -1.209553e-003, -3.070465e-002, -7.905499e-003, 1.257466e-002, -5.669158e-003, 1.294373e-002, 2.004197e-005, 1.153075e-002, -1.269036e-002, -1.406862e-002, 3.063155e-002, 1.414098e-002, -1.238777e-002, -3.650189e-003, 1.651922e-002, 2.207191e-002, 8.120971e-003, -2.733565e-003, -5.073192e-003, -3.793146e-002, -1.042713e-003, 2.035499e-002, 4.584079e-002, 8.621906e-003, 8.748128e-003, -3.483149e-002, 2.465829e-004, 2.806122e-002, 2.622864e-002, -8.276557e-003, 6.813639e-002, 1.022985e-002, 5.160698e-003, 4.281734e-004, 1.628913e-002, 2.503700e-002, 8.259938e-003, 1.580818e-002, -7.166277e-003, 4.759724e-003, 9.465573e-003, -3.094822e-002, -1.020433e-002, -1.528236e-002, 4.325369e-002, -6.902413e-003, 1.906177e-002, 2.641181e-002, 2.679445e-002, -5.977015e-003, 2.968376e-002, -1.110399e-002, 2.110617e-002, -6.507428e-003, -6.657765e-003, -3.347073e-002, -3.683911e-003, 9.574906e-003, -3.410874e-002, -7.720804e-003, 6.365067e-002, 2.250297e-002, -1.007880e-002, -4.324747e-003, 1.191821e-002, -1.281080e-002, 1.205891e-002, -1.534887e-002, 1.373208e-003, 1.024580e-002, 1.967648e-002, -1.393559e-002, -3.768333e-003, -4.445931e-002, -1.267294e-002, 4.055576e-002, -2.615532e-002, 3.758943e-003, -3.063784e-002, -1.439242e-002, 1.751542e-002, 1.329535e-003, 9.134278e-003, 6.951665e-003, -7.635830e-004, -1.545408e-002, 1.869373e-002, -1.545408e-002, -7.635830e-004, 6.951665e-003, 3.191157e-002, 4.614975e-002, -5.088138e-002, -2.187028e-003, -1.008068e-001, 4.369096e-002, -4.049032e-002, 2.441177e-002, -4.751241e-002, 1.196128e-002, -9.292493e-002, 6.213289e-003, 1.616395e-002, 2.633149e-002, -4.765066e-002, 3.642339e-003, -1.570693e-002, 9.276088e-002, -2.054014e-003, 6.036745e-002, -1.148827e-001, 9.673283e-002, 8.766032e-002, 4.461872e-002, -6.861419e-003, 8.917762e-003, -9.333928e-003, -2.192910e-002, -4.449411e-003, -2.192910e-002, -9.333928e-003, 8.917762e-003, -2.229857e-002, 2.068150e-002, -4.027799e-002, 3.199175e-002, -2.390600e-002, -3.203881e-002, 5.065508e-003, 5.932821e-002, 4.520648e-002, -1.159262e-002, -1.234390e-001, 8.036018e-002, -3.404616e-002, 4.032510e-002, -3.958331e-002, 4.756409e-002, -7.233165e-002, -3.824636e-002, 9.521483e-002, 1.002749e-002, -5.202486e-002, 2.891321e-002, -1.461780e-002, -6.788237e-002, -3.635496e-003, -1.872413e-003, -1.105296e-002, -4.602996e-003, 6.545914e-003, -4.602996e-003, -1.105296e-002, -1.872413e-003, -7.674349e-003, -1.007691e-002, -3.998745e-002, 2.027269e-002, 5.341814e-002, -5.422182e-002, 2.617953e-002, -1.833758e-002, -1.870402e-002, 1.257953e-003, -4.899603e-002, -1.171884e-001, -5.004027e-002, -1.749644e-002, -3.835914e-002, -4.243287e-002, 5.748227e-003, 4.090467e-003, 2.620131e-003, -2.827082e-002, 3.048471e-002, -3.907677e-003, 4.173716e-002, -2.990061e-002, 1.809151e-003, 1.260054e-003, 1.394658e-002, -1.110749e-002, -3.809776e-003, -1.110749e-002, 1.394658e-002, 1.260054e-003, -1.310225e-003, -5.563298e-002, -4.052324e-002, 4.099739e-002, -9.038037e-002, 1.745996e-002, -1.206000e-002, 1.255564e-003, -4.891410e-002, -1.777786e-002, 2.108523e-002, -8.236013e-002, 3.856556e-002, 8.844434e-002, -2.547106e-002, 5.720991e-002, 4.028771e-002, 5.088629e-002, 2.933720e-002, 2.332348e-002, -1.002736e-001, -1.255450e-003, 3.871168e-002, 9.914227e-003, -7.632266e-003, 2.033263e-002, -1.827956e-002, 2.033263e-002, -3.652255e-002, -1.580012e-002, -2.291613e-001, 9.040756e-002, -1.826308e-002, 1.466600e-002, -2.534545e-001, 1.466600e-002, 1.018478e-001, -1.828891e-001, -3.340918e-002, 1.621727e-001, 1.273202e-002, -3.885722e-002, -1.133975e-001, -3.885722e-002, 1.377924e-002, -9.105379e-002, 3.621630e-002, 2.042549e-001, 1.605917e-002, 2.839509e-002, -8.819936e-003, 2.839509e-002, -1.048565e-001, -7.296933e-002, 1.285947e-001, -6.644646e-002, -1.264833e-002, -1.818447e-002, 1.313962e-003, -1.818447e-002, -4.552064e-002, 2.427455e-002, 3.093345e-002, 4.567159e-002, 4.767796e-002, 1.130581e-004, -6.006413e-002, 1.130581e-004, -3.058569e-002, -1.808101e-002, 5.101925e-002, -1.244051e-001, -3.030930e-002, 1.770535e-002, 6.179415e-002, 1.770535e-002, 3.983196e-002, -7.933863e-002, -1.358792e-001, -1.007558e-001, -5.343306e-003, 1.232052e-002, 2.208326e-003, 1.232052e-002, -2.002718e-002, -7.364085e-002, -8.116961e-002, -7.581812e-002, -2.427702e-002, 1.902127e-002, 6.323776e-003, 1.902127e-002, 2.718689e-004, -7.465999e-002, 1.032079e-001, 8.599932e-002, 1.056944e-002, 1.654075e-002, 3.173346e-002, 1.654075e-002, 5.351445e-002, -6.412883e-002, -1.540490e-001, -1.493862e-001, 1.846850e-002, 3.854753e-002, 3.484145e-003, 3.854753e-002, -1.534998e-003, 4.218442e-002, -2.123486e-001, -1.352183e-001, -1.656285e-002, -1.098345e-002, 7.998257e-003, -1.098345e-002, 1.872281e-001, -1.645173e-001, 3.656073e-002, -1.287255e-003, 2.985245e-002, 1.500753e-002, -1.627471e-003, 1.500753e-002, 8.858757e-002, 1.015319e-001, -6.803555e-004, -6.905116e-002, -1.978036e-002, -1.267945e-002, 5.788049e-003, -1.267945e-002, 2.559334e-002, 8.628281e-002, 1.594758e-001, 4.924181e-002, -

© ISO/IEC 2004 — All rights reserved


Copyright International Organization for Standardization
Provided by IHS under license with ISO
No reproduction or networking permitted without license from IHS
Not for Resale

1.775723e-002, 2.942003e-003, 3.569144e-002, 2.942003e-003, -1.106565e-004, -1.088971e-001, 6.075197e-003, -4.363945e-002,
1.766073e-002, 2.078929e-003, -2.883954e-002, 2.078929e-003, 1.330431e-001, 4.244586e-003, -1.050036e-001, 4.959930e-002},
{5.653324e-004, -2.544728e-003, 7.073690e-003, 2.035784e-003, -4.261266e-003, -2.741220e-003, 1.130355e-003, -4.850251e-003,
1.202468e-002, -4.850251e-003, 1.130355e-003, -2.741220e-003, -4.261266e-003, 2.035784e-003, 7.073690e-003, -2.544728e-003,
1.620639e-003, 1.590953e-002, 2.105271e-002, 1.053205e-002, 5.331972e-003, -8.539673e-005, -1.093729e-006, -2.205688e-002,
2.562712e-003, 7.349366e-003, 1.452295e-002, -2.158417e-002, 3.314739e-003, 5.976106e-004, 2.137620e-002, 1.100412e-003,
3.339595e-002, -1.640504e-002, -2.276386e-002, 5.571319e-003, -1.907720e-002, 1.634373e-002, -5.554840e-003, 1.459674e-002,
4.173270e-003, 2.307867e-003, -1.361491e-002, -1.337337e-002, 1.980278e-002, -2.459024e-003, 1.627287e-002, -8.396868e-003, -
6.377131e-003, -1.960676e-002, 1.895996e-002, -4.617873e-004, -2.021018e-002, 1.573069e-002, -4.111350e-002, 7.217497e-003, -
1.772934e-002, -1.980734e-002, 4.904993e-003, 1.821714e-002, 3.234082e-002, 6.223673e-003, 3.735479e-003, -1.496378e-002, -
8.856602e-003, -1.960706e-002, -2.050962e-002, -2.796872e-002, -3.852073e-003, -5.161805e-003, -8.420176e-003, -1.037541e-002, -
9.969395e-003, 5.677972e-003, 4.114241e-004, 8.234734e-004, -2.243763e-002, 1.801322e-003, 6.956669e-003, 7.448834e-003, -
1.115600e-002, 6.780791e-003, -8.361604e-003, -7.111522e-003, 4.705322e-003, 1.389830e-002, -9.223529e-003, 3.174750e-002, -
2.175661e-002, -1.680722e-002, 3.851737e-002, 1.328408e-002, 1.798823e-002, 7.658439e-003, 1.738164e-002, -2.231891e-002, -
6.307986e-003, -8.217209e-003, 8.284135e-003, -1.418106e-002, -2.200323e-005, -4.081443e-002, 1.254410e-002, 1.636026e-002, -
1.009456e-002, -2.046542e-002, 2.864514e-002, -3.105902e-002, -3.745422e-002, -4.121898e-002, 7.952091e-003, -1.277412e-002, -
3.878279e-002, 4.926310e-003, 8.295778e-003, -9.806010e-004, -4.608465e-002, 1.323656e-002, -3.272828e-002, 4.276775e-002, -
4.653006e-002, -5.421682e-002, -6.768640e-002, -1.373585e-002, -5.365567e-002, -2.348216e-002, -2.028279e-002, -1.386916e-002,
2.525199e-003, -6.360646e-003, -2.077111e-003, 9.492841e-003, 4.197735e-004, 9.492841e-003, -2.077111e-003, -6.360646e-003, -
3.421877e-002, -1.445982e-003, 3.410595e-002, 2.755572e-003, -5.026504e-002, 2.731677e-002, 4.594906e-002, 1.194927e-002,
1.836955e-002, 3.290660e-002, 4.459816e-002, -4.324332e-002, -9.026517e-002, -1.638442e-002, -1.988223e-002, -3.451848e-002,
3.692986e-002, 4.571552e-003, -8.647123e-002, -5.334463e-002, 9.571347e-003, 7.548426e-002, 4.471046e-002, 4.103217e-002, -
4.338263e-003, -9.743378e-003, -9.308207e-003, -1.669320e-002, 5.429418e-002, -1.669320e-002, -9.308207e-003, -9.743378e-003, -
2.052237e-002, 3.408790e-003, 2.224926e-002, -6.770991e-002, 6.306545e-002, 3.788136e-002, -3.667447e-002, -6.603752e-003,
3.042067e-002, 6.743068e-002, -4.149491e-002, 5.530528e-002, 5.754693e-002, 3.268285e-003, -7.278162e-002, -6.260181e-003,
3.817194e-003, 4.943819e-002, -1.047137e-002, -2.975401e-002, -2.202323e-002, 8.269180e-002, -8.958599e-003, 4.527814e-002,
3.089447e-005, -5.647378e-003, 1.813226e-002, -2.169291e-002, 7.501105e-002, -2.169291e-002, 1.813226e-002, -5.647378e-003,
5.550181e-002, 4.729781e-002, 6.518322e-002, -6.181203e-002, 7.319830e-002, 1.786011e-003, -1.347675e-002, 3.901684e-003, -
4.359910e-003, 1.032890e-001, 5.264621e-002, 5.284036e-002, -1.845437e-002, -3.734767e-002, 8.236100e-002, 6.844781e-002,
2.975454e-002, -6.316695e-003, 3.481988e-002, -9.566194e-003, -7.540584e-002, 1.184792e-002, 2.219232e-002, -5.960837e-002,
2.347502e-003, 4.483327e-003, 6.141730e-003, 4.462219e-003, -2.279783e-002, 4.462219e-003, 6.141730e-003, 4.483327e-003,
3.040948e-002, -1.022942e-002, -5.283309e-002, 4.125657e-002, -4.999243e-002, 4.664510e-002, -4.389801e-002, -2.552166e-002, -
1.090991e-002, -4.441241e-003, 7.880121e-002, -4.260734e-002, 1.792706e-002, -3.962691e-002, 1.413229e-002, 7.273408e-002,
4.195192e-002, -2.940439e-003, 1.783064e-003, -9.988531e-002, 9.129455e-002, 1.366422e-002, 5.603216e-002, 3.657104e-002, -
9.300052e-003, -3.734676e-003, 3.922885e-002, -3.734676e-003, -7.538668e-002, 2.924218e-002, 1.009076e-001, -4.624674e-003, -
1.219471e-002, -6.083772e-002, 1.663347e-001, -6.083772e-002, 4.899774e-002, 1.183035e-003, -2.668627e-002, -2.292804e-001, -
1.953396e-002, 8.851198e-002, -1.282111e-001, 8.851198e-002, 9.183791e-003, 8.340041e-002, -7.410975e-002, -9.427890e-002,
8.953263e-003, 1.421088e-002, -1.520721e-002, 1.421088e-002, -2.733331e-002, 8.035990e-002, -5.726982e-002, -9.799475e-002, -
1.858631e-003, -1.951882e-003, -5.515242e-002, -1.951882e-003, -1.051990e-001, 7.791366e-002, 6.250555e-002, 4.086970e-002,
2.587859e-002, -5.083276e-002, 1.862248e-001, -5.083276e-002, 8.997166e-003, -7.294993e-002, -1.274237e-001, -4.252681e-002,
1.184801e-002, 2.186514e-002, 9.620824e-002, 2.186514e-002, 2.211982e-002, -5.733181e-002, -9.702432e-002, -1.355675e-001, -
5.605583e-003, 2.107222e-002, -9.703054e-002, 2.107222e-002, -1.821099e-002, 9.671281e-002, -9.529921e-002, 5.452029e-002,
1.738987e-002, 5.292417e-003, -5.292366e-002, 5.292417e-003, -2.092853e-001, 1.414885e-001, -2.602623e-002, 3.038388e-002, -
6.453986e-002, -2.085884e-002, -6.584133e-002, -2.085884e-002, -8.143535e-002, 1.324196e-001, 4.701708e-002, -9.037292e-002, -
4.213484e-002, -1.837424e-002, -6.712936e-003, -1.837424e-002, -5.064378e-002, 3.722718e-002, 2.722663e-001, 1.094874e-001, -
5.213455e-002, 9.820264e-003, 3.287830e-002, 9.820264e-003, -9.651402e-002, -3.374767e-002, -5.369448e-002, -1.291494e-002,
2.389004e-003, -2.295755e-002, -7.611784e-002, -2.295755e-002, -5.210424e-002, -1.377820e-002, -2.048472e-002, -8.737855e-002,
4.479189e-002, 1.946824e-002, -4.250671e-002, 1.946824e-002, -4.829240e-002, -9.698643e-002, -6.488457e-003, -1.514296e-001,


© ISO/IEC 2004 — All rights reserved

--`,,```,,,,````-`-`,,`,,`,`,,`---

Copyright International Organization for Standardization
Provided by IHS under license with ISO
No reproduction or networking permitted without license from IHS
Not for Resale

3.481028e-002, 3.121179e-002, -8.437313e-002, 3.121179e-002, -7.265175e-002, -1.603365e-001, 1.091865e-001, 4.326753e-002, 6.180661e-002, -2.598827e-002, 7.254890e-002, -2.598827e-002, -1.334193e-001, 1.269035e-001, -8.844849e-002, 4.683675e-002}, {1.094969e-004, -6.221507e-004, 2.048367e-003, -3.606021e-003, -4.524597e-003, 5.552358e-004, 9.553309e-003, 5.467368e-003, -1.518482e-002, 5.467368e-003, 9.553309e-003, 5.552358e-004, -4.524597e-003, -3.606021e-003, 2.048367e-003, -6.221507e-004, 6.183602e-003, -7.320338e-003, -6.124187e-003, 9.360400e-003, 7.598385e-003, -4.605970e-003, 8.964568e-003, 1.560591e-002, -2.291346e-002, 2.605600e-003, -1.266421e-002, -2.375719e-003, 7.775625e-003, 1.347993e-003, 4.324411e-003, 1.004881e-002, 1.865955e-002, -5.185803e-003, 3.862808e-003, -1.531615e-002, 3.086751e-003, 1.060058e-003, -2.330553e-002, -2.527321e-002, 1.090425e-002, 6.949816e-003, -2.442938e-003, 3.182533e-003, 4.818416e-003, -9.397520e-003, 1.544011e-002, -3.969837e-004, -3.901881e-003, 5.392951e-003, -1.582012e-002, 3.477477e-003, 4.203445e-003, 3.315155e-003, -1.327595e-002, 8.920131e-003, -1.053606e-002, 9.336569e-003, -4.256940e-002, -5.808765e-003, 3.734192e-002, 1.965643e-002, 2.232432e-003, -1.662005e-002, 4.839026e-003, 6.148238e-003, -1.522401e-002, 1.099174e-002, 6.907543e-004, 2.690183e-002, 1.369497e-002, 5.258687e-003, -4.323510e-002, 2.617853e-002, -5.152672e-003, 1.456059e-002, 4.525717e-002, 2.341980e-002, 3.296070e-002, -1.715583e-002, 1.368428e-002, 1.457371e-002, 4.970340e-003, -1.105359e-002, -4.328221e-002, -2.172181e-002, -2.346224e-002, 2.134885e-002, 4.034155e-002, -2.053622e-002, -1.491842e-002, -2.169856e-003, 8.440316e-003, 1.086279e-002, 3.278203e-002, -7.961892e-003, 1.079724e-002, 4.952287e-003, 2.038522e-003, -6.272934e-003, -1.757651e-002, -6.636912e-003, -1.402596e-002, -1.756881e-002, -6.334228e-004, 1.566834e-002, -3.218396e-002, 1.309668e-002, -1.681019e-002, -4.176817e-003, -1.221746e-002, -1.577977e-002, -7.432830e-003, 2.818254e-002, 2.947224e-003, -3.817853e-002, -3.205201e-002, 5.878562e-003, -1.665778e-002, -2.871742e-003, 1.168733e-002, -7.021654e-002, -5.696830e-002, -3.441246e-002, 2.327519e-002, -4.840502e-002, -1.753586e-002, 2.726648e-003, -7.174514e-004, -1.692157e-003, -4.346429e-003, -1.761304e-002, 4.237230e-005, -1.761304e-002, -4.346429e-003, -1.692157e-003, -3.116162e-002, -3.730225e-002, 2.492999e-002, 5.484139e-004, -6.036411e-002, -4.842963e-002, -3.378787e-002, -6.139608e-003, -1.537216e-002, 1.925018e-002, -1.010094e-001, 3.846650e-003, -3.142304e-002, 4.032076e-003, 2.004894e-002, -3.577169e-002, 2.232219e-002, -2.540995e-003, 8.057176e-002, -1.423834e-002, 1.267902e-002, -7.843908e-003, 3.110815e-002, -1.926062e-002, -1.121642e-003, -9.167686e-003, 1.603653e-002, -3.182143e-002, -5.989622e-003, -3.182143e-002, 1.603653e-002, -9.167686e-003, -1.669042e-002, 2.637661e-002, -3.094895e-002, 6.145708e-002, 4.451488e-002, 9.564287e-003, 3.862990e-002, -1.487693e-002, 8.565349e-003, 2.656984e-002, 8.417832e-002, -6.300696e-002, 1.899266e-002, 4.830910e-002, -6.615444e-002, -6.889983e-003, -6.389895e-002, 3.902752e-002, 5.196979e-003, -6.209657e-002, -3.648453e-002, 1.243518e-002, -4.305885e-003, -1.050216e-002, 5.845814e-004, -1.383070e-003, 1.891155e-002, 2.213934e-003, 1.330883e-002, 2.213934e-003, 1.891155e-002, -1.383070e-003, -4.363106e-003, 8.988736e-003, 1.190713e-002, -5.162770e-002, 2.280932e-002, -1.154667e-002, -2.739542e-002, 1.060283e-002, -1.362645e-002, -4.607530e-002, -4.357431e-002, 6.559759e-002, 8.127387e-003, 5.577689e-003, -5.804359e-002, -5.310246e-002, 2.895139e-002, 6.669605e-003, 1.635669e-002, 5.234358e-002, -6.962002e-002, 3.428403e-002, -1.229841e-001, -1.063218e-002, 1.364009e-003, 9.105550e-003, 1.409434e-002, -9.847458e-003, -9.917356e-005, -9.847458e-003, 1.409434e-002, 9.105550e-003, -1.509940e-002, 2.369778e-002, 3.696945e-002, -1.605809e-002, 3.745668e-003, -1.550133e-002, -3.045529e-002, -4.170054e-003, 1.456187e-002, 5.481916e-003, -5.816770e-002, -5.827730e-002, 1.256229e-001, 1.265200e-001, -4.972440e-002, -5.518888e-002, -2.841631e-002, -3.105741e-002, -8.535111e-003, -1.404960e-002, -1.130650e-001, 8.925524e-003, -1.836795e-002, -2.429904e-002, -2.290976e-003, -5.333803e-003, 8.737058e-002, -5.333803e-003, 2.304159e-002, 1.169198e-001, 8.625625e-002, 4.762031e-002, -3.871983e-003, 8.398968e-002, -1.526410e-002, 8.398968e-002, 3.216878e-002, -1.861014e-001, -1.548337e-002, -1.398818e-001, -1.702566e-002, 2.430429e-002, 1.847783e-001, 2.430429e-002, 2.205738e-002, -2.578273e-001, 1.054596e-002, 2.771542e-002, 2.609397e-002, 1.263312e-002, 3.206443e-002, 1.263312e-002, -4.269510e-002, -1.020816e-001, 6.809480e-002, 1.115540e-001, 8.244099e-005, -1.447055e-002, 2.322889e-002, -1.447055e-002, 9.268773e-003, 1.581831e-001, -1.656097e-002, -8.307480e-002, 5.363067e-003, 4.668753e-002, -5.700925e-002, 4.668753e-002, -6.826772e-002, 6.978124e-002, 1.052723e-001, -1.639815e-002, 7.413173e-003, 3.464384e-002, -1.726153e-001, 3.464384e-002, -4.458773e-002, 1.011390e-001, 7.651496e-002, -3.094481e-002, -1.760313e-002, -2.083677e-002, 9.307153e-002, -2.083677e-002, -1.052231e-002, -2.319140e-002, -2.708655e-002, -4.877635e-003, -6.419095e-003, 2.918080e-002, -7.288819e-002, 2.918080e-002, -2.918982e-002, 1.128767e-002, -5.658799e-002, 8.344573e-002, 1.788128e-002, 1.497216e-002, -5.717732e-002, 1.497216e-002, -6.912273e-002, 4.236437e-002, 1.301504e-001, 1.682002e-001, -1.658723e-002, 2.517940e-002, -1.122830e-001, 2.517940e-002, -1.889958e-002, 1.231619e-001, 2.172621e-002, 8.924081e-002, 2.631973e-003, -3.124716e-002, 2.205667e-002, -3.124716e-002, 8.926523e-002, 1.954386e-001, -9.290871e-002, -3.268120e-001, 8.093906e-003, -6.039735e-003, -8.922455e-003, -6.039735e-003, -1.326376e-003, 9.268230e-002, -1.529877e-002, 1.319602e-002, -1.897151e-002, 1.271610e-002, -1.978657e-002, 1.271610e-002, 4.710053e-002, 3.917193e-003, -6.289374e-003, 1.359737e-001,

© ISO/IEC 2004 — All rights reserved


Copyright International Organization for Standardization
Provided by IHS under license with ISO
No reproduction or networking permitted without license from IHS
Not for Resale

3.202835e-002, -1.639292e-002, -6.736323e-002, -1.639292e-002, -1.908564e-003, 8.734672e-002, -1.339428e-001, -3.239177e-002, -1.670908e-002, 3.926737e-003, -7.795921e-003, 3.926737e-003, 8.445135e-002, 1.285976e-001, 9.623235e-003, -2.141918e-001},
{-3.483437e-004, 1.527074e-004, 4.597291e-003, 3.159029e-003, -1.816265e-003, -1.429493e-002, 1.155953e-002, 2.352122e-003, 5.846494e-003, 2.352122e-003, 1.155953e-002, -1.429493e-002, -1.816265e-003, 3.159029e-003, 4.597291e-003, 1.527074e-004, 1.155672e-002, 1.600144e-002, 1.487561e-002, -3.480318e-003, -3.644785e-004, -2.238304e-002, 1.938027e-002, 4.537082e-002, 1.275241e-002, -1.951733e-003, -6.293433e-003, 1.189665e-002, 2.930325e-003, -1.521846e-002, -7.422318e-003, -2.363353e-003, 6.889911e-004, 4.143538e-003, -1.821973e-002, 3.934995e-003, -1.460367e-002, -4.384196e-002, 5.293091e-003, 1.287535e-002, 2.127306e-002, 4.112896e-003, 6.263497e-003, 2.209185e-002, -1.048511e-002, -1.304950e-002, 1.273563e-002, 9.534293e-003, -3.477219e-003, 1.230307e-002, 1.809606e-002, -2.374483e-002, -2.826311e-002, -1.103776e-002, -1.402016e-002, -3.743562e-002, 2.525890e-003, -8.040735e-003, -8.433044e-003, -1.189305e-003, -2.272789e-002, -9.285688e-003, -1.689349e-002, 1.824472e-002, 3.106398e-002, -1.342232e-002, 2.314945e-003, 1.549113e-002, 2.672250e-002, -6.082799e-003, -2.041688e-002, -3.700621e-003, 5.326437e-003, 3.535576e-002, 4.074952e-003, 4.652783e-003, -3.763379e-002, 1.005038e-002, 1.523827e-002, 1.232186e-002, 3.009786e-003, 1.731654e-002, 2.179970e-002, 4.907356e-002, 3.072258e-002, 1.676836e-002, -8.185510e-003, -5.212739e-003, -7.353137e-003, 5.437130e-003, -1.034893e-002, -5.007699e-003, 1.521486e-002, 2.089086e-002, 1.486770e-002, 3.515119e-002, -2.048798e-002, -7.656631e-003, -1.402837e-002, 1.716164e-002, -2.091802e-002, 1.340861e-002, -1.933682e-002, -1.622276e-003, -4.535548e-005, 4.929531e-002, 6.692799e-003, -3.859168e-002, 3.682874e-002, 9.362344e-003, 3.781755e-003, 3.064665e-002, 1.356124e-002, -2.046469e-002, -1.127459e-002, 8.585492e-003, 5.325754e-003, -2.048760e-002, -2.997644e-004, 8.432332e-003, -4.825170e-003, -1.729274e-002, -4.355406e-003, 3.922306e-002, -1.470267e-002, 5.021628e-003, 3.625272e-002, 1.325229e-002, -6.937097e-004, 8.975783e-004, 1.066879e-002, 2.779352e-003, -4.536277e-002, 2.779352e-003, 1.066879e-002, 8.975783e-004, -2.260800e-002, -2.735968e-002, -1.234193e-002, -1.587902e-003, -2.712867e-002, 9.424453e-003, 1.775907e-002, 9.970118e-003, -4.840433e-002, -5.784377e-003, -8.830600e-002, -9.948436e-003, -8.023463e-002, 6.552147e-002, 5.391896e-002, 1.565462e-002, 1.638803e-002, -5.559117e-002, -7.523464e-002, 1.612492e-002, -3.899510e-002, 3.570891e-002, -4.779765e-002, 2.103529e-002, 6.266366e-003, -5.640801e-003, 4.908948e-003, 7.163195e-003, -6.838630e-003, 7.163195e-003, 4.908948e-003, -5.640801e-003, -2.008754e-002, 3.733032e-002, 2.750192e-002, 1.323404e-002, 6.086732e-002, -4.612957e-003, 1.839173e-002, -3.056400e-002, -2.388709e-002, -7.511626e-002, -3.293489e-002, 5.984270e-002, 6.452938e-002, 2.078633e-002, 3.149902e-002, 1.143253e-002, -8.128781e-003, -1.225070e-001, -9.895646e-002, -2.864816e-002, 8.281043e-002, -5.466117e-002, -2.963536e-002, -5.254471e-002, -1.516415e-003, -2.386355e-003, -1.245384e-002, -1.348357e-002, 6.018493e-003, -1.348357e-002, -1.245384e-002, -2.386355e-003, -3.106332e-002, 1.329470e-002, -2.167195e-002, 4.493541e-002, -2.049453e-002, -2.144026e-002, 1.092644e-002, -3.987077e-002, -3.496189e-002, -7.631421e-003, -2.578034e-002, 4.243281e-002, -8.985648e-002, -6.713160e-003, -8.815880e-003, -5.683724e-002, 2.713890e-002, 5.812662e-002, 4.450429e-003, 1.063638e-002, -9.668879e-002, -8.398926e-002, 2.552730e-002, -7.190961e-002, -4.404585e-003, -8.958998e-003, -2.210246e-003, -6.886435e-003, 3.789414e-002, -6.886435e-003, -2.210246e-003, -8.958998e-003, 2.955031e-002, -3.473384e-002, 3.458560e-002, 7.353075e-003, -3.621272e-002, 2.488634e-002, 1.938680e-002, -2.772452e-003, -1.864635e-002, 1.100533e-002, -1.947761e-002, -4.544373e-002, 3.166188e-002, -2.532286e-002, -6.051566e-004, -1.018190e-002, 1.050206e-002, 3.952990e-002, -9.405588e-002, 5.136757e-003, 1.017414e-003, -5.998626e-002, -4.737518e-002, 1.788754e-002, 2.283164e-002, -1.502713e-002, 7.048657e-002, -1.502713e-002, -3.047110e-002, 1.333240e-001, -8.787334e-002, -6.870452e-004, -2.271263e-002, 2.208142e-002, -1.141833e-001, 2.208142e-002, 5.070778e-002, 9.658802e-002, -2.114928e-002, -1.426928e-001, -5.039564e-003, 1.111940e-001, -2.007696e-001, 1.111940e-001, -6.520016e-002, -1.792036e-001, 2.981430e-002, 2.007952e-001, 2.943591e-002, 1.528039e-002, -1.708889e-002, 1.528039e-002, 4.105257e-002, 6.071066e-002, -1.407577e-001, 3.846788e-002, 7.839017e-003, 1.066871e-002, -2.693499e-003, 1.066871e-002, 7.248632e-002, 1.597706e-001, 3.787108e-002, 1.940854e-002, -8.651732e-003, 2.024704e-002, 3.514289e-002, 2.024704e-002, 3.742713e-002, 2.123169e-001, -1.415754e-001, -2.742183e-002, 8.962024e-003, -4.845637e-002, -2.362639e-002, -4.845637e-002, -2.239119e-002, 1.091802e-001, 1.029744e-001, 1.424081e-001, -2.709200e-002, 1.587396e-002, -1.058930e-001, 1.587396e-002, 7.108054e-002, 2.548446e-002, -2.330271e-002, 9.571243e-002, -2.043889e-002, -4.727621e-003, -6.350543e-003, -4.727621e-003, -7.060846e-002, 9.101945e-002, 1.947491e-001, 5.145339e-002, 3.312830e-003, -5.738996e-003, -5.208114e-002, -5.738996e-003, 2.987216e-002, 6.304575e-002, -1.329637e-001, 1.461355e-001, 2.642663e-003, -2.608857e-002, -1.045349e-001, -2.608857e-002, 9.949313e-003, -2.048966e-001, -5.060227e-002, -7.724645e-002, 8.261634e-003, -7.497922e-003, 7.406073e-003, -7.497922e-003, -2.329652e-004, 1.177761e-001, -4.782449e-002, -1.125263e-001, -1.204953e-002, 1.764872e-002, -4.502196e-002, 1.764872e-002, 1.433079e-001, 2.681066e-002, 1.464726e-001, 1.141406e-002, 2.765918e-002, -3.429485e-002, 5.295392e-002, -3.429485e-002, -4.857826e-002, 6.509871e-002, -1.400510e-001, -3.986515e-003, -


© ISO/IEC 2004 — All rights reserved
--`,,```,,,,````-`-`,,`,,`,`,,`---

Copyright International Organization for Standardization
Provided by IHS under license with ISO
No reproduction or networking permitted without license from IHS
Not for Resale

9.216145e-003, 4.461829e-004, -4.889054e-002, 4.461829e-004, -8.183912e-002, 5.140250e-002, 3.067990e-002, -5.975312e-002, -6.092736e-003, 2.126714e-003, -3.979814e-002, 2.126714e-003, -6.492483e-002, -8.762810e-003, -8.317545e-002, 2.136136e-001},
{-4.643315e-004, 2.914544e-003, -1.258109e-002, -4.394647e-003, 2.687118e-003, 5.589003e-003, 9.003585e-003, -5.180540e-004, -1.518497e-002, -5.180540e-004, 9.003585e-003, 5.589003e-003, 2.687118e-003, -4.394647e-003, -1.258109e-002, 2.914544e-003, 9.369503e-004, -4.273565e-004, -6.208123e-003, -7.980419e-003, 5.102471e-003, 1.758393e-002, 5.478658e-003, -6.577909e-004, 1.757091e-002, -3.310235e-004, 1.791479e-002, 1.620336e-002, -8.503386e-003, -6.950708e-003, -2.251043e-002, 6.163097e-003, -2.525865e-003, -3.203889e-003, -2.527022e-002, -1.484666e-002, -2.820761e-002, -1.850016e-002, 2.464190e-003, -4.706334e-002, 5.053962e-003, -1.676100e-002, 6.173141e-003, 1.088873e-002, -1.622757e-002, 7.039737e-003, 1.181189e-002, -7.539215e-004, -4.738521e-003, 5.299114e-003, 4.039430e-003, -4.239201e-002, -2.693280e-002, -2.924909e-002, 9.263931e-003, 1.178704e-002, -2.431305e-003, -2.265341e-002, -1.970226e-002, -6.459441e-003, -1.355488e-002, 1.550489e-003, -3.505579e-003, -2.053237e-002, -2.690860e-002, -3.069439e-002, -2.367168e-002, -2.562035e-002, 3.591005e-004, 3.285180e-002, 7.322186e-003, -4.858257e-002, -3.818603e-002, -2.327929e-002, -1.145519e-002, -1.212148e-002, -3.462054e-002, -3.714425e-002, -4.275470e-002, 1.453627e-002, 1.471876e-002, -1.039203e-002, -2.623864e-002, -2.842444e-002, -2.100532e-003, -2.345980e-002, -1.723514e-003, 1.720252e-003, -3.311046e-002, 2.219904e-002, -2.873204e-002, 1.892581e-003, 1.424369e-002, -4.381869e-002, 1.029759e-003, 1.695951e-002, 1.270132e-002, 1.285166e-002, 1.239124e-002, -3.302462e-003, -7.412490e-002, 7.870882e-003, 1.304378e-003, 3.332545e-003, 1.112845e-002, -3.230974e-002, -4.938450e-003, -1.248520e-003, 6.348033e-003, 2.208044e-002, 9.642038e-004, 1.660976e-002, 7.436653e-003, 1.935374e-002, 1.041240e-002, -1.091244e-002, 5.269044e-002, 3.827092e-002, 3.532006e-002, 4.033658e-002, 7.078577e-002, -6.855871e-003, 1.962861e-002, -7.969141e-003, 6.652683e-002, -3.166046e-002, 1.068703e-002, -1.101593e-002, -1.234964e-002, 9.887200e-003, -6.778826e-003, 9.552889e-003, -2.587620e-002, 9.552889e-003, -6.778826e-003, 9.887200e-003, 2.534423e-003, 5.741975e-002, 1.417370e-002, -4.170265e-003, -3.836143e-002, 3.910458e-002, 3.890803e-002, -1.183048e-002, -3.607986e-002, 5.180824e-002, -6.197113e-002, -5.878632e-002, 1.463619e-002, 1.260286e-002, 7.292890e-002, -6.323245e-002, -5.037990e-002, 4.531731e-002, -2.036146e-002, -3.232199e-002, 1.167628e-001, 1.040990e-001, 9.199251e-002, -5.204380e-002, 1.052054e-002, 5.320795e-003, 1.164940e-003, -3.623788e-002, 7.370025e-002, -3.623788e-002, 1.164940e-003, 5.320795e-003, -1.405590e-002, 5.372790e-002, 1.571919e-002, -2.574521e-003, -3.132838e-003, -2.869862e-002, 5.752546e-002, -2.988193e-002, 9.159800e-002, 2.780269e-002, 7.362100e-003, -3.772066e-002, -5.670796e-002, 2.761362e-002, 9.630538e-003, 4.432998e-002, 2.553766e-002, 8.106242e-002, 1.857902e-001, 3.609603e-002, 3.246674e-003, -5.544825e-003, -5.930246e-002, -6.994891e-004, 3.445265e-003, 1.187586e-002, 3.527952e-003, -8.325396e-003, 2.346400e-002, -8.325396e-003, 3.527952e-003, 1.187586e-002, 8.675218e-002, 3.830362e-002, 3.191780e-002, 3.793622e-002, 8.048322e-003, 6.324724e-004, -2.142872e-002, 1.309579e-002, -3.942119e-002, 4.463199e-003, -5.651078e-002, -2.239086e-002, 1.711563e-002, -1.450931e-002, 8.425955e-002, -2.785831e-002, 1.151362e-002, -5.566551e-003, 4.694169e-002, 5.554626e-002, 4.036230e-002, 3.472382e-002, 1.740453e-002, -3.446669e-002, -2.080490e-003, 3.441838e-003, 1.956683e-002, -1.431112e-002, 2.647694e-002, -1.431112e-002, 1.956683e-002, 3.441838e-003, -2.432840e-002, 3.226883e-002, 8.577148e-003, 4.405559e-002, -8.258883e-002, 3.690648e-002, 1.456839e-002, -1.370145e-002, 2.393316e-002, 6.488526e-002, 2.730676e-002, 8.901801e-002, -2.213506e-003, -5.496522e-002, 2.750446e-002, 7.048309e-002, -6.762609e-003, -3.337442e-002, -7.917428e-002, -1.443387e-003, 4.232568e-002, -2.298045e-002, -3.534999e-003, 2.820548e-002, -1.208983e-002, -3.248504e-002, 7.545752e-002, -3.248504e-002, -6.927207e-003, 9.028924e-002, -7.308993e-003, -1.821180e-001, 2.537125e-002, 4.116528e-002, -2.225851e-001, 4.116528e-002, -4.211106e-003, -2.326332e-002, 1.667361e-002, 1.694177e-001, -4.902032e-002, -6.661071e-002, 2.602942e-001, -6.661071e-002, 7.634946e-002, -1.193327e-001, 6.499475e-002, 3.688457e-002, 5.688367e-002, 9.396695e-003, -3.837454e-002, 9.396695e-003, -8.249583e-002, 6.046154e-002, 1.631916e-001, 4.784112e-003, 1.945220e-002, 4.098152e-003, 4.789838e-002, 4.098152e-003, 1.374247e-001, -4.546829e-002, -7.524434e-002, 1.210193e-001, -4.508327e-002, 3.376743e-002, 1.954666e-001, 3.376743e-002, 4.158095e-002, 6.191507e-002, -4.628733e-002, 8.345846e-002, 4.035680e-002, -3.272477e-002, -6.663708e-002, -3.272477e-002, -1.315743e-001, 6.922902e-002, 9.229505e-002, -7.559965e-002, -3.769961e-002, 2.201371e-002, -1.023432e-002, 2.201371e-002, -1.580810e-001, 4.899685e-003, 4.834343e-002, -6.202732e-003, 1.275492e-002, -1.021081e-002, -6.062051e-003, -1.021081e-002, 4.400077e-002, 1.325836e-001, -9.537291e-002, 5.139167e-002, -4.898548e-002, -5.503179e-002, 1.342695e-001, -5.503179e-002, 5.880225e-002, -1.538021e-002, -6.464825e-002, -9.709530e-002, 2.384674e-002, -1.557611e-003, -1.467637e-002, -1.557611e-003, -1.753676e-002, -1.910835e-001, -4.687402e-002, 2.943626e-002, 4.464947e-003, -2.643095e-002, 4.470309e-002, -2.643095e-002, -3.231881e-002, -5.426692e-002, 2.144225e-003, -1.164558e-002, -5.985118e-003, -2.713658e-003, -2.941852e-002, -2.713658e-003, -1.054279e-001, 9.987859e-002, 1.440870e-001, -1.424152e-001, 4.566095e-002, 8.109329e-003, -2.197047e-002, 8.109329e-003, 1.110233e-001, 6.207859e-003, 7.253312e-002, -2.525280e-002,

© ISO/IEC 2004 — All rights reserved


Copyright International Organization for Standardization
Provided by IHS under license with ISO
No reproduction or networking permitted without license from IHS
Not for Resale

1.518149e-003, -4.894396e-002, -2.725890e-003, -4.894396e-002, -9.536140e-002, 6.739893e-002, -7.098795e-002, 4.627664e-002, -3.191033e-002, -4.187535e-003, 2.828307e-002, -4.187535e-003, -3.575331e-002, -8.269223e-002, 7.167031e-002, -2.454394e-002},
{4.141952e-005, -1.098255e-003, -4.648822e-003, 5.170984e-003, -6.843647e-003, -5.145375e-003, 1.811199e-002, 3.153741e-004, -4.874609e-003, 3.153741e-004, 1.811199e-002, -5.145375e-003, -6.843647e-003, 5.170984e-003, -4.648822e-003, -1.098255e-003, 5.128091e-003, 3.640677e-003, 4.613089e-003, -7.085559e-003, -4.344289e-003, -1.390757e-003, -5.227164e-003, -8.136764e-003, 1.790826e-002, -1.538882e-002, -4.414033e-003, -1.941501e-002, -3.310048e-003, 2.881967e-003, -1.783882e-002, -2.072860e-002, 1.886707e-003, -3.327625e-003, -1.098794e-002, -3.010153e-003, -3.110899e-002, 5.175288e-004, -5.022601e-002, 1.850929e-003, -1.742100e-003, -2.752793e-002, -1.586360e-002, 2.653341e-003, -1.742930e-002, -6.892570e-003, -1.873712e-002, -4.069258e-003, -1.087359e-003, 2.069335e-002, 2.047407e-002, 5.113208e-003, 1.175970e-002, 2.219672e-002, 6.110853e-004, 1.226008e-002, 3.094923e-003, 2.740660e-002, 1.527915e-002, 6.707153e-003, -1.759717e-002, 1.998942e-002, 1.876794e-002, -9.787282e-003, -1.280687e-002, -7.210026e-003, 5.704306e-003, -1.273226e-002, 1.498104e-002, -3.167797e-002, 3.453330e-003, -2.491509e-002, -5.641600e-003, 1.675072e-004, -9.422259e-004, 1.909224e-003, -2.098159e-002, -1.875814e-002, 1.315132e-002, 9.194226e-003, -1.955111e-003, -1.545888e-003, 1.110672e-002, -9.012080e-003, -1.666075e-002, 2.749688e-004, -4.439606e-003, -2.724594e-002, -2.292981e-002, 2.184628e-002, -1.153390e-002, -4.372163e-002, -2.498404e-002, -3.231124e-002, -3.658880e-002, -3.039323e-003, -2.844649e-002, -1.931237e-002, -9.568969e-003, 2.277589e-002, -6.349256e-002, -1.454330e-002, -3.204503e-002, 2.052525e-003, -2.160820e-002, -3.121626e-003, 1.639671e-002, -1.233427e-002, -3.357836e-002, -3.235390e-002, -4.134376e-002, -2.697181e-002, 1.173160e-002, 5.011373e-003, 3.612584e-002, -1.589133e-002, 2.004636e-002, 1.116996e-002, -2.905615e-002, 3.102251e-002, 7.524675e-003, -1.725785e-002, 1.323963e-002, -2.006337e-002, -4.675605e-002, -2.544902e-002, 3.417910e-003, -1.410613e-002, -1.698408e-003, 6.292872e-003, 7.192085e-003, -1.289333e-002, -1.687313e-002, -1.289333e-002, 7.192085e-003, 6.292872e-003, -4.653746e-002, -1.274954e-002, 6.126387e-003, -2.073423e-002, -3.069297e-002, 2.251320e-002, 2.644887e-002, 4.179566e-002, -2.745906e-002, -1.207426e-002, 1.682726e-002, 3.637701e-002, 6.368562e-002, 1.412931e-002, 5.346268e-002, 2.136138e-002, -1.180745e-002, -9.123635e-003, -4.293116e-002, 6.696834e-002, 4.054206e-002, 9.488194e-002, 2.790418e-002, 3.170116e-002, -1.401564e-004, 3.864470e-003, 7.612693e-003, -2.045135e-002, -1.603086e-003, -2.045135e-002, 7.612693e-003, 3.864470e-003, 2.277288e-002, 3.269938e-002, 6.198784e-003, -1.028711e-002, -3.944088e-003, -4.630290e-002, 3.338043e-002, 6.224949e-002, 4.552699e-003, 2.060161e-002, 2.674842e-003, 7.891677e-002, -9.096504e-002, 8.598544e-003, 1.440865e-002, -6.966087e-002, 5.658393e-003, -2.859711e-002, 7.074082e-002, 5.244822e-002, 3.530665e-002, -8.998854e-002, 7.415969e-002, -3.575323e-002, -1.086361e-005, 8.700079e-003, 1.265829e-002, -2.035258e-002, 1.853856e-002, -2.035258e-002, 1.265829e-002, 8.700079e-003, -1.620861e-002, 1.748325e-002, 2.443448e-003, 1.706219e-002, 8.733898e-002, 2.224926e-002, 2.055086e-002, 2.062556e-002, 1.084154e-001, -5.399781e-002, 2.590182e-002, 7.533178e-002, 4.941571e-002, 1.428131e-002, -3.612637e-003, 1.776734e-002, 4.760751e-002, -3.158382e-002, -2.324987e-002, 7.346911e-002, 9.576529e-002, -8.400181e-002, 1.163230e-002, -2.480425e-002, 1.890847e-003, 1.229711e-002, 1.147985e-002, -1.880890e-002, -2.434391e-002, -1.880890e-002, 1.147985e-002, 1.229711e-002, -2.995194e-002, -1.073706e-003, -6.802414e-003, -3.193782e-002, 1.025398e-002, -1.032782e-002, -5.723853e-003, 5.356218e-002, -5.621887e-002, -1.248489e-002, -1.544196e-002, -1.067811e-003, -3.460774e-002, 7.609488e-002, 1.549782e-002, -4.021700e-002, 3.441955e-003, -1.935722e-002, 8.706839e-002, 3.287768e-002, 2.744908e-002, 5.497369e-002, -2.665668e-002, 1.319708e-002, -1.068246e-002, -2.360478e-002, 2.173061e-002, -2.360478e-002, 9.637525e-002, 1.187977e-001, -3.039426e-004, -7.676332e-002, 1.571235e-002, 1.302675e-002, -2.025273e-001, 1.302675e-002, 4.368706e-002, 3.566374e-002, -3.677962e-002, 1.555796e-001, -1.002737e-002, -1.375417e-002, 1.484667e-001, -1.375417e-002, 6.892136e-002, 5.746849e-002, 1.610321e-002, -1.264055e-001, 8.594385e-003, -7.049845e-003, -2.319291e-002, -7.049845e-003, -8.082742e-002, -1.140222e-001, 3.250092e-004, 1.544596e-001, 9.004033e-003, -1.126175e-002, 1.024404e-003, -1.126175e-002, 6.070099e-002, 8.971010e-004, -6.942016e-004, 3.232287e-002, -1.573233e-002, -3.759015e-002, 1.384863e-002, -3.759015e-002, 1.161056e-001, -5.668444e-002, -9.231892e-002, 1.632655e-002, 2.818832e-002, -1.725273e-002, 4.304047e-003, -1.725273e-002, -9.279108e-002, 7.453128e-002, -1.338673e-001, -8.499628e-003, -2.689549e-002, 1.565619e-002, 9.862919e-003, 1.565619e-002, -6.032813e-002, 1.396152e-001, -3.214778e-002, 1.213142e-001, 4.665492e-003, -1.698234e-002, -8.029010e-003, -1.698234e-002, -1.857272e-002, -8.590786e-002, 7.024545e-002, 3.745201e-002, -2.857640e-003, 7.430842e-003, -7.139806e-002, 7.430842e-003, 8.810871e-002, -1.011987e-001, 2.230472e-002, 2.799799e-002, -3.456637e-002, -1.096365e-002, 3.550096e-002, -1.096365e-002, 1.536133e-001, -1.986243e-001, 5.734795e-002, -1.735703e-002, 2.034455e-002, -1.618861e-002, 3.132921e-002, -1.618861e-002, 1.179834e-001, -1.021859e-001, 3.049871e-002, 2.692941e-002, 1.042241e-002, 2.405000e-002, -8.004060e-002, 2.405000e-002, 3.633611e-002, -6.667105e-002, -2.426232e-002, 2.483679e-002, -1.224112e-002, -5.736179e-003, 1.394248e-001, -5.736179e-003, -7.704140e-002, 5.392596e-002, -6.221763e-002, -1.628591e-001,


© ISO/IEC 2004 — All rights reserved

Copyright International Organization for Standardization
Provided by IHS under license with ISO
No reproduction or networking permitted without license from IHS
Not for Resale

1.727787e-002, -2.537716e-002, 1.840505e-001, -2.537716e-002, 8.361988e-002, 8.146360e-002, -1.125899e-001, 2.179341e-002, -1.165209e-003, 1.220928e-002, -3.408244e-002, 1.220928e-002, 1.896989e-001, 2.048973e-002, -3.569069e-001, 1.825656e-001},
{-2.421711e-004, -1.866762e-003, 1.448531e-003, -8.089071e-004, -6.434782e-003, -4.704389e-005, 5.204911e-003, -6.619060e-003, 4.435936e-003, -6.619060e-003, 5.204911e-003, -4.704389e-005, -6.434782e-003, -8.089071e-004, 1.448531e-003, -1.866762e-003, -1.040300e-003, -1.457291e-003, -1.113896e-003, 4.923349e-003, 6.297202e-003, -1.796888e-004, 3.271090e-003, 9.538877e-004, -4.426892e-004, -5.151431e-003, -1.062375e-002, -3.671980e-003, -2.481363e-003, -3.769082e-004, -1.103665e-002, -1.636867e-003, -6.825025e-003, 2.217410e-003, -1.758502e-002, 3.383227e-003, -1.124119e-003, -6.639183e-003, -1.504136e-002, -2.248389e-002, -1.225887e-002, -5.463076e-003, 1.028700e-003, -1.456528e-003, 1.071203e-002, 2.437367e-002, -3.677571e-003, 1.472901e-002, -1.151507e-003, -1.082826e-003, 1.110867e-002, 1.571055e-002, 8.838584e-003, 1.316793e-003, 3.450236e-003, 1.301827e-003, -4.506548e-002, -1.983500e-002, 1.092237e-002, 1.914168e-002, 1.529193e-002, 3.845803e-003, 2.594360e-003, -5.139295e-003, 1.890414e-003, -3.606847e-003, 3.434561e-003, 5.582654e-003, 8.818639e-003, 7.826344e-003, -1.405012e-002, -5.658429e-003, -9.480885e-003, 1.332776e-002, 1.790913e-003, 5.496100e-003, 1.160693e-002, -6.508540e-004, 3.652829e-002, -8.888576e-003, -1.439712e-002, 3.325588e-002, -1.278571e-002, 1.655472e-002, 2.710430e-002, 1.838313e-002, -2.674255e-003, 2.028106e-002, -1.530413e-002, 3.412709e-002, 1.328791e-003, 8.640195e-003, 2.788533e-002, -6.811356e-003, 9.748528e-003, -1.125297e-002, -2.851705e-003, 1.135495e-002, -5.855435e-003, -1.335651e-002, 1.553197e-002, 6.582316e-003, 3.303528e-003, 3.515690e-002, 2.409641e-002, 2.919760e-002, -2.231584e-002, 6.398942e-003, -7.561181e-003, 4.555767e-003, 1.220802e-003, 5.809164e-003, 1.820443e-002, -5.082829e-003, -2.588000e-002, -2.945873e-002, -5.765469e-003, 2.345454e-002, 1.268461e-002, 2.119026e-002, 3.797981e-003, 3.686331e-002, -1.015341e-003, -3.562578e-003, -1.063272e-002, -5.822621e-003, 1.034975e-002, -4.906822e-003, 9.458353e-003, 1.641178e-003, -7.250052e-003, 7.249463e-003, -2.137459e-002, 7.249463e-003, -7.250052e-003, 1.641178e-003, 2.437415e-003, -4.184912e-003, -2.024953e-003, 1.642750e-002, -4.279043e-002, -1.151215e-004, -1.468182e-002, 6.659346e-003, 2.924775e-002, -1.900182e-003, -7.934817e-004, -1.898839e-002, 2.076038e-002, 1.412796e-002, -6.661500e-004, -4.700307e-002, -1.064009e-002, -2.633894e-002, 3.245717e-002, 3.892703e-002, -2.831204e-001, 1.724917e-002, 1.334117e-002, 6.969533e-002, -5.514768e-003, 1.766200e-003, -1.056445e-002, -7.130420e-003, 2.522285e-002, -7.130420e-003, -1.056445e-002, 1.766200e-003, 1.217399e-003, 2.236196e-002, -2.675582e-002, 2.274643e-002, -4.276722e-003, -4.626697e-002, -6.771255e-003, 6.091909e-003, -3.370209e-002, 3.628110e-002, -4.836758e-002, 4.198523e-002, -8.659089e-002, -3.013532e-002, -4.647147e-002, -4.264606e-002, -3.055551e-002, 3.391601e-002, -1.161682e-001, -9.361989e-002, -6.800722e-002, -1.890412e-002, 9.221017e-002, 3.423278e-002, -6.009001e-003, 3.702354e-003, -2.193044e-003, 1.277133e-003, -4.597353e-002, 1.277133e-003, -2.193044e-003, 3.702354e-003, 1.875911e-002, -6.846558e-003, -7.694414e-003, 9.882122e-003, -5.951783e-003, -1.765018e-002, -3.820545e-002, 1.274307e-002, -1.243637e-002, 1.346168e-002, -5.560326e-002, 3.708568e-002, 4.375243e-003, 5.508214e-002, -1.354916e-002, -2.783273e-002, -2.574542e-002, 1.929874e-002, -2.580486e-002, 1.439333e-003, 9.221527e-002, -7.085098e-002, -5.290472e-002, 4.020895e-003, 1.823245e-003, 6.651162e-003, -1.338412e-002, -1.069672e-002, 6.320992e-002, -1.069672e-002, -1.338412e-002, 6.651162e-003, 1.932690e-002, 2.592560e-003, -4.183705e-002, 3.236651e-002, 1.357309e-002, -1.116283e-002, -3.122916e-002, -4.362818e-002, -5.437206e-004, -2.918924e-002, -1.705250e-002, 3.752435e-003, -1.447429e-002, 7.911576e-002, 2.315634e-002, 1.445385e-002, -1.636638e-002, -2.353488e-002, -8.508771e-003, -1.765595e-002, 9.425092e-002, 3.489518e-002, -2.127974e-002, 2.417688e-002, -1.860096e-002, -9.479283e-003, 1.312311e-002, -9.479283e-003, -5.382559e-002, -4.259871e-002, 8.827962e-002, -8.147076e-002, 1.241922e-003, -3.203386e-002, 1.246112e-001, -3.203386e-002, -3.382945e-002, -2.617071e-001, 3.776599e-002, 2.989956e-001, -9.168702e-003, -6.294295e-002, 2.105345e-001, -6.294295e-002, 8.701508e-002, 1.665116e-002, -4.929975e-003, -6.003525e-002, 2.056769e-002, 1.468898e-002, -6.087989e-003, 1.468898e-002, 4.389609e-002, -5.119693e-002, 1.016311e-001, 3.506372e-002, 4.681914e-003, 7.212082e-003, 2.073152e-002, 7.212082e-003, 8.765572e-002, 3.844847e-002, 5.353607e-002, -5.017976e-002, 2.213548e-002, 1.747700e-002, 2.979009e-002, 1.747700e-002, 2.118646e-002, 4.640090e-002, -1.347690e-002, -2.288020e-001, 2.482251e-002, 2.389724e-002, -7.004738e-002, 2.389724e-002, -4.303396e-002, -2.372382e-002, 7.802850e-002, 2.243585e-002, -4.173627e-002, 4.745707e-002, -7.132713e-002, 4.745707e-002, 7.144537e-002, -1.189101e-001, 5.029130e-002, -4.883097e-002, -1.198826e-002, 4.050707e-003, 5.995171e-002, 4.050707e-003, -7.261749e-002, -4.146297e-002, 1.748994e-001, -3.300761e-002, -3.117432e-002, -3.611442e-002, 1.096533e-001, -3.611442e-002, -3.153538e-002, 8.996667e-002, -9.462033e-002, 8.533548e-002, -1.112904e-002, 1.727133e-002, 1.640359e-002, 1.727133e-002, -1.547278e-002, -7.392532e-002, -1.104210e-001, 3.682306e-002, 4.014117e-002, 1.922728e-003, 3.514278e-002, 1.922728e-003, 1.370119e-002, -5.705643e-002, 3.405955e-002, -1.225191e-001, 1.664892e-002, 1.058342e-002, 6.746253e-003, 1.058342e-002, -1.352866e-001, 1.349984e-001, -4.327588e-002, -8.946224e-003, 2.050466e-002, 2.219524e-002, 1.591151e-002, 2.219524e-002, 5.675521e-002, -5.831775e-002, -4.351900e-002, 1.469444e-001, -

© ISO/IEC 2004 — All rights reserved


Copyright International Organization for Standardization
Provided by IHS under license with ISO
No reproduction or networking permitted without license from IHS
Not for Resale

9.983062e-003, 2.466122e-002, 1.054236e-001, 2.466122e-002, -6.922488e-003, -5.384518e-002, -2.554544e-001, -6.585660e-002, -1.720582e-002, 1.749419e-002, -4.496696e-002, 1.749419e-002, -9.636389e-002, 1.946850e-001, -1.491912e-003, -1.425798e-001},
{-3.300077e-004, 8.870165e-004, 2.948418e-003, -6.119086e-004, -4.584326e-003, -4.979638e-003, -3.736314e-003, -2.333560e-003, 5.897747e-003, -2.333560e-003, -3.736314e-003, -4.979638e-003, -4.584326e-003, -6.119086e-004, 2.948418e-003, 8.870165e-004, -2.623904e-003, -2.121375e-003, -6.698369e-003, -8.378883e-003, 3.050947e-003, -1.247679e-002, 1.194591e-002, -4.208531e-003, -2.250218e-002, -5.324817e-003, -1.552273e-002, -9.669197e-003, -5.209329e-003, 5.318062e-003, 3.245630e-003, -1.547465e-003, -3.703366e-003, 2.349724e-002, 1.703006e-003, 2.142606e-002, 9.908922e-003, -4.773055e-004, -1.010924e-002, -1.640975e-002, 2.607936e-002, -1.493182e-002, -5.383240e-004, 1.326247e-002, 1.254944e-002, 1.323604e-003, 1.626141e-002, 1.835556e-002, 3.587982e-003, 1.061000e-002, 1.807727e-002, -1.297366e-002, -8.100262e-004, -9.513242e-003, -4.249941e-004, 2.058109e-002, 1.143652e-002, 2.558921e-002, 1.070615e-002, -1.316755e-002, 1.648542e-002, 9.038842e-003, 1.589610e-002, 3.637892e-004, -9.640413e-003, -3.902197e-003, 1.267545e-002, 1.382936e-002, 3.180314e-005, 2.194557e-003, 2.106632e-002, 1.004992e-002, -2.809622e-002, -4.618155e-002, -1.270019e-002, 9.284536e-003, 2.639695e-003, -1.846622e-003, -6.345804e-003, -9.682062e-003, 1.453372e-003, 2.017732e-002, -1.580843e-002, 2.891038e-002, -5.155868e-003, -1.162067e-002, -2.482263e-002, 2.984645e-002, -8.631575e-003, 1.146686e-002, 5.654446e-004, -3.111501e-002, -5.869903e-003, 1.479499e-002, 6.218717e-003, -1.175694e-002, 1.835996e-002, 1.355312e-002, -1.873559e-002, 4.804667e-003, 1.160634e-002, -3.324290e-002, -3.553434e-002, 2.034642e-002, 6.909649e-002, 1.314806e-002, -6.708421e-003, -1.947004e-002, 3.439255e-003, 2.790444e-003, 1.359111e-002, -1.602713e-002, 1.663542e-002, -9.070960e-003, 9.732241e-003, 1.004688e-002, 8.633732e-003, 9.989417e-003, -3.117980e-003, 3.198529e-002, 1.665668e-002, -1.515241e-002, -3.836969e-002, -7.294309e-003, -1.056102e-002, 1.923896e-003, 4.728265e-003, -6.032570e-003, -1.134163e-002, -1.240827e-003, 6.076394e-003, 1.355446e-002, -1.719692e-002, 1.355446e-002, 6.076394e-003, -1.240827e-003, 9.206366e-003, -2.948710e-002, 5.418666e-004, 1.110475e-002, 4.315208e-002, 1.402684e-002, 1.713583e-002, 8.094333e-003, -7.610907e-003, 2.016389e-002, 1.086189e-002, 1.011249e-002, -4.263844e-003, 8.360741e-002, 1.796807e-002, 2.658384e-002, -4.197875e-002, 3.333230e-002, -6.853644e-002, -1.867647e-002, 8.322111e-002, 5.915372e-002, -1.259560e-002, -3.580378e-002, 9.529275e-003, -1.304045e-003, 2.195906e-002, -1.381988e-003, 5.543291e-002, -1.381988e-003, 2.195906e-002, -1.304045e-003, -2.002849e-002, -2.240445e-002, 8.343007e-003, 8.337519e-003, 2.924309e-002, 2.380407e-002, -1.559282e-002, 5.589989e-003, -9.369318e-003, -1.130530e-002, 4.602235e-004, 8.250921e-003, -6.858344e-002, 3.635254e-002, 2.976096e-002, -9.086026e-002, 5.182592e-002, 1.638617e-002, 3.817963e-002, 7.259775e-002, 5.832024e-002, -2.222405e-002, 1.125937e-002, 5.150271e-002, 5.833332e-003, -6.362240e-003, -2.108090e-003, 1.310721e-003, 2.813263e-003, 1.310721e-003, -2.108090e-003, -6.362240e-003, 4.691082e-003, 1.310098e-002, -4.965984e-002, -6.179626e-002, 2.398567e-002, 7.689247e-002, -1.318208e-002, -4.099160e-003, 7.549906e-002, 3.563661e-002, 2.326381e-002, -5.538232e-002, 7.806944e-002, 2.569914e-002, 3.288651e-002, 1.028075e-001, 1.108855e-002, -7.123994e-003, -3.075943e-002, -3.470537e-002, -6.560761e-002, -2.869214e-002, 9.614238e-002, 3.932708e-002, -4.350982e-003, 4.685486e-004, 3.117141e-003, 7.547036e-003, -3.467291e-002, 7.547036e-003, 3.117141e-003, 4.685486e-004, 5.199987e-002, 9.282750e-003, -2.142785e-002, 1.597734e-002, 1.260392e-002, -6.317027e-002, 2.380740e-003, 1.052958e-002, 9.289503e-003, 6.578880e-002, 7.881914e-002, -4.413180e-002, -7.951439e-002, 1.101777e-002, 2.319037e-002, 2.722982e-002, -1.548892e-002, 2.969341e-002, 6.932549e-002, 5.375316e-002, -8.084955e-002, -5.733235e-003, -3.451476e-002, -4.032767e-002, 2.761879e-002, 9.572820e-003, -3.236225e-002, 9.572820e-003, -8.623350e-003, -3.370076e-002, -1.747189e-002, 1.841859e-002, -3.561138e-002, 5.558843e-002, -3.497385e-001, 5.558843e-002, -3.901663e-002, -5.978856e-002, -4.793469e-002, 1.408525e-002, -1.002442e-003, 5.338104e-002, -1.145222e-001, 5.338104e-002, 1.919595e-002, -1.143245e-001, 3.602383e-002, 3.109758e-002, 3.125790e-002, -2.776106e-002, -8.476190e-002, -2.776106e-002, 3.584613e-002, -6.430084e-002, 1.240408e-001, 1.192602e-002, -2.170791e-002, -7.656459e-003, 3.846131e-002, -7.656459e-003, -3.026499e-002, -1.183870e-001, -4.874811e-002, 5.202883e-002, 1.835886e-002, 3.102239e-002, 1.008464e-001, 3.102239e-002, -2.875400e-002, 1.576582e-001, -5.493153e-002, -5.315204e-002, -4.975270e-003, 2.846004e-002, -5.401326e-002, 2.846004e-002, 4.072404e-002, 3.248573e-002, 8.080330e-002, -1.601870e-001, -1.575091e-002, -1.741503e-002, -5.362501e-002, -1.741503e-002, -1.868595e-003, -1.435406e-001, 9.610270e-002, -1.622792e-001, 3.586642e-002, 5.501754e-004, 4.062881e-002, 5.501754e-004, -7.402119e-002, 4.924088e-003, -1.981468e-001, -1.407411e-001, -3.141308e-002, -3.801454e-002, -7.408703e-002, -3.801454e-002, -1.377604e-001, 6.845021e-002, -8.464930e-004, -8.933501e-002, -5.003022e-002, -2.038682e-002, -4.330584e-002, -2.038682e-002, -1.148398e-001, -2.010645e-001, -5.161756e-003, -2.782456e-002, 3.798541e-003, 1.044166e-002, 1.743885e-002, 1.044166e-002, -2.177016e-002, 4.310266e-002, -1.045113e-001, -2.332591e-001, -2.238729e-002, -9.148007e-003, -5.832425e-003, -9.148007e-003, -3.356573e-002, 5.863493e-002, -1.229780e-001, -9.754455e-002, 2.376728e-002, 7.736301e-003, -9.090582e-002, 7.736301e-003, 1.314593e-002, 9.016922e-002, 1.740175e-001, -8.142613e-002,


© ISO/IEC 2004 — All rights reserved

Copyright International Organization for Standardization
Provided by IHS under license with ISO
No reproduction or networking permitted without license from IHS
Not for Resale

3.707572e-002, -1.429114e-002, -1.446013e-001, -1.429114e-002, -5.250339e-002, -9.177711e-002, -5.397188e-003, -1.332110e-001, 4.804978e-003, -4.569920e-004, 2.636213e-002, -4.569920e-004, -2.262443e-002, -6.108916e-002, -1.620620e-001, 1.216125e-001}, {3.702617e-004, 3.034030e-004, 7.901274e-003, 6.436042e-004, -4.165770e-003, -2.422400e-003, 3.330114e-003, -2.203374e-003, 2.836764e-003, -2.203374e-003, 3.330114e-003, -2.422400e-003, -4.165770e-003, 6.436042e-004, 7.901274e-003, 3.034030e-004, 1.125346e-002, 4.985183e-003, -2.004301e-003, 8.336297e-003, 1.607994e-002, 6.757308e-003, 5.594890e-004, 1.354816e-002, 3.176692e-003, -1.947719e-002, -1.995428e-003, 1.332290e-002, 4.182109e-003, 4.061380e-003, 3.477692e-003, -6.540904e-003, 5.220530e-003, 7.817385e-003, -4.117873e-003, -1.525651e-002, 4.854451e-003, 2.987485e-002, -4.457656e-003, 2.616613e-004, -2.096463e-002, 6.213043e-003, 1.902855e-002, 9.352512e-004, -2.542532e-002, -6.025565e-003, -8.783790e-003, -1.760115e-004, -9.412753e-003, -2.772693e-002, 5.396099e-003, 7.628660e-003, 7.050229e-003, 4.375759e-003, -2.454541e-002, 4.344200e-003, -1.267379e-002, 6.160361e-003, 3.430371e-003, -2.901817e-002, -1.375985e-002, 5.554949e-003, -1.640573e-003, 1.590927e-002, -1.600917e-002, -1.827551e-003, 1.468986e-002, -7.075567e-003, 1.202422e-002, -2.080321e-002, 2.115834e-003, 1.018095e-003, -6.876359e-003, -5.208891e-003, 1.117168e-003, -4.018666e-002, -5.406398e-003, -1.641523e-002, -1.903540e-002, -7.045989e-003, -1.044036e-002, 4.798924e-003, 7.225833e-003, -4.843023e-003, 2.634539e-002, -2.654783e-002, -9.222032e-004, 7.511827e-003, -6.983561e-004, -3.079199e-002, -2.593441e-002, -6.770287e-003, -1.234581e-002, 4.382186e-003, -1.149530e-002, -2.060510e-002, -3.763657e-002, 1.028469e-002, 1.704655e-002, -3.015379e-002, -2.711789e-003, 4.226672e-003, 2.101613e-003, -1.162272e-002, 2.027754e-003, 5.928838e-003, 1.527396e-002, 3.969500e-002, 3.142266e-003, -1.405137e-002, -5.108825e-003, -4.149753e-003, 7.650609e-004, 4.953563e-003, 2.036647e-002, 2.416842e-002, 3.518999e-002, 3.250196e-002, 4.591394e-002, 3.819793e-002, 5.914974e-002, 3.440695e-002, 1.663073e-002, 3.360547e-002, 2.013634e-002, -1.027818e-003, 5.829663e-003, 6.936357e-003, -7.117098e-003, -5.747384e-003, 1.211272e-002, -2.000833e-003, -5.753824e-003, -2.000833e-003, 1.211272e-002, -5.747384e-003, -3.397064e-002, -9.478579e-003, 5.658711e-003, -1.558513e-002, -6.368524e-003, -4.507903e-002, 3.752632e-002, 1.142923e-002, -8.671792e-003, 6.357664e-002, 1.996171e-003, 1.460636e-002, 8.137465e-002, 1.134922e-001, 2.557401e-002, 3.327928e-002, 2.857688e-002, 8.020105e-002, 6.029848e-004, 2.111458e-002, -1.255494e-001, 2.562401e-002, 7.494674e-002, 2.842189e-002, 1.629056e-002, -5.467171e-003, 2.882246e-003, -5.639838e-003, -9.840274e-003, -5.639838e-003, 2.882246e-003, -5.467171e-003, 1.548424e-002, -8.091205e-003, 1.759846e-002, 5.714135e-002, -1.405451e-002, 1.554308e-002, 7.489570e-003, 1.026242e-002, 7.388548e-002, -4.352760e-002, 5.328938e-003, -3.069847e-002, -8.433625e-002, -9.637309e-002, -5.488643e-002, 2.104971e-003, 2.233057e-002, -1.432451e-001, 4.628812e-002, 1.240914e-001, -3.809758e-002, -1.548917e-001, -2.770570e-002, 4.911214e-002, 2.693252e-003, -8.997199e-003, -1.133033e-003, 4.524494e-003, 1.104207e-002, 4.524494e-003, -1.133033e-003, -8.997199e-003, 7.496785e-003, -1.177841e-003, 4.455037e-002, -7.155339e-003, 1.981722e-002, -2.564020e-002, -7.403815e-003, -4.350512e-002, 3.974820e-002, -6.956602e-003, -1.965887e-002, 4.558147e-002, 1.769254e-002, -1.234095e-003, 1.435311e-002, 4.217867e-002, -3.446285e-002, 2.104621e-002, -2.490240e-002, 3.558948e-002, 1.265531e-001, -9.867501e-003, -2.063821e-002, -2.835890e-002, -1.149645e-002, -1.113618e-002, -1.420223e-002, -7.551853e-003, 4.698438e-002, -7.551853e-003, -1.420223e-002, -1.113618e-002, 4.929923e-002, -7.537075e-002, 2.070535e-002, -2.176547e-002, -9.364885e-003, 9.403039e-004, 2.361118e-002, 2.557010e-002, 6.602634e-002, -4.322952e-002, 1.701550e-002, 1.375432e-002, -9.464943e-002, 1.102851e-001, 3.676167e-002, 1.475024e-002, -5.615919e-002, 6.570797e-003, -4.066138e-002, 1.901120e-002, -3.120647e-002, 6.393447e-002, 4.933942e-002, 2.311390e-002, 1.515425e-002, 6.743224e-003, 1.695747e-002, 6.743224e-003, 4.206269e-002, -3.302334e-002, 1.483666e-001, 1.866043e-003, 9.773048e-003, -5.305518e-002, 1.703777e-001, -5.305518e-002, 2.693562e-002, -3.693404e-002, 4.569668e-003, -1.063354e-001, -6.668039e-003, -1.789413e-002, 2.672962e-001, -1.789413e-002, -8.958400e-002, -8.349498e-002, 1.745325e-002, 1.334513e-001, -1.748495e-002, 6.655871e-003, 3.588518e-004, 6.655871e-003, -8.932457e-002, 1.622815e-001, -1.730789e-001, 9.317230e-002, 4.497166e-003, -6.220398e-003, -1.964013e-002, -6.220398e-003, -1.197064e-002, -1.843168e-001, 1.592853e-001, -9.948057e-002, -3.654157e-002, 4.370446e-002, -6.143405e-002, 4.370446e-002, -9.865159e-002, -6.615551e-002, -2.217384e-001, -2.185926e-002, 4.308980e-002, -1.039981e-002, 1.256428e-001, -1.039981e-002, 1.122585e-001, 2.866106e-002, -1.239827e-001, -1.239303e-001, -2.646252e-003, 1.759967e-002, -1.790629e-002, 1.759967e-002, 6.170775e-002, -4.324510e-002, 5.227374e-002, 4.661392e-002, -1.614898e-002, -1.408116e-002, -5.175865e-002, -1.408116e-002, -9.038507e-002, 4.374523e-002, -1.083077e-002, 4.107546e-003, -1.080679e-002, 4.958078e-002, -7.009808e-003, 4.958078e-002, 2.400926e-002, -3.672844e-002, -4.967846e-002, -1.477762e-001, -4.727708e-002, -5.475217e-004, -4.971926e-002, -5.475217e-004, -1.555652e-001, 3.883462e-002, -5.690291e-002, -5.338433e-002, -8.292963e-003, -1.050806e-003, 8.375563e-002, -1.050806e-003, -5.087877e-002, -7.697810e-002, -7.544948e-002, -1.439651e-001, 1.428428e-002, 2.417040e-002, -3.777116e-003, 2.417040e-002, -4.247880e-002, -5.902335e-002, 5.485676e-003, -3.125834e-003, 1.536474e-002, -7.249785e-002, -3.457297e-002, -7.249785e-002, 1.146300e-001, -9.887461e-002, -1.667427e-002, -1.329847e-001,

© ISO/IEC 2004 — All rights reserved


Copyright International Organization for Standardization
Provided by IHS under license with ISO
No reproduction or networking permitted without license from IHS
Not for Resale

1.202831e-002, 4.794030e-002, -1.040536e-001, 4.794030e-002, -7.872973e-002, 1.309212e-001, 5.538248e-002, -8.853788e-002, 3.204529e-002, 3.203846e-002, -7.418787e-002, 3.203846e-002, 3.393562e-002, -8.040881e-003, 5.071668e-002, -5.044643e-002}, {5.163059e-004, 1.885136e-003, -4.362758e-003, 5.032546e-003, -4.667981e-003, -7.076533e-003, 5.612428e-003, -6.175508e-003, -2.925750e-003, -6.175508e-003, 5.612428e-003, -7.076533e-003, -4.667981e-003, 5.032546e-003, -4.362758e-003, 1.885136e-003, 3.220229e-003, 5.596581e-003, -1.838571e-002, -1.498147e-002, 7.385353e-003, 9.345197e-003, -2.231426e-002, -2.103065e-002, -1.032499e-002, -1.325109e-002, 4.550965e-003, -6.849357e-003, 6.250974e-003, -1.257639e-002, 4.863633e-003, -5.312487e-003, 5.824469e-003, -1.738052e-002, -8.910059e-003, 9.763931e-003, -2.366094e-003, 9.053599e-003, 2.011616e-003, -4.649604e-003, -1.809727e-002, 1.350541e-003, -1.901241e-003, -5.021884e-003, -1.076918e-002, 1.281911e-002, -6.275168e-003, -2.288345e-004, -8.931158e-003, 1.897241e-002, -9.939121e-003, 7.513846e-003, -4.423978e-002, 1.559075e-002, 2.213960e-002, -1.235642e-002, -3.219144e-002, 1.895274e-002, 1.239632e-002, 2.736991e-003, 9.773849e-003, 1.378656e-002, 1.997935e-002, 2.212248e-002, 1.516050e-002, -8.167870e-003, -2.417143e-003, 1.772650e-002, -1.065900e-002, -3.215455e-003, 8.692368e-003, 2.068908e-002, 2.890185e-003, -2.935195e-003, -1.469083e-002, -4.024246e-002, -2.977394e-002, 7.878301e-003, -9.592333e-003, 1.032800e-002, 8.698534e-003, -4.452281e-003, -2.712792e-002, 3.372967e-002, -6.185672e-003, 6.982479e-003, 1.755285e-002, 4.758099e-002, -5.934288e-003, 1.707670e-002, -2.494725e-002, 4.503064e-002, -2.289225e-002, 1.029450e-002, -1.883931e-002, 9.114979e-003, 2.611483e-002, 1.479232e-002, -1.574129e-002, -1.418697e-004, -2.394944e-002, 1.563462e-002, 1.632690e-002, 7.486046e-002, 1.545217e-002, 7.348191e-003, -1.076245e-002, 7.920976e-003, -1.684916e-002, -1.776839e-002, -8.299436e-003, -1.858280e-003, 2.009431e-002, 2.844799e-003, -8.674585e-003, 2.747322e-002, -1.450140e-002, -1.989220e-002, 9.662892e-003, -2.052669e-002, -1.273399e-002, 1.209357e-002, 1.167733e-002, -6.613203e-003, -8.126393e-004, 1.942665e-003, -4.461893e-003, -1.957129e-002, -3.685653e-003, 5.057976e-003, -2.217235e-002, 1.630415e-002, -4.562424e-002, 1.630415e-002, -2.217235e-002, 5.057976e-003, -4.153104e-003, -1.335870e-002, -2.649573e-003, 1.724329e-003, 4.008886e-002, 3.800225e-002, 2.637292e-002, -3.847707e-002, 1.922308e-002, 4.647491e-002, 7.877747e-002, 6.247455e-003, 1.187375e-001, -7.101193e-002, 5.440723e-003, -2.280600e-002, -3.339244e-002, -6.689526e-002, 2.504302e-002, -6.523637e-002, -3.718766e-002, -5.322958e-002, 1.215976e-001, 2.038290e-002, -3.823022e-003, 4.011923e-003, 1.591368e-003, -1.071209e-002, 1.343086e-002, -1.071209e-002, 1.591368e-003, 4.011923e-003, 3.896954e-003, -7.626908e-003, 4.136106e-003, 2.308455e-002, 7.648920e-003, -3.263260e-002, 2.000841e-002, 2.704370e-002, -4.228168e-002, -9.814641e-003, -2.062199e-002, -9.098010e-002, 9.299401e-003, -9.080973e-003, 7.736830e-002, -3.499226e-002, -2.225776e-002, 3.812920e-002, 8.397148e-002, -3.372620e-002, 8.610384e-003, -6.915820e-002, -7.150184e-002, -4.660094e-002, 6.673612e-003, 3.514260e-003, 7.443632e-003, -1.911634e-002, -5.382842e-003, -1.911634e-002, 7.443632e-003, 3.514260e-003, 5.818138e-003, 3.532171e-002, 3.151018e-002, 8.124050e-003, 2.776025e-002, 1.269382e-002, -3.863156e-002, 1.036046e-002, 3.142741e-003, -2.254971e-002, 2.364715e-002, -9.586508e-002, 3.720732e-004, -1.909670e-002, 6.951443e-003, 2.349720e-002, -4.853035e-002, -3.974334e-002, 9.208495e-002, -4.906258e-002, 1.086465e-002, 1.104945e-002, 8.180794e-002, -2.796380e-002, 1.351369e-003, 3.923558e-004, 2.581783e-004, 7.391898e-003, -1.428047e-002, 7.391898e-003, 2.581783e-004, 3.923558e-004, 1.139856e-002, -1.933015e-002, 2.099432e-002, -1.615788e-002, -2.091143e-002, 3.871634e-002, -2.940864e-002, 8.136608e-003, -2.593880e-002, 5.914000e-002, -1.517136e-002, 1.954888e-003, 2.637161e-002, 1.907225e-003, 8.741891e-004, -3.117768e-002, -4.541716e-002, -3.745483e-002, 3.498213e-002, -5.074618e-002, 1.077845e-001, 3.086479e-002, -1.776473e-002, -4.666686e-002, -1.047782e-002, 4.409622e-002, 6.964499e-002, 4.409622e-002, -2.221189e-002, -1.005097e-001, -9.419620e-003, 4.243495e-002, 3.722737e-002, 2.699788e-002, -2.041638e-001, 2.699788e-002, 5.900365e-002, 1.141081e-002, -1.147711e-002, 2.701727e-003, -1.136613e-002, -4.002626e-002, -8.343873e-003, -4.002626e-002, -6.637608e-002, 1.721253e-001, 3.663526e-002, 6.747235e-003, -7.781837e-003, 2.822953e-003, 4.139908e-002, 2.822953e-003, 2.781026e-002, -6.125820e-002, 2.116132e-001, -7.052165e-002, -9.392976e-003, -5.870283e-003, -8.289391e-003, -5.870283e-003, -1.038034e-001, 7.483800e-002, -4.675721e-002, -1.934251e-002, -2.104222e-002, 5.212625e-002, -2.169448e-001, 5.212625e-002, -7.721143e-002, 3.827398e-002, -1.109283e-001, -3.936022e-002, -2.092449e-003, 1.005247e-002, -1.430895e-001, 1.005247e-002, 9.134629e-002, 9.824926e-002, -3.106177e-001, 3.444002e-002, 1.741740e-002, 6.524703e-004, -7.253692e-003, 6.524703e-004, 3.700208e-002, 1.527166e-002, -2.223888e-002, -8.902241e-003, -1.251954e-003, -5.183176e-003, 2.032169e-002, -5.183176e-003, 5.588945e-003, 1.354265e-001, 4.736970e-002, 1.076917e-001, 3.641612e-002, 1.398169e-002, -9.035382e-002, 1.398169e-002, 3.040594e-002, -1.114767e-001, 1.244920e-001, 2.021494e-001, 3.396507e-002, 7.525331e-003, -1.695946e-001, 7.525331e-003, -8.778019e-003, -5.413710e-002, 1.365802e-001, 8.096247e-002, -2.613914e-002, 3.456372e-003, -1.307681e-002, 3.456372e-003, -4.723695e-002, 1.143742e-001, 4.050060e-002, 6.795740e-002, -5.367458e-003, -1.027795e-002, 4.407030e-002, -1.027795e-002, -7.086122e-002, -5.557840e-002, -1.838006e-002, -5.512063e-002, -2.312309e-002, -3.359879e-002, 1.361849e-001, -3.359879e-002, -2.491100e-002, -2.097765e-001, -1.478720e-001, 3.539961e-002, -


© ISO/IEC 2004 — All rights reserved

Copyright International Organization for Standardization
Provided by IHS under license with ISO
No reproduction or networking permitted without license from IHS
Not for Resale

1.085761e-002, -3.055670e-002, 1.949852e-001, -3.055670e-002, -3.678940e-002, -9.846802e-003, -1.744348e-001, 1.528274e-002, 4.383049e-003, 2.111496e-002, -2.201041e-002, 2.111496e-002, 4.174147e-002, -3.038351e-002, 1.696760e-003, -1.123213e-001}, {1.748904e-004, 3.681728e-004, 4.796641e-003, 2.253140e-003, -2.287487e-003, -8.062675e-003, 3.071116e-003, 6.828144e-003, -3.379772e-003, 6.828144e-003, 3.071116e-003, -8.062675e-003, -2.287487e-003, 2.253140e-003, 4.796641e-003, 3.681728e-004, 6.259512e-003, 1.763490e-002, -1.838904e-003, -7.473588e-003, -6.283017e-003, 8.246605e-003, 2.452722e-002, -5.021233e-003, -1.191886e-002, 5.996717e-003, -1.199095e-003, -1.905238e-002, -1.047886e-002, 1.303562e-002, 2.391042e-002, 2.882369e-003, -3.275934e-003, 3.765646e-003, 2.967495e-002, -1.398555e-002, -7.821824e-003, 8.895057e-003, 3.014936e-002, -2.458912e-002, -1.063067e-002, -2.788382e-003, 3.255155e-004, 8.946432e-003, 1.738807e-002, -2.907986e-003, -1.105676e-002, -9.190561e-003, -5.603413e-003, 1.629772e-002, -2.552963e-002, -3.812539e-003, 2.642177e-002, 6.410043e-003, 1.399763e-002, 1.485765e-002, -1.200486e-002, 1.715498e-002, -5.326192e-003, 5.119289e-003, 2.543630e-002, 1.048058e-002, -3.126308e-003, -1.548118e-002, -1.130152e-002, -1.612157e-002, -2.295504e-002, -9.106166e-003, -2.995591e-002, -2.923987e-002, 3.867939e-002, 3.355773e-002, -1.092547e-002, 3.862492e-003, 8.248967e-003, -4.164323e-003, -3.115231e-002, -2.335060e-002, 2.511589e-004, 1.583258e-002, -1.141221e-002, -3.525971e-003, 4.540732e-003, -3.597119e-003, -3.375185e-002, 2.614306e-002, 7.849706e-003, -2.358801e-002, -1.975749e-002, -9.647537e-003, 1.126224e-002, -1.246642e-002, 2.342124e-002, -6.693293e-003, 1.377784e-003, 1.143684e-002, -1.729944e-002, -1.250482e-003, -1.820223e-002, -1.394969e-002, 2.244814e-002, -3.055503e-002, -6.109083e-003, -2.110160e-002, 2.602919e-002, -1.121409e-002, -9.622612e-003, 1.292153e-002, -1.737121e-002, -7.432536e-003, 1.296602e-003, -1.470658e-002, -2.344293e-002, 1.159872e-002, -4.844747e-003, 1.698306e-002, 2.476926e-002, -4.900182e-002, -4.478220e-002, -5.251450e-003, -4.564673e-002, -9.555938e-003, -3.891736e-002, -5.085282e-002, -7.795158e-003, 2.776105e-002, 9.933294e-003, 1.282912e-002, -4.379737e-003, -1.052888e-002, -2.198725e-002, 7.849952e-003, 8.486700e-002, 7.849952e-003, -2.198725e-002, -1.052888e-002, -4.533966e-003, -3.273525e-003, 2.275983e-002, -1.980612e-002, 2.789569e-002, -4.371318e-002, -3.454838e-002, 2.679158e-002, 6.007822e-002, -2.113143e-002, 2.963390e-002, -2.308935e-002, 2.939178e-002, 1.331586e-001, 9.526141e-002, -2.173904e-002, 2.652552e-002, 3.267857e-003, 4.334531e-003, -1.771980e-003, -6.196277e-003, -2.400583e-003, 2.276750e-002, -2.803057e-002, 1.556462e-002, -5.632775e-003, -3.106914e-003, -1.376735e-003, 2.397979e-002, -1.376735e-003, -3.106914e-003, -5.632775e-003, 2.990912e-004, -5.811975e-002, -7.533414e-003, -1.797163e-002, 2.969152e-002, -4.472868e-002, -1.911838e-002, -9.706183e-003, 1.487394e-002, -4.020339e-002, 8.463872e-002, -1.067355e-001, 3.814706e-002, -1.768882e-002, 1.092196e-001, -8.437625e-003, 2.826787e-002, 2.470253e-002, 6.083662e-002, -2.026931e-002, -3.170978e-002, 1.011153e-001, 7.984607e-003, -9.670153e-003, -1.416043e-003, -4.455003e-003, 1.101580e-002, -2.546697e-002, -5.254647e-003, -2.546697e-002, 1.101580e-002, -4.455003e-003, 6.834829e-003, -2.504618e-002, -1.547492e-002, -9.462467e-003, 6.109333e-002, 9.086632e-004, 5.479898e-004, 1.735999e-002, -2.036334e-002, -4.126648e-002, 4.091302e-003, -1.959980e-002, 9.712753e-002, -1.116611e-001, 4.706794e-002, -5.636696e-002, 2.855906e-002, 2.481982e-002, 8.464273e-003, 9.387949e-002, -1.125587e-004, 9.729917e-002, -1.789053e-003, 5.643844e-002, -9.593945e-003, -8.477705e-003, -5.543023e-003, -1.169746e-002, -1.644529e-002, -1.169746e-002, -5.543023e-003, -8.477705e-003, 3.710728e-002, -2.995912e-002, 4.724795e-002, -1.673232e-002, 1.040521e-002, -2.921900e-002, 2.550417e-002, -1.939609e-002, 2.863242e-003, 3.836592e-003, 1.729956e-002, -5.889581e-002, -3.974703e-002, -4.685158e-002, 2.464814e-002, -3.664829e-002, 5.057295e-002, -7.258434e-003, 1.033314e-001, 4.083308e-002, -7.497152e-002, 2.417170e-002, -1.742900e-002, 7.004209e-002, 3.777397e-002, 2.292522e-002, -8.295679e-002, 2.292522e-002, 3.254091e-002, -5.147749e-002, 2.439978e-001, -7.733788e-003, -2.291810e-002, -2.299475e-002, -2.675459e-003, -2.299475e-002, -9.233344e-002, 4.497284e-003, 6.121488e-002, 1.041707e-001, 2.961563e-002, 5.549991e-002, 6.725176e-004, 5.549991e-002, 6.294570e-002, -1.932159e-001, 2.450767e-002, 1.668793e-001, -3.270896e-002, 8.098166e-004, -3.698507e-002, 8.098166e-004, -5.515119e-002, 1.110230e-001, 3.779068e-002, -5.745303e-002, -9.594983e-003, 4.056997e-002, -6.547996e-002, 4.056997e-002, -1.999697e-002, 9.317035e-002, -6.432141e-002, 1.132064e-002, -9.640632e-003, -4.848655e-002, 2.090846e-002, -4.848655e-002, -3.422072e-002, 6.767348e-002, -1.398080e-001, -1.020257e-001, 3.345721e-002, 1.322328e-002, -1.548722e-001, 1.322328e-002, 3.136458e-002, -3.841205e-002, 1.457298e-001, 3.625116e-002, -1.479926e-002, 1.985578e-002, 1.369363e-002, 1.985578e-002, 1.192575e-001, -9.146355e-002, -2.987080e-003, -5.726109e-002, -9.625328e-003, -2.285538e-002, 2.607233e-002, -2.285538e-002, -3.368218e-002, 1.441285e-001, -2.270277e-001, 3.277827e-002, 2.067699e-002, 8.035878e-005, 4.321703e-002, 8.035878e-005, 5.106799e-002, 1.299042e-001, 6.510260e-002, -3.405783e-002, -2.705976e-002, 5.141045e-003, 6.512126e-002, 5.141045e-003, -3.429730e-002, -1.369994e-001, 9.227036e-002, -2.232652e-002, -1.427176e-002, 1.979631e-002, -1.034735e-002, 1.979631e-002, -1.136895e-001, 1.221637e-001, -3.873145e-002, -3.643598e-002, 4.139986e-003, 5.941467e-003, -1.891970e-002, 5.941467e-003, -1.916293e-002, 1.585468e-002, -1.717871e-001, 2.468955e-003, -1.660769e-002, -1.677851e-002, 1.070534e-001, -1.677851e-002, 5.172667e-002, -1.052576e-001, 2.179598e-001, -2.730832e-001, -

© ISO/IEC 2004 — All rights reserved


Copyright International Organization for Standardization
Provided by IHS under license with ISO
No reproduction or networking permitted without license from IHS
Not for Resale

1.719181e-002, -4.819530e-002, 1.074008e-001, -4.819530e-002, -6.268046e-002, 6.723102e-002, 1.430726e-001, -3.838106e-002, 4.892939e-002, -3.494609e-003, 4.015927e-002, -3.494609e-003, -2.431955e-002, -5.820183e-002, 7.883182e-002, -6.090972e-002},
{-4.625436e-005, -1.461226e-003, 2.851822e-003, 4.759468e-003, -5.047235e-003, 7.612243e-003, -4.944063e-003, -3.008128e-003, 8.566578e-003, -3.008128e-003, -4.944063e-003, 7.612243e-003, -5.047235e-003, 4.759468e-003, 2.851822e-003, -1.461226e-003, 2.156116e-004, -6.487949e-003, -8.379936e-004, 2.640101e-003, 2.346463e-003, 1.764497e-002, 3.321922e-003, -6.174147e-003, -1.167186e-002, 3.900551e-004, 1.485827e-002, 2.378212e-002, 1.043655e-002, -7.069588e-003, -7.763115e-004, 8.690728e-003, 2.277581e-002, 2.799590e-002, 9.471458e-005, 1.855561e-003, -8.696105e-003, 1.195988e-002, 1.251375e-002, 6.937967e-003, 5.095509e-003, 2.933947e-002, -2.899687e-002, 2.289177e-002, 2.495382e-002, 7.647234e-003, 1.157369e-002, -1.634499e-003, 1.539960e-002, 4.090555e-003, -1.637169e-002, -2.968245e-002, -1.621662e-002, 1.830615e-002, -2.477426e-003, -1.558516e-002, 6.085968e-003, 1.559330e-002, -1.416388e-002, 2.284241e-002, -8.717239e-004, -1.182192e-002, -4.599169e-004, 5.915718e-003, 9.328917e-003, -1.910574e-003, 9.666763e-003, -8.723293e-003, -4.022031e-002, 1.142483e-002, -4.076813e-002, -1.214012e-003, 1.918897e-002, -3.600534e-003, 3.769301e-002, -1.060851e-003, -1.795244e-002, -8.440934e-003, 2.000257e-003, -1.320082e-002, 1.238409e-002, 1.081800e-002, -4.523000e-003, 3.658918e-003, 7.161208e-003, -3.824118e-002, -4.126584e-003, -1.150345e-002, -1.523419e-002, -5.288726e-002, 1.725626e-002, 2.726123e-003, 3.091787e-002, -2.375740e-002, 6.842126e-003, -4.953802e-003, 1.497607e-002, 1.282004e-002, 2.231283e-002, -1.402908e-002, -8.745789e-003, -3.154492e-002, 5.673829e-002, 1.075296e-002, -2.555718e-002, -4.195749e-002, -2.076784e-002, 3.712823e-004, 4.182638e-004, -3.534953e-003, 1.420125e-002, -2.829073e-003, 1.043448e-003, 2.678041e-002, -1.287587e-002, 2.263574e-002, -4.548736e-002, 1.792198e-002, 1.802215e-002, -1.122140e-002, 1.296476e-002, -2.481662e-002, -1.821721e-002, 4.116894e-003, 1.481375e-002, -2.816594e-002, 1.376134e-002, -9.418264e-003, 9.856369e-003, 1.507910e-002, 1.737551e-002, -1.221819e-002, 8.216992e-002, -1.221819e-002, 1.737551e-002, 1.507910e-002, -3.127494e-002, 2.953206e-002, -6.666143e-003, 2.858543e-002, 1.045600e-001, 4.304846e-002, 2.299305e-002, -2.719863e-002, -6.151310e-003, -7.981649e-003, -2.637930e-003, 4.426079e-002, -2.149115e-002, 1.796805e-002, 1.164209e-002, -4.679762e-002, -3.787509e-004, 3.023265e-002, -5.648569e-002, 5.132023e-002, 5.751535e-003, -1.707821e-001, -5.349108e-002, -2.320457e-002, -1.371372e-002, 8.868538e-003, 1.613776e-002, -4.585828e-003, 2.353792e-002, -4.585828e-003, 1.613776e-002, 8.868538e-003, -2.346215e-002, 4.972510e-002, 1.050151e-002, -1.742698e-002, -1.201044e-002, 1.270897e-002, -2.934475e-002, -1.154552e-002, 2.670653e-003, 5.594731e-002, 5.807447e-002, 3.404450e-002, 6.643003e-003, 5.374977e-002, 8.511689e-002, 4.287104e-002, -2.940315e-002, 6.646083e-002, 7.586731e-002, -1.127352e-001, 2.494404e-002, 3.706784e-002, -2.520503e-002, 6.364334e-002, -5.771453e-003, -3.245522e-003, -6.607512e-003, 1.062468e-002, -2.099481e-002, 1.062468e-002, -6.607512e-003, -3.245522e-003, 2.780990e-002, 1.089852e-002, 1.082753e-002, -1.156011e-001, -1.876476e-002, -2.077836e-002, -4.889757e-002, -4.423355e-002, 3.981697e-002, -3.684893e-002, 4.834261e-002, 5.429323e-002, 3.956697e-002, -3.075883e-002, -6.534315e-002, -2.619731e-002, -9.125403e-002, -2.220711e-002, 4.351377e-002, -1.366996e-003, -9.782180e-002, -3.095101e-002, 1.932502e-002, -6.862550e-003, 9.582548e-003, -2.408544e-003, 5.845173e-003, -8.581913e-003, -2.016611e-002, -8.581913e-003, 5.845173e-003, -2.408544e-003, 4.847440e-002, -5.816359e-003, -1.645592e-002, -5.565793e-002, -3.757404e-002, -5.675520e-002, -4.351847e-003, -4.741645e-002, 5.569332e-003, 6.492230e-003, -8.455048e-002, 5.289843e-002, -4.234885e-002, 4.409284e-002, 8.510394e-003, -1.143807e-002, -3.543526e-002, -2.055425e-002, -3.742370e-002, 1.236266e-002, 4.656820e-002, -8.933094e-003, 1.968912e-002, 4.828929e-003, 8.194817e-003, -3.151884e-002, -1.204349e-001, -3.151884e-002, 3.833555e-002, 4.515400e-002, 2.002489e-002, 3.745057e-002, -1.298962e-002, 1.290231e-002, -3.227422e-001, 1.290231e-002, 8.116535e-002, -3.709940e-003, -2.032091e-002, -6.983216e-002, -2.956315e-002, -7.166166e-002, 2.699779e-003, -7.166166e-002, -1.330441e-001, -5.858493e-002, 6.715457e-002, 4.864572e-002, 4.043612e-002, -1.822838e-002, -9.435351e-002, -1.822838e-002, -5.255938e-002, 1.027873e-003, -1.313441e-001, -2.228545e-002, -2.307746e-004, -1.695148e-002, -8.053496e-003, -1.695148e-002, 8.032149e-002, -9.002850e-002, -2.058019e-001, 7.519910e-002, 1.488195e-002, -4.966953e-002, -6.916257e-002, -4.966953e-002, 8.012442e-002, 8.315320e-002, 4.301033e-002, -1.226791e-001, -3.016839e-002, -2.821289e-002, -9.128838e-002, -2.821289e-002, -9.283392e-003, -1.482229e-002, -2.992325e-002, 2.196441e-002, 5.581695e-003, -3.656185e-002, 2.709886e-002, -3.656185e-002, -9.787032e-002, 4.614334e-002, -1.806585e-001, -2.095154e-002, -3.772767e-002, -1.626180e-002, -3.096446e-002, -1.626180e-002, 5.128518e-002, -1.677956e-001, 6.284386e-002, 1.171906e-001, -1.205066e-002, 6.457031e-003, 2.884625e-002, 6.457031e-003, 7.100464e-002, -3.785788e-002, -2.145766e-001, 1.294797e-001, -1.806961e-004, 4.913335e-002, -2.805067e-002, 4.913335e-002, -5.763584e-002, 6.157418e-002, -2.075059e-001, 5.209923e-002, -6.349813e-002, -3.638611e-002, 1.185602e-001, -3.638611e-002, -5.558051e-002, 4.271412e-002, 9.859714e-003, -5.480695e-002, 3.239278e-002, 1.735319e-002, -4.213298e-002, 1.735319e-002, 5.444818e-003, -2.312759e-002, 2.162985e-002, 1.328764e-001, 1.161409e-002, 5.169288e-002, -6.597996e-002, 5.169288e-002, -5.400345e-002, 1.079236e-003, 1.533220e-001, 5.667277e-002,


© ISO/IEC 2004 — All rights reserved

Copyright International Organization for Standardization
Provided by IHS under license with ISO
No reproduction or networking permitted without license from IHS
Not for Resale

3.600008e-002, 1.663895e-002, -8.596518e-002, 1.663895e-002, -8.384112e-003, -2.222246e-002, 3.939613e-002, 8.288062e-002, 3.726130e-002, 2.044403e-003, 6.929990e-002, 2.044403e-003, -2.398756e-002, 2.046038e-001, 1.456500e-001, -1.136018e-001}, {-7.564283e-004, 2.416682e-003, -7.915717e-003, -5.842837e-004, 1.888847e-003, 6.406016e-003, 1.094266e-002, -7.010776e-003, 1.555559e-002, -7.010776e-003, 1.094266e-002, 6.406016e-003, 1.888847e-003, -5.842837e-004, -7.915717e-003, 2.416682e-003, -7.112032e-003, -1.669829e-003, -5.221265e-004, -1.518826e-002, -8.006866e-003, 2.477584e-002, 9.067488e-003, -1.750311e-002, 1.543473e-002, 5.722183e-003, -6.964960e-005, 2.403893e-003, -1.214811e-002, -4.277704e-005, 8.102213e-003, -1.225066e-003, 9.381120e-003, -1.452260e-002, -1.596754e-002, -3.372903e-002, -7.554245e-003, -1.523749e-002, -4.736641e-003, 1.149985e-002, -5.618439e-003, -1.265573e-003, -1.597383e-002, 1.372124e-002, 1.737525e-003, 1.226145e-002, 6.632733e-004, 1.166992e-002, 4.538047e-004, -2.756998e-002, -2.484157e-002, 7.192545e-004, 1.041554e-002, -2.304536e-003, 3.956248e-002, 3.462909e-002, -2.260051e-002, 1.803336e-002, -1.008955e-002, -3.006686e-003, 3.522886e-004, -1.483621e-002, -9.648630e-004, -1.491196e-002, 2.332356e-002, 8.178639e-003, 2.895835e-002, -1.055268e-002, 1.977736e-002, 1.435777e-002, 5.445491e-003, -3.304612e-002, -2.477728e-002, -1.033601e-002, -1.309488e-002, -6.400773e-004, 4.014278e-002, -1.140149e-002, -6.115041e-003, -9.218564e-003, 8.308479e-004, 4.191475e-003, 4.299610e-003, -1.374038e-002, -3.981941e-003, -1.988803e-002, 4.917981e-003, 3.026979e-003, -1.177352e-002, -3.509222e-002, -5.588493e-003, 1.476468e-002, 3.424997e-002, -1.629508e-002, -2.027949e-002, 1.613803e-002, 1.272399e-002, -1.373679e-002, -8.284888e-003, -1.533069e-002, -2.246368e-002, -1.195088e-002, 1.388940e-002, -1.158657e-002, -5.955036e-003, -7.026068e-002, -1.518281e-002, 1.755239e-002, 1.644756e-002, -2.530742e-002, 8.891840e-004, -4.238326e-002, -1.384543e-002, 5.118214e-003, -2.387767e-002, 8.091100e-003, -2.092866e-002, 5.251349e-003, 3.127163e-002, 2.556376e-002, -9.178458e-005, 4.701801e-002, -1.714302e-003, 3.319037e-002, 2.531721e-002, -9.419973e-003, -1.423727e-002, -1.402741e-002, -2.235854e-004, 2.638982e-004, -1.836929e-004, -5.438484e-003, 2.250696e-002, -5.438484e-003, -1.836929e-004, 2.638982e-004, 4.730891e-003, 4.420380e-002, 1.881144e-003, 3.847309e-002, 8.362882e-003, -3.996214e-002, 2.099205e-002, -3.866990e-002, 8.466584e-003, 3.284680e-002, 1.360346e-002, 2.360744e-002, -3.096730e-002, 3.943409e-002, 3.285817e-002, 5.511049e-002, -3.349090e-002, 3.632955e-003, 1.875003e-001, -3.172006e-002, -1.027927e-001, -1.503218e-001, 8.001002e-002, 1.165718e-003, -4.497362e-003, 9.166778e-003, 7.647055e-003, -2.634081e-002, 2.326465e-002, -2.634081e-002, 7.647055e-003, 9.166778e-003, 3.444423e-004, 3.340735e-002, 4.164130e-002, -1.248858e-001, 7.102271e-003, -4.447614e-002, 5.320482e-002, -7.353811e-003, 4.415802e-002, -1.215078e-002, -7.697806e-002, 5.465062e-002, -6.253856e-002, -2.428046e-002, 1.688442e-002, 2.970193e-002, -7.516623e-003, -2.383209e-002, 1.018923e-001, 4.009980e-002, -8.109724e-003, -3.434106e-002, 8.243593e-003, 1.653067e-002, 3.859504e-003, 9.505427e-003, 1.722601e-003, -1.497215e-002, -4.054950e-002, -1.497215e-002, 1.722601e-003, 9.505427e-003, -2.695181e-002, 2.258378e-002, 3.158768e-002, -8.188520e-002, 4.444817e-002, 2.586373e-002, -4.298554e-003, 1.955098e-002, 7.829510e-003, 4.329315e-002, 1.452789e-003, 1.089150e-001, 5.230734e-002, 1.911330e-004, 1.127607e-002, 5.552244e-002, 3.713219e-003, -9.669548e-003, 7.504099e-002, -8.046472e-002, -5.831255e-002, 4.500854e-002, -4.355557e-002, 1.186265e-001, 1.050150e-004, 9.656083e-003, 2.952632e-002, -1.135142e-002, -7.262474e-002, -1.135142e-002, 2.952632e-002, 9.656083e-003, 1.341649e-002, -1.719362e-002, -1.968014e-002, 5.865364e-002, -2.755596e-002, 1.972607e-003, 3.274027e-002, 5.503461e-002, 1.337481e-002, 8.090338e-002, -2.895965e-002, 8.027312e-002, 3.951241e-002, 1.004566e-001, 6.249246e-002, 1.825338e-002, 2.647156e-002, 1.125767e-001, 4.652983e-003, -8.878514e-002, -6.636173e-002, 6.719906e-002, 1.235045e-002, -2.828742e-002, -3.008450e-002, 1.780383e-003, -5.207271e-002, 1.780383e-003, -5.232026e-002, -5.857194e-002, 5.706006e-002, 2.475003e-004, 2.986281e-002, -1.150445e-003, 2.709543e-002, -1.150445e-003, 2.111943e-002, 1.664496e-001, 1.822008e-002, 5.059014e-002, -1.824227e-002, 5.642047e-003, -2.374673e-001, 5.642047e-003, -8.524682e-002, -1.001562e-001, -5.911402e-002, -1.322561e-001, 2.700105e-003, -6.120141e-003, 1.158149e-001, -6.120141e-003, -4.976572e-002, 1.037540e-001, -4.693379e-002, -1.062716e-002, 5.755891e-004, -3.090281e-003, -3.779558e-002, -3.090281e-003, 4.770278e-002, -1.461080e-002, -7.029818e-002, 7.009008e-002, -5.774859e-004, 3.270508e-002, -6.083923e-002, 3.270508e-002, -1.130373e-001, 3.907149e-002, -6.614680e-002, -2.429401e-001, 8.626754e-003, -1.421584e-002, -1.267648e-001, -1.421584e-002, 1.432181e-002, -1.399489e-001, 2.495396e-001, 1.396345e-002, 2.418047e-003, -4.866162e-002, -2.235285e-002, -4.866162e-002, 6.907355e-002, 5.825878e-002, 1.073118e-002, -6.198212e-002, 1.572367e-002, -1.652758e-002, 1.244772e-002, -1.652758e-002, 4.410143e-002, -1.350802e-001, -8.088237e-002, -1.048629e-001, -1.339534e-002, 3.357469e-002, -8.220700e-002, 3.357469e-002, -3.044168e-002, -3.917389e-002, 6.384499e-002, -6.642511e-003, -6.742749e-003, -1.859614e-002, -8.258150e-002, -1.859614e-002, -8.390310e-002, -2.362066e-001, 4.914000e-002, -2.083698e-002, 1.442719e-002, -1.873459e-002, -1.659237e-002, -1.873459e-002, 5.850316e-002, -7.473074e-002, -4.820741e-002, -6.353433e-002, -1.741883e-003, 4.141758e-003, 4.302962e-002, 4.141758e-003, 2.412896e-002, 5.675247e-002, -1.387175e-001, -7.656593e-002, 3.273060e-003, -3.236908e-002, 6.670105e-002, -3.236908e-002, -7.174870e-002, 1.127256e-001, -5.068907e-003, 6.383881e-003, -

© ISO/IEC 2004 — All rights reserved


--`,,```,,,,````-`-`,,`,,`,`,,`---

Copyright International Organization for Standardization
Provided by IHS under license with ISO
No reproduction or networking permitted without license from IHS
Not for Resale

1.209126e-002, -2.763141e-003, -1.290239e-002, -2.763141e-003, -1.107172e-001, 4.508006e-002, 2.047786e-001, -1.136743e-001, 4.511826e-003, -1.972466e-002, 3.833991e-002, -1.972466e-002, -6.980882e-002, -2.894001e-002, 6.479246e-002, -4.256391e-002}, {8.467321e-004, -3.202377e-003, 1.404184e-003, 1.117879e-003, 1.262188e-003, 1.961737e-003, -1.010730e-002, 1.793184e-003, 2.715968e-002, 1.793184e-003, -1.010730e-002, 1.961737e-003, 1.262188e-003, 1.117879e-003, 1.404184e-003, -3.202377e-003, 3.380545e-003, -9.132141e-003, 5.566324e-003, -6.169311e-004, -2.235447e-003, 9.304775e-003, -2.340071e-002, 7.515816e-003, -1.700897e-002, 3.539355e-003, -1.679558e-003, -3.582176e-003, 4.918141e-003, 1.850290e-002, -3.237326e-003, -2.191092e-003, -1.378374e-002, 1.500420e-002, 1.140012e-002, -4.727755e-003, -1.149329e-002, -2.499181e-003, 2.139677e-002, -2.462507e-002, -7.926378e-003, 2.304373e-002, 3.037272e-002, 2.672043e-002, -1.144305e-002, 1.457397e-002, 2.037652e-002, -2.252695e-003, 1.108413e-002, -2.504378e-002, -7.380119e-003, 3.315726e-003, 7.694269e-003, -1.434465e-002, 3.911180e-003, -7.529854e-003, -5.440304e-003, 2.628931e-002, -7.047236e-003, -2.626758e-002, -8.933790e-003, 7.881078e-003, 2.543842e-002, 1.433519e-002, 1.401935e-003, -5.030798e-004, -3.880446e-003, 1.599407e-002, 5.064613e-002, 2.315211e-002, 2.835448e-003, 4.555490e-002, 2.400335e-002, 3.090079e-003, 1.600654e-004, 2.621328e-002, 1.544079e-002, -3.047745e-003, -4.125589e-003, 1.726627e-003, -1.466750e-002, 1.541977e-002, 1.498249e-002, 1.939255e-002, -2.187681e-002, -3.279132e-002, -9.843786e-004, -1.187812e-003, 1.184581e-002, -7.144810e-003, 3.376380e-002, 1.634444e-002, 2.028673e-002, -1.048365e-002, 3.195228e-004, 1.714840e-003, -9.607562e-003, 3.064966e-002, 1.478449e-002, 2.839730e-002, -9.647972e-003, -1.396081e-002, 5.486722e-003, -1.512158e-002, 2.843869e-002, -4.777151e-003, 2.877193e-002, -1.392799e-002, 2.167293e-002, 7.472856e-003, 4.674503e-002, 8.647196e-003, -2.730567e-002, 3.096656e-004, -1.443527e-002, 3.041431e-002, -6.494146e-003, -4.317333e-002, -2.135656e-002, -2.431727e-002, -7.483285e-002, -1.305582e-002, -1.093699e-002, 1.780948e-002, -2.065504e-002, -1.068728e-002, 2.300505e-002, -7.833035e-003, -2.468324e-003, 1.000899e-002, 1.578142e-003, 2.888212e-002, 1.575373e-002, 2.888212e-002, 1.578142e-003, 1.000899e-002, -2.526109e-002, -1.230772e-002, 1.620287e-002, 5.822929e-002, -4.352292e-002, -4.263540e-002, 1.314970e-002, 8.567707e-003, -3.729345e-003, 1.098082e-001, -6.474083e-002, 8.384898e-002, 9.607287e-002, -6.190461e-002, 1.228342e-001, 6.671494e-002, -3.750030e-002, -1.945630e-002, -5.836676e-002, 5.641091e-002, 1.460613e-002, 7.024384e-002, 6.946071e-002, -6.037257e-002, -1.166582e-003, -7.654761e-003, 1.020565e-003, -1.036357e-003, 5.364295e-002, -1.036357e-003, 1.020565e-003, -7.654761e-003, 1.402211e-002, 1.983205e-003, -1.264829e-002, 5.155566e-002, -6.527003e-003, -1.151071e-001, 6.412744e-002, -3.082757e-002, -9.273179e-002, -2.049660e-002, 7.661870e-002, -1.178602e-001, -3.552260e-002, -5.531074e-002, 1.068886e-001, -8.213381e-002, 4.716660e-002, 2.009400e-002, 5.256684e-002, -1.836709e-001, -1.144359e-001, 3.043431e-002, -4.988166e-002, -1.421089e-002, 2.913315e-003, -3.089070e-003, -1.050019e-002, 3.577145e-003, -5.604277e-003, 3.577145e-003, -1.050019e-002, -3.089070e-003, 4.541395e-003, -2.810002e-002, -4.180507e-002, -6.367399e-002, -1.137378e-001, 3.328127e-002, -3.222975e-002, -8.943743e-003, -4.252626e-002, -1.526805e-002, -3.270443e-002, 4.386841e-002, -6.331021e-003, 5.522678e-002, -5.226722e-002, 3.917682e-003, -2.543815e-002, 8.211421e-002, 2.497143e-002, 1.961457e-002, 1.517972e-002, -2.944143e-002, 3.081265e-002, -7.370167e-003, 1.568323e-003, -2.795929e-003, 1.495540e-002, 1.471162e-002, -3.111609e-002, 1.471162e-002, 1.495540e-002, -2.795929e-003, -2.644469e-002, 3.039101e-002, 1.175674e-003, -1.039816e-002, -3.497160e-003, -4.426912e-002, -3.343814e-002, -2.042650e-002, -3.723440e-002, -3.187634e-002, -8.773255e-002, 5.435386e-002, 5.827428e-002, -3.725357e-002, -6.840680e-002, 4.011492e-003, 6.123382e-002, -3.996143e-002, -4.954051e-003, 6.056838e-002, -3.491552e-002, -4.206875e-002, 3.002711e-002, 1.886167e-002, -6.913567e-003, -3.034669e-002, -6.506680e-002, -3.034669e-002, 1.041315e-002, -5.178025e-002, -1.960950e-001, -3.435425e-002, 5.305439e-003, -9.576710e-002, 2.752037e-001, -9.576710e-002, -1.013920e-002, -6.318993e-002, 7.504244e-003, -6.025267e-002, -8.295404e-003, 8.057541e-002, -2.996345e-002, 8.057541e-002, 1.079181e-001, 3.146111e-002, -8.833730e-002, -2.513686e-001, 1.451646e-002, 2.102222e-002, -8.186389e-002, 2.102222e-002, -8.474107e-003, -1.550742e-001, 6.367319e-002, 4.811777e-002, 1.165434e-002, 6.742883e-003, -9.899467e-002, 6.742883e-003, -1.521807e-002, -1.179670e-001, 5.811592e-002, -9.440878e-002, -1.251453e-002, 6.072259e-003, -3.048333e-002, 6.072259e-003, -3.134310e-003, -1.997033e-001, -8.259820e-002, -5.680123e-002, -5.865878e-003, 4.631233e-002, -7.051294e-002, 4.631233e-002, 9.935093e-002, 5.400054e-003, -4.779080e-002, -1.368620e-001, -1.521761e-003, 2.701188e-002, -5.915866e-002, 2.701188e-002, 5.947956e-002, -7.181249e-003, 1.121398e-001, -7.974946e-002, 2.033065e-002, -1.320818e-002, -5.301687e-003, -1.320818e-002, -2.801060e-003, 3.116173e-002, 5.681750e-002, -4.291838e-002, 8.099250e-004, 8.230121e-003, 2.642355e-002, 8.230121e-003, 6.913158e-002, 3.061114e-003, -8.346502e-002, 1.340190e-002, 5.585195e-002, -1.196045e-002, 9.379864e-002, -1.196045e-002, 4.150553e-002, -9.583714e-002, 1.057189e-001, -5.942238e-002, -2.548437e-003, -2.378574e-002, 6.468713e-002, -2.378574e-002, 5.126963e-002, -7.173071e-003, 5.706577e-002, 1.848469e-001, -1.593509e-002, 3.086625e-003, 4.565971e-002, 3.086625e-003, 1.382812e-002, 3.964093e-002, 4.861960e-002, 2.588410e-002, -2.292168e-003, 1.184526e-002, -6.316574e-002, 1.184526e-002, -4.064342e-002, 1.834560e-001, 2.671630e-002, -9.950896e-003, -


© ISO/IEC 2004 — All rights reserved

Copyright International Organization for Standardization
Provided by IHS under license with ISO
No reproduction or networking permitted without license from IHS
Not for Resale

3.776253e-002, -5.578184e-002, -1.473031e-002, -5.578184e-002, -7.032745e-003, 1.077535e-003, 1.169604e-001, 9.891711e-002, -1.397266e-002, -4.458481e-002, 2.817110e-002, -4.458481e-002, 8.044068e-002, 1.056381e-001, 7.496605e-002, -1.166862e-002},
{5.022207e-004, 1.986001e-004, 6.913101e-003, 1.785577e-003, 6.262279e-003, -1.474108e-002, 7.540379e-004, 1.374451e-002, -3.128858e-002, 1.374451e-002, 7.540379e-004, -1.474108e-002, 6.262279e-003, 1.785577e-003, 6.913101e-003, 1.986001e-004, -9.619286e-003, -9.585018e-003, -7.357403e-003, 4.669303e-004, 5.386543e-003, -6.430380e-003, -5.452372e-003, 1.465293e-002, -3.424976e-002, 1.406652e-002, -7.542222e-003, 3.122522e-003, 1.570332e-002, -1.411898e-003, -2.130386e-003, 1.870781e-002, -1.078399e-002, -9.274364e-004, -2.659183e-002, 2.319216e-004, 1.685694e-002, -1.011158e-002, -1.339870e-002, -2.631131e-002, -2.055788e-002, -5.858978e-003, 2.633148e-002, -4.204738e-003, -2.193066e-002, -3.324620e-002, -5.893930e-003, -1.936396e-002, 2.813887e-002, -7.540419e-003, 7.129810e-003, -7.707408e-003, 3.213557e-002, -2.087737e-002, 1.474357e-002, -1.890857e-002, -4.179584e-002, -2.926277e-002, 3.373380e-002, -1.514215e-002, -5.078636e-003, -3.921386e-003, -2.400034e-002, 1.812370e-002, -3.849675e-003, -9.183562e-003, -1.048175e-002, 2.985561e-003, -3.789713e-002, -2.185645e-002, 1.208257e-002, -1.909124e-002, 8.231726e-003, -3.405578e-002, 1.242005e-002, -2.482566e-002, -2.195256e-002, -3.062837e-002, 2.443909e-002, 5.166902e-003, 1.041717e-002, 1.249440e-002, -4.891302e-004, 1.438712e-002, -1.611123e-002, -2.039777e-002, 9.434557e-003, 2.894498e-002, 2.767949e-002, 1.284574e-002, 1.287382e-002, 5.149700e-002, -1.244652e-002, 2.503554e-002, -2.939019e-004, 1.649238e-002, -7.767741e-003, -2.268725e-002, -1.147228e-002, -2.696993e-003, -3.761884e-002, -8.281703e-003, 3.495331e-002, 1.200290e-002, -3.994133e-003, 1.704108e-002, -5.620762e-002, 2.737568e-002, -5.240612e-002, -8.785041e-003, -1.223659e-002, -1.959274e-002, 2.027439e-002, 7.912232e-003, 9.172905e-003, 4.741896e-002, 4.137316e-002, 2.015633e-002, -3.239675e-002, 3.997340e-002, 7.057744e-003, -4.840826e-003, -5.312107e-002, -4.032391e-002, -1.990234e-002, -2.088239e-003, 2.336334e-002, 1.755394e-002, -2.245520e-003, -1.910621e-003, -1.190694e-002, 4.218262e-003, -1.505962e-002, 4.218262e-003, -1.190694e-002, -1.910621e-003, -5.211159e-003, -1.359873e-003, -6.321600e-003, 2.290135e-002, -4.651774e-003, -9.698784e-003, -1.703577e-002, 2.979337e-002, -5.023362e-002, 1.476079e-002, -8.811080e-003, 1.942004e-002, 1.808016e-001, -1.552460e-001, -6.437156e-002, -7.694458e-003, -5.181005e-002, 4.451962e-002, -3.418306e-002, -8.202869e-002, -3.207824e-002, -4.457566e-002, 3.105117e-002, -4.472171e-002, 2.262373e-003, -2.166326e-003, -2.705534e-002, 1.673980e-003, 1.006142e-002, 1.673980e-003, -2.705534e-002, -2.166326e-003, 4.330011e-002, -5.772483e-002, -2.668738e-002, 2.083644e-002, 6.341947e-002, 1.820265e-002, 8.616614e-003, -1.172716e-002, 7.054676e-002, 1.036109e-002, -3.922993e-002, -1.569529e-001, -6.620933e-002, 7.721222e-002, 4.085855e-002, -2.562962e-002, -1.292553e-003, -6.542618e-003, -7.409255e-002, 2.858518e-002, 9.396173e-002, 7.343606e-002, -9.395488e-002, 3.387316e-003, 5.688460e-006, -2.114729e-002, -1.188630e-002, 1.051471e-002, 2.782772e-002, 1.051471e-002, -1.188630e-002, -2.114729e-002, 2.990001e-002, 6.375473e-002, -8.242291e-003, -8.997741e-002, 1.921217e-002, -3.352113e-002, 6.045888e-002, 1.155760e-002, -3.529194e-002, 1.203303e-002, -1.018498e-001, -2.731086e-002, -1.417525e-003, 1.092782e-002, 1.459067e-002, -4.255685e-002, -4.751104e-002, 6.155320e-002, -4.018920e-002, -5.083719e-002, 3.445632e-002, 8.276933e-002, -3.472676e-002, -4.733796e-003, 4.796788e-004, -1.198344e-002, -6.067469e-003, -6.815373e-003, 5.511705e-002, -6.815373e-003, -6.067469e-003, -1.198344e-002, -1.092843e-002, 1.029445e-002, 3.075572e-002, 2.689757e-002, 7.862019e-002, -2.440780e-002, 2.662762e-003, 2.453445e-002, -6.820046e-002, -5.244984e-003, -5.420873e-002, 2.160159e-002, 3.167306e-002, -9.193729e-002, -2.919900e-002, -5.108336e-002, -3.278621e-003, 8.518259e-002, -6.757993e-003, -1.073838e-002, -1.374239e-002, -9.345783e-004, -2.099330e-002, 7.410045e-002, -2.933895e-002, -8.444511e-003, 2.149627e-002, -8.444511e-003, -1.699686e-002, 4.828520e-003, -1.060443e-002, 1.305195e-001, -1.974922e-002, 9.747197e-002, -1.909301e-001, 9.747197e-002, 1.334962e-001, -2.318813e-001, -4.483712e-002, 1.178819e-001, 4.485382e-002, 2.431490e-002, -1.597527e-001, 2.431490e-002, -1.155269e-001, 1.481803e-001, 2.806658e-004, -6.973855e-002, -2.510690e-002, 2.794724e-002, -3.848885e-003, 2.794724e-002, -7.780346e-002, 1.968209e-001, -2.338932e-001, -4.197487e-002, 9.395121e-003, 3.438409e-002, 6.025958e-002, 3.438409e-002, 4.598195e-002, 1.830708e-002, 2.837563e-002, 1.577169e-002, 3.744753e-002, 3.702602e-002, -3.034717e-002, 3.702602e-002, -3.807642e-002, 1.348931e-002, 2.293486e-003, 3.690600e-002, -2.728024e-002, 5.950196e-002, 7.568440e-002, 5.950196e-002, -5.910255e-002, 1.205513e-001, 5.341281e-003, 5.734551e-002, 9.795690e-003, 5.180607e-003, -3.284532e-002, 5.180607e-003, -3.310511e-002, 7.278244e-002, -6.008031e-002, -4.605490e-002, 3.929745e-004, 2.015315e-002, -1.172150e-001, 2.015315e-002, 6.021447e-002, -1.399038e-001, 4.195176e-002, 1.088289e-001, -3.396705e-002, 1.582418e-002, 6.590397e-002, 1.582418e-002, 5.218964e-002, 7.890867e-002, 1.384279e-001, -5.272439e-002, -2.872067e-003, -2.435690e-002, 2.281237e-001, -2.435690e-002, 3.230986e-002, 8.922329e-002, 5.036513e-002, -1.785938e-002, 2.544794e-002, 1.640499e-002, 3.006022e-002, 1.640499e-002, 3.841921e-003, -1.732710e-001, -2.798247e-002, -5.628768e-002, 6.548016e-003, 5.002402e-003, 2.419605e-002, 5.002402e-003, 2.133605e-002, 9.421676e-003, -8.213591e-002, 4.363441e-002, 2.703175e-002, 4.142858e-002, 8.873858e-002, 4.142858e-002, -4.474963e-002, 1.235407e-001, -4.227220e-002, -5.419514e-002, -

© ISO/IEC 2004 — All rights reserved


Copyright International Organization for Standardization
Provided by IHS under license with ISO
No reproduction or networking permitted without license from IHS
Not for Resale

9.559220e-003, -2.758620e-002, 9.026114e-002, -2.758620e-002, 6.528258e-002, 3.486934e-002, -4.843270e-002, -3.135930e-002, -1.253697e-002, 1.836664e-002, 7.455352e-003, 1.836664e-002, 1.662223e-002, -5.403725e-002, -1.207417e-001, 8.191206e-003},
{2.215392e-004, 1.138246e-003, 1.344094e-003, 7.365223e-005, 2.871375e-003, -1.021974e-002, 1.128530e-002, 1.248107e-002, 5.267427e-003, 1.248107e-002, 1.128530e-002, -1.021974e-002, 2.871375e-003, 7.365223e-005, 1.344094e-003, 1.138246e-003, -2.496241e-004, 4.032851e-004, -2.388971e-003, 8.910666e-003, -4.587226e-003, -1.773064e-002, 6.562667e-003, 1.499314e-002, -2.110631e-002, 5.043287e-003, 1.938984e-002, -8.164652e-005, 1.086102e-002, -9.526856e-004, -7.315283e-003, -9.048252e-004, -3.017006e-003, 1.485562e-003, -1.217543e-003, -1.586686e-003, -2.450551e-003, 3.841194e-003, 1.258154e-003, 8.483974e-004, 1.702299e-002, -2.693299e-002, 8.578017e-003, -1.050083e-002, 4.683895e-003, -3.621336e-004, 2.199922e-003, -2.990289e-003, -5.233218e-003, 9.445822e-003, -1.201521e-002, 7.560092e-003, -1.291185e-002, 6.670980e-003, 5.902476e-003, -4.595095e-002, -6.998205e-003, -3.759491e-002, -5.321766e-003, 5.039909e-003, -4.037884e-003, -6.637746e-003, -3.361973e-003, 8.828950e-003, 1.011431e-002, 1.622814e-002, -2.442666e-003, -9.102333e-003, -5.528815e-003, -1.140420e-002, 6.554175e-003, -1.349338e-002, -3.721368e-002, 2.989304e-003, -2.314355e-002, -1.336910e-002, 1.561421e-002, 1.070293e-002, -1.248951e-002, -1.890000e-002, 2.547630e-002, 3.541679e-003, -1.486780e-002, -2.603716e-003, 1.676803e-004, -6.333637e-003, 2.734534e-002, -4.401822e-002, 1.873042e-002, -7.852314e-003, -3.535645e-003, -4.127077e-002, 1.586233e-002, 9.051261e-005, 1.148425e-004, -6.788189e-003, -7.536405e-003, 1.008869e-002, -1.350863e-002, 9.922188e-004, 1.315348e-002, 7.458577e-003, -2.745119e-003, 1.361873e-003, 5.083599e-002, 4.419830e-002, 9.375081e-003, 2.732681e-002, 1.397282e-002, 4.822706e-003, 2.862541e-003, -2.821581e-002, -2.604756e-002, 1.596286e-002, 1.449182e-003, 3.732457e-002, 1.856782e-003, -2.014504e-002, -5.339837e-002, -2.977747e-003, 6.730815e-002, 2.827521e-002, 1.090922e-003, 2.009267e-002, -2.996527e-002, 2.217036e-002, -2.260992e-002, -2.746013e-002, -3.207583e-003, -7.771833e-003, -9.878911e-003, 6.895660e-004, -9.228874e-002, 6.895660e-004, -9.878911e-003, -7.771833e-003, 4.562414e-003, -8.890685e-003, 8.401083e-003, -6.964007e-002, -3.074935e-002, -5.792257e-002, -5.664145e-002, -5.712260e-003, 6.080714e-003, -1.098438e-002, 9.771421e-003, -8.389449e-002, 6.771047e-002, 8.279847e-003, 3.353524e-002, 4.238619e-003, 7.940908e-003, 5.559139e-003, -7.561992e-002, -3.163288e-002, -5.512799e-002, -7.035613e-003, -2.244555e-003, 1.320426e-002, -1.342155e-003, -4.110288e-003, -8.554578e-003, -1.258851e-002, -3.117412e-002, -1.258851e-002, -8.554578e-003, -4.110288e-003, 1.771441e-002, -8.055399e-002, 1.916664e-002, -1.891620e-002, -5.756907e-003, -4.031256e-002, -6.273199e-003, 3.174935e-002, 4.881329e-004, -6.436271e-002, -4.143641e-002, 4.336346e-003, 1.415097e-002, -3.634144e-002, -1.163926e-002, -7.786887e-003, 9.229141e-002, 7.047960e-002, -3.943345e-002, -2.653548e-002, -1.101420e-003, -9.694301e-002, -4.622370e-003, -8.063894e-003, 4.566851e-003, 6.075767e-003, -1.484330e-002, 1.273068e-003, -1.619775e-002, 1.273068e-003, -1.484330e-002, 6.075767e-003, 3.013960e-002, 8.109231e-003, 2.254288e-002, -2.076489e-002, 2.196556e-002, 1.611965e-002, -1.593548e-002, -8.359824e-003, 1.557095e-002, 4.588337e-002, -1.023719e-002, 6.720194e-002, -3.541038e-002, -2.716120e-002, 1.061120e-002, 1.288920e-002, -5.216682e-002, 1.561483e-002, -2.639080e-002, 1.146771e-002, 6.461418e-002, 9.522975e-002, -5.790977e-002, 2.272487e-002, 2.044261e-004, 1.371563e-003, -1.698584e-002, -5.290530e-004, 1.860924e-002, -5.290530e-004, -1.698584e-002, 1.371563e-003, 2.650169e-002, 1.723689e-002, -3.039878e-003, 3.075493e-002, 4.761750e-002, 7.821203e-004, 9.443345e-003, 1.379269e-002, 5.277430e-002, 1.880586e-002, -1.438129e-002, 4.268686e-002, 7.005721e-002, -2.958630e-002, -1.060728e-002, 1.941455e-002, 3.241125e-002, -7.058181e-003, -5.941274e-002, -5.831741e-002, 7.155929e-002, -2.043249e-002, -3.803288e-002, 4.617997e-002, -8.147768e-003, 2.416025e-002, 6.285409e-002, 2.416025e-002, -3.094299e-002, 1.470138e-001, -7.756013e-002, -2.186467e-002, 6.810866e-003, -4.568465e-002, 2.927423e-001, -4.568465e-002, -7.204763e-002, 4.544567e-002, 8.008402e-002, 1.938962e-001, 4.795904e-002, 2.366306e-002, 4.351214e-002, 2.366306e-002, 4.294358e-003, 1.248359e-002, 1.090806e-002, 1.679365e-001, -1.288152e-002, 2.696979e-002, 2.593907e-002, 2.696979e-002, -7.149825e-002, -9.304428e-002, 7.855004e-002, 5.453210e-003, -3.619579e-003, 2.358020e-002, 5.535592e-002, 2.358020e-002, 8.702423e-002, 3.335806e-002, 1.137155e-002, -9.166923e-002, 1.748898e-003, -5.381739e-002, -1.694148e-001, -5.381739e-002, -1.679610e-002, 2.000783e-001, -8.176839e-002, 4.892320e-002, -6.368120e-002, 4.339138e-002, -9.759394e-002, 4.339138e-002, -1.073890e-002, 1.864052e-001, 8.136320e-002, -1.476418e-001, 2.726152e-002, -1.133448e-002, 3.762335e-002, -1.133448e-002, -2.151854e-002, 1.557837e-001, -8.715861e-002, -6.989717e-002, -6.728155e-003, 1.615671e-002, -3.716401e-002, 1.615671e-002, 9.501295e-002, -1.643217e-001, 2.895659e-002, 3.259655e-003, 9.094733e-003, 1.941828e-002, -4.535384e-002, 1.941828e-002, -3.973672e-003, -8.794076e-002, 1.191859e-002, 1.575052e-001, -3.595956e-003, 1.825123e-003, 1.403617e-001, 1.825123e-003, -1.328445e-001, 3.382634e-002, -2.580870e-002, -3.128020e-002, -3.575840e-002, 3.368537e-002, -7.383330e-002, 3.368537e-002, 7.927433e-003, -1.423819e-001, 7.599187e-002, 6.047904e-003, 9.060292e-003, 7.158850e-003, 1.948063e-002, 7.158850e-003, -5.189309e-002, -1.249408e-001, 1.102369e-001, 3.024130e-002, -6.860019e-003, -2.346890e-002, -9.439362e-002, -2.346890e-002, -6.580491e-002, 1.438617e-001, -4.409141e-002, 9.236672e-002,


© ISO/IEC 2004 — All rights reserved

Copyright International Organization for Standardization
Provided by IHS under license with ISO
No reproduction or networking permitted without license from IHS
Not for Resale

2.253351e-002, -2.187131e-002, -3.492737e-002, -2.187131e-002, -6.766688e-002, 1.365214e-001, -2.331345e-001, 8.435218e-002, 1.702527e-002, 2.920267e-002, -5.282947e-002, 2.920267e-002, -5.831595e-002, 6.496796e-002, 1.026695e-001, -9.687653e-002}, {-2.658103e-004, -1.209670e-004, -3.814531e-003, 6.291267e-003, 7.512400e-003, 1.168782e-003, -1.367700e-002, 5.784584e-003, 1.202919e-002, 5.784584e-003, -1.367700e-002, 1.168782e-003, 7.512400e-003, 6.291267e-003, -3.814531e-003, -1.209670e-004, 4.474993e-003, -5.815525e-003, 3.257484e-003, -2.820130e-003, -6.090318e-003, -1.014900e-002, 2.754274e-002, 1.322769e-002, -7.667247e-003, -6.963483e-003, 2.973139e-003, -1.460075e-003, -1.486256e-002, -1.355492e-002, 3.358550e-003, 7.420546e-003, -8.880670e-003, -1.681887e-002, -7.930718e-003, 1.950250e-002, -5.013203e-003, 1.742386e-002, -2.969763e-002, -1.671708e-002, -1.369933e-003, 2.864375e-002, 1.508689e-002, 1.159169e-002, 1.076085e-002, 1.171246e-003, 7.161196e-003, -1.273252e-002, -7.831330e-003, 1.414334e-002, -4.738352e-003, -3.134535e-002, -2.955190e-002, 2.474635e-002, 4.551596e-003, -2.771328e-002, -3.238854e-002, 2.621320e-002, -2.780189e-004, -1.997500e-002, 2.266038e-002, -2.299922e-003, -2.045209e-003, 8.131350e-003, -1.383246e-002, -5.998918e-004, -4.224680e-003, 1.101942e-002, 1.032029e-002, 2.526453e-003, 9.651475e-005, 3.993445e-003, -3.491878e-002, 1.064960e-002, 2.120292e-002, 1.142068e-003, 2.457875e-002, -3.522040e-002, -1.735127e-002, 7.626586e-003, 2.321618e-002, -4.566222e-003, -5.485048e-003, 2.072849e-003, 1.426319e-002, 6.817545e-002, 3.870630e-002, 5.236292e-003, 1.852388e-002, 1.475055e-002, 3.190236e-002, 2.041418e-002, -2.010176e-002, -4.058428e-002, -9.226785e-003, -2.598734e-002, 2.057664e-002, 6.820096e-003, -4.170481e-002, -1.443579e-002, -2.656396e-002, 1.418197e-002, -2.744724e-003, 2.297212e-002, 2.412755e-002, -2.966290e-002, 5.015482e-003, 3.858185e-002, -3.008779e-002, 2.649736e-003, -3.396486e-002, -8.338460e-003, 1.316802e-002, -2.873067e-002, 8.487049e-003, 3.797751e-003, -4.104702e-002, -2.035434e-004, -1.154928e-003, 9.029252e-003, 5.541864e-002, -1.020250e-002, 8.283374e-003, 4.362714e-002, 2.065227e-002, 3.486485e-003, -1.853678e-002, -2.345380e-002, -5.706721e-003, 2.333005e-003, -7.383035e-003, 1.084346e-002, -1.174930e-002, 1.084346e-002, -7.383035e-003, 2.333005e-003, -2.233227e-002, -1.995396e-002, 6.629651e-002, -5.070254e-002, -3.873253e-002, -1.135296e-002, 8.414945e-003, 1.007325e-002, 2.217393e-002, -1.760429e-002, -1.322926e-002, -3.337743e-002, -3.799566e-002, -8.251150e-002, 5.851010e-004, -7.527120e-003, 2.282955e-002, 5.261611e-002, -1.076740e-002, 2.122186e-002, 1.234214e-001, -1.190833e-001, 1.637059e-002, 8.133461e-002, 6.678091e-003, -5.018721e-003, 4.614675e-003, -2.685136e-002, 2.378883e-002, -2.685136e-002, 4.614675e-003, -5.018721e-003, 3.887554e-002, -4.339356e-002, 5.938665e-002, 1.379481e-003, -3.373274e-002, -4.848311e-002, 4.066129e-002, 2.974535e-002, -1.111945e-002, 1.711865e-002, 3.428203e-003, 1.246963e-001, -3.894500e-002, -2.005601e-002, -2.979660e-002, 4.784340e-002, -8.380655e-002, -1.343136e-003, -4.019870e-002, -9.824031e-002, 5.389941e-002, -1.448991e-002, 2.478781e-002, 6.862140e-002, 2.337086e-003, -2.462981e-003, -2.762334e-002, 1.705443e-002, -5.748747e-002, 1.705443e-002, -2.762334e-002, -2.462981e-003, -1.576713e-002, 2.507462e-002, -3.264828e-002, -6.445652e-002, -7.224511e-002, -4.226905e-002, 5.189260e-002, 2.420934e-002, 2.822108e-003, 2.465881e-002, 2.704821e-002, -3.912227e-002, -1.196105e-002, 8.112183e-002, -2.816664e-002, 6.846165e-004, 4.755059e-002, -1.310350e-002, 3.951432e-002, 3.924416e-002, -4.254717e-002, -1.490011e-002, -3.596850e-002, 8.712086e-002, -3.574267e-003, -3.549771e-003, -1.975771e-003, 5.441840e-003, -2.468494e-002, 5.441840e-003, -1.975771e-003, -3.549771e-003, -7.506313e-003, -3.089042e-003, 2.543779e-002, -4.425439e-002, 7.369195e-002, -2.691328e-003, 1.026765e-002, 2.043458e-002, 2.676555e-002, -4.757609e-002, -3.732000e-002, -7.380099e-003, 4.488367e-002, -3.859083e-002, -6.059956e-003, -4.541580e-002, -2.885560e-002, 8.877992e-002, 1.785628e-002, 2.599423e-003, 9.813657e-002, 1.415540e-001, 1.523615e-002, 2.517990e-002, 7.427119e-003, -4.762594e-003, 2.737947e-002, -4.762594e-003, -1.541596e-002, 4.581266e-003, 4.046742e-002, 7.768460e-002, 2.673278e-002, -3.069401e-002, 1.085404e-001, -3.069401e-002, -4.480337e-002, -1.090973e-001, -2.236220e-002, -2.084306e-002, 7.010735e-004, 3.884426e-002, -4.761559e-002, 3.884426e-002, 2.857842e-002, 8.745968e-002, -1.255451e-002, 1.468882e-001, -2.991564e-002, 7.710868e-003, 1.001808e-002, 7.710868e-003, 2.391696e-002, 1.140127e-001, -1.462784e-001, -7.073045e-002, -8.621932e-003, 3.085558e-003, 1.830380e-002, 3.085558e-003, 5.676552e-002, -1.481714e-002, 7.981158e-002, 4.412630e-002, -3.124468e-002, 2.451736e-002, 2.537535e-003, 2.451736e-002, 1.312697e-001, 1.505610e-002, 2.883738e-001, -9.527654e-002, 2.126709e-003, -2.271546e-002, -7.263997e-002, -2.271546e-002, 9.623207e-003, 3.098964e-002, -1.427827e-001, -1.626239e-001, 3.376595e-002, 4.194889e-003, -3.113113e-002, 4.194889e-003, -7.834647e-002, -6.028037e-002, -1.194794e-001, 9.081465e-003, -1.863523e-002, 2.296921e-002, -6.391717e-002, 2.296921e-002, -1.004607e-001, 7.383155e-002, 3.703682e-002, -9.486257e-004, -2.628213e-002, -5.894944e-003, 7.327909e-002, -5.894944e-003, 1.269661e-002, 8.895018e-002, -7.724740e-002, -1.047755e-002, 5.727161e-002, -1.019068e-002, -6.004155e-002, -1.019068e-002, 1.075453e-001, -8.959423e-003, -2.044258e-002, -5.413735e-002, -9.214687e-003, -8.843019e-003, 2.336036e-002, -8.843019e-003, -2.668107e-001, 1.650302e-001, 1.080879e-001, 1.210565e-001, 2.725289e-003, 1.516311e-002, 4.963814e-002, 1.516311e-002, 5.062281e-002, 4.988016e-002, 1.241067e-001, -1.478355e-001, 4.452915e-002, -5.619371e-003, -2.461074e-001, -5.619371e-003, 1.079169e-002, -1.197440e-002, 6.896890e-002, 1.619375e-001, -

© ISO/IEC 2004 — All rights reserved


--`,,```,,,,````-`-`,,`,,`,`,,`---

Copyright International Organization for Standardization
Provided by IHS under license with ISO
No reproduction or networking permitted without license from IHS
Not for Resale

6.834958e-002, 1.364786e-002, -9.031386e-002, 1.364786e-002, -9.188566e-004, 4.683855e-002, -1.390500e-001, -4.517506e-004, 1.671839e-002, 6.842512e-003, 8.970216e-003, 6.842512e-003, -6.002441e-003, 4.270173e-002, -1.725048e-001, 7.915636e-002},
{-1.091921e-004, 2.517420e-003, -2.608605e-003, -3.416531e-003, -1.009799e-003, 4.140951e-004, -8.896390e-003, 1.555640e-003, 1.431382e-002, 1.555640e-003, -8.896390e-003, 4.140951e-004, -1.009799e-003, -3.416531e-003, -2.608605e-003, 2.517420e-003, 7.908303e-004, -9.781802e-003, -7.560761e-003, -1.661810e-002, 1.264222e-002, 2.450862e-002, -2.982829e-002, 1.846627e-002, 3.974459e-002, -5.041322e-003, 8.271581e-003, -6.063298e-003, -1.132019e-002, -1.544428e-002, -3.802613e-003, 9.768382e-003, -9.187056e-003, 1.363097e-002, 9.203356e-004, 1.902686e-003, 8.077556e-004, 8.347385e-003, -3.550740e-002, 2.029687e-002, 1.325668e-002, -2.024681e-002, -3.769945e-002, 1.776968e-002, 2.530566e-003, 7.732149e-004, -6.975043e-003, -1.143177e-002, -6.941460e-003, -1.382358e-002, -1.477827e-002, -2.466462e-002, 3.620625e-003, 2.003917e-003, 1.287578e-002, 6.830981e-003, 3.643825e-002, -7.876119e-003, 2.214909e-002, 2.873697e-002, 1.120164e-002, -1.859220e-002, -2.481414e-002, 1.470878e-002, -8.649374e-003, -1.576781e-002, 5.059371e-003, -6.821952e-003, 1.806857e-003, 2.980756e-002, 2.824732e-002, -2.184996e-002, -1.559600e-002, 3.387047e-002, 1.916142e-002, 3.543809e-002, -1.716944e-002, 6.014778e-003, -1.093811e-002, -2.185832e-003, 9.108542e-003, -1.549775e-003, 2.580475e-002, 3.463609e-003, -1.953063e-002, 2.683085e-002, 4.250197e-002, -8.982403e-003, 8.062247e-003, -2.388168e-002, 3.822240e-003, -1.722601e-002, -5.031270e-002, 1.623922e-002, -1.417559e-002, -4.397428e-002, 2.938202e-002, -5.043221e-002, 2.833754e-002, -2.418032e-002, -2.870617e-002, -4.934248e-003, 1.145950e-002, 9.482930e-003, 5.648431e-002, 4.002686e-002, -9.301436e-003, -2.268823e-003, -3.481703e-002, -6.133412e-003, 2.269335e-002, -2.152811e-002, -1.346544e-002, 2.909278e-002, 1.847788e-003, -1.605068e-002, -3.696789e-003, -3.142841e-003, -3.533652e-002, 1.229875e-002, -3.385870e-002, 5.034764e-003, -2.614953e-002, -3.618869e-002, -4.062559e-002, -1.760104e-002, -2.258000e-002, 2.553458e-002, -9.390045e-004, -6.088717e-005, 3.703379e-003, -3.825672e-003, -1.092993e-003, -3.825672e-003, 3.703379e-003, -6.088717e-005, -1.350911e-002, -1.670838e-002, -5.338779e-002, 8.726293e-003, -2.849657e-002, 3.655119e-002, 1.697102e-002, -1.917057e-002, 1.325034e-002, 2.656377e-002, -3.146251e-002, -3.727780e-002, 7.570409e-002, -4.220199e-002, 8.919588e-002, -1.348275e-004, -3.415328e-002, 4.662160e-002, 5.339974e-002, 1.072830e-003, 5.160587e-002, 6.638829e-002, 7.934133e-002, 4.035686e-002, -9.196636e-005, 2.751667e-003, -2.346993e-002, 3.781043e-002, -1.850671e-002, 3.781043e-002, -2.346993e-002, 2.751667e-003, 4.100230e-002, 1.340135e-002, 5.328891e-002, 7.012575e-003, -1.996412e-002, 8.501292e-003, -5.760199e-002, 2.537847e-002, 7.911943e-003, -8.643783e-002, 1.234041e-001, 7.938472e-003, 9.513505e-002, -6.914265e-002, -3.641992e-002, -9.714068e-002, 1.734598e-002, -1.306759e-001, 6.064367e-002, -3.990769e-002, -3.058987e-003, -2.403319e-002, 2.612651e-002, 4.222881e-002, -1.248652e-003, 8.566181e-003, -9.924678e-003, 8.558257e-003, 8.089175e-003, 8.558257e-003, -9.924678e-003, 8.566181e-003, 1.919027e-002, 4.309654e-002, 6.095939e-002, -1.171430e-002, -4.632125e-002, -5.450615e-002, 3.170388e-002, -3.909834e-002, -3.247817e-002, -3.146010e-002, -5.771169e-002, -4.711013e-002, -8.173670e-002, 1.494551e-002, -6.492175e-004, 1.661995e-002, 6.824896e-002, -7.257656e-002, -3.487312e-002, -8.677278e-003, -7.656764e-002, -1.113563e-002, 6.637654e-002, 1.170361e-002, 2.170430e-003, 6.649945e-003, 4.553820e-003, -9.788458e-003, -1.114923e-002, -9.788458e-003, 4.553820e-003, 6.649945e-003, 3.176111e-002, 1.552317e-002, -3.013754e-002, -1.104263e-002, 5.677377e-002, -1.489791e-002, 6.299224e-003, 2.026099e-002, 4.474545e-002, -1.545497e-002, -2.925603e-002, 5.280622e-002, -6.352851e-002, 1.188684e-002, -1.777808e-002, 2.847643e-002, -1.949868e-002, 2.977015e-004, 4.843805e-002, -1.171680e-002, -4.245855e-002, 1.545658e-002, 3.650988e-002, -1.546311e-002, -1.489654e-002, -4.148776e-003, -1.106594e-002, -4.148776e-003, -4.770188e-002, 3.791984e-002, -1.885574e-001, 4.469182e-002, 3.658135e-003, -5.164818e-002, 1.353178e-003, -5.164818e-002, 8.556106e-002, 4.589443e-002, -3.018344e-003, -6.744386e-002, 3.634685e-002, 5.211027e-002, -2.360147e-001, 5.211027e-002, -7.314453e-002, -5.906287e-002, -3.190587e-002, -5.218697e-002, -1.404892e-002, 8.705507e-003, -8.846901e-002, 8.705507e-003, 9.996225e-002, -7.333690e-002, 2.045955e-001, 1.310032e-001, 4.590853e-002, -1.472793e-003, -1.339054e-002, -1.472793e-003, 6.624898e-003, 1.060435e-001, -4.060355e-002, 6.961048e-002, -3.560912e-002, 2.421732e-002, -5.158208e-002, 2.421732e-002, -1.029031e-001, 2.489346e-002, 1.036590e-002, 8.246333e-002, -2.984581e-002, -9.256633e-003, 7.176323e-002, -9.256633e-003, -5.152032e-002, -4.788581e-002, 3.250111e-001, -3.398374e-002, 7.455913e-003, 2.258907e-002, -8.746976e-002, 2.258907e-002, 1.186839e-001, -7.382267e-002, 3.091129e-002, 5.985681e-002, -6.180211e-002, 2.619311e-003, -1.778440e-002, 2.619311e-003, -3.308995e-002, -2.414179e-002, 3.567313e-002, 8.211001e-003, 1.529808e-005, -2.742852e-004, -3.426631e-002, -2.742852e-004, 1.189905e-001, -4.396043e-002, 8.665376e-002, 1.044238e-001, 1.761619e-002, 1.028900e-002, 3.160223e-002, 1.028900e-002, -6.175233e-002, -4.598124e-002, -1.626317e-002, -2.939664e-002, 1.149322e-002, -2.307836e-002, 1.280172e-001, -2.307836e-002, -3.591360e-002, 2.124874e-002, 7.636930e-002, 1.026023e-001, 2.728329e-002, 1.114641e-002, -3.202179e-002, 1.114641e-002, 2.425314e-002, 8.347527e-002, 7.449466e-002, -3.100859e-002, 3.325487e-002, 3.584449e-002, 2.014746e-002, 3.584449e-002, 9.689765e-002, -2.480975e-002, -1.657632e-001, 4.206208e-002, -


© ISO/IEC 2004 — All rights reserved

Copyright International Organization for Standardization
Provided by IHS under license with ISO
No reproduction or networking permitted without license from IHS
Not for Resale

7.823605e-003, -2.077283e-002, -3.352401e-002, -2.077283e-002, -1.070936e-001, -7.936521e-002, -2.391401e-001, -2.573959e-003, -1.911537e-002, 4.957040e-003, -4.442003e-002, 4.957040e-003, -2.656701e-001, 1.310526e-001, 2.610291e-002, 1.123918e-001},
{-2.978445e-004, -1.701324e-004, 5.647417e-003, -9.811343e-004, 3.612722e-003, -7.196340e-003, -5.777412e-003, 6.457158e-003, 4.104354e-003, 6.457158e-003, -5.777412e-003, -7.196340e-003, 3.612722e-003, -9.811343e-004, 5.647417e-003, -1.701324e-004, -4.339048e-003, -4.271449e-003, -5.375976e-003, -5.562090e-003, -4.184488e-004, -3.497103e-003, 8.454220e-003, -7.533218e-003, 1.467091e-002, -4.173739e-003, 8.445718e-003, 1.074988e-002, 1.047044e-002, -2.583920e-003, 1.239127e-002, -4.026818e-003, -1.775322e-002, 4.378047e-004, 5.064334e-003, 3.195395e-003, 9.699397e-004, 1.338571e-002, -2.064910e-002, 1.587562e-002, 5.154060e-002, -3.712818e-002, 1.170556e-003, 1.853081e-002, -7.627361e-003, -6.185459e-003, 9.378806e-003, 2.016030e-002, 1.244623e-002, 1.328082e-002, -1.442234e-002, 5.599868e-003, 1.306837e-002, 5.501930e-003, 3.076961e-002, 2.616012e-002, -2.275283e-002, -1.372556e-002, 8.512541e-003, 1.663732e-003, 1.543305e-002, 1.399042e-002, -2.115443e-003, -3.296058e-003, -3.996516e-003, -2.718489e-002, 4.401489e-003, -1.477422e-002, 2.895669e-002, -6.969336e-004, -1.587191e-002, 2.589491e-002, -4.048913e-002, -4.453980e-003, -5.666384e-002, -1.284132e-002, -2.322958e-002, -1.290306e-003, -8.124795e-003, -4.126792e-003, 8.205028e-003, -1.950124e-002, -1.939067e-003, -2.079805e-002, -1.798636e-002, 1.740685e-002, -2.894325e-002, -6.051173e-002, -1.094142e-002, -1.276450e-002, -1.491601e-002, -1.530181e-003, -1.979810e-002, 1.803053e-002, 9.532802e-003, 1.782169e-002, -6.665811e-003, -3.071641e-004, 1.545395e-002, 2.813845e-002, -4.317009e-002, -5.764213e-004, -2.153229e-002, -1.803597e-002, -2.485159e-002, -1.783807e-003, -1.416670e-002, 2.237600e-002, -5.324786e-002, 1.340697e-002, -1.764187e-002, -7.381761e-003, 3.175051e-003, 3.696514e-003, -3.343473e-003, 2.211780e-002, 3.724420e-002, -6.409747e-003, 6.408695e-003, 5.516209e-003, 4.299283e-002, -1.009601e-002, 8.459880e-003, -1.617994e-002, 2.970403e-002, 1.763400e-002, -5.378977e-003, 2.329615e-002, 1.798108e-003, 1.485401e-003, -1.965270e-002, 3.417278e-002, -7.023400e-003, 3.417278e-002, -1.965270e-002, 1.485401e-003, 2.230023e-002, -3.937130e-002, -2.514074e-002, -5.091818e-002, -3.009567e-002, -2.922504e-002, 1.974690e-002, 3.650655e-002, -2.867688e-002, -3.800732e-003, -5.154056e-002, -3.503784e-002, -4.818705e-002, 1.026850e-001, -3.274568e-003, 5.936740e-002, -6.019939e-002, 6.014043e-003, 9.717654e-005, -1.533509e-002, -6.230035e-002, -3.220715e-003, -3.119400e-003, -6.066103e-002, -6.804618e-003, 4.859319e-003, -7.467170e-003, -5.709638e-003, 5.924028e-003, -5.709638e-003, -7.467170e-003, 4.859319e-003, 1.357382e-002, 2.644908e-002, -3.771020e-003, -7.648334e-002, -3.754627e-002, 1.817511e-002, -3.845352e-003, -2.147367e-002, 2.049034e-003, -1.157649e-002, 4.291261e-002, 7.749923e-002, 7.740234e-002, -1.229347e-002, -4.802856e-002, 6.871444e-002, 2.998355e-002, -6.884928e-002, -2.350417e-002, 2.006849e-002, -2.976916e-002, -3.923555e-002, 5.197989e-002, 8.413764e-002, 3.581270e-004, -1.036289e-002, -5.407471e-003, 4.173329e-003, -1.378756e-002, 4.173329e-003, -5.407471e-003, -1.036289e-002, 1.766106e-002, 3.677762e-003, 6.699859e-003, -2.337698e-002, 5.428805e-003, -7.836655e-003, -1.512263e-002, -1.981451e-003, 2.072632e-003, 8.085065e-002, 1.083787e-002, 7.836479e-002, 3.265996e-002, -1.907919e-003, 2.148740e-002, -6.275437e-002, 2.853924e-002, -2.690152e-005, 5.133598e-002, -4.114830e-002, -9.963264e-002, -3.867566e-002, 6.916222e-002, 4.517191e-002, 4.350539e-003, -9.005594e-003, -6.432487e-003, 9.964708e-004, -3.433292e-002, 9.964708e-004, -6.432487e-003, -9.005594e-003, 1.273619e-002, -8.877877e-003, -5.337448e-003, 5.885268e-002, -4.446966e-002, -2.733547e-002, -5.995126e-002, -3.550631e-002, -2.556789e-002, 2.897405e-002, -1.337734e-002, 7.727555e-002, 1.011565e-001, 7.187696e-002, -1.015171e-002, 1.161882e-002, -4.851306e-003, -4.599502e-002, 2.418591e-002, 1.312577e-002, 6.501140e-002, 2.116365e-002, 1.855818e-002, -1.145693e-001, -3.040448e-004, -1.596900e-002, 4.245805e-002, -1.596900e-002, 3.255321e-002, 4.941432e-002, 1.495226e-001, 9.278068e-002, -1.500908e-002, -5.466880e-003, 5.380873e-002, -5.466880e-003, 1.454385e-002, 6.582214e-002, -4.428669e-002, -3.116308e-001, 1.620927e-002, -3.757753e-002, 1.019631e-001, -3.757753e-002, -3.865204e-002, 1.341430e-002, -2.831100e-002, -2.656753e-002, -1.031575e-003, -7.342248e-003, 1.112189e-001, -7.342248e-003, -6.784137e-002, 2.841133e-002, 2.058660e-001, -4.931478e-002, 2.087561e-002, 2.518897e-002, 2.739303e-002, 2.518897e-002, 1.364798e-002, 6.690247e-002, -6.516623e-002, -4.778615e-003, -3.764381e-003, 1.794931e-002, -1.907316e-001, 1.794931e-002, -3.353580e-002, 1.808008e-002, 2.780323e-001, 3.947031e-002, 3.191839e-002, 1.201624e-003, -1.772863e-001, 1.201624e-003, -2.404870e-002, -1.088094e-002, -2.075664e-002, 1.661502e-001, -5.390071e-002, 1.912589e-002, 2.679483e-003, 1.912589e-002, -1.094119e-001, 7.150129e-002, -3.012891e-002, 4.032829e-003, -1.219257e-002, 1.186285e-002, -1.516741e-002, 1.186285e-002, -4.239011e-002, 2.053209e-001, 2.730501e-002, 3.194178e-002, -6.302738e-003, -2.298450e-003, -2.487855e-002, -2.298450e-003, -6.291776e-003, -8.840934e-002, -8.941667e-002, 2.949230e-002, -8.492131e-003, 3.209394e-002, -8.310991e-002, 3.209394e-002, -1.876089e-001, 7.633564e-003, 3.790860e-003, 1.309858e-001, 5.690068e-002, 8.045559e-003, 7.241275e-002, 8.045559e-003, 2.735797e-002, -2.711151e-001, 8.993021e-002, 1.199106e-001, -1.696928e-002, -6.303858e-003, 4.732995e-003, -6.303858e-003, 1.329313e-002, -6.976363e-002, 1.250311e-002, 6.676593e-002, 3.582271e-002, -2.996217e-004, 9.740837e-002, -2.996217e-004, 1.657192e-002, 2.574548e-002, 9.251830e-002, -9.191754e-002, -

© ISO/IEC 2004 — All rights reserved


Copyright International Organization for Standardization
Provided by IHS under license with ISO
No reproduction or networking permitted without license from IHS
Not for Resale

4.315728e-002, 9.043812e-003, 7.630844e-002, 9.043812e-003, 4.097045e-002, 7.135155e-002, -1.851815e-001, 6.550859e-003, -9.007378e-004, -1.534172e-002, 1.299867e-002, -1.534172e-002, 3.119037e-002, 5.437813e-002, -5.328861e-002, -6.235255e-002},
{1.447803e-004, 1.037597e-003, 4.665611e-003, 2.432376e-003, 1.392219e-002, -5.165822e-003, -3.468521e-003, 5.287874e-004, 6.727337e-003, 5.287874e-004, -3.468521e-003, -5.165822e-003, 1.392219e-002, 2.432376e-003, 4.665611e-003, 1.037597e-003, 7.278118e-003, 2.895494e-003, -8.613280e-003, -9.645539e-003, -3.879585e-003, -1.232825e-002, 7.888257e-003, 2.691482e-002, -6.345263e-003, 2.772056e-002, 1.124320e-002, -1.773860e-002, 1.125175e-002, 2.294641e-003, 4.112485e-003, -4.403839e-003, -1.362952e-002, 8.566845e-004, 1.421501e-002, -8.257480e-003, 2.089773e-003, 1.897420e-002, -1.870856e-002, 2.652456e-002, 2.969709e-002, 1.175050e-002, 1.102694e-003, 1.719029e-002, 8.111002e-003, -5.895844e-003, 2.629615e-002, 1.480416e-002, -5.042201e-003, 2.127384e-003, -9.735893e-003, 7.895837e-003, 3.016442e-002, -1.066539e-002, 1.475943e-002, -1.154608e-002, -8.419734e-003, -1.513783e-002, 5.788829e-003, 1.168461e-002, 1.379586e-002, 1.546820e-002, -9.452015e-003, 5.385934e-003, -2.184637e-003, -4.785590e-002, 2.967146e-003, 5.212489e-003, 4.544174e-003, 2.980784e-002, 3.095171e-003, 3.243140e-003, -1.517843e-003, -3.503714e-002, 5.787179e-004, -1.046377e-002, -9.769710e-003, 3.164099e-003, 1.981074e-002, -3.463620e-003, 6.756294e-004, -4.686418e-003, -7.000633e-003, 2.738906e-002, 3.704652e-003, -9.597672e-003, 2.807069e-002, 8.989628e-003, -1.476059e-002, -3.137516e-002, 5.141128e-002, 4.426393e-003, -1.272296e-002, 2.047671e-002, 1.198673e-002, -3.612328e-003, 1.795213e-003, -2.346652e-002, -5.509558e-002, 1.695892e-003, 1.398143e-002, -5.270876e-002, -8.903405e-003, 4.662799e-003, 2.992927e-002, 5.963775e-003, -5.028999e-003, 2.615789e-002, -3.702367e-002, 1.296635e-002, -6.279409e-003, 9.957259e-003, -4.858083e-003, 1.648375e-002, 1.840158e-003, 9.389276e-003, -3.073876e-002, 3.707064e-002, 1.264561e-002, 3.775612e-002, 3.776937e-002, 8.035643e-003, 2.208240e-002, 3.155813e-002, -4.870371e-002, -2.042813e-002, -2.858235e-002, -5.193269e-003, 5.355909e-003, -6.227151e-003, 1.680973e-003, -5.818066e-004, 4.915025e-002, -5.818066e-004, 1.680973e-003, -6.227151e-003, 1.216366e-002, -2.558813e-002, 3.807439e-002, 3.350672e-002, -4.229231e-002, 6.448377e-002, 3.577862e-004, -9.031116e-003, -3.924402e-002, -4.397879e-002, 7.095191e-002, -2.154849e-002, 9.166114e-002, 6.065350e-002, -3.856723e-002, -1.329445e-002, 3.953758e-002, -1.964213e-003, 4.687319e-002, 6.659534e-002, 2.794346e-002, 2.063194e-002, 4.445516e-002, 5.771275e-002, 7.436182e-003, -9.095993e-003, 7.541554e-003, 1.012079e-002, 4.483818e-002, 1.012079e-002, 7.541554e-003, -9.095993e-003, 2.267964e-003, 9.817638e-003, -1.201442e-002, 9.447538e-003, 3.148699e-002, -2.933830e-002, 3.100531e-002, -5.220832e-003, 1.588517e-003, 8.225837e-002, -6.873470e-002, -3.461268e-002, 4.295419e-002, 1.343415e-002, -6.191703e-003, -2.387504e-002, -1.164557e-003, 7.725343e-002, -4.688550e-002, 1.357923e-001, 3.765048e-002, 4.598077e-002, -8.196398e-003, -3.369695e-002, -5.085400e-003, -5.255299e-003, -9.580690e-004, 1.194982e-002, -1.622991e-002, 1.194982e-002, -9.580690e-004, -5.255299e-003, 7.323045e-003, -3.818128e-002, 2.951995e-002, 5.258321e-004, -4.948859e-003, -2.839363e-002, -6.399313e-002, 9.069713e-003, 2.755089e-002, 4.753804e-002, -2.756916e-002, -1.368147e-001, 3.763815e-002, -4.010604e-002, 7.010605e-002, 6.592854e-003, -3.218364e-002, 5.634914e-003, -5.062431e-002, -7.046933e-002, -3.384463e-002, 1.577722e-002, -6.683107e-002, 2.440202e-003, -7.561910e-003, -7.426291e-003, -3.319834e-002, 8.768021e-003, 6.610735e-003, 8.768021e-003, -3.319834e-002, -7.426291e-003, -1.837952e-002, -2.270878e-002, -3.376409e-002, -9.696162e-003, 1.967863e-002, 4.869889e-002, -5.218846e-002, -2.110641e-002, 5.215117e-004, 5.481501e-004, -7.505297e-002, -4.699165e-002, -4.213326e-002, -4.478954e-002, 6.501865e-003, -2.604331e-002, -4.065708e-002, 4.136869e-002, 6.056254e-003, -8.595276e-002, -4.018118e-002, 1.669886e-003, -1.684771e-002, 4.802928e-002, -7.833084e-003, -2.423661e-002, -4.829707e-002, -2.423661e-002, 5.378862e-003, 9.342118e-002, -1.173911e-001, -1.722834e-001, 2.414558e-002, 6.435356e-002, -1.948095e-001, 6.435356e-002, 2.016240e-002, 5.439571e-002, -5.669908e-002, -2.729736e-001, -2.711982e-002, -6.335356e-002, 1.895305e-001, -6.335356e-002, 6.119519e-002, -1.860049e-002, 4.072748e-002, -1.248060e-001, 1.179921e-002, -2.097040e-002, -2.524474e-002, -2.097040e-002, 5.393040e-003, -9.396625e-002, -1.324811e-001, 3.768358e-002, 1.653435e-002, -1.038488e-003, -7.592380e-002, -1.038488e-003, 7.589278e-002, -3.510238e-002, -7.968136e-002, 1.043536e-001, -2.749094e-002, 1.675001e-002, 7.567340e-002, 1.675001e-002, 4.196820e-002, -7.405405e-002, -2.749766e-001, -3.529009e-003, 2.252264e-002, -2.092273e-002, 1.218990e-001, -2.092273e-002, -2.031173e-002, -4.519480e-002, -1.309909e-001, -5.002171e-002, 2.341496e-004, 1.489786e-002, -1.032913e-001, 1.489786e-002, -5.111860e-004, 9.872213e-002, -1.311244e-001, -1.602465e-002, -4.482973e-003, -1.107723e-002, -8.054595e-003, -1.107723e-002, -1.011792e-001, 1.479940e-001, 7.976560e-002, -9.392455e-002, -1.991416e-002, 1.336809e-002, -8.956906e-002, 1.336809e-002, -8.342930e-002, 5.722094e-002, -3.852809e-002, 1.548055e-001, 2.062252e-002, -4.600556e-002, 1.073362e-001, -4.600556e-002, 4.286312e-002, 8.733489e-002, -5.825439e-002, -7.753241e-002, -1.147284e-002, 2.265869e-002, 8.021040e-003, 2.265869e-002, 1.292688e-001, 3.072046e-002, -7.423278e-003, 8.957518e-002, 3.441985e-003, 1.263620e-002, 3.080391e-002, 1.263620e-002, 8.132439e-003, 1.263013e-001, -7.160939e-004, -1.262750e-001, 1.586975e-002, 2.052287e-002, 1.970898e-002, 2.052287e-002, -5.420590e-002, 3.641381e-002, -1.194876e-001, -9.437376e-002, -


© ISO/IEC 2004 — All rights reserved

Copyright International Organization for Standardization
Provided by IHS under license with ISO
No reproduction or networking permitted without license from IHS
Not for Resale

3.391013e-002, -3.424617e-003, -1.226271e-001, -3.424617e-003, 1.321043e-002, 1.758676e-001, 1.172949e-001, 2.806545e-002, 1.719853e-002, 2.320981e-002, 3.960233e-002, 2.320981e-002, 5.881131e-002, 2.944202e-002, 4.803614e-002, 3.510150e-002}, {2.177532e-004, -1.385042e-004, -8.960613e-004, 3.785367e-003, 2.612169e-003, -5.470179e-003, 3.054393e-003, 1.483504e-003, -1.151112e-002, 1.483504e-003, 3.054393e-003, -5.470179e-003, 2.612169e-003, 3.785367e-003, -8.960613e-004, -1.385042e-004, -2.323197e-004, 3.812677e-003, 8.138706e-003, -3.807133e-003, -5.515352e-004, 2.378475e-002, -9.900612e-003, 4.021797e-003, 5.783023e-003, 5.198398e-003, -9.073029e-003, 6.739394e-003, -4.417156e-003, -2.119633e-003, 8.410421e-004, -2.751283e-003, -1.183883e-002, 1.031080e-003, 5.402442e-003, 8.637941e-003, -4.772440e-003, -7.189006e-003, 8.950696e-003, 9.035152e-003, -5.885871e-003, -6.697087e-004, -1.525817e-002, 8.495151e-003, 1.762325e-002, 1.608976e-002, 6.785917e-003, -3.609478e-003, -3.397187e-003, 2.510050e-002, -2.092815e-002, -1.657500e-002, 1.371056e-002, -2.623016e-003, 1.025449e-002, -1.116935e-002, -1.769767e-002, 2.729199e-003, 6.628750e-004, -1.216636e-002, -1.833530e-002, 1.829850e-003, -1.554616e-002, 1.848997e-002, -1.419982e-002, 1.081850e-002, 2.035368e-003, -1.527121e-002, 2.706260e-002, -3.592279e-002, 1.368107e-002, -1.921703e-002, -3.144695e-002, -1.244467e-002, -1.358295e-002, -1.014539e-002, -2.532484e-002, -1.835794e-002, 2.324603e-002, -9.994035e-003, 9.288863e-003, 2.426233e-002, 1.878558e-002, 1.192598e-002, 4.579439e-002, 1.965475e-002, -3.450436e-002, 4.099327e-002, -3.601638e-003, 9.993890e-003, 1.257297e-003, -1.716717e-002, 4.447190e-003, -1.070659e-002, -3.362936e-003, -1.048625e-002, 1.450702e-002, 1.851305e-002, 1.495442e-002, 3.340833e-002, 1.636703e-002, -2.718118e-002, 1.016222e-002, 1.004459e-002, -2.444347e-002, 2.129279e-002, 2.201588e-002, 2.444470e-002, 2.580428e-002, 2.771192e-002, 1.341818e-002, 1.387091e-002, 7.097869e-003, -2.722570e-002, 1.373694e-002, -3.393545e-002, 9.503258e-003, -3.108457e-002, -2.815829e-002, -7.992079e-003, -4.721815e-002, 4.669874e-002, -3.255864e-002, -3.308487e-002, -6.936207e-003, -1.588561e-002, 9.762420e-003, -3.934163e-002, 8.661090e-004, -1.946141e-003, 1.530268e-002, -1.130087e-002, 1.892207e-002, -1.130087e-002, 1.530268e-002, -1.946141e-003, -6.983058e-003, -3.600258e-002, 6.795934e-002, 2.020887e-002, 2.549513e-002, -1.823425e-002, 3.345351e-003, -7.710894e-004, -2.867466e-002, 3.203816e-003, -8.254481e-002, 1.709453e-002, 7.401444e-002, 2.313176e-002, -3.336046e-002, -3.349784e-002, -3.358602e-002, -4.645421e-002, -5.074719e-002, -4.323855e-002, -2.241441e-001, 5.379466e-002, 4.125685e-002, -2.902089e-002, 2.690972e-004, 5.853015e-003, 9.499931e-003, -3.038429e-003, 2.022818e-002, -3.038429e-003, 9.499931e-003, 5.853015e-003, 1.650024e-002, 8.026445e-003, 8.951017e-004, 5.695649e-002, -7.252225e-002, 7.462366e-002, 4.325369e-003, -1.227047e-003, 5.349341e-003, -1.087361e-002, -1.100325e-001, 6.494404e-002, 6.677460e-002, 4.469954e-002, -3.592720e-002, -3.348662e-002, -1.001902e-003, 3.810287e-003, 6.697023e-002, 5.902010e-002, -1.952725e-003, -6.212614e-002, -2.746035e-002, 1.448958e-002, 1.577160e-003, 2.433617e-003, -8.956785e-003, -9.256918e-004, 1.981277e-002, -9.256918e-004, -8.956785e-003, 2.433617e-003, 1.774571e-003, -1.604900e-002, -1.498604e-002, 1.590818e-002, 7.068349e-003, -8.650734e-004, 3.334977e-002, -1.442106e-002, 1.258516e-002, -2.479756e-004, -1.462870e-002, 1.787681e-002, 6.001077e-002, -7.113498e-002, -1.217898e-003, -4.031840e-002, -1.500947e-002, 1.408165e-002, -8.093189e-002, -2.993173e-002, -6.753887e-002, 2.426122e-002, -2.660866e-002, 9.812277e-003, -2.494613e-003, -2.742167e-003, -1.685242e-002, 8.219681e-003, 1.495984e-002, 8.219681e-003, -1.685242e-002, -2.742167e-003, 2.342187e-002, -3.988664e-004, -3.902850e-002, 1.037325e-001, -5.623273e-003, 4.242044e-003, 4.541727e-004, 4.313752e-002, 3.380172e-002, -5.181421e-002, -2.318867e-002, 5.810816e-003, -8.015474e-002, -6.471218e-004, -4.862506e-002, -1.145255e-002, 1.875425e-002, 6.942178e-002, -8.493369e-002, 3.977190e-003, 5.612319e-002, -7.093938e-002, -5.215430e-002, -3.290046e-002, -3.818000e-003, -2.524456e-002, 4.404304e-002, -2.524456e-002, 1.176342e-001, -5.986195e-002, 6.294308e-004, 2.297696e-003, -1.177462e-003, -4.482409e-002, 1.979139e-001, -4.482409e-002, -4.705171e-002, 2.637945e-001, 5.501385e-002, 7.582721e-002, -1.107344e-003, -1.624597e-002, -2.047739e-001, -1.624597e-002, 8.560838e-002, -2.434351e-001, -7.227840e-002, -3.486340e-002, 1.093665e-002, -4.500388e-002, 6.623503e-002, -4.500388e-002, -2.514617e-002, -8.633765e-002, 6.781376e-002, -4.568876e-002, 1.403028e-002, -2.326334e-003, -1.719419e-002, -2.326334e-003, 3.944535e-002, -1.655226e-002, -6.331823e-002, -5.413599e-002, -8.168711e-003, 1.299716e-002, 1.566382e-002, 1.299716e-002, 1.362365e-002, -7.837522e-002, 6.056901e-002, 9.450053e-002, -5.128094e-003, 1.324103e-002, -4.530904e-002, 1.324103e-002, 4.040991e-002, 6.045304e-002, -4.934487e-002, 5.290190e-002, -4.432115e-003, -1.758268e-002, -7.142845e-002, -1.758268e-002, -3.413167e-002, -5.438980e-003, -7.165177e-002, -1.273247e-002, -6.551146e-003, 3.137896e-003, 9.747210e-003, 3.137896e-003, 1.454792e-002, 1.126620e-001, -5.089857e-002, -6.078215e-002, -1.077486e-002, 7.230792e-003, -3.917875e-002, 7.230792e-003, -8.488804e-002, 1.357248e-001, 2.366751e-001, 8.633251e-002, -3.438848e-002, -2.058568e-002, -1.309452e-001, -2.058568e-002, 2.431548e-002, 1.258176e-002, 1.839612e-001, 1.881014e-002, 1.850086e-002, 4.993777e-002, -5.365271e-002, 4.993777e-002, -4.180291e-002, 3.692891e-002, 1.700705e-002, 1.558240e-001, -1.516582e-004, 1.370919e-002, -8.029810e-002, 1.370919e-002, -2.333360e-002, -7.429083e-002, 9.335569e-003, 1.465814e-001, 1.905482e-002, -3.447273e-002, 1.570608e-001, -3.447273e-002, -5.399126e-002, 2.548685e-002, -1.250881e-001, -2.878477e-002,

© ISO/IEC 2004 — All rights reserved


--`,,```,,,,````-`-`,,`,,`,`,,`---

Copyright International Organization for Standardization
Provided by IHS under license with ISO
No reproduction or networking permitted without license from IHS
Not for Resale

2.260691e-002, 1.295057e-002, 1.942291e-001, 1.295057e-002, 2.563435e-003, 6.251575e-002, 8.473543e-002, 1.814824e-001, -9.213896e-003, -9.450978e-003, -3.178217e-002, -9.450978e-003, -1.112685e-001, 8.173502e-002, 1.103170e-001, -6.678546e-002},
{-1.562822e-004, -1.209699e-003, 1.423311e-004, 8.759394e-004, -3.002561e-003, 8.457258e-003, 8.521668e-004, -3.626601e-003, -4.185306e-003, -3.626601e-003, 8.521668e-004, 8.457258e-003, -3.002561e-003, 8.759394e-004, 1.423311e-004, -1.209699e-003, 1.182240e-004, -1.305956e-002, -1.111360e-002, 7.762752e-003, 1.002376e-003, -2.784384e-002, -2.215566e-003, -8.543966e-004, 1.272852e-002, 9.250932e-003, 3.740807e-003, 6.677913e-003, -5.657660e-003, 4.562561e-003, 7.144066e-003, -2.974935e-005, -6.402946e-003, 1.018305e-002, 4.383759e-003, 9.355545e-003, -5.095140e-003, 1.928733e-002, -7.909556e-003, 3.094584e-003, -1.279646e-002, 1.680938e-002, 1.889034e-002, 2.082816e-002, -3.909067e-003, -4.456895e-004, 8.085181e-003, 1.868791e-002, -9.651878e-004, -9.429810e-003, 2.880688e-003, -1.134278e-002, -1.128321e-002, 1.282951e-002, 1.088077e-002, 2.804594e-002, 6.419899e-003, 1.230537e-002, -1.239522e-002, -5.240233e-003, -2.322820e-002, 9.855812e-003, 2.310799e-002, -1.437014e-002, 3.171461e-002, -6.933406e-003, 3.957094e-003, -1.044602e-002, 9.379981e-003, -1.184096e-002, 8.716039e-003, 4.409117e-003, 9.545182e-003, 9.383852e-003, -1.364257e-002, -3.953498e-002, -3.034658e-002, -1.436106e-002, 6.960917e-003, -1.088324e-002, 2.425226e-002, -1.022704e-002, 4.660563e-003, -3.840171e-003, -3.215384e-002, -1.443854e-003, -3.686287e-003, -1.095795e-002, 3.196188e-002, 4.770861e-002, 1.268282e-002, -1.808163e-002, -4.788072e-003, 1.221577e-002, 3.202248e-002, 3.292313e-003, 2.265456e-002, 2.962661e-002, -7.681010e-003, 8.941721e-004, -5.333880e-003, 1.312315e-002, 2.888072e-002, -1.100252e-002, -9.711573e-003, 5.883904e-004, 8.466839e-003, 3.284061e-002, -3.124526e-003, -1.102355e-002, -6.772981e-003, 1.300210e-002, 1.292323e-002, -9.357304e-003, -4.063426e-003, -3.912512e-002, -6.643398e-004, -3.129526e-002, 2.955190e-002, 1.459564e-002, -5.770121e-003, 1.258886e-002, 2.948160e-002, -2.091100e-002, 1.274565e-002, 7.928361e-003, -8.589806e-003, 6.177910e-003, 1.210329e-002, 4.937203e-003, -1.001615e-002, 1.582169e-002, 7.249218e-002, 1.582169e-002, -1.001615e-002, 4.937203e-003, 6.865343e-003, 3.889033e-003, 5.518418e-002, -2.235759e-002, 9.520815e-003, 6.282972e-003, -2.649666e-002, -1.170864e-002, -5.343618e-002, 5.753426e-002, 3.176389e-002, 3.342631e-002, -3.848779e-002, -1.711234e-002, 9.183548e-003, -3.611464e-002, -3.012962e-002, -3.994557e-003, -1.633466e-002, -8.211628e-002, 5.787471e-002, 8.444805e-002, -5.506022e-002, -7.246994e-002, -2.384860e-003, -4.368211e-004, -1.600096e-002, 1.753664e-002, -1.762521e-002, 1.753664e-002, -1.600096e-002, -4.368211e-004, -7.126279e-003, -3.233970e-002, -6.720894e-002, -1.506466e-002, -2.556525e-002, 2.997589e-002, 1.421342e-002, -1.389961e-002, 5.547733e-003, -6.873163e-002, -1.268630e-002, 2.102384e-002, 1.133111e-001, -2.508563e-002, 2.807272e-002, -8.656550e-003, 1.463255e-002, 2.549844e-002, 1.234043e-001, 2.870341e-002, -4.667531e-002, -9.280392e-002, -5.868504e-003, -7.016149e-002, -6.857948e-003, -6.018090e-003, 3.127649e-003, -3.110536e-002, 6.376812e-002, -3.110536e-002, 3.127649e-003, -6.018090e-003, -1.838287e-002, 1.374696e-002, 1.417606e-002, -2.723938e-002, 2.935481e-003, -2.317187e-002, -6.787879e-003, 3.160763e-002, 4.910013e-003, -1.221867e-002, -2.375111e-002, 1.393115e-002, -2.338883e-002, -4.192148e-003, 2.104770e-002, -3.537812e-002, -1.015294e-002, 2.055988e-002, 5.065404e-002, -7.884889e-002, -2.967811e-002, 3.267132e-002, -4.774921e-003, -2.494163e-002, -3.016768e-003, 6.109296e-003, -8.442403e-003, -1.133745e-002, 2.009419e-002, -1.133745e-002, -8.442403e-003, 6.109296e-003, -9.763984e-003, 3.724742e-003, -9.967122e-004, -4.304488e-002, 7.040134e-002, -9.624155e-004, -3.114624e-002, 1.889322e-002, -2.655747e-002, 3.542877e-002, 2.221493e-002, 1.186981e-001, -6.796801e-002, -1.994524e-002, 1.016338e-001, -1.577898e-002, -2.767897e-002, -5.689785e-002, 3.273321e-002, 5.709214e-002, -1.002535e-001, -2.318446e-002, 2.152524e-002, 2.877016e-002, -1.029857e-002, -9.590612e-003, -9.655157e-002, -9.590612e-003, 1.983472e-002, 4.463603e-002, -3.557977e-002, -1.470038e-001, -2.486833e-002, -8.690574e-002, 2.899104e-001, -8.690574e-002, 2.372578e-002, 1.103122e-001, 5.937813e-002, 4.039793e-002, 4.383882e-002, -2.615328e-002, 1.537187e-001, -2.615328e-002, -7.476424e-003, 1.346200e-001, -2.349293e-002, -3.278925e-002, -1.174452e-002, 6.399841e-003, -3.310959e-002, 6.399841e-003, -2.564093e-002, 1.940967e-002, 1.242519e-002, 1.929313e-002, 3.929371e-003, -5.412346e-003, -7.963484e-002, -5.412346e-003, 9.593393e-002, -4.699187e-002, -1.436882e-002, 4.429860e-002, 4.334082e-002, -4.614636e-002, 1.285175e-001, -4.614636e-002, -9.245828e-002, -2.159758e-002, 1.595961e-001, 4.538718e-002, -4.075511e-002, 7.747585e-002, 3.667909e-003, 7.747585e-002, 7.444148e-002, -3.115341e-002, -2.583699e-001, 7.881870e-002, 6.275954e-003, 5.779662e-003, -9.891621e-002, 5.779662e-003, 9.398379e-002, -8.376697e-002, -6.005023e-002, 1.012516e-001, 3.565546e-002, 3.703369e-002, -1.684075e-002, 3.703369e-002, 5.530554e-002, -2.056070e-001, -3.109129e-002, 3.843555e-004, -1.703391e-002, -1.381690e-002, 9.480929e-002, -1.381690e-002, 3.645246e-002, 1.130199e-001, -1.679060e-002, -1.903405e-001, -1.740176e-002, 1.873500e-002, 6.744448e-002, 1.873500e-002, 9.603863e-003, -1.135607e-001, -1.265577e-001, 8.277502e-003, 2.644941e-002, 2.366432e-002, 4.673983e-002, 2.366432e-002, -1.274481e-001, -1.206382e-001, 4.018629e-002, 8.526191e-002, -2.034129e-002, 2.049571e-002, -1.837019e-002, 2.049571e-002, 6.604764e-002, -1.103904e-001, -8.636736e-003, -8.973453e-002, -5.138203e-003, 8.428268e-003, 1.909572e-002, 8.428268e-003, -2.910002e-002, -1.055384e-001, -1.454898e-002, 2.505801e-002, -


© ISO/IEC 2004 — All rights reserved

Copyright International Organization for Standardization
Provided by IHS under license with ISO
No reproduction or networking permitted without license from IHS
Not for Resale

3.939595e-004, 3.399434e-002, -7.016464e-003, 3.399434e-002, -2.595550e-002, -1.133567e-001, -5.277204e-002, -2.196569e-001, -1.167046e-002, 2.202467e-002, -5.320563e-002, 2.202467e-002, 5.542596e-003, -9.665670e-002, 1.943496e-001, -1.183756e-001},
{-3.615902e-004, -4.062914e-003, 7.499634e-003, 3.414926e-003, -1.215772e-003, -1.243108e-002, 1.878889e-003, 3.464381e-003, 2.176909e-002, 3.464381e-003, 1.878889e-003, -1.243108e-002, -1.215772e-003, 3.414926e-003, 7.499634e-003, -4.062914e-003, -7.470677e-003, -7.092985e-004, -1.030845e-002, -2.609438e-002, -8.348373e-003, 1.470430e-003, -7.260451e-003, 1.341517e-002, 5.840765e-003, -1.996076e-002, -1.272025e-002, 2.576334e-003, -1.691336e-002, 1.835432e-003, 5.893750e-004, 1.444124e-002, -1.676224e-002, 5.664221e-003, -1.030222e-002, -1.591756e-002, 1.336837e-002, -3.351439e-002, -5.137043e-003, 1.277216e-003, 4.719871e-003, -1.011874e-002, 1.680240e-002, 3.895040e-003, -1.070520e-002, -1.681324e-002, 6.991206e-003, -9.187272e-003, 7.835519e-003, 1.171556e-002, -4.175230e-003, -1.775839e-002, 1.046811e-002, -2.441819e-003, -7.838757e-004, -8.922422e-004, -4.606776e-003, 3.584605e-002, 2.591726e-002, -2.839412e-003, -2.089145e-002, 9.666463e-003, 1.733610e-002, -5.119988e-003, -2.287484e-002, -3.097632e-003, 1.255131e-002, 1.310300e-002, 1.801398e-002, -3.774692e-003, 3.129241e-002, 7.115785e-003, -4.831979e-003, 2.109987e-002, -9.329443e-003, -6.567553e-004, -1.612526e-003, 1.283295e-002, -1.410048e-002, 3.225506e-002, 9.890673e-003, -2.994328e-003, 8.283132e-003, -1.868449e-002, 2.559826e-002, 5.862918e-003, -3.361632e-002, 3.317027e-002, 1.251550e-002, 7.449360e-003, 1.025882e-002, 4.770562e-002, -1.026435e-002, 6.396328e-003, -8.262032e-003, 1.669071e-002, 3.031231e-002, 1.098291e-002, 1.402416e-003, 4.987358e-002, 1.007811e-002, 6.865681e-002, -2.145455e-002, 6.072681e-002, 2.093442e-002, 1.481543e-002, 3.905198e-002, 1.167785e-002, 3.458381e-002, 4.085960e-002, -1.948244e-004, -2.578985e-002, -2.271788e-002, -3.685948e-003, 4.923236e-003, 2.439310e-002, 5.579771e-003, 4.210303e-002, 2.033503e-003, 5.000888e-002, -3.876353e-002, -3.009200e-002, -7.095266e-003, 7.485424e-003, -4.653907e-002, 6.365465e-003, -8.978677e-003, -6.346084e-003, 2.840856e-003, -1.278099e-002, -2.462086e-003, 2.243175e-003, -9.349380e-003, 2.243175e-003, -2.462086e-003, -1.278099e-002, 3.308775e-002, 5.218143e-002, -8.548505e-002, 8.432696e-002, 2.828537e-002, -6.250778e-002, 5.531043e-002, -3.580236e-002, -8.075480e-003, 6.009327e-003, -1.654790e-002, -4.933718e-002, -1.139370e-001, 2.785781e-002, -2.272527e-002, -5.331939e-002, 5.887975e-003, -2.351688e-002, -1.108142e-001, -3.946816e-002, -4.339938e-002, 1.495862e-002, 2.313496e-002, 4.570988e-002, -3.400718e-003, -1.929520e-003, 1.091294e-002, -1.099885e-003, 1.029387e-002, -1.099885e-003, 1.091294e-002, -1.929520e-003, 6.250229e-003, 2.358488e-002, -1.452133e-002, 6.730630e-002, -6.186956e-002, 1.404595e-002, 2.693552e-002, -2.239775e-002, 2.639577e-002, 9.742316e-004, -4.704508e-002, 4.867828e-003, 7.138327e-003, -1.613735e-002, 7.904451e-003, 4.120755e-002, 6.388499e-003, -6.996129e-002, -2.733399e-002, -2.581092e-002, -2.219363e-002, -1.007754e-001, -6.934706e-003, -3.695183e-002, -3.739292e-003, -9.228802e-003, 3.604131e-003, 1.912127e-002, -2.017820e-002, 1.912127e-002, 3.604131e-003, -9.228802e-003, 3.102711e-002, 3.432413e-002, -2.257758e-002, -3.089187e-002, 2.677109e-002, -2.992573e-002, -1.495556e-002, 2.142936e-002, -1.537798e-002, -3.374363e-002, 1.531911e-002, 4.501018e-002, 2.056291e-002, -2.528447e-002, 1.779750e-002, 3.497880e-002, -4.154054e-002, -3.020476e-002, 1.138873e-002, 4.821589e-002, -6.512151e-002, -5.003782e-002, -7.760081e-002, 6.345332e-002, 3.937564e-003, -7.921331e-004, 2.549323e-003, -1.201184e-002, 1.429371e-002, -1.201184e-002, 2.549323e-003, -7.921331e-004, 1.197361e-002, -2.945119e-002, 4.689999e-002, -2.072647e-002, 3.945952e-002, -1.101650e-002, -7.164893e-002, -3.922026e-002, 2.429363e-002, 1.168475e-002, -8.329837e-003, 8.150179e-002, 1.236657e-001, 8.214584e-002, -1.731624e-002, -5.071869e-002, 2.806120e-002, 1.185441e-002, -8.465312e-002, 8.180711e-003, -2.055256e-002, -1.764966e-002, -4.122762e-002, -1.476598e-003, 2.564828e-002, 1.906491e-002, 1.331840e-002, 1.906491e-002, -1.066115e-002, -2.771505e-002, 2.663397e-002, 1.285289e-001, -1.494132e-002, -3.253370e-002, 4.542244e-001, -3.253370e-002, -4.843765e-002, -1.235543e-001, 3.566551e-002, 1.528591e-001, -5.389526e-003, 4.215505e-002, -1.573303e-002, 4.215505e-002, -4.308902e-002, 1.310322e-002, -9.193244e-002, -9.746688e-002, 1.537347e-002, 2.550350e-003, 1.116112e-002, 2.550350e-003, 3.100379e-002, 1.183551e-001, 3.327489e-002, -1.589946e-002, -2.029114e-002, 1.074484e-002, -3.961751e-002, 1.074484e-002, -1.380295e-002, 1.008453e-001, 4.116017e-002, 8.052816e-002, 1.242503e-002, -2.630071e-002, 5.325537e-002, -2.630071e-002, 2.669819e-002, -3.430592e-002, 2.237030e-001, 3.735546e-002, -2.230554e-002, 1.422401e-002, 3.145680e-003, 1.422401e-002, -3.949618e-002, 2.359025e-002, -4.786855e-002, 2.148101e-002, 8.920881e-003, 1.329218e-002, -1.632114e-001, 1.329218e-002, -5.905221e-002, -1.901640e-002, -1.787850e-002, 3.502747e-002, 1.068495e-002, 2.916956e-002, 3.821355e-002, 2.916956e-002, 5.184313e-002, -1.163692e-001, 3.093138e-003, 1.624589e-002, 2.683287e-003, 9.534388e-003, -2.044351e-001, 9.534388e-003, 5.704358e-002, -1.268927e-001, 1.664093e-001, -1.840985e-001, -7.739219e-003, 1.614386e-002, 2.868540e-002, 1.614386e-002, -8.642129e-002, 1.009629e-002, 1.633072e-001, -4.480920e-002, 1.627063e-002, -1.052095e-002, 1.377756e-001, -1.052095e-002, 3.126461e-002, -6.818963e-002, 3.115444e-002, 6.835435e-002, 3.826467e-003, -6.111598e-003, 3.300582e-002, -6.111598e-003, -9.981336e-002, -9.020882e-002, -6.059464e-002, 3.940885e-002, -2.093399e-002, 6.194109e-002, 1.808318e-001, 6.194109e-002, 3.931825e-002, 2.284080e-002, -1.166491e-001, -7.797613e-002,

© ISO/IEC 2004 — All rights reserved


Copyright International Organization for Standardization
Provided by IHS under license with ISO
No reproduction or networking permitted without license from IHS
Not for Resale

1.085364e-002, -9.227316e-003, 6.092280e-002, -9.227316e-003, -8.861553e-003, -3.813871e-002, -2.867627e-002, 1.753150e-002, -1.544749e-002, 1.134423e-002, 1.169391e-002, 1.134423e-002, 3.556856e-002, -1.990544e-002, -1.518891e-001, 3.082902e-002},
{-1.455158e-004, -4.375454e-004, 7.691419e-003, -1.269307e-003, 1.508751e-005, -6.380166e-003, -5.207924e-003, 6.345916e-003, 6.682672e-003, 6.345916e-003, -5.207924e-003, -6.380166e-003, 1.508751e-005, -1.269307e-003, 7.691419e-003, -4.375454e-004, -5.935844e-003, -3.219838e-003, 1.666132e-002, 7.952328e-003, -1.059546e-002, -2.844221e-002, 2.707680e-002, 7.125007e-004, 1.300608e-002, 4.506195e-003, 1.291565e-002, -1.934970e-002, -6.621072e-003, 1.170754e-003, -4.426220e-003, -5.242864e-003, 1.171508e-003, 3.233516e-003, -6.284606e-003, 1.661467e-002, -1.854254e-002, 1.841289e-002, 2.263947e-002, 1.010370e-003, -4.449219e-003, 1.095461e-003, -2.069490e-002, -1.766401e-002, 7.168007e-003, 1.284245e-002, 1.425874e-003, -2.389905e-004, 7.828784e-003, -1.800250e-002, -1.587241e-005, 7.539529e-003, -6.416714e-003, 1.718993e-002, 1.408027e-003, -2.354878e-003, 2.691723e-003, 1.306880e-002, -1.012835e-002, 1.715428e-002, 3.127251e-004, 1.587900e-002, -5.252664e-003, 1.267915e-002, -1.363268e-003, -6.103026e-003, -4.854599e-002, -1.007005e-002, 4.676580e-003, 1.070344e-002, -7.089888e-003, 2.547774e-002, 1.277435e-002, 3.648768e-003, -1.783475e-002, 3.726621e-003, 1.772593e-002, -3.114205e-003, -2.840626e-002, 6.441025e-003, 2.284450e-002, 1.973599e-002, -1.478872e-003, -8.676314e-003, 1.966170e-002, -4.396545e-002, -1.511078e-002, -7.339402e-002, 2.939367e-003, -2.417310e-002, -6.219609e-002, 2.924538e-004, 1.854403e-002, 2.430303e-002, 1.312811e-002, 3.393236e-002, 1.318053e-002, -1.498940e-002, -6.201756e-003, 1.770478e-002, 2.677278e-002, 1.099507e-005, 3.687522e-003, 6.479118e-003, -3.138218e-002, -2.263226e-004, 2.329927e-002, 5.490885e-003, 3.299766e-002, 1.963553e-002, 1.465366e-002, -2.993862e-003, -1.318743e-003, 9.176239e-003, 1.850816e-002, -9.581574e-003, 4.136799e-002, 1.136499e-002, -5.798757e-002, 2.169494e-002, 8.418813e-002, -2.248283e-002, -2.579867e-002, 3.388858e-002, 7.029658e-002, 1.937137e-002, 2.191291e-003, -2.150127e-002, 6.056715e-004, -1.465945e-002, -1.234842e-002, 1.779990e-002, -2.195790e-002, 1.779990e-002, -1.234842e-002, -1.465945e-002, 1.427745e-002, -3.996090e-002, 7.342719e-004, -1.277880e-001, -3.741794e-002, 5.027090e-002, 2.693302e-002, -1.094494e-002, 2.503559e-002, 4.889877e-002, -2.145273e-002, 1.771040e-002, 4.542110e-003, -2.425655e-002, -4.031224e-002, 5.552288e-002, -9.879995e-004, 4.002414e-002, -5.340314e-003, 5.868534e-002, -4.327905e-003, 5.559349e-002, -2.133386e-002, -7.598568e-002, -8.763968e-004, 8.631541e-004, -8.496446e-003, 1.627095e-003, -2.194446e-002, 1.627095e-003, -8.496446e-003, 8.631541e-004, 6.809197e-003, -3.077440e-003, 4.717371e-002, 5.963740e-002, 2.487704e-002, -1.685513e-002, -2.307251e-002, 9.637376e-003, 3.468165e-003, 1.868088e-002, -7.584692e-002, -5.682261e-002, -1.882077e-002, 2.049126e-002, -2.488492e-002, 2.149142e-002, -5.335301e-002, 2.788257e-003, -6.116011e-002, -3.918977e-002, -8.808014e-002, 9.465414e-003, -1.073250e-001, -8.782256e-003, -1.758432e-003, 7.729295e-003, -3.919566e-003, 1.341655e-002, -4.336344e-002, 1.341655e-002, -3.919566e-003, 7.729295e-003, -3.881008e-002, -8.502633e-003, 1.604316e-002, -3.756226e-002, -4.266139e-002, 1.948182e-002, -1.076238e-002, -8.695045e-003, -1.982836e-002, -8.990963e-002, -8.041777e-002, 6.718099e-004, 3.002626e-002, 7.306426e-004, 4.363126e-002, -1.974776e-002, -1.544017e-002, 1.500483e-002, 5.593357e-002, -2.708293e-002, -4.071866e-002, 6.879385e-002, -1.011461e-002, -4.918738e-002, 1.883642e-003, -1.293848e-003, 1.634389e-002, 4.227954e-003, -3.525237e-002, 4.227954e-003, 1.634389e-002, -1.293848e-003, 2.485432e-002, 2.886348e-002, -6.194946e-004, -1.201368e-002, -4.164549e-002, 2.565855e-002, 2.656289e-002, -1.881655e-002, -3.137617e-002, -1.966807e-002, 2.039993e-002, 8.596822e-003, 5.173150e-003, -2.568757e-002, -4.321088e-002, -6.447486e-002, -5.340225e-002, 2.433907e-002, -1.871377e-003, 1.830093e-002, 1.031647e-001, -3.332950e-002, -9.199413e-003, -6.292827e-003, -2.192881e-002, 2.358379e-002, 1.121025e-002, 2.358379e-002, 8.365095e-004, 1.315002e-001, -1.343867e-001, -1.100478e-001, 2.299980e-002, 3.368701e-002, 1.256157e-002, 3.368701e-002, 2.592132e-002, 1.868231e-001, 2.036468e-002, -4.889852e-002, 3.149492e-003, -7.580365e-002, 3.152245e-001, -7.580365e-002, -8.846359e-002, -1.431294e-001, -7.426695e-003, -1.808508e-001, -1.805750e-002, -6.375695e-003, -8.307325e-002, -6.375695e-003, -1.890807e-002, 2.733317e-002, 1.623968e-001, 3.169235e-002, 1.209476e-002, -6.880721e-003, -1.505461e-002, -6.880721e-003, -8.012211e-003, 2.463613e-002, 2.977706e-002, 1.039710e-001, -1.256008e-002, 1.657833e-002, 1.240994e-001, 1.657833e-002, 4.600647e-002, -5.395485e-002, -7.916358e-002, -1.141692e-001, 2.531302e-003, -3.720537e-002, 1.019480e-001, -3.720537e-002, -3.168332e-002, -1.107680e-001, -4.490228e-002, 1.915090e-001, 1.150031e-002, -1.297762e-002, -9.083715e-004, -1.297762e-002, -3.195286e-002, 5.098888e-003, 1.614746e-001, 5.320633e-002, 7.544355e-003, 3.737907e-004, -2.885918e-003, 3.737907e-004, -3.413626e-002, 1.979712e-001, -1.942886e-001, 1.047919e-001, 2.404172e-002, -7.216625e-003, -7.676397e-002, -7.216625e-003, -3.478133e-002, 1.041691e-001, 1.959377e-001, 1.475839e-001, 7.479352e-003, -4.223573e-002, 8.154271e-002, -4.223573e-002, -1.187419e-003, -7.688526e-002, 8.927271e-002, -5.615407e-002, 2.090378e-003, -5.556637e-003, -5.447633e-002, -5.556637e-003, -9.303016e-003, -5.489557e-002, 4.621667e-002, 1.044350e-001, -7.018594e-003, -1.652617e-002, 2.518751e-002, -1.652617e-002, -4.245371e-002, 1.815564e-002, 1.241688e-001, 1.040165e-001, -2.632592e-002, 6.953764e-003, -6.826668e-002, 6.953764e-003, 6.174749e-002, 3.172255e-002, 2.933008e-002, 1.097373e-001, -


© ISO/IEC 2004 — All rights reserved

Copyright International Organization for Standardization
Provided by IHS under license with ISO
No reproduction or networking permitted without license from IHS
Not for Resale

4.635702e-003, -3.078197e-002, 6.580475e-002, -3.078197e-002, 5.539071e-002, -1.379962e-001, -1.698466e-001, 6.677984e-002, -3.050387e-003, -7.422499e-003, -1.248229e-003, -7.422499e-003, -2.955604e-002, 4.458179e-002, 5.065810e-003, 3.313506e-002},
{-1.541431e-005, 1.109919e-003, -4.368574e-003, -1.060895e-003, 1.236600e-003, 1.824938e-002, -1.149131e-002, -2.011892e-003, 1.669868e-002, -2.011892e-003, -1.149131e-002, 1.824938e-002, 1.236600e-003, -1.060895e-003, -4.368574e-003, 1.109919e-003, -9.663891e-003, -8.058515e-003, -1.155380e-002, -2.656264e-003, -1.407613e-004, -3.971872e-003, -1.105993e-002, 7.907628e-003, 8.916947e-003, -2.143414e-002, 8.483091e-003, 1.241016e-002, -1.843798e-003, -1.771611e-002, -1.290418e-002, 3.819364e-003, -8.505419e-003, 1.329590e-003, 1.051402e-002, 3.056230e-003, -1.173231e-002, -1.057353e-003, -4.098922e-003, 1.546627e-002, 5.308775e-003, 1.859653e-002, -4.354705e-003, -3.090891e-002, -7.717691e-003, -4.913752e-003, 3.701294e-003, -1.910056e-003, 1.667973e-002, 1.129413e-002, 5.364444e-003, 1.531138e-002, 4.945470e-003, -6.584215e-003, 9.079538e-003, 4.665321e-002, 1.089546e-002, 2.163301e-002, -2.722580e-002, -8.621829e-003, 6.297433e-002, 1.265495e-002, -1.352764e-002, 6.075682e-003, 2.316792e-002, 4.322307e-003, 1.287926e-002, -2.911445e-002, 1.250716e-002, -6.773485e-003, -1.936078e-002, 4.927658e-002, 3.911761e-002, -1.405179e-002, 5.947144e-002, 1.898348e-002, 2.004788e-002, -1.064619e-002, -1.014449e-002, -1.021577e-002, 1.060523e-002, -6.459860e-003, -7.155241e-003, -2.095082e-002, -8.131685e-003, -7.815023e-003, -3.653332e-003, 2.763571e-002, 1.244925e-002, -1.187340e-002, 1.596562e-002, -1.482909e-002, -8.418577e-003, -2.260388e-002, -2.272557e-002, 1.113636e-002, 9.972918e-003, -1.930630e-002, -2.385170e-002, -7.786444e-003, -3.017019e-002, 1.340261e-002, -1.516288e-003, 6.590734e-003, 1.033548e-002, -5.401412e-002, -2.215017e-002, 2.446601e-002, -2.348967e-002, -6.981086e-003, -3.490097e-002, -1.780871e-002, 2.900888e-002, 6.913895e-003, -9.017183e-003, -3.091450e-002, 5.409773e-002, -1.813082e-002, -3.417545e-002, -2.717333e-002, -1.809697e-002, 8.286790e-004, -2.735662e-002, -5.387280e-002, -2.289747e-002, 4.555445e-003, -2.195352e-002, -6.839002e-003, -5.703395e-003, -9.422373e-004, 4.533785e-003, 5.311666e-003, -4.830638e-002, 5.311666e-003, 4.533785e-003, -9.422373e-004, 1.468984e-002, 4.345407e-003, 9.126039e-003, 4.431129e-002, -2.086416e-002, 6.126258e-002, -3.403011e-003, 3.863518e-002, -2.773680e-003, 1.082142e-002, -1.137467e-002, -3.379666e-002, -1.022480e-002, -9.132323e-002, -7.875055e-002, -1.054889e-003, 1.070058e-002, -2.850077e-003, 1.267777e-002, -3.063859e-002, 8.750136e-003, -9.259002e-003, -4.676085e-003, 1.256898e-002, 2.390296e-003, 1.550167e-004, -5.426201e-003, -5.522209e-003, 9.518408e-003, -5.522209e-003, -5.426201e-003, 1.550167e-004, -5.909575e-005, -1.172626e-002, -2.991765e-002, 6.843194e-002, 8.025408e-002, -2.908073e-003, -4.416653e-002, -2.475909e-002, -5.347870e-002, 1.158475e-002, -6.327465e-002, -4.068298e-002, -7.932821e-002, -5.607247e-002, 3.997160e-003, -3.941544e-002, -2.517279e-002, 4.056278e-002, -1.267531e-002, 1.276649e-001, 6.820500e-002, -1.507670e-002, -3.386182e-002, 9.257899e-002, 3.724142e-003, 1.156980e-002, 2.105494e-002, -1.993138e-002, -6.056941e-002, -1.993138e-002, 2.105494e-002, 1.156980e-002, 1.449445e-002, -2.904745e-002, -1.343969e-003, 3.334023e-002, -3.425865e-002, 2.040090e-002, 5.571977e-003, -1.320270e-002, 2.582283e-002, 4.683104e-003, -4.292370e-002, -5.100402e-003, 4.719147e-003, 2.031835e-002, -1.498852e-002, 1.745959e-002, 2.631823e-002, 1.440385e-002, 5.312476e-002, 1.169707e-002, -1.831571e-002, -2.716385e-002, -6.053395e-002, 3.644669e-003, -4.264570e-004, 3.676118e-003, 1.883299e-002, -1.637358e-002, -1.883807e-002, -1.637358e-002, 1.883299e-002, 3.676118e-003, 2.999419e-002, 2.479359e-002, 1.863923e-002, -4.921165e-002, 2.013825e-002, 2.282177e-002, 2.329419e-002, -1.384378e-002, -5.226743e-002, -5.866606e-002, 1.612603e-002, -6.235128e-002, 4.071316e-002, 3.896446e-002, -7.180592e-003, 5.625410e-002, -1.410170e-002, -2.638991e-002, -5.228084e-002, -1.895941e-002, -1.398853e-002, 2.925426e-002, 3.968026e-002, 2.791453e-002, 4.896824e-003, -2.018395e-002, 1.074699e-001, -2.018395e-002, -3.585194e-002, 4.278249e-003, 1.348492e-001, -9.855784e-002, -7.603952e-003, 2.199040e-003, 1.478495e-001, 2.199040e-003, -9.578055e-002, -4.931465e-002, 4.755234e-002, 1.963139e-001, -9.978431e-003, 6.483094e-002, -1.836421e-001, 6.483094e-002, -1.889193e-002, -2.196093e-001, 5.500390e-003, 3.384363e-001, -2.107288e-003, 1.788617e-002, -1.967667e-002, 1.788617e-002, 4.440377e-002, 2.578224e-002, -4.059804e-002, -3.493980e-002, 1.489242e-002, 3.044511e-003, 5.529297e-002, 3.044511e-003, 1.477368e-002, -2.376389e-002, -2.180137e-002, 4.782174e-002, -1.788869e-002, -2.816961e-002, -1.611567e-002, -2.816961e-002, -6.602804e-002, 1.067684e-002, 4.935869e-002, -2.018554e-002, 2.430350e-002, 3.670242e-002, 6.027991e-002, 3.670242e-002, 1.049022e-001, 1.918214e-002, -8.721592e-002, -1.218285e-002, -9.827488e-003, 1.264941e-002, -5.926518e-002, 1.264941e-002, -1.837834e-003, -6.547290e-002, 1.221690e-001, 1.313334e-001, -2.430987e-002, -4.649211e-002, 1.028643e-001, -4.649211e-002, 6.731275e-002, 1.546524e-001, -1.277580e-001, -3.310821e-002, 4.048708e-002, 2.157924e-002, 9.745421e-003, 2.157924e-002, -1.308365e-001, 1.050043e-001, 9.107639e-002, 1.022436e-001, -2.341650e-002, 1.828637e-002, -1.415408e-001, 1.828637e-002, -4.494951e-002, -1.281513e-002, -3.285577e-002, -5.533724e-002, -1.559022e-002, -4.279682e-002, 1.633119e-001, -4.279682e-002, 1.813430e-001, -1.885309e-001, 2.771112e-002, 7.258378e-002, 6.942111e-003, -7.100646e-003, 6.010391e-002, -7.100646e-003, 2.453471e-002, 7.515312e-003, 1.674772e-001, -5.549818e-002, -1.939517e-002, -1.117177e-003, -1.547910e-001, -1.117177e-003, -3.481117e-002, 1.739923e-002, 7.011113e-002, -1.505731e-001,

© ISO/IEC 2004 — All rights reserved


Copyright International Organization for Standardization
Provided by IHS under license with ISO
No reproduction or networking permitted without license from IHS
Not for Resale

3.158795e-002, 5.762768e-003, 5.132148e-002, 5.762768e-003, -3.860495e-002, 3.262981e-002, 1.755619e-001, 2.092469e-002, 6.992314e-003, 1.047588e-002, -5.380106e-002, 1.047588e-002, 7.185114e-002, -3.649239e-002, -4.552284e-002, 9.658373e-002}, {-4.536348e-005, -1.420196e-003, 4.726634e-004, 4.309274e-003, 3.877335e-003, -1.101556e-002, -1.199930e-002, 1.080087e-002, 1.685739e-002, 1.080087e-002, -1.199930e-002, -1.101556e-002, 3.877335e-003, 4.309274e-003, 4.726634e-004, -1.420196e-003, 4.432774e-003, 6.872714e-004, -2.079262e-002, 8.226533e-003, -4.561390e-003, -1.389764e-002, 1.975928e-002, -1.285134e-002, 1.140370e-002, 7.311112e-003, -1.677883e-002, -1.664379e-002, 5.868174e-003, 8.184618e-003, 7.746053e-003, 4.446099e-003, 7.610766e-003, -1.197192e-002, -2.297792e-002, -1.897295e-002, 3.681439e-003, -1.846340e-002, 7.004606e-003, -2.203582e-002, 3.165441e-002, 1.246021e-002, 1.145332e-002, 1.836342e-002, 1.565900e-002, 1.431896e-002, 4.840197e-003, 1.968289e-002, 5.662544e-003, -1.105335e-002, -1.697938e-002, 4.090010e-004, -3.349733e-003, 1.123611e-002, 2.080151e-002, -1.385605e-002, 4.594953e-003, 3.006402e-003, 1.921857e-002, -4.256471e-003, 1.157865e-002, 9.858629e-004, 9.684415e-003, -1.045648e-003, -1.895311e-002, -7.504794e-003, 1.336411e-002, -1.519810e-002, -1.458191e-002, 1.704954e-002, -3.012899e-002, 3.766520e-003, 4.093661e-003, 4.476472e-002, 6.029303e-003, -1.429974e-002, -2.592256e-002, -1.671641e-002, 2.826678e-002, 1.906343e-002, -3.634962e-004, 1.035071e-002, -5.972718e-003, -7.760310e-003, 6.573164e-003, -5.040604e-004, -4.389131e-003, 1.897511e-002, 9.358859e-003, 4.183654e-002, -1.764778e-002, -3.497407e-002, 9.016418e-003, -1.273105e-002, -1.405214e-002, 1.524657e-002, 2.780912e-003, -1.648223e-002, 1.994043e-002, -5.498777e-003, -1.754969e-002, -1.302808e-002, 4.159873e-003, -4.046608e-002, 3.323735e-002, -3.384176e-002, -1.476452e-002, 1.417212e-002, -3.558017e-002, -1.316087e-002, 9.294120e-004, 4.149764e-003, 3.927593e-002, 1.452852e-002, 1.483798e-002, -4.279545e-002, 2.902011e-003, -3.553492e-002, -6.961239e-003, -1.291969e-002, -2.814341e-002, -6.805819e-002, 9.305390e-003, -2.374307e-002, -2.832181e-002, -4.556119e-002, -3.391739e-002, -4.734073e-003, 3.017578e-003, 4.615145e-003, -2.881668e-002, 2.370636e-002, -2.090888e-002, 2.370636e-002, -2.881668e-002, 4.615145e-003, -2.177977e-002, 3.641022e-002, 1.048728e-002, 7.031344e-002, -1.105423e-001, -7.663793e-003, -1.280770e-003, -3.134529e-002, -3.511879e-004, -5.980503e-002, 7.956286e-002, 5.395907e-003, -6.884652e-002, -8.403528e-002, -3.139436e-003, 5.135308e-003, -2.569117e-002, -2.466350e-002, 1.785700e-002, 6.402270e-002, 1.032592e-001, 2.355245e-002, -2.568761e-002, -3.927751e-002, -3.248365e-003, -3.938325e-003, -4.265949e-003, 3.248541e-002, -7.051950e-002, 3.248541e-002, -4.265949e-003, -3.938325e-003, -1.372395e-002, 3.017605e-002, 8.210049e-003, -5.104674e-002, -1.590980e-002, -5.201913e-002, -3.207510e-002, 1.090380e-003, 3.029133e-003, -4.879763e-002, 3.398351e-002, 7.685051e-002, -5.674971e-003, 8.083744e-003, -2.382723e-002, 4.023988e-002, -7.825722e-003, 3.673582e-002, -3.039005e-002, -6.732664e-002, -6.559480e-004, 1.088712e-001, 3.842503e-002, 6.735399e-002, -8.606476e-004, 1.199350e-003, -1.665310e-002, 1.710685e-002, 1.284118e-002, 1.710685e-002, -1.665310e-002, 1.199350e-003, -1.659749e-002, 2.422591e-002, -2.559736e-002, 1.799998e-002, 2.829434e-002, -3.482903e-002, -8.035382e-003, -4.546559e-002, -2.634686e-002, 4.049084e-003, -7.149919e-002, 4.324163e-002, 6.803546e-002, -4.640242e-002, -1.013123e-002, -4.162504e-002, -8.562484e-002, -2.277966e-002, 5.965203e-002, -3.609237e-002, 6.276068e-002, 4.997168e-002, 1.626900e-002, 3.165091e-002, 1.046072e-003, 1.752152e-003, 7.566764e-003, 1.790363e-002, -1.118359e-002, 1.790363e-002, 7.566764e-003, 1.752152e-003, 2.189644e-002, 2.060588e-002, 4.787220e-002, -4.842403e-002, -3.327684e-002, 2.210639e-002, -1.640278e-002, -2.132711e-002, 2.592243e-002, 2.719926e-002, 1.663326e-001, 3.646378e-003, -3.054872e-002, 4.870255e-002, -1.557561e-002, -1.108362e-002, 6.459236e-002, -4.602879e-003, 7.843982e-002, -4.194747e-002, 1.025583e-002, -9.700936e-003, 4.023121e-003, -9.945304e-003, 9.078849e-003, 8.453729e-003, 5.194490e-002, 8.453729e-003, 1.007184e-001, 6.531818e-002, -1.502773e-002, -1.192531e-001, -5.215552e-003, 9.017125e-002, -1.292306e-001, 9.017125e-002, 8.045194e-002, 4.209788e-002, -2.800189e-002, -6.068439e-002, -4.336226e-003, 4.413873e-002, -2.526603e-001, 4.413873e-002, -5.179689e-002, 2.723687e-001, -3.652245e-002, -9.266184e-002, 8.222173e-003, -2.054970e-003, 1.155316e-001, -2.054970e-003, -2.761472e-002, -1.395197e-001, 1.055242e-001, -6.231797e-002, -1.166008e-002, 1.139305e-002, -5.360302e-002, 1.139305e-002, 6.403036e-002, 3.306424e-003, 8.197909e-002, -2.257082e-002, 1.081436e-002, -1.778330e-002, 6.133969e-002, -1.778330e-002, -9.769888e-003, -5.940933e-002, 4.285286e-002, 1.349954e-001, -1.751416e-002, -1.580945e-002, 1.239990e-001, -1.580945e-002, 5.503529e-002, 1.136744e-001, -5.359905e-002, -9.231726e-004, 1.037984e-002, 3.440634e-003, 3.096410e-003, 3.440634e-003, -5.375748e-002, -3.753928e-002, -2.609156e-002, -8.493495e-002, 4.279457e-003, 2.952651e-002, -3.806576e-002, 2.952651e-002, 3.081210e-002, -1.947104e-002, 2.377057e-002, 1.095449e-002, 2.364093e-002, 1.806213e-002, -1.104902e-001, 1.806213e-002, 3.473942e-003, 1.073528e-001, -1.468519e-001, -1.695418e-002, -3.998441e-002, -1.840670e-002, -1.064127e-002, -1.840670e-002, 1.698966e-002, -3.038229e-001, -6.649246e-002, -7.081822e-002, -4.216839e-003, 1.863531e-002, -1.268062e-001, 1.863531e-002, -4.112852e-002, 3.932931e-002, 2.862910e-002, 8.082369e-002, -7.547009e-003, 1.719410e-002, -7.907416e-002, 1.719410e-002, 5.949988e-002, 7.608484e-002, 4.579111e-002, -8.765730e-003, -2.123402e-002, 1.290296e-002, 1.637615e-002, 1.290296e-002, 1.326898e-001, 5.057803e-002, 1.217303e-001, -1.995139e-002,


© ISO/IEC 2004 — All rights reserved

Copyright International Organization for Standardization
Provided by IHS under license with ISO
No reproduction or networking permitted without license from IHS
Not for Resale

4.262894e-002, -2.816195e-002, 4.730043e-002, -2.816195e-002, -8.501301e-002, -2.118377e-001, 2.331188e-002, 5.425504e-002, 2.618380e-003, -6.330578e-003, 9.015949e-002, -6.330578e-003, -1.828922e-001, -6.420139e-002, 1.627460e-001, 5.983260e-003}, {1.283721e-004, 3.788349e-003, -6.873423e-003, -7.207590e-004, 1.092577e-003, 6.260758e-004, -2.687413e-003, 2.069049e-003, 3.115428e-003, 2.069049e-003, -2.687413e-003, 6.260758e-004, 1.092577e-003, -7.207590e-004, -6.873423e-003, 3.788349e-003, 3.289916e-003, -7.032367e-003, -1.045117e-002, -6.283357e-003, -1.711514e-002, 1.157001e-002, 1.719340e-002, -2.020818e-003, -2.338763e-003, 6.949108e-003, -1.915650e-002, 5.151427e-003, -2.345149e-003, -7.365054e-003, 4.854220e-003, -1.175687e-002, 9.474869e-003, 2.083639e-002, -5.370027e-003, -1.019596e-002, -1.176140e-002, -1.536367e-003, -1.816667e-002, 1.202208e-002, -4.718065e-003, -2.705724e-002, 7.795396e-003, 1.420127e-002, -1.492718e-002, 4.936079e-003, 1.398887e-002, 9.306338e-003, -4.636815e-004, 1.747543e-004, -9.700249e-004, -9.163898e-003, 1.436941e-002, 2.466180e-002, 1.606075e-002, 2.207914e-002, 2.100844e-002, -8.658610e-003, -4.293447e-002, 2.124089e-002, -1.620769e-002, -2.952293e-002, -9.142415e-003, 1.946886e-003, -8.038255e-003, 4.756088e-003, -2.768825e-002, 7.790961e-003, 2.019457e-002, 3.618887e-002, -1.102949e-002, 2.087568e-003, -2.372044e-002, -4.129644e-002, -1.829188e-002, 6.391893e-003, 9.357163e-003, -2.017036e-002, 8.738711e-003, -1.014982e-002, 4.076411e-003, 4.717907e-003, -3.708904e-002, 1.293687e-002, -8.175469e-003, -6.541475e-004, -4.992573e-003, -3.809028e-002, -2.931541e-002, -6.323498e-002, -2.397604e-002, -2.226401e-002, -1.820171e-002, 8.968216e-003, 2.575694e-002, 1.092721e-002, 6.801962e-003, 3.053413e-003, 7.220179e-003, 2.212564e-002, -1.221344e-002, 7.646248e-003, -2.976336e-003, 3.641157e-002, 2.496887e-002, 3.118570e-004, -5.089896e-002, -1.432848e-002, -3.248861e-002, -1.251332e-002, 3.125006e-002, 2.861557e-003, -5.067920e-003, -3.249642e-002, -7.347388e-003, 2.087577e-002, -3.003591e-002, -3.023197e-002, -4.914909e-002, 1.514284e-002, 3.631409e-002, 4.104997e-002, 8.086776e-003, 2.901891e-002, 4.862337e-002, 7.107141e-002, -2.012172e-002, -3.200583e-002, 1.624560e-003, 2.093919e-006, -2.668335e-003, 1.249635e-002, -3.185854e-002, 1.249635e-002, -2.668335e-003, 2.093919e-006, -4.442757e-003, -3.261278e-002, -2.957517e-002, 1.066632e-002, 6.571970e-002, -4.237947e-002, -1.678323e-002, -5.451709e-002, -9.394749e-003, 5.115566e-002, 4.126575e-002, -4.117244e-002, -9.585620e-002, 2.223369e-002, -1.552209e-002, -7.346597e-002, 3.120569e-002, 2.660838e-002, 4.644161e-002, 2.533525e-002, 3.050275e-002, -7.026798e-002, 4.743358e-002, -4.427603e-002, 5.995665e-003, 4.086084e-003, 1.936733e-002, 7.178403e-003, 2.612831e-002, 7.178403e-003, 1.936733e-002, 4.086084e-003, -1.085072e-003, -2.620686e-002, 5.156361e-002, -4.134884e-002, 9.167951e-002, -7.488450e-003, -2.489975e-002, -1.341630e-002, 1.327488e-002, 2.964830e-002, -5.309298e-002, -5.248235e-002, 1.101801e-001, -2.791902e-003, -2.910567e-002, 5.607578e-002, 1.581890e-002, 7.278664e-003, -5.017179e-002, 1.578121e-003, -1.815326e-002, 4.973216e-002, 5.831682e-002, -4.939188e-002, -4.234763e-003, 1.096014e-003, -6.656600e-003, -8.694932e-003, -5.433537e-003, -8.694932e-003, -6.656600e-003, 1.096014e-003, -9.288647e-003, -3.399263e-002, -2.419336e-002, -2.762483e-002, 4.719030e-003, 4.912566e-003, -1.477311e-002, -5.931476e-003, 9.370855e-004, -2.123380e-002, -1.770851e-002, -1.461512e-002, 5.774698e-002, -7.106581e-003, -5.487538e-002, -4.189486e-002, 8.884432e-002, 1.600342e-002, -5.954677e-004, 8.145948e-002, -5.624709e-002, -8.314605e-002, -2.133353e-002, -1.203474e-001, -3.257090e-003, 9.798765e-003, -1.678592e-002, 1.087788e-003, -1.132469e-002, 1.087788e-003, -1.678592e-002, 9.798765e-003, 7.942085e-003, -8.821996e-003, 6.009091e-002, 4.923021e-003, -3.799709e-002, 4.197488e-003, -8.564511e-002, -1.334299e-002, -1.216401e-002, -2.796293e-002, 1.111155e-002, -3.294980e-002, -8.802811e-002, 6.151772e-002, -1.132111e-002, -5.946878e-002, 1.103258e-002, -6.395395e-002, 5.292858e-002, -1.152537e-001, 2.609159e-002, 4.380565e-002, 3.319147e-003, 2.895053e-002, -2.564038e-002, 4.708328e-003, 8.043272e-002, 4.708328e-003, 1.119671e-002, -9.672698e-002, 3.314829e-002, 9.233120e-002, 1.482420e-002, 3.234093e-003, -2.227671e-001, 3.234093e-003, 6.388064e-002, -2.313933e-002, -3.062651e-002, 2.138161e-001, 7.446739e-003, -2.266421e-003, -2.449421e-001, -2.266421e-003, -1.170044e-002, 2.173596e-002, -3.609627e-002, -2.224353e-001, -2.329882e-002, -8.368845e-004, 1.110922e-002, -8.368845e-004, 3.236342e-002, 3.448441e-002, -1.527536e-001, -2.912436e-002, 3.085872e-002, 5.184454e-003, 2.190271e-002, 5.184454e-003, -1.709409e-002, 1.739782e-002, 8.799811e-002, 4.236244e-002, -1.841799e-002, 5.848504e-002, 1.568744e-002, 5.848504e-002, -8.790744e-002, -1.129768e-001, 1.547258e-001, -3.578623e-002, 1.686630e-002, 2.194624e-002, 1.476663e-001, 2.194624e-002, -4.769677e-003, 1.717430e-001, -2.145690e-001, -5.546600e-002, 4.981455e-003, -9.950080e-003, -3.939433e-002, -9.950080e-003, 7.575508e-002, 5.832834e-002, 1.004474e-001, -9.721558e-002, -2.026058e-002, 6.993162e-003, -1.917573e-002, 6.993162e-003, -5.542475e-002, -1.077619e-003, 9.364729e-002, 6.061076e-002, -5.611761e-003, 6.028316e-003, 1.284170e-002, 6.028316e-003, 1.611683e-001, 1.234512e-001, -2.150595e-002, -2.512193e-002, -4.947327e-002, -2.328772e-002, 7.626262e-002, -2.328772e-002, -3.329934e-002, -8.569719e-002, 1.954809e-001, 1.630071e-001, -1.052530e-002, -2.924823e-002, 4.562512e-002, -2.924823e-002, 6.102172e-002, -2.177136e-002, -1.020955e-001, -1.092161e-001, 1.512447e-002, 2.282539e-002, -1.609300e-002, 2.282539e-002, -6.090720e-003, 1.249520e-002, -2.976173e-002, 2.064640e-001, 6.513104e-003, 3.108238e-002, -5.244459e-002, 3.108238e-002, -3.845685e-002, 1.164839e-001, -4.778769e-002, -8.475744e-003,

© ISO/IEC 2004 — All rights reserved


Copyright International Organization for Standardization
Provided by IHS under license with ISO
No reproduction or networking permitted without license from IHS
Not for Resale

3.222751e-002, 1.180834e-002, -4.260899e-002, 1.180834e-002, 3.459834e-002, 3.699401e-002, 7.811437e-002, -1.148931e-002, 2.451398e-002, 3.366932e-002, 2.490099e-002, 3.366932e-002, 1.069569e-001, -6.792472e-002, 2.935103e-002, 8.089376e-002},
{3.302116e-004, -4.383129e-004, -4.483801e-003, 2.133815e-003, 4.169312e-003, -2.764274e-003, -3.560193e-003, -5.667345e-003, 1.828484e-002, -5.667345e-003, -3.560193e-003, -2.764274e-003, 4.169312e-003, 2.133815e-003, -4.483801e-003, -4.383129e-004, -6.572258e-003, -8.043609e-003, -1.367344e-002, -2.057101e-004, 4.909477e-003, -1.849635e-002, -1.027646e-002, 3.047000e-002, 1.580113e-002, 1.341244e-002, -8.374319e-003, 2.184338e-003, 1.006662e-002, 9.032846e-003, -7.048642e-003, -3.858679e-003, -1.527093e-003, -7.961490e-003, -8.492364e-003, 4.044692e-003, -1.619485e-003, -2.642273e-003, 1.374742e-002, -1.318664e-002, 2.872635e-002, -1.170359e-002, -1.209726e-002, 1.154452e-002, -1.253778e-002, 6.177284e-003, -8.481035e-003, -9.725341e-003, 6.733426e-003, 2.338419e-002, 2.049454e-002, -1.883139e-002, 9.883711e-003, 1.052675e-002, -1.810009e-002, -1.845458e-002, 8.610305e-004, -2.236020e-002, 3.196510e-002, -2.786517e-003, 1.046986e-003, 7.416639e-003, 1.015271e-002, -1.130845e-003, 6.672465e-003, -1.550385e-002, -2.693150e-002, -9.307748e-003, 1.591427e-003, 1.902114e-002, -1.141333e-002, -7.799098e-003, 2.568086e-002, -8.656613e-003, 4.913366e-002, -8.226390e-003, 3.798539e-004, -5.843547e-003, 1.656538e-003, 1.794119e-002, 4.345443e-003, 1.079504e-002, -1.402696e-002, 1.421903e-002, -1.760642e-002, -1.531897e-002, -1.509543e-002, -1.962100e-002, -2.154501e-002, -1.528147e-002, -1.037459e-003, -6.314652e-003, 9.760753e-003, -3.048883e-002, -1.040418e-003, -3.989787e-002, -2.710323e-002, -8.332018e-003, 1.748204e-002, 2.702204e-003, -9.394406e-003, -3.027670e-002, -3.241122e-002, 9.506345e-003, 2.831619e-002, -6.934148e-003, -2.849537e-003, 7.475955e-003, 8.789856e-003, -3.011850e-002, -1.392654e-002, -7.187933e-003, 5.291959e-003, -2.252097e-002, -6.692854e-003, -1.406713e-003, 1.449777e-002, -2.831390e-002, -2.234677e-002, -4.004586e-002, 1.747422e-002, -2.354745e-002, 9.315421e-003, 2.705551e-002, 2.874223e-002, -1.056491e-002, 3.442764e-002, 2.296024e-002, -3.414684e-003, -2.491975e-003, -1.299621e-002, 7.821001e-003, -3.581469e-003, 7.821001e-003, -1.299621e-002, -2.491975e-003, 7.283084e-003, 2.333009e-003, 1.227250e-002, -3.466885e-002, -7.836430e-003, 1.073037e-002, -3.099659e-002, 1.118158e-002, -3.427849e-002, -2.561919e-002, 3.837442e-002, -2.244775e-002, 3.721020e-003, -1.274375e-001, 5.901632e-002, 4.036399e-002, -9.306162e-003, -9.773539e-002, -1.808835e-002, -6.744605e-002, -6.662323e-002, 8.038818e-002, 7.298581e-002, 1.035801e-001, -9.664922e-003, 1.305263e-003, -5.190809e-003, 7.491013e-003, 4.978981e-002, 7.491013e-003, -5.190809e-003, 1.305263e-003, 1.229849e-002, -1.610178e-002, 7.371653e-002, 6.406258e-002, 6.341759e-003, -4.091355e-002, -3.984640e-002, -2.045118e-002, 3.725449e-002, -1.408875e-002, -7.484202e-002, 5.976545e-002, 1.417248e-002, -3.295739e-002, -5.224478e-002, 3.152412e-002, 1.447345e-002, -2.804480e-002, 4.960446e-002, 1.289803e-002, 4.578178e-002, 4.886804e-004, -1.952693e-002, 4.429574e-004, 3.885419e-003, 4.830568e-003, 2.918365e-003, 4.591691e-003, 1.899927e-003, 4.591691e-003, 2.918365e-003, 4.830568e-003, 2.691843e-002, -2.223659e-002, -4.947456e-002, -3.227741e-002, -6.947768e-002, 4.449300e-002, 1.939076e-002, 1.488087e-002, -3.893594e-002, -3.018645e-002, -5.689284e-002, 4.750648e-002, 5.362532e-002, 1.200411e-002, 6.345477e-003, -1.768928e-002, -5.171735e-004, 4.762313e-002, -4.658673e-002, 1.993114e-002, -4.629619e-002, -6.671534e-002, 2.782035e-002, -1.499081e-002, 9.524399e-003, -3.280396e-003, 6.097334e-003, -4.073719e-004, -4.556584e-003, -4.073719e-004, 6.097334e-003, -3.280396e-003, 4.378007e-002, 1.325947e-002, 2.130196e-002, 3.934346e-002, 8.183279e-002, -5.363934e-002, 2.281453e-002, 1.485282e-002, 4.983297e-003, 8.293799e-002, -3.877083e-002, 2.930071e-002, 6.832425e-002, -1.031067e-002, 4.550572e-002, -3.634014e-002, -1.163728e-002, 5.224834e-002, 2.609116e-002, -2.397783e-002, -3.327819e-002, 6.347910e-003, 1.901414e-002, -7.862617e-002, 1.487833e-002, 3.486599e-003, 1.814942e-002, 3.486599e-003, 8.092436e-002, 1.568053e-001, 1.778303e-001, -1.374638e-001, -3.375389e-002, 2.150100e-002, 9.752068e-002, 2.150100e-002, -7.761652e-002, 3.602279e-002, -1.173310e-002, -1.947677e-001, 3.755764e-002, 3.687487e-002, -2.145834e-001, 3.687487e-002, -4.926728e-002, 9.861524e-002, -5.730488e-002, -4.752742e-002, -1.486878e-002, 2.909414e-002, -1.014962e-001, 2.909414e-002, -3.226234e-002, 1.324211e-001, 2.420972e-002, -9.350159e-003, -1.146963e-002, 1.324440e-002, -8.458934e-002, 1.324440e-002, -6.746796e-002, 7.219686e-002, -8.434493e-002, -9.973960e-002, 2.693050e-002, 1.015934e-003, 1.567788e-001, 1.015934e-003, -1.390718e-002, -3.291888e-002, 2.974047e-001, -8.754867e-002, -2.351027e-002, -1.444295e-003, -1.691646e-003, -1.444295e-003, -4.315654e-002, 1.478709e-002, 6.741760e-002, 6.997181e-002, -8.843515e-003, 2.943321e-002, -9.215242e-003, 2.943321e-002, -3.542181e-002, 2.727306e-002, -1.070204e-001, 1.134045e-001, -3.392430e-003, -4.491640e-003, 1.002055e-001, -4.491640e-003, 7.556905e-002, -1.936875e-001, 5.517547e-002, -1.288091e-001, -4.641547e-003, -3.420950e-002, 1.175958e-001, -3.420950e-002, 2.884868e-002, 1.221159e-001, 1.221242e-001, 6.833065e-002, -2.304865e-003, -4.746612e-002, 9.675501e-002, -4.746612e-002, 5.673929e-003, -3.010578e-002, 9.693825e-002, 1.239665e-002, -1.411717e-002, -2.412031e-002, 6.640424e-002, -2.412031e-002, -8.447218e-003, 1.049898e-002, -1.024729e-001, -2.519631e-001, 1.491286e-002, -4.516939e-003, 4.592554e-002, -4.516939e-003, 6.606769e-002, 6.516412e-002, -8.514482e-002, -6.610612e-002, -2.993466e-003, -9.039345e-003, -4.002984e-002, -9.039345e-003, 4.005831e-002, 1.305086e-001, -1.698973e-001, 7.562447e-002, -


© ISO/IEC 2004 — All rights reserved

Copyright International Organization for Standardization
Provided by IHS under license with ISO
No reproduction or networking permitted without license from IHS
Not for Resale

4.468362e-003, -3.223374e-003, 1.050493e-003, -3.223374e-003, -3.048335e-002, 7.328250e-002, -5.564374e-002, 1.010173e-002, 3.041479e-002, -1.715520e-002, 9.014251e-003, -1.715520e-002, 1.068351e-002, -7.919018e-002, 9.086225e-002, -1.058241e-001}, {7.642679e-005, -2.039295e-004, -3.732629e-003, 1.124421e-003, -4.821472e-003, 4.596289e-004, 5.865667e-003, -1.087739e-003, 1.654066e-002, -1.087739e-003, 5.865667e-003, 4.596289e-004, -4.821472e-003, 1.124421e-003, -3.732629e-003, -2.039295e-004, 5.569208e-003, 5.133014e-003, -2.975199e-003, 1.916689e-002, -1.404282e-003, -1.014680e-002, 2.158364e-003, 1.608276e-002, 1.196082e-002, 1.629578e-002, 1.913289e-002, -1.319525e-002, -3.195772e-002, -5.719698e-003, 5.369757e-003, -2.869099e-004, 1.092712e-002, 1.914373e-002, -1.376202e-002, 3.190972e-002, 2.593955e-002, 9.230111e-003, -6.469408e-003, 6.673923e-003, 1.248439e-002, -1.083228e-002, 5.659759e-003, -5.980553e-003, -3.686077e-003, 1.085076e-002, 2.216446e-002, 2.070393e-002, 1.367045e-002, 4.651655e-003, 4.734034e-003, 1.653032e-002, -1.872359e-002, -2.341380e-002, -1.630512e-002, 4.448706e-004, -1.562787e-002, -1.968652e-002, 4.302407e-003, 2.871255e-003, -2.051020e-002, 7.894655e-004, -1.117227e-002, -8.157314e-003, 1.512127e-002, -1.532437e-002, -8.449306e-003, 6.253231e-003, -1.464032e-002, 2.008510e-003, -1.201738e-002, -3.291897e-002, -2.439030e-003, 4.266950e-002, 1.580976e-002, -6.620539e-003, -1.849511e-002, -1.674960e-002, 6.055719e-003, 2.231751e-002, -2.218817e-002, -5.177557e-003, -8.306578e-004, -3.015663e-002, -4.523391e-002, -1.272756e-002, 1.258058e-002, 1.688589e-002, 1.899183e-002, 2.091013e-002, 2.783388e-004, -5.186895e-002, -3.104965e-002, -1.776100e-002, -1.543240e-002, -1.910784e-002, 1.826287e-003, -3.274983e-002, -1.072650e-002, 1.168633e-002, 6.393071e-003, -5.925239e-002, 1.132302e-002, -3.649450e-002, 3.707237e-002, 7.784355e-003, -4.177555e-002, 4.589219e-003, -5.834767e-003, -1.116813e-003, -1.462312e-002, -1.442965e-002, -2.806249e-002, 2.297574e-002, -6.308490e-003, 1.502071e-002, 5.420589e-002, 2.718280e-002, 4.021907e-002, 2.479598e-002, -5.357388e-002, -1.349639e-002, -2.645382e-002, 6.623386e-003, -2.955763e-003, -3.334173e-003, -8.264849e-003, 3.915811e-003, 2.078845e-004, 5.333515e-003, -1.401313e-002, -1.130747e-003, -4.411384e-004, -1.130747e-003, -1.401313e-002, 5.333515e-003, 4.725667e-003, -2.859755e-002, -1.216005e-002, -6.587563e-003, 7.898962e-002, -4.840402e-002, 1.610264e-002, -3.453090e-002, 9.463318e-003, 6.595351e-003, -1.304045e-002, 2.903734e-002, -8.479029e-002, -6.309179e-002, 6.603836e-002, 8.389422e-002, -1.371468e-002, 3.483784e-002, 9.239264e-002, 3.206143e-002, -1.386641e-002, -2.294396e-002, 2.709259e-002, -2.630993e-002, -2.336622e-004, 5.348864e-003, 1.730478e-002, 3.049916e-003, -2.350127e-002, 3.049916e-003, 1.730478e-002, 5.348864e-003, -2.933472e-002, -1.062798e-002, -1.439541e-002, -1.623151e-002, 2.551534e-002, 7.426170e-002, 2.903271e-002, 5.096664e-004, -1.248981e-002, -4.333276e-002, 2.415532e-002, -9.048066e-003, -2.559929e-002, 7.441921e-002, -1.018481e-002, 4.609115e-002, 3.617411e-002, -1.486507e-002, 1.385331e-002, -1.151949e-001, 2.819561e-002, 1.461191e-001, 2.243565e-002, 2.333520e-002, 1.271003e-003, 9.312049e-004, 1.783324e-002, -1.467542e-002, -4.950451e-002, -1.467542e-002, 1.783324e-002, 9.312049e-004, -3.336562e-003, -3.566290e-002, 1.757411e-004, 2.948453e-002, 4.641890e-002, -3.543880e-002, 7.275938e-003, -5.796638e-003, -1.727654e-003, 1.719679e-002, 1.518274e-002, -1.102811e-002, 1.574948e-002, -4.400382e-002, -3.505457e-002, -4.149106e-002, 4.246117e-003, -7.223710e-003, -9.241564e-003, 1.009212e-001, -2.100393e-002, 1.634386e-002, 1.678514e-002, 1.816716e-002, -1.168798e-003, -5.427736e-003, -7.695269e-003, 1.189160e-002, -8.135690e-002, 1.189160e-002, -7.695269e-003, -5.427736e-003, -3.126361e-002, 1.695920e-002, -5.054204e-002, -3.019357e-002, 3.557845e-002, -4.425564e-002, 9.479757e-003, -2.531380e-002, -2.217121e-002, -4.290533e-002, -1.161869e-001, -3.561697e-002, -1.531198e-001, -4.857870e-002, 2.672335e-002, 2.272702e-002, -7.613858e-004, 6.678282e-002, 7.051908e-003, 2.406027e-002, 4.927238e-002, 2.950392e-002, 2.102064e-002, 8.547292e-002, -5.468348e-003, -1.801172e-003, 4.191890e-002, -1.801172e-003, 2.440530e-002, -3.816507e-002, -7.440982e-002, -4.714690e-004, 5.836041e-003, -7.270190e-002, 1.401576e-001, -7.270190e-002, -2.574421e-002, 7.043083e-002, 2.264174e-002, 1.605578e-001, 9.265873e-003, 1.436390e-002, -2.733742e-001, 1.436390e-002, -2.469704e-002, 9.778548e-002, -6.831734e-002, -1.711574e-001, 1.277365e-002, -4.492107e-002, 7.613069e-002, -4.492107e-002, -2.019498e-002, 7.859178e-002, -6.153197e-002, -1.032838e-001, 1.312008e-003, 1.104293e-002, -3.810146e-002, 1.104293e-002, -1.180254e-001, -3.647855e-002, 1.215016e-001, 4.633602e-002, -1.471817e-003, 3.297927e-002, -6.995459e-002, 3.297927e-002, -4.977123e-002, 1.265342e-001, -3.317918e-002, -1.480454e-001, -2.862481e-002, -3.220532e-003, -2.353050e-002, -3.220532e-003, -5.305051e-002, 6.278080e-002, -2.043627e-001, -5.131347e-002, 6.351628e-003, -8.647782e-003, -1.348275e-002, -8.647782e-003, 6.938312e-002, 1.911468e-002, 2.566856e-002, 1.493610e-001, 2.053132e-002, 8.550835e-004, 7.254890e-002, 8.550835e-004, 9.453472e-002, -3.015171e-001, -3.639303e-002, 1.932666e-001, 4.828536e-003, 8.588686e-003, -1.299947e-001, 8.588686e-003, -1.779605e-002, -8.186291e-002, 8.582037e-002, 8.684533e-002, 6.834952e-003, 1.935528e-002, 7.568251e-002, 1.935528e-002, 3.999978e-002, 3.064942e-002, 1.788808e-001, -1.344219e-001, -1.237227e-002, 1.453834e-002, 1.213744e-001, 1.453834e-002, -3.596101e-002, 4.652789e-002, -3.660439e-002, -6.977622e-002, -1.387375e-002, 4.655982e-003, 4.084032e-002, 4.655982e-003, -7.430180e-002, 1.282163e-002, 4.819787e-002, 8.947009e-002, -1.021511e-002, -1.820304e-003, -6.168268e-002, -1.820304e-003, 1.517720e-003, 1.146228e-002, 2.302239e-002, 9.969569e-002,

© ISO/IEC 2004 — All rights reserved


--`,,```,,,,````-`-`,,`,,`,`,,`---

Copyright International Organization for Standardization
Provided by IHS under license with ISO
No reproduction or networking permitted without license from IHS
Not for Resale

6.058039e-003, 4.124809e-002, -5.299279e-002, 4.124809e-002, 1.470189e-003, 1.922349e-001, 3.223163e-002, -2.394931e-002, -1.689517e-003, 8.856775e-004, 9.344872e-002, 8.856775e-004, 4.904705e-002, 6.214550e-003, -4.820982e-002, 1.498347e-002},
{-5.253501e-004, 2.452331e-003, 1.675158e-003, -5.879795e-003, 2.803388e-003, 5.984049e-003, -5.214610e-003, 5.593892e-004, -1.287383e-002, 5.593892e-004, -5.214610e-003, 5.984049e-003, 2.803388e-003, -5.879795e-003, 1.675158e-003, 2.452331e-003, 4.861013e-003, 9.413447e-004, 1.154394e-003, -1.158960e-002, 3.484202e-003, 1.061837e-003, 8.914687e-003, 1.917246e-003, -1.488437e-002, -2.095879e-003, -4.727978e-003, 3.749466e-003, -2.300884e-003, 2.795011e-004, 2.835549e-003, -2.607352e-004, 3.022871e-003, 1.703013e-002, 1.639777e-003, -9.838134e-003, -9.679197e-003, 2.643424e-003, -2.322141e-002, -2.868411e-003, -2.318556e-002, -8.542915e-003, -5.501511e-004, -4.457175e-003, -1.919136e-002, 3.970767e-003, 8.708537e-003, -1.397010e-002, 4.021128e-003, 2.883795e-003, -1.128890e-002, 1.718269e-003, 3.317877e-003, -1.181007e-002, 2.152708e-002, -1.966033e-002, 2.371503e-002, 2.245242e-002, 1.798408e-002, -6.458982e-003, 1.449352e-003, 1.424968e-002, 1.319384e-002, -1.143618e-002, 5.366720e-003, -1.250735e-002, -6.477542e-003, -3.340602e-003, -2.717345e-002, -4.283292e-002, -2.022674e-002, -2.389063e-002, -7.988992e-004, -2.009587e-002, -3.491280e-002, -1.305200e-002, -1.938859e-002, 7.138925e-003, -5.924868e-003, -4.699228e-002, -7.344741e-003, 1.933987e-002, 8.443754e-003, 1.426854e-003, -2.884598e-003, 1.119377e-002, 3.280558e-002, 4.627649e-003, 3.882868e-002, 2.242905e-002, 8.471542e-003, 4.841279e-003, 1.822798e-002, -1.987578e-002, -1.197491e-003, -2.281657e-002, 2.568592e-003, -1.354639e-003, -2.449266e-002, -8.316503e-003, -1.563815e-002, 4.349952e-002, 1.620041e-002, 6.453616e-002, -1.940848e-003, 1.561482e-002, 9.903531e-003, 4.116650e-002, 1.975831e-002, -8.077160e-003, 2.099306e-003, -1.891588e-002, 3.666416e-002, 1.339407e-002, 8.574986e-003, -3.267463e-002, -2.907741e-002, 5.096303e-003, 1.948881e-002, 9.353756e-003, -2.063975e-002, 2.961645e-002, 3.108661e-002, 4.028237e-002, -2.049753e-002, -2.714209e-002, -1.028093e-002, -2.040246e-002, 2.648776e-003, -1.256501e-002, 1.165645e-004, -1.248585e-002, -2.622798e-002, -1.248585e-002, 1.165645e-004, -1.256501e-002, -1.439124e-002, 5.197928e-003, -1.966117e-002, 8.434625e-003, -1.674081e-002, -2.748908e-002, -4.935747e-003, 2.170193e-002, -2.765286e-002, 3.338467e-002, 2.446968e-002, 6.205115e-002, -5.746327e-002, 1.786225e-002, 6.511351e-002, 2.441608e-002, -4.031172e-002, 1.459955e-002, 3.487098e-002, -3.551249e-002, -7.318380e-002, -1.786153e-002, 5.858716e-004, -2.381359e-002, 4.191961e-003, -1.076908e-002, -1.638454e-002, -1.495233e-002, -3.650037e-003, -1.495233e-002, -1.638454e-002, -1.076908e-002, -1.082412e-002, -1.279872e-002, 2.806486e-002, -8.479130e-002, 9.434438e-003, -3.839608e-002, -7.819175e-003, -2.687067e-002, 1.764310e-002, 6.015658e-003, 7.559012e-002, -1.976459e-003, 8.745531e-002, 7.173837e-002, -2.291230e-002, 3.943920e-002, 1.202239e-002, 2.084196e-002, 4.496145e-002, -8.839222e-002, 1.863218e-002, -1.189731e-002, 1.507191e-002, 1.308449e-002, -5.742351e-003, 1.349922e-003, 1.381913e-002, -1.668389e-003, -3.700547e-002, -1.668389e-003, 1.381913e-002, 1.349922e-003, 6.572807e-003, -5.105239e-002, -4.093124e-002, 1.750649e-002, 2.733339e-002, 2.460745e-002, 2.593728e-002, 1.812935e-003, -1.947718e-002, -4.122495e-002, 1.125834e-004, 1.032576e-002, -1.053263e-001, 4.237985e-002, 5.628855e-002, 5.607213e-002, 9.822005e-003, -5.310547e-003, 4.887684e-003, 1.250530e-002, 1.309019e-001, -1.113222e-001, 3.861436e-002, 9.344481e-003, -1.623736e-003, 4.466844e-003, 2.322642e-004, 1.875004e-003, -2.933929e-002, 1.875004e-003, 2.322642e-004, 4.466844e-003, 2.180386e-002, -8.567725e-003, -4.192859e-002, -1.936823e-002, 3.138233e-002, -2.121184e-002, 1.028918e-002, 9.551630e-003, 1.914411e-002, 3.178726e-002, 5.413972e-002, -5.948907e-002, 5.191280e-002, -1.825666e-002, 6.024376e-002, 1.538567e-002, -3.115154e-003, -2.494834e-003, 1.744264e-003, 9.874147e-003, 8.666551e-002, -1.879156e-002, 4.712747e-002, 3.470460e-003, 1.692192e-003, 6.548809e-003, 7.884153e-002, 6.548809e-003, 3.462503e-002, -3.837030e-002, -1.278117e-001, 2.842566e-002, -6.808562e-003, -2.690930e-002, 1.965516e-001, -2.690930e-002, 8.055228e-002, 1.549411e-001, -3.678546e-002, -2.043148e-001, 1.596374e-002, 4.977373e-002, -3.215195e-003, 4.977373e-002, -4.229499e-003, -1.223665e-003, -6.060216e-002, -1.184573e-002, -1.683856e-002, 2.069089e-002, 1.578700e-002, 2.069089e-002, -2.234272e-002, 6.289061e-003, -1.913764e-001, -6.474220e-002, -1.713300e-002, 2.243362e-002, 4.839305e-002, 2.243362e-002, -9.781697e-003, -1.289610e-002, 6.811367e-002, 7.628336e-003, 2.489814e-002, 2.049570e-002, -6.989708e-002, 2.049570e-002, -2.063258e-002, 1.146803e-001, 3.029261e-001, -3.692597e-003, 1.247267e-003, 3.272500e-002, 1.560481e-001, 3.272500e-002, 1.837893e-002, -1.330366e-001, -2.237334e-001, 4.354898e-003, 3.819518e-003, 6.992354e-003, 3.271813e-002, 6.992354e-003, -5.385801e-002, 3.999123e-002, 5.630262e-002, 6.377563e-002, -2.771017e-003, -3.448764e-002, 4.937653e-002, -3.448764e-002, 7.616659e-002, -1.928490e-001, -1.731083e-002, 1.709667e-001, -9.713538e-003, -5.612452e-003, 7.198169e-003, -5.612452e-003, -7.029831e-002, 4.869010e-002, -4.169599e-002, 6.433473e-002, -2.459358e-002, -2.347302e-002, 1.229176e-001, -2.347302e-002, 2.508282e-003, -1.066434e-001, -3.028719e-002, -9.441320e-002, 1.089818e-002, -4.152810e-004, 7.325712e-002, -4.152810e-004, -1.718525e-001, 4.481215e-002, 8.840289e-002, 6.546707e-002, 2.360782e-002, -2.122451e-002, 4.184468e-002, -2.122451e-002, 5.234255e-002, -2.463012e-002, 6.471441e-002, -1.093824e-001, -1.686562e-002, -1.883460e-002, 5.072521e-004, -1.883460e-002, -2.516392e-003, 3.199025e-002, 1.801156e-001, -8.501062e-002,


© ISO/IEC 2004 — All rights reserved

Copyright International Organization for Standardization
Provided by IHS under license with ISO
No reproduction or networking permitted without license from IHS
Not for Resale

1.501650e-002, 1.103395e-002, -1.344371e-001, 1.103395e-002, 4.160875e-002, 6.994748e-002, -1.322998e-001, 8.638438e-002, -2.944839e-003, -1.504073e-002, 8.394838e-002, -1.504073e-002, -1.821689e-001, 1.403117e-001, -1.545254e-001, -7.497318e-003},
{-5.358127e-004, -5.771322e-004, -9.313819e-004, -2.374085e-004, -5.076633e-004, 1.346562e-003, 5.173696e-003, -1.480581e-002, 3.373397e-003, -1.480581e-002, 5.173696e-003, 1.346562e-003, -5.076633e-004, -2.374085e-004, -9.313819e-004, -5.771322e-004, -9.145901e-004, -1.544392e-004, 1.308257e-002, -3.561586e-003, 7.465739e-003, 8.052533e-003, -9.770660e-003, -1.031014e-002, 2.044968e-003, 2.319703e-002, 1.473450e-002, 3.352321e-003, 9.789991e-003, -6.362241e-003, 2.368484e-004, -4.364655e-004, -1.907115e-003, -2.030472e-003, 1.120828e-004, 1.694354e-002, 1.644051e-002, 8.227675e-003, -3.495553e-003, 2.299615e-002, 5.947161e-003, -3.516807e-002, 1.803499e-002, 5.457588e-003, 4.317638e-003, 5.675201e-003, -6.273336e-003, 8.518638e-003, 8.761089e-003, 9.723591e-003, -1.722063e-002, 3.652310e-002, 1.836574e-002, -1.730862e-002, -9.400723e-003, -2.225640e-002, 5.370121e-003, 2.741224e-002, 2.259393e-002, -4.496056e-003, -5.747582e-003, -1.898760e-002, -1.009396e-002, -1.815217e-002, -9.822617e-003, 2.399023e-002, 1.026891e-002, -1.066515e-002, -4.182344e-002, -7.648326e-003, -2.612231e-002, 8.820559e-003, -1.523434e-002, -3.176037e-002, -2.803368e-002, -3.842942e-003, -1.543561e-002, -1.997787e-002, 2.186476e-002, 1.306297e-003, 9.821558e-003, -3.210276e-003, 2.305158e-002, 1.772037e-002, -1.347618e-002, -1.592463e-002, -2.733150e-002, 4.345234e-003, 2.803432e-002, 1.890760e-002, -8.291941e-003, -1.280668e-002, 1.100628e-002, -6.823825e-003, 8.507567e-003, 1.895644e-002, 3.852950e-003, 1.694376e-002, 1.198528e-002, 3.447541e-003, -3.268353e-003, -2.429769e-002, -4.041145e-003, -9.106378e-005, 5.006548e-003, 2.892348e-002, 1.563012e-002, -3.903745e-002, -8.586701e-003, 9.820973e-003, 2.447020e-002, 6.137488e-004, 1.332854e-002, 3.032000e-002, 2.679136e-002, 1.097333e-002, -1.627317e-002, 3.702218e-002, -3.055571e-002, -1.247441e-003, -1.006875e-002, 6.298687e-003, 5.713019e-002, -6.722479e-003, -1.030279e-002, -2.110994e-003, -1.246922e-003, 2.622944e-002, 1.455788e-003, 9.831408e-003, -6.264046e-003, 3.343414e-003, -2.799119e-002, 3.343414e-003, -6.264046e-003, 9.831408e-003, -1.162678e-002, -2.630927e-002, -1.029815e-001, -3.675906e-002, -4.554915e-004, -8.399726e-002, 4.565418e-002, 8.330581e-003, 3.585975e-002, -3.423040e-002, 8.405481e-003, 6.096102e-002, -7.881220e-002, -5.182616e-003, -1.397440e-002, -4.856239e-002, -3.237624e-002, -7.683589e-002, 4.504979e-002, -8.919622e-002, 1.902416e-001, 2.286060e-001, 4.524268e-002, -2.137993e-002, 3.738925e-003, 6.267362e-003, 7.504496e-003, 7.278675e-003, -2.961706e-002, 7.278675e-003, 7.504496e-003, 6.267362e-003, 6.738945e-003, -4.255123e-002, 3.708249e-002, -4.053623e-002, -5.504318e-002, -6.086548e-002, 8.487492e-003, 4.125451e-004, -2.162924e-002, -1.579701e-002, -3.438219e-002, -4.434722e-002, -3.623474e-002, 3.422380e-002, 3.836926e-002, 3.900427e-002, -5.923380e-003, 8.844018e-003, 2.327604e-002, 1.137973e-001, 2.998499e-002, -3.395457e-002, -9.419940e-003, -1.080435e-001, -3.104278e-004, -3.753151e-003, 6.839973e-003, -1.216634e-002, 6.094440e-002, -1.216634e-002, 6.839973e-003, -3.753151e-003, 2.178130e-003, 1.496431e-002, 4.098068e-002, 8.056676e-002, -1.064879e-001, -5.610231e-002, 1.007149e-002, -8.048147e-003, -3.144572e-003, 1.591641e-002, -1.053128e-002, -6.912208e-003, -3.385958e-002, 1.901260e-003, -1.640621e-002, -2.342351e-002, -5.817504e-003, 1.011836e-002, -2.780797e-002, 5.909969e-002, -1.000493e-001, -3.187239e-003, 7.875956e-002, 9.530150e-003, -5.420097e-003, 2.320712e-003, 5.959849e-003, 2.010994e-003, 4.115186e-002, 2.010994e-003, 5.959849e-003, 2.320712e-003, 2.961295e-002, -7.276130e-004, -3.676874e-002, -9.391016e-002, 5.109941e-003, 3.262488e-002, -2.677284e-003, 4.232258e-003, -1.236483e-002, -2.362823e-002, -1.885497e-002, -3.988719e-002, -4.791738e-002, -5.599583e-002, 1.195593e-001, -2.206686e-002, -3.311042e-002, -4.733707e-002, 1.554649e-002, -8.092135e-002, 3.454939e-002, 4.083822e-002, 9.477578e-002, -7.450631e-002, -5.848997e-003, 1.834149e-002, 2.347703e-002, 1.834149e-002, -6.043216e-002, 1.408245e-001, -5.780357e-002, 1.542531e-001, -2.827798e-003, 2.733234e-002, -5.936602e-002, 2.733234e-002, 8.400512e-003, -3.310502e-002, 2.278982e-002, -1.698794e-003, 8.933885e-004, 1.497683e-003, -8.361802e-002, 1.497683e-003, 8.681786e-003, -1.900472e-001, 4.203179e-002, 1.499584e-001, -1.401448e-002, -5.664175e-003, 1.059817e-001, -5.664175e-003, -8.772960e-002, 4.528680e-002, -7.259085e-002, 7.791247e-002, 1.889725e-003, 7.675738e-003, -2.292493e-002, 7.675738e-003, 3.858964e-002, 2.109636e-002, -1.172027e-001, 5.069775e-002, 8.242857e-003, 2.639564e-003, 5.761192e-002, 2.639564e-003, -3.218867e-002, 6.696772e-002, -1.614783e-001, -9.735153e-002, -3.707848e-002, 2.908784e-002, 2.191044e-002, 2.908784e-002, -7.617946e-004, 1.426326e-001, 3.515930e-002, -8.727727e-002, 5.393850e-002, -6.447103e-003, 8.863366e-002, -6.447103e-003, 3.004804e-002, 4.336664e-002, 2.305192e-001, 8.211979e-002, 2.078457e-004, -1.912971e-002, 4.695679e-002, -1.912971e-002, -4.039538e-002, -5.023384e-002, 3.428429e-004, 3.088827e-002, 4.170020e-003, 2.917413e-002, -4.887552e-002, 2.917413e-002, -1.811204e-001, 1.602562e-001, 4.184089e-002, 5.422770e-002, 5.299203e-003, 1.378873e-002, -1.224973e-001, 1.378873e-002, 9.830473e-002, -2.161220e-001, 6.131782e-002, -1.135072e-001, -3.987904e-002, -3.100982e-002, -5.361722e-002, -3.100982e-002, -7.533163e-002, -6.360497e-002, 6.243321e-002, 1.466262e-001, -7.076541e-003, 9.557817e-003, -7.343787e-002, 9.557817e-003, -7.229744e-002, 7.220319e-002, -6.963714e-002, 8.284541e-002, 2.388247e-003, -6.746688e-003, -7.377028e-002, -6.746688e-003, -1.631143e-002, 4.362353e-002, -7.938194e-002, 9.913022e-002,

© ISO/IEC 2004 — All rights reserved


Copyright International Organization for Standardization
Provided by IHS under license with ISO
No reproduction or networking permitted without license from IHS
Not for Resale

1.882774e-002, 1.168718e-002, -1.617669e-001, 1.168718e-002, 7.064790e-002, -5.386829e-002, -3.307776e-002, -1.730408e-001,
1.033200e-002, 1.737558e-003, -2.457194e-002, 1.737558e-003, -1.620109e-002, 4.822499e-002, 3.848303e-002, 6.780614e-003},
{3.424453e-004, 2.412288e-003, -5.118424e-003, -2.583101e-003, 3.155860e-003, -2.831156e-003, 1.009642e-002, 8.687851e-003, -
1.281699e-002, 8.687851e-003, 1.009642e-002, -2.831156e-003, 3.155860e-003, -2.583101e-003, -5.118424e-003, 2.412288e-003,
5.116400e-003, 3.867984e-003, 3.997211e-003, 3.947476e-003, -4.332119e-003, 2.191699e-003, -5.775355e-003, -8.866924e-004, -
6.004903e-003, -1.879172e-002, 3.180098e-003, 6.837397e-003, 3.774610e-004, 1.104819e-002, -3.949389e-003, 8.372156e-003,
2.529229e-002, -4.645883e-003, 9.821454e-003, 1.414803e-003, -1.224233e-002, -1.481368e-003, -1.111820e-002, -2.612735e-003, -
1.574805e-002, -1.266005e-002, 9.323347e-003, -1.029628e-002, -1.736153e-002, -1.730982e-002, 2.745349e-003, 6.210227e-003,
3.321437e-003, -1.748030e-003, 4.865403e-003, 1.322843e-002, 5.380144e-003, -7.373123e-003, -1.011895e-002, -2.838800e-002, -
1.582061e-002, -3.443393e-002, 1.264542e-002, 1.546525e-003, -9.561879e-003, -1.587906e-002, -3.924959e-003, -1.992379e-004, -
8.525269e-003, 5.410776e-003, -7.859900e-004, -1.609659e-002, -3.154264e-002, 1.088715e-002, -3.696028e-002, -1.480253e-003, -
2.285064e-002, -3.845840e-003, -3.742902e-002, -4.509159e-003, 1.086215e-003, -2.673237e-002, 1.029114e-002, -1.551116e-002,
8.963221e-003, -3.458520e-004, 2.576384e-002, -6.273975e-003, -1.020666e-002, 2.323005e-002, -4.337661e-003, -1.830179e-002, -
4.145467e-002, -1.423701e-002, 1.153641e-002, 1.469623e-002, -3.372729e-002, 1.173278e-002, -1.376537e-002, -1.468953e-002, -
5.763097e-003, 3.774412e-002, 3.789360e-002, 7.680941e-003, -7.383406e-003, 1.530427e-003, 4.923491e-003, 3.642281e-003,
1.569212e-003, 5.482247e-003, 4.237566e-002, 2.839616e-002, 2.642347e-002, 3.459623e-002, -1.408808e-002, 1.152970e-002, -
1.267803e-002, -8.200218e-003, 2.036938e-002, -5.316437e-004, 2.758052e-002, 1.040211e-002, -1.220480e-002, -2.575411e-002, -
1.502923e-002, -8.337183e-003, 2.108517e-002, 3.461267e-002, 1.325721e-002, 2.045707e-002, -2.115873e-002, 5.988105e-006,
1.495116e-003, 6.631596e-003, 2.910131e-003, 9.726471e-004, 1.398669e-002, 9.726471e-004, 2.910131e-003, 6.631596e-003, -
2.240709e-002, -6.652321e-003, 1.581955e-003, 2.495502e-002, 1.887611e-002, -2.585319e-002, 3.012862e-002, 1.741761e-002,
4.311065e-002, 2.229875e-002, -1.266157e-002, 7.928121e-002, 5.936580e-002, 4.929474e-002, 7.364088e-002, 9.602347e-002,
1.612119e-002, -8.926352e-002, 1.297135e-002, -8.663658e-002, 3.601250e-002, 8.654914e-002, -1.375940e-001, 4.668743e-002,
1.505540e-003, 2.731936e-003, -3.504904e-003, 5.645655e-004, 2.542701e-002, 5.645655e-004, -3.504904e-003, 2.731936e-003, -
3.520735e-002, -2.020782e-003, -4.428033e-002, 1.589138e-002, 5.282675e-002, -9.268585e-003, 2.952413e-002, -1.383773e-002, -
3.209896e-002, -3.221828e-003, -5.497367e-002, 4.199107e-002, -3.447309e-002, 4.605719e-002, 2.703639e-002, -3.892776e-002,
7.417545e-003, -3.927656e-003, -9.616328e-002, 6.848049e-002, -2.561030e-002, -3.744082e-002, -4.112827e-002, -3.624393e-002, -
1.494042e-003, -7.652813e-004, -2.709811e-003, -1.213151e-002, -8.484306e-003, -1.213151e-002, -2.709811e-003, -7.652813e-004,
1.114428e-003, -2.567953e-002, 1.969106e-002, -3.725497e-003, 1.199261e-002, -6.361358e-002, 5.944540e-002, -2.406158e-002, -
1.869061e-002, 3.529597e-002, -5.322044e-002, 1.179479e-001, 2.049463e-002, 5.078203e-002, -1.679393e-002, 3.164185e-002, -
3.936097e-002, -1.442972e-002, -4.034194e-002, 1.005614e-001, -1.036698e-001, 3.794625e-002, -1.058365e-001, 3.029406e-002, -
1.164169e-003, -6.927087e-003, 1.445414e-002, 2.479458e-003, -2.380018e-002, 2.479458e-003, 1.445414e-002, -6.927087e-003,
1.744099e-002, -1.147623e-002, -1.109857e-002, -2.597002e-002, 6.772508e-002, -6.857598e-004, 1.306231e-003, 2.721439e-003,
2.764002e-002, 4.761548e-002, 2.355360e-002, 4.824332e-002, 9.125234e-002, 3.888008e-002, -4.799832e-002, -5.175577e-002, -
2.295567e-002, -5.641355e-002, 1.411903e-002, -1.747645e-002, 6.660514e-002, 1.305160e-002, 3.102068e-002, -2.742095e-002,
1.287560e-002, -2.437466e-002, -1.972644e-002, -2.437466e-002, -4.847649e-002, -3.168073e-003, -1.874713e-001, 6.339875e-003, -
1.608225e-002, 3.221745e-002, -3.152740e-001, 3.221745e-002, -8.447995e-003, -3.115237e-002, -4.956882e-002, 4.228283e-003, -
8.256907e-003, 5.833640e-002, -2.959886e-001, 5.833640e-002, 2.012197e-003, -1.350272e-001, 5.336246e-003, 7.135466e-002,
1.181342e-002, -3.463217e-002, -1.370354e-002, -3.463217e-002, 6.530484e-002, -3.752417e-003, 2.495251e-001, 2.451651e-002, -
5.920206e-003, 1.080613e-002, -3.707210e-002, 1.080613e-002, -3.895374e-003, -3.351504e-002, -8.988449e-002, -3.581456e-002,
1.062197e-002, 8.757460e-003, -5.624856e-002, 8.757460e-003, -4.178852e-002, 4.492766e-002, 2.532508e-001, -1.679049e-001,
1.303267e-002, -3.709746e-002, 5.588335e-002, -3.709746e-002, 5.023440e-002, 4.553059e-002, -7.827410e-002, 3.428120e-002, -
1.508364e-002, 3.690646e-003, -5.386950e-002, 3.690646e-003, 1.531866e-002, -7.220316e-002, -6.326241e-002, 2.025700e-002, -
4.706681e-003, 4.532795e-003, 3.173601e-002, 4.532795e-003, -1.675594e-002, 9.852302e-002, -4.337325e-002, -2.920874e-002, -
3.350537e-003, 8.500798e-003, 4.772108e-002, 8.500798e-003, -2.856860e-002, 7.844127e-003, -9.590836e-002, -1.577464e-001, -
1.533008e-002, -4.890388e-003, 3.595005e-002, -4.890388e-003, -1.282820e-002, -5.573735e-003, 1.038646e-001, 7.341909e-002, -
2.446606e-002, 2.948749e-002, -6.746858e-003, 2.948749e-002, -6.996674e-002, 1.231605e-001, 7.901491e-002, 8.519859e-002,
2.439883e-003, 6.470710e-003, 8.379497e-002, 6.470710e-003, 2.966408e-002, -9.518342e-002, 1.909415e-002, 2.886267e-002,
4.123293e-003, -8.097746e-003, -7.301991e-003, -8.097746e-003, -1.504117e-002, -5.858626e-002, 1.141962e-001, -8.867817e-002,


© ISO/IEC 2004 — All rights reserved

Copyright International Organization for Standardization
Provided by IHS under license with ISO
No reproduction or networking permitted without license from IHS
Not for Resale

1.037030e-002, -3.140113e-002, 8.081864e-002, -3.140113e-002, -5.709554e-003, 1.213068e-001, -2.943458e-001, 4.061563e-002, 2.826166e-002, -1.111757e-002, 1.902555e-002, -1.111757e-002, 1.387447e-003, -1.984829e-002, 3.124963e-002, -7.143995e-002}, {7.396659e-004, -1.369162e-004, 1.391751e-003, -2.608198e-003, -1.093562e-003, 2.320900e-003, 8.893338e-004, -9.636964e-003, -3.006470e-003, -9.636964e-003, 8.893338e-004, 2.320900e-003, -1.093562e-003, -2.608198e-003, 1.391751e-003, -1.369162e-004, 1.310324e-003, -1.580025e-003, -1.135814e-002, 1.560800e-003, 5.650387e-004, 2.935235e-004, -1.339447e-002, -9.177711e-003, 2.551871e-003, 1.150288e-003, -1.355215e-002, 3.073493e-002, 1.264820e-002, -7.655462e-003, -8.458699e-003, -1.381721e-002, -4.821704e-003, -2.893271e-002, -8.630720e-003, 1.664254e-002, -3.421843e-002, -1.405279e-002, 2.181907e-002, -1.650867e-002, -3.750855e-003, 7.276184e-003, 3.353111e-003, -2.393403e-002, 2.198931e-002, -4.085279e-003, -7.446381e-004, -9.770225e-003, -1.106898e-002, 8.200973e-003, 1.840973e-003, 9.715847e-003, -2.534854e-002, 1.281164e-002, 1.835396e-002, 2.973014e-002, -5.540532e-002, -9.028022e-003, -6.292394e-003, 8.653716e-003, -9.651852e-003, 4.021258e-004, -1.718832e-003, -4.535950e-004, -1.017689e-002, -2.000453e-003, 2.576019e-002, -2.336803e-002, -8.810358e-003, -1.053072e-002, -3.061427e-002, 1.495363e-002, -6.926512e-002, 2.630937e-002, -5.791501e-003, 1.410970e-002, -1.047529e-002, 1.738914e-003, -1.333424e-003, -3.372376e-002, -1.163341e-002, -1.108172e-002, -1.074507e-004, -7.130065e-003, -2.206791e-002, -6.327133e-003, -1.406747e-002, 5.995964e-002, -4.132826e-003, -2.089056e-003, -4.778993e-002, -4.125210e-003, 1.489926e-002, 3.266674e-002, 7.294908e-003, 2.530021e-002, -5.281757e-003, 3.382983e-002, -5.448354e-003, 1.263656e-002, 1.684153e-002, -1.987905e-002, 5.239729e-002, 3.803896e-002, 4.241328e-002, -5.767708e-003, -7.401642e-003, 7.026889e-003, -1.020150e-002, 1.049002e-002, -1.229622e-002, -9.871298e-003, -9.388789e-003, -6.517111e-003, -8.313027e-003, 1.686027e-002, 3.337268e-002, -2.565694e-002, 4.662770e-002, 1.856296e-002, 1.242536e-002, 3.876791e-003, 6.051529e-002, -2.357626e-002, 6.973768e-002, -2.720167e-003, -9.704969e-003, -6.905166e-003, 2.282890e-003, -1.039501e-003, -9.033588e-003, 2.302811e-002, -2.839082e-002, 2.302811e-002, -9.033588e-003, -1.039501e-003, 3.178790e-002, 9.046170e-002, 1.959269e-002, -5.005061e-002, 2.991841e-002, 6.203417e-002, -2.083824e-004, 2.422891e-002, 1.224172e-002, -6.037770e-002, 7.642096e-003, -4.376467e-002, 7.733799e-002, 2.763789e-003, 2.456815e-002, -1.504620e-002, 8.022586e-003, 4.960669e-002, 5.149200e-002, -1.269598e-001, 7.377675e-002, 2.489221e-002, -2.005085e-002, 5.169145e-002, -3.342972e-004, -5.459716e-003, -9.336830e-003, 3.479029e-003, -3.181200e-002, 3.479029e-003, -9.336830e-003, -5.459716e-003, -1.021773e-002, 3.925223e-002, 1.556016e-002, 4.776209e-002, 8.881249e-003, 3.087749e-002, 7.094176e-003, -1.299174e-002, -1.246347e-002, -2.157118e-002, 3.194761e-003, 4.390671e-002, -6.614214e-002, -9.445359e-003, -3.653965e-002, -3.511320e-002, 2.760124e-002, -5.858215e-002, -1.038413e-001, -1.387415e-002, 2.146141e-002, 2.365141e-002, -7.273033e-002, 5.940578e-003, 9.740386e-004, 7.085091e-003, -6.468053e-003, 1.572031e-002, -3.327068e-002, 1.572031e-002, -6.468053e-003, 7.085091e-003, -2.179518e-002, 2.296303e-002, -3.064052e-002, -7.728887e-002, 2.389736e-003, 4.185785e-003, -4.279769e-002, -7.712744e-003, -2.017280e-002, -4.585560e-002, -6.224923e-003, 4.603519e-002, 8.947675e-002, -7.962097e-002, -2.219384e-003, -2.333071e-002, 5.078914e-002, -1.245294e-002, -8.875050e-002, -7.587132e-002, -8.671156e-002, -9.005211e-002, 8.879214e-002, -4.030851e-003, -2.182965e-003, -6.622375e-003, 8.007848e-003, -2.443795e-002, 4.261477e-002, -2.443795e-002, 8.007848e-003, -6.622375e-003, 9.827929e-003, -2.055610e-002, -2.463922e-002, 6.328420e-002, -3.777716e-002, 4.729595e-002, -1.853639e-002, 7.270841e-003, -1.260185e-002, 2.124514e-002, 2.109458e-002, -2.552392e-002, 4.685004e-002, 7.012024e-002, 7.913757e-003, 4.861367e-002, -2.029203e-002, -4.929731e-002, 5.806531e-002, -7.224375e-002, -1.213771e-001, -9.121239e-003, -2.030472e-002, 3.629909e-002, 1.116849e-002, 8.556620e-003, -9.789413e-002, 8.556620e-003, 1.068477e-002, 3.160864e-002, 3.771094e-002, 7.136464e-002, -1.372039e-003, -3.510951e-002, 1.085823e-001, -3.510951e-002, -2.522980e-003, -3.058373e-002, 2.851387e-002, 6.264155e-003, 4.150808e-003, 1.061791e-001, -1.615807e-001, 1.061791e-001, 1.878874e-002, -5.177782e-002, -1.976061e-002, 2.762119e-002, -9.418679e-003, -1.109948e-002, -1.452073e-002, -1.109948e-002, 4.705904e-002, -6.180990e-002, -9.420886e-002, 8.331466e-002, -3.399635e-002, -4.525878e-002, 1.882742e-002, -4.525878e-002, -7.433314e-002, -5.523675e-002, -1.797119e-001, -4.636355e-002, 2.648280e-002, -3.168278e-002, 1.319517e-002, -3.168278e-002, -1.425728e-002, -2.518388e-002, 1.012019e-002, -5.359181e-002, 1.160688e-002, 3.789630e-002, -1.001762e-002, 3.789630e-002, 9.224074e-002, 4.249002e-002, -1.480006e-001, -2.089451e-002, -6.673311e-003, 9.463229e-004, 3.969101e-002, 9.463229e-004, -1.257478e-002, 7.446333e-002, 1.791001e-001, 6.097944e-002, -3.446791e-002, 1.252689e-002, -2.796488e-002, 1.252689e-002, 1.203145e-001, -1.153749e-001, -8.933239e-002, 1.669630e-001, -4.708139e-003, -4.003886e-003, -9.955143e-002, -4.003886e-003, 1.080021e-001, 9.764333e-002, 1.684387e-001, 1.298514e-001, 8.724919e-003, -4.692851e-002, 2.193852e-002, -4.692851e-002, -6.352331e-002, -2.131416e-001, 5.893079e-002, -6.503871e-002, 5.871346e-002, 7.867884e-003, 8.217796e-002, 7.867884e-003, -9.078781e-002, 2.769931e-001, 4.373516e-002, 5.482803e-002, 3.428840e-002, 1.788105e-002, 6.207113e-002, 1.788105e-002, 1.294749e-001, 1.881632e-001, -2.220356e-002, -4.780676e-002, 5.861687e-003, 6.310058e-002, -4.923838e-002, 6.310058e-002, 2.892501e-003, -2.044567e-002, 4.742471e-002, -6.280034e-002, -

© ISO/IEC 2004 — All rights reserved


Copyright International Organization for Standardization
Provided by IHS under license with ISO
No reproduction or networking permitted without license from IHS
Not for Resale

3.873695e-002, 4.316986e-002, -6.428923e-002, 4.316986e-002, -5.438211e-002, -1.580859e-001, 1.300926e-001, 1.512397e-001, -3.088439e-002, 2.125035e-002, 4.372014e-003, 2.125035e-002, -8.294568e-002, 6.770008e-002, -3.982878e-002, -7.604471e-002},
{-2.790265e-004, -7.303108e-004, -3.147082e-003, -7.834008e-005, -3.056342e-003, 8.003393e-003, -7.265002e-003, -6.579215e-003, 2.147495e-002, -6.579215e-003, -7.265002e-003, 8.003393e-003, -3.056342e-003, -7.834008e-005, -3.147082e-003, -7.303109e-004, 7.017813e-003, 5.037344e-003, 7.701897e-003, 7.015766e-003, -1.686549e-003, 1.366418e-002, -5.172932e-003, 2.280881e-003, 2.147371e-002, 1.577267e-003, 1.802063e-002, 8.844321e-003, 1.606042e-002, -4.061451e-004, -1.003696e-002, -1.322940e-002, 6.657706e-003, 2.316866e-002, 8.845146e-003, 1.230826e-002, -4.223155e-003, 2.834912e-002, 8.719341e-003, 9.585196e-003, 2.329824e-002, 1.241305e-002, -1.073245e-002, 4.756599e-003, 3.212985e-003, 6.593155e-003, 4.767926e-003, 5.105223e-004, -1.888643e-003, -2.851728e-003, 1.557210e-002, 1.443258e-002, -3.354083e-003, -2.835980e-002, -4.695749e-002, -3.798558e-002, -1.795492e-002, -2.860215e-002, 9.979820e-003, -1.204434e-003, 1.017919e-003, -4.564171e-003, -3.079228e-002, -2.412185e-003, -1.184714e-002, -2.413923e-002, -8.452134e-003, 1.689237e-002, -2.572091e-003, -1.045229e-002, -4.066543e-002, 3.442187e-003, -1.462839e-003, -1.485962e-003, 4.368823e-002, 1.873498e-002, -6.418486e-003, 1.737425e-002, -3.236041e-003, -6.403927e-003, 4.838421e-003, 1.374851e-002, -3.355549e-002, 4.068728e-003, 1.932161e-002, 1.237713e-002, -1.259413e-002, -1.907500e-002, -3.415532e-002, 8.255298e-003, 6.727685e-003, 1.242383e-002, -3.840036e-002, 1.148377e-003, 2.627540e-002, 6.328936e-003, 2.527367e-003, -6.907960e-003, 1.315422e-003, 8.755628e-003, 1.711759e-002, -1.541769e-002, -2.813798e-002, -1.188857e-002, 3.431054e-002, -3.750905e-002, 3.663800e-002, 5.862908e-002, -1.070398e-002, 6.592845e-004, -6.258566e-003, 4.077660e-003, 1.727585e-002, -3.758990e-002, -6.605328e-004, 2.918840e-003, 5.142715e-002, -6.391605e-003, 6.442585e-003, -1.993969e-002, -4.937222e-003, 2.629625e-002, -2.711449e-002, 2.358924e-002, 1.270199e-002, -3.441711e-002, 2.149287e-003, 5.617973e-003, 9.963131e-003, -9.482314e-003, 1.175728e-002, -1.596580e-004, -1.522885e-002, -1.596580e-004, 1.175728e-002, -9.482314e-003, -1.167805e-002, -3.685196e-002, 1.961005e-002, -3.672311e-003, 6.518427e-002, -2.821500e-002, -3.781283e-002, 2.695233e-002, -2.405131e-002, -5.167949e-004, 1.271746e-001, 2.627885e-002, -9.180940e-003, -7.446433e-002, -3.716417e-002, 1.944569e-002, 2.490388e-002, 3.114160e-002, -5.537611e-002, -8.022076e-002, 1.296174e-001, -1.299590e-002, -5.958676e-002, -7.813259e-003, -2.242719e-003, 7.050111e-004, 2.958560e-002, -8.058665e-003, -3.464389e-002, -8.058665e-003, 2.958560e-002, 7.050111e-004, -6.355755e-003, -2.064002e-002, -7.267278e-002, -9.013964e-002, -4.155875e-002, -1.210863e-002, 1.554392e-002, 3.513927e-002, 7.642716e-003, 3.813772e-002, 2.915722e-002, -1.109964e-001, 6.437682e-002, -4.013007e-002, 1.705991e-001, 1.221400e-002, -4.300772e-002, -2.728218e-002, -3.219968e-002, 8.615177e-002, 5.081038e-002, -6.140460e-002, -1.960384e-002, -3.176507e-003, -9.261329e-003, 1.005490e-002, 1.065973e-002, -2.895411e-003, 3.082609e-002, -2.895411e-003, 1.065973e-002, 1.005490e-002, 1.130692e-002, -4.745751e-003, 9.729308e-003, -5.334970e-003, 3.848771e-002, -2.034212e-003, -1.933796e-002, -2.041096e-002, -5.390009e-002, -2.552405e-002, -8.858668e-003, 1.113268e-001, 2.859161e-002, -5.280841e-002, 3.454202e-002, 2.613086e-002, -1.561817e-002, 1.337673e-002, 3.095406e-002, 4.790028e-002, -1.097085e-001, -2.086287e-002, 9.788007e-003, 6.948573e-002, 1.261890e-003, 7.006975e-003, 2.517785e-002, -8.544192e-003, -5.120748e-002, -8.544192e-003, 2.517785e-002, 7.006975e-003, -1.039888e-002, 2.804569e-002, -2.802506e-002, 8.148943e-003, 4.606779e-003, -6.240651e-002, 2.415639e-002, 1.883224e-003, 3.758435e-002, 4.977567e-002, -2.357117e-004, -2.411558e-002, 1.065452e-001, 1.082834e-001, -1.904306e-002, 1.972913e-002, -1.342578e-002, 4.781145e-002, -1.895319e-002, -5.519270e-002, 4.584582e-002, 3.101916e-002, 8.344057e-003, -2.859698e-002, -6.041583e-003, 1.408971e-003, -1.794948e-002, 1.408971e-003, 9.449598e-002, -1.365961e-001, 4.073683e-003, -1.150888e-001, 1.827878e-002, 7.231887e-003, 9.352152e-002, 7.231887e-003, -2.945136e-003, 1.028577e-002, 1.144053e-002, -2.546225e-002, -1.513670e-002, -4.763115e-002, 1.125045e-001, -4.763115e-002, 4.897879e-002, 2.487938e-001, 1.203826e-002, -9.789312e-003, 4.112062e-004, -7.392392e-003, 9.310532e-002, -7.392392e-003, 4.567763e-002, 2.231415e-002, -6.941217e-002, -1.293186e-001, 6.958909e-003, -1.955793e-002, 1.458922e-002, -1.955793e-002, 7.385198e-002, -2.620163e-002, 5.263693e-002, -6.283003e-002, -9.232972e-003, 3.252030e-002, 3.641418e-002, 3.252030e-002, 6.488388e-003, -6.714356e-002, 3.145020e-002, 1.321323e-001, 2.270843e-002, -1.958684e-002, -5.897944e-002, -1.958684e-002, 4.050249e-003, -5.654987e-002, 6.887555e-003, -2.308216e-001, -1.022566e-002, -2.708107e-002, -2.156668e-002, -2.708107e-002, -4.190793e-003, 2.990712e-002, -7.226857e-002, -6.940124e-002, -3.633501e-002, 6.205832e-003, -3.030622e-002, 6.205832e-003, 8.022883e-002, -1.142478e-001, -8.083265e-002, 7.211638e-002, -2.188480e-002, -2.351649e-002, -9.952339e-002, -2.351649e-002, -4.152312e-002, 2.036327e-002, 1.759732e-001, -3.801486e-002, -2.915884e-002, 2.734611e-002, -3.705766e-002, 2.734611e-002, -3.121253e-003, -2.200465e-001, 2.675885e-002, -1.344688e-002, 4.614729e-002, -3.421786e-003, 9.401147e-002, -3.421786e-003, -1.106775e-001, -1.994833e-001, 6.812687e-002, 1.043969e-001, 3.018255e-002, -2.388501e-002, -1.173819e-002, -2.388501e-002, 8.703156e-002, -1.472836e-001, -1.222600e-001, 1.506413e-001, 1.877593e-002, 2.525074e-002, -6.200701e-002, 2.525074e-002, 4.363138e-002, -8.344653e-002, -4.794537e-002, 1.899613e-002,


© ISO/IEC 2004 — All rights reserved

Copyright International Organization for Standardization
Provided by IHS under license with ISO
No reproduction or networking permitted without license from IHS
Not for Resale

8.077837e-003, -4.103274e-002, 1.294228e-002, -4.103274e-002, -4.728388e-002, -2.934669e-001, 3.379571e-002, 6.124861e-002, -2.380439e-002, -3.621483e-002, 9.626431e-002, -3.621483e-002, 2.598560e-002, -4.387641e-002, -8.841866e-002, -1.067686e-001}
};

mean vector $m_2^g$ [80]={
8.843593e+002, 2.403833e+003, 1.737765e+003, 1.526182e+002, -9.784034e+002, 4.191625e+001, 6.165575e+002, -3.469682e+001, -3.416187e+002, 9.492594e+001, 3.690677e+001, -2.099181e+002, -1.158035e+002, -1.320889e+002, -6.250609e+001, 1.180137e+002, -2.280708e+002, -4.026758e+001, -2.754209e+001, 2.992490e+000, 3.727073e+001, -9.282199e+001, 8.020906e+001, -3.957739e+001, 8.536662e+001, -1.329809e+002, -5.339486e+001, 2.743493e+001, -5.518627e+001, 2.904315e+001, -1.131941e+001, -1.711856e+001, 5.222944e+001, -1.502859e+000, -9.789720e+001, -5.445711e+001, -2.925400e+001, -5.679068e+001, -5.946718e+001, -2.986785e+001, -5.956113e+001, 5.490918e+000, -2.463138e+001, -4.458176e+001, 4.348638e+001, -2.456420e+001, 8.019093e+001, -1.466407e+001, 7.884968e+000, -1.394358e+001, -1.249457e+001, -2.611497e+001, -7.231194e+001, -5.492323e+001, 9.043944e+000, -3.591951e+001, 9.405164e-002, 3.533917e+001, -8.145889e+001, 1.088444e+002, 7.643657e+000, 8.383147e+001, 1.210902e+001, -5.559056e+001, -8.651181e+001, 8.619082e+001, 5.328631e+001, 4.058341e+001, 9.051705e+001, -2.180794e+001, 1.029833e+001, 4.316940e+001, -6.556708e+001, 1.135970e+001, -1.669699e-001, -5.727180e+001, -4.645445e+001, -9.694536e-001, -7.056385e-001, -1.485459e+001};

LDA basis matrix $\Psi_3^g$ [63][150]={
{-7.741634e+000, 1.829286e+000, -1.449109e-001, 1.437837e+000, 1.924119e+000, 9.495554e-001, 6.261485e-001, -3.162753e-001, -8.336103e-001, -7.072892e-001, -7.814442e-001, -1.506050e+000, -1.224375e+000, -3.597943e-001, -5.524351e-002, 8.891351e-001, 1.411753e+000, -8.640414e-002, 8.362954e-001, 1.050341e+000, -1.097926e+000, 2.222708e-001, 4.852009e-001, 1.168163e+000, 4.441253e-001, 8.292212e-001, 1.944823e-002, 1.139017e-001, -8.711448e-001, -6.732004e-001, -8.017534e-002, 5.058522e-001, 6.052199e-001, -8.264575e-001, -8.767277e-001, -8.685618e-001, 1.617345e-002, -4.563689e-001, -2.343690e-001, -1.940267e-001, -2.090382e-002, 2.325265e-001, -6.766809e-001, -7.784044e-001, 3.075471e-001, -6.685599e-001, -1.436418e-001, 1.879448e-001, 7.186920e-001, -7.539703e-001, 1.653869e-001, -6.270063e-001, -2.980772e-001, 9.278932e-001, -5.007295e-001, 1.269174e+000, -2.878946e-001, -7.137409e-001, -8.042572e-001, -1.378709e-001, 1.745699e-001, 8.780685e-001, -7.243145e-001, 1.702151e-001, 2.195698e-001, 3.967132e-001, 5.719280e-001, -3.477750e-001, 1.076949e-002, 3.710151e-001, -1.248878e+001, -9.401777e-001, 1.605977e+000, -7.936581e-002, -5.634763e-001, -6.994336e-001, -4.058656e-001, 8.226517e-002, 8.636450e-001, 6.200274e-001, -4.226763e-001, -1.445128e+000, -1.872996e-001, -4.008612e-001, 5.359427e-001, -3.835030e-001, 1.065853e+000, 5.412992e-004, -2.665428e-001, -1.384566e-001, 3.963586e-002, 1.221073e-001, -1.307660e-001, -1.057506e+000, -4.429103e-002, 1.663768e-001, 3.675245e-001, -1.847105e+000, -2.249997e-001, 4.495044e-001, -3.138408e-001, 8.792556e-002, 7.417430e-001, 6.089587e-001, 1.606046e+000, -3.667504e-002, 6.742095e-001, 3.247145e-001, 6.380926e-001, -4.056850e-001, 4.223484e-001, -4.501400e-001, 6.785250e-001, 7.382506e-002, -5.903650e-002, -1.049061e-001, -6.932738e-001, -5.082939e-001, -4.239806e-001, 7.719184e-001, 3.568571e-001, -4.637411e-001, 5.992950e-001, 2.633822e-001, -1.057119e+000, -4.383641e-002, -4.531908e-001, -2.251364e-002, -1.221914e-002, -4.510510e-001, 9.553680e-001, -1.037365e+000, 5.341814e-001, 9.795088e-001, -1.823859e-001, -5.279021e-001, -1.508281e-001, 2.353754e-001, -1.080096e+000, -6.659554e-002, 3.020593e-001, -1.851132e-001, 2.218192e-001, 1.710595e-001, -6.104378e-001, -1.647810e-001, -3.796428e-001, 1.008728e-001, -1.072778e-001, -5.628052e-001},
{1.729150e+000, 3.924374e+000, -1.437395e+000, -3.134269e-001, -8.521060e-001, -8.520324e-001, -2.974514e+000, 7.608442e-001, -1.244715e+000, -8.566283e-001, -9.211608e-001, -9.828125e-001, 1.540293e+000, -3.436027e-001, 1.022804e+000, 1.057710e-001, 1.060076e+000, 6.516145e-001, 3.277842e-001, -1.282309e+000, -2.516169e+000, 1.430233e-001, 3.337948e-002, 9.056040e-001, -2.323979e-001, -5.902102e-001, -5.907049e-001, -4.832744e-001, 1.387252e-001, -2.762052e-001, 2.593788e-001, -8.291878e-001, -1.432754e-001, 7.716857e-001, -3.539004e-001, 7.975887e-002, 9.650254e-001, -1.036244e+000, -5.979524e-001, 6.878940e-001, 1.303454e+000, -5.422733e-001, -2.478314e+000, 3.644187e-001, -3.910286e-001, 8.428416e-001, 1.043044e-001, -1.499068e+000, -6.812498e-001, -2.144769e+000, 1.168999e-001, -1.763217e+000, 5.957156e-001, -3.026297e-002, -5.606804e-001, -1.276582e+000, 9.897074e-001, 1.017664e-002, 1.512695e-001, -1.208763e+000, -5.033823e-001, 4.392274e-001, -5.332718e-002, -1.197327e+000, 1.354196e+000, -2.069511e+000, -1.245294e+000, 3.660610e-001, -2.450851e-001, -1.721399e+000, 5.059236e-001, -1.529314e+001, -9.133017e+000, -8.125012e-001, 1.886071e+000, -1.047086e+000, -1.152944e+000, -1.624854e+000, -7.767498e-

© ISO/IEC 2004 — All rights reserved


Copyright International Organization for Standardization
Provided by IHS under license with ISO
No reproduction or networking permitted without license from IHS
Not for Resale

001, -1.703635e+000, 7.476643e-002, 1.139416e+000, -1.134990e+000, 6.547001e-001, -1.905926e+000, -1.325566e+000, 4.852940e-002, 5.810808e-001, 8.884870e-002, 1.024926e+000, -8.004966e-001, 3.488830e-001, 1.171440e+000, 5.647122e-001, -6.125544e-001, 3.372217e-001, -1.822431e-001, 7.187340e-001, 1.750899e-001, -4.494638e-001, -1.439414e+000, -6.982049e-001, 2.174360e-001, -3.183173e-001, -9.605333e-001, -1.256267e+000, 4.113901e-001, -8.170588e-001, -2.379202e-001, -8.476289e-001, -9.686178e-001, 7.445143e-001, 1.020359e+000, -7.121705e-001, -4.553698e-002, -1.561992e+000, 3.964000e-001, 5.892782e-001, 1.056207e+000, -4.375160e-001, -5.415335e-001, -1.069670e+000, -6.089120e-001, 1.355099e+000, 2.589856e-001, 2.282674e-001, -4.163525e-001, -5.449322e-001, -9.661404e-002, -2.382451e-001, 3.076386e-001, 7.091694e-001, 4.060293e-001, -3.836130e-001, 5.739589e-001, -5.355175e-001, 6.279126e-001, -2.916057e-001, -6.806442e-002, 3.388978e-001, -5.035041e-001, 4.854345e-001, -8.055033e-001, 1.905339e-001, 1.154417e-001, 1.786531e-001, 6.814992e-001, -9.139195e-001, -2.694822e-001, -2.800833e-001},
{-3.537344e+000, -2.232783e+000, -8.956722e+000, -1.668778e-001, -7.079905e-001, 1.270692e+000, 1.201822e+000, 1.204429e-001, -4.320610e-001, 1.948170e-001, -1.544249e-001, -1.458240e+000, 8.450400e-001, -1.549975e-001, -2.810762e+000, 6.694061e-001, -1.337226e+000, 1.115207e-001, 1.521187e-001, -4.633756e-001, 1.445243e+000, 1.701484e-002, 1.308623e+000, 4.109421e-001, 1.038740e+000, 4.717348e-001, 3.468055e-002, -5.557456e-002, 2.592755e+000, 1.137070e+000, 7.217544e-001, 1.455280e+000, 1.172698e-001, 1.004134e+000, -1.537704e+000, -4.985985e-001, -2.864799e-001, -1.616459e-001, -8.744574e-001, -2.872375e-001, 3.428197e-001, 5.157989e-002, 1.203894e+000, 8.940843e-001, -3.106878e-001, 2.050694e-001, 2.553943e-001, 8.963426e-001, 8.621991e-001, 2.961471e-001, -3.978695e-001, -5.214798e-001, -5.143315e-001, -1.225619e-001, -1.223365e+000, 4.981912e-001, 3.010358e-001, -1.085485e+000, 3.665541e-001, 8.263060e-001, -1.377485e+000, -1.579644e+000, 1.589032e+000, 5.846126e-001, -2.272815e-002, 3.594322e-001, -8.060819e-001, -1.232648e+000, -1.363374e-001, 7.897789e-001, 1.415031e-001, 8.270487e+000, -1.652270e+001, 2.243707e+000, 1.122069e+000, -1.521723e+000, -6.477013e-001, 7.396857e-001, -6.489483e-001, -1.179252e+000, 8.675111e-001, 7.853097e-001, -4.261360e-001, 8.027063e-001, -2.400150e-002, 1.269175e+000, -8.780381e-001, 1.804856e+000, 2.894367e-001, -1.358417e+000, -9.131902e-001, -1.419427e+000, -1.234326e+000, -3.270870e-001, -1.179107e+000, 6.575889e-001, 1.057282e+000, -1.524223e+000, -1.191945e+000, 8.896610e-001, -9.562094e-001, -7.136262e-001, -4.124450e-002, -7.731634e-001, -9.495224e-002, -7.845059e-001, 8.277430e-001, 1.238308e+000, -1.216813e+000, 1.293723e+000, 1.008403e+000, 1.624586e-001, 5.682081e-001, -5.790884e-001, -2.342637e-002, -4.553808e-001, 2.469983e-001, 2.030764e-001, -3.165205e-001, -2.327536e-001, 1.610813e-001, -9.066858e-001, 1.116932e+000, 5.401078e-002, 6.453106e-001, -9.624362e-002, 7.676637e-001, 6.775770e-001, 3.601937e-001, 9.676693e-001, -7.436998e-001, 1.367869e-001, 7.487952e-001, 1.231654e+000, 5.397050e-001, -2.431576e-001, 7.855294e-002, -5.989438e-001, 3.334584e-001, 5.450058e-001, -7.049628e-002, 1.283869e+000, -1.174298e+000, 4.960372e-001, 5.568721e-003, -1.288278e-001, 8.730035e-001, -1.213253e-001, 1.091038e+000, 1.261510e+000},
{1.481592e+000, 2.317285e+000, -5.037004e+000, 7.471765e+000, 1.185164e+001, 1.221489e+000, -1.143364e+000, -2.663417e+000, 2.733525e+000, 1.638218e+000, 3.394222e+000, 2.486600e-001, -6.528024e-001, 1.814727e+000, -4.460465e-001, 1.957428e-002, -1.287108e+000, 3.096420e+000, -2.147018e+000, -1.572498e+000, 2.653404e+000, -3.335583e-002, -3.009925e-001, 1.590831e+000, 9.800604e-001, 9.160387e-001, 3.451114e-002, -1.264839e+000, -1.556595e-001, -8.734898e-003, 1.196837e-001, 1.367901e+000, -1.667811e+000, 2.332213e+000, -1.604685e+000, -8.387943e-001, 5.856509e-001, 1.829533e+000, 3.231105e+000, 6.537441e-002, -3.455906e+000, 4.428071e-001, -9.004886e-001, 4.546445e-001, -1.410771e-001, -9.193203e-001, 8.825182e-001, 1.159048e+000, -1.578209e+000, -8.600307e-001, -1.330143e+000, -6.856795e-001, -7.535737e-001, 6.517844e-001, -9.866330e-001, -5.991690e-001, 2.242187e-001, 3.365208e-001, 1.561646e-001, 5.907457e-001, 1.605609e+000, -9.300750e-001, 1.623134e+000, 2.977221e+000, 8.739555e-001, -2.475503e+000, 1.182270e+000, 3.764537e-001, 9.298576e-001, 1.171396e+000, 4.605977e+000, -3.519334e+000, 5.252871e+000, 2.453597e+001, -1.930724e+000, -5.729170e+000, 1.075325e+000, -6.781901e-001, -9.052652e-001, 3.122070e+000, -3.739898e+000, 1.672296e+000, -7.108125e-001, 3.500231e+000, 1.032145e+000, 1.638783e+000, 7.026298e-001, 1.661169e+000, -2.162236e+000, 2.099663e+000, 1.616635e+000, -1.542735e+000, 8.043968e-001, -1.627921e-001, 2.085568e+000, -8.960785e-001, 3.822023e-001, -1.990659e+000, -6.097535e-001, -9.277710e-001, 1.420197e+000, 1.520630e+000, -2.712181e-001, 1.999183e+000, 1.243438e+000, 7.637016e-001, 1.457978e+000, 1.374579e+000, 2.809159e+000, 6.736943e-001, 6.250178e-001, -8.769217e-001, -8.032265e-001, -1.673169e-001, -1.276175e-001, 1.662386e+000, 2.644823e-001, -1.714119e+000, -2.343476e+000, 3.651583e-001, 3.196215e-001, 1.554957e+000, 7.591748e-001, -6.372765e-002, -1.733081e+000, 9.320127e-002, -2.336616e+000, -1.549660e+000, 1.389254e+000, -1.719921e-001, 1.453609e+000, -2.469030e+000, -8.321620e-001, 6.365604e-001, -1.065663e+000, -7.767400e-001, 1.328598e+000, 1.995703e-002, 4.294639e-002, -7.174753e-003, 1.605474e-001, -1.717576e-001, -1.144132e+000, 2.951369e-001, -8.728009e-003, 1.967550e-001, -3.605493e-001, -2.995063e+000, -2.215777e-001, -3.835332e-001},


© ISO/IEC 2004 — All rights reserved

Copyright International Organization for Standardization
Provided by IHS under license with ISO
No reproduction or networking permitted without license from IHS
Not for Resale

{-2.432893e+000, -2.684301e+000, 2.744592e-001, -1.281707e+001, 4.956313e+000, 6.906176e+000, 4.640342e+000, 9.163692e-001, 5.223585e-001, -2.070196e+000, -5.492105e+000, -2.675586e+000, -8.783710e-001, -1.168397e+000, 1.018942e-001, -8.010393e-001, -7.343511e-002, 2.900552e-001, 5.741268e-001, -1.573426e+000, 5.420888e-001, 2.748491e+000, 1.345461e+000, 2.176022e-001, -3.765913e-002, 1.994222e+000, 3.298631e+000, 7.742160e-001, -7.654972e-001, 1.693197e+000, 1.601154e+000, -1.222590e+000, 2.102953e+000, 1.349023e+000, 1.577792e-001, -3.059012e-001, -1.738554e+000, 7.256006e-001, -5.108916e-002, 6.436821e-001, 5.873794e-001, 2.893434e-001, 7.128715e-001, 3.133968e+000, -2.273470e+000, 1.556561e+000, -1.217901e-001, -5.488071e-001, -2.028316e+000, 3.005207e-001, -5.565687e-001, -1.199367e+000, 3.247223e-001, -9.857653e-001, 1.190365e+000, -1.643157e+000, 8.124763e-001, -2.064339e-001, -3.465747e-001, 2.196688e-001, -6.663389e-001, -1.577254e-001, -1.447863e+000, -1.170584e+000, -7.615180e-001, -1.537459e+000, -3.331660e-002, -1.672252e+000, 2.695760e-001, -1.203884e-001, 1.035782e+000, -8.405931e-001, 2.135897e+000, 8.826116e+000, 1.841320e+001, 1.065113e+001, -6.128389e-001, 1.464155e+000, 3.158290e+000, -2.657524e+000, -3.263111e-001, -3.827050e+000, -1.375309e+000, -1.245490e+000, 2.327508e+000, -2.179332e+000, 6.719292e-001, 1.983271e+000, -1.115888e+000, -2.545311e+000, 5.930028e-001, 1.771352e-001, -2.279207e+000, 1.471020e+000, 1.240821e+000, 1.314154e+000, -5.663112e-001, 1.073237e+000, 5.999720e-001, -1.297472e+000, 4.023615e-002, -5.311539e-001, 1.422714e+000, -2.016163e+000, 1.138989e+000, -6.599228e-001, 2.975352e-001, -8.229598e-001, 1.125596e+000, -3.134207e-001, 1.267369e+000, -1.441248e+000, -3.037706e+000, 2.171269e+000, 3.137517e+000, -1.247510e+000, 1.923966e-001, -8.554137e-001, -1.371113e-001, 7.475680e-001, 9.227788e-001, 3.092694e-001, 3.566354e-001, 1.863942e+000, -4.367242e-002, -1.109193e+000, -7.779809e-002, -1.383902e+000, -9.888859e-001, 1.931176e+000, -9.753272e-001, 1.183056e+000, 4.861684e-001, 5.049533e-001, -2.921826e-001, 9.541570e-001, -8.723860e-002, 4.303858e-001, 1.300788e+000, -2.649224e-001, -9.156574e-001, -3.712732e-001, 9.409659e-001, -1.956686e+000, -1.439656e+000, -2.713674e-001, 1.080597e-001, 1.169165e+000, 1.526769e+000, 1.216295e+000},
{1.844764e+000, 2.349859e+000, 1.029145e+000, -3.483028e+000, 5.090701e+000, -9.099794e+000, -3.470400e+000, -1.274740e+000, -8.374367e+000, 2.655155e+000, 4.360554e+000, 3.404940e-002, -1.343256e+000, 3.465277e+000, 1.695425e+000, 1.314405e+000, 1.113879e+000, -9.463288e-001, -1.426045e+000, -1.724477e+000, -5.942147e-001, -2.016531e-001, -1.263055e+000, -3.981682e-001, 1.238646e+000, 1.674424e-001, -7.603797e-001, 5.212382e-001, -2.182966e+000, -4.323835e-001, 2.939691e-001, -6.194293e-001, -1.793515e+000, -1.655728e+000, -1.451263e+000, 2.649746e-001, 1.354316e+000, -8.712862e-001, 9.939472e-001, -8.604078e-001, 5.079959e-001, -1.734702e+000, 3.901465e+000, -1.522382e+000, 7.148075e-003, 2.234246e+000, -7.329115e-001, 2.161526e+000, -3.075268e+000, -1.702188e+000, -7.756702e-001, 2.540907e+000, -4.133843e+000, 6.741509e-001, -1.587888e+000, 9.518060e-001, 1.666656e+000, -1.837023e+000, -4.149987e-001, -3.062436e+000, -5.356118e-001, 2.220736e-001, -2.944566e-002, -3.253559e+000, -1.530994e-001, 7.355397e-001, 6.291060e-002, -3.425923e+000, 1.627269e+000, -2.789383e+000, -2.339980e+000, 6.466607e+000, 5.611242e-001, -7.359434e+000, 1.599892e+001, -2.681913e+001, 1.133633e+000, -1.060986e+000, -3.315662e-001, 1.576051e+000, 6.060312e+000, 4.283749e+000, 1.463381e+000, -2.198889e+000, -5.168229e-001, 5.934486e-001, -3.920838e+000, -1.945991e+000, -2.468117e+000, 3.285528e-001, 4.852424e-001, -2.025381e+000, 3.469069e-001, 2.003662e+000, 4.424062e-001, -9.555448e-001, 6.599155e-001, 3.605757e-001, 7.363084e-001, 8.998276e-001, 8.299045e-001, 7.611377e-001, -1.154417e+000, -4.182314e-002, -2.002745e+000, -7.017677e-001, 9.211975e-002, -6.693105e-002, -2.295902e+000, 1.239644e+000, -1.618789e+000, 1.328098e-001, 4.113173e-001, -2.661303e-001, -7.503348e-001, -1.340631e+000, 5.015596e-001, -8.977775e-001, 1.225461e+000, 1.351782e+000, 1.934922e-001, 8.197683e-001, 1.067442e+000, 8.589936e-001, 3.234866e-001, -1.283225e-001, -9.888390e-001, -1.066015e+000, -1.342912e+000, -1.211952e+000, -9.139721e-001, -2.147679e-001, -3.837339e-002, -1.463391e+000, 2.063820e+000, -2.725394e-001, 6.176610e-001, 2.308604e-001, -1.590359e+000, -1.070262e+000, -1.129517e+000, -5.695806e-001, -4.547864e-001, -7.636887e-001, 4.927667e-001, -9.248623e-001, -4.089786e-001, -7.914946e-001, 8.107375e-001, -9.454767e-002},
{4.821414e-002, 1.896860e-001, -1.225871e+000, -2.522030e+000, 1.091087e+000, 6.474048e+000, -9.596611e+000, -1.281370e+001, -7.719692e+000, 3.140171e+000, 8.481031e-001, -6.261991e-001, -6.610850e+000, 6.685045e-001, -3.365820e+000, 7.816858e-001, -8.687828e-001, 4.541444e-001, -8.749752e-001, 5.967154e-002, 4.713677e+000, -2.025651e+000, 4.026198e-001, -1.105753e+000, -2.291487e-001, -1.012716e-001, 1.776993e+000, 2.165548e+000, -1.387321e-002, -1.304949e+000, 7.907651e-001, -2.321920e+000, 1.855033e+000, -4.575317e-001, -3.610175e-001, 2.807803e-001, -1.730970e-001, -9.221589e-001, 1.704058e+000, -3.268171e+000, -2.808801e-001, 7.653403e-002, 2.959761e-001, -1.435750e+000, 1.101737e+000, 1.548448e+000, -1.384394e-001, 4.310817e-001, 1.269512e+000, -7.709778e-001, 3.501834e-001, 2.776298e+000, -9.931567e-001, -9.045803e-001, -1.056847e+000, 8.140444e-001, 3.504917e-001, 2.016366e+000, 2.158621e+000, 1.221004e+000, 1.955495e+000, -1.098802e+000, 1.943085e+000, -6.358539e-001, -7.825898e-001, -4.992950e-001, 7.563523e-001, -1.543453e+000, -1.133837e+000, -5.276116e-002, -2.542197e-001,

© ISO/IEC 2004 — All rights reserved


Copyright International Organization for Standardization
Provided by IHS under license with ISO
No reproduction or networking permitted without license from IHS
Not for Resale

2.006431e+000, -2.126590e+000, -4.274174e+000, -6.653829e-001, 2.927575e+000, 1.984702e+001, -6.775374e+000, -1.887294e+001, 8.565758e+000, 7.787639e+000, -2.236692e+000, 7.756705e-001, -2.758764e+000, -2.182408e+000, 2.245054e+000, 9.700628e-001, 3.434370e+000, 4.279285e+000, 3.963833e+000, -5.476583e-001, 5.486510e-001, -7.057762e-001, 1.076470e+000, -1.815904e+000, -9.210337e-001, 1.755885e+000, -2.439617e+000, 3.430456e-001, 2.596324e+000, 4.049197e-001, 2.633213e+000, 1.385099e+000, 2.654611e+000, 1.245002e+000, -9.739643e-002, -1.635877e+000, 3.493794e+000, 1.285475e+000, 2.118647e+000, 9.129196e-001, -4.703823e+000, -1.400802e+000, 9.905656e-002, -2.621406e+000, 1.002612e+000, 1.202106e+000, 1.487083e+000, -5.051467e-001, -2.201997e-001, 1.281566e+000, 2.247513e-001, -6.379707e-001, 3.212757e+000, 1.823458e-001, 9.893096e-001, -2.477543e-001, -2.667849e+000, 6.942874e-001, 1.634568e+000, 2.925392e-001, -1.693881e+000, 8.152602e-001, -1.466328e+000, -1.641545e+000, 3.634606e-001, 1.152315e+000, 2.974985e-001, -9.774233e-001, -4.896325e-001, 3.728372e-001, -3.140414e+000, -8.693568e-002, -1.430184e+000, -2.339119e-001, -1.659930e+000, 1.183439e+000, -1.298408e+000, -7.105880e-001, -7.670305e-001},

{-3.686032e+000, 4.110516e+000, 8.944638e+000, 7.633089e+000, 4.850807e+000, 1.162146e+000, 1.483031e+001, -1.531132e+000, -9.830190e+000, 2.748667e+000, 1.170427e+000, -2.035326e-001, 1.020690e+001, -4.407823e+000, 4.536560e+000, -2.962846e+000, 2.214553e+000, -3.982797e+000, 1.838901e+000, -3.922835e+000, -4.163236e-001, -1.474687e+000, -4.292475e+000, -1.292653e+000, 7.977925e-001, -8.341051e-001, -3.398251e+000, 1.462869e+000, -6.831513e-002, 1.495845e+000, -3.021081e+000, 1.020716e+000, 1.707891e+000, 4.868406e-001, -1.581234e+000, -2.076091e+000, -1.529061e+000, 2.573487e+000, 3.561863e-001, -2.870136e-002, 1.857385e+000, 4.961057e-001, 4.114363e+000, 6.257099e-001, -3.757227e-001, 2.315962e+000, 8.767778e-001, 1.654887e+000, -7.009564e-001, 1.898385e-001, 1.683405e+000, 1.806553e+000, 1.578356e-001, -1.776750e+000, -5.875955e-001, -5.187626e-001, -6.455231e-001, -5.248544e-001, 2.564388e+000, 3.049151e-001, -6.647699e-001, 1.116698e+000, 5.567062e-001, -1.342543e+000, 5.844831e-003, 7.168923e-002, -1.443473e+000, -3.704322e-001, -3.958529e-001, -1.879343e+000, 6.686535e+000, 9.597940e-001, -6.276686e+000, -9.598893e-001, 2.203235e+000, 7.798113e-001, 1.478094e+001, 9.397561e-001, -4.377032e-001, -1.909977e+001, 5.671358e+000, -4.578196e-002, 4.800373e-001, 3.918133e-001, -7.804401e-001, 5.718290e+000, -1.357251e+000, -4.026487e+000, 1.551983e+000, -2.277453e+000, 1.020028e+000, 5.874021e-001, -9.593392e-001, 4.396853e-001, 7.699760e-001, -3.190904e+000, 2.657752e-001, -2.031518e+000, -2.676809e+000, -7.642522e-001, 2.463669e+000, -2.600206e+000, -1.354736e+000, -1.619950e+000, 4.972147e+000, 3.846887e+000, 3.071837e+000, -2.189737e+000, 8.806307e-001, 2.261153e-001, 6.204580e-001, -1.820720e-001, 2.951774e+000, -2.024430e+000, 4.493533e-001, -2.723354e+000, -2.430009e+000, -1.700180e+000, -8.525618e-002, -3.228451e+000, -1.275415e+000, 9.564479e-001, -1.501701e+000, -3.023535e+000, -9.995945e-001, 2.767225e+000, -1.577210e+000, 1.759832e+000, 2.097802e+000, 6.209149e-001, 1.036556e+000, -6.304951e-001, 1.601170e+000, -8.036669e-001, 8.046494e-002, 6.173596e-001, -1.772623e-001, 1.405946e+000, -1.254348e+000, 2.133965e+000, -1.878587e-001, -6.671179e-001, 1.201359e+000, 1.651747e+000, 2.374812e-001, -3.904567e+000, -9.329689e-001, -2.522403e+000, 1.063173e+000, -2.296000e-001},

{-3.192544e+000, 4.363869e+000, -1.712002e+000, 1.799647e+000, -4.372985e+000, -1.381503e+001, 9.778051e-001, -2.640528e+000, 2.349078e+000, 4.938886e+000, -1.121815e+001, -4.999444e+000, -5.259258e+000, -6.775197e+000, 9.740466e-001, 2.904994e+000, -4.475738e+000, -6.213360e+000, 1.589109e+000, -5.659465e+000, 1.312212e-001, -5.199866e-001, -6.745003e-001, -2.419981e+000, 1.727915e+000, -3.652558e+000, 2.208734e-001, 4.400013e+000, 2.380565e+000, 2.459290e+000, 2.088920e+000, 6.001165e+000, -2.104680e+000, 3.446176e+000, 3.698476e-001, -5.787214e-001, -1.403966e+000, 1.341986e+000, -1.965022e+000, -2.213589e+000, -4.867881e-001, -3.768197e-001, -7.558863e-001, 4.530643e-001, -2.235903e+000, -1.234921e+000, 3.701599e+000, 2.357697e+000, 8.793317e-001, -3.763587e-001, 2.330536e+000, 5.974876e-001, 1.163221e+000, 2.349806e+000, 3.449745e+000, 8.371385e-001, -4.218388e-002, 1.871622e+000, 2.045193e+000, -1.718454e-001, 5.035713e-001, -4.108562e-001, 1.070625e+000, 1.715425e+000, 8.610657e-001, -2.671510e-001, 1.631396e+000, 1.216811e+000, -2.230507e+000, 2.400969e+000, 3.227132e+000, 2.915397e+000, 5.625590e-002, 4.838737e+000, 3.036647e+000, 4.390575e+000, 1.783570e+001, 2.121760e+001, 1.458288e+001, 6.680412e+000, 1.644422e+001, 4.950683e+000, 5.406813e-001, 3.303470e+000, -4.302863e+000, 1.901703e+000, 4.398901e+000, 6.476761e+000, 5.150227e+000, -2.247205e+000, -2.991908e-001, 1.108002e+000, 1.165149e+000, 4.523951e+000, 6.249561e-001, -1.216338e+000, 1.379198e+000, -1.713749e+000, 4.869077e+000, 1.727028e+000, 6.993861e-001, -3.139974e+000, 2.460469e-001, 1.538963e+000, 4.492452e+000, 4.328355e+000, -9.991066e-001, 5.931896e-001, 2.801614e+000, -1.379815e+000, 1.568863e+000, 2.861574e+000, 1.330950e+000, 2.935112e+000, -3.857718e+000, -1.130666e+000, -1.383124e+000, 1.636442e+000, 8.334472e-001, 2.818542e+000, 6.178300e-001, 7.576917e-001, -4.890596e-001, 3.742926e+000, 1.843416e+000, 1.495764e+000, -2.389404e-001, 2.566550e+000, -2.668168e-001, 2.085798e-001, -3.967957e-002, -3.780620e-001, -


© ISO/IEC 2004 — All rights reserved

Copyright International Organization for Standardization
Provided by IHS under license with ISO
No reproduction or networking permitted without license from IHS
Not for Resale

8.541973e-002, -1.353172e+000, -2.923234e-001, -1.250169e+000, 1.107668e+000, 1.219552e+000, 3.557661e-001, 2.665867e+000, -4.774947e-002, 1.921336e+000, -2.767680e+000, 7.686721e-001, 1.208006e+000, 1.551271e-001, 2.096127e+000, 2.532569e-001, -1.072813e+000, -3.177544e+000},
{3.033574e+000, 1.266759e+000, -2.168702e+000, -1.832202e+000, 5.256037e+000, -8.734629e+000, 1.001096e+001, -1.944790e+001, 1.095362e+001, 3.202899e-001, 9.969073e+000, 9.106180e+000, -4.233505e+000, -9.841946e-001, 2.926716e+000, -1.221883e+000, 1.139961e+000, -3.395462e+000, -6.983609e-001, 1.406658e+000, 2.666825e-001, -2.846134e+000, 1.108538e+000, 2.274637e+000, -3.689628e-001, -1.830037e-001, 1.159996e+000, -6.167976e-001, 1.235211e+000, -9.875627e-001, 6.094807e-001, 8.411687e-001, 5.816676e-001, 2.297614e+000, 8.615336e-002, 2.565890e+000, 1.139200e+000, 4.450789e-001, 6.876024e-001, -2.506037e+000, -3.072368e+000, -2.099002e+000, 9.430818e-001, -3.193688e-001, -1.287705e+000, -2.664589e+000, -9.979176e-001, 6.602904e-001, 1.585402e+000, -1.125833e+000, -7.895237e-001, -1.883908e+000, -3.031527e+000, -8.890380e-001, -7.704972e-001, -2.570270e+000, -2.008971e+000, -1.746908e+000, -5.946294e-001, -7.950286e-001, 1.132211e+000, -1.771398e+000, 6.609940e-001, 2.716100e-001, 1.024203e+000, 3.081103e+000, -1.899760e+000, -1.417187e+000, -2.507171e+000, -1.301095e+000, -3.863809e+000, -9.633134e-003, -1.082659e-001, -3.811001e+000, -1.110371e+000, 1.891181e+000, -9.946771e+000, 1.776987e+001, -1.589663e+001, -2.883090e+000, -7.883791e+000, -9.318406e-001, 1.430098e+001, -3.727713e+000, -1.128164e+000, 1.063431e+000, 5.851168e+000, 1.276144e-001, -8.335408e-001, 5.120473e-001, 4.659557e-001, -3.598048e+000, 3.947298e-001, 1.536082e+000, 4.099432e+000, 2.758964e+000, 3.117902e+000, 1.476018e+000, 9.645540e-001, 5.896127e+000, 3.825087e+000, 1.721922e+000, -2.129827e-001, -1.303703e+000, -2.977450e+000, 1.914156e+000, 1.059777e+000, 3.024846e+000, -2.917457e+000, 3.283318e+000, 1.577842e-001, 2.622079e+000, -4.662248e-001, -2.406910e+000, 9.461085e-001, 1.043660e+000, 1.196545e+000, 3.431284e+000, -2.060119e+000, 2.056678e+000, -2.437879e+000, 4.871110e+000, 3.851698e+000, 1.509458e+000, -2.273293e+000, 1.484974e-001, -1.879344e+000, -6.288572e-001, 8.089894e-001, -1.953773e+000, 2.247948e+000, 1.190060e-001, -2.647568e-001, 3.281817e-001, -1.792628e+000, -5.291343e-001, 1.955908e+000, 6.986640e-002, 9.870453e-001, 1.574370e+000, -3.749126e-001, 7.549900e-001, 1.125155e+000, -4.028472e-001, 1.490990e+000, -1.240172e-001, -1.364318e+000, -9.521151e-001, 1.294935e+000, 1.735945e+000},
{4.014191e-001, -1.337723e+000, -3.324201e+000, 9.100545e+000, 2.395215e-001, 6.949189e+000, -1.181634e+001, -3.053248e+000, 9.835204e+000, 4.070455e+000, 1.202304e+001, 2.291931e+000, 6.040152e+000, -7.483087e+000, 2.889705e+000, -4.362675e-001, 2.302764e-001, -3.995487e+000, 3.601398e-001, 1.023666e+000, -3.093891e+000, 1.164064e+000, 2.705917e+000, 2.785666e+000, 1.425597e+000, -1.501728e+000, -4.618321e-001, 4.899873e-001, -2.809795e+000, 2.870093e+000, -2.541963e+000, -8.886688e-001, 4.662027e+000, -9.462191e-001, 2.177131e+000, -1.558083e+000, 2.393405e+000, -1.383658e+000, -9.589966e-002, -1.358495e+000, 7.381388e-001, 7.528221e-001, 6.239830e-001, 2.463968e+000, -1.127155e+000, 1.584090e+000, 2.646709e+000, 1.510446e+000, 1.059185e+000, 1.807112e+000, 2.350467e+000, 4.750558e-001, 3.498304e+000, 1.702179e+000, -1.635613e+000, 3.461682e-001, 7.307997e-002, -9.549430e-001, 6.677287e-001, -1.085888e+000, 3.564363e-001, -9.332521e-001, -2.128012e+000, -1.122442e+000, -2.643262e+000, 1.655481e+000, -1.982699e+000, -5.724387e-001, 5.542870e-001, 6.528329e-001, -2.461969e+000, 1.845512e+000, -5.629509e-003, -1.117186e+001, 1.391476e+001, 6.883329e+000, 1.552917e+001, 2.285773e+000, 1.736690e+001, -4.863632e+000, -2.693212e+001, 1.415671e+001, 7.892085e+000, -3.876623e+000, 2.568005e+000, -2.035865e+000, 9.565959e+000, -2.050028e+000, 1.464102e+000, -3.834162e+000, -2.150313e+000, 6.707677e+000, -2.259883e+000, 1.855616e-001, -1.765752e-001, 1.643707e+000, 1.562505e+000, 2.644516e+000, -3.045904e+000, 6.823853e+000, 2.618173e+000, 2.831992e+000, 3.071043e+000, 2.776180e+000, 8.730931e-002, -2.622525e+000, 6.531536e-001, 2.951184e+000, 1.113278e-001, 1.250251e+000, 2.158110e-001, -1.229446e+000, 1.377920e+000, -2.465224e-002, -2.200442e-002, 7.730138e-001, 3.225021e+000, 1.183804e-001, 2.095085e+000, 8.861651e-001, 2.348315e+000, 1.655303e+000, 1.096337e+000, -1.477547e+000, -5.158865e+000, -3.175549e-001, 1.206901e+000, 5.715359e-001, -1.776882e+000, -1.723062e+000, 1.576238e+000, -1.092614e+000, -1.111689e+000, 1.767769e+000, 1.970170e-001, -1.492854e+000, -1.415637e+000, 3.187784e+000, 1.668465e+000, 2.252015e+000, -3.628016e-001, 1.317883e+000, -6.762586e-001, -2.309094e+000, -1.262015e+000, 1.570825e+000, 6.016079e-001, 3.270827e-001, -2.777304e-001, 1.472569e+000},
{-8.817467e-001, -2.459291e+000, 1.162602e+000, 2.300766e+000, 2.914181e+000, 5.488808e-001, -6.906418e-001, -2.274573e+000, 9.415310e+000, -8.154220e+000, -7.913696e+000, -1.481451e+001, 8.597087e+000, 5.583969e+000, -1.086660e+000, -5.058855e+000, -1.774481e+000, 1.040712e+001, 2.934735e-001, -7.027928e+000, -1.089959e+000, 1.426695e+000, -8.205368e+000, -6.140843e-001, -3.571226e-002, 2.961804e+000, 1.592395e+000, -3.705737e+000, 1.652787e+000, -2.112829e+000, 4.588805e-001, -2.979942e+000, 2.072906e+000, -2.006218e+000, 4.500249e-001, 5.083113e+000, -1.267103e+000, -2.359152e+000,

© ISO/IEC 2004 — All rights reserved


Copyright International Organization for Standardization
Provided by IHS under license with ISO
No reproduction or networking permitted without license from IHS
Not for Resale

-2.074371e+000, 6.032373e-001, -1.091468e-002, -1.626958e+000, 2.670543e+000, -8.179164e-001, 5.609857e+000, 2.549391e+000, -1.934015e+000, -2.551864e-001, 6.117739e-001, -1.796452e+000, -7.598037e-001, 1.195134e+000, -2.844580e+000, 7.100189e-001, -6.687435e-001, 7.604419e-001, 7.932624e-001, 4.221939e+000, -1.491227e-001, 6.990267e-001, -1.460417e+000, 2.172407e-001, 9.617862e-001, -4.028187e+000, 3.752899e+000, -2.024226e+000, -1.643116e+000, -3.373408e+000, -2.045587e+000, -5.798442e-001, 1.659730e-001, -1.842828e+000, 5.268189e-001, -1.021603e+001, 5.378972e+000, -3.898719e+000, 6.783482e+000, 1.625862e+001, -4.059939e+000, 1.416624e+000, -2.143748e+001, -1.650897e+001, -2.191696e+001, -3.243338e+000, -8.816308e-002, 6.955072e+000, -1.139386e+001, 3.980502e+000, -4.111312e+000, 5.235252e+000, 8.275338e-002, -3.796761e+000, 3.870835e+000, -1.798689e+000, -1.147583e+000, -3.459160e+000, -4.152420e+000, -2.434877e+000, -4.184484e+000, -1.166175e+000, 3.629183e+000, -2.278145e+000, -2.228114e+000, -3.463345e-001, 5.263793e-001, 3.626492e+000, 1.544624e+000, -1.203264e+000, -6.302449e+000, -5.869217e-001, -1.186724e+000, 2.290696e+000, 1.971469e+000, 3.130176e+000, 5.300397e-001, 1.451404e+000, 2.663303e-001, 4.176809e-001, 1.599800e+000, -1.744946e+000, 1.081234e-001, -1.013318e+000, -4.439796e+000, -3.046203e+000, 1.123704e+000, 1.345660e+000, -1.477095e+000, -4.360797e+000, -3.067093e+000, 2.064594e+000, -3.031492e+000, -7.848501e-001, 1.228227e+000, 5.000704e-001, -9.320481e-001, 1.730873e-001, -2.007419e+000, -3.560370e-001, -2.728458e+000, -1.090705e-002, 2.447250e+000, -1.785471e-001, 1.010432e+000, -9.070964e-001, 4.986254e-001, 3.370864e-001, 3.104194e+000, 1.004022e+000, -8.947952e-001, -6.254108e-001},

{-1.223920e-002, -1.455109e+000, -3.573267e+000, -3.634203e+000, -1.934115e+000, 1.676659e+000, 6.134627e+000, -3.386222e+000, -1.711183e+000, -1.645046e+000, 1.738098e+001, -1.731646e+001, -1.117112e+001, -5.298690e+000, -9.483240e-001, 8.839387e+000, -6.181669e+000, -1.191073e+000, 7.056126e-001, -3.615936e+000, -7.431904e-001, 2.654967e+000, 1.159100e+000, -9.443484e-001, 1.491730e-001, 3.255166e+000, -7.220679e+000, 1.890953e+000, 1.949204e+000, 3.119529e+000, -4.414531e+000, -3.291311e-001, 4.289684e+000, 7.096374e-001, 1.580936e+000, -4.109211e+000, 2.699713e+000, -1.088761e+000, -2.193661e+000, -4.597496e+000, -1.712729e-001, 1.005389e-001, 2.753689e+000, 7.872078e-001, 4.855686e-001, 1.154304e+000, 3.487619e+000, 8.955255e-001, 1.694785e+000, 4.714233e-001, 1.709071e+000, -1.045319e+000, 4.844691e+000, -1.285058e+000, -1.617444e+000, -4.615985e-001, -4.058317e+000, -2.591331e+000, 1.771145e+000, -5.106566e-002, 8.117938e-001, -2.055450e-001, -1.400645e+000, -4.979707e-001, -2.774273e-001, -7.803320e-001, 9.174402e-001, 1.916660e+000, 7.555386e-001, -2.196933e+000, 1.752276e+000, -1.696151e+000, 4.925201e+000, 3.102755e+000, -3.503542e+000, -4.057249e+000, -6.111381e+000, -3.232357e+000, -1.214879e+000, -6.742833e+000, 3.259072e+000, 2.510299e+001, -1.989961e+001, -5.135964e+000, 2.353089e+000, 3.629711e+000, 1.690275e+001, 1.075350e+001, 6.878244e+000, 4.124468e+000, 3.712626e+000, -3.422296e+000, 5.556464e+000, 1.005471e+001, 5.662732e-001, -2.144402e+000, 1.132392e+000, -3.329312e+000, 1.162796e+000, 7.770613e+000, 3.090593e+000, -2.501362e+000, -1.929260e+000, -6.522508e-001, 3.641026e+000, 2.686774e+000, -1.592553e+000, 1.218351e+000, -1.154677e+000, 7.458729e-001, -1.542590e+000, 2.791419e+000, 4.377576e+000, -9.458816e-001, -3.239098e+000, 1.569020e+000, 2.749430e+000, 3.778603e+000, -1.466092e+000, 9.070036e-001, -5.176147e-001, -1.659343e+000, -1.283879e+000, -2.563313e+000, 1.958483e+000, 3.762101e+000, -2.132188e+000, -3.395724e+000, 2.500068e+000, 1.740323e+000, -1.333806e+000, 2.080561e+000, 1.298197e+000, -8.398820e-001, -1.814348e-001, 9.233003e-001, -5.908052e-001, -2.816213e-001, 1.938143e-001, -8.988317e-001, 5.159245e-001, 4.193861e-001, 8.751593e-001, 2.748247e+000, 1.560488e+000, -1.280757e-001, 9.980676e-001, -2.739849e+000, 2.864973e+000, -2.188330e-001},

{-4.260445e-001, -7.440773e+000, 3.296858e+000, -6.622113e+000, -3.555006e+000, 7.751239e+000, 8.734438e+000, 1.053123e+001, 9.187264e+000, 9.336326e+000, -1.623954e+000, -6.115030e+000, -1.346492e+001, -1.180789e+000, -2.989680e+000, -1.048860e+001, -7.646913e+000, -2.944242e+000, 6.301021e-001, -2.764664e+000, 3.362106e-001, -1.268258e+000, 3.238612e+000, 3.755684e+000, 3.954645e-001, -3.120935e+000, 1.572004e+000, 3.355912e+000, -3.671503e+000, -6.445040e-002, 1.851255e+000, -3.354676e+000, -2.566677e+000, 3.672899e+000, -1.516941e+000, 2.838081e+000, 7.833743e-001, -1.676801e-001, 9.476413e-001, -2.751601e-001, 8.442524e-001, 1.953470e+000, -5.481210e+000, 1.072971e+000, -2.061759e+000, 1.399105e+000, -2.187701e+000, -1.610041e-001, 2.708107e+000, -2.358959e+000, -2.189299e+000, 1.823073e+000, 3.106931e+000, 1.249665e+000, 3.053776e+000, -1.942776e+000, 1.241829e+000, 1.623314e-001, -9.373965e-001, -4.050400e+000, 9.192377e-001, -2.331130e-001, -1.772130e+000, -5.637499e-002, 1.968734e+000, -1.170308e+000, 1.851805e+000, 3.056597e+000, -2.270060e+000, 1.237828e+000, -1.240402e+000, -8.499629e+000, -1.476159e+000, 1.650634e+000, -2.949365e+000, -1.584687e+001, 6.892802e+000, -1.159671e+000, 8.079841e-002, -3.798714e+000, -6.951941e+000, -2.051495e+001, 9.531559e+000, -1.454699e+001, -1.615220e+001, -1.060061e+001, 1.112428e+001, 1.477638e+001, 7.514496e+000, -2.291245e+000, 1.655501e+000, -3.612376e+000, 7.341061e+000, -3.029951e+000, -2.506764e-001, 4.511588e+000, -


© ISO/IEC 2004 — All rights reserved

Copyright International Organization for Standardization
Provided by IHS under license with ISO
No reproduction or networking permitted without license from IHS
Not for Resale

2.680589e+000, -6.894192e+000, 4.153346e+000, 1.409517e+000, 8.042524e-001, 2.730714e+000, -2.982575e+000, 9.742683e-001, 7.140063e-001, 2.580298e+000, -5.160426e+000, -2.095927e+000, 8.508920e-001, -7.614543e-001, -2.561745e-001, -1.135126e+000, 3.011325e-001, 3.684979e+000, 1.636024e+000, -4.795262e+000, 1.495589e+000, 2.515167e+000, 2.352736e+000, 3.349168e+000, -1.385377e+000, 1.062963e+000, -3.550282e+000, -7.917541e-001, 1.258306e+000, 2.407018e+000, 3.863478e-001, -1.644357e-001, -4.346421e-002, 6.805712e-001, -1.536994e+000, 1.471783e-001, -7.331172e-001, 7.492054e-001, -1.654282e+000, 6.255737e-001, -2.894303e-001, 2.980607e-001, -2.328596e+000, 1.600550e+000, 2.878735e-001, 1.790252e+000, 1.608248e+000, -9.267876e-002, -3.136515e+000, 3.722071e+000, -8.933604e-001, 2.631875e+000, -1.835178e+000, -1.898138e+000},
{-2.441382e+000, 6.611700e-001, 5.842548e+000, -5.221087e+000, 7.076735e-001, -6.504422e-001, -9.315923e+000, -3.219849e-001, 7.347923e-001, -1.333568e+001, -9.182782e+000, -8.465186e+000, 1.129744e+000, 6.155490e+000, 6.376772e+000, -4.653002e-001, -1.030977e+001, -9.213804e+000, 5.734818e+000, 4.541276e+000, 4.845631e+000, -2.142322e+000, 3.451297e+000, -5.834923e-001, 2.784029e+000, -3.269479e+000, -1.861720e+000, 5.103572e+000, -2.594712e+000, 7.477387e-002, -8.681145e+000, 4.775475e-001, -3.468125e+000, -7.087623e-001, -2.179976e+000, -2.648959e+000, 2.557374e+000, -1.930142e+000, 5.612490e-001, 5.008230e-001, 1.827747e+000, 4.132933e+000, -4.814331e+000, -7.216717e-001, -2.571277e+000, -2.260235e+000, 1.263671e+000, 4.303325e-001, 1.371438e+000, -1.611721e+000, 2.148552e+000, -2.887236e+000, -8.929041e-001, -1.128367e+000, 4.858901e+000, -1.554583e+000, -1.042224e+000, -2.558322e+000, -2.491085e+000, -8.952019e-001, 1.037008e+000, 2.239946e-001, 1.052686e+000, 2.416631e-001, -1.022578e-001, 2.585813e+000, -2.176990e+000, -2.410440e+000, -3.912215e+000, -1.193871e+000, 2.856124e+000, 1.985399e+000, -2.628619e+000, 2.505310e-001, -4.668632e+000, -4.672199e+000, -2.285892e+000, -1.809799e+000, -4.692840e+000, -7.060655e+000, -1.106791e+001, 1.387315e+001, 1.196663e+001, 3.221113e+001, -2.447695e+001, 8.936696e+000, 1.318156e-002, 1.008692e+001, 6.519745e+000, -1.027343e+000, 1.940025e+000, -1.285918e+001, 3.313568e+000, 4.855744e+000, -2.571315e+000, 1.345548e+000, -2.154592e+000, 1.120777e+000, 3.105146e+000, -4.608561e+000, -5.069981e+000, -6.548412e-002, 3.327172e+000, 2.472023e+000, 2.870751e+000, -5.763335e-001, 5.633324e-003, -2.367896e+000, 6.413452e+000, 4.859878e-001, 3.323077e-001, -8.415304e+000, -6.362742e-002, 3.857006e-001, 1.031539e+000, -2.940019e+000, 3.502123e-001, 1.496180e+000, 5.614591e-001, -8.499753e-001, 9.928780e-001, -3.339447e+000, -6.547932e+000, 1.811059e+000, 1.911709e+000, 2.911842e+000, -8.833556e-001, 1.086784e+000, -2.078739e+000, -6.300184e-001, 2.886541e+000, -1.150279e+000, 2.975430e-001, 3.101821e+000, 1.694201e-001, 4.191108e-001, 3.390895e-002, 2.605136e+000, -1.782458e+000, -1.969906e+000, 2.463839e+000, -5.499826e-001, -8.269466e-001, -1.237433e+000, -1.252406e+000, 7.733148e-001, -6.877340e-001, 4.205881e+000, 2.174159e+000, -2.187614e+000},
{2.497517e+000, -6.015501e-001, 6.380054e+000, -2.093534e+000, 5.843355e+000, 2.093258e+000, 2.895003e+000, 1.090114e+001, 1.227052e+000, 1.718151e+000, -2.736484e+000, -1.176692e+001, -7.742493e+000, 7.780749e+000, -4.135491e+000, -5.255011e+000, 1.007300e+001, -1.507969e+001, 7.707795e+000, 3.062841e+000, -3.413961e+000, -2.869642e+000, -6.124669e+000, 1.220778e+001, 2.432756e+000, -4.986737e+000, 1.919485e+000, -3.570529e+000, 2.493052e+000, 1.129497e+000, 6.541812e+000, 4.353876e+000, -2.526359e+000, 7.598816e-001, -8.138618e-001, -2.493703e+000, -8.480144e-001, 2.716023e+000, 5.668563e+000, -7.271592e-001, -5.612485e-001, -3.389150e+000, 8.648366e-001, -4.882551e+000, 1.108002e-001, 3.598602e+000, -4.673675e+000, 8.988740e+000, 3.002843e+000, 2.626881e+000, -7.426280e-002, -2.443449e+000, 5.822565e-001, 5.239240e-001, 2.043955e+000, -2.051172e+000, -1.323625e+000, -9.010511e-001, 3.476863e+000, -1.692966e+000, 1.471985e+000, -1.709542e+000, -6.014843e-001, -8.556247e-001, -1.866650e+000, 1.932191e-001, 1.214741e+000, 3.212030e+000, -6.110732e-001, 3.026250e+000, -2.549225e+000, -1.800880e+000, -6.934114e+000, -1.606686e+000, -5.345887e+000, 7.500114e+000, 1.204054e+000, 8.404031e+000, -1.167323e+000, 8.462592e+000, -5.318615e+000, 2.630763e+001, 1.084820e+001, -1.840217e+001, -1.164086e+000, 4.419310e-001, -1.828326e+001, -2.031600e+001, 9.442373e-001, -3.025682e+000, 1.075553e+001, -1.616175e+001, -1.274143e+000, -2.800756e+000, -4.077372e-001, -7.749264e+000, -8.502223e+000, 1.850852e+000, 2.796905e-001, 5.411722e-001, 1.972832e-001, -3.929743e+000, -2.051659e+000, 7.004898e+000, -2.094201e-001, 3.651363e+000, -1.729065e+001, 2.113687e+000, -7.401777e+000, -6.527748e+000, 2.487193e-001, 3.313582e+000, 4.390069e+000, 1.650750e+000, -2.283321e+000, -8.439021e+000, 1.853808e-001, 2.132200e-002, -5.936427e+000, 4.737653e+000, 3.359421e+000, -2.158760e+000, 1.591957e+000, -1.896904e+000, 1.218195e+000, 1.610030e+000, 1.310282e+000, -1.894754e-001, -9.460917e-001, -1.688636e+000, -3.123927e+000, 6.209238e-002, 4.109880e+000, -3.591581e+000, -2.575590e+000, 2.410692e+000, 5.287094e-001, -1.100880e+000, -3.835198e-001, 2.050283e+000, 2.868321e-001, 9.275537e-001, -1.744303e+000, 2.448604e-001, 3.006793e-001, 9.403355e-001, -2.655781e-001, 3.799616e-001, 2.763442e+000, 9.470661e-002},

© ISO/IEC 2004 — All rights reserved


Copyright International Organization for Standardization
Provided by IHS under license with ISO
No reproduction or networking permitted without license from IHS
Not for Resale

{-3.168230e+000, -2.205885e+000, -4.802354e+000, 4.069248e+000, -6.525506e-001, -5.311114e-001, -7.747490e-001, -6.128355e-001, 3.807301e+000, 2.157139e+001, -7.934330e+000, 3.905475e+000, 8.965324e+000, 4.756881e+000, -9.238353e+000, 1.059210e+001, -1.658796e+000, 1.037533e+001, 4.211390e+000, 4.058765e+000, -1.398755e+000, -9.476375e-001, 1.950643e+000, -3.174675e-001, 1.377229e+000, 2.887351e+000, -1.632762e+000, -1.629959e+000, -3.301822e+000, 3.267439e+000, 1.914536e+000, 2.673051e+000, -2.198857e+000, 8.158938e-001, -5.065417e+000, -4.721054e-001, 2.016074e+000, -6.444251e+000, 2.775962e+000, -5.008234e-001, 6.101782e-001, 2.850238e+000, 2.696344e+000, 3.980454e+000, -2.504603e-001, -5.391846e+000, -4.262909e-001, 4.351123e+000, 5.617093e+000, 1.476265e-001, 6.873520e-001, -1.914490e+000, 3.925254e+000, -1.596643e+000, -1.493283e+000, -2.410674e+000, -7.907342e-001, -3.453058e+000, -4.152530e+000, -9.882009e-001, -1.139716e+000, -1.540730e+000, -2.315940e+000, -7.915827e-001, -6.461699e-001, 1.908847e+000, 3.256774e+000, 1.843551e+000, -2.624184e+000, 2.294012e-001, 2.799134e+000, -1.796212e+000, 7.778050e+000, 1.065798e+000, 3.034023e+000, 5.066492e+000, -7.511939e+000, 4.603047e+000, -8.214218e+000, -3.814715e+000, 1.996864e+000, 1.237917e+001, -1.112315e+001, -6.444120e+000, -3.129141e+001, -2.608745e+000, 1.008488e+001, -1.680722e+001, 7.597457e+000, -1.222666e+001, -9.399872e+000, 8.215871e+000, -7.534323e+000, -9.623647e+000, 2.237169e+000, -1.744667e+000, -3.644442e-001, 2.123197e+000, 6.954408e+000, 7.330108e-002, 2.218016e+000, 2.178746e+000, -3.149173e+000, 3.078068e+000, -1.342580e+000, -7.401091e+000, 2.738152e+000, 1.050219e+001, -1.660431e+000, -1.503751e+000, 3.799939e+000, 8.423869e+000, -7.052367e-002, 5.351606e+000, -4.703371e-001, 5.806397e+000, -2.364924e+000, -1.068721e+000, -4.258680e-001, -1.918727e+000, 3.635857e+000, -4.179807e-001, 4.470749e+000, 1.729410e+000, 9.362079e-001, -6.358613e-001, -1.076676e+000, -3.288309e-001, -1.400395e+000, -3.753303e-001, 3.798784e-001, -4.841134e-001, 1.390432e+000, 1.711093e+000, -2.287105e+000, 4.554054e-001, -4.425887e+000, -2.913803e+000, 5.750057e+000, -7.629962e-001, 7.138073e-002, -1.673187e-001, -1.934753e+000, 2.253686e+000, 2.755400e+000, -9.540884e-001, 1.698842e+000, -1.923675e-001, 6.541065e-001, -2.299385e+000},
{5.829018e+000, -2.226295e+000, 7.710302e+000, -3.446397e+000, 4.972117e+000, 1.334242e+000, -2.714316e+000, -1.348518e+001, 9.290562e+000, 2.777375e+000, 8.831741e+000, -9.302574e+000, 6.703115e+000, 9.471883e+000, -1.715846e+000, -6.402238e+000, 5.109828e+000, -2.378746e+001, -1.546329e+000, 3.683271e+000, 4.084249e+000, 7.425812e-003, -4.191437e-001, -6.171427e+000, -1.355868e+001, 5.136557e+000, 5.612294e-001, 3.407601e+000, 5.067975e+000, 1.818725e+000, -2.770489e+000, 3.251158e+000, -6.084177e+000, -2.117580e-001, 2.374430e+000, -1.900875e+000, 4.533429e+000, -2.586318e-001, -3.826451e+000, 2.657840e-001, 5.649183e+000, 1.538690e-001, -5.401382e+000, -1.843464e+000, -1.260545e+000, 9.419119e-001, 1.037601e-001, 2.383967e+000, -1.883863e+000, 1.386129e+000, -7.639903e-001, -8.011959e-001, 2.731449e+000, -2.491120e-001, -7.703015e-001, -1.686568e+000, 9.640807e-001, -1.804737e-001, 3.157669e+000, -9.935251e-001, 1.910167e+000, 3.948438e+000, 4.853662e+000, -1.026046e+000, -8.739223e-002, 9.540252e-001, 1.044968e+000, 5.382935e+000, 8.964389e-001, 5.651489e-001, -6.429837e+000, 1.813675e-001, -7.509300e+000, 1.139529e+000, -6.479992e+000, -1.431090e+000, -1.773123e+000, -4.588615e+000, 1.072985e+001, 5.419449e+000, 1.418556e+001, -1.395871e+001, -8.821385e+000, 5.610949e+000, -2.541714e+000, -2.416337e+001, 9.357309e+000, -1.927739e+001, 3.772606e+000, -5.130054e-002, -1.902484e-001, -1.444223e+001, -6.953177e+000, 2.370652e+001, -3.507183e+000, 1.065664e+001, -1.292596e+000, 6.316744e+000, -8.161075e-001, 1.086838e+001, 1.270848e+000, -9.403340e-002, 5.816104e+000, -5.772101e+000, 4.463443e+000, -1.916290e+000, -1.153582e+000, 2.165574e+000, 2.684770e+000, -1.546733e+000, -3.421094e+000, 1.517180e+000, -2.221897e+000, -1.579932e-001, -5.879236e+000, -5.894635e+000, 2.037026e+000, 3.927080e+000, -2.806543e+000, -2.629123e-001, -2.490428e+000, 4.920249e+000, 1.778580e+000, -1.074950e+000, -1.998120e+000, 2.892191e+000, 2.726546e+000, -5.373276e+000, 3.200990e+000, -1.020955e-001, -1.041730e+000, -3.934445e-001, 4.732859e-001, 3.208127e+000, -1.591995e+000, 4.295794e-001, 2.334473e+000, 4.219265e+000, -1.289136e+000, 4.937828e+000, -2.320795e+000, 3.916156e+000, 6.713829e+000, -4.657995e+000, 2.238343e+000, -1.749285e+000, 2.297471e+000, -7.469205e-001, 2.472756e+000, -4.750394e+000},
{-2.929378e+000, 2.597159e+000, -1.696513e-001, 2.404408e+000, 3.896216e+000, -2.046192e+000, -4.170426e+000, 8.897676e+000, 1.324938e+001, 1.843583e+001, -9.884955e+000, -4.403504e+000, -4.270114e+000, 3.724306e+000, 3.598356e+000, 1.489578e+001, 1.534107e+001, -1.043520e+001, 5.928595e+000, -1.143349e+000, 4.068944e+000, -3.159744e+000, -1.077423e+001, 3.973937e+000, -6.373395e-002, 3.588318e+000, 1.292404e+000, 3.533624e+000, 2.838069e+000, -4.854850e+000, -5.616519e+000, -3.404324e+000, 6.162615e+000, -1.147254e+000, -3.433864e+000, -2.584652e+000, -4.286515e+000, 1.382409e+000, 1.391401e+000, 2.980633e+000, -6.630750e+000, 2.250760e+000, 3.252317e+000, -6.541369e+000, 4.310641e-001, -9.566180e-001, -7.728239e-001, -3.508243e+000, -9.451782e-001, -2.624913e+000, 2.705080e+000, 1.382093e-001, 2.922037e+000, -1.014287e+000, 4.319372e+000, -3.050363e+000, -4.488271e+000, 2.623575e+000, 1.804157e+000,


© ISO/IEC 2004 — All rights reserved

Copyright International Organization for Standardization
Provided by IHS under license with ISO
No reproduction or networking permitted without license from IHS
Not for Resale

1.147530e+000, 2.911788e-001, -3.125738e+000, 4.835286e+000, 1.580952e+000, -6.855124e-001, 1.540679e+000, 6.737590e-001, -1.565295e+000, 8.226688e-001, -3.346194e+000, 2.573367e+000, 2.421160e+000, -1.114282e+000, -5.785167e+000, 2.001366e+000, 7.629431e-001, -3.620143e+000, -7.304634e+000, -6.690365e+000, -4.775550e+000, -8.321709e+000, -1.773620e+001, 8.291497e+000, 9.153351e+000, 1.830552e+001, 2.213654e+001, 1.043179e+001, -4.422134e+000, 7.084153e+000, 6.860709e+000, 4.603159e+000, 5.562094e+000, 9.877062e-001, 1.846594e+001, 7.967349e+000, -1.698300e+001, -1.584707e+001, -5.095123e+000, 7.906852e+000, -5.506103e-002, -4.987471e+000, -2.722333e+000, -4.325660e+000, 2.075259e+000, 6.431856e-004, 2.918830e-001, -1.190808e+001, 8.844107e-001, -4.281908e+000, -3.624741e+000, 2.193662e+000, 8.739086e+000, -5.347031e+000, 2.795599e+000, -6.159290e+000, 2.138394e+000, 1.553173e+000, -3.573141e+000, -3.406675e+000, 3.811568e+000, 9.405443e-002, 1.347653e-001, 3.822703e+000, -6.006571e+000, 1.326492e+000, 3.616893e+000, 1.149132e+000, 4.279713e+000, -1.755609e+000, 3.186377e+000, 1.733029e-001, 3.092043e+000, 3.344266e+000, -3.263894e+000, -7.642629e-001, 1.839573e+000, 2.859823e-001, 2.089727e-001, 3.168869e+000, -3.279393e+000, -4.973869e+000, -2.493350e+000, 6.060610e-001, -2.205416e+000, 2.789657e+000, -1.420012e+000, 7.519694e-001, 5.978601e-004, -2.410286e+000, 2.755262e+000},
{2.259709e+000, 3.390603e+000, -2.927556e+000, 1.339537e+000, 2.174391e+000, 3.623141e+000, 7.455838e+000, -6.603217e+000, -6.855096e-001, 2.532111e+000, 5.430261e+000, -5.840366e+000, -2.453412e+000, 9.512400e+000, 2.869984e+001, 2.006680e+000, 4.735678e+000, 1.343125e+000, -1.062537e+001, 5.869720e+000, 9.793756e+000, -6.250905e+000, 3.567096e+000, -6.419844e+000, 1.118924e+000, -5.078481e+000, -2.295863e+000, -3.076665e+000, 3.404569e+000, -3.058212e+000, 1.197589e+000, -8.780772e-001, -3.298445e+000, 2.491344e+000, -5.254859e+000, 2.335380e+000, -4.358851e+000, -1.186872e+000, 8.194534e+000, -5.200639e-001, 2.173900e+000, -2.466381e+000, -3.123474e+000, 6.907554e-002, 3.274157e+000, -5.313282e+000, -2.395069e+000, 2.186961e+000, 2.659075e+000, 1.101695e+000, -1.701784e+000, -3.078885e+000, -2.356318e+000, 7.424489e-002, -3.149494e+000, 4.578417e+000, 2.725175e+000, -2.208197e+000, -2.690996e+000, 5.675745e+000, 1.368436e+000, -5.644948e+000, 1.088334e+000, -6.133883e-002, -1.301699e+000, 3.478338e+000, 2.817635e+000, -4.140992e+000, 4.379151e-001, -8.311101e-001, -2.475864e+000, 2.956661e+000, 3.360116e+000, -1.463396e+000, 1.509094e+000, 2.647565e+000, -6.410900e+000, -2.697681e+000, 1.137507e+001, 9.235348e+000, 8.300394e-001, -2.271427e+000, 5.826086e+000, -1.822263e+001, -2.074511e+001, 2.962654e+001, -6.090119e+000, 1.087306e+001, -1.708323e+001, -2.978570e+000, -4.022631e+000, -7.473733e+000, -1.297736e+001, 2.541618e+001, 3.987219e+000, -5.349260e+000, -4.943118e+000, 2.881057e+000, 3.965001e+000, -3.913596e+000, 7.950005e+000, -3.255318e+000, 9.646799e-001, 2.848328e+000, -1.624673e+000, -7.102679e+000, 6.764129e+000, -5.801703e-001, -5.410784e+000, 5.693414e+000, -4.794398e-001, -1.193497e+001, -5.364186e+000, -6.790279e+000, 1.365766e+000, 1.405062e+000, -1.010812e+000, -2.012488e+000, -2.325588e+000, 2.568655e+000, -1.201070e+000, 1.843677e+000, -4.993546e+000, -1.470635e+000, -6.118698e-001, 4.977580e-001, 6.762559e-001, -2.106692e+000, 1.486168e+000, -3.588915e-001, 1.252984e+000, -4.674985e+000, -5.498073e+000, -2.674825e+000, -3.196643e+000, 3.925372e+000, -4.662798e-002, 1.921683e+000, 2.987473e+000, -3.167186e+000, 2.335509e-001, 4.096124e+000, -4.394358e+000, 2.603671e+000, 3.629034e+000, 1.431012e-001, -2.803053e-001, -6.304729e+000, 1.052653e+000, 3.460647e+000},
{-6.162055e-001, -1.267445e+000, 1.285693e+000, 2.401877e+000, 5.582766e-001, -4.421250e+000, 7.067238e+000, -2.852116e+000, 1.714088e+000, -1.714901e+001, -2.864186e+000, 3.155919e+000, -4.561614e+000, -9.120210e-001, -1.390451e+001, 5.845091e+000, 1.264602e+001, -4.967813e+000, -1.401869e+001, 1.426934e+001, 8.648796e+000, -2.400344e+000, 2.362414e+000, -7.175378e+000, 4.981649e+000, -2.045562e+000, 5.839865e-001, 1.026407e+000, -1.508544e+000, 3.604485e+000, -6.027035e+000, 2.271927e+000, 3.198181e+000, 2.171698e+000, -1.073730e+000, 3.289926e+000, -1.856225e+000, -1.032717e+001, -4.412200e+000, 2.018436e+000, 3.186728e+000, 1.262162e+001, -2.136919e+000, -4.481849e-002, -1.463562e+000, 4.068708e+000, 1.796720e+000, 3.313300e+000, 3.715309e+000, -2.321455e+000, -2.577344e+000, 3.087015e+000, -1.534032e+000, 1.417544e+000, 2.293160e+000, -1.268275e+000, -4.341303e-001, 1.983246e+000, -2.905912e+000, 4.302547e+000, -2.450890e+000, -2.501933e+000, 2.479440e+000, 2.508332e+000, -9.487457e-001, 1.454764e+000, -6.533921e-001, -5.074536e+000, -2.050741e-001, -4.788027e-001, -6.088940e-001, -1.901212e+000, -1.901042e+000, -9.806294e-001, 3.487514e+000, -3.684632e+000, 3.595759e+000, -5.774847e+000, 7.087828e+000, -1.601169e+000, -3.947828e+000, -3.274561e+000, 3.472582e+000, -6.706383e+000, 9.864889e-001, 1.358133e+001, -1.355453e+001, -4.791234e+000, 3.683331e+001, 1.541685e+000, -1.102080e+001, 9.632518e+000, -1.484472e+001, -3.446119e+000, -9.908956e+000, 1.695833e+001, 5.478638e+000, -7.700100e+000, 1.581318e+001, 2.310418e+000, 4.927220e+000, 5.560559e+000, 6.032004e+000, -4.610241e+000, 5.207759e+000, 5.986913e+000, -1.212897e+001, 1.377977e+000, 2.550966e+000, 3.045485e+000, 4.175633e+000, -2.430398e+000, -3.971555e+000, -2.780334e+000, 1.321975e+000, -2.610711e+000, -1.428265e-001, 6.034499e+000, 4.748932e+000, -

© ISO/IEC 2004 — All rights reserved


Copyright International Organization for Standardization
Provided by IHS under license with ISO
No reproduction or networking permitted without license from IHS
Not for Resale

3.384246e+000, 5.477318e+000, 9.189949e-002, -3.078342e+000, 1.658701e+000, 1.499320e+000, -4.132885e+000, -1.327023e+000, 4.855706e+000, -1.122684e+000, 2.429994e-001, 5.877729e-001, -6.187376e-001, -2.821978e+000, 4.438974e+000, -6.383547e+000, -3.338060e+000, 3.867450e+000, -2.142932e+000, 1.825504e+000, -2.394548e+000, 1.074996e+000, 3.586979e+000, 3.723197e+000, -1.423766e+000, -2.163697e+000, -3.057722e+000, 3.165266e+000, 1.362023e+000, 3.705513e-001, 1.530092e+000},
{7.315170e-002, -8.647883e-001, -8.883444e+000, 2.842470e+000, 1.156659e+000, -9.067277e+000, 5.555971e+000, 8.793855e-001, -8.952045e+000, 1.471887e+001, 3.507116e+000, -1.752819e+001, 9.509794e-001, -5.939863e+000, -7.125179e+000, -9.926912e+000, 8.368818e+000, -2.892911e+000, -1.563599e+001, 6.541239e+000, -4.604180e+000, -3.278966e+000, -1.615487e-001, -1.468172e+000, 1.307469e-001, 1.188808e+001, 2.892274e+000, -5.022511e+000, 2.884204e+000, -9.044152e+000, -6.767584e+000, 1.013748e+000, -4.735618e+000, -7.631497e+000, 3.533293e+000, 2.836921e+000, 3.555733e+000, -5.314253e+000, -3.086445e+000, -4.880620e+000, 3.560287e-001, 1.655286e+000, -4.294725e+000, 3.544193e+000, -1.213766e+000, -3.856614e+000, -2.199361e+000, 2.057793e+000, 6.771420e-001, -2.022652e+000, 8.064277e-001, -5.483603e+000, -6.106016e-001, 7.924809e-001, 7.043430e+000, 2.930736e+000, 1.185747e+000, -1.978146e+000, -5.646025e+000, 3.429141e+000, 2.180208e-001, 1.136102e+000, -4.769458e+000, 4.164080e+000, 3.436595e+000, -1.212679e+000, -3.134247e+000, -2.373817e+000, -1.746344e+000, 3.816526e+000, 5.585581e-002, 1.588433e+000, 7.127559e+000, 4.760658e-001, -1.136724e+000, 1.155644e+001, -4.159038e-001, -1.695142e+000, -3.682414e+000, -5.528829e+000, -7.230704e+000, 4.315634e+000, 3.343029e+000, 1.374744e+001, -7.378431e+000, -1.277021e+001, -1.795726e+001, 1.312132e+001, -1.204688e+001, 3.405214e+001, -5.654767e+000, 1.555058e+001, -1.083035e+001, 1.407990e+001, -6.734464e+000, -7.847641e+000, 1.691859e+001, -2.311219e+000, 7.218512e+000, -4.786357e+000, -9.415263e+000, -8.256050e+000, 5.572924e+000, -2.431400e+000, -7.336116e+000, -5.190938e+000, -9.791169e+000, -1.721307e+000, -6.093943e+000, 6.477137e-001, -1.094597e-002, -2.377452e+000, -1.538579e+000, -1.038689e+000, -3.724078e+000, 2.117723e+000, 2.045152e+000, -4.264757e+000, -4.923107e-001, 2.838504e-001, -9.454454e-001, 4.118326e-001, 1.686812e+000, 1.832768e+000, -2.294357e+000, 2.927939e+000, 1.204568e-001, 2.689783e-001, -3.243813e+000, -1.775205e+000, -1.679314e+000, -1.024838e+000, 1.192174e+000, 6.965243e+000, 6.071844e-001, -4.546744e+000, -3.345660e+000, 5.506317e+000, -6.285654e+000, 6.266158e+000, 3.674213e+000, 1.059960e+000, 4.989886e+000, -4.002769e+000, -2.246384e-001, 1.821096e-001, 2.529420e+000, 3.223795e+000, 1.231985e+000, -4.636329e-001},
{-1.805019e+000, -5.913589e+000, -7.072869e-001, 4.426712e+000, -1.374541e+000, 1.686841e+000, 2.139372e+000, 8.309281e+000, -6.979176e+000, -5.883895e+000, -4.992432e+000, 5.353451e+000, 3.438238e+000, 3.638162e+000, 1.346447e+000, 2.300582e+000, 1.788814e+001, -7.952843e-001, -2.274624e+000, -1.353436e+001, 1.896269e+001, 9.618281e+000, 1.013421e+001, 8.609238e+000, 7.299975e+000, 5.888060e+000, 8.283907e+000, -6.299779e+000, 1.679346e+000, 4.926871e-001, 2.124324e+000, 2.774586e+000, -2.496690e+000, -5.070196e+000, -1.825712e+000, -7.639814e+000, 2.244863e+000, -4.411416e+000, 1.450648e+000, -5.752814e+000, 2.641885e+000, -2.941796e+000, 8.797523e+000, 2.832709e+000, -7.648397e-001, 4.920938e-001, 9.047827e-001, -1.381280e+000, -1.859302e+000, 1.359464e+000, -2.534987e+000, -1.242624e+000, -5.324192e+000, -1.576602e+000, 1.409439e+000, -8.085283e-001, 2.432162e+000, 3.000368e+000, 3.363954e+000, 4.004347e+000, 3.075521e-001, 6.603053e+000, -3.204228e+000, -4.919110e+000, -3.333790e-001, -4.622780e+000, -3.194789e+000, 1.596985e-002, -7.655583e+000, 1.234567e+000, 1.068836e+000, -8.983289e+000, 9.517848e-001, -1.295880e-002, 2.463234e+000, -5.617900e-001, 3.847399e-001, 9.201760e+000, -7.221249e+000, -4.047899e-001, -7.519602e+000, 6.185674e+000, -4.541682e-001, 3.966204e+000, 3.077546e-001, -1.485718e+001, 7.081877e+000, 2.384832e+001, 1.242396e+001, -4.253086e+000, 2.119175e+001, -3.981102e+000, -3.270889e+001, -9.502518e+000, 1.273707e+001, -9.761106e+000, -6.952449e+000, 6.074030e+000, -1.289793e+001, -4.800554e-002, 6.335880e+000, 1.508972e-002, -1.046721e+001, -9.724390e+000, -7.533486e+000, 1.257100e+000, 6.711006e-001, 3.489591e+000, 2.914354e+000, 2.577426e-001, 6.299737e+000, -9.849116e+000, -5.773258e+000, 6.244463e+000, -4.220913e+000, 2.200493e+000, -5.599257e-001, -2.422053e-001, -1.254547e+000, -8.885467e+000, 1.981942e+000, -1.587897e+000, -4.345911e-001, -8.651619e-001, 3.294162e+000, -6.822343e+000, 4.598631e+000, 1.685065e+000, -5.731225e+000, -4.403621e+000, -1.196783e+000, -2.564857e+000, -2.685692e+000, -1.843181e+000, 1.926365e+000, -3.179511e+000, 6.444780e+000, -3.433230e+000, -1.547085e+000, -1.113357e-001, -1.313800e+000, -4.345329e+000, -1.761766e+000, -5.589748e+000, -4.794349e+000, -1.662306e+000, 5.658342e+000, -4.445843e-001, 1.124320e+000, 2.475111e+000},
{5.115250e-001, -4.042789e+000, -1.870004e+000, -2.435809e+000, -3.469610e+000, 1.408198e+000, -3.430573e+000, -6.101106e+000, 1.050201e+000, 2.385772e+000, -7.791355e-001, 1.086295e+001, 1.251079e+001, -6.950393e+000, -1.430548e+001, 1.293254e+000, -1.080370e+001, -1.581200e+001, -2.771412e+000, -1.404255e+001, 5.666576e+000, -1.489647e-001, -


© ISO/IEC 2004 — All rights reserved

Copyright International Organization for Standardization
Provided by IHS under license with ISO
No reproduction or networking permitted without license from IHS
Not for Resale

1.186453e+001, -5.955578e+000, 8.430225e+000, 1.077143e+001, 9.131925e+000, 6.692146e+000, 3.457349e-001, -4.574645e+000, 1.678191e+000, -2.191048e+000, 6.087260e+000, -2.912193e+000, -2.813036e+000, 5.330888e+000, -2.953318e+000, -6.131707e+000, 1.022569e+001, -4.167904e+000, 1.647363e+000, -7.637638e-001, 4.929245e+000, 2.576607e+000, 1.152769e+000, 3.493823e+000, -2.238879e+000, 1.164812e+000, 8.973351e-001, 6.057581e+000, -7.189249e+000, -1.441539e+000, 2.367441e+000, 1.791670e+000, 1.076540e+000, -2.025424e-001, 2.721305e+000, -1.215724e+000, 3.867061e+000, 5.689347e+000, 2.493650e+000, -4.205982e+000, 4.261357e-001, 2.581027e-001, 1.949911e+000, -2.056366e+000, 4.835654e+000, -1.945655e+000, -3.859078e+000, 4.387521e+000, -1.560131e+000, -4.310365e+000, 3.091070e+000, 2.708240e+000, -4.814053e-001, -3.688450e+000, -3.405681e+000, -5.036662e+000, 5.117617e+000, 2.311485e+000, -2.386546e+000, 2.210883e+000, 2.114133e+000, -4.096396e+000, -3.865091e+000, 1.963838e+001, -2.978659e+000, -6.363189e+000, -4.804982e+000, 2.479025e+001, 6.970680e+000, -1.751115e+001, -9.864560e+000, -7.600182e+000, 1.967924e+001, 2.061952e+001, 2.307483e+001, -8.974561e+000, -9.195301e+000, -4.841209e+000, 1.903486e+000, 1.507564e+000, -1.706877e+001, 1.939179e+000, 1.399834e+001, -7.680212e+000, -1.024821e+001, 5.228723e+000, -9.340559e+000, 5.367910e+000, 3.547058e+000, -5.144115e+000, -4.076616e+000, 1.553037e+000, -6.065668e+000, -1.156420e-001, -3.387630e+000, -2.179825e+000, -6.555980e+000, -1.218898e+000, 4.565929e+000, 1.453684e+000, 8.958735e+000, 1.050332e+000, 1.163959e+000, 5.723018e+000, -2.812319e+000, 6.214136e-001, -1.880557e+000, -5.109504e+000, -1.075254e+000, -3.804486e+000, 7.409011e-001, 2.727596e+000, -6.982932e+000, -4.975717e+000, -1.840885e+000, -2.546564e+000, 5.567974e+000, -4.025489e+000, 2.134607e+000, 7.091796e-001, 6.395841e+000, -6.536539e+000, -5.920052e+000, 1.019987e+000, -1.458651e+000, -9.175054e-001, 8.931402e-001, -9.517988e-001},

{2.503822e+000, 1.766139e+000, -3.693858e+000, 2.138781e+000, -3.824615e+000, -1.508069e+000, 4.977635e+000, -1.630427e+000, -1.519514e+000, 2.203461e+000, 2.419527e+000, 1.196868e+001, -6.094158e+000, 5.612167e+000, 4.547782e+000, -4.513204e+000, -1.175387e+000, -7.511749e+000, -9.639933e+000, -7.648320e+000, -1.998115e+001, 1.699847e-001, 7.208856e-001, 1.135270e+001, 1.053535e+001, -4.192228e+000, 1.509571e+001, -9.068974e+000, -4.206786e+000, -3.154417e+000, -1.840499e+001, -4.336199e+000, -3.815057e-001, 4.877097e+000, -7.944327e+000, -6.056981e+000, -2.785392e-001, 4.956625e+000, 2.124966e+000, -3.074709e+000, 8.232975e-001, -6.303074e+000, 9.593534e-001, 2.968663e+000, 5.916841e+000, 4.050617e+000, 2.518195e+000, -1.823592e+000, -2.047267e+000, 1.442273e-001, 9.966078e-001, -5.118005e-001, 2.945457e+000, 2.352028e+000, 5.159636e-002, 1.282718e+000, 2.087786e+000, -2.183466e+000, 6.484442e-001, 1.257664e+000, 2.151766e+000, -2.844358e+000, -2.934952e+000, 1.213907e+000, 1.090949e+000, -3.353673e+000, -2.522371e+000, 6.383353e+000, -3.289646e+000, 8.497906e-001, -2.983002e+000, 2.698370e+000, 2.905748e+000, 1.378342e+000, 6.512474e+000, 2.506091e+000, 2.519379e+000, -2.198526e+000, 6.267707e-001, 1.375041e+000, -7.037262e+000, -2.567325e+000, -9.826638e+000, 5.615617e+000, -9.348779e+000, 1.291975e+000, -7.503836e+000, -9.174758e+000, 1.715520e+001, -1.703493e+001, 3.775251e+001, 1.931973e+001, 1.119907e+001, 1.581710e+001, 9.960202e+000, 6.870752e+000, 1.312083e+001, -5.376252e-001, -1.102075e+001, 4.802482e+000, 9.625073e+000, -1.205192e+001, 7.726087e+000, 7.186130e+000, -5.389203e-001, 8.544797e+000, 1.502469e+000, -4.827244e+000, 4.764908e+000, -6.636326e+000, 2.728816e-001, 1.344643e+000, -1.952349e+000, -2.480191e+000, 4.339002e+000, 6.176678e+000, -1.302745e+000, -2.680251e+000, 3.503232e+000, 4.140686e+000, -2.735686e+000, 2.355862e+000, 5.255365e+000, 4.353263e+000, -2.835160e+000, 7.792801e+000, -3.462406e-001, 5.677257e+000, -4.636190e+000, 5.444725e+000, 4.992787e+000, 2.225881e+000, 3.489014e+000, -3.617170e+000, -3.546254e+000, 3.230696e+000, 7.310536e+000, -3.145321e+000, -3.552995e+000, -6.182908e+000, -2.040010e+000, -4.662716e+000, 7.739441e-002, -7.464318e-001, -2.581944e+000, -1.168225e-001, -4.698883e+000, -1.389780e+000, -2.165002e+000, 3.061226e-001},

{-4.788704e+000, 3.323515e+000, 8.147162e+000, -6.982628e+000, 1.332603e+001, 3.340410e+000, -6.792213e+000, 5.869491e+000, 1.688783e+001, -9.070489e+000, -3.612903e+000, -4.052725e+000, 8.897573e+000, -1.382784e+001, 9.062247e+000, -1.382280e+000, 2.432245e+000, -5.113493e+000, 8.773073e-002, -7.699998e+000, -8.925724e+000, 1.103312e+001, 7.408086e+000, 1.181365e+000, 3.661514e+000, 1.348092e+001, -2.616024e-001, -1.176953e+001, 8.715831e+000, 7.760221e+000, -7.607844e-001, -3.503426e+000, 1.381110e+000, 1.177762e+001, 2.192745e+000, 3.525598e+000, 4.146108e+000, -4.773475e+000, 2.710588e+000, -6.329092e+000, -3.529003e-001, 6.068008e+000, 3.942844e+000, -3.990444e+000, 8.905366e+000, 7.912473e-001, 3.673106e+000, -5.398522e+000, 1.921940e+000, 7.018137e-002, 4.036269e+000, 9.931984e-001, -4.554687e-001, -2.870115e+000, 3.650343e+000, 6.064485e+000, 2.543470e+000, -5.650222e+000, 1.097521e+000, -9.267372e-001, -2.736328e+000, -8.692653e-001, 3.833454e+000, -3.243935e+000, -3.248615e+000, 1.134094e+000, -2.030990e+000, -1.099027e+000, -2.414760e-001, -2.741778e+000, 6.332085e+000, 2.213146e+000, -8.336394e+000, -8.641035e+000, -

© ISO/IEC 2004 — All rights reserved


Copyright International Organization for Standardization
Provided by IHS under license with ISO
No reproduction or networking permitted without license from IHS
Not for Resale

1.163211e+001, -4.830050e+000, -1.840045e+000, -2.615573e-001, -7.351876e+000, 6.758764e+000, 1.213237e+001,
6.530316e+000, -7.405561e-001, -5.602893e+000, -7.250933e+000, 8.170808e+000, 8.050960e+000, -1.487943e+000, -
3.140999e+000, 1.850436e+001, 5.739428e+000, 2.616440e+001, -6.421123e+000, -2.802836e+000, -2.790098e+001,
6.077031e+000, -5.825153e+000, 3.089010e+000, -1.677112e+000, 6.988998e+000, 3.313933e-001, -7.717128e+000, -
1.533316e+001, 2.817664e+000, 7.370336e+000, 8.986831e+000, 5.514231e+000, -1.841224e+001, -6.353883e+000, 4.185048e+000,
9.450964e+000, 5.500809e+000, -1.755802e+000, 5.582130e-001, 7.162166e+000, -6.014865e-001, 3.806515e+000, 1.119611e-001, -
2.108642e+000, -6.953900e+000, -8.240238e-001, -1.851301e+000, 5.889966e+000, -1.172210e+000, -4.406484e+000, -
3.521877e+000, -9.631448e-002, 5.744823e-001, -5.335024e+000, 7.141796e+000, -5.535278e+000, -7.448657e+000, 2.891973e+000,
-3.315594e+000, 1.820700e+000, -6.987327e+000, -5.778243e+000, -1.871147e+000, 1.824543e+000, -1.714445e+000,
1.116554e+000, -4.033349e+000, -7.620847e+000, 1.037750e-001, -3.033487e+000, -8.344409e-002, 2.367042e+000, -6.853362e-001,
5.864097e-001, -1.863842e+000},
{4.394693e+000, -2.952752e+000, 1.036968e+000, -7.821541e-001, 7.700504e+000, 1.013132e+000, -4.243547e-002, -
1.282648e+000, -4.121880e-001, 9.955529e+000, 1.900041e+000, 4.778805e+000, -8.354357e+000, -3.832598e-001, 1.169250e+001,
-7.424077e+000, -7.524470e+000, -3.174622e+000, 1.327129e+001, -1.946114e+000, -5.066482e+000, -5.122400e+000,
2.681996e+000, -4.199931e+000, -1.375723e+001, 8.252019e+000, -2.107228e+000, -2.063891e+000, -1.597320e+001, -
4.871743e+000, 2.882827e+000, 3.157222e+000, 2.021922e+000, 9.323267e-001, -5.447730e+000, 1.373069e+000, 1.337075e+000,
4.742694e+000, -1.493525e+000, -2.285149e-001, 9.433793e+000, 3.384972e+000, 9.898031e-001, -6.852807e+000, -2.677909e-002,
-5.526718e+000, 1.343706e+000, 3.090052e+000, -7.827095e+000, -5.272088e+000, 1.820599e-001, -4.235140e+000, -
3.031926e+000, 1.122777e+000, 4.608310e+000, -1.481395e+000, 3.159456e+000, -2.924096e+000, -9.445208e-002, 3.129759e+000,
-4.629805e-001, 1.158963e-001, -7.996811e-001, -2.273208e-001, 2.148893e-002, 1.659522e+000, 1.161494e+000, 1.060383e+000, -
2.973484e+000, 3.339975e+000, -5.368323e+000, -2.257067e+000, -1.098502e+000, -5.219661e+000, -5.162888e+000,
3.996929e+000, -1.058826e+000, -2.602955e-001, 6.990560e+000, 4.383723e+000, -5.159507e+000, 2.967726e+000, -
8.565074e+000, 5.197349e+000, 3.197194e+000, -7.205556e+000, -8.807308e+000, 1.092848e+000, 2.735943e+001, 7.746363e-001,
-2.628786e+001, -1.574468e+000, -7.937136e+000, -1.202012e+000, 9.182698e+000, -1.353475e+001, 2.254808e+001, -
5.142245e+000, -6.552216e+000, -2.239375e+001, 2.360346e+001, -1.270485e+001, -1.327718e+001, -1.521837e+000, -
3.929485e+000, 1.502642e+001, 9.412811e+000, -4.291606e+000, 5.060533e+000, 7.182287e-001, -6.787237e+000, 4.042687e+000,
8.195560e+000, -4.406813e+000, 3.941262e+000, -8.949912e+000, 2.147217e+000, -4.124953e+000, -9.923032e+000,
9.005989e+000, -3.261068e+000, 2.548073e+000, 4.692720e+000, -4.315916e+000, 3.494224e+000, -2.886660e+000, -
1.988661e+000, -4.892556e+000, 9.299803e+000, -5.155143e+000, -6.176252e-001, 2.217415e+000, -1.980618e-001, 5.070369e+000,
-1.561220e+000, -5.855574e+000, 1.182031e+000, 2.854108e+000, -7.295099e-001, 1.087690e+000, 3.255675e+000, 2.436740e+000,
-8.604206e-002, -4.007651e+000, 2.832934e-001, -2.885648e+000, 1.951832e+000, 9.206675e+000, 2.563283e+000, -4.271905e-001},
{5.410868e+000, -4.013683e-002, 2.569691e-001, 2.317599e+000, -5.168504e+000, 2.526766e+000, -4.497681e+000, -
2.155935e+000, 5.023872e+000, 7.472078e+000, -1.128109e+001, -5.597821e+000, 1.943768e+000, -1.127853e+001,
1.256018e+001, 5.189977e+000, 4.987789e+000, 3.709714e+000, 3.580893e+000, 2.454747e+001, -7.160116e+000, 3.488970e+000,
1.507037e-001, -2.619058e+000, 1.443922e+001, -2.330602e+000, 1.428420e+001, 8.633660e-001, 1.502041e+000, 8.705251e+000,
3.302938e+000, 1.361376e+000, 3.608379e+000, -1.155403e+001, -3.999778e+000, 2.066904e+000, -5.970594e+000,
1.562339e+000, -5.460854e+000, 9.828448e+000, 3.159890e+000, -1.015483e+001, 3.010463e+000, 1.028618e+000, 2.878747e+000,
6.667124e+000, 4.646204e+000, -5.837145e+000, 6.721834e+000, -3.170206e+000, 9.269010e-001, 1.546577e+000, 9.102381e-001,
2.936841e+000, -1.044164e-002, 5.397363e+000, -2.883477e+000, 3.818620e-001, 4.605305e-001, 3.151995e+000, 2.854190e+000, -
2.176606e+000, -2.827955e+000, -3.967772e+000, 5.011383e+000, -5.396825e+000, -2.208927e+000, -2.214418e-001, -
1.426724e+000, 1.452066e+000, -5.441770e+000, 7.352594e-001, 2.476792e-001, 4.241978e+000, 3.620161e+000, -3.551940e+000, -
5.505477e+000, 1.124092e+000, -6.430528e+000, -1.026176e+000, 2.626336e-002, 6.479955e+000, 6.095316e-001, -7.117296e+000,
1.008040e+001, -1.428105e+001, 2.679132e+000, 2.921134e+000, 7.195744e+000, -7.062596e+000, 4.336779e+000, -
1.637744e+001, -3.604610e+000, 2.493432e+000, -1.137881e+001, 5.555623e+000, 6.624312e+000, -8.628114e+000, -
1.304564e+001, -3.785093e+001, 8.588122e+000, 4.387345e+000, 1.533869e+001, 4.946856e+000, 2.528366e+001, -4.518820e+000,
4.943156e+000, -5.610719e+000, -6.536375e+000, -7.248640e+000, -4.276178e-001, 4.690536e+000, -8.853499e+000, -5.365871e-
001, -1.061915e+001, 1.207863e+001, 6.386371e+000, -5.463714e+000, -4.053926e-001, -7.236559e+000, 2.950876e+000, -
4.813988e+000, 4.775974e+000, -3.820316e+000, -6.715247e-001, -2.255625e+000, -2.698665e+000, 5.656709e-001, -


© ISO/IEC 2004 — All rights reserved
--`,,```,,,,````-`-`,,`,,`,`,,`---

Copyright International Organization for Standardization
Provided by IHS under license with ISO
No reproduction or networking permitted without license from IHS
Not for Resale

2.508675e+000, 6.257614e+000, 7.584077e+000, 3.455624e+000, 3.220926e+000, -1.922430e-002, 5.213493e+000, 4.557675e+000, -3.946018e+000, -8.374966e+000, -2.313863e+000, -5.370212e+000, 4.971227e+000, 1.929523e-001, -4.081592e+000, -1.180251e+000, 3.072392e+000, 1.929680e+000, -1.649401e+000, -3.755938e+000, 5.424216e-001, 3.352296e+000},
{-9.941712e+000, -1.873865e-001, -2.878552e+000, 7.946504e+000, 7.056913e+000, 3.915235e+000, -7.667814e+000, -2.472393e+000, 6.886440e+000, -5.135933e+000, 5.075782e+000, -1.731214e+000, 1.512845e-001, 2.470510e+000, 2.051381e-001, -6.150334e+000, 7.307579e+000, -8.489989e+000, -7.246352e+000, 1.874342e+000, -4.729420e-001, 1.946071e+001, -6.477360e+000, 7.905603e+000, -1.043865e+000, 8.636382e+000, -1.301039e+001, 3.032453e+000, -6.876543e-002, -7.746166e+000, 2.518689e+000, 2.208831e-001, 3.355132e+000, 7.266441e+000, -9.624545e+000, -9.145632e-001, -1.139500e+000, 1.157253e+000, -9.653152e+000, 4.884777e+000, 3.768871e+000, -5.648539e+000, 6.132327e+000, 1.218752e+001, 9.509972e-001, 1.483210e+000, -4.112923e-001, 4.138675e+000, 4.134541e+000, -2.691442e+000, -4.533447e-001, 5.432317e+000, 1.075344e+000, -7.937408e+000, 1.662326e-001, -3.597430e+000, -4.537453e+000, 3.016332e+000, 4.373747e+000, 2.000224e+000, 9.287257e-001, -4.876490e-001, -9.241357e+000, -1.896567e+000, 4.041566e+000, 2.038789e+000, -6.001901e-001, -2.779625e+000, -1.162989e+000, 1.916669e+000, 1.193040e+001, -4.151128e+000, 2.624224e+000, -2.773804e+000, 3.791984e+000, 5.913084e+000, -6.124713e+000, 3.904029e-001, 3.055730e+000, 7.735143e-001, 1.824091e+001, 1.117857e+000, 5.064548e+000, -4.404565e+000, -1.074629e+001, 8.209047e+000, 5.178881e+000, 6.002182e+000, 2.198128e+001, 1.342908e+001, -1.250757e+001, -1.249333e+001, 1.973867e+001, -6.929793e+000, 1.054840e+001, -9.993450e+000, 2.220079e+001, 9.055955e+000, -1.903770e+001, 1.026270e+001, -1.195889e+001, 7.888576e-001, 1.648876e+001, -1.931854e+001, -6.197362e+000, 4.416176e-001, -1.350933e+000, -8.412997e-001, -1.716965e+001, -5.554296e+000, -3.289458e+000, -1.812066e+000, 1.129449e+001, 8.438799e-001, -2.637275e-001, 1.259700e+001, 1.051794e+001, -3.178017e+000, -7.358663e+000, -1.671031e+001, -2.509820e+000, -4.724511e+000, 5.829260e+000, -6.177290e+000, -9.016538e+000, 2.614236e+000, -2.866607e+000, 7.993179e+000, -3.231826e+000, 3.956689e+000, 1.451360e+000, 5.267358e+000, 9.437700e-002, 2.929522e-001, -1.306451e+000, 2.201601e+000, 3.544998e+000, -1.922204e+000, 1.966579e+000, -2.523387e+000, 9.852696e-001, -1.993157e+000, 2.876233e-001, -1.628595e+000, -5.825656e+000, 1.354352e+000, -7.320234e-001, -1.721041e+000, 3.827507e+000, 4.242073e+000},
{-3.828323e+000, 7.037679e+000, 9.781665e-001, -2.516383e+000, 3.780009e+000, -7.931084e-002, -6.285033e+000, -6.481676e+000, 3.355044e+000, 3.073961e+000, 6.227549e+000, 4.508311e+000, 4.518685e+000, -9.968746e-001, -7.986674e+000, 9.493436e+000, -3.631370e+000, 7.622523e+000, 1.368182e+001, -5.813817e+000, 8.262226e+000, -2.749799e+000, 5.075171e+000, -1.663715e+001, 1.395827e+001, -7.903700e-002, -4.648730e+000, -4.606516e+000, -7.430654e-001, 2.072629e+000, -2.470110e+001, 1.480130e+000, -4.203910e+000, 2.115626e+000, 6.268148e-001, 1.112468e+000, -1.274301e+000, -5.678088e-001, 2.088596e+000, 2.557464e+000, -2.444213e+000, -2.183322e+000, 1.002252e+000, -6.655847e+000, 5.969011e+000, 5.800362e-001, 3.378954e+000, 6.423712e+000, 3.755291e+000, 1.625184e+000, -5.596552e-001, 5.895393e+000, 1.534227e+000, -7.470650e+000, 1.092516e+000, 8.082460e-001, 3.757970e+000, 1.082858e+001, -1.988831e+000, -7.280253e-001, -4.443769e-001, 3.773336e-002, -5.040330e-001, 4.313919e+000, 1.931447e+000, 2.473566e+000, -2.932565e+000, -9.499539e-001, 8.428330e-001, -3.611030e+000, 5.476219e+000, 8.147056e+000, -6.994057e-001, 2.709695e+000, -5.716563e+000, -8.260024e-001, -9.938283e+000, 5.501971e-001, 5.233722e+000, -2.031936e+000, 5.250184e+000, -7.311791e+000, 4.390870e+000, -7.213769e+000, -9.340051e+000, -1.380601e+001, -2.466474e+001, 1.291801e+001, 1.424777e+001, 1.168038e+001, 7.024513e+000, -1.445509e+001, 5.205582e+000, 3.059724e+001, -3.346211e+000, -2.127460e+001, -8.282073e-001, 1.237248e+000, -8.719204e-001, 1.904429e+001, -1.250824e+001, 1.268016e+001, -8.102815e+000, 1.335484e+001, 7.260891e+000, 5.580776e+000, 2.173922e+001, -3.140387e+000, -1.703022e+000, 1.478544e+001, 1.339503e+001, 7.181804e+000, -7.730986e+000, -2.129891e+000, -1.698991e+000, 1.088036e+001, -7.134382e-001, 8.721823e+000, 9.947536e+000, -1.178229e-001, 1.006622e+001, 4.721662e+000, 3.016649e+000, 1.236284e+000, 1.203108e+001, 2.885312e+000, -1.609026e+000, -2.907562e+000, -6.715999e+000, 2.046365e-001, 6.114410e+000, -5.958791e+000, 2.666384e+000, 6.529769e+000, 2.193744e+000, 2.049451e+000, 1.271759e+000, -5.267982e+000, 1.371276e+000, -5.837023e+000, -2.517094e+000, 4.186179e-001, 8.704988e+000, 1.154569e+000, 5.627961e+000, -1.958298e+000, -1.396273e+000, -8.569006e+000, -1.831718e+000, -2.617643e+000},
{5.782160e+000, 4.355501e+000, 6.547641e+000, 5.967694e+000, -8.636508e-001, 6.174818e+000, -8.937180e+000, 5.657553e+000, 7.662615e+000, -4.171142e+000, -1.889063e+000, -4.235201e+000, 2.156170e+000, -2.867092e+000, 2.218352e+001, 4.304061e+000, -9.371579e+000, 3.450129e+000, -1.362877e+001, -6.033573e+000, 2.977519e-001, 7.629857e+000, -8.779239e+000, 8.049012e+000, 8.490737e+000, 5.925689e-001, -2.175914e+000, 5.427486e+000, -1.661423e+001, -3.211887e+000, 1.661684e+000, 7.166983e+000, -7.436021e+000, -1.570736e+000, -1.592500e+000, -1.062911e+001, 4.179210e+000, -

© ISO/IEC 2004 — All rights reserved


--`,,```,,,,````-`-`,,`,,`,`,,`---
Copyright International Organization for Standardization
Provided by IHS under license with ISO
No reproduction or networking permitted without license from IHS
Not for Resale

8.700897e+000, -1.070757e+001, -4.781532e+000, 2.354255e+000, 1.809230e+000, -5.152604e+000, -2.674070e+000,
1.054246e+000, -2.790225e+000, 1.199884e+000, 6.692122e+000, 9.493628e-001, 6.385567e+000, 1.297155e+000, 3.496459e+000,
1.332129e+000, -3.195513e+000, 1.177033e+000, 9.797499e+000, 1.312315e+000, -4.007191e+000, 2.791817e+000, -5.279476e-002,
-6.602797e+000, 4.650082e+000, 1.254566e+000, -3.902487e+000, 3.207636e+000, -1.836451e+000, -2.138139e+000, -
2.220415e+000, 6.563274e+000, 1.764184e+000, -5.343004e+000, 4.992562e+000, -7.831029e+000, -2.218044e+000,
8.122565e+000, 2.250471e+000, -6.852961e+000, 2.971980e+000, -7.773264e+000, -1.750319e+000, 7.740220e+000, -
2.969735e+000, -1.375237e+000, -5.075032e+000, 9.276526e+000, -7.875310e+000, -5.617293e-001, -3.153051e+000,
6.150448e+000, 7.000788e+000, 5.222619e+000, -1.680521e+001, -1.611993e+001, -1.810900e+001, -3.075978e+000, -
9.079101e+000, 2.825166e+001, -4.813275e+000, 3.227825e+001, 1.431006e+001, -9.737272e+000, -7.624703e+000,
1.167246e+001, 2.626467e+001, -4.771283e+000, 1.215461e+001, 1.965821e+000, -1.031781e-001, 8.865595e+000, -3.176877e+000,
1.234683e+001, -4.916436e+000, 1.249316e+001, -2.805673e+000, 4.128922e+000, 6.009629e+000, -4.840316e-001, -
2.041945e+000, -7.611802e+000, -1.712288e+000, 5.283618e+000, -1.700815e+000, 3.568321e+000, -2.889342e-001,
6.018193e+000, -1.641277e+000, 4.235251e+000, 5.936108e+000, -8.660931e+000, 5.695195e+000, -1.446940e+000,
5.353438e+000, -6.490685e+000, -2.546504e+000, 5.236460e+000, 2.733582e+000, -3.132369e+000, -3.106523e+000, -6.268732e-
001, -1.458052e+000, -3.221074e+000, -1.818018e+000, -9.429281e-001, -3.724865e+000, -3.698789e+000, -8.000009e-001,
1.809657e+000, 9.411449e-002, 9.985326e-001, -5.403904e-001},
{-1.001139e+000, -1.599408e+000, 7.789710e+000, 6.263314e+000, -2.385734e+000, -6.678632e+000, 2.446517e+000, -
4.237797e+000, 7.227339e+000, -3.023092e+000, 1.060367e+001, 1.075556e+001, -8.781372e+000, -4.757719e+000, -
4.180163e+000, -2.383427e+000, -3.255354e+000, 1.667599e-001, 6.870625e+000, 1.944884e+000, 2.407729e+000, 1.547462e+001,
-1.820346e+001, 9.260377e+000, -1.899462e+001, -1.416975e+001, 1.945185e+001, 2.853743e+000, -1.273830e+000,
5.895842e+000, -5.290526e+000, -4.605190e-001, -6.490801e+000, 1.020554e+000, -5.058253e+000, 4.022672e+000,
7.944603e+000, -1.027662e+001, 3.970357e+000, 6.676376e-001, 6.434623e+000, 5.361635e+000, -2.582199e+000, -1.201038e-001,
1.437917e+000, -8.963184e-001, -7.348669e-001, -1.322302e-001, 1.689421e+000, -2.767824e+000, 4.097784e+000, -5.412960e+000,
1.471535e+000, 6.941012e-002, -2.858750e+000, 2.531939e-001, 3.811729e+000, -2.745917e+000, -6.082414e-001, 3.246368e+000,
1.049026e+000, -1.740656e+000, -1.220168e+000, -5.797711e+000, -1.473760e+000, -1.840014e+000, -4.946189e+000, -
7.221199e+000, -6.661200e+000, -4.116079e+000, 5.543704e-001, -1.914736e+000, -7.465852e+000, 3.468621e+000,
8.261825e+000, 6.826665e+000, 3.712195e+000, -5.381951e+000, 1.737202e+000, 2.953418e-001, 5.902163e+000, 5.237283e+000, -
9.352157e+000, 7.547161e+000, -1.226434e+001, -2.420534e+000, -1.394328e+000, -1.921509e+000, -6.356248e+000,
2.789998e+001, -1.710808e+000, 7.713835e+000, -7.650468e+000, -5.147012e+000, 8.114738e+000, -6.442244e+000, -
3.840625e+001, -1.074155e+001, -7.767363e+000, -9.133327e+000, 6.450720e+000, 6.015656e+000, 1.630353e+001,
5.913071e+000, -2.364122e+000, -2.499801e-001, 6.179318e+000, 2.492086e+000, 1.276608e+000, 3.410696e+000, -4.012920e-001,
1.128438e+000, 1.985538e+001, -8.160962e-001, 1.377597e+001, -5.825173e+000, 1.218786e+001, 1.072938e+000, -1.431205e+001,
-4.245506e+000, 8.656945e+000, 3.711713e+000, -2.503125e+000, -7.116211e-001, -6.638949e+000, 1.476386e+001, -
9.703593e+000, -1.086257e+000, 6.109968e+000, 4.646651e-001, 9.688646e+000, -6.610524e-003, -3.276320e+000, 2.739631e+000,
-3.799407e+000, 1.034241e+001, -2.220460e+000, -1.312649e-001, 7.058739e+000, 5.719761e+000, 2.671286e+000, -
3.737731e+000, -6.170096e-001, -6.763772e+000, -9.071312e-001, -6.327125e-001, 2.219979e+000, -8.319158e-001, -
1.994846e+000, -2.969336e+000},
{8.789893e+000, 2.058922e-002, 6.122989e-001, 1.436237e+000, 1.235334e+000, 1.256400e+000, -6.400074e-002, -2.467028e+000, -
1.402203e+000, -1.017000e+001, 7.733962e-001, -2.236167e-001, -6.356666e+000, -2.647387e+000, -4.001555e+000,
1.428118e+000, 4.645743e+000, -1.247629e+001, -4.992207e-001, 4.601651e+000, -2.210213e+000, 1.771735e+001, 4.430176e+000,
-3.853525e+000, 8.246000e+000, 9.406828e-002, 4.589799e+000, -8.694306e+000, -7.553391e+000, -1.577721e+001, -
5.771070e+000, -8.474895e+000, 7.642379e+000, 9.553462e-002, -4.552990e+000, 5.251198e+000, 3.965993e+000, -5.505275e-001,
-1.139423e+000, -7.427506e+000, -4.275991e+000, -8.097231e+000, -1.521598e+000, 3.056536e+000, 2.427696e+000,
3.769152e+000, -3.879089e+000, 6.320714e+000, 5.812543e+000, 5.483767e+000, -7.386030e-001, -1.722979e+000, -
3.069109e+000, 5.842373e+000, -6.916088e-001, 7.818328e+000, -2.530047e+000, 3.752541e-001, -5.252606e+000, 1.468813e-001, -
2.008516e+000, 3.765983e+000, 3.894159e+000, 1.686437e+000, -5.968668e+000, 5.555382e+000, 1.824507e+000, 3.572369e+000, -
1.513479e+000, 2.432397e+000, -9.512924e+000, 1.463200e+000, -2.059265e+000, -2.565569e+000, 3.177589e+000,
1.428149e+000, -2.696778e+000, 2.444489e+000, 1.095253e+000, -3.001438e+000, 5.169035e+000, -4.937341e-001, -


© ISO/IEC 2004 — All rights reserved

Copyright International Organization for Standardization
Provided by IHS under license with ISO
No reproduction or networking permitted without license from IHS
Not for Resale

2.696390e+000, 5.381664e+000, -8.829769e+000, -4.792969e+000, 2.002184e+000, -4.305891e+000, -2.597703e+001, -2.578812e+001, -1.816751e+001, -6.526310e-001, -7.643321e-001, 2.760023e+000, -7.274983e+000, -2.148928e+001, 9.050346e+000, -2.982556e+001, -1.231506e+001, 1.781776e+001, 8.958084e-001, -2.191239e+000, 4.321509e+000, -1.224269e+001, 1.166753e+001, 1.098108e+001, -1.801403e+001, -1.201713e+001, 1.209372e+001, 2.102415e+001, 1.902333e+001, -8.467057e+000, -5.333731e+000, 9.311291e+000, -4.003895e+000, -2.190756e+000, -9.271824e+000, 7.264336e+000, -6.418697e+000, 2.005840e+000, 6.648874e-001, 4.683733e-001, -5.607258e+000, -1.523819e+000, 7.211280e-002, 9.027314e+000, 2.538339e+000, -5.946154e+000, -3.534437e+000, -2.035526e+000, -2.215084e+000, 3.559847e+000, 3.176552e+000, 5.000388e+000, 2.027893e+000, -5.889751e+000, -3.183008e+000, 2.924829e+000, -4.066956e+000, -2.330134e+000, 4.461318e+000, -3.741014e+000, 4.617217e+000, -3.978193e-002, -4.120535e+000, -1.259679e+000, 4.307520e+000, 5.800712e+000, 5.655275e+000, 3.695799e+000},

{-5.801345e+000, 2.637915e+000, -4.058509e-001, 8.475091e-001, 2.814364e+000, 5.312832e+000, -8.293084e+000, -1.270343e-001, 3.721220e+000, -3.210845e-001, -7.954948e+000, 1.709678e+000, 3.718362e+000, -6.279614e+000, -3.447947e+000, -2.488670e+000, 8.518895e+000, -8.963707e+000, -1.740381e+001, -1.377957e+001, -1.856764e+000, -1.892023e+001, 1.249380e+000, 8.475095e+000, 6.591837e+000, -1.744160e+000, -8.547871e+000, 3.194382e+000, 1.046021e+000, 5.338758e+000, 7.893053e+000, -1.478021e+001, 7.721507e+000, 6.271998e+000, -4.038258e+000, 1.100163e+000, 6.248743e+000, 1.377137e-001, 3.077295e+000, 3.918796e+000, 3.550261e+000, 1.874373e+000, 7.092842e+000, -7.453211e+000, -1.171512e+001, 4.329733e+000, 5.786547e+000, 8.150620e+000, 2.910094e+000, -2.682083e+000, 2.409838e+000, 3.085995e+000, -4.961408e+000, -3.978523e+000, -1.309605e+000, 6.612666e-001, 1.548599e+000, -4.724576e-001, -7.941684e-001, -3.740107e+000, -2.027453e-001, 5.179314e+000, 5.469523e-001, -3.941898e+000, -1.200125e-001, -3.589128e-001, -1.223928e+000, -7.608107e+000, -6.793466e-001, 2.347262e+000, 8.262856e+000, 2.091989e+000, 1.645516e+000, -7.350596e-001, -3.382593e+000, 1.555492e+000, -7.152925e+000, 3.246313e+000, -3.715676e+000, -3.035446e+000, 6.562289e+000, 1.409910e+001, -2.958061e+000, -4.167852e+000, -1.771100e+000, -7.545932e+000, -3.275262e+000, 1.017599e+001, -3.071439e+000, -5.767406e+000, -1.538455e+001, 2.881199e+000, 2.254005e+000, 1.718807e+001, 9.090324e+000, 1.378411e+001, -1.687959e+001, -2.846530e+001, 2.090038e+000, -6.807497e+000, -1.819565e+001, 3.707838e-001, -1.041398e+000, 1.230452e+001, -1.268374e+001, 1.612750e+001, 1.777860e+001, -9.803903e-002, -2.782972e+000, 9.974772e+000, 2.119759e+000, -3.883996e+000, 1.147001e+001, 1.726125e+001, -1.115066e+001, -7.403800e+000, 1.279115e+001, 2.584486e+000, -4.594766e+000, -4.699569e+000, -8.082377e+000, -7.308027e+000, -8.261055e+000, 8.692467e+000, -3.077587e-001, -1.035038e+001, 7.455723e+000, 6.102909e-001, 1.284829e+000, 8.872064e+000, 4.875995e+000, 4.391912e+000, 1.151148e+001, 7.232118e+000, -1.631264e+000, 4.838919e-001, 5.619080e-001, -2.626214e+000, -3.980177e+000, -8.120090e+000, 4.349413e+000, 2.350820e+000, 3.122012e+000, -1.558349e+000, 3.332481e+000, 1.478762e+000, 3.459616e+000, 1.547251e+000, 1.305377e+000, 5.288939e-001},

{7.471351e+000, 1.839538e+000, 6.383949e-001, 7.710803e+000, 4.592055e+000, -1.895396e+000, 4.973875e+000, 2.622140e+000, 5.795788e-001, 4.089787e-001, -7.571010e+000, 2.138086e+000, -1.341490e+000, 1.497831e+000, -3.389792e-001, 1.372306e-001, -8.813481e+000, 4.907270e-001, -9.870609e+000, -1.235619e+000, -9.127338e-001, 1.105742e+000, -6.637184e+000, -1.385084e+001, 1.989799e+001, -2.472020e+000, 1.389929e+001, 2.224241e+000, -1.290125e+000, -3.797160e+000, -7.710274e-001, 1.393320e+001, -6.082416e+000, 3.520259e-001, 3.490095e+000, -8.443946e-001, 2.198237e+000, 7.850784e+000, -2.286025e+000, -9.278927e+000, 9.017088e+000, -4.456655e+000, 5.445085e-001, -3.962037e+000, 9.906668e-001, -3.943131e+000, -1.217278e+000, 1.147196e+001, 1.980002e+000, 5.800245e+000, -3.617494e+000, 3.083259e+000, 1.134695e+000, 7.310647e-001, 7.296273e+000, 2.438674e+000, 1.457608e+000, 2.256152e+000, 1.285132e+000, 2.651502e+000, 3.016737e+000, -1.436786e+000, -2.787235e+000, -1.385386e+000, -2.031683e-001, 8.519305e-001, 4.327450e+000, -7.894307e+000, -6.680279e+000, -3.832370e+000, -8.191708e+000, 4.131273e+000, -3.177592e+000, -9.294315e+000, 6.483729e+000, 4.995944e+000, 3.404916e+000, -5.202996e+000, -2.474677e+000, -6.200513e-001, -5.599244e+000, 4.820935e+000, 4.436769e-001, 1.382878e+000, 7.008713e+000, -8.777178e+000, 5.736528e+000, 9.282098e+000, 4.366728e+000, -4.445967e+000, -2.207328e+001, 7.529215e+000, 7.287330e+000, 9.380905e+000, -4.187378e+000, 9.162069e+000, -3.660049e+001, 2.410424e+001, -1.284534e+001, -4.814629e+000, -1.328027e+001, -2.004654e+001, -3.001184e+000, 1.092428e+001, 2.831401e+000, 6.034191e+000, -1.527014e+001, 7.119794e-001, -6.854334e+000, -9.793426e+000, 2.038615e+001, -3.203443e+001, 8.956636e+000, 3.614546e+000, -6.654892e+000, 1.451029e+001, -3.953748e+000, 6.330480e+000, -1.092164e+001, 1.372684e+001, 6.439680e+000, 6.957174e+000, 1.171633e+000, -3.931780e+000, 3.466076e+000, 1.119443e+001, -6.394516e-001, 5.507387e-001, -7.641868e-001, 7.006021e+000, -4.626804e+000, -4.455363e+000, -3.503122e+000, 2.204510e+000, 1.457158e+000,

© ISO/IEC 2004 — All rights reserved


Copyright International Organization for Standardization
Provided by IHS under license with ISO
No reproduction or networking permitted without license from IHS
Not for Resale

-4.251677e+000, 3.359203e+000, 1.100435e+000, -5.982741e-002, -3.971067e+000, 5.907652e+000, 2.319508e+000, 1.860255e+000, -2.839949e+000, -1.665303e+000, 7.341202e-001, 1.413568e+000, -9.302825e-001, 3.669109e+000, -2.004110e+000},
{-7.317904e-001, 1.027828e+000, 2.325827e+000, 3.331717e+000, -5.024295e+000, 1.908846e+000, 6.091980e+000, 1.612632e+000, -8.753332e+000, -7.214400e+000, 4.019368e-001, 6.348010e+000, 8.347344e+000, -8.632415e+000, -1.013117e+001, 3.760911e+000, -8.610242e+000, 3.501766e+000, -1.014443e+001, -7.041692e+000, -1.517205e+000, 5.090990e+000, -1.734548e+001, 1.345666e+000, -1.110526e+001, 1.231729e+001, 1.044002e+001, -1.248616e+001, 5.636931e+000, 4.863131e+000, 8.587307e+000, 2.788578e+000, 1.397300e+001, 1.053757e+001, -1.821019e+001, -1.125830e+001, -3.023520e+000, 8.086623e+000, 6.256604e-002, -3.391381e+000, 2.563363e+000, 2.817822e-001, -4.331318e+000, -5.860622e+000, -4.367519e+000, 4.426301e+000, -4.224068e-001, -1.884317e+000, -7.208585e-001, 1.899530e+000, 5.466787e+000, -5.015782e-001, 4.646417e+000, 3.014484e+000, -8.665670e-001, -4.402408e-001, -4.054088e+000, -9.689284e-001, -1.381413e+000, 2.252897e+000, -3.939059e+000, 7.642533e-002, 4.897870e+000, 1.113395e+000, 2.250259e+000, 4.843656e+000, 6.016093e+000, 2.598352e+000, -2.679475e+000, 6.703325e+000, 3.989833e-002, 3.913464e-001, -1.067588e+000, -1.316380e+000, 5.884615e+000, -2.435646e+000, 1.999035e+000, 4.152864e+000, -1.546809e+000, 5.847743e+000, -4.972450e+000, -4.857469e+000, 6.361652e+000, 9.680844e+000, -7.818507e+000, -1.226830e+000, 4.127325e+000, 2.947462e+000, 7.370001e-001, -9.740306e+000, -6.001926e+000, -1.044968e+001, 2.446284e+000, 1.511330e+001, -2.156230e+001, -3.575422e+000, 4.294320e+000, 1.181294e+000, -1.909802e+000, -4.420590e+000, 1.746644e+001, 1.159676e+001, -3.698733e+000, 1.618337e+001, -2.357621e+001, -1.560977e+000, -1.693264e+001, 2.034038e+001, 5.339746e+000, 9.529920e+000, 4.277957e+000, 1.130493e+001, 3.821267e+000, -1.276443e+001, -2.149591e+001, -3.340526e+000, 9.216749e+000, -4.256021e+000, -1.972536e+001, -3.286205e+000, -2.586237e+000, -1.361582e+001, 1.433799e+001, -5.954779e+000, 1.593412e+001, 7.920757e+000, 3.486472e+000, 8.102847e+000, 6.783618e+000, 1.421428e+000, 2.523798e+000, 4.762386e-001, 5.269825e+000, -1.304352e+001, 1.707600e-002, 3.662051e-001, 3.276686e+000, -9.525268e+000, -8.903796e+000, -1.477044e+000, 2.555053e+000, -1.349519e+000, 8.088968e-001, -1.033775e+000, 5.490692e-001, 5.926997e+000, 4.396903e+000, -3.035165e+000, 1.279182e-002, -2.192287e+000},
{-3.401530e-001, 9.999180e-001, -6.749123e-001, -3.351817e+000, 1.068505e+000, -3.402346e+000, 4.461094e+000, -2.068100e-001, -6.224291e+000, 8.929429e-001, -7.285785e+000, 4.322971e+000, 8.259213e+000, 1.243455e+001, 1.609500e+001, 3.741377e+000, 2.450495e+000, 1.698775e+000, 1.382607e+001, -4.544808e+000, 6.156595e+000, 2.523230e+000, -1.494234e+001, -2.159391e-001, -2.273217e+000, 2.817194e+000, -7.964081e+000, -4.452920e-001, 4.001506e+000, 1.137179e+001, 1.158026e+000, -1.572753e+000, 1.046452e+001, 9.875486e+000, 1.017457e+001, 1.291192e+000, 7.605782e+000, 8.184264e+000, -1.009253e+001, -1.314890e+001, 5.664045e+000, 8.430746e+000, -8.529039e+000, 4.484113e+000, -4.710028e+000, -2.305471e+000, -5.533170e-001, -8.724089e+000, 5.534571e+000, -3.418607e+000, 3.644542e+000, -7.086418e+000, 3.926535e+000, 2.403150e+000, 1.288170e+000, 2.849914e+000, -4.299170e+000, -4.096455e-001, -6.766346e+000, 6.246859e+000, 1.034615e+000, -2.799317e+000, 4.466455e+000, 3.446084e+000, -1.177693e+000, -9.948421e-001, 1.571334e+000, 1.052205e+000, -9.637728e-001, 9.479997e-001, 3.549511e-001, 1.207985e+000, 1.676270e+000, -1.381810e+000, -2.780516e+000, -1.038511e+000, 4.641781e+000, -2.288977e+000, 2.680912e+000, 7.475127e+000, -6.992769e+000, 1.109935e+001, -2.604787e-003, -7.058932e+000, 2.903788e-001, -1.050560e+001, -9.311323e+000, 1.437070e+001, 6.189107e+000, 3.973093e+000, -5.988077e+000, 1.064797e+001, 6.324148e+000, -4.387203e+000, 3.867165e+000, 1.485912e+001, -6.218381e+000, -2.318902e+001, 2.110486e+000, 2.373713e+001, -1.524707e+001, -2.174462e+001, 6.602778e+000, -1.245800e+001, 7.207817e+000, -2.141929e+001, 1.859433e+000, 1.244177e+001, 1.080301e+001, -4.332802e+000, 3.323025e+000, 1.539520e+001, -3.371275e+000, -2.695699e+001, -1.717353e+001, 5.404228e+000, -6.460552e+000, -3.191475e+000, 1.657599e+000, -6.910748e+000, -8.310087e+000, 4.045651e+000, 5.502087e+000, -1.581119e+001, -3.524427e+000, 7.939832e+000, -8.371785e-001, 4.639175e+000, 1.340727e+001, -8.219964e+000, -3.223661e+000, -3.766917e+000, -7.573060e-001, -2.208368e+000, 3.839426e+000, -1.637468e+000, -2.754645e+000, 1.102691e+000, 4.123737e+000, 2.172027e-001, 4.401249e+000, 9.253687e-001, -4.118060e+000, -4.051975e+000, 5.880426e+000, 3.379655e+000, -3.240878e+000, 7.003600e+000, 4.236029e+000, -2.162964e-001},
{9.083835e-002, -3.268415e-001, -5.142766e+000, -3.605301e+000, 3.884899e-001, 8.777593e+000, -6.834661e+000, -1.089188e+001, 1.052609e+001, -2.723124e+000, 6.446004e+000, 3.056566e+000, 3.262964e+000, -9.635351e+000, -2.462972e+000, 3.201959e+000, 1.092371e+001, 7.500622e+000, 4.847003e+000, -1.074414e+000, -1.704443e+001, -6.973741e+000, -5.769497e+000, -1.070457e+001, -5.199549e+000, -6.453089e+000, 6.351504e+000, 4.115998e+000, 1.032085e+001, -6.799109e+000, -6.555572e+000, -1.772910e+000, -1.022221e+000, -5.301316e+000, -1.606256e+001, 4.559434e+000, 7.592740e-001, 2.009065e+000, 3.138888e+000, -5.204820e+000, -6.223540e+000, 1.258713e+001, 7.180869e+000,


© ISO/IEC 2004 — All rights reserved

Copyright International Organization for Standardization
Provided by IHS under license with ISO
No reproduction or networking permitted without license from IHS
Not for Resale

8.233471e-001, -3.441427e+000, 5.303313e+000, -6.717202e+000, 1.944579e+000, 1.511325e+000, 5.006844e+000, -1.112009e+001, 9.517658e-002, -9.017014e-001, 3.205900e+000, 2.162827e+000, -5.380730e+000, -5.995984e-001, -5.509100e+000, 5.382394e+000, 4.254256e+000, -4.258777e+000, -4.414133e-001, 8.769993e+000, -4.159992e-001, -1.684166e+000, -1.992102e-001, 2.143539e+000, 2.923040e+000, 4.533933e+000, 1.806409e+000, 7.634339e-001, 5.305449e-001, 4.196003e+000, 2.909545e-001, -3.183330e+000, -9.317099e+000, -5.146453e+000, -1.271290e+000, 2.595000e+000, -6.309464e+000, 1.263857e+001, -2.565585e+000, -2.427163e-001, 3.858168e+000, -4.723242e+000, 4.123991e+000, -1.637791e+000, 1.305089e+001, 3.283016e-001, -9.963566e+000, 1.275315e+000, -1.572139e+001, -1.373925e+001, -1.232217e+001, -1.011249e+000, 7.410106e+000, 3.637822e+000, 3.554680e+000, -3.934851e+000, 1.141047e+001, -1.268544e+001, -1.970579e+001, -8.269732e-001, 2.694465e+001, -1.222886e+001, -1.999452e+001, -1.731717e+001, -1.649832e+001, -1.256749e+001, 4.765234e+000, -1.270352e+001, 2.657048e+001, 8.293282e+000, 1.090925e+001, -4.942893e+000, -1.786205e+001, -1.746539e+001, 1.343628e+001, 1.161204e+001, -4.041616e-001, -2.540179e+000, -1.743066e+000, -7.129580e+000, -4.652887e+000, -4.494641e+000, 5.736312e+000, -6.070327e+000, -9.540694e+000, -9.477718e+000, -1.527849e+000, -1.579885e-001, 5.657290e-001, 3.385811e+000, -5.762804e+000, 4.878686e+000, 5.293640e+000, -1.162475e+000, -1.670304e+000, 8.354883e+000, -3.735482e+000, 2.968464e+000, 1.024780e+000, -6.745150e+000, 9.578401e-001, 4.209722e-001, -3.397436e+000, -8.354855e+000, 7.383986e-002, 5.152392e+000, -6.081983e+000},
{-6.848446e+000, -1.674289e-001, 1.117651e+000, 2.798789e+000, 2.850345e+000, 4.770773e+000, -1.604300e+000, -2.077175e+000, -6.958237e-001, 1.053984e+001, 6.584934e-001, -4.821203e+000, -1.272638e+001, -6.485963e+000, -1.022829e+001, 1.500039e+000, 5.023980e-001, 6.173016e+000, 5.850531e+000, 4.652589e+000, 1.400774e+001, -2.671972e+000, -1.362111e+001, -1.903464e+000, 2.642125e+000, 3.931533e+000, -7.340859e+000, 3.915666e+000, 7.185625e-001, 1.187464e+001, 7.058760e+000, -1.928727e+001, -2.387862e+001, 1.849134e-001, 5.725703e+000, -4.237638e+000, 9.332166e+000, 1.851860e+001, 1.674316e+000, -1.071924e+000, -1.662064e+000, 2.087698e+000, 5.872324e+000, 4.107538e+000, 6.328718e+000, -1.838304e+000, 3.671096e+000, 6.844799e+000, -1.033804e+001, 6.638467e+000, 3.142641e+000, 8.158345e+000, -1.193933e+000, 2.677709e-001, -1.143748e+000, 2.560220e+000, -3.877008e+000, -2.452509e+000, -1.071747e+000, 2.308484e+000, -4.610423e+000, 6.740613e-001, 4.543847e+000, 5.301083e-001, 5.213045e+000, -6.719631e-002, -3.736584e+000, -4.917880e-003, 6.412234e+000, 1.310897e+000, 8.909333e+000, -2.279018e+000, -6.537149e-002, -2.019238e+000, 9.050694e-001, -8.368058e-003, -9.798743e+000, -1.193791e+000, 1.115623e-001, -1.926845e+000, 9.468113e-001, -7.863285e+000, -4.410532e-002, 6.872894e+000, -1.088883e+000, 2.648971e+000, -1.126495e+001, 5.776434e+000, -1.541478e+001, -1.770412e+001, 3.494416e+000, 6.401061e+000, -1.767320e+001, 1.126340e+001, -1.519675e+000, 1.445185e+001, 2.707808e+001, 4.962983e+000, -1.670199e+001, 1.375797e+001, -1.826760e+000, 8.185386e+000, -2.644703e+000, 4.523945e+000, 5.418613e+000, 2.898651e+001, -8.182889e+000, 8.709411e+000, 4.103701e+000, -2.028867e+001, -3.508802e+000, 5.944147e+000, 1.391274e+001, -2.588138e+000, -9.214178e-001, 5.537728e+000, 9.802368e+000, 5.641422e+000, -1.053788e+001, -4.315125e+000, 1.674910e-001, 5.588531e+000, 9.007778e+000, -6.565488e+000, -6.722932e+000, -1.094000e+001, -1.237619e+001, 1.033221e-001, 1.186533e+001, -4.905037e+000, -3.712630e+000, 9.935630e+000, 2.278114e+000, 6.960105e+000, 6.799140e+000, 2.949751e+000, -6.266998e+000, 9.081282e+000, 3.587781e+000, -1.176569e+000, -3.624488e+000, -1.213275e+000, -3.889921e+000, 4.657961e+000, 1.245285e+001, -5.834376e+000, -1.521937e+000, 4.021067e+000, 1.512038e+000, -6.410334e+000},
{-3.914193e+000, -2.786815e+000, 6.972357e-001, -4.565575e-001, -8.857250e-001, -2.679109e+000, 2.551111e+000, 1.089560e+000, -3.845654e+000, 5.737632e+000, -1.112654e+000, -7.257035e+000, 4.345138e+000, -7.988713e-001, 1.732567e+000, 1.324831e-001, -4.707590e+000, 5.520766e+000, 3.950691e+000, 5.180122e+000, -7.117956e+000, -3.956696e+000, 1.520524e+001, 6.028891e+000, 3.580109e+000, 1.446119e+000, 1.589568e+001, 7.015679e+000, -4.993010e+000, -2.764575e+000, 1.079176e+001, -4.523967e+000, -2.521547e+000, 2.062869e+001, 1.163197e+001, -9.385242e+000, -7.282866e+000, 6.098728e+000, 4.870181e+000, 3.092675e+000, -1.083577e+000, 3.242947e+000, -9.034635e-001, 4.324788e+000, 3.741103e+000, 4.019672e+000, -3.651302e+000, -3.977306e+000, -2.204009e+000, 3.413272e+000, 9.309650e-001, 4.050828e+000, 4.557451e+000, 2.212314e-003, 1.839431e+000, -5.196992e+000, 6.639841e+000, 4.699183e+000, -9.495785e+000, -1.098947e-001, 1.221198e+000, 2.480469e+000, 5.898625e+000, 3.591035e+000, 1.669541e+000, 3.435319e+000, -2.952784e+000, -8.738823e-001, 8.661319e-002, -2.489231e+000, 3.606303e+000, -3.369144e+000, 2.597948e+000, 2.436346e+000, 2.545892e-001, -5.541441e-001, 1.087170e+000, -7.580966e-001, 3.299886e+000, 4.286363e+000, -8.614051e+000, -3.085230e+000, -1.790688e+000, -2.221253e+000, 8.536306e+000, 1.160009e+001, 1.080948e+001, -1.350521e+001, 1.684754e+001, 6.966426e+000, 1.663740e+000, -6.844002e+000, -1.089561e+001, 1.249161e+000, -8.023435e+000, 1.442183e+000, 1.056484e+001, -1.282474e+001, -2.800571e+001, -

© ISO/IEC 2004 — All rights reserved


--`,,```,,,,````-`-`,,`,,`,`,,`---
Copyright International Organization for Standardization
Provided by IHS under license with ISO
No reproduction or networking permitted without license from IHS
Not for Resale

5.654870e+000, -3.688588e+001, -2.762303e+000, 6.469608e+000, -1.755644e+000, -1.650730e+001, -2.525140e+000, -1.411598e+000, 1.038242e+001, 1.695338e+001, 1.515582e+001, 1.443522e+001, -3.083302e+000, 3.675463e+000, -6.886694e+000, 2.602788e+001, -4.268337e-001, 4.379594e+000, 1.066898e+000, 3.481030e+000, 3.558996e+000, -6.539783e+000, 1.935514e+000, -4.729891e+000, 7.257284e+000, 2.968224e+000, -3.495509e+000, 1.831485e+000, 3.677239e+000, 4.587909e+000, -7.940949e+000, -2.342912e+000, -9.394892e+000, -4.652073e+000, -6.306088e+000, -2.374336e+000, -5.277071e+000, -6.639515e+000, 4.829655e-002, 4.765754e+000, 2.840487e+000, -1.898259e+000, 2.112850e+000, 5.694380e-001, 9.811528e+000, 3.277529e+000, 6.984287e+000, -3.296445e-001, 2.253373e+000, -9.523109e+000, -3.611037e+000},
{1.597282e+000, 7.050086e+000, 4.252544e+000, -2.874305e+000, -8.678688e+000, 2.153032e+000, -4.171596e+000, -3.621645e+000, -4.054894e+000, -7.721897e+000, -2.622163e+000, -1.558258e+000, 1.423386e+000, -6.961694e+000, -3.597770e+000, -2.615645e+000, -1.155565e+001, -1.512674e+001, 3.252340e+000, 1.597178e+001, -6.069673e+000, -5.429076e+000, -4.004584e+000, -1.238812e+001, -1.121141e+001, 1.170258e+001, 7.433052e+000, -6.183217e+000, -1.563160e+001, -2.843554e+000, -8.920653e-001, -1.062254e+001, -6.299094e+000, -1.588627e+000, 1.072154e+001, -1.973137e+001, -4.592492e+000, 1.609895e-001, -5.518728e+000, -7.743063e+000, -3.382083e+000, -2.368535e+000, 1.174889e+001, -3.020215e+000, -3.151997e+000, 2.704580e+000, -2.751094e+000, -3.728850e+000, -7.413033e+000, 7.900474e-001, 3.127202e+000, 8.448811e-002, 2.498349e+000, 1.151438e+001, 3.363518e+000, 5.828092e-001, 7.304646e+000, 9.553078e-001, 1.379355e+000, 3.809197e+000, 1.866278e+000, 5.233040e+000, 4.386256e+000, -4.058581e+000, 1.757494e+000, -1.542049e-001, -2.688612e+000, 2.113728e+000, -5.080506e-001, -9.740204e-001, -7.619073e-001, 7.849792e+000, -1.945665e+000, 7.079803e+000, 3.196817e+000, -7.851220e+000, -4.338702e+000, 1.744997e+000, -3.627495e+000, -6.750390e-001, -5.474290e+000, -7.992070e+000, 4.866385e-001, -2.180952e+001, -7.743822e+000, 4.978350e-001, 5.164945e+000, 1.270580e+000, -9.578707e-001, -6.666082e+000, 4.617998e+000, 1.884168e+001, -2.157204e+000, -3.177409e+000, 1.437111e+001, -1.050638e+001, -1.049294e+001, 1.683846e+001, 7.009809e+000, -1.044850e+001, -1.998775e+001, -6.575342e+000, 1.183966e+001, -1.203058e+001, -4.966766e-001, 6.863803e+000, -1.157166e+000, -3.359746e+001, 1.695321e+001, -6.281365e+000, -3.903690e+000, 3.660893e+000, -6.477100e+000, -8.722789e+000, -2.660879e+001, -1.495666e+001, 1.741636e+000, 9.513877e+000, -1.828080e+000, -1.145763e+001, 1.567557e+000, -7.451156e+000, 1.499689e+001, 9.164203e+000, 1.156479e+001, -3.124130e+000, 5.915267e+000, -6.245864e+000, 4.275793e+000, 6.105467e+000, 4.351927e+000, 5.023320e+000, 7.843930e+000, -5.752553e+000, -1.133137e+000, -9.780771e+000, -1.023424e+001, 2.283462e+000, 2.269008e+000, 1.437050e+001, -4.223335e+000, -8.184396e+000, 6.575607e+000, 1.928726e+000, 6.741553e+000, -3.487326e-001, -4.416658e+000, 1.254204e+000, -6.999958e-001, -6.727581e+000},
{-5.227381e+000, 3.989978e-001, -7.589356e+000, -3.293046e+000, 8.264362e+000, 5.475888e+000, -1.077186e+000, -1.129630e+001, -6.174490e+000, -1.614511e+000, -8.784856e+000, 8.440727e+000, -7.697175e-001, -5.607876e+000, -3.944854e+000, 4.847516e+000, -8.365180e-002, 7.217321e+000, 4.893796e+000, 1.451138e+001, 1.051502e+001, -1.214009e+001, -6.914314e+000, -1.683273e+000, -2.537635e+001, 1.244978e+001, 1.723584e-001, 2.474464e+000, 1.235794e+001, -9.443648e+000, -1.087385e+001, 5.077200e+000, -4.709122e+000, 2.037714e+000, -3.307845e+000, 1.314088e+000, 1.033415e+001, -2.346362e-001, -1.453136e+000, 4.102329e+000, -2.268704e+000, -1.325574e+001, 5.789973e+000, 2.943506e+000, -4.720908e+000, -3.279089e+000, 6.940122e+000, 8.778891e+000, 5.766628e+000, 1.187392e+001, -4.088665e-001, 5.702344e-001, 1.307190e+000, 1.159430e+000, 5.222964e+000, -3.817623e+000, -4.912214e+000, 4.737814e-001, 4.641754e+000, -2.622122e+000, 1.393465e+000, 4.519195e+000, 2.960699e+000, 4.282033e+000, 4.286857e-001, -3.280687e+000, 2.484492e+000, 6.618449e+000, 3.323343e+000, -4.273743e-001, 5.508570e+000, -3.841331e-001, 5.728921e+000, -7.488575e+000, -6.219148e+000, -8.105391e+000, -5.022416e+000, -4.005611e+000, 1.441896e+001, -1.226915e+000, 2.901020e-001, -2.505242e+000, -3.943559e-001, -5.022241e+000, -1.039868e+000, -3.717785e-001, 1.310429e+001, 4.363815e-001, -2.576295e+000, 2.306378e+000, 2.115287e+001, -6.742285e+000, 9.448677e+000, -4.987094e+000, -1.197397e+001, -2.038389e+000, 3.099492e+000, -1.504445e+001, 9.069947e-001, -4.511904e+000, 2.430937e+000, -2.884752e+001, 3.316612e+000, -1.934586e+001, 3.729207e-001, 1.811677e+001, 6.264992e+000, 2.535598e+001, -1.739352e+001, 1.767239e+000, 1.304285e+001, -5.385055e+000, -1.200155e-001, 1.066001e+001, -1.617501e+000, -8.284072e-001, -6.810831e+000, 1.151248e+000, -2.539847e+000, -5.761537e+000, 1.094545e+001, -6.354208e+000, -5.962754e+000, 1.245213e+001, 1.047886e+001, -1.468330e+001, -8.257524e+000, -1.241962e+001, 6.701230e+000, -7.366786e+000, 9.476681e+000, -1.190091e+001, -6.780592e+000, 4.753367e+000, -2.892367e+000, 1.327179e+001, 1.112800e+001, 4.749823e+000, 3.629382e+000, -1.504778e+000, -4.847131e+000, -


© ISO/IEC 2004 — All rights reserved

Copyright International Organization for Standardization
Provided by IHS under license with ISO
No reproduction or networking permitted without license from IHS
Not for Resale

2.249909e+000, -1.111896e+001, -7.723583e+000, 6.879479e+000, 9.021407e-001, 1.992814e+000, -3.051795e+000, -1.637518e+000, 2.291234e+000},
{1.633537e+000, 1.268114e+000, 3.593273e-001, -2.564263e+000, -3.467756e+000, 5.131621e-001, 1.204375e+000, 2.663968e+000, -7.705767e+000, -1.245784e+001, 6.220173e+000, -4.082080e-001, 4.075687e+000, 1.522005e+000, 2.105956e+000, -1.468207e+000, 1.599203e+001, 7.733014e+000, 1.187424e+001, -4.618773e+000, -2.601455e+000, 1.477304e+001, 3.495798e-001, 2.510320e+000, -3.379849e+000, 1.490265e+001, 5.456688e+000, 2.574795e+001, -1.476888e+001, 2.905570e+000, -8.424862e+000, 1.978288e+000, -1.159378e+001, 1.188867e+000, 2.343998e+000, 9.971318e+000, -5.347349e+000, -9.381910e-001, 5.475427e+000, 3.369293e+000, 3.175710e-001, 4.724906e+000, -1.792153e+000, 3.144426e+000, -5.347567e+000, -3.405151e-001, -5.794740e-001, 4.450945e+000, -1.468900e+000, -2.054764e-001, 4.446352e-001, 6.153515e-001, 1.140743e+000, 1.418954e-001, 2.224624e+000, 5.141203e+000, 3.374744e+000, -8.106943e+000, -3.887040e+000, 4.089224e+000, 3.720212e+000, 3.984263e+000, 6.497914e-001, -3.868133e+000, 2.068589e+000, 1.087793e+000, 4.713679e+000, -2.372747e+000, -4.881040e+000, -2.169736e+000, -1.767457e+000, 2.500646e+000, 8.233717e-001, 1.625645e+000, -2.958073e+000, -1.477573e+000, 3.800440e+000, 4.912766e+000, -3.147898e+000, 2.484181e+000, -3.308760e+000, -1.496417e-002, 7.268872e-001, -1.557667e+000, -4.373419e+000, -1.863150e+000, 4.246938e+000, -5.135027e-001, -7.777822e+000, -1.704797e+001, 4.156169e+000, 5.026735e-001, 1.029593e+001, 2.615146e+001, 1.475926e+000, 4.742078e+000, 1.742561e+001, -2.849698e-001, 1.995080e+001, -1.965902e+001, 2.852968e+000, 7.568297e+000, -4.257951e+000, 1.045766e+001, -5.709092e+000, -1.666626e+001, -6.662181e+000, -2.239031e+001, -5.315850e+000, -1.082900e+001, 3.290721e+001, 1.149710e+001, 3.849009e+000, 1.373176e+001, 2.310332e+000, -8.994905e+000, 4.558854e+000, -3.606660e+000, -4.581869e+000, 1.642791e+000, 3.968231e+000, 4.993768e+000, 4.299178e+000, 4.752612e+000, -2.380003e+000, -2.427041e+000, -2.575704e+000, 2.470411e+000, 1.104579e+001, -2.509242e+000, -1.055804e+000, 2.466039e+000, -9.100745e+000, -1.178195e+000, -8.292198e+000, -7.844525e+000, -8.821256e+000, -2.612706e+000, 5.093142e+000, 4.226832e+000, -2.956205e+000, 2.714726e+000, -4.723528e+000, -7.560283e+000, -9.742710e+000, -1.294761e+000, -9.608880e+000, 5.976426e+000, -2.769948e+000, -1.819996e+000},
{-3.115123e+000, -4.726208e+000, -3.456806e+000, 9.588180e-001, -2.594861e+000, 6.799353e-001, 1.476416e+000, 3.154932e+000, -1.567407e+000, 9.168439e+000, 3.511604e+000, 1.126435e+001, -6.797368e+000, 4.544695e+000, -5.124708e-001, -2.558846e+000, 7.091524e-001, -3.642603e+000, 2.621953e+000, 8.783771e+000, 1.542493e+001, -3.935875e+000, -4.480827e+000, 2.692857e+000, 1.808662e+000, 2.739411e+000, 1.419235e-001, -1.042747e+001, -1.464794e+001, 5.596874e+000, 3.888607e+000, -5.543116e+000, 5.009877e+000, -3.771308e+000, 2.044991e+001, 4.470761e+000, -2.244081e+000, -9.609103e+000, -8.165028e+000, 6.105093e+000, 9.728977e+000, -1.543417e+001, -1.147182e+000, -4.744421e+000, -3.326774e+000, 2.094195e+000, 7.342660e+000, -5.409461e+000, 4.461322e+000, 3.504861e+000, 6.799800e+000, 1.030690e+001, -1.124147e+000, -2.566455e+000, -5.491305e+000, -1.302692e+001, -2.712947e+000, 5.602310e+000, -2.086197e+000, -1.799012e+000, -2.604055e+000, -6.491274e+000, 3.579247e+000, -2.336674e-001, 2.538446e-001, 2.274943e+000, -4.190748e+000, -1.266629e+000, -1.078875e+000, 2.817442e+000, 2.487358e+000, -6.627188e+000, 3.953134e+000, 1.236908e+000, 1.698896e+000, 1.654813e+000, 3.253844e+000, 4.334486e+000, 9.376284e-001, 4.598772e-001, -6.123799e+000, -4.084153e+000, -8.358961e+000, 4.340219e+000, 6.031344e+000, 1.226317e+001, -1.153514e+000, -2.473673e+000, 3.946644e+000, -6.755233e+000, 7.222495e+000, -5.344163e+000, 6.508131e+000, -1.312503e+001, -1.456524e+001, -1.346089e+000, 8.935064e+000, 1.488712e+001, -3.342086e+000, 1.036784e+001, -4.513085e+000, -1.347767e+001, -1.663712e+000, 1.917060e+001, 4.650904e+000, -4.133857e+001, 4.040405e+000, -1.255094e+001, 6.610941e+000, 2.076267e+001, -4.122922e+000, -1.501664e+001, 2.094718e+001, 1.235097e+001, -4.020543e+000, 2.293337e+000, 2.391303e+001, 7.403062e+000, -1.498481e+001, -4.185797e+000, -7.317679e+000, -6.257281e+000, 7.202132e+000, 3.200860e+000, -1.796237e+001, -3.252227e+000, -9.976993e+000, -2.482021e+000, 4.710784e+000, -1.978347e+000, -1.406502e+001, 3.237219e+000, 3.807650e+000, 9.013936e+000, 9.398207e+000, -7.284137e+000, 1.277140e+001, -2.138587e+000, 1.378345e-002, -6.844249e+000, 1.733872e+000, -2.162781e+000, -1.371790e+000, -2.941483e+000, -9.217532e-001, -3.188099e+000, 4.995235e+000, -6.844141e+000, -1.961236e+000, -6.118655e-001},
{4.466258e-001, -1.038678e+000, -2.835077e+000, -9.995524e-001, -5.534561e+000, 9.017404e+000, 7.825561e+000, 7.261292e+000, 4.108361e+000, -5.201852e+000, 9.417533e+000, 7.250713e+000, -2.655681e+000, 2.361496e+000, 9.904487e+000, -3.704659e+000, -1.864771e+000, 1.117078e+001, 1.292371e+001, -8.292809e+000, 2.886365e+000, -9.843548e+000, -2.383727e+000, -3.632988e+000, 1.036016e+000, 1.334291e+001, -1.122917e+001, 7.232386e+000, 6.007704e+000, -6.225717e+000, 8.315290e+000, -6.683214e+000, -1.456648e+001, -1.403880e+001, -1.930839e+001, -7.274932e+000,

© ISO/IEC 2004 — All rights reserved


Copyright International Organization for Standardization
Provided by IHS under license with ISO
No reproduction or networking permitted without license from IHS
Not for Resale

7.564223e+000, -1.891106e+001, -9.363548e+000, -1.699987e+001, -1.591096e+000, 7.727464e-001, -8.769331e-001, -6.340879e+000, 2.148462e+000, 9.286689e+000, 2.710812e+000, -4.326650e+000, -3.916135e+000, -1.371167e+001, 2.430851e+000, 4.747858e+000, -1.870830e+000, 1.467219e+000, 1.485415e+000, -1.623420e+000, -3.981557e+000, 4.954702e+000, 3.023560e+000, -2.712271e+000, -3.317016e+000, -6.399064e+000, 4.316096e+000, 1.074305e-001, -1.515946e+000, 1.759906e+000, 3.304041e+000, 4.387047e+000, -1.537055e+000, 2.039815e+000, -9.161746e-001, 1.124194e-001, 2.952319e+000, 2.742126e+000, 3.528604e+000, -7.065251e+000, 5.904671e+000, 4.270438e+000, -5.210068e+000, 4.165217e+000, 3.110304e+000, 5.901093e+000, 1.632353e+000, 7.151342e+000, -5.489946e+000, 1.498268e-001, 1.700702e+000, -1.593761e+001, 7.365116e+000, 7.017485e+000, 1.436509e+000, -1.169363e+000, 8.053656e+000, 9.543647e+000, -3.105200e+000, 7.417680e+000, -4.970414e+000, 1.097017e+000, -1.140488e+001, -3.927545e+000, 3.255371e-001, 5.988532e+000, 1.723802e+001, 1.142673e+001, 3.368220e+000, 5.475369e+000, -5.993037e+000, -6.066741e-001, 7.312419e+000, 2.444992e+001, -6.958480e+000, -6.535095e+000, 9.677710e+000, 1.954195e+001, -1.463808e+001, -5.846671e+000, -1.080060e+001, -2.435550e+001, 1.297335e+001, -8.676062e+000, 9.123897e+000, 8.066927e+000, 3.210080e+001, -1.437451e+001, 1.505948e+001, -5.500314e+000, 9.615005e+000, -1.043075e+001, -1.541020e+001, -1.516663e+001, -1.511458e+001, -3.093024e+000, -9.596000e+000, 8.479831e+000, 4.093425e+000, 5.138694e+000, -1.138605e+001, 6.271324e+000, -9.976238e+000, 1.658866e+000, -1.089157e+001, 9.074506e+000, -5.015683e+000, -2.591649e+000, 5.890560e+000, 2.374133e+000, 7.327823e+000, -5.645763e-001, 6.259629e+000, 5.688275e+000},

{2.342983e+000, -9.164347e-002, -2.681225e+000, -5.193350e+000, -4.227475e+000, 2.005496e+000, -3.661362e+000, -1.379959e+000, -5.121562e+000, -6.727035e+000, -2.358822e-001, 1.919093e+000, -4.917510e+000, -3.953322e+000, 3.701388e+000, -1.098100e-001, 2.066403e+000, -5.132205e+000, -1.415107e+000, 1.327392e+001, -1.151035e+001, 2.039846e+000, -1.846160e+001, 3.062630e+000, 4.276322e+000, -1.809602e+000, 4.841284e+000, 6.610976e+000, 1.214359e+001, -1.785609e+001, 8.711992e+000, 8.427266e+000, 6.885446e+000, -1.516127e+000, 9.437457e+000, 1.326787e+000, -2.489603e-001, 1.567384e+001, 1.750757e+001, -1.093121e+001, 4.580696e+000, 2.775378e-001, 1.004524e+001, -4.875914e+000, -2.452037e+000, 5.402635e+000, 6.695938e+000, -7.431411e-001, -1.625141e+000, 5.543266e+000, 1.771518e+000, -5.185780e+000, -5.237729e+000, 3.939804e-001, -1.690238e+000, -4.440005e+000, -6.222082e+000, 2.586667e+000, -2.477961e+000, -2.417730e+000, -9.715261e+000, -1.452735e+000, -2.052356e+000, -3.617330e+000, -4.505127e+000, 7.126446e+000, 1.880426e+000, 5.619257e+000, 1.011636e+000, -4.814644e+000, -2.229916e+000, 5.139516e-001, 1.882364e+000, 2.871376e+000, -2.877476e+000, -6.744497e+000, 1.221270e+000, 1.721826e+000, 2.489062e+000, -6.582536e+000, -4.404241e+000, -6.522837e+000, -9.367392e-001, -6.739880e+000, -1.051169e+001, 2.578095e+000, 4.537596e+000, -5.674134e+000, 1.314715e+001, 1.012839e+001, -6.110387e+000, 6.116029e+000, -4.536451e+000, -1.602193e+000, -2.403592e+000, -1.045798e+000, 1.653326e+000, 6.876482e+000, -1.459902e+000, 2.072678e+001, -1.345658e+000, 1.416619e+001, -1.220328e+001, -6.597400e+000, 8.030660e-001, -3.236704e+000, 2.496705e+001, -3.301933e+000, 2.268646e+001, -1.512331e+001, -1.977658e+000, 1.490295e+001, 1.161582e+000, 2.766478e+001, 4.903325e+000, 6.624356e+000, -9.686829e+000, -1.884103e+001, -1.488732e+001, 1.240460e+001, 7.754916e+000, -1.063537e+001, 6.593572e+000, 1.178640e+001, 3.253547e+000, 1.294845e+001, -1.028188e+001, -7.739210e+000, 1.103410e+001, 1.686955e-001, -4.513481e+000, -3.474289e+000, 3.251076e-001, -8.474735e+000, 9.881743e+000, 9.051294e+000, -2.590307e+000, 8.746015e+000, -1.188178e+001, -1.351498e+001, 8.817726e+000, -1.018451e+001, -7.280547e-001, -7.804114e+000, 3.688625e+000, 8.324222e+000, 4.786129e+000, 6.476231e+000, -3.087534e-001, 5.215001e+000},

{-9.274214e+000, -1.010082e+001, -3.542018e+000, 4.451355e-001, -4.949968e-001, -8.841892e-001, -1.105280e+001, -1.810967e+001, -5.250692e-001, 1.690085e+000, -2.286986e-001, 4.062930e-001, 6.306098e+000, -5.024722e+000, 3.128519e+000, 4.004434e+000, 1.863236e+001, 2.113129e+000, 5.537764e+000, -9.954946e+000, -1.193625e+000, -5.854108e+000, -9.281367e+000, 1.773085e+000, 3.933578e+000, -1.610905e+000, 3.990672e+000, 5.967935e+000, 6.677820e+000, 5.691652e+000, 1.509016e+001, 1.238366e+001, 4.463755e+000, 3.279855e+000, -7.083233e+000, -4.270775e+000, 7.112190e+000, -3.648663e+000, -5.555650e+000, -1.301569e+000, -1.788535e+000, -2.584986e+000, 3.202004e+000, 7.788190e+000, 3.279546e+000, -2.065456e+000, -1.006527e+001, 5.109496e+000, -5.443795e+000, -8.765474e+000, -2.047998e+000, 5.696147e+000, 9.205552e-001, -9.985395e+000, 8.723262e+000, 3.981789e+000, -3.391967e+000, -1.142134e+000, -5.665258e+000, -1.692329e+000, 3.207205e-001, -7.878279e-001, 1.650966e+000, -5.239201e+000, -3.806278e+000, 3.861128e+000, -4.022896e+000, 1.821169e+000, 8.672386e+000, -6.005728e+000, 9.722905e+000, -1.378459e+001, 3.147332e+000, 5.392579e+000, -4.026458e+000, -1.492232e+000, -8.979761e+000, -5.814475e+000, 6.628368e+000, -3.372581e+000,


© ISO/IEC 2004 — All rights reserved

Copyright International Organization for Standardization
Provided by IHS under license with ISO
No reproduction or networking permitted without license from IHS
Not for Resale

6.017222e+000, 3.888895e+000, -4.577085e-001, -3.586049e+000, -1.732095e+000, 4.871854e+000, -5.299544e+000, 1.648507e+000, -6.450747e+000, -3.311349e+000, 9.542769e+000, -9.453449e+000, 7.877199e+000, -2.175969e+000, -8.512787e+000, 5.775951e+000, 5.529847e-001, -6.388576e+000, 1.533308e+001, -9.198684e+000, 6.169563e-001, -2.182693e+000, -1.721009e+001, -9.739099e+000, -7.477431e+000, 5.698699e+000, -7.384300e+000, -2.465289e+001, 2.537748e+001, 1.977281e-001, -1.864654e+001, -1.951211e+001, -9.253920e+000, -7.652754e-001, 1.813573e+001, 2.533578e+001, 1.598505e+001, 1.349264e+001, 1.644120e+001, -9.628831e+000, 1.059045e+001, -4.869466e+000, 7.775338e+000, -1.940941e+001, 4.199127e+000, 1.858760e+001, 1.828734e+001, -3.007376e+000, 1.511397e+001, -1.174670e+001, -4.935862e+000, -2.487662e+000, -3.365622e+000, 8.674259e+000, -4.370040e+000, -3.041053e+000, -7.961894e+000, 6.720467e-001, 1.089384e+001, 1.518181e+000, -1.059412e+001, -1.443802e+001, -9.298889e+000, 2.415555e+000, -1.282387e-001, -1.357113e+000, 4.852963e+000, 1.183595e+001, 6.205584e+000, 7.429120e+000},
{-5.072527e+000, -4.379278e+000, -4.750286e+000, 5.971700e-001, -3.328004e+000, 4.696525e+000, 1.060523e+000, -1.111917e+000, 9.234664e+000, -5.364299e+000, -3.038328e+000, 4.198796e+000, -1.285346e+001, 1.638294e+001, 3.556188e+000, 5.894493e+000, 7.563002e+000, 5.200332e-001, 2.842594e+000, -1.271277e+001, -1.922239e+001, -3.823012e-001, -6.336771e-001, -5.053608e+000, 1.687875e+000, 2.223502e+001, 5.160387e+000, -4.695255e+000, 8.263146e+000, 1.418385e+001, 1.267714e+001, 3.182573e+000, -1.350667e+000, 8.854266e-001, 1.755716e+001, -1.062885e+001, -4.049196e+000, -7.092741e+000, 6.700711e+000, 2.358036e+000, -4.799224e+000, 2.266021e+000, 1.571923e+000, -1.724892e+000, -3.721621e+000, 8.275752e+000, -3.947675e+000, 4.780444e+000, 5.963649e+000, 2.013527e+000, -9.058436e+000, -6.466210e+000, 7.764443e-001, 2.129758e+000, 6.432184e+000, 9.709947e+000, 4.762567e+000, -6.330155e+000, 5.407831e+000, -2.565936e+000, 1.081062e+000, -4.340356e+000, -5.921881e+000, -1.420487e+000, 3.702478e+000, 3.664429e+000, -1.062062e+000, 1.847688e+000, -5.776896e+000, -1.069200e+000, 5.747884e+000, -5.740515e+000, 4.559905e+000, -9.899567e-001, 3.983674e+000, -7.293397e+000, 5.752022e+000, -4.437419e+000, 3.317522e+000, -1.074613e+001, 9.889447e-001, 4.208723e+000, 2.067031e+000, -1.396927e+000, 5.025190e+000, -6.781466e-001, -1.119331e+001, 4.526516e+000, -1.238051e+001, -4.846551e+000, -6.479019e+000, -3.177399e+000, -6.603911e+000, -2.516444e+000, -1.926958e-002, -1.307257e+000, 2.092031e+001, 8.243362e+000, 9.296078e+000, -7.279724e+000, -2.685163e+000, -1.748559e-001, 1.087093e+001, -4.987910e+000, 2.013141e+001, 1.533373e+001, 1.212840e+001, 3.097896e+001, 4.122326e-001, 1.046336e+001, -6.994198e+000, 8.584057e-001, 5.374697e-001, 2.261402e+001, 1.292095e+001, -7.239380e+000, 1.493706e+001, 1.604829e+001, -8.028206e+000, -1.669789e+000, -7.073766e+000, -6.584683e+000, 4.687442e+000, 9.303244e+000, 6.696171e+000, 2.478718e+001, 3.373679e+000, 1.342879e-001, -7.833617e+000, -6.310023e+000, 3.669691e+000, -3.566870e+000, -3.643317e+000, -1.176128e+001, 2.235258e+000, -1.099017e+001, 9.432962e-002, -2.506031e+000, 9.435752e+000, 1.236249e+001, -5.788082e+000, 5.743829e+000, -7.295710e+000, -1.831277e+000, -1.233308e+001, 6.871900e+000, -2.689703e+000, 2.267684e+000, -7.426259e+000, -4.833814e+000},
{-1.188112e+000, -5.108581e+000, 1.454737e+000, -2.566222e+000, -3.354062e+000, -2.878759e+000, 2.184098e+000, 3.506102e+000, -1.047552e+000, -5.926376e-001, 4.692388e+000, -2.322458e+000, -3.056746e+000, 1.016715e+000, 2.465583e-002, 7.354077e-001, 6.343092e+000, 4.473823e+000, 4.043882e+000, -4.212696e+000, -2.297776e+000, 1.163903e-001, -3.759627e+000, -1.294763e+001, -5.368808e+000, -1.378650e+001, -1.284341e+000, -1.107335e+001, -1.787243e+001, 2.348512e+001, 2.105053e+001, 1.067403e+001, -1.496241e-001, -1.190865e+001, 4.609480e+000, 9.220980e+000, 7.570024e+000, -3.782105e+000, 2.397535e-001, -8.116703e+000, -1.245589e+001, -6.510891e+000, 6.166204e+000, 6.335647e+000, -1.751372e+000, 2.690370e+000, 8.202832e+000, -1.898594e+000, 5.140849e-001, -9.691264e-001, 1.118047e+001, -1.599788e+000, 5.269313e+000, -1.216018e+001, 1.042531e+001, 4.058856e-001, -1.729217e-001, -2.805328e-001, 1.434081e+000, -5.692681e-001, 4.361418e+000, 1.417267e+000, 6.619128e-001, 5.136503e+000, -6.547001e-001, 1.234631e+000, 7.360479e-001, -3.857756e+000, 4.745334e+000, -1.439887e+000, 2.190979e-001, -5.853101e+000, 1.172299e+000, 3.256028e+000, -2.589767e+000, 5.887635e-002, 3.601032e+000, -2.259774e+000, -3.465445e+000, 7.203840e-001, -5.012164e+000, -5.878603e+000, 4.069910e+000, 5.408674e+000, -4.054855e+000, 8.189473e+000, 7.382596e+000, -7.460627e+000, 4.101390e+000, -2.996019e-001, -5.708836e+000, -4.084479e+000, -2.275331e+000, -1.878546e+000, 2.028978e-001, -1.543851e+000, 9.333457e+000, -1.331267e+001, -4.724816e+000, 1.542559e+001, -1.091611e+000, -6.099614e+000, 2.003383e+000, 2.668497e+000, -1.367251e+001, 6.493674e+000, 1.341122e+001, 9.178870e-001, -2.312934e+001, -1.551264e+001, 5.297241e+000, -3.016668e+000, -2.798762e+001, -9.658023e-001, -1.682976e+001, -4.918226e+000, 1.329200e+001, -6.004949e+000, 2.455175e+001, 1.257142e+001, 1.277091e+001, -2.875476e+000, 6.005702e+000, 2.567322e+001, -1.926570e+000, 1.276424e+001, -

© ISO/IEC 2004 — All rights reserved


Copyright International Organization for Standardization
Provided by IHS under license with ISO
No reproduction or networking permitted without license from IHS
Not for Resale

7.460982e+000, -3.752906e+000, 1.062110e+001, 2.928574e+000, -1.327952e+001, 1.377200e+001, 6.646707e+000, -5.592225e-001,
-7.678755e-001, -4.001997e+000, -1.339043e+000, -1.290445e+001, 2.772984e+000, 6.664283e+000, -9.557453e+000, -
5.981868e+000, -2.338415e+000, -3.736249e+000, 5.024220e+000, 8.297795e+000, 5.269515e+000, 8.872451e+000, -1.999725e-001,
4.712980e+000},
{-4.039855e+000, 7.201438e+000, 2.872860e+000, -1.733846e+000, -5.663780e+000, -3.465282e+000, 3.534088e+000,
4.719772e+000, -2.462120e+000, 3.584224e+000, 3.396394e+000, -1.666328e+000, -3.984490e+000, -8.426202e+000,
3.650618e+000, 6.910102e-001, 8.574005e-001, 5.528760e+000, 2.242049e-002, -6.223490e-001, 2.189172e+001, 5.483533e+000,
4.685309e+000, -4.047959e+000, -9.346669e+000, 1.615523e+001, 5.534255e-001, 4.600526e+000, 4.682706e+000, -8.873704e+000,
1.506140e+001, 9.357166e+000, -3.371340e+000, 9.769303e+000, -5.198259e+000, 4.697822e+000, 5.386571e+000, -
3.445326e+000, 4.745820e+000, 2.653376e+000, 1.176493e+001, -6.381788e+000, -3.936748e+000, -2.104302e+001,
1.207974e+000, 4.662403e+000, 2.011745e+000, -7.844823e+000, 1.239189e+001, 1.450590e+000, -2.414860e+000, -
7.131508e+000, -1.926224e-001, -4.347328e+000, 3.317584e+000, -3.751481e-001, 3.707537e+000, -1.682854e+000, -
6.033187e+000, -6.066322e+000, 1.723130e+000, -3.617664e-001, -3.928543e+000, 1.179826e+000, -3.630672e+000,
3.181654e+000, 3.072164e+000, 4.431424e+000, 8.837806e+000, 3.348944e+000, 5.416204e+000, 7.440554e+000, -1.555445e+000,
4.601981e+000, 4.534649e-001, -2.495379e+000, 3.362612e+000, 1.001872e+000, -6.841535e+000, -1.822803e+000, -
7.443036e+000, 7.757727e-002, -5.689311e-001, 7.835917e+000, 3.242414e+000, -1.658031e+000, -1.250765e+001, -1.186563e+000,
3.604380e+000, -2.122655e+001, -5.218338e+000, 1.351004e+000, 2.034209e+000, -3.004411e+000, 1.512879e+001,
6.150779e+000, -2.328549e+000, -4.779607e+000, 4.543182e+000, 1.827992e+001, -1.302328e+001, -3.436786e+000,
6.563007e+000, -6.893349e-001, 5.306705e+000, -6.206215e+000, -1.129822e+001, -2.022700e+001, -1.808430e+001,
6.832527e+000, -2.142245e+001, 1.500875e+001, -2.671955e+001, -1.336213e+001, 3.159516e+001, 7.155314e+000,
3.287466e+000, -1.002694e+001, -2.401429e+001, 2.864373e+000, 7.686357e+000, 3.965566e+000, 7.475045e+000, 2.612492e+001,
2.512444e+001, -2.459080e+000, 7.898157e+000, -3.551805e+000, -4.624000e+000, -4.342193e+000, -3.815879e+000, -
2.412573e+000, 2.124474e+000, -3.938818e+000, -1.739687e+001, 4.565963e+000, 2.154226e+001, 4.886798e+000, 3.039794e+000,
-3.077994e+000, -2.526340e-001, 1.825974e+000, -3.102798e+000, -2.588089e+000, -4.405235e+000, 2.986550e+000,
1.017162e+001, 1.060186e+000, 2.737799e+000, -5.788480e-001},
{9.821492e-001, 2.320645e+000, 1.113307e+000, 4.416234e+000, 6.061225e+000, 4.116637e+000, 4.752344e+000, -2.153291e+000,
7.774312e-001, 9.247743e+000, -6.473763e+000, -4.130832e-001, 2.371521e+000, 5.196812e+000, -4.584143e+000, -1.571613e+000,
-1.411646e+001, 7.019534e+000, -2.033209e+001, -9.146409e+000, -7.166609e+000, 3.432433e+000, -5.036711e-003, -
1.406739e+001, 4.527461e+000, 1.090560e+001, -5.639695e+000, 9.132656e+000, -3.014597e+000, 1.012398e+000, 2.323630e+000,
9.450583e-001, 4.812841e+000, -3.462760e+000, 3.144239e-001, -7.565253e+000, 1.449045e+001, 1.237900e+001, 9.788906e+000, -
4.659612e+000, -8.644509e-002, -1.721795e+001, -1.105037e+001, 3.573451e+000, 6.377759e+000, 7.212015e+000, -
1.114717e+001, 9.686946e-001, 2.624369e+000, -6.109454e-001, 6.833557e+000, -7.225848e-001, 4.012292e+000, 5.758514e+000,
2.529843e+000, 1.430979e+000, 4.151486e-001, 7.449569e-001, -1.707656e-001, 1.178930e-001, 3.012744e+000, 5.404980e+000,
1.188828e+000, -1.069584e+001, -2.433272e+000, 7.590044e+000, -1.000111e+000, 2.814059e+000, -4.211695e+000, -5.264564e-
001, -6.995578e-001, 3.667209e+000, -2.623497e+000, -6.782252e+000, 3.422054e+000, 5.978602e+000, -3.442714e+000,
3.554397e+000, 3.875442e+000, 4.488139e+000, -7.279502e-001, 8.819686e+000, 3.157487e+000, 6.030566e+000, 7.570195e+000,
8.142163e-001, -5.648757e+000, 5.542084e+000, 1.307133e+001, -3.981910e+000, 1.489570e+001, 1.949313e-001, -1.056198e+001,
-3.324493e-001, -1.065390e+001, -1.035726e+001, -1.047887e+001, -1.813209e+001, -4.005501e+000, -7.381761e-001,
6.973028e+000, 1.615976e+001, 1.206136e+001, -1.421976e+001, 2.011314e-001, -2.565474e+001, 1.701607e+001, -4.469012e+000,
-1.998030e+001, -1.795220e+000, -1.449227e+001, -2.200187e+001, 1.267497e+001, 1.241678e+000, 7.220130e+000, -
2.038240e+001, -7.860992e+000, 2.222575e+001, -9.585059e+000, 6.048536e+000, 1.274607e+001, 4.110817e+000, 2.211060e+001,
-1.346174e+001, 5.315953e+000, 5.689816e+000, 1.111405e+001, -6.461758e+000, 3.884577e+000, 7.428058e+000, -
7.258231e+000, -1.472360e+001, 7.519773e-001, -5.552797e-001, 1.567979e+001, -1.404437e+001, -2.554399e+000, -
3.348154e+000, -2.936894e+000, -4.543462e+000, -6.184953e+000, -4.474841e+000, -1.366302e-001, -7.327483e+000, -
1.004238e+000, 9.390322e+000, -3.551488e+000, 1.205149e+001, 1.151550e+000, 4.614048e+000},
{6.694265e-001, 4.165964e+000, -2.899437e+000, 6.510642e+000, 3.202034e+000, -5.347838e+000, -8.747804e+000,
1.150846e+000, 7.157653e+000, -5.037512e-001, 8.137973e-001, -1.060039e+001, 4.759118e+000, -3.008923e+000, -7.374701e+000,
-1.313083e+000, 7.815483e+000, -3.881256e-001, 6.566252e-001, 2.014626e-001, 9.684967e+000, -3.246296e+000, 4.011000e+000, -


© ISO/IEC 2004 — All rights reserved

Copyright International Organization for Standardization
Provided by IHS under license with ISO
No reproduction or networking permitted without license from IHS
Not for Resale

5.766201e+000, 8.547197e-001, 4.845837e+000, -4.421562e+000, -1.405433e+000, -8.031684e+000, -1.167894e+000,
1.558175e+001, 4.480318e+000, 7.710759e+000, -9.477917e-001, -6.274482e+000, -1.626502e+001, 2.447336e+000, -
3.660976e+000, 1.492194e+001, -1.355694e+000, 3.241893e-001, 1.386568e+001, -1.130329e+001, 4.375325e+000, 7.458541e+000,
1.097766e+001, 3.385771e+000, 6.312501e+000, -1.866733e+000, 8.809553e+000, 2.364257e+000, 5.289801e-001, -1.516032e+000,
4.044102e+000, -3.109335e+000, 3.494366e-001, -8.565854e-001, -4.070552e+000, 1.780865e+000, -6.393314e+000, -5.784503e-001,
-1.175356e+000, -6.522366e+000, 6.732583e+000, -5.640240e+000, -5.384195e-001, -8.061523e+000, -3.336903e-001, 7.810020e-
001, -3.850602e+000, 1.399762e-001, 4.662479e+000, 3.311158e-001, -4.930057e+000, 1.607644e+000, 9.307453e+000, -
7.472842e+000, -3.763166e+000, -9.918635e+000, -3.912329e+000, 1.178564e+001, 6.325123e-001, -2.015135e+000, -
3.767269e+000, -4.326161e-001, 5.995471e+000, -6.227331e+000, 9.452610e+000, -6.114525e+000, 6.159194e+000, -
3.757144e+000, -3.571176e-001, 1.377113e+001, -5.593118e-001, -5.366862e-001, 3.823299e+000, -2.308720e+000, -4.108475e+000,
-1.442562e+001, 9.428040e+000, 1.282408e+001, -1.699815e+001, 2.197577e+000, 1.685612e+001, 9.496281e+000, -
2.141083e+001, -2.063228e+000, 1.194508e+001, 2.799162e+001, -2.195905e+001, 6.599879e+000, -1.144556e+001, -
1.963277e+001, 6.229041e+000, 1.079643e+001, -2.436589e+001, 8.361376e+000, 4.421603e+000, 7.890800e+000, 1.199424e+001,
1.787334e+001, -1.265940e+001, 4.253169e+000, -4.659210e+000, -9.839262e+000, -2.661785e+001, 1.428685e+001, -
7.814097e+000, -1.445883e+001, -6.761964e+000, 2.085861e+001, 3.407219e+000, -1.988091e+000, -1.596891e+001, -
1.994025e+000, -2.667638e+000, 7.369279e+000, 2.520586e+000, 7.331080e-001, -3.269683e-001, -7.055716e+000, 5.103749e+000,
3.499805e+000, -7.217175e+000, 4.120003e+000, 9.820940e-001, -8.011037e+000, 7.842638e-001, 1.236468e+000, -2.263034e+000},
{-8.057186e+000, -1.543633e+000, 5.825068e+000, -2.837777e+000, 1.126130e+000, -6.405669e+000, 2.214142e+000, -
2.129505e+000, -8.941604e+000, -1.613165e-001, -1.118922e-001, -8.706092e+000, -3.875165e-001, 5.592705e+000, 1.547298e+001,
5.843993e+000, 3.309896e+000, 7.377706e+000, 3.545037e+000, -3.454965e+000, 3.478436e+000, -7.338234e+000, -
4.422291e+000, -6.139161e+000, -6.106398e+000, -2.223665e+000, 1.554044e+001, 8.615664e+000, 7.125775e+000,
1.467140e+000, -4.215964e+000, 4.752218e+000, 7.435230e+000, 1.319771e+001, -6.053628e+000, 6.451749e+000, -6.023086e-002,
-1.265310e+001, -1.354056e+000, 8.698476e+000, -5.822021e+000, -6.674845e-002, 1.796403e+000, 3.312751e+000,
7.079611e+000, -4.823953e-001, -2.361439e+000, -5.894097e+000, -6.326914e-002, 1.720957e+000, -8.454234e-001, 4.353209e+000,
-8.504559e+000, 8.578813e+000, -3.423538e+000, -7.786045e+000, 6.436866e+000, 4.686359e+000, -6.329202e+000, -
1.588736e+000, -1.153091e+001, 2.781014e+000, -3.294648e+000, 1.023473e+001, -8.250750e+000, -3.823470e+000,
1.369892e+000, 2.764781e+000, -6.607521e+000, 1.132065e+001, 8.940594e+000, -4.008927e+000, -3.125555e+000,
3.539152e+000, -3.717265e+000, 1.963036e+000, 1.116613e+000, -1.309654e+000, 5.023472e+000, 3.207202e+000, -
8.665881e+000, 1.343977e+000, 6.775979e+000, 6.213341e-001, -3.394528e+000, -6.407782e+000, -2.240521e+000, -
1.395443e+001, 1.921677e+000, 1.152280e+001, -4.218258e+000, 7.717094e+000, 5.731496e+000, -1.535959e+001, 3.908808e+000,
-1.757758e+000, 3.041118e+000, -5.140827e+000, -3.260516e+000, 2.390573e+001, 2.966239e+000, 1.362402e+001,
5.840554e+000, 1.250623e+001, 5.040665e+000, 1.132964e+001, 6.808796e+000, -2.645463e+001, -1.417644e+001, -
1.411032e+001, 3.216054e+000, -2.229600e+001, -5.198908e+000, 1.533384e+000, -1.779860e+001, 2.340337e+000,
8.945513e+000, 1.898370e+001, -8.139882e+000, 2.395293e+001, -2.405490e+001, -2.034510e+001, -2.158904e+000, -
1.263157e+001, -2.919979e+000, -1.058884e+001, -8.413738e+000, 1.138258e+001, 2.125742e+000, -2.041058e+001,
1.043623e+001, -1.842512e+001, -1.162508e+001, -5.243285e+000, 8.273023e+000, -5.107529e-001, -1.214202e+000,
1.210055e+001, -3.963220e+000, 1.559539e+001, 9.417128e+000, -5.578808e+000, -1.368547e+000, -3.233588e+000, -
6.720445e+000, -2.434380e+000, 1.034574e+001, -1.858856e+001, 5.460430e+000, -3.001732e+000},
{-6.701057e+000, -6.395485e+000, 4.977769e+000, 5.591687e+000, 1.006366e+000, -9.138912e+000, -4.732218e+000,
4.684212e+000, -3.961386e+000, -2.710583e+000, 6.811334e+000, 1.044605e+000, -2.074723e+000, 2.794967e+000,
1.664928e+000, -2.750833e+000, -9.058815e+000, -5.982873e+000, 4.771334e+000, 5.169712e+000, 1.929929e+001, -
6.773067e+000, 2.647879e+000, 2.182170e+001, -3.445629e+000, 3.996871e+000, 1.842650e+001, -1.289127e+001, -
1.115653e+001, -1.228953e+001, 9.601892e+000, 1.029655e+000, 9.207082e+000, -3.062394e+000, -1.189023e+001,
1.053324e+001, 4.976018e+000, -1.936542e+000, 9.316114e+000, 1.805526e+000, -5.503355e-001, 3.041480e+000, 6.066410e+000,
8.059396e+000, 2.143504e+000, 1.120969e+001, -1.940815e+000, 7.122005e+000, -9.286602e+000, -7.394011e+000, 7.639970e-001,
-5.522670e+000, -5.013719e-003, 2.451411e+000, 4.860975e+000, 8.134020e-001, -3.462975e+000, 1.989509e-001, -2.468599e-001,
7.253319e+000, 2.896284e-001, 9.106370e-001, -3.681041e+000, -3.595576e+000, 5.111877e+000, -2.222306e+000, -1.934263e+000,
4.569754e-001, -1.272823e+000, -9.231313e-001, 7.231080e+000, -1.099189e+001, -2.429901e+000, 2.160196e+000, 1.865045e+000,

© ISO/IEC 2004 — All rights reserved


Copyright International Organization for Standardization
Provided by IHS under license with ISO
No reproduction or networking permitted without license from IHS
Not for Resale

9.632356e+000, 4.563647e+000, 1.715577e+000, -1.746947e+000, -9.654116e-001, 4.466844e+000, -5.834084e+000, -6.717983e+000, -4.699521e+000, 3.637117e+000, 2.553816e+000, -2.218737e-002, -4.061952e+000, 6.056656e+000, -1.334675e+001, -2.339152e+000, 5.418888e+000, 1.985252e+000, 4.281661e+000, -8.550542e+000, -7.530686e-002, 1.835673e+001, 1.700765e+001, 1.345816e+000, 3.635262e+000, -2.493704e+001, 8.919187e+000, 3.630111e+000, 1.118372e+001, 1.488311e+001, -3.539594e-001, 1.176304e+001, 8.719503e+000, -1.463009e+001, -2.354309e+000, -1.046292e+000, 1.654686e-001, 8.820010e-001, -5.308293e+000, -1.466537e-001, -2.736287e+001, -7.769042e+000, -8.936438e+000, 8.645454e+000, -3.868662e+000, -3.923288e+000, -7.798508e+000, -1.434119e+000, -3.436324e+001, -4.001940e+000, 1.778805e+001, 9.934909e+000, 4.904374e+000, 1.349734e+001, 7.743723e+000, 3.766090e+000, -1.428887e+001, 5.079064e+000, 2.349411e+001, -1.584705e+001, -5.320916e+000, -3.690582e+000, 6.887952e+000, 4.773633e+000, 6.927686e+000, 8.727624e+000, -8.930845e+000, 1.739989e+001, -8.879908e+000, -4.950651e+000, 1.296432e+000, 8.063859e+000, 9.697195e+000, 1.284775e+001, -1.701598e-001},

{-2.479637e+000, -9.877364e+000, -7.298923e+000, -9.729372e-001, -9.606711e+000, 1.176679e+000, -2.765220e+000, 3.830362e-001, -5.419554e-001, -2.159581e+000, 2.145125e+000, 8.940442e+000, 3.015822e+000, -1.561721e+000, 8.427672e+000, 3.490366e+000, 6.134740e+000, -5.739285e+000, -7.705672e+000, -3.756968e+000, 1.302855e+001, -4.727493e+000, 7.739822e+000, -6.792625e+000, 4.086754e+000, 1.068155e+001, 4.862550e+000, -2.168685e+000, -2.617941e+001, 2.386134e+000, -5.346807e-001, 2.567505e+000, -4.752810e+000, 3.330203e+000, 2.955491e+000, -4.868877e+000, 1.671473e+000, 8.627724e+000, 1.552848e+001, 1.233635e+001, -9.453712e+000, -1.914455e+000, -1.398115e+000, 1.182060e+001, 4.169540e+000, 4.967984e+000, 4.516710e-001, -9.723778e+000, 9.686160e+000, 1.029606e+001, 3.279676e+000, 4.232179e+000, -2.759891e+000, 4.018724e+000, -1.435109e-001, 5.979058e+000, -1.587352e+001, 7.357840e+000, 3.210623e+000, 1.937716e+000, 4.946141e+000, -8.240534e-001, -7.196648e+000, -5.062348e+000, -2.003553e+000, -1.843096e+000, 3.026356e+000, 3.073856e+000, -2.863632e-001, 7.905291e+000, 6.724058e-001, -1.109997e+001, 6.620010e+000, 6.165113e+000, -8.948532e-002, -4.151856e+000, 7.576319e+000, 2.425215e+000, -4.081715e+000, -3.980458e+000, -5.372514e-002, 6.479750e+000, 3.435146e-001, -3.224373e+000, -1.554169e+000, -5.403952e+000, -8.505055e+000, -3.646638e+000, -3.246796e+000, 1.067946e+001, -3.749992e+000, -1.105535e+001, 4.414404e+000, 3.190283e+000, -1.032705e+001, -4.789720e+000, -2.402064e+001, 3.709822e+000, 7.585575e+000, -3.186657e+000, 8.868113e+000, -1.791879e+000, 6.390064e+000, 8.409863e+000, -1.203657e+000, 1.651967e+001, -9.135628e+000, 7.092915e+000, 2.610760e+000, 4.413115e+000, -1.397887e+001, 1.668812e+001, -8.412201e+000, 4.487189e-001, 1.000155e+001, 1.520533e+001, -3.558813e+001, 3.818560e+000, -1.348576e+001, -3.161615e+000, -1.137789e+001, -1.577354e+000, 2.433163e+001, 1.266145e+001, -3.335145e+001, -1.252653e+001, -4.711972e+000, 1.349706e+001, 1.489376e+001, -8.074331e+000, -1.051673e+001, -2.738515e+000, 8.830842e-001, 9.801308e+000, -1.560853e+001, -1.753653e+001, -1.121886e+001, 2.032675e+000, 3.970997e+000, -8.941178e+000, -7.862990e+000, -1.261476e+001, 5.166439e+000, -6.018053e+000, 2.033088e+000, 1.145357e+001, -1.766660e+001, -3.671259e-001, -5.401146e+000, 4.862633e-001},

{-2.696431e+000, -4.759529e+000, -4.718745e+000, -1.110820e+001, 1.327503e+000, -2.039179e+000, 8.384978e+000, 7.172777e-001, -5.914455e+000, 2.552046e+000, -1.215298e+001, 8.239998e+000, -1.696628e+000, 8.558144e+000, 2.751682e+000, 2.680655e+000, -1.370071e+000, -2.725378e+000, 2.445931e+000, -1.188668e+000, 4.302676e+000, 1.014399e+001, 1.314743e+001, -1.312425e+001, 5.053366e+000, 1.401072e+001, 7.132063e+000, -1.416891e+001, 1.478689e+000, 8.492144e+000, 2.490275e+000, 7.079571e+000, -1.129061e+000, 1.018856e+001, -8.006015e+000, -3.068272e-001, 4.919132e+000, 1.147275e+001, -1.395305e+000, 1.939991e+000, -3.464322e+000, 1.986484e+000, -6.018665e+000, -5.357919e+000, -1.236822e+001, -1.000877e+001, -2.995087e+000, 1.203861e-003, 3.368417e-001, -9.553496e+000, 6.861493e+000, -1.658569e+000, -5.653301e+000, -6.710005e+000, -8.560665e+000, 4.301698e+000, -1.741958e+000, -4.165562e+000, 4.885845e+000, -1.143571e+001, 1.384015e+001, 5.027601e+000, 2.784017e+000, -3.250982e+000, -4.611352e+000, -2.031347e+000, 2.622159e+000, -6.155099e-001, 6.414397e+000, -2.555430e+000, 2.592347e+000, -4.149239e+000, 5.772418e+000, 1.027772e+000, -9.363591e+000, -5.073857e+000, 6.374672e+000, -2.735932e+000, 7.191896e+000, -2.992729e-001, -1.478860e+001, 1.131194e+000, 3.610728e+000, -6.212879e+000, 5.700697e+000, 1.827198e+000, 9.857254e+000, -9.116963e+000, -1.257468e+001, 2.350503e+001, -4.521156e+000, -9.784363e+000, -2.219806e+000, 9.815426e+000, 9.189302e+000, 1.587166e+000, 1.148810e+001, -5.630402e+000, 2.265231e+000, 7.844646e+000, 1.829542e+000, 3.819671e+000, 1.381081e+001, 1.515306e+001, -9.671267e+000, 1.040688e+000, 1.249192e+000, -1.307456e+001, 7.631003e+000, -2.546932e+001, -1.410657e+001, 1.076970e+001, 4.163343e+000, 2.384458e+001, 1.318151e+001, -5.701232e+000, -1.718321e+001, 1.392465e+001, 1.515287e+000, -


© ISO/IEC 2004 — All rights reserved

Copyright International Organization for Standardization
Provided by IHS under license with ISO
No reproduction or networking permitted without license from IHS
Not for Resale

2.136890e+001, 1.423986e+001, 5.133551e+000, -1.153012e+001, -1.286363e+001, 2.050346e+001, -7.103339e+000, -5.766838e+000, 1.712153e+001, 1.300383e+001, 5.108351e+000, 7.889270e+000, -1.403131e+000, 9.215734e+000, 1.844137e+001, 1.330435e+001, -9.665192e+000, 2.837946e+001, -1.136755e+001, 6.153200e+000, 7.221324e-001, -6.215779e+000, 7.648577e+000, -2.061041e+001, 1.241000e+001, -9.901228e+000, -1.259153e+001, -5.577094e+000, -1.410025e+000, -1.551667e+000, -7.353205e+000},
{-4.136589e+000, 6.236403e-001, 5.414279e-001, 5.749326e+000, -2.069525e+000, -1.553698e+000, 9.793317e+000, -1.740499e+000, -2.887881e+000, 7.604800e+000, 7.375637e+000, -7.419329e-001, -8.593168e-001, -2.916478e+000, -6.519292e+000, -3.546669e+000, 3.172992e+000, 2.777310e+000, 7.120438e+000, -1.261340e+001, 1.210403e+001, -5.765388e+000, 1.164204e+001, -1.238691e+001, 3.290222e-001, 8.565299e+000, 1.070930e+001, -4.881472e+000, 1.333953e+001, -1.246051e+001, -1.871254e+000, -7.359762e+000, 1.240497e+001, -1.258802e+001, 1.822958e+000, 2.490686e+000, 3.648669e-001, 4.070855e+000, -3.535307e+000, 7.156187e+000, 1.034753e+001, 9.241139e+000, -1.507223e+000, 5.682932e+000, 2.232901e+001, -7.461527e+000, -2.541102e+000, 1.042491e+000, 3.732507e+000, -6.231612e-002, 1.848343e+000, -4.087720e+000, 4.950035e+000, -2.524792e+000, -2.361191e+000, -7.054518e+000, 2.277088e+000, 2.054447e+000, 7.302382e+000, -9.790677e+000, -4.306871e+000, 1.757709e+000, -7.413343e-003, -2.087459e+000, -6.966731e+000, -1.704234e+000, 3.463438e+000, -7.086183e+000, 7.578594e-002, 3.970899e+000, 4.865367e+000, 2.760363e-001, 1.179731e+000, 8.832596e-002, 6.172473e+000, 2.535473e+000, -9.583411e-001, -3.652913e+000, 5.220532e-001, 7.889908e+000, -2.841421e+000, 6.968235e+000, 2.795341e+000, 6.256055e+000, -4.409527e+000, 6.982763e+000, 9.925906e-001, -1.478394e+000, -1.301286e+000, -6.380554e+000, 2.303509e+000, -6.708613e+000, 4.481816e-001, -2.818883e-001, -5.118888e+000, 6.706172e+000, 6.432202e+000, -3.433331e+000, 7.607101e+000, -6.792375e+000, -9.901222e+000, -4.569386e+000, 1.421403e+001, -1.291526e+001, -4.851066e-001, 2.017724e+001, 1.410539e+001, -9.739004e+000, 9.781037e+000, -1.224739e+001, -2.816134e+000, 1.419026e+001, 2.303378e+001, -3.395244e+000, -1.814104e+001, -4.815721e+000, 2.427331e+000, -4.678189e+000, -1.478185e+001, 1.736248e+001, 2.262225e+001, -6.469738e-001, -1.894054e+001, -3.098753e+000, -2.610085e+001, 1.821736e+001, 1.043544e+001, 1.442036e+001, -5.511324e+000, -7.562389e+000, -1.318744e+001, 2.330855e+000, -7.442862e+000, -1.906984e+001, -4.211731e+000, -1.402859e+001, 1.345367e+001, -2.269472e+001, -2.989251e+000, -3.820004e+000, -5.653985e-001, 3.113493e+000, -2.694795e+000, 8.778333e+000, 7.347597e+000, 3.263530e+000, 1.639438e+001, -1.245710e+001, 3.091116e+000, 2.091217e+001},
{2.665832e+000, 3.584409e+000, -1.181111e+001, 5.820377e-001, -3.812223e+000, 3.831699e+000, -1.313223e+000, -1.157101e+000, -8.677019e+000, -2.486776e-001, 1.450055e+000, 7.496119e+000, -6.547389e+000, 1.199264e+000, 8.559705e+000, -4.419354e+000, 1.117233e+000, -1.032097e+001, -3.499509e+000, -4.732242e-001, -4.947590e+000, 7.650157e+000, 7.789502e+000, -1.356712e+001, 5.603071e+000, -3.166004e+000, 2.499712e+000, 9.038793e+000, 4.784819e-001, -9.664660e+000, 2.187323e+001, -1.465631e+001, 3.849514e+000, 1.849148e+001, 1.338967e+001, -2.961877e+000, 1.278471e+001, 2.290952e+000, -9.240616e+000, 1.205858e+001, 1.888742e+000, -1.341786e+001, -1.142118e+001, 9.766912e-001, -4.471019e+000, -1.347980e+000, -3.681605e+000, 1.489739e+001, 6.138801e+000, -5.612783e+000, -3.285119e+000, -1.040437e+001, 8.884787e+000, 5.814917e+000, 8.727761e+000, -3.753103e+000, -7.807684e+000, -7.633837e+000, 5.535662e+000, -1.353750e+001, 4.464723e+000, -6.208679e-001, -4.078526e+000, -5.044561e+000, 6.103033e+000, 2.381206e-001, -2.418875e+000, 7.074483e+000, 9.208214e-001, 5.131428e-001, -2.173426e+000, 4.976043e+000, 1.029082e+001, -5.072616e-001, 3.870040e+000, -1.007368e+000, -3.211780e+000, 2.247832e+000, -2.010573e+000, -5.970858e+000, -3.177564e+000, -4.861484e+000, -5.927186e+000, -4.242363e-001, -3.568975e+000, 3.910848e+000, -8.622397e-001, 1.499695e-001, 9.726551e+000, 5.818834e+000, 6.928893e+000, -8.586234e+000, -4.968717e+000, -1.504084e+001, -1.000651e+001, -2.201308e+000, -1.172901e+001, 1.286606e+001, 5.506621e+000, 8.587656e-001, 1.058267e+001, 5.036759e+000, -4.606872e+000, 4.242228e+000, -1.034012e-001, 4.568237e-001, -8.982454e+000, -3.896098e+000, -2.705292e+000, -1.968556e+001, -2.008285e+000, 1.909763e+001, 8.795764e+000, -3.496174e+000, -1.835780e+001, -6.157276e+000, 1.252926e+001, -1.432444e+001, 3.826235e+000, -9.684492e+000, -6.769767e+000, 1.576065e+001, -1.013480e+001, 9.947760e+000, -1.129366e+001, 8.546260e+000, 2.151844e+001, -1.619483e+001, -8.053047e+000, -1.326927e+001, 2.140520e+001, -2.438987e+001, 1.126826e+001, 2.578037e+001, -3.380577e+000, -8.228686e+000, -3.178711e+000, 5.767891e+000, -1.518133e+000, -4.601156e-001, -1.894660e+001, 1.021410e+001, -5.925967e+000, -3.558119e-001, -4.043353e+000, 1.664537e+001, -1.989417e+000, 8.131295e+000, -2.583765e+000, 1.319916e+001},

© ISO/IEC 2004 — All rights reserved


Copyright International Organization for Standardization
Provided by IHS under license with ISO
No reproduction or networking permitted without license from IHS
Not for Resale

{3.587912e+000, 7.408229e-001, 4.673968e+000, 1.125656e+000, -1.345552e+000, -1.274397e+000, -8.496482e+000, -7.517406e+000, -2.493172e+000, 8.641778e+000, 1.663694e+000, -3.381753e+000, -4.035152e+000, -5.327211e+000, 4.140044e-001, -9.763958e+000, 8.332785e+000, -7.128493e-001, 3.814970e-001, -6.503010e+000, -1.091447e+001, -5.735498e+000, -6.692854e+000, -1.024601e+001, 2.204975e+000, 1.325380e+001, 6.376311e+000, -1.436833e+001, -1.004597e+000, -2.147118e+000, -1.049486e+001, -4.200051e+000, -1.886930e+001, -2.120159e+000, -5.275430e+000, 9.872188e+000, 6.621684e+000, -3.147547e+000, -5.476562e+000, 1.570009e+001, -1.614022e+000, 5.499235e+000, 5.216762e+000, 9.745365e+000, -9.294748e+000, 6.304595e+000, -8.871963e+000, 6.159735e+000, -3.000432e+000, 2.385222e+000, 9.762395e+000, 2.249394e+000, 2.175547e-001, -5.019046e+000, 9.088979e+000, 6.450753e+000, 4.295330e+000, 1.927453e+000, -1.855714e+000, -4.618591e+000, -8.480682e+000, 3.247378e+000, 1.896722e+000, 9.811697e+000, -2.515312e+000, 1.784023e+000, -4.313959e+000, -7.067283e-001, 5.102543e+000, 5.389249e+000, -4.251472e+000, 8.910493e-001, -4.183829e+000, 5.677156e+000, -2.635043e-001, 3.356176e+000, -1.072893e+001, -3.485615e+000, -1.520656e+000, -2.102357e+000, 1.796087e+000, 4.178132e+000, 2.741639e+000, -1.587409e+000, 3.422745e+000, 1.413866e+001, 9.000919e+000, 1.002050e+001, 1.469626e+000, -1.099019e+001, -7.448209e-003, -8.632772e+000, 1.509275e+000, -1.379976e+001, -2.580419e+000, 3.837884e+000, -2.101184e+001, -6.569645e+000, 7.315063e+000, -9.039269e-001, -1.726238e+000, 6.331789e+000, -1.792365e+000, -1.095344e+001, -4.021756e+000, -1.263801e+001, 6.878062e+000, 4.360665e+000, 1.315654e+001, -7.893319e+000, 1.436794e+001, 2.195235e+001, 3.513348e+000, 6.734249e+000, 1.049898e+001, 1.635495e+001, 4.463880e+000, -9.354642e+000, 9.159632e+000, 2.912195e+001, -2.717970e+000, -1.630912e+001, 1.810108e+001, -4.137048e+000, 1.598804e+001, -6.707589e+000, -8.125380e-001, 1.239975e+001, -2.483768e+001, 4.151794e+000, -6.690832e+000, 6.349370e+000, -1.225907e+000, 2.967210e+001, 8.687231e-002, -1.369797e+001, 6.033300e+000, -4.526996e+000, -5.453571e-001, 2.196042e+001, -2.390845e+000, -5.673431e-002, 4.791351e+000, -1.535123e+001, 1.503621e+001, 4.401795e+000, -8.329752e+000, -6.412228e+000, 8.880843e+000, -1.789168e+001},
{-6.982319e-003, 2.810418e+000, 3.583039e+000, -9.444142e-001, -2.030860e+000, 1.175568e+000, -2.599010e+000, -3.807821e+000, 6.243935e+000, 4.547134e+000, -1.587162e+000, -1.562663e-001, 5.165572e+000, -5.295200e+000, 4.574785e-001, -4.012840e+000, 6.105702e+000, -5.173938e+000, -2.856990e+000, 3.573822e+000, -1.494558e+001, 6.981160e+000, 1.855990e+001, -1.419948e+000, -6.671904e+000, -7.317334e+000, -8.068257e+000, 1.702895e+000, 7.726241e+000, 7.838710e+000, -9.142414e-001, 2.768836e+000, 1.390383e+001, 4.048116e-001, -4.749512e+000, 4.279761e+000, 5.933469e+000, -1.074183e+000, -1.539333e+001, -2.201924e+001, 9.319627e+000, -1.809051e+001, 9.046900e+000, -1.164655e+001, 4.613333e+000, 1.137844e+001, 1.381128e-002, 5.622391e+000, -5.247489e+000, 7.632737e+000, 5.624796e+000, 7.491980e+000, 9.588324e+000, -2.044438e+000, 2.377125e+000, -2.713734e-001, -7.870156e+000, 3.474807e+000, 1.479752e+000, 1.878791e+000, 2.665805e+000, -3.612551e+000, 1.316015e-001, -8.392589e+000, -5.568281e+000, -3.283438e+000, -3.354480e-001, -1.833134e+000, 8.104130e-001, 9.798851e-001, 1.055219e+000, 2.279045e+000, -2.234338e+000, 4.702588e+000, 2.757190e-001, -2.087038e+000, -2.244397e+000, -2.281386e+000, -1.669010e+000, 1.315305e+000, -9.241588e-001, -9.941920e-001, -2.570101e+000, -7.238749e-001, 2.419611e+000, 5.326688e+000, -2.805897e+000, 1.314572e+001, 4.691995e-001, 8.026803e+000, 5.191981e+000, 2.705864e+000, -1.425996e+000, -8.523074e+000, 8.403806e+000, -4.112641e+000, -2.519135e+000, 1.418189e+001, 6.118372e+000, -4.235836e+000, 1.791098e+000, -5.154706e+000, 1.402418e+001, 1.461305e+000, 7.204173e+000, 3.455685e+000, -1.019457e+001, 1.200927e+001, 2.837553e+000, 1.056611e+001, 1.511113e+001, 1.108688e+001, -1.655634e+000, 5.796968e+000, 5.004682e+000, 1.534206e+000, 3.528496e+000, 6.859571e+000, -1.207001e+001, 2.459490e+001, 9.837402e+000, -1.248614e+001, -2.965184e+001, -5.325100e+000, 1.122831e+000, -2.441170e+001, 1.770174e+001, 1.677321e+001, 2.612025e+001, -1.578907e+001, -1.592487e+001, 8.615476e+000, 3.321165e+001, 5.778905e+000, 8.057940e+000, 2.188284e+000, -2.224331e+001, 8.954890e+000, 1.182155e+001, 1.720965e+000, -1.186916e+000, -5.255747e+000, -9.629340e+000, -1.931345e+001, -4.531889e+000, 9.978647e+000, -4.691731e+000, 7.611453e+000, -2.661877e+000, 1.596977e+001},
{8.476952e-001, 3.238774e+000, 8.044860e+000, -3.446545e+000, -2.953366e+000, 3.413718e+000, 1.503486e+000, 9.171192e+000, 6.708879e+000, -9.701161e+000, 1.309511e+001, -1.271024e-001, -2.331743e+000, -6.738320e+000, -6.556903e+000, -2.905567e+000, 9.617226e+000, -3.898293e-001, 1.431622e+000, -5.570847e+000, -3.972088e+000, 1.761443e+001, -2.510210e+000, -6.270799e+000, 3.155606e+000, 1.107083e+000, -5.693945e+000, -4.097795e+000, 2.456922e+000, 9.269058e-001, 3.873258e+000, -1.797142e+001, 3.987717e-001, -7.214582e+000, -4.693593e+000, -4.676611e+000, 1.375353e+001, -1.155057e+001, 2.407407e+001, 4.858230e+000, -3.509386e+000, -2.508083e+000, 1.334957e+000, -4.614455e+000, -1.677939e+001, -3.291591e+001, -1.769692e+000, -7.209976e+000, -7.977422e+000, 8.011285e+000, 2.297938e+000,


© ISO/IEC 2004 — All rights reserved

Copyright International Organization for Standardization
Provided by IHS under license with ISO
No reproduction or networking permitted without license from IHS
Not for Resale

2.188751e+000, 5.139722e+000, 1.778653e+000, 3.304767e+000, -7.206917e+000, -8.069237e+000, 4.706633e+000, -2.859555e+000, 5.284449e+000, -8.018278e-001, 2.379408e+000, -5.972490e+000, -2.489248e+000, -5.005079e+000, -3.610168e+000, 3.253384e-001, -2.795421e+000, -3.060436e+000, -1.687846e+000, -6.764002e-001, 2.886637e+000, -6.443330e+000, 1.577326e+000, -1.292400e+000, -4.622018e+000, 5.959017e+000, 7.727727e+000, -6.735971e+000, -2.820947e-001, 3.136053e+000, -4.741672e+000, -4.424802e+000, 3.313659e+000, -1.995830e+000, 4.064670e+000, 3.387788e-001, -6.568667e+000, 1.965069e+000, -9.376359e+000, 8.511296e-002, -2.316102e+000, 2.241262e-001, 8.318325e-001, -1.118812e+000, 2.117961e+000, 1.725533e+001, 4.999579e+000, 6.674602e+000, -1.763138e+001, -2.214841e+001, -7.361444e+000, -1.592009e+000, 3.144855e+000, -7.189448e+000, -8.317340e+000, 1.154608e+001, 5.338498e+000, 8.401321e+000, 1.928770e+000, -1.226452e+001, -1.145521e+001, -9.780649e+000, -1.676492e+000, -1.406193e+001, 2.223471e+001, -1.714764e+001, 8.024361e+000, -1.972521e+001, 2.221469e+001, 1.031586e+001, 1.914462e+001, -9.415979e-001, -9.361799e+000, -7.092614e-001, -4.752840e+000, -2.338136e+001, 6.339057e-001, 5.550089e+000, -6.865656e+000, 2.248891e+001, -7.015220e+000, 3.328136e+000, 5.986001e+000, -4.374301e+000, 8.216667e+000, -4.802952e+000, 2.350250e+000, 3.440553e+000, 1.809517e+001, -1.131651e+001, -5.554876e+000, -1.011312e+001, -5.882954e+000, -8.475300e+000, -1.171075e+001, 1.328572e+001, -1.650738e+000, 6.111351e+000, -1.661667e+001},
{-3.527339e+000, 1.366266e+000, -2.281371e+000, -2.894273e+000, -3.197627e+000, 1.671332e+000, -5.912407e+000, 5.826678e+000, -4.469355e+000, -2.817841e+000, -3.934005e-001, -4.139157e+000, -6.502846e+000, -3.562616e+000, 5.806691e-001, 1.163865e+001, -2.712780e+000, -9.305823e+000, 9.113374e-001, 7.015770e+000, 3.835807e+000, 5.490246e+000, 8.202847e-001, 2.616970e+000, 1.114206e+001, -3.083190e+000, -1.668843e+000, 1.052040e+000, 1.172246e+001, -8.883244e+000, -8.260717e+000, 1.207726e+001, 3.681337e+000, 8.268216e+000, 1.093951e+001, -2.404197e+000, 6.816631e+000, -9.249034e+000, 1.350966e+001, 3.927840e+000, 1.461203e+001, -8.152582e+000, -2.057716e+000, 1.466581e+001, 1.213612e-001, 7.260558e+000, -3.539880e+000, 2.014568e-001, -2.037591e+000, -1.494769e+001, 6.705537e+000, -7.872728e-002, -7.942996e+000, -7.615252e+000, 3.719025e+000, -6.806064e+000, 3.055774e+000, -8.305722e-001, 1.159531e+001, 1.370708e+000, 6.536584e+000, 3.656193e+000, 1.266748e+001, 3.890620e+000, 7.837020e+000, 6.747675e+000, 8.780888e+000, 9.100157e+000, 3.099824e+000, 5.250689e+000, 3.984195e+000, 5.451185e-001, 1.818945e+000, 1.935494e+000, -1.920888e+000, -2.672626e+000, 1.299846e+000, 3.706013e+000, -3.019809e+000, -7.839435e+000, 1.113735e+000, -9.467202e+000, 4.231479e+000, -5.342726e+000, -3.827200e+000, -6.606384e+000, -4.892176e+000, -9.394460e-001, -1.169897e+001, 4.876227e+000, -1.111578e+000, -3.490045e+000, 2.994285e-001, -8.556613e+000, 1.761828e+000, 8.473112e+000, 8.267029e-001, -2.529973e+000, -6.840688e+000, -8.554359e+000, 6.227452e+000, -6.251681e+000, 8.086209e+000, -1.966447e-001, -2.338691e+001, 1.256766e+001, 1.028328e+001, -6.761666e-001, 7.460376e+000, 4.713368e+000, 4.700678e+000, 1.692827e+001, -1.677834e+001, 6.532561e+000, -1.488671e+001, -3.865143e+000, 1.488455e+001, 1.346811e+001, 1.027412e+001, 1.628299e+001, -6.074972e+000, 1.785776e+001, 9.866536e+000, -2.828510e+001, 6.132685e+000, -4.634074e+000, -3.113513e+000, -5.394829e+000, 1.208704e+000, 1.150353e+001, -3.120993e+001, -9.859740e+000, 1.548321e+000, -8.102375e+000, -2.936334e+001, -7.526495e+000, 1.658899e+001, 2.091596e+001, -5.561104e-002, -4.034622e+000, -6.736095e+000, 1.665660e+000, 2.576905e-001, 6.929726e-001, 8.381522e+000, 5.644600e-001, -1.525343e+001, 6.323905e-001, -1.553335e+001, -3.043886e+000},
{1.027417e+000, -2.751228e+000, 2.685818e+000, -1.120560e+000, -4.690755e+000, -8.354736e+000, -8.857407e+000, 7.515735e+000, -1.524375e+000, -1.461515e+001, 5.208316e+000, -3.465332e+000, -7.197041e+000, -3.334010e+000, 8.990505e+000, 8.563726e+000, -1.207572e+001, 7.270464e+000, 4.318787e+000, 3.853700e+000, -1.571141e+001, -1.008737e+001, -4.538526e+000, -1.272767e+000, -9.376854e+000, 7.655868e+000, -7.154560e+000, -1.528640e+001, -1.422246e+001, -5.041380e+000, 1.246585e+001, -1.216023e+000, 1.143565e+000, -7.470008e+000, -7.861081e+000, 3.706064e+000, -4.148807e+000, -1.366863e+001, -4.950923e+000, -1.507283e+000, 1.237252e+001, 8.296765e-001, -1.606962e+001, -1.006770e+000, -7.912582e+000, 1.392143e+001, -9.878820e+000, 4.247047e+000, 1.637753e+001, 5.846410e+000, 4.010719e+000, 9.127572e+000, -2.965278e+000, -4.458133e+000, -3.669011e+000, -6.740525e+000, -5.842568e+000, 2.928810e+000, -4.494811e+000, 2.416030e+000, 9.865948e-001, 4.040980e-001, -5.249897e-001, -6.697267e+000, -5.560522e+000, -6.636273e+000, -3.525781e+000, -3.101926e+000, -1.056435e+001, -8.271193e+000, -1.855703e+000, -2.768459e+000, -3.851560e+000, 5.099664e+000, 6.622058e-002, 5.679781e+000, 9.137207e+000, -2.443559e+000, -5.847285e+000, -5.379052e+000, 1.463617e+000, -8.440467e+000, 5.810073e+000, -5.616314e+000, -9.370009e+000, -1.127918e+001, -2.147523e+000, -4.988795e+000, -3.940582e+000, -6.702439e-001, 1.070076e+001, 5.658187e+000, -3.910056e+000, 1.057866e+001, 3.718416e+000, 6.478311e+000, 2.522901e+000, 1.817932e+000, -1.003309e+001, 1.476990e+001, -5.384675e+000,

© ISO/IEC 2004 — All rights reserved


Copyright International Organization for Standardization
Provided by IHS under license with ISO
No reproduction or networking permitted without license from IHS
Not for Resale

5.792703e-001, -8.676203e+000, -1.416171e+001, 4.702325e+000, -9.905745e+000, -5.943579e+000, 5.607865e+000, -4.784962e+000, -3.171850e+000, -6.827765e+000, 9.628497e+000, 1.911465e+001, 1.399861e+001, -1.373279e+001, 2.103506e+001, 9.144982e+000, 4.392894e+000, -5.295013e+000, 1.109174e+001, 1.184769e+000, 1.362883e+001, -2.997464e+001, -7.316161e+000, 4.477195e+000, -2.176186e+001, 7.516667e+000, -9.679604e+000, 1.137283e+001, 1.461185e+001, 1.119070e+001, -2.136659e+000, -2.279431e+001, 1.605099e+000, -8.301983e+000, -9.863820e+000, -2.292496e+001, -2.512149e+001, -2.577626e+001, -9.520822e+000, -5.020529e-001, -5.404012e+000, 1.435012e+001, 1.636044e+001, -7.126214e-001, 3.250187e+000, -1.375759e+001, 8.065603e+000, 8.416473e+000, 1.863637e+000}
};

PCLDA basis matrix $\Psi_1^h$ [40][2576]={
{2.846648e-002, 1.252325e-003, 5.082870e-002, 7.467927e-003, -1.542618e-002, -1.550257e-002, -3.243653e-003, 4.026959e-004, -1.519799e-002, -1.587389e-002, -1.873529e-003, 4.078223e-003, -5.003649e-003, -1.779815e-002, -2.184917e-002, -1.890625e-002, -9.968977e-003, -2.693702e-003, -5.531106e-004, -1.359465e-003, -6.466863e-003, -1.130878e-002, -1.154279e-002, -9.857874e-003, -6.436155e-003, -3.380056e-003, -1.981143e-003, 3.319499e-003, 1.073919e-002, 1.505885e-002, 1.397487e-002, 1.414233e-002, 2.193272e-002, 3.229014e-002, 3.489162e-002, 3.317683e-002, 3.397162e-002, 2.913991e-002, 1.217793e-002, -7.001627e-003, -1.630103e-002, -2.073815e-002, -1.461485e-002, 4.260161e-003, 5.011609e-002, 9.292139e-002, 7.378928e-002, 2.123669e-002, 5.686080e-002, 1.035105e-002, -2.284889e-003, 2.155255e-002, 3.183637e-002, 9.796893e-003, -1.545550e-002, -6.770566e-003, 4.941655e-003, -5.209031e-003, -2.071695e-002, -2.807147e-002, -2.318645e-002, -8.497875e-003, 2.135425e-003, 2.851684e-003, -9.224085e-004, -6.385183e-003, -1.260755e-002, -1.261931e-002, -1.446136e-002, -1.476270e-002, -1.290753e-002, -1.368490e-002, -1.670726e-002, -1.997428e-002, -2.429838e-002, -1.980739e-002, -1.069156e-002, -1.406006e-002, -1.974923e-002, -1.712415e-002, -1.154207e-002, -1.274827e-002, -1.808928e-002, -6.145756e-003, 3.521230e-003, -1.094247e-003, -2.869024e-003, 8.370609e-003, 1.966102e-002, 4.710969e-002, 3.411051e-002, 9.097641e-002, 5.800581e-002, -4.212253e-003, 2.326237e-002, -1.885789e-002, -1.209658e-002, 1.900294e-002, 1.828294e-002, -1.507962e-002, -1.813914e-002, 6.027774e-003, 6.379942e-003, -3.907645e-003, -7.370534e-003, 3.378499e-003, 1.920272e-002, 2.609265e-002, 2.293904e-002, 1.797029e-002, 1.298596e-002, 6.228038e-003, 3.425704e-003, 2.258646e-003, 3.731013e-003, 5.268352e-003, 5.661151e-003, 6.622511e-003, 4.991441e-003, -2.797509e-003, -1.478390e-002, -1.955309e-002, -1.298533e-002, -5.667052e-003, -1.042558e-002, -1.855899e-002, -1.522487e-002, -1.156654e-002, -1.442204e-002, -2.825957e-002, -2.429462e-002, -1.187650e-002, -9.542938e-003, 2.543765e-003, 1.230763e-002, 2.401114e-002, 4.655364e-003, 6.649871e-002, 4.000873e-002, -2.439823e-002, 2.397063e-003, -2.853679e-002, -6.777065e-003, 1.944518e-002, 2.439900e-003, -2.613894e-002, -5.934261e-003, 4.397608e-003, 1.718150e-003, 3.901808e-003, 1.247827e-002, 1.939286e-002, 2.071765e-002, 1.696001e-002, 1.410832e-002, 9.071148e-003, 5.253190e-003, -1.956840e-003, -6.547711e-003, -4.258391e-003, 2.071631e-003, 1.081787e-002, 1.462849e-002, 1.280091e-002, 9.407106e-003, 6.177748e-003, 3.205490e-003, -5.716183e-003, -1.378575e-002, -6.106694e-003, 3.162292e-003, -6.899725e-003, -1.852057e-002, -1.765956e-002, -3.608063e-003, -8.996536e-003, -4.051280e-002, -2.873394e-002, -1.242983e-002, 3.320696e-003, 1.464281e-002, 1.584009e-002, -1.428705e-002, 4.048369e-002, 6.618179e-002, 2.942936e-004, 2.690007e-002, 6.027282e-003, 2.811832e-002, 3.664710e-002, 6.963012e-003, -3.518915e-003, 1.208426e-002, 1.437428e-002, 9.455666e-003, 4.405002e-003, -1.345767e-004, -5.774210e-003, -6.208617e-003, -6.221926e-003, -1.115240e-002, -1.706666e-002, -2.792511e-002, -3.684598e-002, -3.299467e-002, -2.228592e-002, -8.361547e-003, 4.888027e-003, 9.300913e-003, 6.554606e-003, 2.362867e-003, -1.155768e-003, -2.904027e-003, -4.434268e-003, -9.894000e-003, -1.266314e-002, 5.015180e-004, 1.120701e-002, 9.583342e-003, 3.724898e-004, 4.069004e-003, 1.653399e-002, 3.056540e-003, -1.089225e-002, 6.609752e-003, 3.408288e-002, 2.310104e-002, 1.400693e-002, -2.512686e-002, 1.380345e-002, 5.167572e-002, -7.281389e-003, 1.954972e-002, 3.857690e-003, 2.976710e-002, 2.507254e-002, 8.070351e-003, 1.576053e-002, 2.740816e-002, 2.769953e-002, 1.498614e-002, 8.615012e-003, 1.045395e-003, 3.307051e-003, 8.840675e-003, 9.782264e-003, -8.922870e-004, -1.212587e-002, -2.385907e-002, -2.472500e-002, -1.626072e-002, -2.268766e-003, 1.337938e-002, 2.316183e-002, 2.116455e-002, 1.256918e-002, 2.244096e-003, -3.662656e-003, -4.495730e-003, -4.888632e-004, -2.419181e-004, -5.621684e-003, -7.504324e-003, 3.015720e-003, 1.216641e-002, 1.448188e-002, 6.277284e-003, 1.120263e-002, 2.747457e-002, 7.373489e-003, 8.189715e-004, 2.632932e-002, 2.526459e-002, 1.263644e-002, -3.208152e-002, -9.993693e-006, 4.565311e-002, -1.482836e-002, 1.289571e-002, 2.192859e-003, 1.622685e-002, 8.478467e-003, 8.461116e-003, 1.265386e-002, 2.322380e-002, 1.260399e-002, 7.651904e-003, 1.128749e-002, 1.186597e-002, 1.994883e-002, 2.684143e-002, 1.867911e-002, 3.128769e-003, -1.116975e-002, -1.559603e-002, -9.183590e-003, 3.109276e-003, 1.789298e-002, 2.381403e-002, 2.541483e-002, 1.504376e-002, -6.623382e-004, -1.110301e-002, -2.093820e-002, -


© ISO/IEC 2004 — All rights reserved

Copyright International Organization for Standardization
Provided by IHS under license with ISO
No reproduction or networking permitted without license from IHS
Not for Resale

2.266292e-002, -1.765037e-002, -7.334248e-003, -5.101072e-003, -2.507272e-003, -3.162120e-003, -1.887184e-003, 7.773192e-003, 1.255872e-002, 8.598686e-003, 2.261658e-002, 2.332182e-002, 5.373269e-003, 1.971663e-002, 4.578110e-002, 1.599753e-002, -2.996448e-002, -5.311497e-003, 4.148034e-002, -1.571847e-002, 1.098461e-002, -1.025638e-002, 3.087920e-003, 7.356325e-003, 4.833388e-003, 7.270140e-003, 8.447410e-003, -1.857160e-003, 1.228725e-002, 1.771701e-002, 2.504094e-002, 3.353662e-002, 3.313369e-002, 1.762345e-002, -1.673096e-003, -1.205904e-002, -5.303224e-003, 8.902207e-003, 1.873895e-002, 2.715757e-002, 2.521896e-002, 1.847657e-002, 3.898878e-003, -1.342626e-002, -2.791097e-002, -3.870722e-002, -3.713044e-002, -2.966605e-002, -1.384178e-002, 3.056998e-003, 7.892716e-003, 9.290086e-003, 4.789421e-003, -7.515747e-004, 4.740991e-003, 7.241801e-003, 1.363812e-002, 1.552500e-002, 1.123360e-002, 6.790488e-003, 2.788974e-002, 1.318896e-002, -2.420911e-002, 3.189720e-004, 3.266730e-002, -2.020190e-002, 2.500668e-003, -2.062707e-002, 2.406204e-003, 6.963607e-003, -4.687261e-003, -4.768419e-003, -2.419828e-003, 1.936131e-003, 1.341611e-002, 1.762771e-002, 3.022855e-002, 3.366289e-002, 2.153393e-002, 2.482744e-003, -5.121742e-003, -8.682062e-003, 5.337009e-004, 1.241928e-002, 2.001465e-002, 2.112387e-002, 1.634663e-002, 5.390962e-003, -4.974829e-003, -1.916059e-002, -3.087798e-002, -3.974146e-002, -3.799632e-002, -3.015930e-002, -1.155360e-002, 1.251595e-002, 2.247835e-002, 1.832107e-002, 1.504406e-002, 8.476262e-003, 2.594817e-003, 5.642946e-003, 9.726138e-003, 3.870570e-003, 4.705678e-003, 1.599817e-003, 1.760439e-002, 2.957287e-003, -2.429928e-002, -7.539978e-004, 2.164031e-002, -2.514757e-002, -2.636791e-003, -2.098136e-002, 6.530046e-003, 3.758370e-003, -2.157237e-002, -8.315407e-003, 3.654649e-003, 2.144243e-003, 4.825285e-003, 1.210209e-002, 2.107679e-002, 1.614874e-002, 2.624787e-003, -4.232986e-003, -6.413139e-003, -1.103059e-002, -8.329455e-004, 9.768233e-003, 1.646147e-002, 1.253000e-002, 5.086490e-003, -5.411101e-003, -1.087995e-002, -1.598898e-002, -2.138734e-002, -2.558869e-002, -2.503955e-002, -1.895209e-002, -6.485331e-003, 1.502407e-002, 2.615611e-002, 2.483274e-002, 2.014139e-002, 1.817019e-002, 1.014188e-002, -1.679600e-004, 7.637864e-003, 9.154031e-004, -3.917863e-003, -1.701557e-003, 5.668053e-003, -7.149401e-003, 9.870186e-003, 2.148134e-003, 1.458865e-002, 2.141945e-002, -3.435558e-003, -2.572057e-002, 1.029467e-002, -8.265515e-003, -2.342000e-002, 3.776523e-004, 5.418049e-003, -8.295861e-003, -3.772784e-003, -2.573312e-003, -2.677513e-004, 1.658740e-004, 2.081678e-003, 2.334460e-003, -3.309993e-003, -6.742426e-003, 2.146322e-003, 1.139340e-002, 1.825853e-002, 1.427036e-002, 8.803073e-003, -3.383537e-003, -1.127481e-002, -1.226423e-002, -1.300158e-002, -1.384706e-002, -1.359753e-002, -7.536267e-003, 7.044274e-003, 2.141380e-002, 2.800218e-002, 2.722010e-002, 1.997492e-002, 1.413728e-002, 1.872051e-002, 5.747116e-003, 3.292416e-003, 5.900560e-003, -3.309566e-003, -2.041587e-003, 4.885146e-004, -1.560075e-002, 8.235971e-003, 8.369738e-003, 1.252995e-002, 2.592054e-002, -3.195806e-003, -2.553656e-002, 7.708939e-003, -1.519836e-002, -1.299038e-002, 6.480593e-003, 5.009846e-004, -1.434821e-002, -1.456495e-002, -1.563026e-002, -8.777973e-003, 6.427648e-004, 1.015860e-002, 1.588019e-002, 7.913399e-003, 5.008241e-003, 8.938999e-003, 1.689318e-002, 2.491683e-002, 2.613783e-002, 1.989666e-002, 5.496971e-003, -6.533166e-003, -1.025620e-002, -8.353012e-003, -7.539737e-003, -7.522230e-003, -3.532741e-004, 1.212079e-002, 2.697799e-002, 3.050636e-002, 2.697592e-002, 1.316302e-002, 3.820217e-003, 1.049029e-002, 1.135164e-002, 2.549445e-003, 5.980276e-003, -5.117885e-004, -2.479872e-003, 5.450908e-003, -1.534569e-002, 5.149659e-003, 1.291486e-002, 3.483489e-003, 2.919834e-002, 2.663124e-003, -4.794638e-003, 6.854931e-003, -1.383628e-002, -4.227475e-003, 5.994006e-003, -5.861462e-003, -1.814158e-002, -2.121510e-002, -1.582135e-002, -6.526987e-003, 8.123459e-003, 2.129567e-002, 2.331281e-002, 1.329495e-002, 5.631240e-003, 8.046863e-003, 1.373987e-002, 2.359245e-002, 2.920135e-002, 2.410126e-002, 1.061570e-002, 3.081825e-004, -3.247708e-003, -3.253029e-003, -5.616508e-003, -9.890615e-003, -6.417278e-004, 1.034265e-002, 2.312116e-002, 2.563987e-002, 2.042402e-002, 1.069002e-002, -5.589287e-003, -3.056176e-003, 7.474865e-003, 3.658749e-003, 8.854915e-004, 7.763731e-003, -1.299471e-003, 8.150047e-003, -5.437510e-003, 8.523795e-004, 1.369963e-002, -8.670189e-003, 3.127728e-002, 8.749698e-003, 8.821308e-004, 1.176361e-002, -5.426234e-003, -5.130089e-003, 1.552449e-003, -6.161055e-003, -1.227018e-002, -9.044539e-003, -5.923957e-003, 4.860816e-003, 1.679090e-002, 2.420637e-002, 1.704222e-002, 4.198825e-003, -3.884658e-003, -2.449758e-003, 8.323134e-003, 2.310851e-002, 2.801162e-002, 2.370804e-002, 1.259073e-002, 3.424197e-003, -2.801916e-003, -4.509935e-003, -9.682920e-003, -1.438560e-002, -1.003399e-002, 4.614745e-004, 1.140256e-002, 1.741689e-002, 1.377547e-002, 7.377467e-003, -1.052502e-002, -1.510840e-002, 1.812451e-003, 5.884394e-003, -7.229689e-003, 9.888533e-003, 8.532863e-003, 4.411611e-003, 1.703454e-003, 4.305893e-004, 1.664118e-002, -1.930269e-002, 2.696149e-002, 8.155993e-003, 6.720353e-003, 1.659812e-002, -3.701481e-003, -6.094448e-003, -2.108198e-003, -4.419795e-004, 2.181004e-004, 7.571806e-003, 9.742041e-003, 1.670766e-002, 2.061898e-002, 1.573072e-002, 3.130364e-003, -1.335914e-002, -2.204516e-002, -1.616378e-002, -2.819068e-003, 1.405506e-002, 2.127236e-002, 1.967760e-002, 9.919829e-003, 8.361069e-004, -7.711101e-003, -8.929472e-003, -1.317792e-002, -1.866128e-002, -1.701518e-002, -9.956184e-003, -1.569402e-003, 6.014552e-003, 9.167690e-003, 8.852959e-003, -8.347496e-003, -1.935396e-002, -8.437032e-003, 1.979337e-003, -1.274596e-002, 2.990354e-003, 1.447453e-002, 6.882772e-005, 1.678168e-002, -

© ISO/IEC 2004 — All rights reserved


Copyright International Organization for Standardization
Provided by IHS under license with ISO
No reproduction or networking permitted without license from IHS
Not for Resale

4.480757e-003, 1.264750e-002, -2.705390e-002, 2.141130e-002, 9.468841e-003, 1.030071e-002, 2.649082e-002, -5.822207e-004, -8.779533e-003, -3.228490e-003, 5.337086e-003, 1.094693e-002, 2.284477e-002, 2.637214e-002, 2.814690e-002, 1.871793e-002, 7.077929e-003, -5.770476e-003, -1.928571e-002, -2.970890e-002, -2.695576e-002, -1.250617e-002, 3.906717e-003, 1.707461e-002, 2.008709e-002, 1.420087e-002, 3.086958e-003, -8.502872e-003, -1.289439e-002, -1.570265e-002, -1.811026e-002, -1.519346e-002, -1.166303e-002, -3.513186e-003, 7.948637e-003, 1.709083e-002, 2.011645e-002, 4.689981e-003, -1.584450e-002, -1.260591e-002, -5.868030e-003, -2.042325e-002, -2.588519e-004, 1.719762e-002, -2.462899e-003, 7.745399e-003, -1.206093e-002, 2.235263e-003, -2.731974e-002, 1.204603e-002, 1.999170e-003, 8.110937e-003, 2.992293e-002, -2.298482e-003, -6.002255e-003, 2.638677e-004, 1.387897e-002, 2.016527e-002, 2.957968e-002, 3.249485e-002, 2.810825e-002, 1.872357e-002, 8.836033e-003, 1.332229e-003, -6.802217e-003, -1.516271e-002, -1.589022e-002, -1.026231e-002, -6.543172e-004, 1.139158e-002, 1.936256e-002, 1.870804e-002, 9.649811e-003, -4.588799e-003, -8.837600e-003, -6.103297e-003, -3.719260e-003, 1.232374e-003, 4.021673e-003, 8.305238e-003, 2.118950e-002, 3.615052e-002, 4.128024e-002, 2.461713e-002, 4.644428e-003, -1.719836e-004, -1.780996e-003, -2.209543e-002, -9.704304e-004, 1.557522e-002, -1.501838e-003, 3.811880e-003, -1.739328e-002, -3.503085e-003, -2.259004e-002, 1.839693e-003, -1.216682e-002, 1.459999e-003, 2.369359e-002, -9.618737e-004, 1.919607e-003, 5.605460e-003, 1.380001e-002, 1.720348e-002, 1.908096e-002, 1.729586e-002, 7.048621e-003, -8.500978e-004, -8.416499e-003, -6.677587e-003, -2.824047e-003, 4.389438e-003, 5.104240e-003, 5.148072e-003, 2.137435e-003, 7.300290e-003, 1.149720e-002, 1.769156e-002, 1.139214e-002, 2.773645e-003, -1.849573e-003, -2.100680e-003, -2.295385e-003, -2.234404e-003, -4.409210e-003, -1.559182e-003, 7.559210e-003, 3.126755e-002, 4.666952e-002, 3.855816e-002, 1.821839e-002, 6.313044e-003, -2.384076e-003, -2.486839e-002, -2.699973e-004, 1.114038e-002, 1.065513e-003, 5.584216e-003, -2.096377e-002, -8.361523e-003, -1.095161e-002, -6.030853e-003, -2.076337e-002, -6.229855e-003, 1.588315e-002, 5.029400e-003, 9.346811e-003, 6.115582e-003, 2.398880e-003, 8.267197e-004, 1.413140e-004, 2.746532e-003, -4.986258e-003, -1.791798e-002, -2.502568e-002, -1.604368e-002, 7.996520e-004, 1.744045e-002, 2.705150e-002, 3.054717e-002, 2.263331e-002, 1.611379e-002, 1.610278e-002, 2.344452e-002, 1.972106e-002, 2.214079e-002, 2.044421e-002, 1.216325e-002, 7.013985e-004, -1.641690e-002, -3.057137e-002, -3.477261e-002, -2.968763e-002, -9.911341e-003, 1.792598e-002, 3.271768e-002, 2.627924e-002, 1.149354e-002, -1.118265e-003, -2.357899e-002, -3.450007e-004, 6.454753e-003, 4.953473e-003, 1.121523e-002, -2.020770e-002, -8.860340e-003, -4.900794e-003, -1.261162e-002, -2.556968e-002, -8.465094e-003, 1.285719e-002, 7.390678e-003, 1.685833e-002, 2.366181e-003, -1.191688e-002, -1.913511e-002, -1.131963e-002, 5.462374e-003, -4.026923e-003, -2.398628e-002, -2.740231e-002, -1.650233e-002, -3.501015e-003, 9.559617e-003, 2.118048e-002, 2.610292e-002, 2.418135e-002, 1.736482e-002, 1.698588e-002, 2.196055e-002, 2.296081e-002, 3.643088e-002, 4.242194e-002, 3.669834e-002, 2.189898e-002, 3.397368e-003, -1.559118e-002, -3.289609e-002, -4.261593e-002, -3.863333e-002, -2.766986e-002, -1.087497e-002, 9.201738e-003, 9.103550e-003, -2.306192e-003, -1.509689e-002, 7.102459e-003, -1.294417e-004, 6.456324e-003, 1.757700e-002, -1.531309e-002, -3.864786e-003, 2.928454e-003, -1.360353e-002, -2.203819e-002, -4.314469e-003, 1.343686e-002, 8.699277e-003, 1.695993e-002, -1.156200e-002, -2.369851e-002, -2.266235e-002, -1.610919e-002, -1.215977e-002, -3.136288e-002, -4.352439e-002, -3.468043e-002, -2.441918e-002, -1.580099e-002, -1.490602e-002, -9.873044e-003, 8.444849e-004, 5.393194e-003, -1.508048e-003, -4.465156e-003, -1.065795e-003, 4.534429e-003, 2.586069e-002, 3.999749e-002, 3.321558e-002, 1.912752e-002, 4.429872e-003, -4.667821e-003, -1.674212e-002, -3.333235e-002, -3.966961e-002, -3.134599e-002, -2.644641e-002, -2.387842e-002, -1.458501e-002, -1.102722e-002, -1.215395e-003, 2.212478e-002, 1.421989e-003, 8.900122e-003, 1.789544e-002, -2.187475e-003, 6.200485e-003, 4.333997e-002, -2.543364e-003, -1.797264e-002, 1.691514e-003, 1.131141e-002, 1.225011e-002, 1.923866e-002, -1.546215e-002, -1.115629e-002, -1.084999e-002, -1.580514e-002, -4.104562e-003, -1.213732e-002, -1.508868e-002, -2.710393e-003, 6.266698e-003, 1.204565e-002, 9.098173e-003, -6.509089e-003, -3.350373e-003, 4.882436e-003, -2.069696e-003, -1.753976e-002, -2.430016e-002, -1.103392e-002, 1.334551e-002, 3.279690e-002, 2.699237e-002, 1.451553e-002, 6.153169e-003, -7.663273e-004, -6.923499e-003, -1.757821e-002, -2.595248e-002, -1.538964e-002, -1.596999e-002, -2.394818e-002, -2.286701e-002, -8.936387e-003, 1.784657e-002, 3.846747e-002, 5.549505e-003, 1.421030e-002, 1.644469e-002, 4.346233e-003, 1.312340e-002, 4.842233e-002, 9.011718e-003, -5.690763e-003, 7.455657e-003, 1.321285e-002, 1.483494e-002, 2.447759e-002, 5.213311e-003, 1.986453e-002, 7.285114e-003, -6.965276e-003, 2.974108e-004, -8.512137e-003, -2.646674e-002, -4.682086e-002, -3.588648e-002, -2.056993e-002, -2.697019e-002, -3.565027e-002, -2.770910e-002, -6.104984e-003, 4.792771e-003, -1.678899e-002, -2.788627e-002, -2.242400e-002, -6.134991e-003, 9.866062e-003, -3.121847e-003, -2.858904e-002, -4.402024e-002, -4.757153e-002, -4.654690e-002, -4.436221e-002, -3.691699e-002, -2.764432e-002, -1.603666e-002, -1.115962e-002, -1.458888e-002, 1.664963e-004, 3.217024e-002, 4.052922e-002, 1.024868e-002, 1.684249e-002, 1.424840e-002, 2.970017e-003, 3.001374e-002, 5.241673e-002, 1.855157e-002, 4.118288e-003, 1.355340e-002, 1.880181e-003, 1.516630e-002, 2.479887e-002, 2.000872e-002, 3.758322e-002, 2.757404e-002, 2.941752e-003, -1.495380e-003, 2.217635e-003, 6.946358e-003,


© ISO/IEC 2004 — All rights reserved

Copyright International Organization for Standardization
Provided by IHS under license with ISO
No reproduction or networking permitted without license from IHS
Not for Resale

4.909930e-003, 5.116102e-002, 6.303128e-002, 1.652979e-002, -4.357736e-002, -6.310384e-002, -4.428436e-002, 9.177786e-003, -8.902931e-003, -2.783821e-002, -2.068947e-002, -1.560006e-002, -1.773769e-002, -4.011954e-002, -2.607100e-002, -9.192184e-003, 3.200293e-002, 4.995914e-002, 2.272381e-002, -1.958804e-003, -2.328504e-002, -1.920618e-002, -3.469730e-003, 1.203616e-002, 1.387424e-002, 3.161192e-002, 3.515893e-002, 1.162399e-002, 1.275412e-002, 6.336916e-003, 1.229121e-003, 3.045158e-002, -3.342923e-002, 2.120487e-002, 3.723401e-003, 2.524745e-003, -1.592807e-002, -2.472092e-003, 5.893874e-003, 1.042687e-002, 3.321310e-002, 2.999615e-002, 1.135900e-002, 1.836344e-002, 2.670830e-002, -1.930851e-003, -7.253126e-003, 5.865317e-002, 5.185193e-002, -1.590480e-003, -3.134130e-002, -6.090355e-002, -4.182075e-002, 1.041666e-002, -1.144287e-002, -4.305477e-002, -3.050075e-002, -1.585141e-002, -3.166994e-002, -3.772523e-002, -3.741133e-002, -3.932968e-002, 3.149588e-002, 6.480499e-002, 2.772655e-002, 1.757870e-002, 1.467608e-003, -7.780900e-003, 1.027059e-002, 2.859563e-002, 1.280457e-002, 1.234144e-002, 7.180917e-003, -7.184454e-003, 1.281344e-004, -3.587446e-003, -4.850545e-003, 3.581680e-002, -2.862483e-002, 2.176748e-002, -9.101374e-003, -1.362171e-002, -1.604284e-002, -1.317677e-002, -2.081094e-002, -1.268764e-002, 1.055026e-002, 1.029675e-002, 1.004084e-002, 1.964079e-002, 1.509450e-002, -9.742041e-003, -2.510753e-002, -1.185986e-002, -1.412601e-002, -2.566036e-002, -3.207385e-002, -4.444578e-002, -2.847761e-002, 6.749008e-003, -2.104255e-002, -5.158294e-002, -3.760053e-002, -1.887892e-002, -3.129861e-002, -4.496980e-002, -4.952474e-002, -5.881829e-002, -4.510106e-002, -2.687712e-002, -2.382132e-002, -8.378925e-003, -3.907740e-003, -8.531702e-003, 6.850810e-003, 2.674872e-002, 9.318275e-003, 2.789817e-003, -1.046663e-002, -2.089344e-002, -7.702226e-003, -1.046470e-002, -6.338857e-003, 4.547482e-002, -1.637903e-002, 2.890762e-002, -2.790521e-002, -2.432561e-002, 1.766593e-003, -3.462096e-003, -2.847168e-002, -2.483647e-002, -3.559382e-003, 3.726148e-003, 1.073767e-002, 1.887490e-002, 1.932320e-002, 1.272650e-002, 5.487736e-003, 3.279824e-003, -7.384282e-004, -9.169398e-003, -2.353910e-002, -3.256504e-002, -1.737550e-002, 2.830690e-003, -3.057373e-002, -5.665419e-002, -4.074816e-002, -9.131973e-003, -3.087159e-002, -4.194363e-002, -3.999831e-002, -3.746915e-002, -2.953713e-002, -1.604877e-002, -3.095566e-003, 1.190511e-002, 1.497492e-002, 9.057852e-003, 1.520149e-002, 2.547804e-002, 2.676238e-003, -4.398801e-004, -8.778759e-003, -1.575772e-002, -6.693861e-003, -1.604824e-002, -1.039152e-002, 4.984819e-002, -7.027283e-003, 3.939942e-002, -3.212587e-002, -2.857789e-002, 1.664047e-002, 8.203282e-003, -1.594161e-002, -2.261298e-002, -7.018822e-003, 4.960108e-003, 1.480924e-002, 2.256452e-002, 2.436177e-002, 1.634423e-002, 8.851859e-003, 5.359574e-003, -1.640642e-003, -1.439784e-002, -2.417857e-002, -2.013112e-002, 1.862760e-003, 3.451606e-004, -3.677423e-002, -5.962739e-002, -4.703988e-002, -8.556537e-003, -1.722527e-002, -2.665964e-002, -3.110440e-002, -2.812698e-002, -1.747001e-002, -3.749026e-003, 7.721743e-003, 2.058079e-002, 2.710533e-002, 1.611700e-002, 1.596149e-002, 2.409352e-002, 3.606698e-003, 4.769938e-003, 6.647440e-003, -6.047356e-003, -6.419647e-003, -1.892448e-002, -7.123406e-003, 5.597463e-002, -2.630811e-003, 5.067479e-002, -2.089087e-002, -2.099953e-002, 2.175479e-002, 1.589501e-002, 4.417441e-003, -9.666722e-003, -5.258017e-003, 2.376594e-003, 1.496390e-002, 2.369888e-002, 2.191464e-002, 8.534268e-003, 1.881552e-003, -5.182132e-003, -1.342797e-002, -2.423393e-002, -2.310720e-002, -2.690986e-004, 1.506727e-002, -1.046755e-002, -4.206329e-002, -5.938295e-002, -4.939842e-002, -1.655059e-002, -6.168347e-003, -1.568179e-002, -1.941110e-002, -2.503149e-002, -1.779285e-002, -4.352902e-003, 5.638944e-003, 1.730772e-002, 2.155191e-002, 8.286233e-003, 1.313387e-002, 1.715118e-002, 4.190184e-003, 1.421866e-002, 1.907400e-002, -5.553704e-003, -1.160461e-002, -2.104664e-002, 1.075275e-005, -3.001828e-002, -8.060216e-003, 5.822048e-002, -1.113050e-002, -1.369484e-002, 2.007787e-002, 1.914178e-002, 2.146672e-002, 6.076146e-003, 2.713869e-004, 4.063909e-003, 1.739807e-002, 2.634780e-002, 2.239958e-002, 4.804835e-003, -2.916841e-003, -1.469959e-002, -2.434504e-002, -2.768361e-002, -9.026901e-003, 1.100909e-002, 2.946046e-003, -2.470637e-002, -4.604849e-002, -5.884827e-002, -5.173739e-002, -2.969250e-002, -6.228436e-003, -4.889209e-003, -8.325285e-003, -1.394008e-002, -2.070120e-002, -1.711172e-002, -6.931351e-003, 9.408550e-003, 1.648608e-002, 1.237243e-002, 1.045749e-002, 1.068653e-002, 7.135309e-004, 1.797810e-002, 2.704202e-002, -2.909298e-003, -1.342102e-002, -1.763945e-002, 8.332074e-003, -2.154242e-002, -4.450213e-002, 6.146836e-002, -1.689429e-003, -1.148290e-002, 1.511484e-002, 7.261432e-003, 2.458612e-002, 2.339378e-002, 7.656717e-003, 1.287532e-002, 2.389553e-002, 3.112107e-002, 2.633315e-002, 7.108009e-003, -4.255258e-003, -1.343785e-002, -1.668333e-002, -1.149513e-002, 6.865389e-003, 1.845307e-002, -1.382750e-002, -3.295018e-002, -4.833124e-002, -5.777849e-002, -4.540193e-002, -2.717099e-002, -1.551276e-002, 2.041414e-003, 1.731544e-002, 1.365982e-002, -8.213545e-004, -3.767048e-003, 3.240897e-003, 1.777923e-002, 2.602724e-002, 1.419147e-002, 1.165698e-002, 4.171615e-003, -9.393535e-006, 2.047310e-002, 2.417221e-002, -3.524845e-003, -1.532917e-002, -1.626510e-002, 1.180685e-002, -3.765096e-002, -4.744357e-002, 5.174189e-002, -4.007393e-004, -1.428001e-002, 1.101521e-002, -2.311579e-003, 1.868737e-002, 2.880344e-002, 1.582849e-002, 1.701168e-002, 2.669072e-002, 3.456798e-002, 3.217369e-002, 1.562174e-002, 9.495076e-003, 1.457892e-003, -1.652142e-003, 5.068558e-003, 2.339674e-002, 1.502790e-002, -1.295886e-002, -1.917430e-002, -2.706808e-002, -3.408600e-002, -2.219276e-002, -3.048445e-003, 4.097803e-003, -2.685452e-003, 2.421448e-002, 4.418713e-002,

© ISO/IEC 2004 — All rights reserved


Copyright International Organization for Standardization
Provided by IHS under license with ISO
No reproduction or networking permitted without license from IHS
Not for Resale

3.858494e-002, 2.943830e-002, 2.732275e-002, 3.109028e-002, 2.703902e-002, 1.219924e-002, 7.206971e-003, 9.156890e-004, -1.265712e-003, 2.139112e-002, 2.117147e-002, -4.585278e-003, -1.492750e-002, -1.270839e-002, 1.999934e-002, -3.649282e-002, -4.520743e-002, 4.244182e-002, -4.542847e-003, -1.635373e-002, 1.562048e-002, -6.037471e-004, 1.140399e-002, 2.153406e-002, 1.774318e-002, 1.731671e-002, 2.641632e-002, 3.257927e-002, 3.118314e-002, 1.601962e-002, 5.950858e-003, -2.651339e-003, 1.656863e-003, 9.985167e-003, 1.309386e-002, -8.020142e-003, -2.560893e-002, -1.270453e-002, -7.209719e-003, -1.761443e-002, -2.088161e-002, -6.611207e-003, 1.016438e-002, 3.104718e-003, 8.869726e-003, 3.985273e-002, 4.943551e-002, 4.339578e-002, 3.912556e-002, 3.838309e-002, 3.130161e-002, 1.420215e-002, 6.720212e-003, -2.116072e-003, -6.016113e-003, 2.080429e-002, 2.271608e-002, -9.277029e-004, -1.601998e-002, -3.449264e-003, 3.357023e-002, -3.040882e-002, -4.384645e-002, 3.888587e-002, -2.630527e-003, -9.441980e-003, 2.303770e-002, 2.375406e-003, 8.322977e-004, 1.186473e-002, 1.616339e-002, 1.681256e-002, 2.245881e-002, 2.746575e-002, 2.831882e-002, 1.376633e-002, -2.482722e-003, -3.760039e-003, 8.207545e-003, 2.193632e-002, 5.742432e-003, -2.808932e-002, -3.843584e-002, -2.535113e-002, -1.526147e-002, -5.870123e-003, -1.258893e-002, -2.320069e-002, -2.044003e-002, -7.811676e-003, -6.056003e-003, 1.619281e-002, 3.506496e-002, 4.043961e-002, 3.858844e-002, 3.666044e-002, 2.620211e-002, 1.098089e-002, 5.911795e-003, -7.443363e-003, -1.036835e-002, 1.393199e-002, 2.630438e-002, -3.034421e-004, -1.344102e-002, 3.343271e-003, 4.161834e-002, -2.474026e-002, -2.530007e-002, 4.540429e-002, 4.167611e-003, -4.440871e-003, 2.540562e-002, -6.648851e-003, -1.972217e-002, -6.075577e-003, 8.325935e-003, 1.395200e-002, 2.081969e-002, 2.148628e-002, 2.331814e-002, 1.090311e-002, -3.525540e-004, 2.218279e-003, 1.575366e-002, 2.676235e-002, 1.353948e-002, 9.845709e-004, 3.245989e-004, -1.078233e-002, -8.227687e-003, 1.432735e-002, 1.816230e-002, -4.955618e-004, -2.522705e-002, -2.351844e-002, -2.169179e-002, -1.246689e-002, 8.289058e-003, 2.585905e-002, 3.777609e-002, 3.783822e-002, 2.215820e-002, 9.428638e-003, 6.145513e-003, -6.529058e-003, -1.632888e-002, 6.316490e-003, 2.149108e-002, 6.391569e-003, -5.898583e-003, 7.421718e-003, 4.414463e-002, -1.937632e-002, -2.372568e-003, 5.464001e-002, 6.993455e-003, 2.635764e-003, 3.118281e-002, 5.963600e-003, -1.149883e-002, -4.249124e-003, 3.636987e-003, 1.280099e-002, 1.732210e-002, 1.698175e-002, 1.711769e-002, 1.015959e-002, 1.664926e-003, 3.895605e-003, 1.314591e-002, 1.105602e-002, 2.302131e-003, -3.700007e-003, -5.583615e-003, -1.904878e-002, -2.137665e-002, -2.190301e-003, 9.142029e-003, -9.272995e-004, -2.087390e-002, -2.867985e-002, -3.005756e-002, -3.169566e-002, -1.838216e-002, 4.279408e-003, 2.636210e-002, 3.236277e-002, 1.651548e-002, 1.183862e-002, 6.653777e-003, -6.784502e-003, -1.351088e-002, 3.133812e-003, 2.372826e-002, 1.390567e-002, -3.701373e-003, 9.853067e-003, 4.688464e-002, -3.166895e-003, 2.161549e-002, 7.387014e-002, 1.388346e-002, -3.728339e-003, 1.999406e-002, 1.550199e-002, 3.925749e-004, 9.070796e-003, 8.775112e-003, 1.198048e-002, 1.475575e-002, 1.284883e-002, 9.156836e-003, 7.041305e-003, -1.626705e-003, -4.799132e-003, -8.261789e-003, -2.049417e-002, -2.770716e-002, -3.644883e-002, -4.027858e-002, -3.843735e-002, -3.699882e-002, -2.717800e-002, -1.541069e-002, -2.699914e-002, -4.402423e-002, -4.331682e-002, -3.873523e-002, -3.862301e-002, -3.780962e-002, -1.704743e-002, 1.045189e-002, 2.129953e-002, 8.997429e-003, 9.337442e-003, 5.207187e-003, -1.672232e-003, 5.525197e-004, 6.635882e-003, 2.476442e-002, 7.817925e-003, -5.474556e-003, 1.165660e-002, 5.448757e-002, 1.449674e-002, 4.358669e-002, 5.917842e-002, 2.124970e-002, -2.516919e-003, 9.644338e-003, 1.653489e-002, 4.572772e-003, 8.589216e-003, 9.795637e-003, 1.225620e-002, 1.314809e-002, 1.011518e-002, 8.229852e-004, 2.023538e-003, -7.177521e-003, -1.654057e-002, -2.268811e-002, -2.615648e-002, -3.039290e-002, -3.600784e-002, -3.256209e-002, -2.933061e-002, -2.410442e-002, -2.521386e-002, -2.360016e-002, -2.609357e-002, -3.261036e-002, -3.323286e-002, -2.784283e-002, -2.359600e-002, -2.612171e-002, -2.096113e-002, -3.148819e-003, 6.992863e-003, 5.468977e-003, 1.176165e-002, 9.261873e-003, 1.075077e-002, 1.287754e-002, 1.208366e-002, 1.954373e-002, -4.237491e-003, -3.587782e-003, 2.042021e-002, 6.710975e-002, 3.164349e-002, 5.123654e-002, -1.176919e-002, 1.942434e-002, -8.168089e-003, -2.389800e-003, 6.894486e-003, -3.140682e-004, 3.076002e-003, 1.260442e-002, 9.574071e-003, 1.066183e-002, 9.814964e-003, -2.763808e-003, -2.496397e-003, -5.568998e-003, -8.291059e-003, -3.076041e-003, 2.553573e-003, -8.350862e-003, -2.634480e-002, -2.978423e-002, -2.919104e-002, -2.555556e-002, -2.538145e-002, -2.543651e-002, -1.518492e-002, -5.028549e-003, -6.018334e-003, -7.391637e-003, 3.091832e-003, 9.000455e-003, -1.413591e-003, -6.330053e-003, -2.460004e-003, 2.816338e-003, 1.015825e-002, 1.168198e-002, 2.020426e-002, 1.598832e-002, 4.410788e-003, 7.567506e-003, -8.108447e-003, 7.213354e-003, 2.838137e-002, 7.115393e-002, 4.009509e-002, 5.018616e-002, -1.486020e-002, 2.051406e-002, -8.542890e-003, -5.333359e-003, -2.830289e-003, -9.299115e-003, 9.179542e-004, 1.443228e-002, 6.970384e-003, 9.878893e-003, 7.950785e-003, -1.810578e-003, -1.829979e-003, 4.317475e-003, 1.800531e-002, 2.109614e-002, 2.282410e-003, -3.104635e-002, -4.664364e-002, -3.595913e-002, -2.956760e-002, -1.973906e-002, -1.549914e-002, -6.566159e-003, -8.146091e-003, -9.097423e-003, -8.405526e-003, -5.232156e-003, 9.936882e-003, 3.113138e-002, 2.576152e-002, 3.689493e-003, -6.771465e-003, -2.689651e-003, 7.370038e-003, 1.337545e-002, 2.368500e-002, 1.066855e-002, -7.322597e-004, 1.432643e-002, -2.551927e-005, 5.529408e-003, 2.224086e-002, -2.790556e-002, 4.083263e-002,


© ISO/IEC 2004 — All rights reserved

Copyright International Organization for Standardization
Provided by IHS under license with ISO
No reproduction or networking permitted without license from IHS
Not for Resale

4.399191e-002, -2.711069e-002, 1.679819e-002, -6.090066e-003, -1.142717e-003, -4.401638e-003, -6.942393e-003, 2.678756e-003, 1.419825e-002, 6.543771e-003, 1.788229e-003, 2.895999e-003, -5.535105e-003, -3.289732e-003, 1.306276e-002, 2.427435e-002, -5.157462e-003, -4.960319e-002, -7.147952e-002, -5.493312e-002, -2.069256e-002, 8.001093e-003, 2.506939e-002, 2.704161e-002, 2.748422e-002, 1.083552e-002, -6.990738e-003, -2.480441e-002, -4.285306e-002, -3.181014e-002, 6.194599e-003, 2.481607e-002, 1.062683e-002, -4.130041e-003, -1.751929e-003, -5.502709e-005, 1.398615e-002, 1.938382e-002, -1.249861e-003, -8.988744e-004, 1.735183e-002, 1.848783e-003, 2.417971e-003, 1.128693e-002, -3.811085e-002, 4.054246e-002, 3.745759e-002, -3.756353e-002, 1.734987e-002, -2.914595e-003, -2.397640e-003, -2.702841e-003, 4.328097e-003, -1.631134e-003, 5.592178e-003, -1.075779e-003, -1.136391e-002, -1.673964e-003, -1.025509e-002, -9.033777e-003, 9.589751e-003, 2.043939e-002, -8.320446e-003, -4.873704e-002, -5.321056e-002, -3.490199e-002, -1.608382e-002, -8.563364e-003, -7.239386e-003, -1.122415e-002, -7.347764e-003, -8.014631e-003, -1.284300e-002, -2.394905e-002, -4.113029e-002, -4.665617e-002, -2.282655e-002, 1.773281e-003, 8.291829e-005, -6.939305e-003, -8.016156e-003, -8.443522e-003, 3.272315e-003, 5.920570e-003, -1.775844e-002, -8.361494e-003, 1.100365e-002, -2.439965e-003, -3.163637e-003, 2.688202e-003, -4.090111e-002, 4.417181e-002, 3.141282e-002, -4.395133e-002, 1.139524e-002, -1.500449e-003, 2.337693e-003, 5.327814e-003, 1.592813e-002, 2.110165e-003, -7.795501e-003, -7.584529e-003, -1.591687e-002, -4.514070e-003, -6.499283e-003, -1.050396e-002, 1.385465e-003, 1.182313e-002, 8.734427e-004, -1.655768e-002, -2.305550e-002, -1.557412e-002, -9.593308e-003, -1.339100e-002, -1.238091e-002, -1.035000e-002, -3.982226e-003, 2.051992e-003, 5.184264e-003, -5.615422e-004, -1.480071e-002, -2.533524e-002, -1.841686e-002, -7.190847e-003, -5.616578e-003, -9.796742e-003, -1.414916e-002, -5.702590e-003, 1.583830e-003, -8.209804e-003, -2.238405e-002, -3.449474e-003, 1.544940e-003, -1.142376e-002, -1.071199e-002, 4.021368e-003, -4.200470e-002, 4.162996e-002, 2.576772e-002, -4.465245e-002, 2.123938e-002, 1.270735e-003, -4.574951e-003, 4.189918e-003, 1.918645e-002, 6.367888e-003, -1.853583e-002, -1.589042e-002, -1.008682e-002, -1.890567e-003, -6.329305e-003, -1.525642e-002, -1.873123e-002, -1.635931e-002, -1.149852e-002, -1.770846e-002, -1.975572e-002, -1.076150e-002, -1.060503e-003, 8.957124e-003, 1.990190e-002, 2.545599e-002, 2.249742e-002, 1.624622e-002, 1.036190e-002, -3.159604e-005, -1.531024e-002, -2.366931e-002, -1.709423e-002, -8.642661e-003, -9.202033e-003, -1.657817e-002, -1.301745e-002, -3.368649e-003, -4.669647e-003, -1.845629e-002, -1.516610e-002, 6.050608e-003, -5.817219e-003, -2.193827e-002, -1.779558e-002, 1.080078e-002, -3.250745e-002, 4.413747e-002, 2.217710e-002, -4.266438e-002, 3.641716e-002, 1.004755e-002, -4.561876e-003, -6.977657e-003, 7.113762e-003, -1.016311e-003, -1.256292e-002, -1.773223e-002, -6.136239e-004, 7.684876e-003, -2.573948e-003, -1.748176e-002, -2.976633e-002, -3.276326e-002, -2.548108e-002, -2.087500e-002, -2.628006e-002, -1.906138e-002, -4.466890e-003, 1.097313e-002, 2.386947e-002, 2.603679e-002, 1.841133e-002, 4.960261e-003, -9.761681e-003, -2.383496e-002, -3.166997e-002, -2.997061e-002, -1.597843e-002, -6.714133e-003, -5.876806e-003, -1.205612e-002, -6.008540e-003, -3.144429e-003, -2.064474e-002, -2.069205e-002, -5.436117e-003, 1.429761e-002, -3.779648e-003, -2.687387e-002, -1.703408e-002, 2.187617e-002, -1.667064e-002, 5.149918e-002, 2.524811e-002, -3.326906e-002, 1.403758e-002, 2.144080e-002, -1.520035e-003, -1.371303e-002, -5.037713e-003, -4.613725e-004, -7.231310e-004, -7.630834e-003, 3.142465e-004, 9.167326e-003, 3.881863e-003, -1.194016e-002, -2.566430e-002, -2.985474e-002, -2.786809e-002, -1.922222e-002, -2.232412e-002, -2.189134e-002, -9.672326e-003, 3.072629e-003, 1.121701e-002, 1.115238e-002, 3.269867e-003, -9.581304e-003, -2.057498e-002, -3.230498e-002, -2.996117e-002, -1.967551e-002, -2.655200e-003, 5.244262e-003, 4.737803e-003, 3.913691e-003, 3.255409e-003, -1.589837e-002, -2.426658e-002, -1.860264e-002, 7.624825e-003, 2.138007e-002, 2.415805e-003, -1.961215e-002, -8.954787e-003, 3.668353e-002, -5.924810e-003, 5.006825e-002, 1.977330e-002, -2.930162e-002, 1.820624e-002, 2.846557e-002, -3.937849e-004, -2.596068e-002, -1.766225e-002, 2.913326e-003, 7.495370e-003, -6.766505e-003, -8.160473e-003, 2.849391e-003, 5.887121e-003, -1.571188e-003, -1.525656e-002, -2.066008e-002, -1.596657e-002, -9.221246e-003, -8.561603e-003, -1.210900e-002, -7.615350e-003, 6.606891e-003, 1.345390e-002, 1.637666e-002, 1.117390e-002, -1.875242e-003, -1.091603e-002, -1.669410e-002, -1.207234e-002, 7.752710e-004, 1.349038e-002, 1.373736e-002, 1.186714e-002, 1.632346e-002, 7.858756e-004, -1.753107e-002, -1.095499e-002, 2.985340e-003, 1.251255e-002, 2.154106e-002, 1.200410e-002, -1.656787e-003, 1.613223e-003, 4.188507e-002, -8.458041e-003, 3.935267e-002, 2.727946e-002, -1.138883e-002, 2.343903e-002, 2.658012e-002, -1.100523e-002, -3.637165e-002, -1.897650e-002, 6.951094e-003, 6.302543e-003, -1.745417e-002, -1.320968e-002, -3.118319e-003, -1.131647e-003, -3.889191e-003, -1.221312e-002, -1.383092e-002, -2.293172e-003, 2.454022e-003, 4.467062e-003, 2.187782e-003, 2.404457e-003, 6.652747e-003, 9.885635e-003, 1.509369e-002, 1.583093e-002, 8.371532e-003, 2.364180e-003, -2.691443e-003, 2.399396e-003, 1.197978e-002, 1.253950e-002, 9.242533e-003, 1.612884e-002, 1.334514e-002, -7.929000e-003, -1.341587e-002, 1.336665e-002, 2.078086e-002, 1.393871e-002, 1.518882e-002, 1.048495e-002, 7.107568e-003, 1.111569e-002, 3.940252e-002, -2.237478e-002, 2.134432e-002, 2.584047e-002, -1.498057e-002, 1.942081e-002, 2.112637e-002, -2.292552e-003, -1.937556e-002, -7.336478e-004, 1.675808e-002, 4.718833e-003, -1.764642e-002, -1.329940e-002, -3.005324e-003, -4.116038e-003, -1.102556e-002, -1.540715e-002, -1.387347e-002,

© ISO/IEC 2004 — All rights reserved


Copyright International Organization for Standardization
Provided by IHS under license with ISO
No reproduction or networking permitted without license from IHS
Not for Resale

4.262260e-003, 8.649576e-003, 1.155297e-002, 7.427235e-003, 2.850801e-003, 2.735772e-003, -6.898307e-004, -4.760516e-004, 3.153292e-003, 5.240500e-003, 5.108471e-003, -1.756417e-003, 2.609064e-003, 2.941317e-003, -3.515433e-003, 1.170901e-003, 8.214342e-003, -1.272437e-003, -1.819184e-002, -1.500091e-002, 1.305727e-002, 7.461766e-003, -6.540406e-003, -3.013669e-003, -4.850124e-004, -4.538055e-003, 3.253680e-003, 2.773786e-002, -4.270326e-002, -2.745879e-003, 1.173649e-002, -2.241787e-002, 2.404141e-002, 4.252149e-002, 2.778254e-002, 1.243499e-002, 2.853388e-002, 3.237943e-002, 8.105993e-003, -4.460472e-003, 4.562716e-003, 1.321262e-002, 1.354303e-002, 9.152919e-003, -9.971164e-004, -1.408818e-002, 5.047451e-003, 1.411935e-002, 1.925171e-002, 1.351325e-002, 3.589676e-003, -3.599185e-003, -1.448621e-002, -1.817386e-002, -1.664432e-002, -1.489479e-002, -1.877572e-002, -2.873244e-002, -3.591199e-002, -3.463930e-002, -3.151380e-002, -1.059221e-002, -4.801977e-003, -9.022265e-003, -2.360018e-002, -1.892587e-002, 4.483185e-003, -1.454673e-002, -4.025993e-002, -2.640925e-002, -1.553409e-002, -7.680521e-003, 6.403431e-003, 2.529718e-002, -5.333195e-002, -2.215873e-002, 3.116428e-003, -2.046935e-002, 3.160911e-002, 5.481124e-002, 3.413896e-002, 1.742985e-002, 2.805890e-002, 2.376427e-002, 5.554554e-003, 1.262577e-002, 3.341926e-002, 3.160525e-002, 3.134571e-002, 2.809136e-002, 1.473260e-002, -6.650395e-003, -4.397586e-003, 4.858665e-003, 2.091172e-002, 1.760916e-002, 5.889955e-003, -5.863999e-003, -2.074315e-002, -2.920402e-002, -2.950201e-002, -2.777102e-002, -2.836105e-002, -3.583093e-002, -8.785722e-003, -7.164762e-003, 6.110649e-004, 1.741607e-002, 2.616749e-002, 2.625694e-002, 1.675348e-002, 1.294436e-002, 2.383705e-002, -2.966659e-003, -2.806996e-002, -9.545731e-003, 9.375022e-003, 1.709020e-002, 3.253474e-002, 5.950984e-002, -1.621613e-002, 5.856965e-003, -2.504922e-003, -2.811058e-002, -4.573686e-002, -5.609074e-003, -2.321486e-002, -3.835959e-002, -2.710680e-002, -1.669330e-002, -1.950604e-002, -8.307616e-003, 2.646798e-003, -7.229423e-004, 1.271434e-003, 1.247243e-002, 4.041899e-003, -2.085965e-002, -2.684050e-002, -2.434080e-002, -7.279273e-003, 3.141400e-003, 2.801674e-003, -2.906473e-003, -6.149335e-003, -6.089611e-003, -5.839931e-004, 3.389455e-003, 1.016745e-003, -4.320050e-003, -7.005759e-003, -4.491412e-003, 2.494321e-003, 7.347074e-003, 1.021082e-002, 1.518857e-002, 1.365398e-002, 1.062612e-002, 8.541464e-003, -1.012655e-002, -2.350400e-002, -1.303814e-002, 4.073953e-003, 4.444705e-003, 1.754697e-002, -3.386980e-002, -3.379877e-003, 2.094322e-002, 7.871670e-003, -2.302860e-002, -3.766361e-002, -7.761957e-004, -1.614322e-002, -2.680161e-002, -1.660019e-002, 1.412877e-003, -2.995745e-003, -1.714250e-002, -1.689108e-002, -1.780773e-002, -9.641871e-003, 4.226625e-003, 1.262314e-003, -1.723386e-002, -2.223772e-002, -2.614826e-002, -1.965917e-002, -9.366986e-003, -3.638865e-003, -4.511745e-003, -4.635005e-003, -2.532050e-003, -1.339932e-003, -1.286528e-003, -2.292965e-003, -7.102252e-003, -7.947421e-003, -5.210692e-003, -1.045466e-004, 9.794328e-004, -7.166072e-003, -8.450858e-004, -5.499702e-003, -1.811567e-002, -2.036239e-002, -2.365246e-002, -1.885688e-002, -1.099089e-002, 6.522990e-004, 4.758022e-003, 5.720756e-003, -5.662539e-002, -1.146743e-002, 2.741603e-002, 2.975517e-002, 4.256836e-003, -1.184707e-002, 2.972663e-002, 1.778938e-002, 7.276394e-003, 1.889693e-002, 2.416464e-002, 1.948998e-002, 5.327867e-003, -1.859441e-005, 1.467807e-003, 1.330187e-002, 2.171356e-002, 1.764992e-002, 1.448651e-003, 3.375660e-003, 1.009083e-002, 1.128212e-002, 1.346183e-002, 1.993163e-002, 2.430132e-002, 2.610389e-002, 2.734016e-002, 2.635502e-002, 2.239013e-002, 2.028352e-002, 1.447333e-002, 8.007080e-003, 1.024074e-002, 1.301483e-002, 1.215191e-002, 6.248112e-003, 1.270469e-002, 5.943051e-003, -1.062155e-002, -6.779390e-003, 5.122564e-003, -1.755117e-003, 1.447072e-003, 7.093145e-003, 2.784818e-002, 3.100606e-002, -4.081624e-002, -1.196063e-002, 2.608310e-002, 3.108676e-002, 1.224476e-002, 1.572679e-003, -6.050380e-003, -2.591760e-003, -8.318694e-003, -8.777877e-003, -4.068724e-004, 5.351457e-003, -1.024779e-003, -8.785339e-003, -8.217321e-004, 6.742161e-003, 1.315795e-002, 7.858374e-003, -6.178923e-003, -7.059372e-003, -2.944808e-003, -3.418763e-004, 1.182528e-003, 8.317539e-003, 1.246331e-002, 1.329382e-002, 1.310692e-002, 1.136539e-002, 7.956446e-003, 4.778946e-003, -2.002233e-003, -1.278038e-003, 3.756966e-003, 4.354003e-003, 8.592241e-003, 1.181295e-002, 2.088967e-002, 1.669903e-002, -7.913162e-003, 4.556802e-003, 3.016691e-002, 2.239924e-002, 1.281279e-002, 1.022504e-002, 2.198441e-002, 4.317411e-002, -1.018684e-002, -1.225246e-003, 2.129468e-002, 1.588445e-002, 1.288294e-002, 7.640350e-003, -1.756576e-003, 1.089750e-003, -6.811119e-003, -1.079222e-002, -2.940733e-003, 2.550683e-003, -7.720409e-003, -1.368774e-002, -6.441770e-003, 3.092948e-003, 5.865069e-005, -1.401100e-002, -2.733973e-002, -3.105687e-002, -3.524674e-002, -3.171808e-002, -2.923355e-002, -2.990533e-002, -2.869128e-002, -2.755489e-002, -2.702766e-002, -3.089980e-002, -3.765880e-002, -3.922377e-002, -3.983209e-002, -3.911471e-002, -3.451358e-002, -3.226002e-002, -2.911681e-002, -2.976014e-002, 8.678024e-003, 5.491925e-003, -7.335129e-003, 9.913098e-003, 2.813321e-002, 2.569559e-002, 7.930921e-003, 6.177858e-005, -2.403233e-003, 7.659964e-003, 2.085825e-002, 2.884105e-002, 4.173390e-002},
{-1.594862e-002, -1.544132e-002, -2.617094e-002, -5.974864e-003, 3.530105e-003, 5.716591e-003, 9.203700e-003, 9.752340e-003, 4.708799e-003, 4.155139e-003, -4.844143e-004, -4.365935e-003, -5.796313e-003, 1.903653e-003, 7.801751e-003, 9.403165e-003, 7.471574e-003, 1.007439e-002, 1.098902e-002, 1.378633e-002, 1.693689e-002, 1.732954e-002, 1.503617e-002, 1.072417e-002, 8.697310e-004, -3.175194e-003, -1.026926e-003, 2.921136e-003, 1.207384e-002, 1.697062e-002, 1.745544e-002, 1.432133e-002,


© ISO/IEC 2004 — All rights reserved

--`,,```,,,,````-`-`,,`,,`,`,,`---
Copyright International Organization for Standardization
Provided by IHS under license with ISO
No reproduction or networking permitted without license from IHS
Not for Resale

1.156892e-002, 1.715125e-002, 2.404515e-002, 1.752299e-002, 3.005857e-003, -9.876255e-003, -1.688151e-002, -1.526794e-002, -7.952018e-003, 6.710811e-003, 1.233499e-002, 2.345635e-003, -1.215341e-002, -2.618729e-002, -2.671576e-002, -8.110866e-003, -1.429388e-002, 7.614714e-004, 7.511350e-003, 4.697717e-003, 1.691027e-003, 2.293519e-003, 1.611311e-002, 1.947147e-002, 1.092740e-002, 9.011868e-003, 1.608801e-002, 1.455088e-002, 5.568532e-003, -3.773770e-003, -1.478418e-002, -1.643390e-002, -1.311810e-002, -5.468162e-003, 1.208363e-003, 3.383371e-003, 3.851759e-003, -2.045151e-003, -1.329048e-002, -2.617601e-002, -3.815236e-002, -3.935482e-002, -2.555537e-002, -7.759193e-003, 1.459461e-003, 3.535831e-003, -1.069635e-003, -4.180885e-003, 1.122407e-003, 1.113068e-002, 1.392633e-002, 8.078281e-003, 3.270779e-004, -6.214943e-003, -8.348815e-003, 6.761393e-003, 1.938842e-002, 7.231690e-003, -2.184066e-002, -3.808285e-002, -1.583979e-002, 1.154319e-002, 1.988394e-003, 8.144452e-003, 5.755323e-003, 1.963752e-003, -7.350984e-003, 3.387513e-003, 1.653301e-002, 1.432012e-002, 1.621972e-002, 2.201268e-002, 1.941655e-002, 5.425392e-003, -5.094377e-003, -1.313289e-002, -1.019250e-002, -1.851673e-003, 6.481236e-003, 1.560664e-002, 2.270851e-002, 3.325494e-002, 3.761694e-002, 3.568658e-002, 2.584456e-002, 9.228293e-003, -1.006017e-002, -2.512796e-002, -2.677227e-002, -1.578123e-002, 5.991679e-003, 2.378469e-002, 2.219113e-002, 4.747488e-003, -5.861104e-003, -5.097110e-003, 4.511742e-003, 7.889299e-003, 3.505343e-003, 4.781660e-003, -8.786802e-003, -8.136301e-003, 8.620665e-003, 8.277605e-003, -2.325585e-002, -3.622090e-002, -3.027073e-003, 2.233081e-002, 7.308199e-003, 7.330008e-003, 5.610526e-003, 1.315918e-005, 1.872316e-003, 7.926451e-003, 1.195103e-002, 1.440747e-002, 2.117529e-002, 1.737670e-002, 1.032207e-002, 2.127633e-003, -2.870577e-004, 1.736799e-003, 5.538054e-003, 1.197572e-002, 2.052564e-002, 2.730398e-002, 2.894233e-002, 3.381928e-002, 3.763156e-002, 3.649817e-002, 2.930796e-002, 1.719104e-002, 1.811480e-003, -1.014756e-002, -1.614363e-002, -1.393390e-002, -6.548621e-003, 1.214715e-002, 3.438616e-002, 3.160915e-002, 5.894517e-003, -5.744015e-003, -6.764648e-003, -2.584615e-003, -3.985586e-003, 4.885297e-003, 6.082372e-003, -8.383457e-003, -5.502009e-004, 8.887985e-003, -1.506636e-002, -3.024405e-002, -2.036818e-002, 2.998437e-003, -1.350658e-002, -1.616212e-002, -1.169411e-002, -1.042497e-002, -1.447592e-002, -1.173702e-002, -7.664253e-003, 7.874368e-005, 4.356484e-003, 2.944711e-003, 3.792046e-003, 1.461277e-003, -2.618508e-003, -5.431763e-004, 6.705412e-004, 7.403419e-005, 1.188899e-003, 2.946766e-003, 3.880303e-003, 9.476850e-003, 1.397572e-002, 1.620558e-002, 1.313395e-002, 5.785967e-003, -4.052434e-003, -1.242130e-002, -1.214394e-002, -6.858977e-003, -3.301162e-003, -2.029284e-003, 9.622175e-003, 3.134878e-002, 2.960846e-002, 7.505768e-003, -1.266551e-002, -2.078772e-002, -1.414802e-002, -1.448747e-002, 6.631503e-003, -4.518239e-003, -6.060903e-004, 6.869744e-003, -1.888532e-003, -1.492523e-002, -1.505007e-002, 1.752063e-003, -2.030943e-002, -2.061532e-002, -1.947400e-003, -1.195393e-003, -2.918862e-003, -9.800858e-003, -9.939253e-003, -4.259634e-003, 4.007101e-003, 1.179078e-002, 1.783736e-002, 1.242499e-002, 8.993050e-003, 7.676065e-003, 2.687425e-003, -8.262739e-004, -1.130599e-003, 1.794142e-003, 1.376705e-003, 5.157668e-003, 9.409792e-003, 1.168170e-002, 1.053171e-002, 8.053593e-003, 3.568821e-004, -4.968356e-003, -5.743830e-003, -4.314971e-003, 3.101134e-003, 8.269799e-003, 1.142166e-002, 2.095910e-002, 2.767029e-002, 2.541648e-002, 5.119805e-004, -5.864520e-003, -3.685875e-003, -8.036850e-003, 1.049233e-002, 1.477061e-002, 1.308841e-002, 7.702345e-003, 6.181953e-003, 3.793056e-003, -1.460579e-002, 2.210058e-003, -2.222197e-002, -2.228488e-002, 6.271497e-004, 2.002778e-003, -8.131098e-003, -1.260968e-002, -1.030982e-002, -2.455876e-003, 4.272590e-003, 1.264696e-002, 1.977352e-002, 1.725992e-002, 1.435942e-002, 9.821648e-003, 9.062732e-003, 1.199506e-002, 1.311609e-002, 1.227305e-002, 1.032427e-002, 1.337921e-002, 1.390611e-002, 9.004794e-003, 7.440848e-003, 2.782846e-003, -8.359047e-003, -8.975088e-003, -5.232007e-003, -4.528304e-003, -3.960974e-003, 7.902942e-003, 1.741909e-002, 2.218266e-002, 1.722849e-002, 1.174923e-002, 4.852213e-003, -2.576710e-003, -4.825901e-004, -4.261944e-003, 6.787850e-003, 1.671443e-002, 6.707833e-003, -1.969771e-003, -2.214468e-003, 1.096861e-002, -1.151649e-002, 8.834733e-003, -1.798623e-002, -1.189291e-002, 8.022072e-003, 2.017917e-004, -1.166553e-002, 6.947458e-004, 1.883413e-003, -2.953474e-003, -2.893927e-003, 7.617556e-003, 1.233873e-002, 1.427455e-002, 7.772512e-003, 7.528439e-003, 1.383462e-002, 1.675633e-002, 2.070676e-002, 2.736630e-002, 3.294350e-002, 3.241190e-002, 2.600163e-002, 1.281329e-002, 2.818707e-003, -7.134494e-003, -1.899817e-002, -1.848339e-002, -9.004985e-003, -3.892442e-003, -4.445396e-003, 1.211072e-003, 1.600952e-002, 2.828038e-002, 2.027405e-002, 8.333173e-003, -4.654590e-003, -7.014022e-003, -2.141487e-003, 2.400400e-004, 2.232368e-003, 1.639449e-002, 1.000879e-002, -9.848935e-003, -1.297965e-002, 1.067777e-002, -7.638929e-003, 1.469879e-002, -9.136940e-003, 3.130071e-004, 1.378442e-002, -4.419437e-003, -7.572506e-003, 1.643910e-002, 1.108127e-003, -8.978086e-003, -4.030703e-003, 4.426426e-003, 3.733531e-003, 4.311300e-004, -8.198982e-003, -2.167531e-003, 6.481967e-003, 1.169108e-002, 2.073833e-002, 3.321405e-002, 4.255372e-002, 3.914548e-002, 3.396023e-002, 1.678900e-002, -1.390773e-003, -1.204463e-002, -2.282653e-002, -1.893644e-002, -1.273900e-002, -8.031985e-003, -3.800035e-003, 6.216669e-004, 1.102530e-002, 2.251927e-002, 2.558832e-002, 1.253706e-002, -6.382814e-003, -1.435106e-002, -6.323589e-003, 7.466942e-003, 6.619473e-003, 1.336169e-002, 1.246174e-002, -1.717352e-002, -1.627059e-002, 1.021439e-002, -8.488385e-003, 1.954711e-002,

© ISO/IEC 2004 — All rights reserved


Copyright International Organization for Standardization
Provided by IHS under license with ISO
No reproduction or networking permitted without license from IHS
Not for Resale

4.402379e-004, 1.103924e-002, 1.680809e-002, -1.491074e-003, 8.808500e-003, 2.169150e-002, -6.031746e-003, -1.159221e-002, 2.599086e-003, 6.068578e-003, -7.456713e-003, -1.615417e-002, -2.075368e-002, -1.704462e-002, -9.542573e-003, 5.117559e-003, 1.999858e-002, 3.438420e-002, 4.204486e-002, 4.320348e-002, 3.827077e-002, 2.167656e-002, 2.816349e-003, -5.381542e-003, -1.027434e-002, -9.020602e-003, -6.302694e-003, -1.774640e-003, 2.051417e-003, 3.177716e-003, 4.085417e-003, 1.064337e-002, 1.847639e-002, 1.811781e-002, 2.427344e-003, -1.329953e-002, -1.576595e-002, 2.864805e-003, 1.111429e-002, 5.376811e-003, 7.064895e-003, -1.843415e-002, 5.078979e-004, 4.849767e-003, -7.880599e-003, 1.174724e-002, 6.733273e-003, 7.049627e-003, 1.531952e-002, 3.280325e-003, 2.349324e-002, 2.186303e-002, -8.549252e-003, 4.573485e-004, 1.201545e-002, 4.771876e-003, -9.085181e-003, -2.136388e-002, -2.166451e-002, -1.690758e-002, -5.537662e-003, 1.029062e-002, 2.546535e-002, 3.613938e-002, 4.359620e-002, 4.447192e-002, 3.836592e-002, 2.447796e-002, 1.218400e-002, 1.115039e-002, 9.066110e-003, 1.344471e-002, 1.871034e-002, 2.299325e-002, 2.277589e-002, 2.241190e-002, 1.106496e-002, 6.347588e-003, 1.286753e-002, 2.225069e-002, 1.464910e-002, -6.696382e-003, -1.567791e-002, 3.401133e-004, 9.375683e-003, 2.692275e-003, 2.572275e-003, -1.829698e-002, -3.781464e-003, 4.748473e-004, -6.138500e-003, 2.071792e-002, -1.289232e-003, -3.023262e-003, 7.211363e-003, 2.048673e-003, 2.978624e-002, 1.661966e-002, 5.914352e-004, 1.612547e-002, 1.814407e-002, 7.509096e-003, 2.077276e-004, -1.174969e-002, -9.208806e-003, -5.104233e-003, 5.627810e-003, 1.936532e-002, 2.971526e-002, 4.035432e-002, 4.703220e-002, 4.489650e-002, 3.514440e-002, 2.437039e-002, 1.656112e-002, 1.995208e-002, 2.465277e-002, 3.199322e-002, 4.302187e-002, 4.989087e-002, 5.145514e-002, 4.997815e-002, 3.622042e-002, 1.633208e-002, 8.955750e-003, 1.747073e-002, 2.226733e-002, 3.309705e-003, -1.227572e-002, -5.780105e-004, 5.207914e-003, -4.336407e-004, 1.413129e-003, -1.665187e-002, -4.538568e-003, -2.966319e-004, 2.593312e-003, 2.168824e-002, -8.383569e-003, 7.781316e-003, 1.898896e-003, -5.337725e-003, 2.547461e-002, 1.245149e-002, 7.656257e-003, 1.930892e-002, 2.322897e-002, 1.963871e-002, 1.687733e-002, 9.676205e-003, 8.309000e-003, 8.913893e-003, 1.367101e-002, 2.117484e-002, 2.902158e-002, 3.905286e-002, 4.317421e-002, 3.828523e-002, 2.076950e-002, 1.187734e-002, 5.779839e-003, 1.060594e-002, 2.468218e-002, 3.359052e-002, 4.625909e-002, 5.657464e-002, 6.317611e-002, 6.304574e-002, 5.104849e-002, 3.117408e-002, 8.176229e-003, 5.566490e-003, 1.842445e-002, 1.288861e-002, -4.095928e-003, 2.406559e-003, 2.157488e-003, -1.024066e-002, -5.617575e-003, -1.747001e-002, 1.064655e-003, -1.704232e-003, 1.273277e-002, 1.583837e-002, -9.428023e-003, 8.827388e-003, -9.669551e-003, -2.073124e-002, 1.624978e-002, 1.294967e-002, 1.030180e-002, 1.796132e-002, 2.960098e-002, 3.795708e-002, 3.460686e-002, 2.444657e-002, 2.172617e-002, 1.836088e-002, 2.105514e-002, 2.162656e-002, 2.460581e-002, 3.000605e-002, 2.987165e-002, 1.925161e-002, 8.995919e-004, -1.150505e-002, -1.654700e-002, -9.650812e-003, 4.034280e-003, 1.445387e-002, 2.568574e-002, 3.501703e-002, 4.256891e-002, 5.043453e-002, 4.820266e-002, 3.668491e-002, 1.303897e-002, -3.473509e-003, 9.954821e-003, 1.396930e-002, -2.341183e-003, 1.021457e-002, 1.079652e-002, -1.425465e-002, -1.053505e-002, -1.441494e-002, 7.153036e-003, -8.721060e-003, 2.171043e-002, 1.095388e-002, -4.983714e-003, 1.149703e-002, -1.566839e-002, -3.289530e-002, 1.061020e-002, 1.221572e-002, 6.035707e-003, 1.161354e-002, 3.362137e-002, 4.886720e-002, 4.420008e-002, 3.444912e-002, 3.033180e-002, 2.285641e-002, 2.238730e-002, 1.790478e-002, 1.427117e-002, 1.374266e-002, 1.409851e-002, 2.149899e-003, -1.305311e-002, -2.255383e-002, -2.833550e-002, -2.329479e-002, -1.370437e-002, -8.981776e-003, -1.873291e-003, 5.084052e-003, 1.528020e-002, 2.413776e-002, 3.472097e-002, 3.160981e-002, 1.744124e-002, -1.364742e-003, 3.735817e-003, 1.032273e-002, -4.786410e-003, 1.287835e-002, 2.064881e-002, -1.140709e-002, -1.225914e-002, -1.080205e-002, 1.978107e-002, -6.395947e-003, 1.639643e-002, 7.154803e-003, 3.266610e-003, 1.431186e-002, -1.574638e-002, -2.975689e-002, 1.139398e-002, 7.042991e-003, -4.087729e-003, 4.731282e-003, 3.222934e-002, 4.968397e-002, 4.799491e-002, 4.001569e-002, 2.936137e-002, 1.909198e-002, 1.483710e-002, 5.700371e-003, -1.609472e-003, -5.113041e-003, -3.960223e-003, -8.430808e-003, -1.891810e-002, -2.449727e-002, -2.536437e-002, -2.174638e-002, -1.813534e-002, -1.807151e-002, -1.613075e-002, -1.281525e-002, -6.903059e-003, 2.522339e-003, 1.692151e-002, 2.412951e-002, 2.045031e-002, -7.349577e-005, 3.614871e-003, 8.740602e-003, -4.476827e-003, 6.660079e-003, 2.030443e-002, -3.342490e-003, -4.294325e-003, -7.228021e-004, 2.864834e-002, -6.155973e-003, 1.134569e-002, 3.824486e-003, 1.178769e-002, 1.144721e-002, -1.449936e-002, -1.731532e-002, 1.000237e-002, 3.346677e-003, -9.818209e-003, 1.335146e-003, 3.075627e-002, 4.945668e-002, 5.132383e-002, 4.620695e-002, 4.043733e-002, 2.937810e-002, 2.067869e-002, 5.422719e-003, -1.050779e-002, -1.727199e-002, -1.549205e-002, -1.532254e-002, -1.747608e-002, -1.906371e-002, -1.558347e-002, -6.868725e-003, -3.154082e-003, -1.643995e-003, 1.499568e-003, 5.043019e-003, 3.629252e-003, 7.123138e-003, 1.618118e-002, 2.737496e-002, 2.950881e-002, 8.531074e-003, 5.995966e-003, 9.882928e-003, -2.334913e-003, 2.490357e-003, 6.755095e-003, -2.844620e-003, 7.759127e-003, 7.257894e-003, 2.547881e-002, -5.618441e-003, 5.821186e-003, -3.886451e-003, 1.015781e-002, 7.149447e-003, -9.897025e-003, -4.053224e-003, 5.622673e-003, -5.841117e-003, -1.270822e-002, 5.118113e-003, 3.734817e-002, 5.665645e-002, 5.471279e-002, 4.456531e-002, 4.008208e-002, 3.396172e-002, 2.726790e-002, 1.660663e-002, -


© ISO/IEC 2004 — All rights reserved

Copyright International Organization for Standardization
Provided by IHS under license with ISO
No reproduction or networking permitted without license from IHS
Not for Resale

1.080276e-004, -9.549554e-003, -1.519952e-002, -1.505642e-002, -1.215887e-002, -9.939085e-003, -2.843552e-004, 1.686829e-002, 3.330511e-002, 4.198497e-002, 4.244466e-002, 3.493099e-002, 1.698176e-002, 8.146891e-003, 1.039874e-002, 2.741227e-002, 4.726453e-002, 3.652945e-002, 2.005915e-002, 1.554577e-002, 3.028581e-003, 3.412754e-003, -5.141457e-003, -1.033249e-002, 1.270601e-002, 1.453734e-002, 1.915401e-002, -6.888985e-003, -1.506573e-003, -9.409013e-003, 5.808872e-003, 2.096880e-003, -2.570843e-003, 8.604216e-003, 2.126612e-003, -1.500404e-002, -8.571029e-003, 2.055467e-002, 5.271632e-002, 5.958049e-002, 3.857005e-002, 2.128566e-002, 2.271057e-002, 2.404990e-002, 2.213102e-002, 1.416719e-002, 8.031393e-003, -1.881071e-003, -1.219203e-002, -1.601880e-002, -1.310667e-002, -6.889517e-003, 9.020548e-003, 2.986379e-002, 5.349588e-002, 5.395143e-002, 3.087386e-002, 4.894089e-003, -1.691294e-002, -2.607453e-002, -1.511264e-002, 1.117700e-002, 5.063621e-002, 6.304230e-002, 4.165102e-002, 2.663066e-002, 1.465780e-002, 1.139795e-002, -8.051911e-003, -1.812991e-002, 1.012178e-002, 1.313247e-002, 1.209474e-002, -1.113853e-002, -1.005495e-002, -1.370291e-002, 3.586292e-003, -5.092791e-003, -3.068258e-005, 1.928108e-002, 1.045981e-003, -2.045240e-002, 6.942930e-003, 4.180248e-002, 5.418296e-002, 3.277042e-002, 2.025447e-002, 2.181592e-002, 3.172496e-002, 4.367952e-002, 4.902720e-002, 4.001440e-002, 3.322650e-002, 1.676420e-002, -7.549573e-003, -2.610038e-002, -2.875171e-002, -1.887788e-002, 2.197988e-004, 2.444183e-002, 4.375543e-002, 3.586197e-002, 1.738267e-002, 1.493663e-002, 1.721547e-002, 1.444798e-002, 3.978265e-003, -3.995049e-003, 1.613963e-002, 5.799865e-002, 6.074042e-002, 3.693805e-002, 2.484190e-002, 2.190099e-002, -4.077289e-003, -1.883320e-002, 8.229905e-003, -9.365896e-004, 4.207054e-003, -8.960924e-003, -1.895622e-002, -1.312053e-002, 8.704401e-003, -1.021218e-002, 6.204181e-004, 2.441610e-002, 2.405552e-003, -1.886911e-002, 2.162536e-002, 3.407495e-002, 2.689772e-003, -2.363961e-002, -1.365626e-002, 6.476302e-003, 2.306345e-002, 4.286260e-002, 5.133157e-002, 5.756031e-002, 5.820491e-002, 4.400451e-002, 9.085413e-003, -3.176425e-002, -4.500133e-002, -3.441591e-002, -1.311028e-002, 1.322052e-002, 2.732572e-002, 3.259218e-002, 3.978900e-002, 4.132810e-002, 3.800394e-002, 2.129601e-002, -4.522154e-003, -3.352618e-002, -4.487952e-002, -1.411952e-002, 2.481577e-002, 3.038842e-002, 2.608554e-002, 2.963809e-002, 3.402724e-003, -1.251525e-002, 7.325305e-003, -1.556813e-002, -4.842417e-003, -4.160044e-003, -3.908919e-002, -1.488434e-002, 4.686060e-003, -1.134884e-002, -3.987641e-003, 2.241917e-002, 9.659120e-003, -7.862429e-003, 2.276357e-002, 5.223851e-004, -4.863934e-002, -4.317971e-002, -4.967676e-003, 1.594241e-002, 1.481532e-002, 5.341297e-003, 8.986016e-003, 2.029649e-002, 3.361980e-002, 3.533040e-002, 8.637637e-003, -3.254156e-002, -5.166171e-002, -4.922820e-002, -2.426676e-002, 7.503225e-004, 6.244058e-003, 9.473112e-003, 7.555084e-003, -4.621946e-003, -1.655741e-002, -2.310996e-002, -1.849621e-002, -2.259603e-002, -4.758275e-002, -6.725706e-002, -4.498206e-002, -4.282047e-003, 1.277401e-002, 2.686118e-002, 8.568318e-003, -1.461391e-003, 9.674401e-003, -2.318159e-002, -4.585097e-003, 4.196303e-004, -3.972250e-002, -1.195424e-002, 2.528914e-003, -1.672648e-002, -1.632092e-002, 7.526639e-003, 1.850493e-003, -1.248897e-002, 2.434985e-003, -3.189843e-002, -6.600157e-002, -6.237708e-003, 6.477036e-002, 7.041839e-002, 4.115357e-002, 1.242515e-002, -6.034120e-003, 5.956215e-003, 3.149207e-002, 2.583548e-002, 4.253777e-003, -1.424448e-002, -3.188053e-002, -3.633998e-002, -1.382557e-002, 1.201991e-003, -1.484258e-003, 1.254482e-002, 2.036365e-002, 7.644868e-003, 1.210628e-002, 2.778053e-002, 4.062702e-002, 5.193905e-002, 3.842150e-002, -2.782734e-002, -5.954366e-002, -2.074418e-002, 1.992532e-004, 1.268104e-002, 1.730057e-002, 1.602098e-002, 1.587116e-002, -2.053277e-002, -3.235089e-003, 2.319715e-002, -3.511982e-002, -9.073107e-003, -2.071117e-003, -2.301100e-002, -1.563291e-002, -8.562819e-003, -1.598578e-002, -2.934392e-002, -2.011978e-002, -3.748076e-002, -4.339251e-002, 2.535994e-002, 7.959543e-002, 3.945443e-002, 2.185774e-003, -5.005779e-002, -5.443203e-002, -3.339895e-002, 1.434772e-003, 8.798261e-003, 4.120631e-003, -6.914141e-004, -3.395319e-002, -3.703128e-002, -6.366858e-003, 9.794455e-003, 1.570226e-003, 5.553485e-003, -7.821555e-003, -1.669242e-002, -2.445209e-002, 1.152454e-002, 1.817976e-002, 4.906212e-002, 8.783940e-002, 2.405397e-002, -4.015615e-002, -2.437267e-002, -7.588516e-003, -2.196452e-003, 2.141792e-002, 1.694161e-002, 1.010683e-002, -1.554327e-002, 5.262725e-003, 1.553927e-002, -5.517658e-003, 6.764447e-004, 3.595525e-003, -1.050636e-002, -1.795597e-003, -1.090717e-002, -1.208673e-002, -1.180031e-002, -1.961826e-002, -3.977324e-002, -2.946575e-002, 1.589252e-002, 2.663185e-002, 2.289441e-002, 6.695287e-002, 4.784288e-002, 1.004398e-002, -5.884883e-003, -7.019886e-003, -5.608713e-003, 1.365095e-002, 1.048469e-002, -3.394961e-002, -3.951403e-002, -8.647815e-003, 1.696823e-002, 5.925529e-003, -1.503703e-002, -1.256248e-002, 9.133827e-003, 2.457815e-002, 6.766474e-002, 5.256810e-002, 2.440088e-002, 4.867212e-002, 2.630691e-002, -2.604387e-002, -2.947026e-002, -2.284395e-002, -2.139623e-002, 1.789568e-002, 8.666491e-003, 1.588639e-003, -6.002998e-003, 9.430184e-003, 7.353147e-003, 1.519004e-003, 8.970596e-003, 9.987120e-003, 1.536599e-003, 9.758028e-003, -7.900797e-003, -7.677751e-003, 3.126218e-003, -6.553166e-003, -2.108806e-002, -2.046772e-002, -1.036409e-002, -2.832314e-003, 2.576547e-002, 5.518061e-002, 4.719610e-002, 1.002582e-003, -2.395328e-002, -3.268381e-002, -1.566605e-002, 2.345715e-002, 1.294501e-002, -5.009794e-003, -7.347095e-003, -7.746627e-003, 1.599616e-002, -1.197984e-003, -4.833735e-002, -5.155517e-002, -2.364999e-002, 1.189528e-002, 4.490786e-002, 4.160039e-002, 3.077655e-003, -

© ISO/IEC 2004 — All rights reserved
--`,,```,,,,````-`-`,,`,,`,`,,`---


Copyright International Organization for Standardization
Provided by IHS under license with ISO
No reproduction or networking permitted without license from IHS
Not for Resale

3.101508e-003, 6.370746e-003, -1.293464e-002, -1.674883e-002, -3.337764e-002, -4.297216e-002, 1.826275e-003, -5.769601e-003, 2.299572e-004, 3.044261e-003, -1.999353e-003, 4.843938e-003, 2.660339e-003, 6.355160e-003, 9.768856e-003, 7.904169e-003, 1.679137e-002, -1.156256e-002, -1.522403e-002, 1.354477e-002, 1.045012e-002, -3.615596e-003, -1.107998e-002, -1.769929e-002, -1.837900e-002, -6.607886e-003, -9.070745e-005, -1.499355e-002, -4.020981e-002, -4.882139e-002, -3.386994e-002, 5.326105e-003, 2.626995e-002, 2.026213e-002, 3.126204e-002, 2.651304e-002, 1.122579e-002, 1.645375e-002, 1.348083e-002, -4.605020e-002, -7.286081e-002, -6.233377e-002, -3.621074e-002, -7.172038e-003, -5.894813e-004, -1.257915e-002, -4.753646e-003, 1.068478e-002, 1.671355e-002, -7.032267e-003, -3.044448e-002, -4.494562e-002, -6.014095e-003, -1.927672e-002, 3.871106e-003, 1.345970e-002, -1.167118e-002, -1.129786e-002, 6.242677e-003, 5.121539e-003, 6.297107e-003, 1.841347e-003, 1.345178e-002, -1.132970e-002, -1.833811e-002, 1.788291e-002, 2.158093e-002, 1.619747e-004, -1.109497e-002, -1.920756e-002, -2.362949e-002, -1.766869e-002, -2.131777e-002, -3.554692e-002, -4.824056e-002, -4.065618e-002, -4.587365e-003, 2.661416e-002, 1.834724e-002, 3.811783e-002, 5.665147e-002, 5.085484e-002, 3.649223e-002, 2.023293e-002, 2.817274e-002, -4.104256e-003, -5.629164e-002, -7.699912e-002, -6.208238e-002, -3.331353e-002, -1.783522e-002, -1.227133e-002, -5.687039e-004, 1.676778e-002, 2.972274e-002, 1.869787e-003, -1.979197e-002, -3.774684e-002, -8.825213e-003, -2.787677e-002, 8.240810e-003, 1.697155e-002, -1.200335e-002, -1.500592e-002, 2.770086e-003, 2.855720e-003, -5.036906e-004, -8.386126e-003, 6.370507e-003, -1.442305e-002, -2.222842e-002, 7.191802e-003, 1.982316e-002, 2.594100e-003, -1.655260e-002, -3.014480e-002, -3.023759e-002, -2.498748e-002, -3.043983e-002, -3.882767e-002, -3.874159e-002, -1.853570e-002, 1.044784e-002, 1.459895e-002, 1.803055e-002, 5.421417e-002, 7.221167e-002, 6.503465e-002, 4.800663e-002, 2.586573e-002, 2.038354e-002, 1.928755e-002, -1.843498e-002, -5.525522e-002, -6.140433e-002, -4.185437e-002, -2.343310e-002, -1.031448e-002, 3.360176e-003, 1.737194e-002, 2.188774e-002, 6.162475e-003, -7.716765e-003, -2.414543e-002, -9.379664e-003, -2.782079e-002, 1.138778e-002, 8.939382e-003, -2.565270e-002, 2.703703e-002, 1.963662e-004, 5.702073e-004, -2.354020e-003, -1.092860e-002, 2.279836e-003, -1.664021e-002, -1.951184e-002, -2.240480e-003, 7.601117e-003, -3.799837e-003, -1.979296e-002, -3.720740e-002, -4.147448e-002, -3.437534e-002, -3.226067e-002, -2.709470e-002, -1.783272e-002, -6.053435e-003, -1.497853e-003, -2.167310e-003, 1.664081e-002, 4.005381e-002, 6.045275e-002, 5.318888e-002, 3.479428e-002, 1.800847e-002, 6.014234e-003, 1.281134e-002, -1.571868e-003, -2.612983e-002, -3.980024e-002, -3.375929e-002, -2.268778e-002, -1.248990e-002, -4.071988e-003, 6.947855e-003, 7.417793e-003, 2.279946e-003, 2.420688e-003, -3.676594e-003, -4.890063e-003, -1.979851e-002, 8.920994e-003, -3.657814e-004, -2.602584e-002, 3.931578e-002, 1.664975e-002, -1.201777e-002, -9.878195e-003, -1.068451e-002, 4.126266e-003, -7.155389e-003, -1.265383e-002, -1.129517e-002, -6.326942e-003, -8.112325e-003, -2.846247e-002, -4.433415e-002, -4.189419e-002, -2.854436e-002, -2.125658e-002, -1.868050e-002, -1.880821e-002, -2.059952e-002, -2.602925e-002, -2.281100e-002, -6.233159e-003, -6.986441e-004, 2.094718e-002, 1.233693e-002, -6.565321e-003, -1.782882e-002, -1.296670e-002, -1.306232e-002, -1.357351e-002, -1.880423e-002, -2.921503e-002, -3.394573e-002, -2.991512e-002, -2.840281e-002, -2.254527e-002, -1.275227e-002, -9.930769e-003, -2.396733e-003, 1.133076e-002, 1.271613e-002, -6.619184e-005, -9.805956e-003, 5.666636e-003, -1.501906e-002, -1.560161e-002, 4.925871e-002, 1.383079e-002, -2.297928e-002, -1.364706e-002, -8.787339e-003, 8.171401e-003, 2.301954e-003, -2.058794e-003, -1.060381e-002, -1.370111e-002, -8.677819e-003, -2.259274e-002, -4.149328e-002, -4.669908e-002, -3.666865e-002, -3.441963e-002, -3.250697e-002, -3.326414e-002, -3.882261e-002, -4.766696e-002, -3.066936e-002, -3.246011e-002, -4.338957e-002, -2.273752e-002, -2.600153e-002, -4.601852e-002, -5.436276e-002, -3.567238e-002, -3.292577e-002, -2.953991e-002, -1.827593e-002, -2.489195e-002, -3.519592e-002, -3.803386e-002, -3.762193e-002, -2.880331e-002, -1.808076e-002, -1.518318e-002, -6.349968e-003, 1.217617e-002, 1.373295e-002, -1.569999e-003, -3.836357e-003, 1.070565e-003, -1.644173e-002, -6.710729e-003, 1.454009e-003, 1.096506e-002, -3.001887e-002, -1.467905e-002, -7.515658e-003, 8.387131e-003, 5.288964e-003, 6.417683e-003, -3.540794e-003, -1.709361e-002, -6.084467e-003, -1.297257e-002, -2.841474e-002, -3.527263e-002, -2.805667e-002, -2.243752e-002, -1.787720e-002, -1.975128e-002, -4.590060e-002, -5.554341e-002, -2.487505e-002, -3.368969e-002, -4.618303e-002, -1.687447e-002, -1.790553e-002, -4.141773e-002, -5.451069e-002, -3.966276e-002, -4.013394e-002, -3.239642e-002, -9.735925e-003, -4.346678e-004, -9.532512e-003, -2.012286e-002, -2.179320e-002, -1.724835e-002, -9.614924e-003, -1.353077e-002, -3.277291e-003, 1.055772e-002, 1.516344e-002, -4.672775e-003, -4.258545e-003, 1.491682e-003, -1.290078e-002, -9.436250e-003, -6.354686e-003, 4.852345e-003, -4.015356e-002, -1.630798e-002, -4.369604e-003, 5.382460e-003, 1.960631e-003, 1.425455e-002, 9.535439e-003, -1.041294e-002, -4.954664e-003, -1.557859e-003, -1.298625e-002, -1.928183e-002, -1.015340e-002, -1.854997e-003, 7.977659e-004, -1.136509e-002, -4.684070e-002, -5.576603e-002, -3.891775e-002, -4.554390e-002, -3.914616e-002, -8.443486e-003, -7.435562e-003, -3.329369e-002, -4.544717e-002, -4.717539e-002, -4.839836e-002, -3.905516e-002, -7.201692e-003, 1.968063e-002, 2.053035e-002, 1.064451e-002, 2.891159e-003, 6.813223e-004, -5.592947e-004, -9.184005e-003, -2.119188e-003, 8.871262e-003, 1.761860e-002, -5.467208e-003, -4.462107e-003, 4.880329e-003, -8.213451e-003, -3.939259e-003, -7.372908e-003, 8.040684e-004, -4.545260e-002, -1.389001e-002, 5.054820e-003, -


© ISO/IEC 2004 — All rights reserved

Copyright International Organization for Standardization
Provided by IHS under license with ISO
No reproduction or networking permitted without license from IHS
Not for Resale

3.122847e-004, -8.564868e-003, 1.684738e-002, 2.111192e-002, -3.819486e-004, -6.627504e-003, 6.391818e-003, 2.286190e-004, -7.077429e-003, 4.862244e-003, 1.395631e-002, 1.310850e-002, -4.524628e-003, -2.952367e-002, -3.534888e-002, -4.493752e-002, -6.548213e-002, -4.687990e-002, -2.657683e-002, -4.098539e-002, -4.512670e-002, -5.145396e-002, -3.880927e-002, -3.269786e-002, -3.701612e-002, -1.757397e-002, 1.910755e-002, 3.280631e-002, 2.751234e-002, 1.555924e-002, 9.029941e-003, 3.711069e-003, -6.814531e-003, -4.876958e-003, 3.966281e-004, 1.265311e-003, -5.459516e-003, 5.132720e-003, 7.985329e-003, -5.934532e-003, 2.219779e-003, -1.155147e-002, 7.707603e-004, -4.568542e-002, -1.320582e-002, 1.716660e-002, 3.250543e-003, -1.690936e-002, 4.443347e-003, 2.529432e-002, 8.307409e-003, -2.368670e-003, 8.854915e-003, 1.033218e-002, -1.733777e-003, 8.346063e-003, 1.698024e-002, 1.329677e-002, 1.391701e-003, -5.569249e-004, 3.171035e-003, -1.171501e-002, -2.662069e-002, -2.781693e-002, -3.691904e-002, -5.366729e-002, -4.106625e-002, -3.435699e-002, -1.932308e-002, -1.480845e-002, -2.529968e-002, -2.379063e-002, 4.937442e-003, 3.231906e-002, 3.486981e-002, 2.035403e-002, 1.224865e-002, 7.719145e-003, -6.950887e-003, -6.053469e-003, -9.243402e-003, -1.619234e-002, -5.375734e-003, 1.821572e-002, 7.521582e-003, 7.914699e-004, 3.497071e-003, -1.871056e-002, 5.540358e-003, -3.494886e-002, -3.325691e-003, 2.971868e-002, 7.030114e-003, -2.095846e-002, -4.530568e-003, 2.389279e-002, 1.415381e-002, 7.209936e-004, 9.057080e-003, 1.612894e-002, 2.051285e-003, 4.585254e-003, 7.325976e-003, 8.112097e-003, 8.493777e-003, 1.673993e-002, 1.475927e-002, 5.136410e-003, -9.600466e-003, -2.548831e-002, -4.336813e-002, -5.706096e-002, -3.397488e-002, -2.211668e-002, -7.237515e-003, -5.766143e-003, -1.515250e-002, -2.053019e-002, -7.193628e-003, 1.920294e-002, 2.783123e-002, 1.761979e-002, 1.368441e-002, 1.175849e-002, -4.291043e-003, -8.253959e-003, -1.013109e-002, -1.877522e-002, 2.895067e-004, 1.640138e-002, 7.041997e-003, -2.474677e-004, -1.086848e-003, -2.078361e-002, 1.508117e-002, 4.208980e-004, 2.366342e-003, 3.459657e-002, 1.522004e-002, -1.405995e-002, -6.993086e-003, 1.111228e-002, 1.309879e-002, 6.018559e-003, 9.134936e-003, 1.622778e-002, 3.097272e-003, -1.132871e-002, -7.706126e-003, 2.124345e-003, 1.211495e-002, 1.679580e-002, 9.623739e-003, 3.297213e-003, -4.221860e-003, -1.435571e-002, -2.714563e-002, -3.692393e-002, -1.584932e-002, -7.156194e-003, 1.275840e-003, -1.439987e-003, -4.334741e-003, -4.117790e-003, -2.339510e-004, 9.475154e-003, 1.558294e-002, 1.333764e-002, 1.496773e-002, 8.703269e-003, -1.748277e-003, -5.631988e-003, -2.725040e-003, -8.837952e-003, -1.520354e-002, -1.122408e-002, -3.851410e-003, 8.125182e-004, -3.239834e-003, -2.106026e-002, 5.205558e-003, 2.439239e-002, -1.092702e-003, 2.785233e-002, 1.973467e-002, 3.039490e-003, 4.798775e-003, 8.529474e-003, 5.428390e-003, 1.101100e-002, 1.072536e-002, 1.085949e-002, 1.256160e-003, -1.978124e-002, -1.470384e-002, -5.102311e-003, 9.497019e-003, 1.134611e-002, 1.165372e-002, 1.198377e-002, 1.244601e-002, 7.193897e-003, -4.231682e-003, -7.791048e-003, 4.801353e-003, 8.272817e-003, 7.254042e-003, 8.387390e-003, 1.081311e-002, 7.792701e-003, 8.120493e-003, 6.117296e-003, 8.350038e-003, 1.143893e-002, 1.528833e-002, 9.494510e-003, 2.058428e-004, -5.677861e-004, 9.305598e-003, -4.587945e-003, -1.544017e-002, -1.866381e-002, -1.178292e-002, -5.191575e-004, -5.450117e-003, -2.412093e-002, -4.036079e-003, 1.187633e-002, -1.589252e-002, 1.197914e-002, 1.481136e-002, 1.334765e-002, 1.144305e-002, 1.090976e-002, -7.322957e-003, 1.101243e-002, 1.430615e-002, 5.328908e-003, -1.987439e-003, -2.165801e-002, -1.428634e-002, -1.155206e-003, 2.900573e-003, -1.853766e-003, -5.193386e-003, -5.710672e-003, -6.018714e-003, -1.559831e-003, -5.349257e-003, -4.994099e-003, -3.742147e-003, 3.478826e-003, 5.429976e-003, 9.959051e-003, 7.065268e-003, 1.665130e-003, 6.446233e-003, 4.102978e-003, 4.409965e-003, 9.317082e-003, 1.084655e-002, 6.057079e-003, -1.477710e-003, -1.100354e-003, 1.366936e-002, 1.046819e-002, -9.262587e-004, -7.654313e-003, -5.310056e-003, -3.210005e-004, 3.661017e-002, -2.654883e-002, -1.058054e-002, 5.366803e-003, -2.386507e-002, -1.987942e-003, 7.045205e-003, 1.051030e-002, 5.995250e-003, 2.571125e-003, -2.159747e-002, -5.883160e-004, 2.020731e-002, 3.295260e-003, -6.168167e-003, -1.918213e-002, -5.528878e-003, 1.794607e-002, 1.959827e-002, -1.383361e-003, -1.993595e-002, -1.707625e-002, -3.230231e-003, 5.452032e-003, 3.607142e-003, -2.776214e-004, 6.030790e-003, 2.065879e-002, 3.038060e-002, 2.720765e-002, 2.382850e-002, 2.610583e-002, 2.371298e-002, 1.159365e-002, 8.162693e-003, 9.443916e-003, 3.007729e-003, 6.676320e-004, -1.169321e-003, -1.308024e-003, 1.742699e-002, 2.256457e-002, 8.889497e-003, 3.793864e-004, -6.068354e-003, 6.247198e-004, 3.910168e-002, -2.956280e-002, -1.578151e-002, 6.210493e-003, -2.782553e-002, -8.114662e-003, 3.149838e-003, 5.551221e-003, -1.365700e-003, -6.926300e-003, -2.834952e-002, -1.161590e-002, 1.904532e-002, 3.357740e-003, -1.137196e-002, -1.592634e-002, 1.532341e-003, 2.882483e-002, 3.471836e-002, 2.105495e-002, 8.459540e-003, 1.250530e-003, -5.456795e-005, 4.164033e-004, -3.651253e-003, -4.734877e-003, -1.274409e-003, 1.123321e-002, 2.773760e-002, 3.710534e-002, 3.832053e-002, 3.993456e-002, 3.242188e-002, 1.592151e-002, 6.551986e-003, 7.414446e-004, -3.064454e-003, -2.311698e-003, -9.570262e-004, -2.981728e-003, 1.060946e-002, 1.805861e-002, 9.989738e-003, -3.467615e-003, -6.397413e-003, 1.851905e-003, 3.869823e-002, -2.922383e-002, -1.242170e-002, 1.539899e-002, -1.865434e-002, -6.200712e-003, 5.205855e-003, 7.683493e-004, -6.082387e-003, -1.063332e-002, -1.925478e-002, -2.339182e-002, 5.103549e-003, -1.449427e-003, -1.742771e-002, -1.558690e-002, 1.142086e-003, 2.225213e-002, 3.054912e-002, 3.031597e-002, 2.474185e-002, 1.932056e-002,

© ISO/IEC 2004 — All rights reserved


Copyright International Organization for Standardization
Provided by IHS under license with ISO
No reproduction or networking permitted without license from IHS
Not for Resale

1.852572e-002, 1.839099e-002, 1.797421e-002, 1.710133e-002, 1.954477e-002, 2.267669e-002, 2.328966e-002, 1.999198e-002, 1.319631e-002, 7.517364e-003, 4.209596e-003, 1.608189e-003, -7.549161e-004, -7.663821e-003, -8.022990e-003, -2.083671e-003, 3.699565e-004, -7.768760e-003, 3.685078e-005, 1.651244e-002, 1.172785e-002, -7.085236e-003, -2.117637e-003, 5.288720e-003, 3.728398e-002, -3.055331e-002, -1.602148e-002, 1.672843e-002, -1.294852e-002, -1.578169e-003, 6.314891e-003, -1.468869e-003, -7.645019e-003, -8.694848e-003, -1.261802e-002, -3.829083e-002, -1.953580e-002, -3.747289e-003, -2.121237e-002, -2.017619e-002, -5.990767e-003, 7.326607e-003, 1.909175e-002, 2.094102e-002, 1.362014e-002, 9.869253e-003, 9.890631e-003, 1.573509e-002, 1.679280e-002, 1.817639e-002, 2.006899e-002, 1.938173e-002, 1.572334e-002, 2.691449e-003, -1.475269e-002, -2.989924e-002, -2.953791e-002, -1.631463e-002, -9.796097e-003, -1.365627e-002, -1.138878e-002, -3.697328e-004, 9.730531e-004, -1.640701e-002, -7.779843e-003, 1.485845e-002, 1.677174e-002, 2.266426e-003, 1.150009e-003, 2.311392e-003, 2.787143e-002, -3.809123e-002, -2.010260e-002, 1.663922e-002, -1.012047e-002, -4.568070e-003, 5.811686e-004, -7.644661e-003, -1.086106e-002, -3.149149e-003, -8.454946e-004, -2.818536e-002, -3.497839e-002, -4.706050e-003, -1.556784e-002, -2.140768e-002, -1.092158e-002, 7.542384e-004, 8.667015e-003, 9.196385e-003, 5.274483e-003, 1.902135e-003, -3.678045e-003, -3.309970e-003, 2.114867e-004, 7.504084e-003, 1.403300e-002, 1.365387e-002, 7.729745e-003, -7.378831e-003, -2.208347e-002, -3.318955e-002, -3.184075e-002, -2.008988e-002, -1.327665e-002, -1.425882e-002, -9.539951e-003, 5.677223e-003, 5.141795e-003, -1.576292e-002, -6.432362e-003, 1.085938e-002, 9.221513e-003, -2.280259e-003, -6.445270e-003, -4.313991e-003, 2.361192e-002, -3.771240e-002, -2.165121e-002, 1.481624e-002, 3.109227e-003, -7.809635e-003, 4.638111e-003, -2.171506e-003, 3.804500e-003, 9.651538e-003, 1.225673e-002, -2.683948e-003, -1.966497e-002, -3.676538e-003, -2.939424e-003, -1.621561e-002, -1.191824e-002, 5.454128e-004, 4.132139e-004, -2.006122e-003, -1.452295e-003, -5.589530e-003, -7.969328e-003, -2.274524e-003, 2.535067e-003, 9.422413e-003, 8.158669e-003, 1.009889e-002, 6.978359e-003, -5.029253e-003, -1.472432e-002, -1.669114e-002, -1.480638e-002, -9.539619e-003, -8.430921e-003, -6.357382e-003, -3.981267e-003, 1.118053e-002, 7.433645e-003, -8.987028e-003, -4.973465e-003, 9.622415e-003, 4.186907e-003, 1.233783e-003, -1.347149e-002, -2.097707e-002, 1.457671e-002, -3.924168e-002, -2.770219e-002, 1.554839e-002, 4.207140e-003, -9.746985e-003, 3.965789e-004, 6.786338e-003, 1.793240e-002, 1.395679e-002, 1.200916e-002, 1.723997e-002, -3.566613e-003, -5.978100e-003, 5.247097e-003, 3.800673e-004, -3.130535e-003, 1.688617e-003, -3.248319e-003, -1.054894e-002, -8.992202e-003, -1.346136e-002, -1.283775e-002, -8.546308e-003, -4.085357e-003, -3.657046e-003, -7.094174e-003, -8.539434e-003, -5.132879e-003, -6.104283e-003, -4.178604e-003, 1.178516e-003, 4.788694e-003, 4.765719e-003, -3.809292e-005, 7.272289e-005, -3.118587e-003, 5.840103e-003, 6.846760e-003, -5.568094e-003, -6.575753e-003, 1.283881e-003, -3.205136e-004, -1.434481e-003, -1.605846e-002, -2.905313e-002, 1.688565e-002, -3.907660e-002, -3.090094e-002, 1.342101e-002, 8.744138e-004, -1.418924e-002, 9.061485e-004, 1.935828e-002, 1.903706e-002, -1.992157e-003, 3.015537e-003, 1.927429e-002, 5.520008e-003, -1.041424e-002, 4.481968e-003, 1.150128e-002, 8.799509e-003, 4.351129e-003, 1.300214e-003, -5.094878e-003, -1.191915e-002, -1.451229e-002, -1.621002e-002, -1.789982e-002, -1.826329e-002, -2.203493e-002, -2.220034e-002, -1.894144e-002, -1.271664e-002, -1.601140e-003, 7.653686e-003, 1.168181e-002, 1.214870e-002, 9.957767e-003, 1.819221e-003, -9.636821e-004, -1.018526e-002, -1.122236e-003, -7.284062e-003, -6.345240e-003, -2.792535e-003, 1.013977e-003, -6.150505e-003, -6.849622e-003, -2.568447e-002, -3.177147e-002, 2.951522e-002, -3.032969e-002, -2.243661e-002, 1.650463e-002, 3.753214e-004, -1.310293e-002, -1.279566e-003, 1.146463e-002, 1.377313e-003, -1.673070e-002, -2.504373e-003, 2.903771e-002, 1.984055e-002, -6.947986e-003, -7.362029e-003, 1.889210e-002, 1.259374e-002, 9.658209e-003, 1.311627e-002, 6.989732e-003, -1.853102e-003, -5.643801e-003, -8.285069e-003, -1.379243e-002, -2.110500e-002, -2.785402e-002, -2.482536e-002, -1.804726e-002, -9.872254e-003, 3.627573e-003, 9.955682e-003, 7.884731e-003, 1.537762e-002, 4.315639e-003, -2.413576e-003, -6.301325e-003, -1.951784e-002, -1.521756e-002, -9.650243e-003, 8.726787e-005, -7.975187e-005, 4.327006e-003, 2.480430e-003, 4.556444e-003, -2.315493e-002, -2.979244e-002, 3.374240e-002, -2.371583e-002, -9.337757e-003, 1.937450e-002, -5.639156e-003, -1.739045e-002, -1.125643e-002, -4.531916e-003, -8.165205e-003, -1.061369e-002, -1.246090e-003, 2.903563e-002, 2.437379e-002, -1.614299e-003, -1.061815e-002, 1.855047e-002, 2.034016e-002, 1.665969e-002, 1.878803e-002, 2.180337e-002, 2.208200e-002, 1.722929e-002, 9.011663e-003, 7.258795e-004, -7.707028e-003, -1.401025e-002, -1.534881e-002, -7.854074e-003, -3.060364e-003, -5.489596e-004, -2.413821e-003, -9.139648e-003, -3.235808e-003, -9.399932e-003, -5.816837e-003, -1.385618e-002, -2.463849e-002, -2.368076e-002, -8.215931e-003, -1.997503e-003, -6.989062e-004, 4.198030e-003, 9.916663e-003, 1.237321e-002, -1.634618e-002, -1.962695e-002, 3.842359e-002, -8.171913e-003, -4.487397e-003, 1.422017e-002, -1.847280e-002, -3.236602e-002, -1.834029e-002, -1.219291e-002, -1.282077e-002, -1.226746e-002, -1.602869e-002, 9.061743e-004, 2.677458e-003, -8.900591e-003, -2.172779e-002, -3.386507e-003, 1.660390e-003, 7.425601e-004, 4.972013e-003, 1.334616e-003, 7.342227e-003, 4.413051e-003, 8.923008e-004, -6.253888e-003, -1.342090e-002, -1.969789e-002, -1.754002e-002, -1.325850e-002, -1.000582e-002, -1.202496e-002, -9.628111e-003, -1.289995e-002, -8.522204e-003, -8.667977e-004, -5.729384e-004, -7.719231e-003, -9.068851e-003, -2.587117e-003,


© ISO/IEC 2004 — All rights reserved

Copyright International Organization for Standardization
Provided by IHS under license with ISO
No reproduction or networking permitted without license from IHS
Not for Resale

1.751693e-003, -1.933739e-003, 5.628120e-003, 1.861807e-002, 2.064767e-002, 1.408740e-002, -1.306877e-002, -1.150069e-002, 3.894728e-002, -1.227975e-003, -7.033317e-003, 1.401096e-002, 2.196684e-002, 1.887829e-003, 1.623911e-002, 1.532485e-002, 1.605688e-002, 1.365611e-002, 3.899230e-003, -2.791681e-003, 7.345170e-003, 1.165211e-002, -1.653730e-003, 4.690675e-004, 2.789837e-003, -3.322788e-003, 1.187186e-003, 3.601746e-003, -1.248692e-003, -9.670746e-003, -1.240541e-002, -1.452613e-002, -1.652195e-002, -1.724204e-002, -1.589251e-002, -1.137093e-002, -8.894906e-003, -8.677920e-003, -9.749689e-003, -9.871695e-003, -1.281141e-002, -9.922646e-003, -4.788366e-004, -1.091611e-003, 1.117064e-003, 8.059499e-003, -7.165149e-004, -1.714460e-002, 2.618746e-003, 1.355358e-002, 1.684476e-002, 3.404252e-003, -2.918193e-002, 6.212143e-003, 2.727944e-002, -1.153592e-002, -1.614247e-002, 1.056777e-002, 2.762885e-002, 7.019437e-003, 8.625155e-003, -8.088390e-004, 1.964370e-003, 7.204307e-003, -1.753303e-003, -1.532346e-002, -1.480122e-003, 3.399053e-003, -7.030482e-003, -1.836695e-003, -2.888654e-003, -4.517048e-003, -4.309779e-003, -1.576548e-003, -2.498433e-003, -5.620023e-003, -1.393932e-002, -1.467005e-002, -1.346516e-002, -1.334544e-002, -8.974861e-003, -1.166637e-003, 2.270342e-003, 5.430585e-004, -2.081024e-003, -1.008545e-002, -1.826649e-002, -7.159370e-003, 3.028979e-003, 5.838982e-003, 1.677560e-002, 2.053820e-002, 5.001578e-003, -1.222804e-002, -1.272251e-003, 3.817676e-003, 1.035304e-002, -2.535539e-003, -3.092107e-002, -1.609124e-003, 1.826346e-002, -2.111124e-002, -2.475038e-002, 5.051698e-003, 2.536584e-002, -5.533379e-003, -1.594876e-002, -2.651267e-002, -1.638811e-002, -1.077772e-002, -1.774725e-002, -2.781744e-002, -1.473462e-002, -1.864688e-002, -2.519152e-002, -1.546663e-002, -5.540393e-003, -7.095070e-003, -7.301845e-003, -1.195911e-002, -1.154105e-002, -1.081467e-002, -1.476235e-002, -1.355122e-002, -1.254776e-002, -1.119921e-002, -4.873166e-003, 4.426878e-003, 1.151856e-002, 9.279228e-003, -1.697557e-003, -1.601238e-002, -2.220544e-002, -1.221273e-002, -4.301985e-003, -3.443736e-003, 7.748981e-003, 8.514668e-003, 3.508176e-003, 4.009645e-003, 3.333378e-003, -1.858644e-003, -6.750850e-003, -7.914545e-003, -2.505672e-002, 6.055519e-003, 2.050218e-002, -1.978222e-002, -3.509935e-002, -7.572441e-003, 9.907892e-003, 9.378384e-003, -5.162218e-004, -1.379971e-002, -4.359407e-004, 4.806881e-003, 4.033428e-003, -4.687468e-003, 9.633308e-003, 2.157088e-003, -2.941272e-003, -5.708179e-004, 5.019045e-003, 8.405915e-003, 8.965962e-003, 3.551184e-003, -1.862770e-003, -1.071013e-002, -1.811026e-002, -2.013628e-002, -2.046753e-002, -1.532172e-002, -6.427821e-003, 3.974290e-003, 1.128605e-002, 1.169132e-002, 1.732966e-003, -1.174372e-002, -1.456073e-002, -1.389712e-002, -1.394304e-002, -5.553029e-003, 6.457381e-004, -1.373390e-002, -5.204277e-003, 7.205773e-003, 1.063335e-002, 3.747645e-003, -9.069994e-003, -1.697805e-002, -1.998573e-002, 1.773864e-002, 2.927193e-002, -2.000200e-002, -1.954214e-002, -4.176368e-003, 7.378436e-003, 1.867699e-003, 1.034928e-003, -1.347350e-002, -5.492728e-003, -1.066652e-002, -5.692511e-003, 2.152221e-003, 1.402775e-002, 1.196656e-002, 4.005539e-004, 8.524643e-004, -1.973233e-003, 4.249941e-003, 1.295061e-002, 1.362031e-002, 8.842615e-003, 4.352326e-004, -4.933046e-003, -8.771240e-003, -6.574839e-003, -6.166293e-004, 6.374606e-003, 1.520488e-002, 2.136268e-002, 2.583642e-002, 2.405870e-002, 1.726298e-002, 1.266565e-002, 1.074067e-002, 1.582481e-002, 2.261491e-002, 1.546421e-002, -1.305498e-002, -1.418850e-002, -7.951408e-003, -6.814152e-003, -1.263638e-002, -1.922593e-002, -2.137819e-002, -1.438926e-002, -5.788393e-003, 3.015389e-003, -4.352420e-002},
{8.541989e-003, -1.901438e-004, 1.227970e-002, -3.112964e-003, -1.268363e-002, -1.070697e-002, 5.488775e-003, 1.802214e-002, 2.037593e-002, 1.106961e-002, 9.241024e-004, -1.236878e-002, -1.650458e-002, -9.876681e-003, 1.651937e-003, 1.134310e-002, 1.935070e-002, 2.012960e-002, 1.144689e-002, 2.151684e-003, -5.995210e-003, -1.419908e-002, -1.309503e-002, -1.000807e-002, -2.371556e-003, 8.119494e-003, 1.379949e-002, 1.142345e-002, 5.101950e-003, -1.369331e-003, -1.045899e-002, -7.327373e-003, -4.957891e-003, -1.085432e-003, 2.869629e-003, -2.743859e-003, -2.306365e-002, -3.705467e-002, -5.222137e-002, -4.884484e-002, -2.700032e-002, -1.640377e-002, -2.254603e-002, -7.303651e-003, -2.151098e-003, 7.479051e-003, 2.934446e-002, -7.659415e-003, 2.413847e-003, -1.662027e-002, -2.767272e-002, -1.337290e-002, 4.981346e-003, 1.027286e-002, -1.176234e-003, -8.713008e-003, -1.415864e-002, -1.560944e-002, -5.777210e-003, 9.636186e-003, 1.536384e-002, 2.859999e-002, 3.310348e-002, 2.142945e-002, 8.589395e-003, -5.566135e-005, -4.516962e-003, -6.883172e-003, -8.256603e-003, -1.557811e-003, 2.038760e-003, 9.373794e-003, 1.932015e-002, 2.509760e-002, 1.902956e-002, 1.342578e-002, 1.258524e-002, 1.769418e-002, 2.115197e-002, 2.889842e-002, 3.045291e-002, 4.347889e-002, 3.889850e-002, 2.235832e-002, 9.000511e-003, 3.467042e-003, 1.021057e-002, 2.084620e-002, 1.545105e-002, 5.276110e-003, 5.640681e-003, 1.426386e-002, 2.364392e-002, -1.683010e-002, -7.266358e-003, -3.020570e-002, -2.612169e-002, -4.364883e-003, -5.140903e-004, -1.317590e-002, -1.638587e-002, -9.894293e-003, -1.792963e-002, -1.832144e-002, -1.318574e-002, -7.493794e-003, -4.731577e-004, 1.255869e-002, 1.515756e-002, 4.000841e-003, -4.288745e-003, -9.181033e-003, -1.159725e-002, -1.389651e-002, -1.592294e-002, -1.662600e-002, -1.488561e-002, -6.318125e-003, 7.283157e-003, 1.429689e-002, 7.170659e-003, 2.609977e-003, -9.544191e-003, -1.311542e-002, -1.584855e-002, -8.474356e-003, -1.315567e-003, 5.587643e-004, 3.027032e-003, 6.244717e-003, -3.943731e-003, -4.183390e-003, -5.401066e-003, 2.238221e-003, 1.249415e-002, 8.478313e-003, -2.978286e-004, 6.475027e-003, 1.885143e-002, -2.273322e-002, -1.165808e-002, -2.870834e-002, -9.114178e-003, 1.217919e-003, -

© ISO/IEC 2004 — All rights reserved


Copyright International Organization for Standardization
Provided by IHS under license with ISO
No reproduction or networking permitted without license from IHS
Not for Resale

2.111825e-002, -2.644960e-002, -9.391717e-003, -6.754902e-003, -2.165283e-002, -2.942699e-002, -2.305119e-002, -1.294071e-002, -1.604048e-003, 8.085749e-003, 1.422834e-002, 1.228296e-002, 9.846323e-003, 7.215724e-003, 2.213388e-003, -3.756185e-003, -1.237207e-002, -1.997306e-002, -2.376837e-002, -1.577161e-002, 5.485758e-004, 1.224830e-002, 1.313902e-002, 8.752974e-003, -5.637068e-003, -1.643694e-002, -2.864575e-002, -3.178195e-002, -2.537477e-002, -1.941304e-002, -1.583055e-002, -1.732638e-002, -2.143928e-002, -1.902121e-002, -1.102675e-002, -7.569578e-003, -6.078111e-003, 4.759728e-003, -6.023241e-003, 1.185983e-005, 3.833690e-002, -4.228515e-003, 5.011793e-003, 3.304359e-003, 2.851000e-002, 2.121612e-003, -1.884942e-002, 4.405400e-004, 1.644931e-002, 3.906591e-003, -2.139974e-002, -1.776166e-002, -9.639811e-003, -5.752373e-004, 1.214765e-002, 2.490500e-002, 3.248543e-002, 3.305800e-002, 3.073048e-002, 2.728128e-002, 1.979300e-002, 1.123865e-002, 2.236555e-003, -8.793944e-003, -1.512884e-002, -1.199474e-002, 4.176481e-003, 1.831422e-002, 2.647631e-002, 2.840173e-002, 1.304987e-002, -8.045064e-004, -9.412987e-003, -1.741672e-002, -7.900838e-003, -5.484040e-003, -8.746712e-003, -1.362322e-002, -2.047536e-002, -2.161746e-002, -1.176890e-002, 5.224282e-003, -1.682619e-002, -8.578397e-003, -1.026542e-002, -2.839704e-003, 3.020990e-002, -1.253503e-002, 5.285887e-003, 1.774504e-002, 2.757235e-002, -7.292949e-003, -7.394721e-003, 1.241841e-002, 9.377543e-003, -1.427587e-002, -1.734180e-002, -1.633304e-002, -1.619991e-002, -3.303686e-003, 6.274328e-003, 7.646685e-003, 9.747765e-003, 1.407793e-002, 1.783231e-002, 2.146907e-002, 1.611630e-002, 8.535200e-003, -1.320791e-003, -1.072228e-002, -1.979204e-002, -2.300761e-002, -1.442763e-002, -6.333382e-003, 5.514487e-003, 1.738960e-002, 1.974244e-002, 9.011643e-003, -4.467421e-003, -4.250057e-003, 8.688214e-003, 1.608410e-002, 1.278504e-002, 1.520431e-003, -1.046838e-002, -1.747508e-002, -1.539351e-002, 9.144190e-003, 4.400827e-003, -5.300342e-003, -1.047398e-002, 1.194925e-002, 3.207837e-002, -1.327739e-002, 1.113421e-002, 2.282124e-002, 1.593289e-002, -8.213873e-003, -2.401006e-003, 5.092865e-003, -6.930270e-003, -1.301946e-002, -1.178278e-002, -1.250600e-002, -1.211247e-002, -1.008312e-002, -1.188958e-002, -9.118696e-003, 6.019062e-004, 1.079413e-002, 2.205250e-002, 3.575121e-002, 3.692301e-002, 3.227553e-002, 1.903722e-002, 9.811742e-003, 1.089393e-003, -1.658766e-003, 1.803739e-003, -3.432044e-003, -5.613611e-003, -2.759663e-003, 7.135345e-003, 7.569172e-003, -1.638214e-003, -6.752896e-003, 9.672531e-004, 1.844823e-002, 2.255760e-002, 1.499547e-002, -1.256360e-003, -1.728216e-002, -1.756640e-002, -3.404076e-003, 1.402503e-002, 1.664024e-003, -1.958960e-002, 6.204494e-003, 3.692699e-002, -1.499682e-002, 1.525560e-002, 1.651885e-002, 5.034991e-003, 1.620670e-003, 2.485240e-003, -4.341079e-004, -1.696054e-003, -4.795896e-003, -6.265467e-003, -3.587955e-003, -1.112383e-002, -1.628944e-002, -1.608403e-002, -1.167440e-002, -1.862061e-004, 1.003955e-002, 2.223942e-002, 2.818318e-002, 3.100519e-002, 2.863167e-002, 2.160244e-002, 1.925300e-002, 1.455239e-002, 8.130554e-003, 8.883397e-003, 3.195472e-003, -1.146286e-003, -2.756798e-003, -9.835609e-004, -3.900531e-004, -2.391190e-003, -1.098402e-002, -6.122122e-003, 6.955720e-003, 1.421441e-002, 2.061473e-002, 2.637260e-003, -1.245674e-002, -9.524419e-003, -1.004711e-002, -1.709820e-003, 2.728120e-003, -1.636781e-002, 1.803104e-003, 3.662723e-002, -1.582117e-002, 7.713077e-003, 1.494419e-003, 1.025031e-002, 8.471686e-003, -1.105894e-003, 7.766504e-004, 1.073586e-002, 3.480683e-003, 6.377332e-003, 2.890286e-003, -2.239506e-003, -8.878246e-003, -9.308669e-003, -9.822700e-003, -5.674374e-003, -9.309728e-003, -7.781358e-003, -4.399483e-003, 7.540016e-004, 6.496498e-003, 5.813374e-003, 1.103533e-002, 1.812310e-002, 1.937569e-002, 1.969038e-002, 1.253390e-002, 7.441374e-003, 6.077842e-003, 6.470403e-003, 6.206121e-003, -2.594270e-003, -6.584785e-003, -1.092063e-002, -4.548727e-003, 1.393102e-004, 5.590422e-003, -1.880140e-003, -1.266081e-002, -2.766372e-003, -8.307146e-003, -1.397501e-002, -2.933453e-003, -1.139472e-002, 1.075214e-003, 3.479350e-002, -1.903829e-002, -1.430252e-003, -2.811021e-003, 2.167399e-002, 1.265187e-002, -2.074416e-003, 1.314327e-002, 1.511842e-002, 1.203326e-002, 1.206886e-002, 6.829620e-003, 2.922040e-003, -1.936481e-003, 1.868074e-003, -3.948759e-003, -2.100167e-002, -3.409550e-002, -3.533223e-002, -2.908496e-002, -2.307054e-002, -1.439331e-002, -9.530991e-003, -1.937903e-003, 7.996304e-003, 1.640353e-002, 2.041432e-002, 1.565090e-002, 9.732378e-003, 7.505990e-003, 3.113789e-003, 1.608861e-003, -2.898977e-003, -6.875990e-003, -6.475287e-003, -6.196842e-003, -6.314694e-003, -1.401414e-002, -1.836275e-002, -1.473378e-002, -2.614376e-003, 1.180171e-002, -1.616112e-002, -1.355890e-002, 6.277179e-003, 7.450063e-003, 3.128200e-002, 1.639021e-002, -6.100206e-003, 1.990957e-003, 3.091199e-002, 1.384823e-002, 6.292824e-003, 1.317523e-002, 6.019444e-003, 9.760624e-003, 7.729141e-003, 5.717664e-003, 4.087311e-003, 3.099618e-003, 5.593828e-003, 1.529348e-003, -1.434662e-002, -3.381720e-002, -3.859115e-002, -2.945680e-002, -2.160056e-002, -1.514829e-002, -1.235532e-002, -8.973483e-003, -3.169831e-003, 3.060830e-003, 1.204101e-002, 1.196009e-002, 3.986130e-003, 2.473107e-003, 1.546559e-003, -2.718857e-003, -6.785660e-003, -8.329044e-003, -5.718467e-003, 2.233565e-003, -4.509459e-003, -2.121262e-002, -2.502328e-002, -2.273228e-002, -1.250470e-003, 2.260441e-002, -3.228928e-003, -1.928012e-002, 8.022348e-003, 2.075371e-002, 2.497030e-002, 1.901946e-002, -8.843451e-003, 3.142790e-003, 2.448252e-002, 1.361971e-002, 2.175913e-003, 2.060411e-003, -2.700604e-003, -6.779159e-004, 7.608664e-004, 9.673480e-004, 1.133159e-003, 4.017618e-003, 6.879257e-003, 1.075414e-002, 6.894643e-004, -1.650101e-002, -2.293467e-002, -1.577783e-002, -9.858588e-003, -5.831513e-003, -


© ISO/IEC 2004 — All rights reserved

Copyright International Organization for Standardization
Provided by IHS under license with ISO
No reproduction or networking permitted without license from IHS
Not for Resale

5.620178e-003, -7.323783e-003, -9.386626e-003, -9.514406e-003, -2.302271e-003, 4.671029e-004, -2.242736e-003, -3.160651e-003, -3.423823e-003, -6.760463e-003, -1.619089e-002, -1.851250e-002, -1.372676e-002, 2.321884e-003, 2.822556e-003, -1.862106e-002, -2.902494e-002, -2.311957e-002, 1.127900e-003, 2.774423e-002, 1.140548e-002, -1.571670e-002, 8.223669e-003, 2.875090e-002, 1.476960e-002, 1.763129e-002, -7.404860e-003, -1.907110e-003, 1.529295e-002, 9.500172e-003, -1.142367e-002, -5.543788e-003, -9.204734e-003, -9.054085e-003, -3.145562e-003, 2.441623e-004, -5.488657e-003, 1.286592e-003, 1.300370e-002, 2.245017e-002, 1.866563e-002, 3.588925e-003, -5.313484e-003, 1.024955e-003, 4.547118e-003, 7.094841e-003, 8.707741e-003, 6.353702e-004, -7.183623e-003, -9.332133e-003, -8.109666e-003, -8.558488e-003, -8.280848e-003, -4.169751e-003, -6.595285e-003, -1.046519e-002, -1.735267e-002, -2.203976e-002, -1.727933e-002, -9.998812e-004, 1.423302e-002, -7.266125e-003, -2.467665e-002, -1.457919e-002, 1.243337e-002, 2.254748e-002, 1.883449e-002, -2.887495e-003, 8.910680e-003, 3.162311e-002, 8.372941e-003, 2.126147e-002, -1.024033e-003, -8.290642e-003, 1.669591e-002, -2.852707e-003, -2.576714e-002, -1.273921e-002, -1.704150e-002, -1.156146e-002, -3.403287e-003, -1.223845e-002, -1.118663e-002, 1.890276e-006, 1.766936e-002, 2.908156e-002, 2.420898e-002, 8.549956e-003, 3.570274e-003, 1.047989e-002, 1.785781e-002, 1.971272e-002, 2.123426e-002, 1.517451e-002, 4.196039e-003, -2.343204e-003, -3.484607e-003, -7.887888e-003, -8.333390e-003, -3.651159e-003, -3.378246e-003, -7.132501e-003, -6.725561e-003, -8.885924e-003, -1.001611e-002, -4.850925e-003, 1.275933e-002, 9.591141e-004, -1.461424e-002, -5.807987e-003, 2.281291e-002, 1.752652e-002, 1.976492e-002, 6.953176e-003, 1.008868e-002, 3.198949e-002, 3.927171e-004, 2.241135e-002, 3.397627e-003, -1.456400e-002, 1.371713e-002, -1.677843e-002, -3.426973e-002, -1.597832e-002, -1.094049e-002, -2.147509e-003, -9.146181e-003, -2.037539e-002, -1.311258e-002, 1.955317e-003, 1.721018e-002, 2.481195e-002, 1.269126e-002, -8.275961e-004, -2.016186e-003, 6.602869e-003, 1.550425e-002, 1.659736e-002, 1.928718e-002, 1.802564e-002, 1.021877e-002, 2.724964e-003, 3.317649e-003, 1.411534e-003, 7.547778e-004, 2.631282e-003, 5.522851e-003, 6.387012e-003, 8.248589e-003, 8.900002e-003, 3.056844e-003, -3.643003e-003, 1.261018e-002, 5.885097e-003, -4.298805e-003, 8.370750e-003, 2.762686e-002, 7.200086e-003, 1.231094e-002, 1.748552e-002, 5.033597e-003, 2.111138e-002, -1.304569e-002, 2.053030e-002, 5.888720e-003, -2.248630e-002, 8.877335e-003, -2.538745e-002, -3.067166e-002, -3.099746e-003, 2.896464e-003, 5.886619e-003, -1.586663e-002, -2.487665e-002, -1.190294e-002, -4.564469e-005, 5.236441e-003, 1.605003e-003, -1.290657e-002, -2.032122e-002, -1.601421e-002, -5.764201e-003, 2.922271e-003, 8.369525e-003, 1.163653e-002, 1.392795e-002, 8.806097e-003, 5.043351e-003, 2.017718e-003, 2.551653e-003, 2.535346e-004, 4.434821e-003, 7.271590e-003, 1.601134e-002, 2.282545e-002, 2.401108e-002, 1.392173e-002, 6.364195e-003, 1.617664e-002, 1.070650e-002, -4.423590e-003, 1.777408e-002, 3.018503e-002, -3.685208e-003, 1.654120e-003, 2.023754e-002, 7.563293e-006, 1.701132e-002, -3.498748e-002, 2.131452e-002, 6.826428e-003, -2.161831e-002, 3.232960e-003, -3.080383e-002, -1.687278e-002, 9.579384e-003, 1.927061e-002, 7.498459e-003, -1.590806e-002, -2.302047e-002, -1.232960e-002, -5.827819e-003, -9.767744e-003, -1.820503e-002, -2.655787e-002, -2.356611e-002, -1.636800e-002, -6.965391e-003, 2.720375e-003, 9.241130e-003, 1.230096e-002, 1.229648e-002, 1.000864e-002, 5.050605e-003, 6.196011e-004, 5.851933e-004, -6.948572e-004, 6.154920e-005, 4.017678e-003, 1.435158e-002, 2.623410e-002, 3.249459e-002, 2.186074e-002, 1.272693e-002, 2.176726e-002, 1.412013e-002, -5.634928e-003, 1.626339e-002, 3.051338e-002, -7.536714e-003, -2.252910e-003, 2.021859e-002, -6.414643e-003, 8.351423e-003, -4.509659e-002, 2.615746e-002, 7.835474e-003, -2.503340e-002, 1.578834e-003, -1.975582e-002, 1.977361e-003, 2.509853e-002, 2.751641e-002, 2.142499e-003, -2.216636e-002, -2.831277e-002, -1.934377e-002, -9.643127e-003, -1.490137e-002, -1.597460e-002, -1.091843e-002, -6.010530e-003, -1.792246e-003, 1.759296e-003, 1.153159e-002, 1.716687e-002, 1.848683e-002, 1.749101e-002, 1.402503e-002, 5.512367e-003, -3.538664e-003, -9.120604e-003, -1.012740e-002, -5.839745e-003, -4.090261e-004, 3.970915e-003, 1.117774e-002, 1.893081e-002, 1.013532e-002, -1.611301e-003, 1.449893e-002, 1.266536e-002, -7.749995e-003, 4.047018e-003, 2.914591e-002, -1.059501e-002, -2.848361e-003, 2.223602e-002, -1.085120e-002, 1.525625e-003, -4.417822e-002, 2.325078e-002, 1.782811e-003, -2.228935e-002, 8.663557e-003, 7.627914e-004, 1.702867e-002, 3.149735e-002, 1.527285e-002, -1.525740e-002, -3.250758e-002, -3.180201e-002, -2.412104e-002, -1.468765e-002, -6.449194e-003, 2.515411e-005, 8.478821e-003, 1.291998e-002, 7.746519e-003, 8.350475e-003, 1.856219e-002, 3.115890e-002, 3.267781e-002, 3.131669e-002, 2.375030e-002, 9.986910e-003, -3.766699e-003, -1.090255e-002, 2.861694e-004, 1.317103e-002, 2.447033e-002, 2.118232e-002, 8.455046e-003, -9.210153e-003, -2.352765e-002, -2.772526e-002, -2.073393e-003, 8.984195e-003, -6.900676e-003, -4.539169e-003, 2.080347e-002, -1.255498e-002, -1.917206e-003, 2.195286e-002, -1.263218e-002, -7.041850e-003, -4.261925e-002, 1.293824e-002, -3.667423e-003, -9.729943e-003, 2.609745e-002, 2.019097e-002, 2.893883e-002, 2.394108e-002, -5.624373e-003, -2.526230e-002, -2.438280e-002, -2.585541e-002, -2.741028e-002, -2.525756e-002, -9.986608e-003, 2.664107e-003, 6.556417e-003, 4.443501e-003, -6.191184e-003, -9.439190e-003, 1.229498e-003, 2.320455e-002, 3.264099e-002, 3.611623e-002, 1.905410e-002, -8.159357e-003, -2.008868e-002, -1.024535e-002, 1.155032e-002, 3.084307e-002, 3.821996e-002, 2.863461e-002, 6.638346e-003, -2.992623e-002, -5.458947e-002, -6.436620e-002, -2.710031e-002, 2.411080e-003, -

© ISO/IEC 2004 — All rights reserved


--`,,```,,,,````-`-`,,`,,`,`,,`---

Copyright International Organization for Standardization
Provided by IHS under license with ISO
No reproduction or networking permitted without license from IHS
Not for Resale

7.404346e-003, -1.069690e-002, 1.910122e-002, -1.193790e-002, -2.841729e-003, 1.408758e-002, -1.294878e-002, -1.117276e-002, -3.513176e-002, -3.915229e-004, -1.993431e-002, 6.130491e-003, 3.343817e-002, 3.685830e-002, 3.420354e-002, 1.379530e-002, -1.967428e-002, -1.147690e-002, -5.877243e-004, -2.835441e-002, -4.551032e-002, -3.859135e-002, -1.527803e-002, -9.888076e-004, 2.014109e-003, 4.957841e-003, -5.560943e-003, -1.608042e-002, -1.149905e-002, 1.495303e-002, 3.651236e-002, 3.621931e-002, 9.169466e-003, -2.099163e-002, -2.744107e-002, -1.344208e-002, 5.265327e-003, 1.889437e-002, 1.984360e-002, 1.676252e-002, 7.274872e-003, -1.275258e-002, -3.904014e-002, -5.446177e-002, -3.231652e-002, 5.566345e-003, -5.527030e-003, -1.552582e-002, 1.551300e-002, -1.252804e-002, -4.451765e-003, 6.993946e-003, -1.062664e-002, -5.323146e-003, 4.041425e-003, -3.432513e-003, -1.727625e-002, 6.548338e-003, 2.386294e-002, 3.366594e-002, 2.224838e-002, 9.631665e-003, -5.251152e-003, 1.208116e-002, 5.210321e-003, -2.860992e-002, -3.684538e-002, -2.649869e-002, -9.478612e-003, 3.603938e-003, 7.111577e-003, 2.349420e-002, 2.359959e-002, 9.398834e-003, 4.863570e-003, 1.906012e-002, 4.647601e-002, 4.972745e-002, 1.892300e-002, -1.307727e-002, -1.161415e-002, 8.039752e-003, 2.717753e-002, 3.267896e-002, 1.809155e-002, 4.798014e-003, -3.791514e-003, -1.583543e-002, -3.255544e-002, -4.405222e-002, -2.296147e-002, 1.706444e-002, 4.976586e-003, -1.431001e-002, 1.019985e-002, -2.359586e-002, -1.208103e-002, -1.836801e-003, -1.606447e-002, -1.291161e-003, 1.340992e-002, -5.287839e-003, -8.168085e-003, 1.059253e-002, 6.836928e-003, 2.165681e-002, 4.480552e-003, 4.596830e-003, 1.154468e-002, 1.164077e-002, 2.271103e-002, -1.553476e-003, -2.244196e-002, -4.710713e-002, -5.123871e-002, -3.577321e-002, -4.597287e-002, -3.471682e-002, -6.716183e-003, 1.058936e-002, 1.600151e-002, 1.147421e-002, 3.203407e-002, 4.446042e-002, 2.265438e-002, -3.257843e-003, -1.955290e-003, 9.658534e-003, 2.284175e-002, 8.314635e-003, -1.450376e-002, -3.892483e-002, -4.113370e-002, -2.526197e-002, -1.322218e-002, -1.710128e-002, -3.460797e-003, 2.318316e-002, 9.435644e-003, -4.943430e-003, 1.787267e-002, -1.930739e-002, -1.577160e-002, -1.749424e-002, -2.625914e-002, 8.140468e-003, 1.204308e-002, -1.129722e-002, -8.900012e-003, 5.002335e-003, -1.351539e-002, 7.513715e-003, -1.427815e-002, -1.511640e-003, 5.025003e-003, 1.000364e-002, 4.535261e-002, 2.783682e-002, -3.234730e-002, -8.100875e-002, -4.214679e-002, 2.183223e-002, -2.154487e-002, -3.796859e-002, -1.750163e-002, -1.885278e-002, -1.713971e-002, -2.067427e-002, 6.800915e-004, 8.967182e-003, -5.344901e-003, -2.798998e-002, -1.966296e-002, 2.533131e-003, 3.735730e-002, 5.639991e-002, 3.859806e-002, -1.364269e-002, -4.376254e-002, -2.390204e-002, 8.028223e-003, 3.058482e-002, 3.571577e-002, 2.904714e-002, 1.306582e-002, 1.378325e-002, 3.889775e-002, 2.336812e-003, -1.624845e-002, -1.692116e-002, -1.554169e-002, 1.488723e-002, 1.127576e-002, -6.794051e-003, -1.682636e-003, 3.010299e-003, -2.427626e-002, -6.030046e-003, -2.917296e-002, -1.129695e-002, 1.120620e-002, 1.239607e-002, 3.287893e-002, 5.168112e-003, -5.342117e-002, -1.037831e-001, -7.374583e-002, -1.580767e-003, -2.760767e-002, -3.702149e-002, 3.870982e-003, -2.580347e-002, -5.089273e-002, -4.178615e-002, -3.049031e-002, -3.739767e-002, -3.976371e-002, -5.003606e-002, -4.357002e-002, -5.905488e-003, 4.679061e-002, 3.186268e-002, 1.595743e-002, -5.129687e-002, -9.744145e-002, -3.925561e-002, 2.422765e-002, 5.089845e-002, 5.622224e-002, 2.013719e-002, -2.371284e-003, -5.154918e-003, 2.822674e-002, 7.449847e-003, -9.217943e-003, 6.268321e-003, 2.173957e-003, 5.724288e-003, 1.268440e-002, -3.057931e-003, 1.619885e-002, 1.319683e-002, -1.264594e-002, 3.409676e-004, -2.507789e-002, -6.489249e-003, 1.690463e-002, 1.352224e-002, 1.744655e-002, -2.376686e-003, -4.114003e-002, -5.627087e-002, -2.970256e-002, 2.945615e-002, 3.937820e-002, 3.356244e-002, 2.302646e-002, -2.635805e-002, -6.830887e-002, -5.563540e-002, -4.659329e-002, -5.150112e-002, -5.011153e-002, -5.095584e-002, -3.831820e-002, -1.159865e-002, 4.052092e-002, 5.658909e-002, 4.313191e-002, 5.172345e-003, -1.942972e-002, -1.382689e-002, 7.563370e-003, 3.316082e-002, 4.173834e-002, 1.201179e-002, -3.602136e-003, -8.626119e-003, 2.033738e-002, 3.442564e-003, 2.168356e-003, 3.406198e-002, 1.783574e-002, 2.047140e-003, 7.456291e-003, -1.698921e-003, 2.139795e-002, 1.422151e-002, 1.391191e-003, 1.679364e-002, -1.473231e-002, -2.457231e-003, 1.208079e-002, 7.781783e-003, 1.853213e-002, 1.200051e-002, -8.433529e-003, -1.047265e-002, 2.299982e-002, 5.963093e-002, 7.221397e-002, 5.904753e-002, 1.439587e-002, -5.506287e-002, -8.220371e-002, -5.027308e-002, -4.449675e-002, -4.635359e-002, -4.418785e-002, -3.744037e-002, -4.594592e-002, -2.251242e-002, 3.337663e-002, 6.454356e-002, 6.695142e-002, 4.223801e-002, 2.046503e-002, 6.213600e-003, 5.864584e-003, 1.187430e-002, 1.214862e-002, -4.505198e-003, -1.196830e-002, -1.124966e-002, 1.595036e-002, -4.246001e-003, 3.001515e-003, 3.487808e-002, 8.327419e-003, -4.744794e-003, -5.366905e-003, -6.236473e-003, 1.241384e-002, -6.336078e-004, 5.547622e-003, 1.699082e-002, -1.918293e-002, -7.119386e-003, 1.239396e-003, 1.397052e-003, 1.865555e-002, 1.563897e-002, 8.736024e-004, 8.194022e-003, 3.633612e-002, 5.807202e-002, 5.813558e-002, 3.776344e-002, -1.424214e-002, -6.723406e-002, -5.917674e-002, -2.470551e-002, -2.067934e-002, -1.783787e-002, -2.246937e-002, -2.636768e-002, -3.303437e-002, -3.065346e-002, 6.059740e-003, 4.374954e-002, 5.211931e-002, 3.896056e-002, 2.578060e-002, 7.590081e-003, -2.565814e-003, -7.409695e-003, -9.090120e-003, -1.535598e-002, -1.864621e-002, -1.166662e-002, 4.934499e-003, -1.786955e-002, -6.210492e-003, 2.784775e-002, -5.085049e-004, -9.558050e-003, -1.166160e-002, -8.323979e-003, 7.998209e-003, -9.189117e-003, 2.880820e-003, 9.837702e-003, -1.491946e-002, -1.933306e-003, -


© ISO/IEC 2004 — All rights reserved

Copyright International Organization for Standardization
Provided by IHS under license with ISO
No reproduction or networking permitted without license from IHS
Not for Resale

4.837721e-003, -4.067089e-003, 1.246655e-002, 1.295654e-002, -4.007240e-004, 8.983617e-003, 3.181142e-002, 4.472277e-002, 3.730816e-002, 4.344941e-003, -4.237964e-002, -5.842192e-002, -1.850489e-002, 3.922000e-003, 1.460105e-002, 1.844299e-002, 1.040732e-002, -9.664481e-003, -1.708122e-002, -2.430037e-002, -1.183311e-002, 1.298830e-002, 2.976528e-002, 2.733432e-002, 1.760958e-002, 2.071002e-003, -1.203752e-002, -2.092249e-002, -1.840929e-002, -1.382189e-002, -1.941768e-002, -1.238670e-002, -3.437482e-003, -2.999512e-002, -7.663554e-003, 1.376863e-002, -5.339394e-003, -2.804388e-002, -1.681843e-002, 6.893584e-003, 2.254417e-003, -8.109557e-003, 2.186175e-003, -1.619276e-003, -5.742478e-003, 1.093179e-002, -5.396546e-003, -7.104961e-003, 5.648373e-003, 1.097019e-002, 9.597171e-003, 1.736281e-002, 3.463318e-002, 3.276833e-002, 1.465460e-002, -1.621742e-002, -3.456869e-002, -2.090794e-002, 5.716226e-003, 3.144778e-002, 4.575456e-002, 4.521188e-002, 3.840647e-002, 1.109317e-002, -1.217734e-002, -1.142048e-002, -1.316844e-002, -1.330824e-003, 8.885301e-003, 1.483037e-002, 1.344902e-002, 5.482708e-003, -5.567553e-003, -1.123635e-002, -1.461367e-002, -7.764107e-003, -2.151814e-002, -1.112583e-002, -1.107286e-002, -3.259469e-002, -1.336244e-003, -2.345774e-004, -7.637640e-003, -2.227217e-002, -2.942447e-002, 1.179387e-002, 3.077625e-003, -6.743918e-003, -8.707121e-003, -2.022075e-002, -3.332674e-003, 1.012099e-002, -3.522828e-003, -7.930346e-003, 1.123880e-002, 1.815498e-002, 1.865575e-002, 1.531475e-002, 2.163338e-002, 1.735643e-002, 4.199171e-003, -3.485339e-003, -8.726410e-003, -9.061590e-003, 1.239233e-002, 4.115995e-002, 5.493754e-002, 5.153879e-002, 5.355598e-002, 3.954087e-002, -1.068449e-002, -2.760806e-002, -5.815255e-003, 1.223381e-002, 1.690216e-002, 2.300436e-002, 2.421586e-002, 2.022500e-002, 1.319384e-002, 5.541124e-003, 1.097312e-003, -5.873515e-003, -2.472983e-002, -1.240747e-002, -1.392592e-002, -2.672308e-002, 4.837212e-003, 2.470126e-003, 3.183378e-003, -8.147163e-003, -2.269404e-002, 8.254337e-003, 9.909704e-004, -3.295597e-003, -9.049066e-003, -2.222012e-002, -1.098001e-002, 3.177045e-003, 1.563562e-003, -5.632873e-003, 1.265773e-002, 3.055219e-002, 3.652491e-002, 3.874788e-002, 4.280138e-002, 3.758440e-002, 2.534568e-002, 1.229141e-002, -6.967077e-003, -6.148121e-003, 1.082268e-002, 3.777542e-002, 5.210323e-002, 3.993091e-002, 3.481155e-002, 2.786507e-002, 2.370276e-003, -2.663482e-002, -1.602281e-002, 3.553163e-003, 2.439432e-002, 3.547244e-002, 3.686083e-002, 3.443871e-002, 2.783162e-002, 1.823605e-002, 1.005605e-002, -2.178328e-003, -1.635640e-002, -1.093513e-002, -7.605309e-003, -1.452881e-002, 8.186765e-003, 9.027998e-003, 1.719710e-002, -1.553642e-002, -7.295992e-003, 1.277987e-002, -2.031254e-003, -3.631559e-003, -2.832078e-003, -1.233419e-002, -1.240602e-002, -7.279689e-003, 3.971501e-003, -1.834857e-003, 1.533113e-002, 3.689594e-002, 4.483181e-002, 4.463300e-002, 4.311675e-002, 3.281808e-002, 1.323466e-002, 1.298122e-003, -5.401671e-003, -6.001891e-003, 2.123712e-002, 4.181501e-002, 5.204871e-002, 5.253310e-002, 4.369614e-002, 1.918813e-002, 5.253002e-003, -9.441695e-003, -1.768341e-002, -1.296163e-002, 5.993792e-003, 2.901588e-002, 4.112170e-002, 4.044705e-002, 3.196630e-002, 2.670663e-002, 2.283653e-002, 4.976343e-003, -5.561554e-003, 1.278349e-003, 2.898302e-003, -3.992189e-003, 3.259936e-003, 1.446352e-002, 1.728488e-002, -1.533947e-003, 9.668408e-003, 2.619876e-002, 4.419196e-003, 1.894799e-003, 3.225646e-003, -7.504756e-003, -1.098673e-002, -1.284897e-002, -1.513167e-003, 3.666249e-003, 1.315886e-002, 3.438672e-002, 4.379988e-002, 4.216001e-002, 3.255284e-002, 1.800566e-002, 8.467398e-003, 1.252482e-002, 1.012773e-002, 5.356334e-004, 3.361885e-002, 6.098954e-002, 5.304964e-002, 6.738936e-002, 6.434868e-002, 3.738441e-002, 1.022212e-002, 2.371909e-004, -3.043444e-003, -1.041569e-002, -1.188065e-003, 2.041128e-002, 3.423819e-002, 3.726775e-002, 3.437196e-002, 3.541432e-002, 2.867008e-002, 1.480025e-002, 9.894362e-003, 1.643958e-002, 1.641535e-002, 5.305175e-003, -6.740351e-003, 8.207395e-003, 2.176765e-002, 4.914278e-003, 2.398258e-002, 2.636752e-002, 6.722637e-003, 7.763076e-003, 2.252572e-003, -1.449041e-002, -1.002057e-002, -7.228442e-003, -7.536805e-003, 4.047022e-003, 1.094468e-002, 2.870318e-002, 4.170044e-002, 3.496395e-002, 2.096775e-002, 1.238357e-002, 2.150153e-002, 3.395702e-002, 3.542047e-002, 4.344194e-002, 6.881026e-002, 5.927905e-002, 4.099153e-002, 4.929657e-002, 4.306107e-002, 4.516916e-002, 3.361868e-002, 2.414822e-002, 2.166084e-002, 8.297058e-003, -3.316069e-003, 5.643220e-003, 2.220799e-002, 3.105188e-002, 3.500329e-002, 4.077854e-002, 3.211255e-002, 1.925239e-002, 2.575084e-002, 2.858434e-002, 2.052335e-002, 1.153059e-002, -6.406360e-003, 1.476001e-003, 2.149636e-002, 1.081358e-002, 2.206757e-002, 2.162800e-002, 1.982361e-003, 6.725330e-003, 4.652208e-003, -1.357875e-002, 1.793119e-003, 7.838721e-003, -8.677833e-003, -1.435726e-004, 5.721604e-003, 2.155006e-002, 3.258400e-002, 2.353020e-002, 7.863339e-003, 9.214630e-003, 2.365048e-002, 3.987528e-002, 4.536677e-002, 5.847135e-002, 7.027185e-002, 5.439095e-002, 2.930144e-002, 1.881958e-002, 1.928961e-002, 3.924184e-002, 5.523216e-002, 5.562892e-002, 4.686151e-002, 2.476509e-002, 4.192923e-003, -8.729385e-003, 4.314287e-003, 1.821693e-002, 3.309523e-002, 3.423099e-002, 2.776208e-002, 1.988168e-002, 2.671063e-002, 2.982473e-002, 2.153273e-002, 4.110237e-004, -1.497716e-002, -6.287531e-003, 1.359436e-002, 1.509960e-002, 1.671715e-002, 1.467657e-002, -1.093421e-002, 3.099015e-004, 6.345109e-003, -8.834226e-003, 1.109354e-002, 2.044317e-002, -2.492975e-003, -1.418952e-003, 4.026008e-003, 1.391919e-002, 2.358368e-002, 1.310290e-002, -3.722392e-003, -9.808686e-003, -5.221046e-004, 8.574283e-003, 1.962053e-002, 3.506490e-002, 4.441608e-002, 4.587526e-002, 3.655223e-002, 2.491304e-002,

© ISO/IEC 2004 — All rights reserved


Copyright International Organization for Standardization
Provided by IHS under license with ISO
No reproduction or networking permitted without license from IHS
Not for Resale

1.649712e-002, 3.209268e-002, 4.307708e-002, 4.611895e-002, 4.295633e-002, 3.050671e-002, 7.293252e-003, -1.253792e-002, -1.244675e-002, 1.880456e-003, 2.738827e-002, 2.365670e-002, 1.423272e-002, 1.208716e-002, 2.368840e-002, 2.242554e-002, 8.437837e-003, -9.137249e-003, -1.519535e-002, -5.667212e-003, 1.218550e-002, 1.663573e-002, 1.353171e-002, -9.880703e-003, -1.688779e-002, -8.581314e-003, 3.006385e-003, -2.138298e-003, 2.041834e-002, 2.907985e-002, 7.413308e-003, 1.015723e-003, 5.734011e-003, 1.063927e-002, 1.470899e-002, 4.267256e-003, -1.698290e-002, -3.711446e-002, -3.934446e-002, -2.695090e-002, 6.246418e-004, 2.372704e-002, 3.699267e-002, 4.217681e-002, 4.235156e-002, 3.895511e-002, 1.861288e-002, 2.381411e-002, 3.576663e-002, 3.470950e-002, 2.261595e-002, 1.065449e-002, -9.489112e-003, -2.376546e-002, -2.046559e-002, -8.089151e-003, 1.910218e-002, 1.242122e-002, -3.927885e-003, 1.951290e-003, 1.752257e-002, 5.544086e-003, -1.905433e-004, -3.216821e-003, -1.017304e-002, -8.002526e-003, 1.191373e-002, 1.248263e-002, 2.191324e-002, -1.114245e-002, -1.809147e-002, -1.608371e-002, -6.430874e-003, 1.557470e-003, 2.079843e-002, 3.101247e-002, 7.992850e-003, -5.873216e-003, 4.127096e-003, 5.611133e-003, 9.167712e-003, -5.628067e-003, -3.028658e-002, -5.794652e-002, -5.855839e-002, -3.122368e-002, 7.495619e-003, 2.916840e-002, 3.343716e-002, 4.151183e-002, 4.787816e-002, 4.926546e-002, 3.424793e-002, 3.595350e-002, 4.435270e-002, 3.971254e-002, 1.946862e-002, -2.599083e-003, -1.956348e-002, -2.972884e-002, -2.769751e-002, -1.156617e-002, 1.041616e-002, 5.608024e-005, -1.675397e-002, -1.165993e-002, 3.043278e-003, -7.509592e-003, 4.715482e-003, -4.515888e-003, -9.875515e-003, -8.433562e-003, 1.528265e-002, 2.109411e-003, 2.378566e-002, -8.001756e-003, -1.123713e-002, -1.924947e-002, -7.016955e-003, -4.912942e-004, 4.382164e-003, 1.140707e-002, -2.346725e-003, -2.090334e-002, 3.611950e-004, 2.047378e-003, 2.339422e-003, -9.737508e-003, -3.103779e-002, -4.256240e-002, -2.811526e-002, -8.231000e-003, 6.929185e-003, 2.046488e-002, 3.233010e-002, 4.393262e-002, 4.944725e-002, 4.276209e-002, 3.757036e-002, 3.535227e-002, 3.563984e-002, 3.158038e-002, 2.102395e-002, 1.224955e-002, -2.465880e-003, -2.362470e-002, -3.261790e-002, -1.828080e-002, -2.269396e-003, -1.314634e-002, -2.709302e-002, -1.914793e-002, -8.300825e-003, -1.086698e-002, 3.504758e-003, -1.031480e-002, -1.187502e-002, 3.908757e-003, 1.573060e-003, -2.614192e-003, 3.265324e-002, 3.647317e-003, 2.455994e-003, -7.097794e-003, -4.620897e-003, -3.529118e-003, 2.130585e-003, -6.586943e-003, -1.060295e-002, -1.917255e-002, -3.051711e-003, -9.568361e-004, -5.982512e-003, -1.078559e-002, -1.933624e-002, -1.267099e-002, -9.122248e-003, -1.733573e-002, -1.981680e-002, -3.897284e-003, 1.519871e-002, 2.804935e-002, 2.915621e-002, 2.431845e-002, 1.764076e-002, 2.221734e-003, -5.306867e-003, -9.178836e-004, 9.585420e-003, 1.713048e-002, 1.117811e-002, -1.506327e-002, -2.937367e-002, -1.969205e-002, -1.137623e-002, -2.568512e-002, -2.786189e-002, -1.424784e-002, -2.212457e-002, -9.217688e-003, -3.023843e-003, -1.248999e-002, 5.221398e-004, 1.719349e-002, 2.585369e-003, -6.329994e-003, 2.841203e-002, 5.900464e-003, 9.475905e-003, 3.060822e-003, 1.126380e-003, 5.256804e-004, 5.488163e-003, -5.252143e-003, -9.155828e-003, -1.120679e-002, -8.965873e-004, 1.098515e-003, -9.324177e-003, -7.473989e-003, 2.567447e-004, 1.548642e-002, 1.267495e-002, 6.353265e-003, 1.149383e-002, 2.086933e-002, 2.968228e-002, 2.766250e-002, 1.799223e-002, 1.013006e-002, -9.041124e-004, -1.053334e-002, -2.236920e-002, -1.659835e-002, -5.735942e-004, 1.222515e-002, 1.128553e-002, -9.355491e-003, -1.941321e-002, -1.516779e-002, -1.966845e-002, -3.322286e-002, -1.405333e-002, -4.323780e-003, -2.486876e-002, 1.589594e-003, 8.313160e-003, 1.627401e-003, 1.558565e-002, 7.036912e-003, 1.709164e-003, -8.456779e-003, 2.246269e-002, 3.974042e-003, 8.351668e-003, 9.381927e-003, 1.101567e-002, 4.870968e-003, 4.140451e-003, 5.077918e-003, -1.855916e-003, 4.155317e-003, 7.382046e-003, 3.530061e-003, -9.414790e-003, 3.984683e-004, 1.596904e-002, 3.579617e-002, 3.870919e-002, 3.295708e-002, 2.931164e-002, 2.581084e-002, 1.793805e-002, 5.876183e-003, -7.173650e-003, -1.944915e-002, -2.871844e-002, -2.718696e-002, -2.095126e-002, -4.342341e-003, 1.380759e-002, 2.258386e-002, 1.814163e-002, 4.786787e-003, -2.029630e-003, -1.490073e-003, -2.059990e-002, -2.664957e-002, 9.087312e-003, 9.145558e-003, -2.471614e-003, 3.237510e-002, 2.227818e-002, 1.067037e-002, 2.585188e-002, 7.526076e-003, -1.208571e-003, -9.623847e-003, 1.102404e-002, -4.054792e-003, 1.080832e-002, 1.087091e-002, 1.520723e-002, 1.209535e-002, 8.892681e-003, 2.214989e-002, 7.701719e-003, 2.099283e-002, 1.922263e-002, 2.927076e-003, -1.481200e-002, -1.003695e-002, 8.207322e-003, 1.627579e-002, 1.773721e-002, 9.753066e-003, 9.158027e-003, 1.162724e-002, 1.145186e-002, 2.262582e-003, -7.244985e-003, -1.122824e-002, -1.519136e-002, -1.632908e-002, -1.763307e-002, -1.399516e-002, -7.472917e-003, 1.615264e-003, 1.217099e-002, 1.294762e-002, 1.488236e-002, 7.978666e-003, -1.601644e-002, -7.453538e-003, 2.869739e-002, 1.216162e-002, 2.165102e-002, 3.226652e-002, 8.304481e-003, 9.007728e-003, 2.505379e-002, 4.011292e-003, 2.511215e-003, -1.077638e-002, -1.094252e-003, -1.247736e-002, 1.813282e-002, 1.515470e-002, 1.980147e-002, 1.502717e-002, 8.770923e-003, 2.552359e-002, 1.946318e-002, 2.294633e-002, 2.479845e-002, 1.148891e-002, -1.426651e-002, -1.579872e-002, -3.725378e-003, -7.898104e-003, -1.140480e-002, -1.347153e-002, -1.292953e-002, -2.484346e-003, 5.869331e-003, 6.192749e-003, 4.896636e-003, 3.619616e-003, -3.295920e-003, -1.345457e-002, -2.493569e-002, -2.900410e-002, -2.597902e-002, -1.998295e-002, 2.338226e-004, 1.783842e-002, 3.055981e-002, 1.231157e-002, -7.569557e-003, 3.457268e-003, 1.652317e-002, -1.788949e-003, 2.024517e-002, 1.010077e-002, -


© ISO/IEC 2004 — All rights reserved

Copyright International Organization for Standardization
Provided by IHS under license with ISO
No reproduction or networking permitted without license from IHS
Not for Resale

1.073239e-002, 4.839459e-003, 1.780143e-002, -6.874118e-004, 1.145403e-002, 1.939849e-004, -1.319024e-002, -7.861245e-003, 3.356470e-003, 1.724689e-002, 1.697241e-002, 4.806411e-003, -3.292785e-003, 1.910270e-002, 1.148820e-002, 4.020325e-003, 9.856731e-005, 9.523334e-003, -9.997759e-003, -1.047901e-002, -2.291120e-004, -1.143499e-002, -2.120219e-002, -2.161170e-002, -2.351227e-002, -1.890385e-002, -9.278449e-003, -5.522692e-003, -9.897682e-004, 1.414035e-004, -4.157859e-003, -1.343544e-002, -2.571999e-002, -3.266935e-002, -3.453126e-002, -2.682077e-002, -8.102841e-003, 1.882323e-002, 3.068144e-002, 6.531505e-003, -2.700091e-003, 4.503237e-003, -7.498987e-004, -9.393780e-003, 1.154573e-002, -1.106937e-002, -2.283134e-002, 3.891265e-003, 5.008685e-003, -2.962581e-003, 1.675464e-002, 7.677642e-003, -1.905518e-002, -7.854204e-003, 6.292183e-003, 1.540471e-002, 4.694035e-003, -1.205576e-002, -1.300127e-002, 1.486561e-002, 1.769300e-002, -1.371749e-002, -2.342770e-002, 9.919033e-003, 7.109563e-003, -2.760310e-003, 7.358782e-003, 2.497506e-003, -9.090450e-003, -1.770291e-002, -2.338896e-002, -2.394175e-002, -1.969427e-002, -1.175725e-002, -1.488468e-003, 1.281805e-003, -2.410715e-003, -7.284089e-003, -1.856379e-002, -2.183776e-002, -2.479303e-002, -2.498646e-002, -8.186451e-003, 1.837450e-002, 2.182391e-002, 4.860449e-003, 1.018280e-003, 5.598734e-003, -1.108484e-002, -4.884806e-003, 8.134605e-003, -9.828108e-003, -2.380022e-003, 1.852284e-002, 3.735488e-003, -3.864160e-003, 1.284469e-002, 3.108613e-003, -1.433630e-002, -2.372978e-003, 5.536296e-003, 1.000318e-002, -1.101115e-002, -2.786245e-002, -1.513688e-002, 1.932893e-002, 1.728671e-002, -1.577443e-002, -2.978762e-002, 7.666368e-003, 2.133765e-002, 1.312805e-002, 1.861886e-002, 1.703423e-002, 5.664377e-003, -7.126380e-003, -1.478805e-002, -2.040273e-002, -1.871623e-002, -7.603594e-003, 9.107130e-003, 1.668274e-002, 1.095056e-002, 3.255463e-003, -7.154252e-003, -9.795848e-003, -1.766546e-002, -2.300958e-002, -8.945736e-003, 1.600206e-002, 1.181537e-002, 4.472045e-004, 5.242924e-003, 1.019326e-002, -2.112872e-003, 3.325323e-003, 1.369820e-002, 1.690269e-003, 1.698511e-002, 3.052104e-002, 1.466375e-002, -1.272534e-002, -2.997155e-003, -5.393406e-003, -6.506248e-003, -6.992576e-004, 1.886571e-003, 5.359885e-003, -1.888756e-002, -2.870090e-002, -1.552801e-003, 2.662510e-002, 1.779279e-002, -7.386651e-003, -2.318538e-002, 7.136961e-003, 3.052756e-002, 1.882452e-002, 1.567693e-002, 1.319078e-002, 5.685403e-003, 6.682805e-004, -1.002732e-002, -1.393325e-002, -8.039605e-003, 3.714998e-003, 1.861947e-002, 2.829071e-002, 2.820458e-002, 1.842225e-002, 5.933305e-003, -4.991851e-003, -1.875744e-002, -2.280343e-002, -9.677091e-003, 8.277094e-003, 9.517549e-004, -3.768896e-003, 1.146526e-002, 1.395245e-002, 6.405348e-003, 8.725593e-003, 6.285506e-003, 1.169725e-002, 2.345400e-002, 2.641244e-002, 1.455970e-002, -4.934014e-003, -9.039927e-003, -1.156711e-002, -2.160717e-003, -7.140391e-003, -1.135387e-002, -4.814330e-003, -1.763292e-002, -1.375461e-002, 8.821364e-003, 6.749922e-003, 3.662944e-003, 3.881177e-003, -1.638670e-002, -3.543770e-003, 1.130867e-002, -4.492581e-003, -4.604844e-003, -6.105261e-003, -6.901287e-003, -1.197587e-002, -2.365161e-002, -2.673840e-002, -1.748746e-002, -3.671281e-003, 1.367575e-002, 2.455427e-002, 2.712481e-002, 1.825558e-002, 2.445940e-003, -1.123227e-002, -3.096453e-002, -3.284344e-002, -2.837714e-002, -2.219279e-002, -1.771284e-002, -1.209108e-002, -1.089153e-002, -6.536997e-003, -6.904812e-003, -3.099860e-003, -1.566185e-002, -4.632549e-003, -1.216171e-002, -1.427089e-002, -7.112672e-003, 9.609180e-003, 7.220712e-003, -1.282975e-002, -4.761014e-004, 5.503622e-003, 4.979595e-003, 1.190543e-002, 7.313716e-003, 1.126915e-002, 1.774661e-002, 3.031715e-003, 8.611296e-003, 2.421544e-002, 5.086373e-003, -1.185299e-002, 5.177197e-003, -2.089254e-004, -4.459309e-004, 4.401976e-003, -9.797022e-004, -3.418102e-003, -1.484299e-002, -2.509536e-002, -1.943798e-002, -4.419430e-003, 1.082325e-002, 2.144234e-002, 2.418642e-002, 1.971648e-002, 7.168470e-003, -6.746181e-003, -6.493166e-003, -6.519237e-003, -9.405203e-003, -8.590636e-004, 1.559477e-002, 1.483049e-002, 3.279408e-003, 1.667922e-005, 1.113741e-003, 3.163460e-004, -1.999794e-004, 6.694760e-003, -1.739261e-002, -3.185378e-002, -2.565659e-002, 1.725761e-002, 3.176360e-002, 4.227734e-003, -1.623915e-003, 4.231415e-003, 3.073087e-003, -6.796239e-003, -9.587721e-003, 1.011436e-003, -2.490720e-003, -2.406031e-002, -2.231035e-002, 8.535685e-003, -3.419604e-003, -3.043071e-002, -1.014414e-002, -7.393621e-003, -5.588922e-003, 4.802853e-004, -2.624653e-003, -7.152729e-003, -1.325725e-002, -1.168967e-002, -6.473003e-003, 6.527808e-003, 1.780418e-002, 3.158908e-002, 4.112984e-002, 3.938453e-002, 2.634309e-002, 7.558171e-003, -6.610908e-003, -7.813517e-003, -3.629746e-003, 1.216842e-002, 2.570301e-002, 1.280495e-002, 9.655638e-003, 1.965113e-002, 4.546426e-003, -1.466072e-002, 1.448536e-003, 2.156280e-002, 4.936667e-003, -2.295581e-002, -2.530376e-002, 2.579804e-003, 3.134663e-002, 2.728250e-003, -2.705104e-004, -5.342680e-003, -2.015812e-003, -1.052734e-003, 1.019938e-005, 2.236536e-003, -6.804006e-003, -2.227957e-002, -2.921552e-002, 1.040566e-002, 1.725066e-003, -2.003507e-002, -6.002161e-003, -5.040981e-003, -8.336729e-003, -4.603749e-003, -3.578957e-003, -7.325946e-003, -1.376228e-002, -1.948537e-002, -1.810278e-002, -1.042594e-002, -6.183714e-004, 1.314811e-002, 2.034961e-002, 1.674205e-002, 3.377244e-003, -1.393018e-002, -1.966655e-002, -1.637654e-002, -6.312890e-003, 9.893503e-003, 1.503483e-002, 1.640375e-003, -3.666509e-004, 1.646015e-002, 3.912637e-003, -2.207800e-002, -2.194448e-002, 3.079396e-003, 2.545380e-003, -1.279516e-002, -2.128084e-002, 6.489234e-004, 2.596942e-002, -1.019612e-002, -1.761885e-002, -1.258592e-002, 9.560626e-003, 1.408709e-002, -2.619264e-003, -1.159126e-003, 9.221262e-003, -3.562472e-003, -1.739177e-002, 9.840489e-003,

© ISO/IEC 2004 — All rights reserved


--`,,```,,,,````-`-`,,`,,`,`,,`---

Copyright International Organization for Standardization
Provided by IHS under license with ISO
No reproduction or networking permitted without license from IHS
Not for Resale

5.671794e-003, -6.151780e-003, 1.186248e-002, 5.740672e-003, -2.300480e-003, -4.441201e-003, -5.920565e-003, -4.114074e-003, -7.057429e-003, -1.169415e-002, -1.629315e-002, -1.446210e-002, -7.969818e-003, 1.342033e-003, 3.980506e-003, -9.347151e-004, -1.054149e-002, -2.245049e-002, -2.374153e-002, -1.759298e-002, -3.198159e-003, 1.297475e-002, 1.002273e-002, -3.539761e-004, -4.562877e-003, 7.545208e-003, 2.682053e-003, -2.373307e-003, -5.101120e-003, 2.146406e-003, -1.316828e-003, -5.127603e-003, 2.579503e-003, 2.004975e-002, 3.269480e-002, -9.649853e-003, -1.232194e-002, 1.104045e-002, 1.898731e-002, 9.847563e-003, 5.487666e-003, 2.023365e-002, 4.143841e-002, 3.152308e-002, 4.386169e-003, 1.254223e-002, 8.550071e-003, 1.219393e-003, 2.192683e-002, 2.108293e-002, 1.545655e-003, -1.223799e-002, -2.052511e-002, -2.064967e-002, -1.438437e-002, -8.168216e-003, 1.779952e-003, 7.719303e-003, 1.215536e-002, 1.949890e-002, 2.140534e-002, 1.466924e-002, 3.160051e-003, -1.016777e-002, -1.540184e-002, -9.883653e-003, 1.301396e-003, 1.338644e-002, 1.955019e-003, -1.467533e-002, -9.200964e-003, -5.785983e-004, -1.668640e-003, 4.107470e-003, 1.447742e-003, 7.273741e-003, 6.921187e-003, 1.226103e-002, 1.619966e-002, 2.977340e-002, 2.786986e-002, -2.390630e-002, 4.508507e-003, 1.505293e-002, 1.414734e-003, -2.325376e-002, -2.584282e-002, -2.606754e-003, 2.440031e-002, 2.394132e-002, -8.056459e-003, -2.540998e-002, -3.457487e-002, -3.010108e-002, -1.334216e-002, 2.787131e-003, -9.952982e-003, -2.587193e-002, -3.257628e-002, -3.462830e-002, -2.154086e-002, -5.866442e-003, 7.440622e-003, 1.829592e-002, 2.479138e-002, 3.014731e-002, 2.817981e-002, 1.556679e-002, 4.544349e-003, -3.348062e-003, -9.331121e-003, -7.322518e-003, 4.277357e-003, 6.353219e-003, -1.033449e-002, -5.502455e-002, -4.478576e-002, -2.485523e-002, -2.675390e-002, -1.721001e-002, -1.313747e-002, -1.220683e-002, -1.090701e-002, -7.004039e-003, 7.870966e-003, 1.570900e-002, -4.515760e-004, -7.079763e-002},
{-2.657292e-002, -2.042740e-003, -1.638805e-002, -1.145621e-002, -1.460603e-002, -2.577872e-002, -1.957162e-002, -4.024146e-004, 1.743776e-002, 1.734009e-002, 1.215477e-002, 1.680451e-002, 1.888217e-002, 1.316191e-002, 6.464888e-003, 9.652704e-004, 7.360537e-004, 3.329436e-003, -3.103125e-003, -3.529247e-003, -4.438769e-004, -3.267468e-004, -5.783248e-004, -3.002816e-003, -5.040913e-003, -5.039659e-003, -4.575487e-003, -2.052439e-004, 3.060815e-003, 3.002826e-003, 8.158876e-003, 1.421550e-002, 7.398909e-003, -8.408403e-003, -2.101435e-002, -2.788952e-002, -3.922457e-002, -3.535185e-002, -6.366397e-003, 1.474690e-002, 1.782238e-002, 1.396597e-002, 1.483045e-002, 9.289315e-003, -3.148016e-002, -7.560432e-002, -4.380496e-002, -4.557892e-003, -1.261075e-002, -2.201235e-003, -9.478170e-003, -1.847504e-002, 1.624278e-003, 2.494378e-002, 1.531783e-002, -3.587169e-003, -7.084926e-003, -1.054595e-003, 7.216849e-004, -4.038184e-003, -4.831084e-003, -3.683869e-003, 2.707382e-003, 3.001233e-003, -2.385234e-004, 8.593006e-004, 2.309668e-003, 5.647076e-003, 1.035894e-002, 1.241635e-002, 1.333520e-002, 1.584092e-002, 1.566918e-002, 2.023420e-002, 2.152531e-002, 1.784175e-002, 1.481330e-002, 1.717170e-002, 1.639138e-002, 1.379937e-002, 7.583052e-003, 2.367935e-003, -4.997785e-003, -1.542844e-002, -7.967613e-003, 1.171974e-002, 1.326094e-002, -6.192282e-003, -1.897255e-002, -2.682955e-002, -1.797537e-002, -7.553795e-002, -3.706452e-002, 6.007700e-003, 8.501625e-004, 5.629277e-003, -8.828826e-003, -1.385634e-003, 1.724955e-002, 1.143098e-002, -1.577132e-002, -1.588239e-002, -6.453796e-003, -8.074788e-003, -9.112307e-003, -9.032725e-003, -8.006610e-003, -1.027126e-002, -6.967213e-003, -1.075374e-002, -1.360372e-002, -1.186136e-002, -1.147139e-002, -1.027828e-002, -7.988520e-003, -3.943607e-003, 6.839043e-004, 7.125152e-003, 6.715929e-003, 4.744408e-003, -2.542910e-004, -8.137066e-004, -3.895737e-004, 1.598972e-003, 3.377350e-003, -2.935243e-003, -5.774636e-004, 3.983264e-003, 1.023383e-002, 7.747356e-003, 4.435880e-003, 1.148546e-002, 2.102195e-002, 3.633021e-003, -2.030005e-002, -2.517998e-002, -5.809879e-004, -5.728071e-002, -3.168286e-002, 1.842075e-002, 7.776416e-003, 3.043417e-003, 3.157787e-003, 1.598951e-002, 8.735328e-003, -1.152411e-002, -1.131468e-002, 1.626692e-003, 4.051721e-003, 6.017203e-003, 6.877213e-003, 9.593556e-003, 1.031747e-002, 3.969049e-003, -3.595793e-003, -8.870268e-003, -8.643443e-003, -6.115054e-003, -6.370175e-003, -6.119872e-003, -5.339659e-003, 1.017090e-003, 4.351125e-003, 1.191036e-002, 1.863213e-002, 1.517088e-002, 6.300877e-003, -2.495976e-003, -4.667533e-003, -2.136147e-003, 2.950568e-003, 5.249935e-003, -2.240637e-003, 1.954591e-003, 1.376900e-002, 1.873372e-002, 1.640929e-002, 1.378975e-002, 1.852934e-002, 5.925766e-003, -1.710520e-002, -2.407374e-002, 1.227038e-002, -3.862638e-002, -5.123610e-002, -1.750398e-003, -1.905416e-002, -2.065881e-002, -6.809617e-003, -1.075994e-002, -2.044824e-002, -1.705683e-002, -5.596857e-003, -6.362939e-003, -2.776666e-003, 2.989891e-003, 6.998366e-003, 8.442364e-003, 2.412081e-003, -1.981641e-003, -2.431734e-003, -5.697206e-003, -7.206740e-003, -1.122051e-002, -1.754613e-002, -2.627667e-002, -2.560811e-002, -1.808764e-002, -1.177117e-002, -3.265267e-003, 8.505834e-003, 1.077442e-002, 6.150043e-003, -4.531595e-003, -1.440424e-002, -2.057344e-002, -1.764389e-002, -9.854798e-003, -9.709322e-003, -1.397460e-002, -7.109290e-003, 1.470242e-004, 5.440914e-003, 1.348226e-003, 2.059286e-003, -1.218716e-002, -1.692857e-002, -2.480306e-002, 1.535222e-002, -2.573082e-002, -4.736596e-002, -6.953028e-003, -2.431838e-002, -1.469902e-002, -3.769705e-002, -4.976384e-002, -3.280822e-002, -2.314857e-002, -2.511901e-002, -2.917178e-002, -2.094389e-002, -1.438009e-002, -1.266544e-002, -1.391707e-002, -1.103676e-002, -6.682345e-003, -4.395774e-003, -5.474245e-003, -1.009233e-002, -1.946805e-002, -3.735610e-002, -5.328656e-002, -5.729111e-002, -5.193939e-002, -3.880698e-002, -2.118397e-002, -


© ISO/IEC 2004 — All rights reserved

Copyright International Organization for Standardization
Provided by IHS under license with ISO
No reproduction or networking permitted without license from IHS
Not for Resale

5.178423e-003, 2.771851e-003, 2.480881e-003, -4.272738e-003, -1.510254e-002, -2.572845e-002, -3.042185e-002, -2.688159e-002, -1.852190e-002, -1.248391e-002, -1.446495e-002, -9.547846e-003, -1.183122e-002, -1.939388e-002, -1.695474e-002, -2.891473e-002, -3.343386e-002, -3.795274e-002, -1.561894e-003, -3.912380e-002, -4.833849e-002, -5.899669e-003, -2.112324e-002, -1.459259e-002, -4.763797e-002, -3.181334e-002, -6.160391e-003, -3.588966e-003, -2.179989e-002, -1.955381e-002, -1.423929e-002, -1.300726e-002, -1.589898e-002, -5.696142e-003, 5.080862e-003, 1.359502e-002, 1.618113e-002, 1.666458e-002, 7.150048e-003, -4.717871e-003, -2.175982e-002, -3.858183e-002, -4.729117e-002, -4.400955e-002, -2.704028e-002, -7.726015e-003, 1.058202e-002, 1.852459e-002, 2.034609e-002, 1.233577e-002, 2.572145e-005, -5.943939e-003, -1.491924e-002, -2.187728e-002, -1.982263e-002, -4.161348e-003, 5.753824e-004, -2.401950e-003, -1.753648e-003, -1.224101e-002, -1.580146e-002, -1.869629e-002, -3.941173e-002, -2.858067e-002, 4.220195e-003, -2.825510e-002, -4.832654e-002, -1.972237e-003, -1.887610e-002, -1.782139e-002, -3.048655e-002, 2.451969e-003, 1.199933e-002, -1.560756e-003, -1.517295e-002, -9.144061e-003, -8.802804e-003, -1.678823e-002, -1.420220e-002, -1.227641e-003, 8.189080e-003, 1.888337e-002, 2.031408e-002, 1.752688e-002, 8.678578e-003, -1.397250e-003, -1.507880e-002, -3.099892e-002, -4.183834e-002, -4.129028e-002, -2.349764e-002, -3.991861e-003, 1.432884e-002, 2.713702e-002, 3.129243e-002, 2.731059e-002, 1.737507e-002, 6.306049e-003, 5.359327e-003, -1.190314e-003, -1.473602e-002, -8.179207e-003, 6.421956e-003, 4.676724e-003, -1.760604e-003, -3.651814e-003, -1.575688e-002, -1.004422e-002, -2.197414e-002, -1.521148e-002, 1.622385e-002, -1.107183e-002, -4.058885e-002, 4.981449e-003, -1.474596e-002, -8.180781e-003, -6.027184e-003, 1.024744e-002, 1.384578e-002, 2.692746e-003, -7.589073e-003, -8.039291e-003, -7.537129e-003, -1.783841e-002, -1.115007e-002, -4.116375e-003, 3.271617e-003, 9.880062e-003, 1.015766e-002, 2.116836e-003, -9.054462e-003, -2.084392e-002, -3.164746e-002, -4.003476e-002, -4.584417e-002, -4.344113e-002, -2.926672e-002, -1.248793e-002, 2.744092e-003, 1.547384e-002, 2.250317e-002, 2.352476e-002, 2.142537e-002, 1.433539e-002, 1.001234e-002, 6.891203e-003, 1.453682e-003, -2.454255e-003, 2.467917e-003, 9.927489e-003, 8.377927e-004, -3.456480e-003, -6.322559e-003, -6.771914e-003, -1.031594e-002, -4.475321e-003, 2.786168e-002, 9.859807e-004, -2.902222e-002, 1.069067e-002, -7.013220e-003, 8.255747e-003, 3.614777e-003, 7.915014e-003, 1.398799e-002, 2.884433e-003, -1.884983e-003, -9.795991e-004, -1.542209e-003, -1.111529e-002, -1.259816e-002, -9.454455e-003, 1.232062e-003, 1.725403e-003, -4.129591e-003, -1.669100e-002, -2.781930e-002, -3.797467e-002, -4.545434e-002, -4.732536e-002, -4.476511e-002, -4.133792e-002, -3.388376e-002, -2.453261e-002, -1.361941e-002, -1.391354e-003, 5.490805e-003, 8.091982e-003, 1.109591e-002, 1.270561e-002, 6.291834e-003, 3.238898e-003, 8.403458e-003, 1.196683e-002, 7.582819e-003, 4.587391e-003, 5.089395e-003, -6.869532e-003, 3.533543e-004, -1.764106e-003, -5.861052e-003, 7.347346e-003, 9.188979e-003, 1.091339e-002, -1.963675e-002, -1.998269e-002, 9.261772e-003, 2.394627e-002, 1.163132e-003, 4.190730e-003, 5.884337e-003, -1.310908e-003, 2.378276e-003, 3.655448e-003, 6.525283e-003, -9.727289e-003, -1.660087e-002, -9.657218e-003, 1.588864e-003, 4.716155e-003, -2.612223e-003, -1.393737e-002, -2.502579e-002, -3.045696e-002, -3.588968e-002, -3.640809e-002, -3.176684e-002, -2.735862e-002, -2.623273e-002, -2.450992e-002, -2.221206e-002, -1.365106e-002, -5.520963e-003, -2.350547e-003, 1.721852e-003, 7.132240e-003, 3.119554e-003, -2.112011e-003, 3.385841e-003, 1.933826e-002, 1.592383e-002, 8.186726e-003, 6.448624e-003, -3.318264e-003, -4.265907e-003, 3.417104e-003, -3.213935e-003, 1.008734e-002, 1.529301e-002, 1.299075e-002, -1.327439e-002, -7.010041e-003, 1.713361e-002, 2.415855e-002, -4.324139e-003, 1.738170e-003, 8.713631e-004, 1.323238e-003, -1.162866e-003, 1.001250e-003, 4.688471e-003, -1.310083e-002, -1.637991e-002, 1.024293e-004, 1.562059e-002, 2.464006e-002, 2.073180e-002, 1.252025e-002, 4.450646e-004, -6.129822e-003, -1.192334e-002, -1.373574e-002, -1.121686e-002, -9.147692e-003, -1.280978e-002, -1.861613e-002, -2.019321e-002, -1.608416e-002, -6.812372e-003, -3.029460e-003, -5.478964e-005, 8.381990e-003, 5.980049e-003, -5.125452e-003, -2.960804e-003, 1.433921e-002, 2.254643e-002, 1.124162e-002, -5.744103e-004, 1.165440e-003, -7.483152e-003, 1.767156e-003, -3.183548e-003, 5.517771e-003, 1.381318e-002, 1.317452e-002, 3.371450e-004, -1.353513e-003, 1.342966e-002, -5.279464e-003, -7.789464e-003, -6.588650e-003, 7.214466e-004, 3.233861e-003, -8.537482e-003, -2.812854e-003, -1.010488e-003, -1.286398e-002, -8.288462e-004, 2.487701e-002, 4.203615e-002, 5.157994e-002, 5.174495e-002, 3.930997e-002, 2.479688e-002, 1.868719e-002, 1.447743e-002, 1.388352e-002, 1.220218e-002, 8.307093e-003, -1.565752e-003, -6.764537e-003, -1.001759e-002, -5.949031e-003, 1.746558e-003, 6.654202e-003, 1.238980e-002, 1.691170e-002, 1.576731e-002, 3.807783e-003, -5.705342e-003, 4.880164e-003, 1.166491e-002, 8.995176e-003, -1.236791e-003, 1.254798e-004, 1.807704e-005, -2.123522e-003, 1.893673e-003, 4.024885e-003, 5.977928e-003, 7.332514e-003, 1.292359e-002, -5.164996e-003, -5.398310e-003, -1.172734e-002, -7.142112e-003, -5.890748e-003, 4.986019e-003, 2.761706e-003, -1.269619e-002, -4.591336e-003, -7.236622e-003, -5.989714e-003, 1.340035e-002, 3.999315e-002, 6.039191e-002, 7.103828e-002, 6.801667e-002, 5.328383e-002, 3.808521e-002, 3.238351e-002, 3.360953e-002, 3.537165e-002, 3.261267e-002, 2.811947e-002, 1.596972e-002, 7.299376e-003, 6.456309e-003, 6.959934e-003, 1.087930e-002, 1.685274e-002, 2.585278e-002, 3.248491e-002, 3.130787e-002, 1.978492e-002, 3.503466e-003, -2.222075e-003, -1.891835e-003, 2.445658e-003, 1.402204e-003, -1.101060e-003, 5.547294e-003, -4.254172e-003,

© ISO/IEC 2004 — All rights reserved


Copyright International Organization for Standardization
Provided by IHS under license with ISO
No reproduction or networking permitted without license from IHS
Not for Resale

2.141124e-003, 4.516046e-003, -4.203642e-003, -7.004422e-003, 2.251251e-002, -1.218289e-002, -1.965444e-002, -1.182188e-002, 2.636135e-003, -2.680701e-003, 5.268524e-003, 5.691945e-003, -9.536226e-003, -8.090421e-003, -9.793779e-003, -1.895699e-003, 1.905278e-002, 4.613930e-002, 6.284835e-002, 6.862489e-002, 6.133847e-002, 4.570174e-002, 3.487538e-002, 2.837519e-002, 3.281475e-002, 3.779116e-002, 3.939487e-002, 4.048189e-002, 3.479042e-002, 2.466769e-002, 1.920764e-002, 1.756687e-002, 1.531260e-002, 2.359114e-002, 3.396545e-002, 4.172864e-002, 4.295859e-002, 3.538588e-002, 1.734087e-002, 6.430103e-004, -1.127821e-002, -1.379254e-002, -9.317593e-004, 2.463324e-003, 6.781562e-003, -2.268455e-003, 1.954069e-003, -1.716064e-002, -1.006005e-002, -1.580926e-002, 2.723055e-002, -1.997643e-002, -2.499596e-002, -1.229503e-002, 8.881867e-003, -1.074926e-003, 9.324734e-005, 1.174422e-003, -7.865112e-003, -9.227801e-003, -1.192170e-002, -3.070728e-003, 1.517613e-002, 3.468792e-002, 3.948073e-002, 3.730665e-002, 2.717334e-002, 1.521573e-002, 1.215512e-002, 1.579174e-002, 2.504556e-002, 3.327934e-002, 3.935106e-002, 4.184469e-002, 3.804625e-002, 3.222777e-002, 2.654090e-002, 2.126305e-002, 1.396185e-002, 1.766535e-002, 2.429227e-002, 3.573330e-002, 4.040833e-002, 3.852025e-002, 2.848805e-002, 1.077211e-002, -9.537633e-003, -1.953362e-002, -5.298970e-003, 7.086407e-003, 4.860417e-003, 1.396295e-003, 5.705849e-004, -2.145368e-002, -1.196888e-002, -1.984947e-002, 3.002850e-002, -2.155191e-002, -2.319732e-002, -1.334205e-002, 1.222839e-002, -8.188060e-004, -6.276966e-003, -8.138907e-003, -7.073930e-003, -5.480357e-003, -1.038955e-002, -1.185825e-002, -5.367968e-003, 1.164685e-003, -4.462509e-003, -8.835948e-003, -1.344541e-002, -1.427400e-002, -1.084930e-002, -1.159679e-003, 1.187478e-002, 2.477975e-002, 3.359664e-002, 3.966516e-002, 3.902696e-002, 3.263512e-002, 2.324009e-002, 1.076145e-002, -3.587935e-003, -7.864904e-003, -5.450931e-003, 2.916844e-003, 1.196296e-002, 1.895270e-002, 1.739683e-002, 1.007768e-002, -1.186109e-002, -2.517783e-002, -8.478773e-003, 4.345699e-003, -6.783694e-004, 3.695802e-003, 2.206278e-003, -2.126663e-002, -8.735758e-003, -1.944157e-002, 2.953681e-002, -2.253310e-002, -1.561271e-002, -9.835855e-003, 1.294970e-002, -4.301012e-003, -1.199734e-002, -9.857517e-003, -1.231119e-003, 3.461946e-003, -8.278533e-003, -2.812734e-002, -3.010636e-002, -2.744368e-002, -2.676626e-002, -2.345005e-002, -2.443059e-002, -2.457683e-002, -2.034742e-002, -8.403954e-003, 3.981733e-003, 1.867058e-002, 2.916124e-002, 4.090977e-002, 4.244651e-002, 3.564817e-002, 1.981791e-002, 1.668641e-003, -1.368276e-002, -2.229611e-002, -2.683908e-002, -2.738307e-002, -2.087426e-002, -8.620672e-003, -2.585754e-003, -1.597798e-003, -1.329616e-002, -2.468969e-002, -8.228848e-003, -1.645321e-005, -6.591999e-003, 1.501137e-003, -2.791843e-003, -2.456091e-002, -4.353070e-003, -1.693013e-002, 2.681490e-002, -1.684332e-002, -4.056361e-003, -6.008687e-004, 1.058245e-002, -7.993243e-003, -1.447912e-002, -3.545431e-003, 9.362759e-003, 3.928498e-003, -1.155079e-002, -3.921323e-002, -4.700997e-002, -3.086704e-002, -2.996108e-003, 1.722513e-002, 1.943560e-002, 1.639617e-002, 6.744775e-003, 1.735126e-003, 8.053600e-003, 1.889770e-002, 2.811669e-002, 3.761484e-002, 4.166966e-002, 3.730768e-002, 2.434733e-002, 9.139954e-003, -4.590894e-003, -1.081608e-002, -1.239101e-002, -1.139608e-002, -1.429209e-002, -1.430738e-002, -4.735280e-003, -5.093501e-003, -1.387506e-002, -2.248197e-002, -8.662106e-003, -6.281635e-003, -1.663514e-002, -5.278810e-003, -5.522580e-003, -2.439738e-002, 1.763493e-003, -1.176361e-002, 1.919845e-002, -4.127834e-003, 9.480320e-003, 4.320012e-003, 4.478067e-003, -1.172349e-002, -1.398994e-002, -4.336480e-004, 5.948568e-003, -1.699082e-003, -2.714478e-002, -5.846788e-002, -6.478093e-002, -4.324230e-002, -1.263257e-002, 7.437942e-003, 1.863871e-002, 1.958481e-002, 1.713628e-002, 1.249228e-002, 9.177210e-003, 1.825890e-002, 2.282321e-002, 3.055657e-002, 3.313271e-002, 2.953139e-002, 1.372778e-002, -3.890373e-003, -1.442279e-002, -1.501800e-002, -6.086051e-003, -1.048775e-002, -2.042497e-002, -3.105306e-002, -2.478553e-002, -9.801148e-003, -1.525014e-002, -2.023781e-002, -8.594580e-003, -1.581432e-002, -2.677326e-002, -1.031802e-002, -4.175873e-003, -1.836365e-002, 1.152308e-002, -3.938652e-003, 1.457106e-002, 7.528012e-003, 1.502578e-003, 1.460839e-002, 4.136021e-003, -1.106913e-002, -1.336261e-002, -8.354173e-003, -2.777465e-003, -8.091218e-003, -3.520216e-002, -7.024024e-002, -6.977467e-002, -3.752983e-002, -8.646504e-003, 1.205865e-002, 1.321667e-002, 3.622821e-003, -5.212296e-003, -1.387404e-002, -1.172853e-002, 1.113957e-002, 2.576663e-002, 3.074842e-002, 2.876965e-002, 1.459127e-002, -1.091728e-002, -2.617479e-002, -2.402548e-002, -1.105279e-002, -3.486845e-004, -7.978418e-003, -2.405965e-002, -4.437872e-002, -5.563283e-002, -3.840729e-002, -2.115384e-002, -2.294777e-002, -1.417231e-002, -1.706855e-002, -3.681196e-002, -1.032939e-002, 1.367404e-003, -8.834424e-003, 2.899109e-002, 7.282290e-003, -2.363446e-002, 1.346072e-002, 1.375362e-002, 1.960111e-002, 1.468308e-004, -7.908123e-003, -7.540454e-003, -1.648551e-002, -1.082219e-002, -2.115551e-003, -2.908534e-002, -5.653825e-002, -3.450164e-002, -5.311535e-003, 8.448260e-003, 1.632035e-002, 1.370092e-002, 9.763279e-003, 5.336402e-004, -1.798992e-002, -1.920987e-002, 9.363484e-003, 3.344788e-002, 3.704562e-002, 2.851287e-002, 1.325310e-002, -1.060126e-002, -1.773570e-002, -7.849346e-003, 7.206016e-003, 2.445027e-002, 2.817625e-002, 2.125489e-002, 2.947447e-003, -1.715240e-002, -2.325269e-002, -1.167928e-002, -1.531336e-002, -1.507397e-002, -1.601862e-002, -3.877874e-002, -5.838033e-003, -6.819487e-004, -4.755713e-003, 3.825945e-002, 1.275643e-002, -2.511828e-002, 1.575684e-002, 1.566077e-002, 1.543264e-002, -5.453203e-003, -3.586346e-004, 6.620190e-003, -8.544003e-003, -6.272800e-003, 5.388827e-003, -2.653833e-003, -7.387392e-003,


© ISO/IEC 2004 — All rights reserved

Copyright International Organization for Standardization
Provided by IHS under license with ISO
No reproduction or networking permitted without license from IHS
Not for Resale

9.609036e-003, 9.468403e-003, 1.320343e-003, -1.669673e-002, -2.361851e-002, -3.641621e-003, 2.163931e-003, -3.526524e-003, 4.681922e-003, 2.143186e-002, 3.330230e-002, 3.330073e-002, 2.691363e-002, 2.451128e-002, 8.071982e-003, 2.597004e-003, -7.364092e-003, -1.660806e-002, -1.883666e-002, -2.541301e-003, 1.971618e-002, 3.182645e-002, 2.619834e-002, 1.501663e-002, 7.576882e-003, 2.037715e-004, -3.735736e-003, -4.062175e-003, -2.186540e-002, 1.965931e-003, -4.534635e-003, -4.457017e-003, 2.033586e-002, -4.181078e-003, -1.946290e-002, 1.857899e-002, 8.059667e-003, -1.241586e-003, -1.470823e-002, -2.198767e-005, 7.913082e-003, 4.151725e-003, -4.631557e-003, 1.040194e-002, 2.604076e-002, 4.364553e-002, 3.040748e-002, 1.208699e-002, 1.650667e-002, -3.583372e-002, -4.292930e-002, 1.769820e-002, 1.981933e-002, 5.648189e-003, 2.194051e-002, 4.173002e-002, 2.416146e-002, 1.610961e-002, 1.268161e-002, 2.523069e-002, 1.726140e-002, 1.899297e-002, -1.291197e-003, -2.030074e-002, -5.599505e-002, -3.648191e-002, -1.513234e-002, 1.296302e-002, 4.902045e-002, 4.954330e-002, 3.219476e-002, 1.231806e-002, 1.415121e-002, 1.604195e-002, -1.239194e-003, 1.539380e-002, -1.204754e-003, 2.657883e-003, 1.664468e-002, -1.125650e-002, 4.478249e-003, 1.905587e-002, -9.915250e-003, -1.966739e-002, -2.582544e-002, -5.386290e-003, 7.096391e-003, -8.204162e-003, -2.774941e-002, 2.399092e-003, 1.887203e-002, 2.766811e-002, -1.599609e-003, -6.220604e-003, 2.174060e-002, -4.629315e-002, -3.530312e-002, 3.462393e-002, 2.446472e-002, 1.020184e-002, 2.976712e-002, 4.338565e-002, 7.733315e-003, -7.425792e-003, 2.225082e-003, 2.065428e-002, 2.430512e-002, 2.688348e-002, 2.472578e-002, 3.910168e-003, -4.087323e-002, -2.620804e-002, -1.634390e-003, -1.484053e-002, 2.092843e-002, 4.492239e-002, 3.518850e-002, 1.169576e-002, 1.986555e-003, 1.076482e-002, -4.164448e-003, 7.430264e-003, -6.231944e-003, 3.085880e-003, 2.511383e-003, 1.386408e-003, 7.719117e-003, 2.129990e-002, -1.383353e-002, -1.672520e-002, -8.698269e-003, -3.717080e-004, -4.535035e-003, -9.154868e-003, -2.823338e-002, 1.989802e-003, 9.024631e-003, 5.530073e-003, -1.478832e-002, -7.944902e-003, 1.542846e-002, 8.680528e-003, 9.738739e-003, 1.746003e-002, 9.024305e-003, 3.417224e-003, 3.489745e-002, 3.326816e-002, -1.574150e-003, -1.892797e-002, -6.666784e-003, 1.211960e-002, 1.977110e-002, 1.482296e-002, 1.672492e-002, 1.969597e-002, 6.972037e-003, 8.211107e-003, 9.468532e-003, -8.993883e-003, -6.087953e-003, 1.063979e-002, 7.315666e-003, -1.053818e-002, -2.713869e-002, -8.793458e-003, -1.625346e-002, -1.152357e-002, -4.184644e-003, 8.718240e-003, -1.239365e-002, -3.777257e-003, 1.059655e-002, 2.107346e-002, -1.637954e-002, -5.971974e-003, 3.357177e-003, 1.297551e-003, -1.179771e-002, -5.327193e-003, -1.619473e-002, 8.645174e-003, 9.816437e-003, 3.130312e-003, -6.287305e-003, -2.843403e-003, 6.185997e-003, 9.722259e-003, 8.373068e-003, 2.939556e-003, -7.930908e-003, 2.946234e-005, 3.928848e-002, 2.618000e-002, -7.848258e-003, -2.430095e-002, -9.285023e-003, 8.863985e-003, 8.941354e-003, 1.321090e-003, 6.937426e-003, 1.378881e-002, 1.525333e-002, 1.545421e-002, 8.227304e-003, -7.116507e-003, -7.822450e-003, -2.552569e-003, -8.288213e-004, -1.467193e-002, -2.691620e-002, -1.257534e-002, -2.213495e-002, -2.272653e-002, -2.674659e-003, 1.653403e-002, -1.119707e-002, -2.159679e-003, 1.392163e-002, 1.964089e-002, -1.681934e-002, 5.367334e-003, 9.394138e-003, -3.707537e-003, -2.124473e-002, -6.613047e-003, -4.308724e-003, 1.384365e-002, 1.451453e-002, 5.578978e-003, 1.585571e-003, 4.619637e-003, 8.769483e-003, 8.906099e-003, -3.410747e-004, -1.163943e-002, -1.016049e-002, 2.070089e-002, 4.994748e-002, 2.923110e-002, -9.254056e-004, -1.257797e-002, -2.374396e-003, 1.551268e-002, 1.140016e-002, -2.318976e-003, -5.443963e-003, 5.683705e-003, 1.356783e-002, 1.462992e-002, 8.105715e-003, -6.246745e-004, 4.871048e-004, 2.634253e-003, -4.991954e-004, -1.021430e-002, -1.651443e-002, -5.065051e-003, -1.761328e-002, -1.629495e-002, 3.330842e-004, 2.144871e-002, -1.091590e-002, 3.944242e-004, 1.192369e-002, 1.500974e-002, -1.786226e-002, 1.385184e-002, 9.349715e-003, -7.120653e-003, -2.234888e-002, -7.254414e-003, 5.591211e-003, 1.859813e-002, 1.390024e-002, 5.235988e-003, 1.441998e-003, 2.945540e-003, 3.163743e-003, -6.259409e-004, -9.485809e-003, -1.135190e-002, 5.244966e-003, 4.163833e-002, 5.520190e-002, 3.769862e-002, 1.659896e-002, 8.877212e-003, 7.929944e-003, 2.443496e-002, 2.218080e-002, 2.703792e-004, -1.064202e-002, -5.493339e-003, 5.579280e-003, 8.918410e-003, 7.527732e-003, 5.060803e-003, 6.161352e-003, 5.067057e-003, 1.848741e-003, -1.931816e-003, -1.554591e-002, -4.644383e-003, -1.132265e-002, -6.665532e-003, 7.694581e-003, 1.862366e-002, -1.456729e-002, 2.862141e-002, 1.065765e-002, -3.562839e-002, -2.172438e-002, 1.937286e-002, 5.129301e-003, -3.612404e-003, -1.455571e-002, -2.845379e-003, 8.762349e-003, 2.458838e-002, 2.166723e-002, 4.422688e-003, -8.207374e-003, -1.223773e-002, -1.383826e-002, -2.045106e-002, -2.416265e-002, -1.488718e-002, 1.739235e-002, 5.005633e-002, 5.168492e-002, 3.403208e-002, 2.467034e-002, 1.896695e-002, 1.278492e-002, 2.615261e-002, 3.806233e-002, 1.624259e-002, -1.381020e-002, -1.978441e-002, -1.752371e-002, -1.317243e-002, -1.018057e-002, -6.075147e-003, -2.680207e-003, 6.797395e-003, 9.159416e-003, 6.370701e-003, -1.214184e-002, -1.358175e-003, -6.512587e-004, 1.059840e-002, 1.499420e-002, 1.645046e-002, -1.636174e-002, 3.805938e-002, 3.108927e-002, -4.292159e-002, -2.578356e-002, 1.422596e-002, 6.362500e-003, -4.756452e-003, 9.743408e-003, -2.102496e-004, 5.102398e-003, 3.128991e-002, 2.705773e-002, 1.143694e-002, -9.520060e-003, -2.189963e-002, -2.342015e-002, -2.861947e-002, -2.162246e-002, -4.935059e-004, 3.401090e-002, 5.078398e-002, 2.517470e-002, 7.428303e-003, 1.469419e-002, 8.381123e-003, 7.765963e-003, 2.559043e-002, 5.330843e-002, 4.547703e-002,

© ISO/IEC 2004 — All rights reserved


Copyright International Organization for Standardization
Provided by IHS under license with ISO
No reproduction or networking permitted without license from IHS
Not for Resale

4.555409e-003, -1.701815e-002, -2.625664e-002, -2.521851e-002, -1.933840e-002, -1.121058e-002, 4.428952e-004, 1.541222e-002, 1.829691e-002, 1.143439e-002, -3.198257e-003, 9.583498e-003, 6.877093e-003, 1.330020e-002, 5.088793e-003, 7.995847e-003, -1.475018e-002, 7.734634e-003, 3.072652e-002, -3.986722e-002, -2.424005e-002, 1.197603e-002, 3.412866e-003, -1.075876e-003, 2.683071e-002, 5.013645e-003, -2.979527e-003, 2.588030e-002, 3.226480e-002, 1.885747e-002, -3.250874e-005, -1.265136e-002, -1.752346e-002, -1.563709e-002, 3.603504e-004, 2.342766e-002, 4.368452e-002, 2.889469e-002, -3.870674e-003, -1.898531e-002, 1.569213e-003, 7.848777e-003, 6.180627e-003, 1.884033e-002, 5.791166e-002, 6.483121e-002, 3.224280e-002, 7.118431e-004, -1.698413e-002, -2.167895e-002, -1.601748e-002, -5.647980e-003, 9.809549e-003, 2.058905e-002, 1.854072e-002, 1.556970e-002, 4.670665e-003, 1.748766e-002, 9.286382e-003, 1.735378e-004, -2.899266e-003, 4.564402e-003, -1.340352e-002, -7.074821e-004, 2.717450e-002, -3.483022e-002, -1.059644e-002, 1.445622e-002, 7.571590e-004, -8.401123e-004, 3.281143e-002, 1.253602e-002, -7.152513e-003, 2.108027e-002, 2.971918e-002, 2.181724e-002, 1.037146e-002, -1.721318e-003, -3.339951e-003, 9.247381e-003, 2.890819e-002, 4.348640e-002, 3.235202e-002, 1.733933e-002, 1.055536e-002, -6.283648e-003, -5.218856e-004, 1.510261e-002, 1.455389e-002, 1.260501e-002, 4.181986e-002, 6.290015e-002, 4.914870e-002, 2.074383e-002, 8.611255e-004, -1.016266e-002, -5.731748e-003, 4.966744e-003, 1.598386e-002, 2.172594e-002, 2.154338e-002, 1.797723e-002, 1.345217e-002, 2.550860e-002, 1.943825e-003, -1.070646e-002, -6.529166e-003, -2.083756e-003, 1.881957e-003, -2.475656e-003, 2.719749e-002, -2.837353e-002, 2.060686e-003, 1.423612e-002, -3.604305e-003, -3.639057e-003, 3.428046e-002, 2.017200e-002, -6.464946e-003, 1.645171e-002, 2.504675e-002, 2.096794e-002, 1.493829e-002, 8.548670e-003, 9.823416e-003, 2.419519e-002, 3.942331e-002, 3.211422e-002, 6.530375e-003, 9.968565e-003, 4.624600e-004, -3.021979e-002, -2.511465e-002, -1.108242e-002, -1.091792e-002, -2.247384e-002, -6.534366e-003, 2.029031e-002, 2.827533e-002, 2.194651e-002, 1.065198e-002, 2.844739e-003, 6.186361e-003, 1.478838e-002, 2.126495e-002, 2.338231e-002, 2.322040e-002, 1.488503e-002, 1.113799e-002, 1.291246e-002, -5.049585e-003, -8.535299e-003, -2.823023e-003, -2.688928e-003, 2.572789e-003, -4.330439e-003, 2.716071e-002, -1.984050e-002, 1.190507e-002, 2.243787e-002, -3.540946e-003, -7.789160e-003, 3.173470e-002, 2.230051e-002, -8.460867e-003, 1.261730e-002, 2.208031e-002, 1.969274e-002, 1.626803e-002, 1.738447e-002, 2.129150e-002, 3.201830e-002, 3.111566e-002, -8.468612e-004, -1.419731e-002, 3.368208e-003, -7.518182e-003, -3.378000e-002, -3.608626e-002, -3.111943e-002, -2.971278e-002, -3.758295e-002, -4.196605e-002, -3.382295e-002, -2.046913e-002, 1.619337e-003, 9.430451e-003, 1.281853e-002, 1.744000e-002, 2.355386e-002, 2.586783e-002, 2.697991e-002, 2.227057e-002, 7.753752e-003, 1.491687e-003, 1.884403e-003, 5.173010e-003, 1.052631e-002, 1.233670e-002, 1.245567e-003, 1.047092e-002, 1.492293e-003, 2.384694e-002, -1.618737e-002, 1.342762e-002, 3.985881e-002, 1.372794e-002, -3.717720e-003, 2.700386e-002, 2.301866e-002, -9.605194e-003, 7.848445e-003, 2.094342e-002, 1.941418e-002, 1.604609e-002, 2.716429e-002, 3.120199e-002, 2.680627e-002, -3.654563e-003, -4.068478e-002, -3.880845e-002, -2.266696e-002, -1.943001e-002, -1.441424e-002, -1.164382e-002, -2.461433e-002, -3.992102e-002, -5.065148e-002, -6.386002e-002, -7.204532e-002, -6.605382e-002, -3.500019e-002, -6.509229e-003, 1.580150e-002, 2.905238e-002, 3.201607e-002, 2.858799e-002, 2.716020e-002, 1.498416e-002, -2.948968e-003, -6.667159e-003, 1.143229e-002, 2.714314e-002, 2.890309e-002, 1.548232e-002, 3.556452e-004, 2.077274e-002, 1.296745e-002, 2.327521e-002, -1.175776e-002, 1.372401e-002, 4.033876e-002, 2.806025e-002, -4.934900e-003, 9.807587e-003, 1.273674e-002, -1.692486e-002, 4.605204e-004, 1.762311e-002, 1.675257e-002, 1.567491e-002, 2.939262e-002, 2.850641e-002, 4.290197e-003, -3.960585e-002, -6.555806e-002, -6.499665e-002, -5.028943e-002, -2.983545e-002, -1.076098e-002, -5.841691e-003, -2.407251e-002, -3.900377e-002, -4.864344e-002, -6.995958e-002, -9.165892e-002, -9.227954e-002, -6.995917e-002, -2.894114e-002, 1.165836e-002, 2.989832e-002, 3.661286e-002, 2.901108e-002, 2.225911e-002, 4.618423e-003, -1.384575e-002, -2.650974e-003, 1.948875e-002, 3.682482e-002, 3.084386e-002, 1.400879e-002, 1.046081e-003, 1.999884e-002, 2.074287e-002, 2.110759e-002, 1.352291e-003, 7.148714e-003, 2.259108e-002, 1.600610e-002, -4.730158e-003, 4.694539e-003, -7.547294e-004, -2.599868e-002, -1.140978e-002, 1.360329e-002, 1.162538e-002, 9.315186e-003, 1.865532e-002, 1.651048e-002, -1.712275e-002, -5.649064e-002, -7.266795e-002, -7.058606e-002, -5.357780e-002, -3.414292e-002, -5.695268e-003, 1.138711e-003, -1.739276e-002, -2.793133e-002, -3.450499e-002, -5.060239e-002, -7.255660e-002, -8.166499e-002, -7.159883e-002, -3.733426e-002, 8.688062e-003, 2.974070e-002, 3.520848e-002, 2.811042e-002, 1.344096e-002, -1.166410e-003, -1.450406e-002, -5.293147e-003, 7.856230e-003, 1.320841e-002, 1.244405e-002, 4.692722e-003, -1.159437e-004, 1.527893e-002, 1.882091e-002, -2.182256e-002, 7.036585e-003, -2.492969e-003, 2.713065e-003, 3.380413e-004, -3.109614e-003, 3.989984e-003, -3.807359e-003, -2.843165e-002, -1.521828e-002, 9.285805e-003, 4.589142e-003, -5.052187e-003, -2.533074e-004, 8.587512e-004, -2.266594e-002, -5.491486e-002, -7.227165e-002, -7.053790e-002, -5.426295e-002, -3.247426e-002, -1.194244e-002, -7.226429e-003, -1.349491e-002, -2.224241e-002, -3.021821e-002, -3.535959e-002, -4.085078e-002, -3.898733e-002, -3.181165e-002, -1.615991e-002, 1.258623e-002, 2.831999e-002, 3.062197e-002, 2.122359e-002, 5.279560e-003, -9.784794e-003, -1.389023e-002, -1.430869e-002, -1.841278e-002, -1.516026e-002, -9.665800e-003, -7.614444e-003, -5.655423e-003,


© ISO/IEC 2004 — All rights reserved

--`,,```,,,,````-`-`,,`,,`,`,,`---

Copyright International Organization for Standardization
Provided by IHS under license with ISO
No reproduction or networking permitted without license from IHS
Not for Resale

1.201343e-002, 1.783056e-002, -3.103204e-002, 3.569501e-003, -9.265604e-004, -2.754888e-003, -7.331890e-003, -5.598781e-003, -8.748321e-004, 1.782866e-003, -1.804296e-002, -9.778682e-003, 1.149265e-002, -2.314498e-003, -1.667509e-002, -1.416237e-002, -3.637403e-003, -1.057036e-002, -3.160668e-002, -6.274659e-002, -6.138306e-002, -4.111044e-002, -1.899472e-002, -1.653916e-003, 1.107947e-003, 1.260094e-003, -6.766065e-003, -3.072318e-002, -4.990893e-002, -5.090937e-002, -3.354386e-002, -2.573838e-003, 1.673716e-002, 1.526142e-002, 1.923667e-002, 1.997029e-002, 9.602896e-003, -4.429558e-003, -1.607414e-002, -9.227551e-003, -1.702647e-002, -2.832373e-002, -2.652414e-002, -1.458105e-002, -1.376104e-002, -1.275430e-002, 2.586549e-002, 1.139255e-002, -2.792670e-002, 9.431707e-003, 1.577378e-003, -5.774867e-003, -1.104115e-002, -7.128874e-003, -2.181260e-003, 3.952968e-003, -6.668424e-003, 1.845438e-003, 1.577717e-002, -2.738145e-003, -2.316635e-002, -2.474239e-002, -5.965034e-003, 1.924460e-003, -2.462031e-002, -6.092035e-002, -6.492885e-002, -3.740118e-002, -8.311325e-003, 9.411319e-003, 9.045921e-003, 6.790175e-003, -2.124614e-004, -1.979888e-002, -4.527212e-002, -6.023648e-002, -4.735881e-002, -8.692288e-003, 1.667030e-002, 1.075384e-002, 8.758553e-003, 7.613078e-003, 4.902840e-004, -7.997282e-003, -9.953747e-003, -1.598625e-003, -1.434641e-002, -2.034201e-002, -1.611079e-002, -1.451431e-003, -7.384263e-003, -1.450246e-002, 1.656210e-002, 7.739319e-003, -1.520013e-002, 1.951620e-002, 9.649759e-004, -9.515455e-003, -1.498679e-002, -8.890388e-003, -3.174375e-003, 5.227707e-003, 4.935776e-003, 9.108341e-003, 1.683139e-002, 3.495293e-003, -2.210007e-002, -2.901842e-002, -1.312635e-002, -4.220652e-003, -3.082534e-002, -5.862831e-002, -5.351174e-002, -2.805122e-002, -3.676925e-003, 1.244534e-002, 1.505280e-002, 1.310995e-002, 8.808713e-003, -1.376643e-003, -1.792129e-002, -3.126146e-002, -2.775492e-002, -1.410181e-002, -3.221962e-003, -5.514513e-004, -1.950271e-003, -2.416296e-003, -3.132998e-003, -1.574720e-003, 5.983561e-003, 1.051003e-002, -5.529823e-003, 4.899415e-003, 1.488612e-002, 1.647700e-002, -4.598849e-003, -7.229419e-003, 8.702316e-003, 6.984677e-003, -7.156330e-003, 2.511611e-002, 4.554178e-003, -8.814980e-003, -2.165556e-002, -1.640252e-002, -1.198335e-002, -1.107827e-003, 1.241288e-002, 1.336442e-002, 1.665859e-002, 1.107451e-002, -1.031903e-002, -2.858339e-002, -2.239182e-002, -1.133557e-002, -2.294211e-002, -3.447079e-002, -3.188958e-002, -1.801027e-002, -5.758088e-003, 8.476306e-004, 3.421241e-004, -2.841114e-003, -2.425379e-003, -4.077103e-003, -7.219191e-003, -1.103310e-002, -1.038490e-002, -7.638759e-003, -1.317017e-002, -1.615467e-002, -1.832519e-002, -1.511591e-002, -6.724421e-003, 1.729389e-003, 1.289131e-002, 1.339130e-002, 1.674322e-003, 1.529710e-002, 2.263896e-002, 1.379039e-002, -1.072399e-002, -1.448623e-002, 6.382744e-003, 1.066800e-002, -4.695508e-003, 2.197736e-002, 6.505326e-003, 1.462766e-003, -1.314528e-002, -1.645583e-002, -1.078963e-002, -2.940442e-003, 1.048982e-002, 1.216566e-002, 1.491900e-002, 1.918164e-002, 4.899600e-003, -1.289003e-002, -1.870336e-002, -5.568052e-003, 1.149905e-003, -4.842544e-003, -1.318428e-002, -9.214133e-003, -5.607965e-003, -5.200693e-003, -7.913416e-003, -9.140752e-003, -7.784475e-003, -6.117002e-003, -3.999747e-003, -4.049667e-003, -6.610219e-003, -1.061593e-002, -2.204076e-002, -3.105678e-002, -2.995571e-002, -1.733010e-002, -4.015108e-003, 1.067053e-002, 2.043059e-002, 9.895040e-003, 5.610723e-003, 1.475321e-003, 7.274657e-003, 8.398411e-003, -1.669630e-002, -2.230722e-002, 7.088350e-003, 1.164156e-002, -1.371945e-003, 2.145987e-002, 6.101727e-003, 8.579555e-003, -2.152902e-003, -8.057862e-003, -1.181833e-002, -6.430440e-003, 3.680794e-003, 8.007473e-003, 5.709750e-003, 1.414061e-002, 9.515187e-003, -8.159754e-004, -6.774145e-003, 7.817388e-003, 1.571252e-002, 9.543769e-003, -4.366364e-003, -1.077196e-002, -1.096462e-002, -1.322482e-002, -1.336228e-002, -1.459292e-002, -1.025784e-002, -5.119098e-003, -3.032075e-003, -2.225752e-003, -6.873622e-003, -1.640028e-002, -3.060277e-002, -3.550260e-002, -2.896734e-002, -1.422679e-002, 1.681359e-003, 1.961432e-002, 1.735721e-002, 1.011960e-003, 3.141984e-003, -4.433081e-003, -1.944872e-003, 9.433028e-003, -1.259396e-002, -2.767490e-002, -3.509360e-003, 1.772064e-003, 9.867266e-003, 2.486871e-002, 2.128671e-002, 1.265011e-002, 1.044468e-002, 2.889407e-003, 2.560793e-004, -8.413909e-006, -5.089643e-003, 1.496734e-003, -2.730255e-003, 3.323107e-003, 4.576483e-003, -2.392681e-004, -4.034807e-003, 1.354976e-002, 2.082882e-002, 1.318091e-002, -4.124839e-004, -1.554172e-002, -2.365373e-002, -2.461384e-002, -2.264933e-002, -1.821772e-002, -9.685407e-003, -8.745783e-004, 1.591019e-003, -2.972654e-003, -9.733831e-003, -1.719955e-002, -2.596080e-002, -2.298524e-002, -1.817747e-002, -7.283351e-003, 8.083814e-003, 1.312709e-002, 1.294625e-002, 1.203959e-002, 1.184677e-002, -6.007145e-003, -6.304861e-003, 1.282906e-002, 4.079065e-004, -2.656725e-002, -1.573327e-002, -1.155724e-002, 1.844728e-002, 2.306776e-002, 1.143211e-002, -2.272980e-003, -1.698700e-003, 6.767669e-003, 1.854521e-002, 1.027477e-002, -7.811277e-003, -2.639336e-003, -7.437540e-004, -1.219093e-002, -6.750757e-003, -8.128689e-003, -7.358418e-003, 8.147092e-003, 2.157148e-002, 1.747540e-002, 7.448562e-003, -9.479758e-003, -2.370901e-002, -2.419304e-002, -1.846117e-002, -1.045129e-002, -4.103172e-003, 3.698658e-003, 3.632518e-003, -3.298848e-003, -7.037053e-003, -9.520050e-003, -1.186193e-002, -7.046770e-003, -4.009815e-003, 8.343169e-003, 9.637246e-003, 3.442199e-003, 3.630812e-003, 2.115966e-002, 2.205491e-002, -5.515012e-003, -9.077439e-003, 1.967418e-002, 1.834631e-002, -8.023394e-003, -9.582220e-003, -1.399970e-002, 4.389985e-003, 4.105716e-003, -1.170336e-002, -2.169708e-002, -1.572729e-002, 8.016600e-003, 1.622493e-002, 2.000089e-003, -8.280083e-003, -5.329930e-004, -4.945742e-003, -2.178611e-002, -2.485889e-002, -2.101429e-002, -

© ISO/IEC 2004 — All rights reserved


Copyright International Organization for Standardization
Provided by IHS under license with ISO
No reproduction or networking permitted without license from IHS
Not for Resale

1.831955e-002, -7.437305e-003, 5.533611e-003, 1.382595e-002, 1.112064e-002, -1.356739e-003, -1.390965e-002, -1.913821e-002, -1.649481e-002, -9.881276e-003, -3.656961e-003, 1.998776e-003, 3.905289e-003, -1.524815e-004, 5.775483e-004, 2.125038e-003, 1.961099e-003, 4.840639e-003, 8.158210e-003, 1.682995e-002, 8.362783e-003, -9.208551e-003, -1.301341e-002, 9.073666e-003, 1.052187e-002, -1.454622e-002, -1.218303e-002, 2.092960e-002, 2.421025e-002, 5.349700e-003, 8.619278e-003, -1.215218e-003, -1.428852e-002, -6.677551e-003, -2.011072e-002, -2.663912e-002, -2.096318e-002, -3.149500e-004, 1.658866e-003, -6.161061e-003, -1.280105e-002, -6.589384e-003, -1.316874e-002, -2.677735e-002, -2.825460e-002, -2.280841e-002, -2.234640e-002, -1.872019e-002, -6.920409e-003, -9.985484e-004, 1.375493e-003, -1.094741e-003, -1.018811e-002, -1.959548e-002, -2.616200e-002, -2.373337e-002, -1.352341e-002, -6.302465e-003, 5.121978e-004, 1.105559e-003, 1.417112e-003, 2.758067e-003, -7.826616e-004, 1.931666e-003, 4.738914e-003, 5.082681e-003, 9.818876e-004, -2.551682e-002, -3.702325e-002, -1.426022e-002, -1.110851e-002, -3.777276e-002, -2.513035e-002, 1.842373e-002, 1.283341e-002, -6.618573e-003, 8.270884e-003, 2.847930e-004, 1.896634e-002, 3.076374e-002, 1.437552e-002, 1.273867e-002, 2.083475e-002, 2.474859e-002, 2.137985e-002, 2.022943e-002, 2.147688e-002, 1.745769e-002, 1.175682e-002, 2.242132e-002, 2.445096e-002, 2.406418e-002, 2.619750e-002, 1.980256e-002, 2.140308e-002, 2.051514e-002, 1.320854e-002, 1.463421e-002, 1.251499e-002, -3.494100e-005, -1.328093e-002, -1.349523e-002, -1.135942e-002, -5.654120e-003, -2.164066e-003, -2.347920e-003, -3.866722e-003, -3.782660e-003, -1.911691e-003, 3.228822e-003, 6.927733e-003, 4.936846e-003, 1.472682e-004, -2.145828e-002, -3.605460e-002, -1.438172e-002, -7.835914e-003, -3.697603e-002, -2.917710e-002, 1.366969e-002, 8.705624e-003, -2.312813e-002, -2.804375e-003, -2.411722e-003, 1.449855e-002, 1.509409e-002, 1.809563e-003, -1.975873e-004, -2.423112e-004, -9.450125e-003, 3.042446e-003, 7.310131e-003, 8.822253e-003, -2.937540e-003, -1.664729e-003, 2.298373e-002, 2.265140e-002, 1.396251e-002, 1.453035e-002, 6.296479e-003, -2.977783e-003, -8.106817e-003, -2.304196e-002, -2.353693e-002, -2.176947e-002, -2.769585e-002, -3.651112e-002, -3.977625e-002, -3.961448e-002, -3.570886e-002, -3.010911e-002, -2.575050e-002, 1.791334e-002, 1.297875e-002, 1.371339e-002, 2.282786e-002, 2.955596e-002, 2.622114e-002, 3.314691e-002, 2.170246e-002, 8.016038e-003, 2.618243e-002, 3.770101e-002, 1.530740e-002, 2.195394e-002, 3.494584e-002, 2.443647e-002, -3.882731e-003, 1.456064e-002, 9.600456e-003, 1.038998e-002, -9.115923e-004, -1.985918e-003, 3.403303e-003, -3.355960e-003, -1.283140e-002, 2.769331e-003, 2.678026e-003, 1.426078e-003, 2.536036e-003, 6.560053e-003, 3.057343e-002, 2.879332e-002, 1.113921e-002, 1.053443e-002, 9.991776e-003, 4.876279e-003, -3.256454e-003, -4.594690e-003, -6.583326e-003, -4.966090e-003, -2.885608e-003, -8.629578e-005, 2.218151e-003, 6.039445e-003, 6.281336e-003, 2.262946e-003, -1.640174e-003, -5.132616e-003, -4.025217e-003, 4.744621e-003, 6.958947e-003, 4.506544e-003, 1.049707e-003, 2.206770e-002, 1.180046e-002, -7.024603e-003, 1.176355e-002, 1.744989e-002, 1.035860e-002, 1.706503e-002, 1.728291e-002, 7.413681e-003, 7.448115e-003, 6.953359e-003, -3.900525e-003, 3.347495e-003, -2.566758e-003, -4.194721e-003, 1.083779e-002, 4.137928e-003, -9.494582e-003, -4.421961e-003, -1.247900e-002, -9.691922e-003, 7.237516e-003, 4.950013e-003, 1.847285e-002, 1.565641e-002, -6.027118e-004, -3.132006e-003, -5.739241e-003, -5.148317e-003, -6.825437e-003, -9.515622e-003, -1.066151e-002, -6.674503e-003, 1.851615e-005, 6.837943e-003, 8.666015e-003, 7.210410e-003, -3.533631e-004, -9.901704e-003, -1.615546e-002, -1.728227e-002, -6.738604e-003, 2.779535e-003, 3.382884e-004, -1.178057e-002, -1.307479e-002, 1.340488e-002, 4.771680e-003, -2.218939e-002, -5.490159e-003, -3.372996e-003, -6.035027e-003, -4.213594e-003, -5.774051e-003, -1.611861e-002, -3.704182e-003, 5.762763e-003, -5.014542e-003, 1.225989e-003, 3.376044e-003, 3.849267e-003, 2.523259e-002, 9.855604e-003, -4.041410e-004, 4.523974e-003, -4.932514e-003, -5.952083e-003, 1.675545e-002, 8.065556e-003, 4.470017e-003, 3.808805e-003, -2.802938e-003, -1.004803e-002, -1.062414e-002, -7.025782e-003, -4.745781e-003, -4.612301e-003, -7.093867e-003, 3.600888e-004, 1.056900e-002, 1.569910e-002, 1.450928e-002, 8.059711e-003, -3.237801e-003, -1.150751e-002, -1.644323e-002, -1.303953e-002, -5.178402e-003, 3.052025e-003, -8.996441e-004, -9.042046e-003, -9.746086e-003, 9.045185e-003, -2.877783e-003, -2.870649e-002, -9.203833e-003, -2.950815e-003, -1.599838e-002, -1.839586e-002, -2.087902e-002, -3.228617e-002, -1.576948e-002, -4.120590e-004, -1.035980e-002, 1.638114e-003, -7.129271e-004, 9.224756e-004, -2.799266e-003, -1.320977e-002, -1.226883e-002, -6.873422e-003, -2.428018e-002, -2.669265e-002, -1.728084e-002, -2.140338e-002, -3.132585e-002, -2.245448e-002, -2.207564e-002, -1.699018e-002, -1.519795e-002, -1.315654e-002, -1.217242e-002, -1.383926e-002, -1.323202e-002, -9.085947e-003, -2.567350e-003, -2.918393e-004, -3.392519e-003, -9.972725e-003, -1.472776e-002, -1.602463e-002, -1.179650e-002, -5.163908e-003, 3.518995e-003, 1.355238e-002, 8.316007e-003, 7.183161e-003, 2.165678e-002, 4.351834e-002, 2.975186e-002, 8.663874e-003, 3.239757e-002, 3.487619e-002, 1.541344e-002, 4.481947e-003, 7.787125e-003, 4.259227e-003, 2.156630e-002, 2.900914e-002, 1.992795e-002, 6.663870e-003, 7.010233e-003, 9.923073e-003, 1.574639e-002, 2.615072e-002, 4.062333e-002, 4.738231e-002, 2.917841e-002, 2.499215e-002, 1.510981e-002, 8.691294e-003, -1.018170e-005, 1.855613e-003, 6.503522e-003, 6.331324e-003, -3.834457e-004, -4.012678e-003, -1.203164e-002, -1.763359e-002, -2.050230e-002, -2.049912e-002, -1.766696e-002, -1.762279e-002, -2.088120e-002, -2.496069e-002, -2.702547e-002, -2.661503e-002, -2.384196e-002, -1.930041e-002, -1.869324e-002, -


--`,,```,,,,````-`-`,,`,,`,`,,`---

© ISO/IEC 2004 — All rights reserved

Copyright International Organization for Standardization
Provided by IHS under license with ISO
No reproduction or networking permitted without license from IHS

Not for Resale

2.394748e-002, -2.899367e-002, -2.558251e-002, -2.766826e-002, -1.304861e-002, -1.770358e-002, -2.220976e-002, 1.104283e-002, 1.693572e-002, 6.920365e-003, 7.403731e-004, 4.656899e-003, 2.545766e-003, 5.805810e-003, 1.205261e-002, 1.611580e-003}, {6.191379e-002, 4.075972e-002, 1.857344e-002, 9.019563e-003, 1.101995e-002, 2.504029e-002, 2.296982e-002, 1.106738e-002, 3.016509e-003, 3.096609e-003, 2.445772e-003, 4.530256e-003, 8.704273e-003, 7.758868e-003, 5.544590e-003, 6.365083e-003, 2.383961e-003, 3.652630e-003, 1.891405e-003, 1.723331e-003, -3.967618e-004, -1.330503e-003, 9.019317e-004, 2.866433e-003, 6.520455e-003, 1.505863e-002, 1.718098e-002, 1.469953e-002, 1.040129e-002, 4.475801e-003, 3.406015e-004, -6.902101e-003, -8.616570e-003, 2.184584e-003, 1.229034e-002, 1.337447e-002, 6.850247e-003, -1.129378e-002, -3.166160e-002, -2.971387e-002, -1.055476e-002, -9.137524e-003, -7.038903e-003, -3.951471e-004, 2.833437e-002, 5.684282e-002, 4.422073e-002, 1.091058e-002, -9.681662e-003, -1.443676e-002, -1.084723e-002, -1.640217e-003, -1.151103e-002, -2.248284e-002, -2.370697e-002, -2.398075e-002, -1.894294e-002, -9.026090e-003, -6.724369e-003, -1.000351e-002, -1.592346e-002, -1.579615e-002, -9.043602e-003, 1.479241e-003, 1.035363e-002, 7.146272e-003, 3.776275e-004, -2.576196e-003, -4.509127e-003, -7.402648e-003, -2.822197e-003, 7.100896e-003, 1.568662e-002, 1.896652e-002, 1.251806e-002, -1.193736e-004, -1.153191e-002, -1.598499e-002, -1.800721e-002, -1.253826e-002, -1.527226e-003, 7.865611e-003, 1.438396e-002, 1.095981e-002, -1.158471e-002, -1.640592e-002, 1.084064e-002, 2.343307e-002, 2.057052e-002, 2.346160e-002, 2.701380e-002, 6.194687e-002, 3.421095e-002, 5.734536e-004, -1.520545e-002, -8.856011e-003, 1.066338e-003, 3.235851e-003, -4.100826e-003, -5.324245e-003, -8.415242e-003, -7.260262e-003, 6.251759e-003, 1.135740e-002, 4.170756e-003, -4.811696e-003, -1.006342e-002, -2.720416e-003, 8.193683e-003, 1.233333e-002, 9.352573e-003, 2.923327e-003, -7.391365e-004, -6.308143e-003, -1.097481e-002, -1.379432e-002, -5.505502e-003, 4.636239e-003, 1.676036e-002, 2.478742e-002, 2.573026e-002, 2.290997e-002, 8.762350e-003, -1.343764e-002, -2.309249e-002, -2.163568e-002, -1.147239e-002, -4.417881e-003, -6.779588e-003, -1.333076e-003, -8.779717e-003, -2.382739e-002, -1.059874e-002, 1.753798e-002, 2.136174e-002, 2.117615e-002, 1.342417e-002, 4.837054e-002, 2.706552e-002, -8.980050e-003, -9.490550e-003, 1.943810e-003, 1.109421e-002, 6.307544e-003, 4.156971e-003, 5.878487e-003, -1.116127e-003, 5.167869e-003, 1.000536e-002, 5.651174e-003, -3.374453e-003, -1.050974e-002, -8.099315e-003, -7.237896e-003, -4.967934e-003, -7.292897e-003, -4.113025e-003, -5.102841e-003, -6.303016e-003, -7.979413e-003, -1.347817e-002, -1.678089e-002, -1.173329e-002, -7.016655e-003, -4.430480e-004, 7.288202e-003, 1.209100e-002, 1.072346e-002, 8.459152e-003, -1.011823e-003, -1.462494e-002, -2.824741e-002, -2.285769e-002, -9.607160e-003, -8.704921e-003, -1.423197e-002, -4.578541e-003, -4.859936e-003, -1.553334e-002, 1.134130e-002, 2.970837e-002, 2.012101e-002, 1.349733e-003, 3.380729e-002, 3.928311e-002, 6.683519e-003, 1.138265e-002, 2.976990e-002, 2.849968e-002, 2.152824e-002, 2.865597e-002, 2.374949e-002, 1.352205e-002, 1.430305e-002, 1.596049e-002, 9.238429e-003, -7.344393e-004, -7.924915e-003, -1.378425e-002, -1.432596e-002, -1.027316e-002, -2.153207e-003, 1.148622e-003, 2.004943e-003, 1.608835e-003, 1.374280e-003, -5.175090e-003, -8.687546e-003, -9.716942e-003, -1.087513e-002, -7.701200e-003, -2.272620e-003, 9.985344e-004, -5.388349e-005, -8.250066e-003, -8.382344e-003, -8.000726e-003, -1.365531e-002, -1.849842e-002, -9.425337e-003, 3.401694e-003, -1.818460e-003, -2.258076e-003, 1.489994e-002, 5.448367e-003, 1.406922e-002, 2.809659e-002, 2.048083e-002, -8.828366e-003, 1.982385e-002, 3.631891e-002, 8.078663e-003, 1.435021e-002, 2.842580e-002, 4.079800e-003, 7.129106e-003, 7.050112e-003, -3.855816e-003, -1.125204e-002, -4.671401e-003, 1.012560e-003, -8.209843e-003, -1.668035e-002, -2.253443e-002, -2.078587e-002, -1.695176e-002, -9.365734e-003, -3.213660e-003, 2.937554e-003, 9.328133e-003, 5.747042e-003, -1.874116e-004, -8.286656e-003, -1.395137e-002, -1.804186e-002, -1.852397e-002, -1.290948e-002, -7.941305e-003, -7.486928e-003, -7.887555e-003, -1.779607e-002, -2.893400e-002, -2.950160e-002, -2.102845e-002, -1.798601e-002, -1.799584e-002, 8.965601e-004, 7.640041e-003, -7.159206e-003, 4.758111e-003, 1.444926e-002, 7.743684e-003, 1.065794e-002, 1.543606e-002, -2.290774e-002, 1.782629e-003, 3.602350e-002, 2.179758e-003, 1.398547e-002, 2.120911e-002, -1.695392e-003, 2.987602e-003, -3.984285e-003, -1.064607e-002, -9.921905e-003, 3.735444e-003, 2.381982e-003, -6.407392e-003, -4.371405e-003, -4.463483e-003, -5.330147e-003, -3.556027e-003, 6.479510e-003, 1.108652e-002, 1.790426e-002, 2.113334e-002, 1.916714e-002, 1.067250e-002, 7.412215e-005, -6.126785e-003, -9.361343e-003, -1.093842e-002, -4.416599e-003, -9.334762e-004, 3.221500e-003, 2.832335e-003, -3.465193e-003, -2.036451e-002, -3.075658e-002, -2.852584e-002, -1.889912e-002, -7.914458e-003, -1.364422e-004, 1.418454e-002, 6.957932e-003, -9.932941e-004, 1.635555e-002, 5.865867e-003, 1.023984e-002, 1.467831e-002, -2.211432e-002, -7.473785e-003, 3.223409e-002, -2.659474e-003, 9.932750e-003, 1.427763e-002, -4.077409e-004, 1.083600e-003, -2.608502e-003, -2.764247e-003, 9.848804e-004, 7.065305e-003, 5.015516e-003, 5.854636e-003, 1.071814e-002, 7.882373e-003, 2.932672e-003, 5.715215e-003, 1.210051e-002, 1.411347e-002, 2.377981e-002, 2.913840e-002, 2.768952e-002, 1.684315e-002, 5.382756e-003, -3.145093e-003, -9.063441e-003, -1.277292e-002, -8.045189e-003, -5.543178e-003, 1.896817e-003, 1.032338e-002, 1.312473e-002, -7.118442e-005, -1.827032e-002, -2.546868e-002, -1.981676e-002, -3.959737e-003, 6.779308e-003, 1.347766e-002, 1.461222e-002, 3.369445e-003, 1.435223e-002, 4.594616e-003, 1.483074e-003, 6.834616e-003, -1.778360e-002, -4.235044e-003,

© ISO/IEC 2004 — All rights reserved


Copyright International Organization for Standardization
Provided by IHS under license with ISO
No reproduction or networking permitted without license from IHS
Not for Resale

2.389436e-002, -1.095460e-002, 3.932865e-003, 9.131739e-003, 1.101013e-003, 3.594194e-003, 4.049644e-003, 4.917669e-003, 4.056568e-003, 1.046344e-002, 8.691626e-003, 1.184113e-002, 9.935073e-003, 1.328259e-003, -2.433659e-003, -1.282392e-003, 6.167700e-003, 1.302848e-002, 2.516684e-002, 3.070621e-002, 2.458792e-002, 1.472226e-002, 3.369038e-003, -5.625143e-003, -1.177713e-002, -1.944607e-002, -2.034468e-002, -2.009093e-002, -1.402810e-002, -9.636441e-004, 1.472294e-002, 1.787828e-002, -7.830884e-004, -1.708256e-002, -1.589943e-002, -8.952878e-004, 1.893015e-002, 1.987795e-002, 1.629700e-002, 8.415375e-003, 1.317282e-002, 6.656593e-003, 2.799253e-003, -1.410526e-003, -1.391709e-002, 1.921632e-003, 1.461597e-002, -1.583586e-002, 2.744190e-004, 6.892935e-003, 1.740636e-003, 3.985487e-003, 6.028195e-003, 5.459401e-003, 3.493953e-003, 9.554863e-003, 1.202811e-002, 5.168502e-003, -6.268618e-003, -1.516019e-002, -1.878060e-002, -1.359204e-002, -1.536127e-003, 1.341134e-002, 2.955472e-002, 3.687145e-002, 2.946210e-002, 1.935932e-002, 7.589280e-003, -3.726125e-004, -7.037759e-003, -1.324510e-002, -1.856684e-002, -2.095890e-002, -1.908191e-002, -1.032841e-002, 6.425671e-003, 2.054000e-002, 9.694933e-003, -9.278028e-003, -1.212763e-002, 3.845888e-004, 2.381253e-002, 3.133074e-002, 1.865670e-002, 1.038357e-002, 1.140291e-002, 1.702283e-002, 5.766362e-003, -1.402734e-004, 1.622187e-002, 1.030415e-002, 8.794231e-003, 1.271202e-003, -5.776897e-003, 3.729478e-003, -2.504444e-003, 5.809363e-003, 1.454714e-003, 3.386545e-003, 4.040091e-003, 5.144168e-003, 5.083778e-003, -1.267492e-002, -2.664257e-002, -2.702126e-002, -2.221079e-002, -1.154746e-002, 6.627474e-003, 2.636737e-002, 4.579084e-002, 4.955830e-002, 3.657940e-002, 3.051774e-002, 2.145034e-002, 1.261923e-002, 9.297184e-003, 1.678458e-003, -3.478017e-003, -6.237555e-003, -9.367812e-003, -6.558132e-003, 2.883337e-003, 1.662758e-002, 1.271798e-002, -2.973639e-003, -1.140837e-002, -1.523447e-003, 1.846749e-002, 2.936563e-002, 1.756861e-002, 8.103634e-003, 4.263241e-003, 2.009318e-002, 1.109639e-002, -4.102610e-003, 1.305664e-002, 1.721903e-002, 4.719969e-003, -1.818751e-003, -6.021902e-003, -6.017631e-004, -4.792001e-003, -3.364151e-003, -1.419356e-003, 5.587758e-003, 6.538984e-004, 4.773914e-004, -7.925614e-003, -2.908778e-002, -3.242860e-002, -2.402614e-002, -1.320488e-002, -1.578168e-003, 1.935295e-002, 3.780648e-002, 5.048366e-002, 4.951256e-002, 4.104565e-002, 3.917817e-002, 3.212884e-002, 2.554212e-002, 2.462302e-002, 1.803335e-002, 1.181505e-002, 9.488470e-003, 5.293775e-003, 7.660232e-003, 1.142644e-002, 1.797686e-002, 1.489776e-002, 2.477747e-003, -1.075801e-002, -3.847370e-003, 1.536184e-002, 2.025271e-002, 1.211951e-002, 5.823103e-005, -5.827506e-003, 1.139192e-002, 1.591089e-002, -7.951758e-005, 1.230144e-002, 1.585779e-002, -2.285995e-003, -4.390895e-003, -1.929307e-003, -2.507872e-002, -6.874291e-003, -9.941407e-003, 5.304964e-004, 3.838394e-003, -5.633891e-004, -4.539624e-003, -1.754331e-002, -3.010195e-002, -1.783743e-002, -8.873712e-003, 1.405269e-003, 8.424826e-003, 2.152766e-002, 3.544356e-002, 4.260604e-002, 4.070108e-002, 3.698038e-002, 3.620635e-002, 3.226560e-002, 3.143310e-002, 3.249414e-002, 2.971584e-002, 2.320182e-002, 1.788895e-002, 1.519342e-002, 1.796105e-002, 2.327834e-002, 2.262158e-002, 1.793964e-002, 6.124663e-003, -8.648138e-003, -7.859764e-003, 1.094225e-002, 1.402861e-002, 2.887232e-003, -5.451715e-003, -9.033115e-003, -1.091642e-003, 1.461850e-002, 8.033919e-003, 1.104175e-002, 1.001204e-002, -8.159376e-003, -2.383011e-003, 4.134373e-003, -2.667190e-002, -7.832813e-003, -1.037425e-002, 1.653063e-003, 2.278860e-003, 4.145881e-003, -3.837670e-003, -1.397220e-002, -1.084403e-002, 3.261590e-003, 6.831984e-003, 7.685468e-003, 8.871955e-003, 9.244523e-003, 1.726257e-002, 2.149054e-002, 2.105448e-002, 1.971079e-002, 2.141795e-002, 2.097143e-002, 2.154773e-002, 2.482651e-002, 2.374451e-002, 1.709589e-002, 1.425094e-002, 1.396927e-002, 1.704714e-002, 2.333340e-002, 2.375555e-002, 2.043985e-002, 1.086368e-002, -5.055303e-003, -1.397592e-002, 3.359612e-003, 9.224895e-003, -7.741890e-003, -1.436254e-002, -6.717248e-003, -7.705241e-003, 1.236105e-002, 1.548987e-002, 1.027156e-002, -1.616021e-003, -9.916319e-003, 3.777374e-003, 7.724318e-003, -2.128006e-002, 7.446283e-007, -6.950436e-004, 7.110172e-003, 3.713557e-003, 8.709207e-003, -1.737492e-003, 1.099400e-003, 1.590674e-002, 2.224896e-002, 1.509865e-002, 4.809760e-003, -4.159938e-003, -1.211413e-002, -8.317328e-003, -5.281000e-004, 3.183545e-003, 4.434740e-003, 3.902620e-003, 4.615690e-003, 5.086545e-003, 7.912233e-003, 6.405789e-003, 1.596245e-003, -2.054205e-003, 8.677708e-004, 2.178038e-003, 7.852753e-003, 1.465507e-002, 1.324862e-002, 5.541278e-003, -8.485534e-003, -2.052269e-002, -7.011368e-003, 7.638458e-003, -1.710261e-002, -2.137151e-002, -6.852445e-003, -1.072978e-002, 8.734395e-003, 2.397831e-002, 1.355394e-002, -9.209109e-003, -8.293324e-003, 7.762415e-003, 1.200815e-002, -1.053093e-002, 9.543081e-003, 5.387596e-003, 1.190102e-002, 6.024207e-003, 9.183920e-003, 6.196006e-003, 1.651963e-002, 3.269650e-002, 2.834827e-002, 1.238655e-002, -4.159588e-003, -1.809193e-002, -2.929082e-002, -2.750809e-002, -1.773685e-002, -8.944072e-003, -4.802789e-003, -6.979917e-003, -7.895070e-003, -8.345164e-003, -8.010764e-003, -9.487110e-003, -1.432087e-002, -1.949411e-002, -1.639403e-002, -1.268356e-002, -6.861163e-003, -4.629008e-004, 1.736533e-003, -3.955506e-003, -1.685389e-002, -2.458036e-002, -1.422767e-002, 1.436905e-003, -1.868661e-002, -2.649040e-002, -7.070527e-003, -1.493968e-002, -2.264114e-003, 1.789245e-002, 1.596613e-002, -6.200514e-003, -6.149886e-003, 9.328141e-003, 1.407160e-002, -4.301793e-003, 1.533834e-002, 7.890114e-003, 1.349159e-002, 3.732018e-003, 3.837839e-003, 8.616172e-003, 1.344126e-002, 2.601065e-002, 1.689684e-002, -2.000082e-003, -1.989939e-002, -2.879795e-002, -


© ISO/IEC 2004 — All rights reserved

Copyright International Organization for Standardization
Provided by IHS under license with ISO
No reproduction or networking permitted without license from IHS
Not for Resale

3.324403e-002, -2.712541e-002, -1.531325e-002, -2.468344e-003, 4.122249e-003, -4.045689e-003, -9.898742e-003, -1.191720e-002, -1.451844e-002, -1.645652e-002, -1.830105e-002, -2.450186e-002, -2.567949e-002, -2.164974e-002, -1.467295e-002, -1.272950e-002, -1.047348e-002, -1.283873e-002, -1.975842e-002, -2.471051e-002, -1.361356e-002, -1.078186e-004, -1.312344e-002, -1.853643e-002, -4.569847e-003, -1.108340e-002, -1.470119e-002, 3.281058e-003, 1.818841e-002, 2.634309e-004, -4.548749e-003, 6.494339e-003, 1.069479e-002, -7.468898e-004, 2.106350e-002, 8.969318e-003, 6.751045e-003, -3.032894e-003, 2.946078e-004, -4.181792e-003, -1.072102e-002, 2.308146e-004, -2.630244e-003, -1.690924e-002, -2.693831e-002, -2.830431e-002, -2.218739e-002, -9.356711e-003, 5.879163e-003, 2.304010e-002, 3.011407e-002, 1.876895e-002, 8.012113e-003, 1.494052e-003, -7.839960e-004, -4.507290e-003, -4.727403e-003, -7.863694e-003, -1.097864e-002, -5.975386e-003, -3.688533e-004, -2.639932e-003, -3.733074e-003, -1.077047e-002, -2.299525e-002, -2.928168e-002, -1.759437e-002, -3.768265e-003, -7.877031e-003, -6.457675e-003, 7.523268e-003, 1.707797e-003, -2.070751e-002, -1.405949e-002, 1.022677e-002, 3.753344e-003, -5.812175e-003, 2.308771e-003, 2.355120e-003, 3.378481e-003, 2.075482e-002, 1.016465e-002, -4.144451e-003, -1.245908e-002, -1.175167e-002, -2.648677e-002, -3.538167e-002, -1.811903e-002, -3.715259e-003, -1.173574e-002, -2.521480e-002, -3.878773e-002, -3.662874e-002, -2.553320e-002, -4.521945e-004, 3.023350e-002, 5.012595e-002, 4.661790e-002, 3.510865e-002, 2.717707e-002, 3.045657e-002, 2.815777e-002, 1.787244e-002, 1.015131e-002, 3.075663e-003, 3.618243e-004, 5.503090e-004, -4.466458e-003, -1.061199e-002, -1.640349e-002, -3.083549e-002, -4.084765e-002, -3.170384e-002, -1.407907e-002, -6.706785e-003, 2.512736e-003, 2.380496e-002, 1.112600e-002, -2.013189e-002, -2.486808e-002, -1.861148e-003, 2.080828e-003, -7.257528e-003, -3.359317e-003, -9.832242e-004, 6.466762e-003, 1.932130e-002, 9.076043e-003, -1.179243e-002, -1.985354e-002, -1.473554e-002, -3.613554e-002, -4.285868e-002, -8.465252e-003, 9.525279e-003, -5.122266e-003, -2.645328e-002, -5.338936e-002, -7.358107e-002, -7.535582e-002, -5.665910e-002, -1.004287e-002, 3.783202e-002, 5.541102e-002, 5.536962e-002, 5.159583e-002, 5.540149e-002, 4.771221e-002, 1.855548e-002, -3.078423e-003, -1.675737e-002, -3.192623e-002, -4.043419e-002, -4.430248e-002, -3.981743e-002, -3.221462e-002, -3.517369e-002, -5.592292e-002, -5.046310e-002, -2.302872e-002, -3.799537e-003, 1.046218e-002, 2.853323e-002, 1.780161e-002, -1.294694e-002, -2.599167e-002, -1.204864e-002, -1.711316e-003, -6.611419e-003, -9.723615e-003, -2.671140e-002, 4.379815e-003, 1.374337e-002, 7.643842e-003, -1.365895e-002, -1.794259e-002, -1.243663e-002, -3.603858e-002, -2.974932e-002, 2.143591e-002, 2.689804e-002, 5.923217e-003, -6.492284e-003, -2.042190e-002, -3.427985e-002, -3.439909e-002, -2.187400e-002, 8.315616e-003, 4.877366e-002, 5.958907e-002, 5.900772e-002, 5.416508e-002, 5.917708e-002, 5.821861e-002, 3.283063e-002, 6.091251e-003, -1.504825e-002, -3.130357e-002, -2.794999e-002, -1.691106e-002, -2.346338e-003, 1.203916e-002, 1.693626e-002, -5.561346e-003, -4.178694e-002, -2.807193e-002, 2.603888e-003, 1.580755e-002, 2.176601e-002, 1.773969e-002, -7.082452e-004, -1.942761e-002, -1.290812e-002, -4.220245e-003, 6.907864e-003, -8.796221e-003, -2.874319e-002, 1.156044e-003, 1.462842e-003, 5.995178e-003, -5.816509e-003, -8.601155e-003, 1.717475e-003, -1.674389e-002, -1.443404e-002, 2.322615e-002, 2.005843e-002, -8.878970e-003, -2.854405e-002, -3.621748e-002, -3.074906e-002, -9.022457e-003, 3.008558e-002, 6.508757e-002, 8.769645e-002, 7.361885e-002, 5.035125e-002, 3.973927e-002, 5.183673e-002, 6.243932e-002, 4.965923e-002, 2.712018e-002, -8.162447e-003, -3.662093e-002, -5.258217e-002, -5.214833e-002, -3.782366e-002, -7.771292e-003, 2.386453e-002, 2.967219e-002, 2.230125e-003, -6.805543e-003, 1.296004e-002, 2.066743e-002, 1.856278e-002, 2.020942e-002, 1.561806e-002, -1.095567e-002, -1.221055e-002, -1.096622e-002, 4.230695e-003, -6.761883e-003, -2.306997e-002, 4.612186e-003, -1.068507e-003, 1.196434e-003, 5.172954e-003, 8.915289e-003, 2.339752e-002, 1.026754e-002, -6.783643e-003, 3.525829e-003, 6.265945e-003, -1.637623e-002, -4.709622e-002, -5.642376e-002, -4.578013e-002, -2.907859e-002, 6.528035e-003, 6.358011e-002, 9.364199e-002, 7.360379e-002, 3.582144e-002, 2.736735e-002, 4.015141e-002, 5.504340e-002, 4.078039e-002, 1.681036e-002, -1.854564e-002, -4.837535e-002, -8.477681e-002, -1.043126e-001, -9.911823e-002, -6.577404e-002, -2.688540e-002, 6.388929e-003, 2.661117e-002, 2.793276e-002, 2.713383e-002, 1.813094e-002, 1.063036e-003, 1.438956e-002, 2.224860e-002, -1.053460e-002, -1.706184e-002, -8.267641e-003, 1.762986e-004, -2.600650e-003, -1.000893e-002, 1.305325e-002, -2.065179e-003, -6.038409e-003, 1.278638e-002, 2.342465e-002, 3.256614e-002, 3.700899e-002, 9.781198e-003, 5.319272e-003, 1.426739e-002, 3.281026e-002, 1.407697e-002, -1.545777e-002, -1.528626e-002, 1.354666e-002, 1.620580e-002, 3.336777e-002, 7.530014e-002, 6.085372e-002, 2.071736e-002, 2.329530e-002, 3.798749e-002, 4.920233e-002, 2.379696e-002, 1.009381e-002, 1.800117e-002, 2.752536e-002, -2.467549e-002, -4.577730e-002, -6.238696e-003, -3.545920e-002, -5.584132e-002, -1.620035e-002, 2.485694e-002, 3.142826e-002, 2.206005e-002, 5.815003e-003, -2.197878e-002, -3.085540e-005, 1.278465e-002, -8.733649e-003, -1.530861e-002, -1.318051e-002, 4.097622e-003, 8.927948e-003, -1.719802e-004, 8.518175e-003, -1.550714e-002, -1.814137e-002, 8.655367e-003, 2.620604e-002, 2.686513e-002, 3.892910e-002, 2.006709e-002, -6.488993e-003, -2.154038e-002, -7.055693e-003, -1.053626e-003, -3.016845e-002, -3.826591e-002, -1.551437e-002, -9.445043e-003, -1.665998e-003, 4.316271e-002, 4.642863e-002, 6.370828e-003, 8.214844e-003, 3.516574e-002, 4.528713e-002, 3.099930e-003, -2.728748e-002, -3.797067e-002, -1.282596e-002, -3.541525e-002, -4.723116e-002,

© ISO/IEC 2004 — All rights reserved


Copyright International Organization for Standardization
Provided by IHS under license with ISO
No reproduction or networking permitted without license from IHS
Not for Resale

8.580981e-003, 2.741074e-003, -4.742249e-002, -2.527043e-002, 1.630058e-002, 2.853316e-002, 1.553822e-002, -6.432133e-004, -2.948095e-002, -1.331678e-002, 1.179360e-003, -3.255886e-003, -1.439756e-002, -1.167274e-002, 3.876311e-003, 1.691067e-002, 8.568407e-003, 1.241393e-002, -1.245482e-002, -1.832332e-002, 3.218847e-003, 1.421617e-002, 4.277809e-004, 1.677466e-002, 7.691887e-003, -1.374570e-002, -1.806404e-002, -1.583970e-002, -2.146459e-002, -3.201799e-002, -3.822230e-002, -4.401111e-002, -4.317925e-002, -1.038078e-002, 3.030929e-002, 3.256402e-002, -4.004763e-003, -1.651124e-003, 2.282138e-002, 4.484666e-002, -4.210927e-003, -3.629372e-002, -5.793654e-002, -5.950487e-002, -4.928488e-002, -4.412068e-002, -1.691386e-002, -5.243465e-003, -1.826993e-002, -1.258215e-002, 1.730485e-002, 1.774897e-002, -2.299548e-004, -7.243486e-003, -2.228353e-002, -1.898703e-002, -8.122508e-005, 3.488774e-003, -1.296579e-002, -1.788239e-002, -1.092561e-003, 1.783172e-002, 1.075524e-002, 1.692345e-002, 2.926869e-003, -6.789909e-003, 1.289863e-003, 2.665529e-003, -2.019098e-002, -1.105715e-002, -4.966802e-003, -1.020503e-002, -1.061108e-003, 6.720195e-003, -2.309987e-003, -1.383786e-002, -2.879455e-002, -3.822903e-002, -3.575375e-002, -1.316843e-002, 1.892751e-002, 2.127717e-002, -5.055753e-003, -2.706672e-003, 1.187251e-002, 4.894721e-002, 9.218597e-003, -3.868240e-002, -4.793081e-002, -4.547541e-002, -3.424995e-002, -1.749722e-002, 6.872384e-003, 2.127225e-002, 1.040198e-002, 6.108796e-003, 1.486748e-002, -3.103566e-003, -1.539287e-002, -9.324774e-004, -1.354964e-002, -1.414651e-002, -1.029261e-003, 1.534319e-002, -6.994922e-003, -1.699067e-002, -1.171655e-002, 1.410031e-002, 1.358818e-002, 2.174106e-002, 1.921694e-002, 3.264671e-003, 7.482503e-003, -7.323641e-004, -2.548320e-002, -2.247745e-002, -9.861699e-003, -1.282644e-002, -1.478259e-003, 5.232393e-003, -3.135641e-003, -1.338338e-002, -2.388215e-002, -2.958861e-002, -1.910044e-002, -1.008333e-003, 1.823169e-002, 1.118788e-002, -3.624817e-003, -6.156011e-003, 2.885933e-004, 3.608332e-002, 3.610534e-002, -8.355849e-003, -3.115655e-002, -2.861962e-002, -1.605326e-002, 4.800910e-003, 2.643772e-002, 3.905792e-002, 3.431178e-002, 2.151818e-002, 1.059289e-002, -1.554811e-002, -2.367115e-002, 3.687114e-003, 2.986011e-004, -5.395553e-003, 3.300112e-003, 2.733627e-002, 1.901796e-003, -1.275223e-002, -2.062898e-002, 9.277414e-003, 1.677891e-002, 2.079349e-002, 1.926911e-002, 8.701980e-003, 1.450223e-002, 8.256282e-006, -2.353877e-002, -2.429699e-002, -1.728351e-002, -1.403604e-002, -6.518216e-003, -4.592715e-003, -1.111228e-002, -1.744725e-002, -2.115083e-002, -1.618450e-002, 2.142639e-003, 1.883678e-002, 1.283617e-002, 1.061666e-003, -3.159740e-003, -8.690649e-003, -5.106233e-003, 2.434963e-002, 5.225849e-002, 3.293775e-002, 7.111466e-004, -9.399986e-003, -3.386058e-003, 9.811947e-003, 2.552075e-002, 3.709664e-002, 3.921036e-002, 2.440744e-002, 2.042320e-003, -2.052772e-002, -2.448708e-002, 4.705847e-003, 5.399991e-003, 7.910019e-004, 1.366622e-003, 2.576705e-002, 5.122332e-003, 6.275861e-004, -2.309040e-002, -6.099023e-003, 1.575383e-002, 1.230033e-002, 1.251748e-002, 1.018999e-002, 3.421904e-003, -5.207831e-003, -2.164128e-002, -2.709630e-002, -2.042243e-002, -1.701619e-002, -6.242002e-003, -6.057400e-003, -7.756801e-003, -1.035262e-002, -6.025227e-003, 7.456489e-003, 2.798346e-002, 2.567655e-002, 6.684063e-003, 4.463087e-003, 8.657765e-003, 1.703751e-003, -4.145662e-003, 9.479459e-003, 5.153428e-002, 6.639356e-002, 3.510184e-002, 9.750969e-003, 3.752458e-003, 9.702132e-003, 2.061611e-002, 2.922178e-002, 3.076423e-002, 2.300428e-002, -6.644643e-005, -2.096817e-002, -2.287257e-002, 6.744141e-005, 1.193186e-002, 6.755673e-003, -2.132481e-003, 1.957840e-002, 8.260524e-003, 3.545569e-003, -3.254006e-002, -1.091480e-002, 1.022903e-002, 9.793302e-004, -5.933070e-004, 2.496209e-003, -7.062363e-003, -8.082815e-003, -1.221595e-002, -1.988526e-002, -1.514017e-002, -7.335003e-003, -1.493983e-003, 3.093041e-004, -2.103870e-003, 1.003699e-003, 9.723191e-003, 2.407526e-002, 3.908532e-002, 3.199474e-002, 1.405427e-002, 2.431083e-002, 4.042399e-002, 3.651438e-002, 1.447808e-002, 9.513249e-003, 4.226884e-002, 8.425986e-002, 6.471403e-002, 3.009476e-002, 1.306982e-002, 1.126814e-002, 1.445091e-002, 2.306388e-002, 3.097513e-002, 2.222287e-002, -2.825408e-004, -1.810675e-002, -1.719146e-002, -4.607716e-003, 4.174254e-003, -6.658955e-004, -1.080721e-002, 9.463294e-003, 5.569820e-003, 6.127189e-004, -3.091933e-002, -1.131515e-002, 8.202766e-003, -1.059874e-002, -1.880326e-002, -1.297043e-003, -8.126479e-004, -5.617332e-003, -7.471770e-003, -1.530267e-002, -8.125320e-003, -9.002779e-004, 4.577004e-003, 5.144703e-003, 5.653993e-003, 9.886912e-003, 2.032169e-002, 3.375369e-002, 4.346071e-002, 3.787329e-002, 3.414812e-002, 5.186578e-002, 7.147546e-002, 6.899769e-002, 4.242651e-002, 2.821665e-002, 3.597167e-002, 7.207462e-002, 7.439749e-002, 4.336253e-002, 2.199958e-002, 1.490669e-002, 1.529205e-002, 2.130658e-002, 2.886885e-002, 2.184477e-002, 2.327614e-003, -9.299088e-003, -1.209149e-002, -9.529226e-003, -5.474002e-003, -9.696651e-003, -1.863106e-002, -7.111630e-004, -4.029753e-003, -2.593387e-002, -2.555689e-002, -7.321496e-003, 2.442562e-003, -2.155675e-002, -2.810519e-002, -7.242691e-003, 6.034784e-003, -3.206199e-004, -5.989657e-003, -8.802093e-003, -2.695943e-003, 8.563956e-004, 3.849750e-003, 2.714658e-003, -7.866957e-004, 4.271160e-003, 2.109478e-002, 3.112397e-002, 3.621485e-002, 3.020060e-002, 3.080331e-002, 6.173266e-002, 7.447628e-002, 5.707509e-002, 2.537882e-002, 1.474773e-002, 2.371447e-002, 4.237986e-002, 5.861573e-002, 4.095822e-002, 1.805590e-002, 7.333310e-003, 9.457502e-003, 1.759367e-002, 2.469921e-002, 1.943664e-002, 3.788576e-003, -1.514886e-003, -1.163539e-002, -1.408591e-002, -2.795042e-003, -1.339179e-002, -1.983162e-002, -1.029850e-003, -7.516940e-003, -2.716912e-002, -1.713401e-002, -4.467661e-003, -


© ISO/IEC 2004 — All rights reserved

Copyright International Organization for Standardization
Provided by IHS under license with ISO
No reproduction or networking permitted without license from IHS
Not for Resale

7.848267e-004, -2.610069e-002, -3.135943e-002, -9.504310e-003, 1.151342e-002, 1.267341e-003, -8.024264e-003, -5.134759e-003, 2.505718e-003, 4.227291e-003, 5.150967e-003, 2.707826e-003, -3.412080e-004, 8.009553e-003, 2.060366e-002, 2.395037e-002, 1.729580e-002, 6.157915e-003, 1.604096e-002, 5.062024e-002, 5.482518e-002, 3.703288e-002, 8.964969e-003, 3.694371e-003, 1.565143e-002, 2.709185e-002, 3.887678e-002, 3.303103e-002, 1.553657e-002, 1.419133e-003, 1.955450e-003, 1.029490e-002, 1.977670e-002, 1.573121e-002, 6.134562e-003, 4.779344e-003, -1.159297e-002, -2.150398e-002, 1.608581e-003, -9.006956e-003, -8.966372e-003, 1.967093e-003, -7.657570e-003, -3.072166e-002, -1.078256e-002, -4.547985e-003, -1.551006e-003, -2.255883e-002, -2.247677e-002, -7.831438e-003, 5.632380e-003, 4.630363e-003, -5.939518e-003, -4.695744e-003, 6.284774e-003, 7.256030e-003, 2.401053e-003, 8.193729e-004, 3.560832e-003, 1.010274e-002, 8.222656e-003, -2.268105e-003, -1.216038e-002, -9.824517e-003, 1.216805e-002, 4.015434e-002, 4.174923e-002, 2.769020e-002, 9.766800e-003, 1.195786e-002, 2.067433e-002, 1.791029e-002, 1.851936e-002, 2.090647e-002, 9.867643e-003, -2.560429e-003, -2.146761e-003, 8.237717e-003, 1.750412e-002, 1.310845e-002, 9.908049e-003, 7.626279e-003, -1.500109e-002, -1.600407e-002, 7.536128e-003, -8.448661e-004, 1.792991e-003, 7.896292e-003, -5.964187e-003, -3.129748e-002, -7.464012e-003, -5.214786e-003, -5.966686e-003, -1.660489e-002, -1.215632e-002, -2.387505e-003, -9.354888e-004, -5.557018e-003, -1.384447e-002, -7.410155e-003, 1.118166e-002, 1.588808e-002, 7.944009e-003, 6.671615e-003, 9.188764e-003, 5.866328e-003, -9.625478e-003, -3.097895e-002, -4.293561e-002, -3.583842e-002, -1.357487e-002, 1.189816e-002, 2.462706e-002, 1.621237e-002, -1.121438e-002, -1.363640e-002, -2.879547e-003, -7.499881e-003, -9.578803e-003, -2.996216e-003, -2.350551e-003, -8.959309e-003, -4.257968e-003, 9.029730e-003, 1.883268e-002, 1.388990e-002, 1.853028e-002, 6.921314e-003, -1.219476e-002, -1.676562e-003, 1.220948e-002, 2.820298e-003, 4.659097e-003, 1.263281e-002, -3.970323e-003, -3.268075e-002, -1.172428e-002, -1.072274e-002, -1.723746e-002, -1.687843e-002, -2.314961e-003, -2.743531e-004, -1.292366e-002, -9.208834e-003, -1.520066e-002, -1.373645e-002, 1.116351e-002, 2.241068e-002, 1.453439e-002, 9.887043e-003, 1.156664e-002, -2.183741e-003, -2.490192e-002, -5.323836e-002, -6.294251e-002, -5.759297e-002, -3.895837e-002, -1.380767e-002, -2.092185e-003, -1.263312e-003, -1.682845e-002, -2.860902e-002, -3.063379e-002, -3.782169e-002, -4.483634e-002, -3.683729e-002, -2.955182e-002, -2.051217e-002, -6.360666e-003, 1.102470e-002, 1.780149e-002, 1.316058e-002, 1.815037e-002, 2.360784e-003, -1.745246e-002, -2.656457e-003, 5.411477e-003, -3.426605e-003, 6.907357e-003, 1.505664e-002, -1.111751e-002, -3.927327e-002, -1.366049e-002, -2.896614e-002, -2.016578e-002, -1.449842e-002, 8.309561e-003, 1.609020e-002, -5.285531e-003, -1.887447e-002, -1.860388e-002, -1.761404e-002, 3.291670e-003, 2.170478e-002, 1.931594e-002, 1.297928e-002, 9.263364e-003, -4.805060e-003, -3.608744e-002, -5.905888e-002, -6.423987e-002, -5.506500e-002, -3.243975e-002, -1.467171e-002, -1.164198e-002, -4.262659e-003, -1.027097e-002, -2.554623e-002, -3.606605e-002, -5.182808e-002, -6.391180e-002, -6.262673e-002, -5.286795e-002, -3.347763e-002, -9.865783e-003, 9.891723e-003, 1.359835e-002, 1.337786e-002, 1.927179e-002, 1.517034e-003, -1.415296e-002, -6.964448e-003, -3.165166e-003, -6.964040e-003, 6.945857e-003, 8.487639e-003, -2.016988e-002, -3.602912e-002, -2.484701e-002, -2.066552e-002, -8.967486e-003, -6.829821e-003, 1.335513e-002, 2.022086e-002, -1.280292e-003, -2.726191e-002, -2.030637e-002, -1.700770e-002, -4.942520e-003, 1.727321e-002, 2.175220e-002, 1.321825e-002, 9.723615e-003, 4.143745e-003, -1.814333e-002, -4.091278e-002, -4.094573e-002, -2.965192e-002, -2.077794e-002, -2.084335e-002, -2.240560e-002, -1.770712e-002, -1.792450e-002, -2.697586e-002, -3.431907e-002, -4.627201e-002, -5.404934e-002, -5.478413e-002, -5.055818e-002, -3.354166e-002, -1.091794e-002, 5.129355e-003, 8.171841e-003, 1.012022e-002, 1.421287e-002, 4.257709e-003, -6.228317e-003, -1.129329e-002, -1.930691e-002, -1.894662e-002, -7.153621e-004, -1.370254e-003, -1.333795e-002, -2.472660e-002, -2.637579e-002, -9.875724e-003, 7.355112e-003, 3.461897e-003, 1.014548e-002, 1.299323e-002, -7.183977e-003, -2.857171e-002, -1.889572e-002, -1.660720e-002, -1.156499e-002, 8.913190e-003, 1.741682e-002, 1.521407e-002, 1.819977e-002, 1.940904e-002, 8.318695e-003, -2.166622e-002, -4.223772e-002, -4.218654e-002, -2.939333e-002, -2.014349e-002, -1.120814e-002, -1.231827e-002, -8.437213e-003, -1.532086e-002, -2.872772e-002, -4.311425e-002, -4.789728e-002, -4.220963e-002, -3.544721e-002, -2.001160e-002, -5.548738e-003, 3.500412e-004, 2.020837e-003, 8.283277e-003, 1.123791e-002, 9.532534e-003, 7.527544e-003, -1.278614e-002, -2.273161e-002, -1.924279e-002, -1.043232e-002, -8.283319e-003, -1.254827e-003, -1.342536e-002, -1.447664e-002, 5.885940e-003, 1.748515e-002, 8.072028e-003, 5.813875e-003, 6.454784e-003, -1.122038e-002, -2.372957e-002, -1.563910e-002, -7.576803e-003, -1.154978e-002, 1.341167e-003, 1.125348e-002, 1.198352e-002, 1.573269e-002, 1.692013e-002, 1.725363e-003, -3.096999e-002, -5.634866e-002, -5.748254e-002, -4.639103e-002, -2.827113e-002, -1.314750e-002, -1.641584e-002, -1.056991e-002, -1.953508e-002, -3.369516e-002, -4.566329e-002, -4.796662e-002, -2.518479e-002, -9.094909e-003, 1.305764e-003, 4.873893e-003, -1.801128e-003, -3.966317e-003, 3.732305e-003, 4.939937e-003, 7.662158e-003, 1.465231e-002, 1.441995e-003, -1.609336e-002, -1.832111e-002, -1.225096e-002, -9.719020e-003, 2.828097e-003, 1.591941e-003, -4.291124e-003, 1.468652e-002, 1.738569e-002, 8.361311e-003, 2.276813e-003, -3.484402e-004, -1.023181e-002, -1.580416e-002, -5.986306e-003, 5.142505e-003, -2.653960e-003, -2.550703e-003, 5.219892e-003, 3.137406e-003, 2.489298e-003, 5.218215e-003, -1.422044e-003, -1.166821e-002, -

© ISO/IEC 2004 — All rights reserved


Copyright International Organization for Standardization
Provided by IHS under license with ISO
No reproduction or networking permitted without license from IHS
Not for Resale

1.816703e-002, -2.533497e-002, -2.580317e-002, -2.479062e-002, -2.716798e-002, -3.058998e-002, -2.893479e-002, -3.089594e-002, -3.419461e-002, -3.090073e-002, -2.124446e-002, -8.013731e-004, 1.336717e-002, 1.565427e-002, 1.179479e-002, -2.004564e-003, -8.533635e-003, -3.909599e-003, -8.352650e-003, 7.091739e-003, 1.103401e-002, 1.083018e-002, -3.216109e-004, -1.328697e-002, -1.417797e-002, -4.609068e-003, 1.253490e-002, 1.065652e-002, -3.563312e-003, 6.583991e-003, 7.847704e-003, 2.090288e-003, -2.730543e-003, -1.055060e-003, -6.812257e-003, -5.207650e-003, 5.133204e-003, 2.077302e-002, 2.920434e-003, -4.951208e-003, 2.830802e-003, 3.517185e-003, -2.525183e-003, -9.032232e-005, 8.225512e-003, 1.182505e-002, 1.016765e-002, 1.698870e-003, -1.167051e-002, -2.918963e-002, -4.036346e-002, -3.970619e-002, -3.966165e-002, -3.243691e-002, -1.799996e-002, -1.040555e-002, -3.844946e-003, 5.679646e-003, 1.448373e-002, 1.548911e-002, 1.312094e-002, -3.256259e-003, -1.218265e-002, -1.244780e-002, -1.902046e-002, 4.735254e-004, 6.195632e-003, 2.130589e-002, 2.362889e-002, 4.814290e-003, -1.148754e-002, -3.813223e-003, 1.605279e-002, 1.379115e-002, -4.625737e-003, 2.166362e-005, -4.426406e-003, -8.416460e-003, -7.442822e-003, 1.786183e-003, -6.923150e-005, 2.779463e-003, 1.872130e-002, 2.534174e-002, 4.014283e-003, -4.114052e-003, 8.082718e-004, 1.694590e-003, -4.882980e-003, -3.234711e-003, 2.136439e-003, 7.774159e-003, 9.419581e-003, 4.563207e-003, -6.850868e-003, -2.084000e-002, -2.967904e-002, -3.305205e-002, -3.317431e-002, -2.353955e-002, -1.000483e-002, -4.250663e-003, -3.429768e-003, -1.104328e-004, 5.962239e-003, 1.215840e-002, 7.208877e-003, -1.007863e-002, -1.364301e-002, -1.661305e-002, -1.891552e-002, -1.313611e-002, -2.252970e-003, 1.615027e-002, 3.125023e-002, 1.401954e-002, -7.723066e-003, -1.267009e-002, 7.003706e-003, 2.789425e-003, -2.259213e-003, -4.117462e-003, -1.062586e-002, -7.455918e-003, -3.143836e-003, 1.596228e-003, -8.321084e-003, -2.598709e-003, 2.017496e-002, 1.593174e-002, -6.869672e-003, 9.149868e-004, 3.877104e-003, 2.593630e-003, -6.883773e-003, -8.755512e-003, -1.341175e-002, -9.423514e-003, -5.828847e-003, -9.929727e-003, -1.862815e-002, -2.743331e-002, -3.175504e-002, -3.380067e-002, -3.062315e-002, -1.926638e-002, -9.811579e-003, -4.725314e-003, -6.752845e-003, -5.975701e-003, -1.437186e-003, 3.431392e-003, 1.132826e-004, -1.333992e-002, -9.992526e-003, -2.143903e-002, -1.069656e-002, -1.572028e-002, -1.076028e-002, 6.460876e-003, 2.171381e-002, 9.870509e-003, -5.050382e-003, -1.835971e-002, -3.376375e-003, -5.091985e-003, -1.770209e-003, -5.171149e-003, -2.269891e-002, 5.878154e-003, 1.047303e-002, 1.048570e-003, -1.505609e-002, -8.419980e-003, 1.224534e-002, 7.640557e-003, -1.873226e-002, -2.720389e-003, 2.330961e-003, 2.243441e-003, -5.457714e-003, -1.443802e-002, -2.440092e-002, -2.400409e-002, -1.491416e-002, -1.529418e-002, -2.167582e-002, -3.018530e-002, -3.026519e-002, -2.582979e-002, -2.037067e-002, -1.593104e-002, -7.607835e-003, -4.812627e-003, -8.232469e-003, -9.783757e-003, -9.621892e-003, -5.292725e-003, -8.246044e-003, -1.654010e-002, -4.293036e-003, -3.008407e-003, -1.912490e-003, -1.738238e-002, -1.079431e-002, -3.154770e-003, 3.245562e-003, 3.009318e-003, -4.460871e-003, -1.887084e-002, -8.759760e-003, -8.794099e-003, 2.167277e-003, -1.250395e-003, -1.326233e-002, 1.294956e-002, 1.077884e-002, -3.791921e-003, -1.079808e-002, -3.490322e-003, 1.457155e-002, 2.652807e-003, -2.329941e-002, -1.019492e-002, 1.433487e-003, 1.759003e-003, -2.442305e-003, -1.016424e-002, -2.085801e-002, -2.335645e-002, -1.602616e-002, -1.087305e-002, -1.168384e-002, -1.538476e-002, -9.183098e-003, -2.179788e-003, -5.138361e-003, -5.699943e-003, -4.202176e-003, -5.591176e-003, -1.259742e-002, -1.638756e-002, -1.396750e-002, -6.311490e-003, -1.206768e-002, -1.362228e-002, -8.430040e-004, 1.464226e-002, 1.469566e-003, -7.811766e-003, -8.962195e-003, -3.524927e-003, -3.239399e-003, -1.132527e-003, -6.837763e-003, -2.734986e-002, -1.217026e-002, -9.652621e-003, 9.844920e-003, 4.053999e-003, -1.191388e-002, 9.792143e-003, 4.210474e-003, -5.067671e-003, -1.436064e-002, 4.084985e-003, 1.205952e-002, -7.704010e-003, -2.287140e-002, -6.183936e-003, -4.847640e-003, -4.762406e-003, -6.907295e-003, -8.028007e-003, -1.363184e-002, -1.641399e-002, -1.388095e-002, -7.748832e-003, -8.938365e-004, 2.354788e-004, 3.424539e-003, 8.204975e-003, 4.731285e-003, 1.012143e-003, -4.133699e-003, -8.094627e-003, -1.461217e-002, -1.917023e-002, -1.435720e-002, -6.610876e-003, -1.136498e-002, -1.146035e-002, -2.662999e-004, 1.333238e-002, 1.174168e-002, 6.996087e-003, 1.708611e-003, 2.947990e-003, -3.819789e-004, 2.007919e-003, -7.956659e-003, -3.201395e-002, -1.319085e-002, -9.458364e-003, 3.069039e-003, 1.480234e-003, -1.926155e-002, -3.185152e-004, -3.404669e-003, -6.756385e-003, -5.682951e-003, 1.224966e-002, 5.126246e-003, -9.897365e-003, -9.728372e-003, 4.769979e-003, -6.646473e-003, -1.301271e-002, -1.738740e-002, -1.599108e-002, -1.307749e-002, -1.352236e-002, -1.369775e-002, -9.959236e-003, -3.890439e-003, -5.345209e-004, 4.224771e-003, 7.480033e-003, 4.024663e-003, -2.944453e-003, -8.962681e-003, -1.295038e-002, -1.725438e-002, -2.044350e-002, -1.540858e-002, -5.377782e-003, -8.115304e-003, -2.048827e-002, -1.162936e-002, -2.141190e-003, 3.865783e-003, 8.446019e-003, 2.516882e-003, 1.431255e-002, 7.492135e-003, 1.442710e-002, -3.173275e-003, -2.422278e-002, -1.432993e-003, 2.378978e-003, -8.628219e-003, -9.956435e-003, -2.763900e-002, -9.505119e-003, -1.754739e-003, 7.157203e-003, 1.244990e-002, 1.211187e-002, 2.739691e-003, 5.992965e-003, 1.215319e-002, 1.902335e-002, -1.768989e-003, -1.157188e-002, -1.102380e-002, -8.384338e-003, -1.630635e-003, 1.691725e-003, -8.639099e-004, -1.395655e-003, 4.584127e-003, 1.004116e-002, 1.457073e-002, 1.251878e-002, 7.407800e-003, 2.753674e-003, -2.074919e-003, -7.416459e-003, -1.458828e-002, -1.768717e-002, -9.838286e-003, -1.524834e-003, -1.191604e-002, -2.129695e-002, -


© ISO/IEC 2004 — All rights reserved

--`,,```,,,,````-`-`,,`,,`,`,,`---

Copyright International Organization for Standardization
Provided by IHS under license with ISO
No reproduction or networking permitted without license from IHS
Not for Resale

1.687092e-002, -1.772051e-002, -1.146256e-002, -5.190362e-003, -1.181856e-002, 6.310644e-003, 7.505405e-003, 1.381907e-002, 2.022868e-003, -3.584087e-003, 1.451196e-002, 1.610563e-002, -1.572508e-002, -4.107384e-003, -2.028938e-002, -1.227194e-002, -9.157009e-003, 1.105762e-003, 4.818280e-003, -2.379554e-003, -2.885061e-003, -3.662401e-003, 1.161772e-002, 8.709918e-003, -6.061565e-003, -1.828413e-002, -1.524376e-002, -1.076456e-002, -2.838390e-003, -1.357892e-003, -4.537445e-003, -4.743040e-003, -5.656867e-003, 4.402200e-004, 2.590087e-003, 1.550171e-004, -6.574831e-003, -5.170490e-003, -6.460007e-003, -9.105924e-003, 1.850607e-003, 3.811262e-003, 9.762213e-003, 7.779568e-003, 6.476783e-003, 6.539008e-003, 2.911062e-003, -5.404186e-003, -4.523917e-003, -1.041487e-002, -1.320579e-002, 4.623299e-003, 1.089431e-002, -4.241730e-003, -1.655271e-002, -7.452341e-003, 2.189270e-002, 2.908582e-002, -4.278546e-003, 1.082888e-002, 1.616456e-002, -2.192070e-002, -2.409671e-002, -1.280078e-002, -1.636515e-003, -1.013831e-002, -6.512079e-003, -7.311190e-003, 3.393739e-003, -4.396997e-003, -7.044286e-003, -8.495935e-003, -7.018530e-003, -5.178235e-003, -1.540716e-003, 4.756399e-003, 2.458953e-003, 4.340103e-003, 9.489301e-003, 1.510929e-002, 1.702681e-002, 1.640877e-002, 1.625591e-002, 1.854591e-002, 1.685322e-002, 1.220186e-002, 3.224359e-003, -3.875898e-004, -1.158676e-004, -3.699589e-003, 5.673709e-003, 1.683330e-002, 1.167229e-002, 1.535653e-002, 1.599793e-002, -3.095273e-003, -1.040318e-002, 4.206835e-003, 1.479469e-002, -3.252645e-003, -2.113742e-002, -1.425566e-002, 3.672860e-003, 1.360780e-002, 5.932150e-003, 1.676387e-002, 2.012856e-002, -1.705020e-002, -1.703985e-002, 3.644076e-003, 7.553565e-003, -2.510589e-003, -4.041462e-003, -3.967092e-003, -1.161019e-002, -1.150909e-002, -3.543029e-003, 2.317060e-003, -3.480373e-003, -8.538034e-003, -3.709037e-003, -1.658744e-004, 1.310334e-003, 3.071227e-003, 8.117508e-003, 1.549869e-002, 1.796476e-002, 2.099326e-002, 2.156761e-002, 2.343227e-002, 1.895369e-002, 8.227170e-003, -2.783463e-003, -1.001053e-002, -1.282340e-002, -1.589811e-002, -4.114630e-004, 4.854710e-003, 2.055296e-003, 2.034293e-002, 2.729233e-002, 1.083929e-002, -6.578654e-003, 3.182529e-003, 8.855254e-003, 6.679303e-003, -4.826889e-003, -8.479014e-003, -8.834744e-003, -1.736449e-002, -1.725142e-002, 6.069547e-004, 1.084550e-002, -8.693141e-003, -2.232913e-003, 3.801363e-003, -5.411474e-003, -8.168143e-003, -1.162691e-002, -1.469680e-002, -2.660556e-002, -2.141512e-002, -2.060027e-003, -1.991470e-003, -1.116224e-002, -1.776306e-002, -1.498203e-002, -1.220969e-002, -1.077392e-002, -8.421695e-003, -3.101791e-003, 2.035120e-003, 7.763082e-003, 8.120431e-003, 6.534447e-003, 2.837600e-003, -2.108082e-003, -1.072274e-002, -2.212512e-002, -2.700097e-002, -3.141982e-002, -3.416561e-002, -2.087903e-002, -1.800891e-002, -2.388656e-002, -4.228999e-003, 1.159563e-002, 8.785934e-003, -8.829015e-003, -3.211469e-003, -2.694792e-003, -3.876881e-004, 1.169066e-003, 1.269455e-002, 7.209217e-003, -1.860014e-002, -3.468055e-002, -1.198006e-002, 5.006501e-003, 1.906484e-002, 1.775261e-002, 1.287033e-002, 1.070866e-002, 1.912212e-002, 2.251369e-002, 2.020674e-002, 4.255481e-003, 3.456514e-003, 2.521055e-002, 2.253245e-002, 1.614753e-002, 4.548354e-003, -6.309281e-004, -1.385420e-003, 3.817979e-004, 1.807669e-003, 6.870788e-003, 1.101028e-002, 1.334503e-002, 1.540991e-002, 1.588591e-002, 9.504534e-003, -3.362855e-003, -1.703514e-002, -2.340008e-002, -2.999519e-002, -3.787249e-002, -3.196791e-002, -2.583697e-002, -3.722388e-002, -4.762792e-002, -3.745026e-002, -2.102521e-002, -1.130627e-002, -1.443738e-002, -8.593998e-003, -3.772466e-003, -5.543504e-003, -8.861669e-003, 1.725255e-002, 2.851334e-002, 1.144689e-002, -3.470961e-002, -1.782407e-002, -9.933414e-003, -1.115208e-002, -2.149031e-002, -3.126859e-002, -3.472864e-002, -2.765640e-002, -2.109445e-002, -1.779570e-002, -2.211283e-002, -2.173200e-002, -5.557881e-004, 5.057650e-003, 1.046355e-003, -2.559281e-003, -1.311791e-003, 2.239736e-003, 1.260945e-002, 2.268166e-002, 2.946013e-002, 3.304701e-002, 3.547536e-002, 3.627443e-002, 3.392955e-002, 2.584118e-002, 1.852855e-002, 1.233032e-002, 1.047954e-002, 1.201248e-002, 1.907726e-002, 2.666781e-002, 1.863480e-002, 8.058424e-003, 6.266674e-004, -3.502542e-003, -1.157118e-002, -1.188796e-002, -9.751663e-003, -1.542389e-002, -1.927482e-002, -2.254341e-002, -2.771578e-002, -2.798075e-002, -1.362031e-002, -1.753635e-002},
{2.649192e-003, -5.759940e-003, -8.322935e-004, 7.450872e-003, 9.710473e-003, 2.621248e-004, -1.158920e-002, -1.364723e-002, -4.757377e-004, 9.896018e-003, 1.255260e-003, -9.621284e-003, -1.625392e-002, -2.236899e-002, -2.473508e-002, -2.116500e-002, -1.096766e-002, -5.647136e-003, 9.719829e-004, 5.227765e-003, 6.885075e-003, 3.179910e-003, -8.696668e-004, -5.714852e-004, -1.069728e-003, -1.204659e-003, -2.446441e-003, 1.033957e-003, 5.917685e-003, 4.239450e-003, -1.579754e-003, -6.996497e-004, 9.419701e-003, 1.987933e-002, 2.721742e-002, 2.967500e-002, 2.664965e-002, 2.085943e-002, 1.571235e-002, 1.793666e-002, 2.005263e-002, 1.801060e-002, 1.900537e-002, 2.075661e-002, 1.953010e-002, 1.947879e-002, 9.633580e-003, 4.072681e-003, 6.823519e-003, 1.200389e-002, 6.576298e-003, -1.045838e-002, -9.798570e-003, -1.261372e-003, 1.209912e-002, 1.407373e-002, 7.278635e-003, -5.636084e-003, -1.807462e-002, -2.136561e-002, -1.789466e-002, -6.596139e-003, -3.767091e-003, -5.469526e-003, -1.221755e-002, -1.653198e-002, -1.932345e-002, -2.041875e-002, -2.076801e-002, -2.059404e-002, -1.800958e-002, -1.568755e-002, -1.990043e-002, -2.489528e-002, -1.967818e-002, -1.485782e-002, -1.758927e-002, -2.335400e-002, -2.455779e-002, -2.019981e-002, -8.485840e-003, 1.493402e-003, 1.687287e-004, -1.797121e-003, -1.403672e-002, -1.527349e-002, -1.351861e-002, -1.185807e-002, -9.353987e-003, -4.375205e-003, 8.673073e-003, 1.008484e-002, 8.374353e-003, 4.127538e-003, 8.317270e-003, 9.914932e-003, -

© ISO/IEC 2004 — All rights reserved


Copyright International Organization for Standardization
Provided by IHS under license with ISO
No reproduction or networking permitted without license from IHS
Not for Resale

1.949601e-003, -4.588926e-003, -2.103862e-003, 1.037357e-002, 1.586208e-002, 2.188507e-002, 1.467688e-002, 3.622810e-003, 2.339486e-003, 1.347151e-002, 2.180229e-002, 1.543583e-002, 5.762326e-003, -6.149047e-004, -5.804460e-003, -9.955649e-003, -1.133456e-002, -1.065327e-002, -5.301280e-003, -1.589675e-003, 4.684790e-003, 4.540206e-003, 8.922559e-004, -6.321414e-003, -1.319275e-002, -1.485889e-002, -7.576811e-003, 2.320514e-003, 6.833394e-003, 2.155968e-004, -3.480300e-003, 4.491533e-003, 1.489049e-002, 1.047043e-002, -8.802190e-004, -1.473344e-003, 4.242090e-004, -3.460115e-003, -8.266029e-003, -1.369218e-002, 2.166088e-003, 5.298671e-003, 9.085158e-003, 7.609179e-003, 8.587207e-003, 4.240034e-003, 4.460420e-003, 5.243655e-003, 7.002542e-003, 7.923057e-003, 1.594591e-002, 1.936677e-002, 1.220398e-002, 1.003903e-002, 2.126695e-002, 3.033299e-002, 2.302812e-002, 1.142833e-002, 2.978206e-003, -4.284342e-004, -2.720259e-003, -4.646315e-003, -9.182299e-003, -9.591014e-003, -2.388412e-003, 7.499392e-003, 1.671209e-002, 2.119335e-002, 1.829483e-002, 1.020636e-002, 1.413633e-003, -5.455839e-003, -7.569897e-003, 4.530634e-003, 1.819962e-002, 2.389356e-002, 1.795075e-002, 1.277975e-002, 1.978284e-002, 2.487426e-002, 5.651082e-003, -4.083268e-003, 6.067522e-003, 8.555754e-003, 3.756889e-003, -4.704234e-003, 6.182241e-003, 6.854564e-003, -1.255996e-002, -1.439713e-002, -1.959148e-002, -1.738063e-002, -1.700275e-003, 2.945179e-003, -8.146472e-003, -7.438879e-003, 5.073789e-003, 4.534352e-003, -3.777700e-003, 7.123901e-003, 2.233965e-002, 1.811967e-002, 7.412213e-003, 3.442979e-003, 4.576524e-003, -1.537039e-003, -1.213493e-002, -1.865085e-002, -2.282702e-002, -2.431091e-002, -1.939750e-002, -6.255268e-003, 5.686970e-003, 1.353072e-002, 1.456552e-002, 8.762438e-003, -4.924181e-004, -7.085696e-003, -1.184353e-002, -8.063435e-003, 6.991438e-003, 2.856635e-002, 3.791342e-002, 2.610719e-002, 1.475138e-002, 2.242750e-002, 1.254202e-002, -9.641993e-003, 4.582883e-004, 1.374797e-002, 1.735792e-002, 2.125841e-003, 9.083283e-003, 4.940895e-003, -9.902364e-003, -9.388943e-003, -1.920762e-002, -1.966431e-003, -6.190379e-003, -1.350811e-002, -2.190007e-002, -8.536869e-003, 1.933938e-003, -6.060053e-003, -2.544383e-003, 1.365330e-002, 1.561279e-002, 5.113516e-003, -9.572939e-004, 2.339664e-004, -3.608320e-003, -9.267755e-003, -1.908349e-002, -2.487327e-002, -3.242304e-002, -3.572265e-002, -3.382276e-002, -2.363775e-002, -1.396334e-002, -3.861975e-003, -4.952066e-003, -1.030470e-002, -1.372493e-002, -1.635082e-002, -1.980183e-002, -1.986722e-002, -1.358045e-002, 1.042347e-003, 1.680051e-002, 1.983700e-002, -4.584257e-004, -5.257590e-003, -4.646683e-003, -2.524297e-002, -3.439356e-002, -1.326838e-002, -4.565665e-003, -1.749280e-002, -1.897107e-002, -2.274682e-002, -8.046255e-003, -3.126355e-003, -1.142799e-002, 1.464270e-002, -2.050023e-003, -1.243293e-002, -4.864229e-003, 1.210525e-002, 8.492004e-003, 1.694211e-003, 1.244835e-002, 1.782465e-002, 1.300536e-002, 1.224189e-002, 1.039717e-002, 5.758298e-003, 3.499203e-003, -3.308178e-004, -4.020805e-003, -6.779034e-003, -1.685435e-002, -2.235609e-002, -2.334117e-002, -2.036116e-002, -1.663901e-002, -1.271843e-002, -2.139774e-002, -2.719737e-002, -2.405656e-002, -1.897959e-002, -1.621043e-002, -9.193367e-003, -2.503335e-003, -1.648519e-003, 6.170826e-003, 1.910383e-002, 1.112045e-002, -6.045394e-003, -3.681289e-003, -1.083460e-002, -2.632304e-002, -1.014673e-002, -1.917800e-003, -9.474130e-003, -1.396074e-002, -1.814160e-002, -2.923772e-003, 9.455620e-003, 1.577266e-003, 2.265423e-002, -5.446946e-003, -7.556392e-003, 1.465310e-002, 1.720641e-002, 6.161084e-003, 1.429936e-003, 1.003784e-002, 1.203874e-002, 1.129742e-002, 1.281111e-002, 1.032110e-002, 5.569644e-003, 1.119615e-002, 1.468044e-002, 1.435653e-002, 1.049610e-002, 1.581765e-004, -8.400445e-003, -1.445300e-002, -1.508657e-002, -1.449288e-002, -1.507521e-002, -2.580155e-002, -3.094450e-002, -2.609457e-002, -1.593665e-002, -7.195732e-003, 1.535085e-003, 9.986284e-003, 1.300127e-002, 1.138871e-002, 1.389641e-002, 1.457802e-002, -3.881404e-004, -7.207722e-003, -5.975553e-003, -1.146726e-002, -3.540758e-003, 7.617170e-003, -2.340710e-003, -2.103822e-003, -1.280138e-002, 3.355189e-003, 1.604902e-002, 9.983609e-003, 2.357305e-002, -4.984138e-003, 2.756439e-003, 1.797978e-002, 1.016551e-002, -3.306834e-003, -3.605261e-003, 7.774174e-003, 5.653910e-003, 6.285747e-003, 6.988209e-003, 4.573966e-003, 6.628184e-003, 2.046993e-002, 2.523645e-002, 2.279211e-002, 1.448829e-002, 5.272774e-003, -7.491091e-003, -1.150621e-002, -1.448769e-002, -1.661843e-002, -1.858608e-002, -2.511421e-002, -2.998197e-002, -2.228347e-002, -9.100100e-003, 4.528910e-003, 1.744070e-002, 2.560905e-002, 2.639825e-002, 2.508443e-002, 1.568294e-002, 1.108271e-002, -6.113498e-003, -1.462012e-002, -5.219650e-003, 5.270110e-003, 6.391102e-003, 1.253948e-002, 7.256016e-003, 9.222542e-003, -3.766280e-003, 8.788038e-003, 1.972853e-002, 1.140225e-002, 2.215342e-002, 6.726691e-004, 1.327348e-002, 1.577777e-002, -5.496721e-003, -1.712660e-002, -3.538609e-003, 5.798205e-003, 7.495114e-003, 1.190811e-002, 1.138164e-002, 6.115588e-003, 8.573078e-003, 1.366417e-002, 1.631255e-002, 1.375011e-002, 7.331734e-003, -1.628957e-003, -1.458149e-002, -2.164374e-002, -2.287960e-002, -2.378652e-002, -2.390315e-002, -2.620684e-002, -3.257754e-002, -2.622539e-002, -1.395454e-002, 5.256103e-003, 2.045706e-002, 2.902762e-002, 3.154658e-002, 2.956120e-002, 2.139303e-002, 1.077842e-002, -7.431748e-003, -1.937727e-002, -1.304950e-002, 7.933700e-003, 1.024919e-002, 1.569693e-002, 1.715105e-002, 6.814562e-003, 1.258339e-003, 9.350072e-003, -4.961295e-003, 1.140410e-002, 2.003511e-002, 5.361483e-003, 1.294651e-002, 4.481970e-003, -1.921906e-002, -1.874528e-002, -2.376245e-003, 7.060635e-003, 1.821362e-002, 2.063294e-002, 1.412689e-002, 2.633636e-003, -4.058434e-003, -3.574332e-003, -3.428138e-003, -3.358733e-003, -9.814199e-003, -


© ISO/IEC 2004 — All rights reserved
--`,,```,,,,````-`-`,,`,,`,`,,`---

Copyright International Organization for Standardization
Provided by IHS under license with ISO
No reproduction or networking permitted without license from IHS
Not for Resale

1.734316e-002, -2.751697e-002, -3.237141e-002, -3.256551e-002, -2.963480e-002, -2.669313e-002, -2.943035e-002, -3.575379e-002, -3.299924e-002, -2.449414e-002, -1.248922e-002, 1.904362e-003, 1.771782e-002, 2.471635e-002, 2.509865e-002, 2.133306e-002, 1.277994e-002, -3.864902e-003, -2.015999e-002, -1.626387e-002, 1.879243e-003, 1.192779e-002, 1.448972e-002, 1.585900e-002, 1.340787e-002, 3.878499e-003, 6.415487e-003, -1.054756e-002, 2.402412e-003, 1.808923e-002, 8.880675e-003, 3.169302e-003, -9.447872e-003, -2.494149e-002, -1.061591e-002, 2.675512e-003, 1.455606e-002, 2.712690e-002, 2.648786e-002, 1.187423e-002, -6.647354e-003, -2.079769e-002, -2.249623e-002, -1.613118e-002, -1.519938e-002, -2.111887e-002, -2.779038e-002, -3.464254e-002, -3.840968e-002, -3.516639e-002, -2.990697e-002, -2.621601e-002, -2.732000e-002, -3.449358e-002, -3.684207e-002, -3.571207e-002, -3.158949e-002, -2.397177e-002, -4.181222e-003, 9.415455e-003, 1.635101e-002, 1.296333e-002, 6.740049e-003, -4.402538e-003, -1.400834e-002, -5.385442e-003, 5.283567e-003, 1.074739e-002, 1.203922e-002, 1.112812e-002, 7.972394e-003, 8.762773e-003, 4.169846e-003, -1.654979e-002, -5.827610e-004, -8.313362e-004, 7.631942e-003, -2.117655e-003, -1.368245e-002, -1.600374e-002, 3.327125e-003, 1.075603e-002, 2.528502e-002, 3.340982e-002, 1.960203e-002, -4.085155e-003, -2.106674e-002, -3.118152e-002, -2.791937e-002, -1.924964e-002, -1.330185e-002, -2.044493e-002, -2.779193e-002, -3.063394e-002, -3.465322e-002, -2.963401e-002, -2.410425e-002, -1.948034e-002, -1.653643e-002, -1.902564e-002, -2.444890e-002, -3.097706e-002, -3.335217e-002, -3.294715e-002, -2.272288e-002, -6.443135e-003, 2.443874e-003, 8.235134e-003, 3.361665e-003, -3.423018e-003, -1.542179e-002, -1.441762e-003, 9.791777e-003, 1.424573e-003, 2.795126e-003, 2.102553e-003, 4.474869e-003, 7.976865e-003, -4.359902e-003, -2.137698e-002, -6.383122e-003, -3.597100e-003, 9.038451e-003, 3.570571e-003, -6.820496e-003, -6.232816e-003, 8.069005e-003, 1.326032e-002, 3.196832e-002, 3.523601e-002, 7.868928e-003, -2.067307e-002, -3.210340e-002, -3.541577e-002, -2.916759e-002, -1.657764e-002, -8.236791e-003, -1.085224e-002, -1.687091e-002, -2.072544e-002, -2.280589e-002, -1.807532e-002, -1.148935e-002, -4.949674e-003, 2.874418e-004, 2.057116e-003, -2.754887e-003, -1.213786e-002, -1.893662e-002, -2.603856e-002, -2.851042e-002, -1.840293e-002, -8.332430e-003, 3.226763e-003, 3.433016e-003, -2.328009e-003, -1.980513e-002, -1.106288e-003, 1.714682e-002, -3.183527e-003, -8.076807e-003, -4.824654e-003, -1.477805e-003, 7.084556e-003, -7.885720e-003, -2.368779e-002, -7.564207e-003, -6.112976e-003, 1.089046e-002, 7.124232e-003, 7.479464e-004, 1.063413e-002, 1.299238e-002, 1.359160e-002, 3.196220e-002, 2.423977e-002, -7.591581e-003, -3.099727e-002, -3.567632e-002, -3.766143e-002, -2.901318e-002, -1.632403e-002, -8.787000e-003, -7.453825e-003, -1.187616e-002, -1.226843e-002, -1.359284e-002, -5.880764e-003, 1.966199e-003, 9.910486e-003, 1.700700e-002, 1.970080e-002, 1.708106e-002, 8.864192e-003, -1.703906e-003, -1.008957e-002, -1.620025e-002, -1.513677e-002, -4.097355e-003, -7.809884e-004, 7.337996e-003, 3.691937e-003, -1.373132e-002, 1.111218e-003, 2.484732e-002, -1.599419e-003, -1.660826e-002, -1.513255e-002, -2.457473e-003, 5.152887e-003, -1.189937e-002, -1.987691e-002, -2.910176e-004, -1.062105e-002, 1.456264e-002, 9.919074e-003, 5.676947e-003, 1.743638e-002, 1.646394e-002, 7.297592e-003, 1.601602e-002, 8.965628e-003, -1.640708e-002, -3.327739e-002, -3.752716e-002, -3.234068e-002, -2.088347e-002, -1.337581e-002, -1.011420e-002, -9.540703e-003, -1.373733e-002, -1.312836e-002, -1.350775e-002, -7.296322e-003, 7.127713e-004, 8.579084e-003, 1.601027e-002, 1.639662e-002, 1.795587e-002, 1.694795e-002, 1.496579e-002, 8.561208e-003, 4.334319e-003, 2.797816e-003, 8.681423e-003, 5.405252e-003, 1.217652e-002, 1.250109e-002, -4.553237e-003, 3.328392e-004, 2.573633e-002, 7.338554e-003, -1.558463e-002, -1.487992e-002, -4.056372e-003, -4.986026e-003, -9.437901e-003, -7.545720e-003, 1.051833e-002, -1.280576e-002, 1.615340e-002, 9.582009e-003, 8.336224e-003, 2.037132e-002, 1.417152e-002, -6.940309e-003, 4.080881e-005, 3.950089e-003, -9.070612e-003, -1.650695e-002, -9.529421e-003, 1.011651e-004, 2.789014e-003, -2.753784e-003, -1.194658e-002, -1.664320e-002, -2.127084e-002, -2.448201e-002, -2.586116e-002, -2.083473e-002, -1.581999e-002, -9.122205e-003, 9.639051e-004, 6.032499e-003, 1.678359e-002, 2.491225e-002, 3.226687e-002, 3.179617e-002, 2.976237e-002, 2.416060e-002, 1.925741e-002, 1.345076e-002, 1.176377e-002, 1.426269e-002, 9.188293e-004, -1.092251e-003, 2.324291e-002, 5.677242e-003, -1.213765e-002, -9.545957e-003, -5.347455e-003, -8.263957e-003, -2.910687e-004, 4.897537e-003, 1.870304e-002, -1.059005e-002, 1.492626e-002, 3.338746e-003, 1.152294e-003, 1.962648e-002, 9.981314e-003, -1.499524e-002, -1.233746e-003, 1.388298e-002, 1.557604e-002, 1.935833e-002, 3.241743e-002, 3.972075e-002, 3.612497e-002, 2.626346e-002, 5.509246e-003, -9.583066e-003, -2.430371e-002, -3.509107e-002, -3.889076e-002, -3.605526e-002, -3.374547e-002, -2.374695e-002, -6.425185e-003, 8.653613e-003, 2.448968e-002, 3.888964e-002, 4.789169e-002, 4.922059e-002, 4.499318e-002, 3.999308e-002, 3.159589e-002, 2.125136e-002, 1.082751e-002, 1.686035e-002, 6.002140e-003, -4.297977e-003, 9.083686e-003, -2.343749e-003, -8.171306e-003, -2.794910e-003, -4.173610e-003, -1.167512e-002, 9.707758e-003, 7.046576e-003, 2.204252e-002, -1.211722e-002, 1.129919e-002, -4.450136e-003, -4.868147e-003, 1.819664e-002, 7.647664e-003, -9.863598e-003, 1.380974e-002, 3.977568e-002, 3.489445e-002, 2.688018e-002, 2.418135e-002, 2.678571e-002, 2.986048e-002, 3.348037e-002, 3.001924e-002, 1.239414e-002, -1.257669e-002, -3.434191e-002, -4.287510e-002, -4.395468e-002, -3.837728e-002, -1.953465e-002, 6.329624e-003, 2.408080e-002, 2.466277e-002, 1.656496e-002, 1.238717e-002, 1.535313e-002, 2.745207e-002, 4.408467e-002, 4.825467e-002, 3.160900e-002,

© ISO/IEC 2004 — All rights reserved


Copyright International Organization for Standardization
Provided by IHS under license with ISO
No reproduction or networking permitted without license from IHS
Not for Resale

1.453457e-002, 1.741661e-002, 1.046343e-002, -4.725792e-003, -6.493530e-003, -9.464147e-003, -1.145789e-003, 6.245693e-003, -2.676169e-003, -1.751803e-002, 1.308898e-002, 7.407411e-003, 2.039535e-002, -1.496014e-002, -1.537494e-003, -1.272486e-002, -8.346830e-003, 7.452656e-003, 9.962473e-003, 3.722391e-003, 2.526251e-002, 5.175160e-002, 5.046223e-002, 4.634679e-002, 2.868471e-002, 8.919203e-003, 1.717806e-003, 1.438243e-002, 3.773854e-002, 4.275553e-002, 2.766859e-002, -8.736929e-004, -1.423004e-002, -1.580618e-002, -4.042819e-003, 2.481627e-002, 4.393972e-002, 3.370938e-002, 4.133281e-003, -1.390741e-002, -5.471321e-003, 2.120747e-002, 5.550854e-002, 8.006979e-002, 8.046945e-002, 5.657323e-002, 2.607603e-002, 1.370436e-002, 1.072786e-002, -1.133424e-003, -1.404777e-002, -1.019266e-002, 3.641352e-003, 1.279709e-002, -6.958580e-004, -2.219888e-002, 7.528247e-003, 3.587165e-004, -1.605518e-002, -1.438860e-002, -1.305917e-002, -1.702132e-002, -8.320890e-003, 5.436788e-004, 1.767157e-002, 5.530839e-003, 4.625879e-003, 3.044978e-002, 4.625198e-002, 5.690358e-002, 4.710641e-002, 2.017120e-002, -4.408850e-003, -1.514285e-002, -6.069345e-003, 2.194783e-002, 3.652658e-002, 2.407239e-002, 1.502614e-002, 1.369031e-002, 2.788272e-002, 5.718693e-002, 5.855179e-002, 2.674165e-002, -8.918393e-003, -1.825662e-002, 3.601973e-003, 3.570294e-002, 6.214203e-002, 6.999268e-002, 6.516508e-002, 4.946460e-002, 2.182853e-002, 6.947608e-003, 5.946221e-003, 5.082058e-003, -1.139963e-002, -1.377988e-002, 5.443900e-003, 1.394989e-002, 3.127929e-003, -2.319847e-002, -2.324906e-002, -2.443941e-003, -2.479178e-002, -4.904456e-003, -9.601822e-003, -1.545457e-002, -5.335899e-003, -4.272203e-003, 8.197091e-003, -1.284810e-002, -3.446440e-002, -4.911074e-003, 1.423704e-002, 1.529776e-002, 9.157848e-003, -3.122250e-003, -2.258878e-002, -4.181352e-002, -4.371759e-002, -2.539887e-002, 8.368600e-004, 1.522517e-002, 1.179011e-002, 1.217902e-002, 2.492746e-002, 4.624211e-002, 3.591731e-002, -4.973255e-003, -3.391674e-002, -3.645529e-002, -2.118731e-002, -3.355424e-003, 1.537034e-002, 2.520717e-002, 2.076462e-002, 8.228194e-003, -4.120834e-003, -1.624161e-003, 8.799218e-003, 1.140475e-002, 1.719371e-003, -1.186949e-002, 1.768397e-003, 1.105798e-002, 8.639262e-003, -2.101762e-002, -2.806617e-002, -1.559890e-003, -2.181222e-002, 1.213566e-002, 1.170335e-002, -5.148160e-003, 3.513558e-003, -2.393593e-003, 1.943125e-003, -1.909852e-002, -5.634486e-002, -3.900801e-002, -3.503750e-002, -5.285434e-002, -3.896683e-002, -1.159903e-002, -5.166959e-003, -3.111671e-002, -4.627045e-002, -4.632570e-002, -1.457990e-002, 9.433694e-003, 1.876960e-002, 1.906987e-002, 1.968469e-002, 2.766861e-002, 2.034246e-002, -1.308178e-002, -3.830491e-002, -3.004850e-002, 3.932241e-004, 6.580212e-003, -6.379097e-003, -1.052786e-002, -1.548282e-002, -2.302103e-002, -2.764861e-002, -1.967846e-002, 4.961709e-003, 1.381205e-002, 1.470918e-002, -1.040227e-003, -3.849823e-003, 8.478299e-003, 6.148562e-003, -2.889505e-002, -2.469371e-002, 2.611020e-003, -1.331074e-002, 3.153916e-002, 2.578593e-002, 4.742613e-003, 2.397378e-002, 1.285121e-002, 1.920801e-002, -5.228157e-003, -5.651845e-002, -4.835262e-002, -4.638449e-002, -7.089229e-002, -3.169258e-002, 3.886347e-002, 6.288536e-002, -6.957710e-003, -4.185907e-002, -3.008901e-002, 1.444398e-003, 2.668357e-002, 5.234040e-002, 5.350361e-002, 4.828662e-002, 4.007134e-002, 3.460807e-002, -1.671064e-003, -3.769288e-002, -1.415791e-002, 3.725261e-002, 2.819036e-002, -2.779739e-002, -3.512972e-002, -1.623620e-002, -1.524048e-002, -2.028217e-002, -2.176682e-002, 3.396492e-003, 1.583689e-002, 2.437720e-002, 1.194296e-002, -6.800788e-003, 6.935313e-003, 5.914205e-003, -3.102361e-002, -2.864886e-002, 1.405949e-002, -9.467255e-003, 3.595446e-002, 1.852058e-002, -1.986309e-003, 2.065913e-002, 1.020349e-002, 2.176794e-002, 1.234671e-002, -2.950355e-002, -3.584035e-002, -3.466394e-002, -4.328322e-002, -3.606714e-003, 8.317792e-002, 7.882191e-002, 2.983425e-003, -1.182052e-002, 7.639383e-003, 4.638111e-002, 6.334701e-002, 8.369756e-002, 8.732675e-002, 8.205871e-002, 6.423128e-002, 4.866440e-002, 1.705886e-002, -1.618908e-002, -2.947671e-003, 3.880377e-002, 2.326338e-002, -5.612071e-002, -7.288472e-002, -3.017947e-002, 7.419549e-003, 2.108341e-003, 1.353292e-004, 1.564949e-002, 1.800282e-002, 3.601293e-002, 1.710938e-002, -9.208116e-003, 8.578947e-003, 1.263721e-002, 4.734157e-003, -1.926100e-002, 2.899914e-002, -1.197583e-002, 2.427791e-002, 4.239241e-003, -1.368325e-002, 1.101708e-002, -1.180120e-003, 1.411402e-002, 9.537972e-003, -1.937976e-002, -2.452362e-002, -2.090810e-002, -1.596937e-002, -3.730365e-005, 1.653732e-002, 8.378579e-003, 2.209335e-003, 1.002448e-002, 3.176579e-002, 7.094375e-002, 7.967531e-002, 8.570605e-002, 9.151128e-002, 9.742395e-002, 7.707959e-002, 5.803578e-002, 2.573391e-002, 5.592481e-003, -3.275555e-003, -5.649073e-003, -9.661518e-003, -2.404280e-002, -4.739096e-002, -3.155253e-002, 1.995476e-003, 2.886725e-003, 1.052655e-002, 1.504588e-002, 4.623310e-003, 2.230716e-002, 9.869817e-003, -6.402761e-003, 1.282295e-002, 1.983471e-002, 2.145651e-002, -1.502585e-002, 4.174794e-002, -9.724277e-003, 1.537759e-002, 6.274728e-004, -9.317043e-003, 1.074181e-002, -8.458226e-003, 3.672712e-004, 5.616018e-003, -1.358703e-002, -1.692571e-002, -1.977988e-003, 1.195424e-002, 1.077928e-002, 9.798109e-003, 4.709694e-003, 9.089887e-003, 2.009074e-002, 4.894357e-002, 7.898821e-002, 8.265245e-002, 7.158840e-002, 7.709286e-002, 8.747527e-002, 8.116583e-002, 6.229138e-002, 3.602931e-002, 1.888346e-002, 7.667134e-003, 2.762007e-003, 1.637397e-003, -5.274952e-003, -2.116377e-002, -1.575180e-002, 2.379517e-004, -4.847467e-004, 3.884707e-003, -4.837965e-003, -2.241976e-002, 3.916102e-003, 2.449212e-003, 3.158333e-003, 1.190060e-002, 1.603316e-002, 2.740096e-002, -7.483726e-003, 4.856814e-002, -2.221799e-003, 9.680873e-003, -5.690274e-004, -3.987296e-003,


© ISO/IEC 2004 — All rights reserved

Copyright International Organization for Standardization
Provided by IHS under license with ISO
No reproduction or networking permitted without license from IHS
Not for Resale

6.916745e-003, -1.203593e-002, -4.725845e-003, 2.999136e-003, -1.351615e-002, -8.234993e-003, 1.335566e-002, 2.762628e-002, 2.425890e-002, 2.141647e-002, 1.912472e-002, 2.474517e-002, 3.619537e-002, 6.207789e-002, 7.665381e-002, 7.098376e-002, 5.187005e-002, 5.206375e-002, 6.168493e-002, 6.402561e-002, 5.015264e-002, 3.703891e-002, 2.541108e-002, 1.455249e-002, 1.242976e-002, 1.133959e-002, 7.366072e-003, -8.994589e-003, -8.455495e-003, -2.305221e-003, 2.950128e-004, 6.945437e-003, -5.589360e-003, -3.074066e-002, -8.268879e-003, -4.591244e-004, 7.485310e-003, 5.058971e-004, 1.985366e-003, 2.918437e-002, -4.302729e-003, 4.475668e-002, -2.119226e-003, 7.551955e-004, 1.146562e-003, -6.257516e-003, 1.296305e-003, -2.031566e-002, -1.188708e-002, -2.229572e-004, -1.708363e-002, -7.898658e-003, 1.448870e-002, 3.001268e-002, 3.125870e-002, 2.884678e-002, 3.130811e-002, 3.850760e-002, 5.038938e-002, 6.225372e-002, 6.489706e-002, 4.567519e-002, 2.696850e-002, 2.414077e-002, 2.589286e-002, 3.572366e-002, 3.007891e-002, 2.551734e-002, 2.403233e-002, 2.003234e-002, 1.740622e-002, 1.833477e-002, 1.046972e-002, -4.845602e-003, -1.009431e-002, -2.312325e-003, 2.001181e-003, 1.561625e-003, -8.003594e-003, -3.268711e-002, -1.118021e-002, 2.470538e-003, 1.200905e-002, -4.098565e-003, -1.403211e-002, 2.358017e-002, -9.895770e-003, -1.202861e-002, -6.483527e-003, -6.164048e-003, 6.019460e-003, -3.055147e-003, -3.385949e-003, -2.516283e-002, -1.509096e-002, -1.867007e-003, -1.388522e-002, -7.510102e-003, 1.557701e-002, 2.511824e-002, 2.844038e-002, 3.284230e-002, 3.840645e-002, 4.724739e-002, 4.933054e-002, 4.843537e-002, 3.493140e-002, 1.120203e-002, 1.709664e-003, -4.857853e-003, -1.292578e-002, -6.724670e-004, 7.894125e-003, 5.816485e-003, 1.470157e-002, 2.131751e-002, 1.873978e-002, 1.808657e-002, 1.166771e-002, -6.987830e-004, -9.257728e-003, -2.763613e-003, 3.422371e-003, -3.410993e-003, -1.151209e-002, -2.854456e-002, -1.183180e-002, 2.917118e-003, 1.348236e-002, -3.906508e-003, -2.684458e-002, 1.684191e-002, -2.152888e-004, -2.382086e-002, -1.025161e-002, -9.974092e-003, -1.965080e-003, -8.409501e-003, -8.749590e-003, -2.266231e-002, -1.615628e-002, 1.950277e-003, -5.572886e-003, -2.453238e-003, 1.546806e-002, 2.686946e-002, 3.012911e-002, 3.184357e-002, 3.401409e-002, 3.311578e-002, 3.170700e-002, 2.572281e-002, -6.554220e-003, -3.586529e-002, -3.538797e-002, -4.440600e-002, -5.231207e-002, -4.238538e-002, -1.476290e-002, -4.540222e-003, 2.348359e-003, 1.297343e-002, 1.225791e-002, 9.429098e-003, 4.972377e-003, -7.190854e-004, -7.711557e-003, -5.639599e-004, 2.149295e-003, -1.032332e-002, -1.359468e-002, -1.653252e-002, -1.032059e-002, -7.976681e-004, 1.389725e-002, -1.308426e-003, -3.097522e-002, -1.588269e-002, -1.847864e-003, -2.248081e-002, -4.943612e-003, -7.422959e-003, -5.138385e-003, -1.311003e-002, -1.777830e-002, -2.023155e-002, -1.824346e-002, 5.538772e-003, 6.594623e-003, 8.639498e-003, 1.808704e-002, 2.582688e-002, 2.629787e-002, 2.613969e-002, 2.738569e-002, 2.618732e-002, 2.290616e-002, -4.875922e-004, -4.711074e-002, -6.794166e-002, -5.538701e-002, -5.912642e-002, -6.113262e-002, -5.481036e-002, -2.560329e-002, -8.563897e-003, 6.337034e-003, 2.251189e-002, 2.077303e-002, 1.392026e-002, 9.396816e-003, 4.794804e-003, 1.155037e-003, 4.229067e-003, -1.113374e-003, -1.243703e-002, -1.075528e-002, -2.713481e-003, -9.111473e-003, -7.567339e-004, 9.716286e-003, -4.942548e-003, -3.135766e-002, -2.497131e-002, 3.923107e-003, -1.904341e-002, -1.966824e-003, -3.447534e-003, -9.124106e-003, -1.845991e-002, -1.834914e-002, -1.687836e-002, -1.618913e-002, 6.696652e-003, 1.554332e-002, 1.526851e-002, 2.068312e-002, 2.589159e-002, 2.271262e-002, 1.826477e-002, 1.513394e-002, 1.592641e-002, 2.941823e-002, -1.794084e-003, -4.990880e-002, -4.879018e-002, -3.044300e-002, -3.644861e-002, -4.517401e-002, -3.417552e-002, 8.513820e-003, 9.842970e-003, 1.164783e-002, 2.504652e-002, 2.764390e-002, 2.096593e-002, 1.270285e-002, 4.796553e-003, 2.929703e-003, 5.821386e-003, -1.690349e-003, -8.496191e-003, -4.767373e-003, 9.896896e-003, -6.093013e-003, -7.864580e-003, 1.080333e-003, -8.954673e-003, -5.461479e-004, -2.509823e-002, 9.263755e-003, -1.964110e-002, 2.271010e-003, 2.654826e-003, -1.011087e-002, -1.950446e-002, -1.282599e-002, -4.712485e-003, -8.413701e-003, 5.716963e-003, 2.327440e-002, 2.293358e-002, 2.487356e-002, 2.290038e-002, 1.704220e-002, 8.326740e-003, 1.259871e-003, 1.310030e-002, 3.262254e-002, -9.321376e-003, -6.069577e-002, -6.202721e-002, -5.042055e-002, -4.644322e-002, -4.925756e-002, -4.424966e-002, 1.249691e-003, 1.627780e-002, 6.325391e-003, 1.258521e-002, 2.062015e-002, 1.588987e-002, 9.414406e-003, 3.223207e-003, 7.003329e-003, 1.088370e-002, 1.841685e-003, -8.084817e-003, 5.047548e-003, 2.201321e-002, -2.499072e-003, -1.405985e-002, 1.409734e-003, -5.611203e-003, 6.131119e-003, -1.762067e-002, 1.601936e-002, -2.067939e-002, -1.119290e-003, 1.072366e-002, -6.082476e-003, -1.107745e-002, -2.681652e-003, 2.579378e-003, -3.419271e-003, 8.041281e-004, 2.395685e-002, 2.858286e-002, 2.966666e-002, 2.285281e-002, 1.187223e-002, -3.995384e-003, -9.247186e-003, 9.298165e-003, 2.682081e-002, -2.562820e-003, -4.528639e-002, -5.378576e-002, -5.446358e-002, -5.127555e-002, -4.242873e-002, -3.480972e-002, -4.576155e-003, 5.776928e-003, -2.556042e-003, -4.523422e-003, 8.337224e-003, 7.491452e-003, 3.224689e-003, 4.883454e-004, 8.990867e-003, 1.070898e-002, -2.189063e-003, -6.310122e-003, 1.510875e-002, 2.804437e-002, -5.732430e-003, -1.154514e-002, 5.272492e-003, -1.010650e-002, 5.250488e-003, -1.917073e-002, 2.429505e-002, -2.146695e-002, -2.040739e-004, 1.452914e-002, -5.133433e-003, -7.516814e-003, 9.392649e-003, 1.311890e-002, -2.584971e-003, -1.043114e-003, 1.699746e-002, 2.925283e-002, 3.329398e-002, 2.151222e-002, 3.042273e-003, -1.701442e-002, -2.356656e-002, -8.003967e-003, 2.777089e-003, -1.907026e-003, -2.282532e-002, -3.661063e-002, -

© ISO/IEC 2004 — All rights reserved


Copyright International Organization for Standardization
Provided by IHS under license with ISO
No reproduction or networking permitted without license from IHS
Not for Resale

5.032748e-002, -4.311160e-002, -2.599762e-002, -2.616522e-002, -2.051325e-002, -1.427944e-002, -1.545776e-002, -2.016767e-002, -7.548808e-003, 5.534763e-004, -1.478753e-003, -1.018840e-003, 1.225873e-002, 9.643416e-003, -6.037346e-003, -7.486502e-003, 1.860237e-002, 1.552728e-002, -6.656058e-003, 4.825638e-003, 1.218147e-002, -1.499759e-002, -8.516395e-004, -1.389636e-002, 3.575797e-002, -1.834445e-002, -3.270867e-003, 9.119911e-003, -5.917698e-003, -6.828148e-003, 1.484159e-002, 2.589081e-002, 7.707056e-003, -5.520010e-003, 7.942636e-003, 2.227470e-002, 2.963097e-002, 1.667912e-002, -9.456018e-003, -2.853707e-002, -3.237641e-002, -2.385799e-002, -2.005619e-002, -2.437337e-002, -2.854832e-002, -2.907833e-002, -4.214752e-002, -4.316247e-002, -3.347405e-002, -4.095051e-002, -4.417150e-002, -3.702790e-002, -3.099017e-002, -3.141839e-002, -2.756341e-002, -1.382665e-002, -7.737774e-003, -4.817648e-004, 1.421333e-002, 7.092795e-003, -8.610752e-003, -9.848958e-003, 1.371446e-002, 5.336071e-003, -1.416313e-003, 2.355065e-002, 1.131060e-002, -2.251938e-002, -1.382304e-003, -6.024762e-003, 4.400793e-002, 4.794345e-003, -1.205206e-002, 9.184323e-003, -6.384641e-004, -5.574046e-003, 1.621054e-002, 2.126254e-002, 7.707882e-003, -8.810758e-003, -5.181135e-003, 1.080490e-002, 1.677306e-002, 6.279074e-003, -1.910403e-002, -3.363542e-002, -3.071581e-002, -2.162323e-002, -2.044563e-002, -1.964699e-002, -1.544287e-002, -1.666268e-002, -1.953622e-002, -2.286039e-002, -2.403007e-002, -3.478678e-002, -3.638272e-002, -3.474874e-002, -3.137712e-002, -2.414521e-002, -2.365469e-002, -1.993397e-002, -1.205814e-002, 3.509211e-004, 1.412515e-002, 5.308597e-003, -6.682196e-003, -1.004810e-002, 9.285352e-003, -5.415537e-004, 3.953314e-003, 2.633782e-002, 1.055470e-003, -2.324757e-002, 1.102469e-002, 9.948708e-004, 1.638107e-002, 2.886503e-003, -1.029543e-002, 7.838453e-003, 5.316108e-003, -2.136066e-003, 1.265780e-002, 1.387751e-002, 3.852418e-003, -1.244778e-002, -1.536546e-002, -2.723693e-003, 1.555965e-003, -2.999865e-003, -1.846627e-002, -2.346710e-002, -1.054949e-002, 1.059391e-002, 1.623497e-002, 7.794197e-003, 2.088804e-003, -3.202116e-003, -8.064778e-003, -1.025807e-002, -1.326711e-002, -1.527211e-002, -1.367229e-002, -1.122921e-002, -8.443866e-003, -6.547634e-003, -7.644503e-003, -1.228257e-002, -7.586660e-003, 6.756708e-003, 1.553977e-002, 6.023919e-003, -8.981443e-003, -1.116277e-002, -1.194072e-003, -6.942152e-003, 1.397760e-002, 1.613279e-002, -9.947603e-003, -1.368861e-002, 2.297848e-002, 8.188927e-003, 1.968857e-002, 1.054390e-002, -2.237509e-003, 6.852864e-003, 7.976294e-003, -2.470233e-003, 5.954856e-003, 5.451637e-003, 4.263459e-004, -9.609881e-003, -1.527653e-002, -1.595812e-002, -1.261920e-002, -1.037607e-002, -1.589667e-002, -1.439234e-002, -4.449706e-003, 1.690708e-004, -6.025543e-003, -1.051227e-002, -3.017405e-003, 8.928680e-004, 3.505828e-003, -1.774958e-003, -5.536236e-003, -4.224099e-003, -6.266050e-003, -1.376355e-002, -1.625214e-002, -7.576946e-003, 4.052761e-003, 3.217811e-003, 4.895350e-003, 1.463073e-002, 1.768487e-002, 7.351185e-003, -8.275860e-003, -1.062659e-002, -1.076941e-002, -1.305414e-002, 6.272126e-003, 1.297824e-003, -1.084107e-002, -5.847274e-003, 3.164004e-002, 1.374188e-002, 2.041206e-002, 1.281264e-002, 4.079776e-003, 8.603314e-003, 3.049842e-003, -1.221286e-002, -4.921954e-003, -3.872498e-003, -4.326447e-003, 3.146276e-003, -4.719344e-003, -2.230934e-002, -2.239891e-002, -1.582026e-002, -1.565848e-002, -1.631589e-002, -1.755360e-002, -2.426843e-002, -2.755042e-002, -1.684235e-002, -9.507261e-004, 7.026948e-003, 9.628434e-003, 1.140111e-002, 8.927621e-003, 3.022886e-003, -7.017800e-003, -1.730240e-002, -2.049776e-002, -6.937326e-003, 8.617983e-003, 8.991435e-003, 1.022059e-002, 1.510881e-002, 1.223571e-002, 2.372703e-003, -7.675556e-003, -7.654082e-003, -1.087741e-002, -1.179670e-002, -1.093475e-003, -5.879749e-003, -7.945875e-003, 1.614161e-003, 3.081211e-002, 8.917565e-003, 1.643316e-002, 1.181451e-002, 1.704903e-003, 3.454594e-003, 2.549201e-003, -1.816414e-002, -2.087908e-002, -1.747621e-002, -1.214377e-002, 8.644643e-003, 1.804949e-003, -2.215845e-002, -2.872377e-002, -2.513105e-002, -2.192257e-002, -1.664818e-002, -4.984732e-003, 1.979644e-003, -4.266244e-003, -1.616319e-004, 5.247173e-003, 1.691463e-003, -1.857848e-003, -2.470576e-003, -9.538317e-003, -9.975602e-003, -5.831875e-003, -4.065207e-003, -4.977996e-003, -1.978601e-003, 5.765497e-003, 8.518333e-003, 9.819209e-003, 1.234875e-002, 1.594926e-003, -6.608908e-003, -9.628802e-003, 3.943971e-004, -2.137291e-003, -5.675231e-003, -4.727463e-003, -8.138490e-003, -3.376726e-003, 3.062812e-002, 2.563223e-002, 3.939780e-003, 5.775974e-003, 3.156934e-003, -1.331346e-002, -4.032526e-003, 1.429173e-003, -1.568563e-002, -2.564647e-002, -1.415860e-002, -1.074662e-002, 6.438102e-003, 1.586207e-002, -1.237316e-002, -2.764674e-002, -3.537540e-002, -3.032706e-002, -1.945100e-002, -4.380216e-003, 1.156272e-003, 2.307918e-003, 8.115344e-003, 7.194615e-003, 8.121778e-003, 1.006251e-002, 1.035877e-002, 7.273495e-003, 6.057645e-003, 3.913347e-004, -6.019848e-003, -9.627503e-003, -1.293666e-002, -1.207764e-002, -8.365875e-003, 1.673975e-003, 3.673750e-003, -8.621553e-003, -1.115451e-002, -7.762132e-003, 7.344692e-003, 5.372277e-004, -1.624206e-003, -1.961539e-003, -1.031696e-002, -5.971098e-003, 2.391270e-002, 1.364722e-002, -5.548650e-003, 2.489898e-003, 2.862542e-004, -1.943918e-002, -1.119228e-002, -1.737440e-003, -4.908057e-003, -1.017111e-002, 9.505802e-004, 3.578545e-003, 4.760864e-003, 2.013981e-002, 8.645862e-003, -1.414406e-002, -2.665892e-002, -2.816268e-002, -1.893188e-002, -8.913939e-003, -2.949948e-003, -2.680821e-005, 4.538144e-003, 6.886420e-003, 1.065798e-002, 1.480221e-002, 1.866944e-002, 1.576550e-002, 1.358732e-002, 1.116246e-002, 3.367609e-003, -8.904427e-003, -1.692923e-002, -2.151525e-002, -1.853803e-002, -7.297601e-003, -8.285472e-003, -1.458190e-002, -1.074765e-002, -5.092842e-003, 9.457247e-003,


© ISO/IEC 2004 — All rights reserved

Copyright International Organization for Standardization
Provided by IHS under license with ISO
No reproduction or networking permitted without license from IHS
Not for Resale

7.264168e-003, 8.002092e-003, 5.399864e-003, -4.348529e-003, -9.159984e-003, 1.595857e-002, 4.259294e-003, -7.701876e-003, -5.376372e-003, -3.220559e-003, -1.408359e-002, -9.768652e-003, -7.317778e-004, 1.024461e-002, 1.308783e-002, 1.649474e-002, 1.146000e-002, -2.435917e-004, 9.106595e-003, 2.493911e-002, 7.925731e-003, -5.559739e-003, -1.295352e-002, -9.551918e-003, -1.093734e-003, -4.279877e-003, -8.530785e-003, -6.163563e-003, -1.318523e-003, 4.067345e-003, 8.444046e-003, 1.130924e-002, 1.150675e-002, 8.547165e-003, 7.385490e-003, 1.119661e-003, -7.133577e-003, -9.600058e-003, -1.829962e-002, -1.671361e-002, -1.293058e-002, -1.079675e-002, -7.451122e-003, -3.462401e-003, -2.366828e-003, -2.388939e-003, -1.259315e-003, 1.049283e-002, 9.664972e-003, -1.943987e-004, -1.041917e-002, 5.160548e-003, 1.080163e-003, -5.432432e-003, -8.824390e-003, 4.479162e-003, 1.875633e-002, -2.737982e-003, 6.661637e-003, 2.135083e-002, 2.675418e-002, 1.503933e-002, 7.416200e-003, -1.916086e-003, 4.189684e-003, 2.614292e-002, 2.438128e-002, 1.407897e-002, 6.749425e-003, 7.316560e-003, 1.047534e-002, 1.724578e-003, -8.129212e-004, -2.741761e-003, 9.560493e-004, 4.229830e-003, 7.893233e-003, 1.256823e-002, 1.440905e-002, 1.340410e-002, 8.410573e-003, 1.422346e-003, -5.040393e-004, -5.282923e-004, -8.206687e-003, -1.105533e-002, -8.551873e-003, 1.938714e-004, 8.865519e-003, 7.675829e-003, -6.397699e-003, -9.463626e-003, -1.007710e-002, 8.464371e-003, 1.090065e-002, -4.451855e-003, -1.453384e-002, 5.041208e-003, 6.079540e-003, 2.475895e-003, -1.296621e-002, 7.436764e-003, 2.452675e-002, 3.527312e-003, 9.009873e-003, 1.246424e-002, 1.879817e-002, 1.087830e-002, 3.453189e-003, -2.638592e-003, -6.224324e-003, 1.449706e-002, 2.073121e-002, 1.825017e-002, 1.426993e-002, 1.399936e-002, 1.318873e-002, 8.377725e-003, 6.370012e-003, 2.904530e-003, 4.576613e-003, 5.991060e-003, 5.533844e-003, 8.535421e-003, 1.135525e-002, 1.312405e-002, 5.421973e-003, -1.355001e-003, -2.305412e-003, -1.969824e-005, -2.796075e-003, -8.654880e-003, -7.809582e-003, 5.156585e-003, 2.029250e-002, 1.371410e-002, -7.278698e-003, -1.602763e-002, -1.032042e-002, 5.290875e-003, 8.624182e-003, -7.441086e-003, -2.396671e-002, 1.035582e-002, 1.515790e-002, 9.531397e-003, -1.931478e-002, -1.500700e-004, 2.326059e-002, -6.351170e-003, -1.374129e-002, -1.511110e-002, -4.038898e-003, 1.771193e-003, -5.688145e-003, -5.095754e-003, -1.632847e-002, -6.560696e-003, 7.102004e-003, 6.390157e-003, 8.696198e-005, 2.793083e-003, 6.221456e-003, 7.204197e-003, 3.909237e-003, 5.581429e-003, 7.049562e-003, 1.192251e-002, 1.259262e-002, 1.415315e-002, 1.557406e-002, 1.468102e-002, 6.819812e-003, -7.714426e-004, -2.396277e-003, -6.929772e-003, -9.469598e-003, -1.322601e-002, -1.359528e-002, -1.050177e-003, 1.658944e-002, 8.870665e-003, -7.570728e-003, -1.746031e-002, -1.233337e-002, -8.383394e-004, -3.192127e-003, -1.941792e-002, -3.170639e-002, 4.646318e-003, 6.338899e-003, 8.294716e-003, -2.985686e-002, -1.503234e-002, 4.273100e-003, -2.994611e-002, -3.780006e-002, -3.317653e-002, -1.148856e-002, -1.301264e-002, -2.182775e-002, -6.335233e-003, -3.496168e-002, -3.489869e-002, -1.109710e-002, -3.047992e-003, -1.255532e-002, -1.799542e-002, -1.927611e-002, -1.152680e-002, -4.891967e-003, -1.673296e-003, 1.721135e-004, 3.834493e-003, 4.381594e-003, 6.876328e-003, 9.191847e-003, 7.876903e-003, 3.974128e-003, -6.431040e-003, -1.645304e-002, -2.280523e-002, -2.347777e-002, -2.432864e-002, -2.330299e-002, -1.581114e-002, -9.451444e-003, -9.324488e-003, -8.541243e-003, -1.442580e-002, -2.181531e-002, -1.208996e-002, -9.548732e-003, -3.141599e-002, -4.484358e-002, -1.392435e-002, -1.358115e-002, -1.189590e-002, 4.285690e-003, 1.996127e-002, 3.753934e-002, 9.071591e-003, 3.377211e-003, 1.532780e-002, 2.574158e-002, 1.222384e-002, 1.282722e-003, 2.292848e-002, -3.674867e-003, -1.186736e-002, 1.384142e-002, 2.872421e-002, 1.771183e-002, -1.258949e-003, -1.238937e-002, -1.005224e-002, 3.198399e-003, 1.111894e-002, 1.497659e-002, 1.794625e-002, 1.790143e-002, 2.335435e-002, 2.957346e-002, 2.985974e-002, 2.478573e-002, 1.398589e-002, 5.877395e-003, 5.092585e-003, 7.683205e-003, 1.075955e-002, 5.490744e-003, -9.565720e-004, -3.677765e-003, -7.688223e-003, 1.521712e-002, 1.889717e-002, -6.970295e-003, 2.192417e-003, 1.568977e-002, 5.511928e-003, -1.309812e-002, -2.554058e-002, -3.635755e-002, -3.120115e-002, -5.742396e-003, 2.204171e-003, 1.437567e-002, -8.401332e-003, -1.095348e-002, -2.329516e-003, -4.368218e-003, -1.815820e-002, -2.484261e-002, 7.100721e-003, -7.164197e-003, -1.822561e-002, -5.134087e-003, 7.819524e-003, 1.424967e-003, -2.094888e-002, -3.421789e-002, -3.526564e-002, -3.213975e-002, -2.770850e-002, -2.427247e-002, -2.104996e-002, -1.748637e-002, -1.488517e-002, -9.420210e-003, -8.707438e-003, -1.143691e-002, -1.456464e-002, 1.162024e-002, 1.942831e-002, 2.631885e-002, 3.172850e-002, 2.170246e-002, 1.098905e-002, 6.445142e-003, 6.119002e-003, 3.375927e-002, 4.360966e-002, 7.836182e-003, 1.603922e-002, 2.838849e-002, 3.981859e-002, 3.012439e-002, 2.011482e-002, -6.420112e-003, -2.430305e-003, -1.982729e-002, -1.106336e-002, -1.290216e-002, 5.213214e-004, -4.824669e-003, -7.012660e-003, -6.530922e-003, -6.720936e-003, -5.493332e-003, 2.532790e-002, 1.667556e-002, 4.256648e-003, 5.421061e-004, 4.665929e-003, 7.712998e-003, 1.456441e-003, -3.584266e-003, 1.887435e-003, 9.517465e-003, 7.074769e-003, 4.269522e-003, -2.489391e-003, -2.476835e-003, -5.700902e-004, 7.958622e-004, 2.271921e-004, -8.638719e-004, -5.190185e-004, 8.553540e-003, 1.679322e-002, 1.399882e-002, 8.165459e-003, -1.091394e-003, 2.466550e-003, -3.984525e-003, -1.539094e-002, 1.017033e-002, 2.396459e-002, -1.229644e-002, -3.961063e-003, 7.060051e-003, 1.057916e-002, 1.111138e-002, 1.067110e-002, -9.464421e-004, 5.756603e-004, -4.112090e-003, -7.894226e-003, -1.221755e-002, -3.132783e-003, -2.959345e-004, -6.661395e-004, 4.757745e-003, 3.140522e-003, -

© ISO/IEC 2004 — All rights reserved


Copyright International Organization for Standardization
Provided by IHS under license with ISO
No reproduction or networking permitted without license from IHS
Not for Resale

1.127827e-002, 3.284756e-003, 1.124857e-004, -5.113504e-003, -8.486219e-003, -1.547140e-002, -1.484477e-002, -1.035381e-002, -6.254336e-003, 7.281810e-004, 1.324537e-002, 1.557365e-002, 8.666743e-003, 4.494822e-004, -5.037052e-003, -4.620227e-003, -2.974188e-003, -8.840471e-004, -1.803557e-003, 1.702878e-003, 6.886068e-003, 6.030984e-004, -1.204098e-002, -1.417975e-002, -1.278181e-002, 8.485351e-003, 2.798789e-003, -2.860610e-002, -1.454220e-002, -2.152805e-003, -2.077322e-002, -1.726421e-002, 6.393069e-003, -3.704036e-003, -9.084713e-003, -1.561412e-002, -9.477643e-003, 1.872400e-003, 5.853031e-003, -9.582360e-004, -6.628825e-003, 1.804517e-002, 1.971279e-002, 6.608125e-003, -9.063837e-005, -5.932132e-003, -6.604909e-003, -6.320936e-003, -1.557671e-003, -5.598815e-003, -6.044101e-003, -1.569500e-002, -1.908101e-002, -1.617586e-002, -9.270935e-003, 2.716083e-003, 1.159564e-002, 1.377089e-002, 1.207832e-002, 4.132250e-003, 1.175138e-003, -1.560284e-003, -2.678964e-003, -5.162962e-003, -4.656275e-003, -2.899053e-003, -5.224100e-003, -1.282858e-002, -2.674857e-002, -2.677782e-002, -1.502332e-002, 1.172381e-002, 9.378552e-003, -1.801729e-002, -8.221100e-003, -8.894527e-004, -2.514588e-002, -2.623119e-002, -1.203115e-003, 5.763839e-003, 7.100771e-005, -2.205835e-002, -1.920231e-002, -4.435025e-003, -6.580428e-005, -8.767057e-003, -7.755728e-003, 7.512112e-003, 8.184906e-003, -7.722309e-003, -1.548763e-002, 3.495192e-003, 6.330679e-003, -5.010978e-003, 1.937361e-003, 5.298855e-003, 4.127957e-003, 2.521926e-003, -7.409930e-003, -1.106831e-002, -1.429983e-003, 6.356393e-003, 6.043730e-003, -1.159009e-003, -1.019179e-002, -2.006384e-002, -2.415164e-002, -2.744664e-002, -2.575650e-002, -2.302967e-002, -1.949336e-002, -1.436308e-002, -7.532610e-003, -1.159800e-002, -2.002333e-002, -1.250186e-002, -5.433949e-003, 2.316094e-002, 2.772467e-002, -5.814177e-003, 1.651865e-002, 3.227094e-002, 7.366276e-003, -8.384402e-003, -7.756353e-003, 1.038812e-002, 2.525308e-002, 8.892275e-005, -8.969814e-003, -4.158450e-003, -1.889919e-002, -1.429667e-002, -9.169746e-003, 1.534403e-003, -1.459065e-003, -1.088181e-002, -9.568085e-003, 7.478887e-003, 6.973291e-003, -4.545885e-003, -2.164341e-003, 7.773613e-003, 8.803335e-003, 9.345211e-003, 4.780040e-003, 5.463761e-003, 9.203979e-003, 1.723697e-002, 1.772482e-002, 1.492897e-002, 5.673207e-003, -3.060074e-003, -6.948485e-003, -4.986531e-003, -1.896434e-003, 5.542002e-003, 1.191284e-002, 1.709277e-002, 1.654624e-002, 8.814515e-003, 7.549437e-003, 3.606589e-003, 4.182258e-003, -2.892580e-004, -5.615979e-003, -3.018055e-002, -1.195646e-002, 3.110921e-003, -1.082736e-002, -2.480337e-002, -3.306437e-002, -2.092810e-002, 1.706903e-003, -6.681697e-003, -2.110121e-002, -2.739959e-002},
{2.337053e-002, 2.237097e-002, 2.064951e-002, 4.125882e-003, -1.748901e-003, 9.328930e-003, 7.886946e-003, -4.076337e-003, -1.163523e-002, -1.506125e-002, -2.698430e-002, -3.214419e-002, -3.172614e-002, -2.969994e-002, -2.413003e-002, -2.019849e-002, -1.818392e-002, -1.581473e-002, -1.105982e-002, -1.133161e-002, -1.283296e-002, -1.156527e-002, -7.140741e-003, -4.551778e-003, -3.274514e-003, -8.226724e-003, -1.340243e-002, -1.451548e-002, -1.666167e-002, -1.006128e-002, -1.627630e-003, 1.156472e-003, 2.310447e-003, -2.860486e-003, -9.167478e-003, -9.464377e-003, -1.462099e-003, 1.326104e-002, 6.167145e-003, 3.209473e-003, 9.220015e-003, 1.087694e-002, 3.011065e-003, -5.917696e-003, 4.859903e-003, 2.453800e-002, 1.291490e-002, 4.356668e-003, 1.374913e-003, -1.450085e-002, -1.907225e-003, 1.440964e-002, 1.556834e-002, 6.195293e-003, 3.447312e-003, 1.492697e-003, 1.883816e-003, 1.225461e-003, 1.073917e-003, 4.134036e-003, 5.170930e-003, 1.291284e-003, -1.847265e-003, -1.945090e-003, 1.619782e-003, 3.117849e-003, 3.487633e-003, 3.784869e-003, 6.424995e-003, 9.409443e-003, 1.076827e-002, 1.182694e-002, 1.492000e-002, 1.317070e-002, 5.140619e-003, 3.091807e-004, 3.223474e-003, 4.335959e-003, 4.565523e-003, 1.090821e-003, -1.044210e-002, -1.667302e-002, -1.591477e-002, -5.468922e-003, -2.844640e-003, -1.031816e-002, -6.500775e-003, 1.864533e-003, 2.099434e-003, -4.927943e-003, -7.629086e-003, 1.752429e-002, 9.477127e-003, -2.099062e-003, -7.651359e-003, -1.179452e-002, 6.561035e-003, 1.393041e-002, 9.294210e-003, 1.053041e-003, 6.733641e-003, 6.310576e-003, 7.071522e-003, 1.093969e-002, 5.514415e-003, -2.946833e-003, -1.295469e-002, -1.402374e-002, -1.682441e-002, -1.311183e-002, -5.875848e-003, -5.145389e-003, -8.225956e-003, -1.322790e-002, -1.697611e-002, -2.071540e-002, -1.976571e-002, -1.582327e-002, -7.427631e-003, 1.535742e-003, 1.011903e-002, 9.750683e-003, 2.561616e-003, -7.874659e-003, -1.121981e-002, -4.322699e-003, -8.115677e-003, -1.415237e-002, -1.801442e-002, -8.933682e-003, -8.425812e-004, -7.652726e-003, -1.459369e-002, -3.405217e-003, 7.779639e-003, -2.755001e-003, -1.391021e-002, 5.631913e-003, 6.149168e-003, -8.067546e-003, -6.357089e-003, -7.040535e-003, 3.505087e-003, -5.862504e-004, -5.527029e-004, 7.464803e-003, 1.025451e-002, 1.135671e-002, 1.854332e-002, 1.421302e-002, 2.351461e-003, -6.532113e-003, -1.287192e-002, -1.684069e-002, -1.229894e-002, -7.105287e-003, -6.188177e-003, -1.175784e-002, -1.513928e-002, -2.138845e-002, -2.721632e-002, -3.654275e-002, -3.797913e-002, -3.065646e-002, -2.182149e-002, -1.280660e-002, -1.186021e-003, 8.554637e-003, 1.417617e-002, 5.279968e-003, -1.132960e-002, -1.538361e-002, -1.509162e-003, -4.952422e-003, -1.582785e-002, -7.010160e-003, 9.550710e-003, 7.353327e-003, -8.270839e-003, -1.003942e-002, 9.606704e-003, 8.418648e-003, -1.129201e-002, 8.159126e-004, 1.707783e-002, 3.962104e-003, 1.106741e-002, 9.705788e-003, 4.336940e-003, -3.107806e-003, 6.959828e-003, 1.389206e-002, 1.416296e-002, 2.138694e-002, 2.521274e-002, 1.375505e-002, 4.858723e-003, -8.241318e-004, -1.496826e-003, -4.266195e-003, -6.196148e-003, -4.299869e-003, -1.952196e-003, -3.698201e-003, -8.270369e-003, -1.099745e-002, -1.696972e-002, -2.720485e-002, -


© ISO/IEC 2004 — All rights reserved

Copyright International Organization for Standardization
Provided by IHS under license with ISO
No reproduction or networking permitted without license from IHS
Not for Resale

3.117947e-002, -2.528321e-002, -1.866286e-002, -8.567027e-003, -3.715069e-003, 4.144695e-003, 9.938567e-003, 1.444131e-002, 7.519736e-003, -1.030679e-002, -1.795613e-002, -1.819242e-003, -2.152545e-004, -6.517276e-003, 8.948541e-003, 1.690697e-002, 9.869479e-004, -1.136798e-002, 2.320888e-003, 1.337096e-002, -7.369039e-003, -2.160959e-003, 1.927009e-002, 1.156747e-002, 1.721804e-002, 4.887295e-003, -6.424823e-003, -3.861656e-004, 5.470257e-003, 8.788460e-003, 1.126814e-002, 1.551974e-002, 5.596279e-003, 6.593560e-004, -3.691640e-003, -1.321280e-003, -4.253298e-003, -1.030212e-002, -1.093422e-002, -3.253915e-003, 5.886739e-004, 7.420170e-004, -1.230555e-003, -4.695781e-003, -1.323963e-002, -2.259393e-002, -2.816475e-002, -2.840870e-002, -2.314696e-002, -1.325771e-002, -9.149120e-003, -8.001969e-003, -9.979095e-003, -8.397859e-003, -8.192976e-003, -1.150852e-002, -2.214794e-002, -2.797701e-002, -7.137296e-003, -1.781026e-003, -3.612879e-004, 1.866636e-002, 6.794698e-003, -5.799506e-003, -3.919673e-003, 9.543855e-003, 3.723807e-003, 7.875554e-003, 2.354261e-002, 1.384352e-002, 1.175133e-002, -2.569502e-003, -4.307674e-003, 1.690340e-003, 2.980395e-003, -6.728415e-004, 7.433627e-003, 1.496346e-003, -2.084602e-005, 8.781080e-004, -6.160436e-004, -7.513618e-003, -1.425692e-002, -1.748899e-002, -1.811257e-002, -8.877538e-003, 7.113080e-004, 6.143729e-003, 4.108520e-003, -3.848750e-003, -1.188034e-002, -1.976977e-002, -2.648651e-002, -3.281390e-002, -3.153217e-002, -2.197459e-002, -1.185868e-002, -6.514787e-003, -1.287527e-002, -2.495016e-002, -2.994877e-002, -2.650455e-002, -2.023556e-002, -2.545099e-002, -2.035219e-002, -6.423096e-003, -2.100972e-003, 1.029200e-002, 5.155803e-003, -6.617543e-003, -5.542461e-003, 6.883818e-004, 2.479574e-003, 1.115457e-002, 2.458708e-002, 5.852453e-003, -4.632933e-003, -5.225871e-003, 1.274633e-004, -7.205163e-004, -6.178049e-003, -1.056043e-002, -4.101462e-003, -2.014961e-003, 7.727402e-003, 4.167837e-003, -3.839787e-003, -1.642847e-002, -2.512131e-002, -2.992312e-002, -2.495398e-002, -8.526469e-003, 1.293911e-003, 8.728060e-003, 6.872950e-003, -2.401233e-003, -1.252472e-002, -2.211615e-002, -3.058864e-002, -3.763146e-002, -3.665825e-002, -3.343153e-002, -2.382624e-002, -1.369005e-002, -1.261331e-002, -2.055224e-002, -3.708372e-002, -4.413863e-002, -3.401439e-002, -2.003468e-002, -1.082872e-002, -9.645878e-003, -9.490992e-004, 2.938172e-003, -1.234200e-003, -8.945937e-003, -2.450498e-003, -8.177289e-004, 2.575302e-004, 1.108460e-002, 2.117844e-002, -3.806951e-003, -9.335803e-003, -6.292124e-003, -2.895494e-003, -2.934838e-003, -1.515683e-002, -1.706393e-002, -5.255866e-003, 4.073395e-003, 3.397251e-003, 3.455036e-003, -6.619312e-003, -2.019269e-002, -2.977846e-002, -3.172819e-002, -1.578123e-002, 2.910634e-003, 1.227541e-002, 1.584086e-002, 8.260950e-003, -6.925917e-003, -2.307040e-002, -3.610822e-002, -4.379595e-002, -4.586128e-002, -4.344109e-002, -3.941221e-002, -3.407022e-002, -2.245170e-002, -1.643558e-002, -1.665089e-002, -2.565857e-002, -4.158745e-002, -3.971984e-002, -2.162900e-002, -2.972565e-003, 4.232436e-004, 1.939497e-003, 5.552898e-003, -1.036001e-002, -1.465642e-002, -3.086593e-003, 7.147418e-003, 2.022758e-003, 1.048010e-002, 1.707997e-002, -8.082958e-003, -7.988094e-003, -5.286445e-003, -4.327096e-003, -9.159242e-003, -1.941525e-002, -1.603916e-002, -4.170267e-003, -5.316921e-005, -7.206019e-005, 1.741138e-003, -1.154760e-003, -1.555979e-002, -2.642388e-002, -1.853590e-002, 1.193744e-003, 1.533389e-002, 1.955404e-002, 1.232647e-002, -2.085247e-003, -2.194530e-002, -4.179058e-002, -5.552879e-002, -5.791362e-002, -5.739640e-002, -5.449581e-002, -4.715213e-002, -3.757164e-002, -2.208933e-002, -1.264039e-002, -9.245052e-003, -9.330084e-003, -2.215254e-002, -3.251543e-002, -2.610621e-002, -2.426739e-003, 1.247822e-002, 8.745238e-003, 1.249578e-002, -1.256732e-003, -1.902172e-002, -5.573986e-003, 9.889934e-003, 1.275767e-003, 8.718784e-003, 1.417942e-002, 5.854411e-003, -2.343218e-003, -1.174779e-003, -8.723501e-003, -7.138593e-003, -1.869714e-002, -1.419253e-002, -2.302970e-003, -3.657183e-003, -2.123415e-003, 9.394916e-003, 6.191206e-003, -6.867084e-003, -1.478650e-002, -6.419599e-003, 6.396111e-003, 1.356664e-002, 1.364981e-002, -4.602294e-004, -1.650590e-002, -3.509531e-002, -5.229842e-002, -6.294922e-002, -6.463791e-002, -6.386499e-002, -5.816032e-002, -5.433240e-002, -4.265535e-002, -2.461979e-002, -1.203572e-002, -4.453941e-003, 2.711249e-003, 5.073588e-004, -8.348308e-003, -1.519124e-002, -2.272716e-003, 1.846610e-002, 1.560442e-002, 7.436060e-003, 7.567599e-003, -1.436596e-002, -8.776014e-003, 1.681896e-002, 5.683394e-003, 1.014648e-002, 9.363109e-003, 3.468083e-003, 3.217472e-003, 2.493673e-003, -7.352032e-003, -4.094298e-003, -1.616159e-002, -1.187706e-002, -4.161485e-003, -4.448724e-003, 4.729586e-003, 2.204461e-002, 1.357125e-002, 1.908893e-003, -1.387802e-003, 4.137735e-003, 9.972941e-003, 1.330061e-002, 1.393224e-002, 2.710547e-003, -1.491190e-002, -2.993939e-002, -4.220296e-002, -5.014633e-002, -5.097814e-002, -4.972132e-002, -4.508233e-002, -4.292763e-002, -4.081373e-002, -2.562894e-002, -1.154456e-002, -2.581970e-003, 5.397324e-003, 1.267423e-002, 1.405582e-002, 5.866503e-003, 3.050960e-003, 2.125007e-002, 1.807580e-002, 4.131116e-003, 6.265859e-003, 1.043197e-003, -7.891306e-003, 1.955169e-002, 9.026690e-003, 8.758613e-003, 2.910531e-003, 6.296679e-003, 1.078891e-002, 2.947819e-003, 3.871670e-003, 5.961542e-003, -1.188166e-002, -6.857048e-003, -4.806617e-003, -3.052792e-003, 1.411549e-002, 2.223769e-002, 1.482180e-002, 1.032673e-002, 1.369329e-002, 1.901983e-002, 2.432410e-002, 3.113247e-002, 3.180626e-002, 2.184969e-002, 6.452942e-003, -5.531350e-003, -1.188144e-002, -1.456666e-002, -1.748387e-002, -2.219427e-002, -2.033760e-002, -1.946090e-002, -2.174215e-002, -1.492728e-002, -5.224897e-003, 2.001190e-003, 6.286346e-003, 1.493652e-002, 2.409419e-002, 2.152114e-002, 1.394856e-002, 2.120806e-002, 1.826825e-002, 2.834026e-003,

© ISO/IEC 2004 — All rights reserved


Copyright International Organization for Standardization
Provided by IHS under license with ISO
No reproduction or networking permitted without license from IHS
Not for Resale

2.538912e-003, 1.187903e-002, -4.721407e-004, 2.456189e-002, 7.774284e-003, 4.251862e-003, -1.446530e-003, 1.142908e-002, 1.817268e-002, 8.551182e-003, 1.113322e-002, 1.579217e-002, -5.598385e-003, -3.559844e-003, -2.742583e-003, 3.323405e-004, 1.344242e-002, 1.918815e-002, 2.034039e-002, 2.214558e-002, 2.688238e-002, 3.301530e-002, 4.123109e-002, 5.314440e-002, 5.402552e-002, 4.792194e-002, 3.799282e-002, 3.193889e-002, 3.368247e-002, 3.221868e-002, 2.793424e-002, 1.866169e-002, 1.619438e-002, 1.290758e-002, 1.013234e-002, 1.122723e-002, 1.451877e-002, 1.182579e-002, 1.070844e-002, 1.373962e-002, 2.378147e-002, 2.736404e-002, 2.340811e-002, 2.490693e-002, 1.673204e-002, -2.391203e-003, -1.227986e-003, 1.721103e-002, 1.269373e-002, 2.965007e-002, 9.133245e-003, 3.814321e-003, -6.302586e-003, 1.940997e-002, 2.099513e-002, 1.167903e-002, 1.067953e-002, 2.397440e-002, -1.132912e-003, 3.924823e-003, 4.957316e-003, -7.169703e-005, 8.308455e-003, 1.897558e-002, 2.268168e-002, 2.944701e-002, 3.525365e-002, 4.086741e-002, 5.013059e-002, 6.282232e-002, 6.911095e-002, 7.196041e-002, 6.759716e-002, 6.902483e-002, 7.000918e-002, 6.952645e-002, 6.744510e-002, 5.812494e-002, 5.001797e-002, 4.778093e-002, 4.179850e-002, 3.785803e-002, 2.985296e-002, 2.283207e-002, 1.759666e-002, 1.260659e-002, 1.428340e-002, 2.135279e-002, 2.439036e-002, 2.765335e-002, 1.995092e-002, -2.196829e-003, -3.666787e-003, 1.943329e-002, 1.979537e-002, 3.393289e-002, 1.037935e-002, 1.413012e-003, -1.257089e-002, 1.942131e-002, 1.474557e-002, 8.518268e-003, 6.234165e-003, 2.291700e-002, 1.569204e-003, 8.729011e-003, 9.736887e-003, 2.940313e-004, 8.821785e-003, 2.128085e-002, 2.617733e-002, 3.197886e-002, 3.539007e-002, 3.680595e-002, 4.247579e-002, 5.414340e-002, 6.708696e-002, 7.443901e-002, 7.997411e-002, 8.321162e-002, 8.385972e-002, 8.035495e-002, 7.843558e-002, 7.163380e-002, 6.247575e-002, 5.737889e-002, 5.163173e-002, 4.283607e-002, 3.464082e-002, 2.593436e-002, 1.739056e-002, 5.147473e-003, -2.074769e-003, 1.140475e-002, 2.209313e-002, 2.318652e-002, 1.535667e-002, -4.230697e-003, -3.067850e-003, 1.772414e-002, 1.437552e-002, 2.696063e-002, 1.044573e-002, 2.739182e-003, -1.689011e-002, 1.531766e-002, 6.657188e-003, 5.479302e-003, 1.344324e-003, 1.797421e-002, 6.634495e-003, 1.342178e-002, 1.678653e-002, 6.115057e-003, 1.219691e-002, 2.299613e-002, 2.235760e-002, 2.164584e-002, 1.904341e-002, 1.460362e-002, 1.110981e-002, 1.891012e-002, 3.527749e-002, 5.026659e-002, 6.357626e-002, 7.020983e-002, 7.074092e-002, 6.710542e-002, 6.507715e-002, 5.718690e-002, 4.667001e-002, 4.221023e-002, 3.616842e-002, 3.000982e-002, 2.657970e-002, 2.319968e-002, 1.515253e-002, 2.224217e-003, -8.500879e-003, 2.807913e-003, 2.165637e-002, 2.764935e-002, 1.093089e-002, -6.148458e-003, 3.486766e-003, 1.502705e-002, 3.929327e-003, 1.361977e-002, 1.111561e-002, 3.885550e-003, -2.188584e-002, 5.910271e-003, -4.398364e-003, 2.353828e-003, -4.873191e-003, 1.364399e-002, 1.528629e-002, 1.881508e-002, 2.101898e-002, 1.103863e-002, 8.035594e-003, 1.178867e-002, 7.417560e-003, 6.415816e-003, 6.585948e-003, -3.673999e-003, -1.232382e-002, -1.635023e-002, -9.344368e-003, 4.246407e-003, 1.946184e-002, 2.733694e-002, 3.022531e-002, 2.758666e-002, 2.316896e-002, 1.146519e-002, 2.185710e-003, -6.024907e-004, 4.737343e-003, 1.453993e-002, 2.628897e-002, 3.634130e-002, 3.581540e-002, 2.166874e-002, 3.090446e-003, 4.427929e-003, 2.477540e-002, 3.593708e-002, 1.356879e-002, -9.608822e-004, 1.213757e-002, 1.514143e-002, -5.169793e-003, 1.202527e-003, 5.420996e-003, 4.907153e-003, -2.060968e-002, -1.616891e-003, -1.108902e-002, -2.377923e-003, -1.097673e-002, 1.121471e-002, 1.951519e-002, 2.075952e-002, 2.375246e-002, 1.698770e-002, -1.016240e-003, 9.409793e-003, 2.111882e-002, 2.336609e-002, 1.661610e-002, 1.309963e-003, -9.871134e-003, -1.695996e-002, -2.102877e-002, -2.697894e-002, -3.018153e-002, -2.720167e-002, -1.953718e-002, -2.322008e-002, -3.296590e-002, -4.634785e-002, -5.122765e-002, -4.539556e-002, -2.317239e-002, 5.111629e-003, 3.004339e-002, 5.756063e-002, 7.163270e-002, 6.886803e-002, 3.929672e-002, 1.875863e-002, 2.730574e-002, 3.855603e-002, 1.468680e-002, 1.168005e-002, 2.258681e-002, 1.849453e-002, -3.851291e-003, -5.579200e-003, 2.471216e-004, 7.107231e-003, -1.732084e-002, -7.561057e-003, -1.744215e-002, -4.766882e-003, -1.202585e-002, 8.837305e-003, 1.949863e-002, 2.104566e-002, 2.698562e-002, 1.241180e-002, -7.170685e-003, 2.337530e-002, 4.586032e-002, 4.850439e-002, 2.696513e-002, -1.534679e-003, -2.341162e-002, -3.211967e-002, -3.011439e-002, -3.136524e-002, -3.849979e-002, -3.795874e-002, -3.320122e-002, -3.635392e-002, -5.137577e-002, -6.857300e-002, -7.542568e-002, -7.274430e-002, -5.855549e-002, -4.057903e-002, -1.326661e-002, 3.234726e-002, 7.205403e-002, 8.834612e-002, 6.151375e-002, 2.516800e-002, 2.505235e-002, 3.709812e-002, 1.538993e-002, 1.672449e-002, 3.548247e-002, 2.238284e-002, -2.395430e-003, -2.177612e-003, -7.417585e-003, 7.419521e-003, -1.407906e-002, -1.474321e-002, -1.812182e-002, -6.888389e-003, -1.261276e-002, 4.437903e-003, 1.676742e-002, 1.084747e-002, 2.233911e-002, 1.381828e-002, 1.151856e-002, 5.164664e-002, 6.762728e-002, 6.257769e-002, 4.976560e-002, 2.627741e-002, 3.444162e-003, -2.506793e-002, -4.207663e-002, -3.929922e-002, -3.113121e-002, -2.056759e-002, -8.927668e-003, -3.855396e-003, -1.361013e-002, -3.558228e-002, -4.768660e-002, -4.906131e-002, -3.779428e-002, -1.663323e-002, 1.295129e-002, 5.039406e-002, 7.960287e-002, 9.499271e-002, 7.515456e-002, 2.117676e-002, 7.240882e-003, 2.352159e-002, 1.088558e-002, 1.114161e-002, 3.519855e-002, 2.026918e-002, -3.704959e-003, -8.580959e-005, -1.537004e-002, 3.678747e-003, 1.762728e-002, -1.552296e-002, -2.270149e-002, -1.113400e-002, -1.432326e-002, -1.426791e-003, 1.499822e-003, -3.009858e-003, 9.421488e-003, 6.242323e-003,


© ISO/IEC 2004 — All rights reserved

Copyright International Organization for Standardization
Provided by IHS under license with ISO
No reproduction or networking permitted without license from IHS
Not for Resale

6.986440e-003, 2.960347e-002, 1.254464e-002, -3.968944e-004, 9.201791e-003, 1.900534e-002, 1.294038e-002, -9.444745e-003, -3.191417e-002, -4.205023e-002, -3.520178e-002, -1.644629e-002, 6.641691e-003, 3.194308e-002, 2.743725e-002, -4.702297e-003, -2.603086e-002, -3.106740e-002, -1.201643e-002, 7.399538e-003, 1.551771e-002, 2.422329e-002, 3.119070e-002, 3.441309e-002, 3.026104e-002, 6.661729e-004, -9.910891e-003, 3.076178e-003, -1.154652e-003, -3.650349e-003, 1.733191e-002, 7.693210e-003, -1.016222e-003, 4.775444e-003, -2.140939e-002, 5.779820e-003, 2.505474e-002, -7.515066e-003, -1.448306e-002, 2.308285e-003, -2.994062e-003, -9.101482e-003, -1.604915e-002, -2.680717e-002, -1.225360e-002, -9.271092e-003, -1.744009e-002, -2.087202e-002, -4.629101e-002, -2.902218e-002, 1.104853e-002, 4.473102e-002, 5.535991e-002, 2.708873e-002, -8.992761e-005, -8.577624e-003, -2.698118e-002, -3.773372e-002, -1.319605e-002, 2.335121e-002, 3.222374e-002, 4.275311e-003, -1.169611e-002, -2.493476e-002, -2.267229e-002, -1.187277e-002, -1.284687e-002, -5.088511e-003, -1.655034e-002, -3.971162e-002, -3.825494e-002, -3.034546e-002, -3.311053e-002, -2.806742e-002, -2.453122e-002, -2.229743e-002, -3.749002e-003, -5.403874e-003, -3.134000e-003, 5.831495e-003, -1.907125e-002, 1.692620e-002, 3.285326e-002, 6.889197e-003, 6.410069e-003, 2.531158e-002, 1.180622e-002, -5.353899e-004, -3.222257e-003, -2.616402e-002, -4.307072e-003, -1.043474e-002, -3.460470e-002, -2.986301e-002, -1.535915e-002, 5.492372e-003, 1.184604e-002, 4.727124e-002, 5.244861e-002, 1.062446e-002, 1.571944e-002, 3.381676e-002, 1.694401e-003, -5.009535e-002, -2.373386e-002, 1.399595e-002, 1.562346e-002, 1.725961e-003, 9.439788e-003, 3.353372e-003, -1.321227e-002, -2.417501e-002, -6.460666e-003, 5.080740e-003, -1.213177e-002, -5.645877e-002, -6.713262e-002, -5.118758e-002, -4.045213e-002, -4.026953e-002, -3.242295e-002, -3.248475e-002, -9.864677e-003, -1.363014e-002, 3.905440e-003, 8.006837e-003, -1.507960e-002, 2.436303e-002, 4.006449e-002, 1.738168e-002, 2.275112e-002, 4.354661e-002, 2.080573e-002, 2.592260e-003, 3.301086e-003, -1.594269e-002, 1.391859e-002, 3.404032e-003, -5.874003e-003, 1.838949e-002, 3.957504e-002, 8.709225e-003, -4.773978e-002, -8.394593e-003, -1.038502e-003, -2.227972e-002, 2.418145e-002, 4.945430e-002, 8.227747e-003, -3.902986e-002, -1.563758e-002, 1.538558e-002, 3.098261e-003, -3.179214e-005, 2.207924e-002, 2.925356e-002, 7.369411e-003, -1.439768e-002, -1.964773e-003, -8.738012e-003, -2.180595e-002, -5.070975e-003, -1.874196e-002, -2.987982e-002, -2.216730e-002, -1.669463e-002, -2.857955e-003, -2.051695e-002, -1.258778e-003, -1.296697e-002, 6.581984e-003, 8.116730e-003, -1.102679e-002, 1.969541e-002, 4.090512e-002, 1.925526e-002, 2.124156e-002, 3.506191e-002, 9.527000e-003, -1.145954e-002, -1.007824e-003, -1.231542e-002, 1.558158e-002, 5.281374e-003, 5.981712e-003, 2.260790e-002, 2.293056e-002, -3.184247e-003, -2.657112e-002, -2.148879e-002, -8.304807e-003, 5.678192e-003, 3.213720e-002, 4.183231e-002, -2.386822e-003, -2.640211e-002, -8.499155e-003, 1.520989e-002, 6.083727e-003, -6.595463e-003, 9.518957e-003, 2.831881e-002, 2.208291e-002, 6.499195e-003, 6.487855e-003, -2.260617e-003, -2.392831e-003, 1.489197e-002, 1.589818e-002, -1.681519e-004, -1.048539e-002, 5.231503e-003, 3.144885e-002, -4.480907e-004, 7.480207e-003, -8.007066e-003, -2.395456e-003, -4.171062e-004, -1.296635e-002, 1.293024e-002, 3.617518e-002, 1.114006e-002, 8.990201e-003, 1.815845e-002, -2.257862e-003, -1.219019e-002, -2.255609e-003, -1.049116e-002, 7.782985e-003, -1.256279e-003, -1.150144e-002, -2.883447e-003, -1.286466e-003, -1.204643e-002, -2.318932e-002, -1.940271e-002, -7.892553e-003, 6.683065e-003, 2.128475e-002, 1.727693e-002, -8.826642e-003, -1.679297e-002, -7.518816e-003, 1.179313e-002, 3.199404e-003, -2.004537e-002, -5.984545e-003, 2.164746e-002, 2.537564e-002, 1.480124e-002, 2.697318e-003, -5.673051e-003, -1.330718e-003, 6.585735e-003, 4.026215e-003, -7.896676e-003, -1.301258e-002, 1.046022e-002, 2.880276e-002, 9.325817e-004, 1.091932e-002, -1.991896e-003, -6.056417e-003, -4.642776e-003, -1.702889e-002, 5.567321e-003, 1.988781e-002, -2.684771e-003, -8.075056e-003, 5.234119e-003, -8.862792e-004, -5.413878e-003, 5.046471e-003, -6.542741e-003, -1.501712e-003, -6.730042e-003, -2.076265e-002, -2.162436e-002, -1.705550e-002, -2.280152e-002, -2.733181e-002, -2.709256e-002, -1.831386e-002, -8.719566e-003, -1.025923e-002, -2.106450e-002, -1.903806e-002, -2.065792e-002, -9.934786e-003, 3.505971e-003, -2.341888e-003, -2.793072e-002, -2.721232e-002, -1.051480e-002, 1.679547e-002, 1.788024e-002, 7.097846e-003, -2.401771e-003, -3.980124e-003, -8.427787e-003, -1.805680e-002, -2.449842e-002, -1.826994e-002, 8.479187e-003, 1.603528e-002, -3.431345e-003, 1.014903e-002, 6.981678e-003, -1.550257e-004, -7.178877e-003, -1.701348e-002, 7.917060e-005, 7.598653e-003, -1.044610e-002, -2.404117e-002, -6.106334e-003, 5.445877e-003, 2.468175e-003, 1.062111e-002, -1.513941e-003, -1.062280e-002, -1.276664e-002, -2.083468e-002, -2.603979e-002, -2.811399e-002, -3.405366e-002, -3.737159e-002, -3.564699e-002, -2.850577e-002, -2.596683e-002, -3.339483e-002, -3.589178e-002, -2.748252e-002, -2.813227e-002, -1.564639e-002, -5.484514e-003, -4.877273e-003, -2.898734e-002, -4.627863e-002, -3.058540e-002, -1.117471e-002, 3.874899e-003, 4.228941e-003, -4.673951e-003, -1.011991e-002, -1.749537e-002, -2.860603e-002, -2.701101e-002, -1.655997e-002, -2.178797e-004, 6.777171e-003, -1.008890e-002, 7.043000e-003, 7.041027e-003, 6.340901e-003, -4.391837e-003, -9.211439e-003, -1.093625e-002, -1.990374e-003, -3.932728e-004, -2.995849e-002, -1.347384e-002, 9.766177e-003, -1.367990e-003, 1.222640e-002, -2.304539e-003, -1.174880e-002, -2.112290e-002, -2.537325e-002, -2.454043e-002, -2.375250e-002, -3.143691e-002, -3.125705e-002, -2.698586e-002, -2.331270e-002, -2.091388e-002, -2.767385e-002, -3.347487e-002, -3.462115e-002, -3.045142e-002, -2.323873e-002, -1.351328e-002, -7.799075e-003, -2.300495e-002, -

© ISO/IEC 2004 — All rights reserved


Copyright International Organization for Standardization
Provided by IHS under license with ISO
No reproduction or networking permitted without license from IHS
Not for Resale

5.628320e-002, -5.262904e-002, -1.958188e-002, -1.864375e-004, 1.053770e-002, 8.997792e-003, 2.328607e-003, -7.001006e-003, -1.913037e-002, -2.555015e-002, -1.651764e-002, -9.387325e-003, -3.122497e-004, -1.556755e-002, -1.833274e-003, -3.505832e-003, 8.773814e-003, 1.047914e-003, -3.553927e-003, -1.433533e-002, -2.640026e-002, -5.321508e-003, -2.771773e-002, -1.532146e-002, 1.248075e-002, 2.697622e-003, 1.038867e-002, 3.128594e-003, -1.430289e-002, -2.637140e-002, -2.720456e-002, -2.624609e-002, -2.318877e-002, -1.622220e-002, -1.087758e-002, -7.124829e-003, -1.095283e-002, -1.870310e-002, -2.457688e-002, -3.339870e-002, -2.584862e-002, -1.639663e-002, -2.174404e-002, -1.717434e-002, -1.194969e-002, -2.211481e-002, -5.018069e-002, -6.698323e-002, -4.289068e-002, -1.181929e-002, 1.101385e-002, 2.075460e-002, 1.706951e-002, 3.300451e-003, -1.670111e-002, -2.538610e-002, -2.626249e-002, -1.279992e-002, -6.237226e-003, -1.690778e-002, -1.334797e-003, -6.236981e-003, 6.889089e-003, 5.519080e-003, -4.057262e-003, -1.749305e-002, -3.491487e-002, -9.211239e-004, -2.469329e-002, -1.583717e-002, 1.418749e-002, 8.441595e-003, 8.588989e-003, 6.387700e-003, -1.319550e-002, -2.671180e-002, -3.384505e-002, -3.247902e-002, -2.888452e-002, -2.717023e-002, -2.422654e-002, -2.520949e-002, -3.087883e-002, -2.756996e-002, -1.359058e-002, -1.770806e-002, -3.535110e-003, 5.723212e-003, -5.516830e-003, 4.592430e-005, 4.615619e-003, -1.575738e-002, -4.970715e-002, -5.811084e-002, -5.379410e-002, -3.332041e-002, -1.123020e-002, 7.533234e-003, 1.285371e-002, 2.748598e-003, -1.667735e-002, -3.044190e-002, -2.520011e-002, -1.553263e-002, -1.159860e-002, -1.471385e-002, 6.578961e-003, -2.639886e-003, 4.592106e-003, 6.649107e-003, -6.425552e-003, -6.016634e-004, -3.738553e-002, 3.412917e-003, -1.570291e-002, -2.182513e-002, 1.359460e-002, 9.286378e-003, 4.276798e-003, 6.186367e-003, -1.078053e-002, -2.312049e-002, -3.092871e-002, -3.411945e-002, -3.392812e-002, -3.582392e-002, -3.847811e-002, -4.168866e-002, -3.929752e-002, -2.194748e-002, 5.817589e-003, 1.159768e-002, 2.703491e-002, 3.246982e-002, 1.240437e-002, 1.110593e-002, 2.875554e-002, 1.901317e-002, -2.348129e-002, -3.400058e-002, -3.042804e-002, -3.120031e-002, -2.841112e-002, -1.453134e-002, -6.005782e-003, -1.508287e-002, -2.801149e-002, -3.620792e-002, -2.576109e-002, -1.518500e-002, -1.144748e-002, -9.755030e-003, 1.093308e-002, -1.155614e-003, 3.103384e-004, 3.188558e-003, -1.177848e-002, 6.913799e-004, -3.372866e-002, 7.070381e-004, -9.977081e-003, -1.583607e-002, 6.552475e-003, 6.534972e-004, -6.198197e-003, 1.396466e-004, -9.958557e-003, -1.880424e-002, -2.308143e-002, -2.659737e-002, -2.562578e-002, -3.234891e-002, -3.986224e-002, -4.115394e-002, -3.358546e-002, -1.099034e-002, 1.221195e-002, 8.437478e-003, 2.365733e-002, 3.196395e-002, 8.878810e-003, -7.002443e-003, 1.660732e-003, 2.193167e-002, 1.574448e-002, 2.686743e-003, 4.273570e-003, -1.297208e-002, -2.716242e-002, -2.339968e-002, -1.746024e-002, -2.491171e-002, -2.841822e-002, -2.971774e-002, -1.768204e-002, -9.098027e-003, -1.104570e-002, -7.055144e-003, 7.304433e-003, -3.865192e-003, -4.823198e-003, -5.717126e-004, -1.180930e-002, 1.001884e-003, -3.052783e-002, 1.226648e-003, -3.037830e-003, -7.270216e-003, 7.724989e-003, 1.869198e-003, -1.917011e-002, -5.617902e-003, -1.061858e-002, -1.430332e-002, -1.717732e-002, -1.881508e-002, -1.708969e-002, -2.275618e-002, -3.173492e-002, -3.215236e-002, -2.197046e-002, -1.225471e-003, 3.586019e-003, -1.107165e-002, 9.064434e-003, 2.071023e-002, 6.226809e-003, -1.394718e-002, -1.731336e-002, 2.699181e-002, 3.862062e-002, 3.436367e-002, 3.252006e-002, 1.616373e-002, -8.177040e-003, -1.885589e-002, -2.041847e-002, -2.528389e-002, -2.354593e-002, -2.084674e-002, -1.102816e-002, -2.631959e-003, -5.295279e-003, -1.009836e-002, -4.893411e-003, -1.008592e-002, -4.529391e-003, 2.087608e-003, -1.711220e-003, 6.771398e-003, -2.805988e-002, 1.013863e-003, 6.749683e-003, 1.910522e-003, 9.485472e-003, 1.274675e-003, -2.833189e-002, -1.956429e-002, -1.418038e-002, -1.253561e-002, -1.065368e-002, -8.877218e-003, -4.873970e-003, -1.088831e-002, -1.748297e-002, -1.448657e-002, -2.290656e-003, 2.511655e-003, -3.565396e-003, -8.706140e-003, 1.021403e-002, 2.189807e-002, 2.690295e-002, 1.516699e-002, -2.659793e-003, 1.384170e-002, 4.317910e-002, 5.286455e-002, 5.085999e-002, 3.856281e-002, 1.829056e-002, -3.187408e-003, -1.779448e-002, -2.241520e-002, -1.687272e-002, -1.343738e-002, -8.950515e-004, 4.869684e-003, -9.832622e-004, -1.561841e-002, -1.464994e-002, -1.762500e-002, -3.438674e-003, 9.633084e-003, 7.930725e-003, 5.520599e-003, -3.076879e-002, -2.808606e-003, 5.307293e-003, 8.912284e-003, 9.603284e-003, -5.381693e-004, -2.102780e-002, -1.948822e-002, -1.200833e-002, -8.717105e-003, -2.736222e-003, -1.404234e-003, 3.695421e-003, 2.891640e-003, 3.965853e-003, 8.829502e-003, 1.291356e-002, 6.109343e-003, 1.494113e-003, 2.587785e-004, 5.372229e-003, 8.156650e-003, 2.245312e-002, 2.727688e-002, 3.250594e-003, 1.122684e-002, 3.205134e-002, 4.805351e-002, 5.461943e-002, 5.375956e-002, 4.027904e-002, 1.689051e-002, -7.587728e-003, -1.438110e-002, -6.656836e-003, -1.510267e-003, 6.288494e-003, 8.117432e-003, 3.033211e-005, -8.992752e-003, -3.672271e-003, -7.575192e-003, -2.260015e-003, 1.180532e-002, 8.978719e-003, -5.635238e-003, -2.806665e-002, -1.036220e-002, 3.920229e-003, 1.184357e-002, 8.897441e-003, -2.848828e-003, -2.109812e-002, -1.009141e-002, 2.479309e-003, 4.676427e-004, 5.099173e-003, 7.020577e-003, 1.368115e-002, 2.262163e-002, 2.441515e-002, 2.323799e-002, 1.473279e-002, 1.669066e-004, -3.132503e-003, -6.124985e-003, -4.230973e-003, -2.929622e-003, 6.174038e-003, 1.643339e-002, 2.772398e-003, 1.979367e-003, 1.404525e-002, 3.030001e-002, 4.174478e-002, 4.839789e-002, 4.513938e-002, 2.986722e-002, 5.934502e-003, -3.525739e-003, 3.537427e-003, 9.031146e-003, 1.097162e-002, 9.805999e-003, 2.091905e-004, -6.325949e-003, 1.273834e-002, 7.663482e-003, -


© ISO/IEC 2004 — All rights reserved

Copyright International Organization for Standardization
Provided by IHS under license with ISO
No reproduction or networking permitted without license from IHS
Not for Resale

1.353262e-003, 1.098221e-002, 3.088890e-003, -1.222506e-002, -1.339051e-003, -2.197843e-003, 5.443566e-003, 2.046454e-002, 1.743338e-002, -3.786897e-003, -2.226684e-002, -6.210137e-003, 9.951301e-003, 4.936611e-003, 9.975658e-003, 1.464395e-002, 2.458044e-002, 3.711585e-002, 3.653367e-002, 2.581315e-002, 2.868858e-003, -1.451553e-002, -1.207626e-002, -1.412840e-003, 1.174091e-002, 1.807370e-002, 1.817924e-002, 1.915597e-002, 6.810972e-003, -3.330678e-003, -6.254439e-003, 2.241743e-003, 1.269454e-002, 2.678165e-002, 3.329505e-002, 2.716190e-002, 1.296692e-002, 6.563661e-003, 1.141467e-002, 1.065567e-002, 1.040798e-002, 1.114961e-002, -2.513570e-003, -2.632655e-003, 1.185896e-002, 8.373782e-003, -8.525218e-004, 1.373537e-003, -6.467766e-003, -1.828919e-002, 6.631150e-003, 1.385715e-003, 6.677180e-003, 2.331415e-002, 1.960821e-002, -2.717733e-003, -1.470218e-002, -5.829774e-003, 1.356133e-002, 3.948722e-003, 6.980068e-003, 1.851414e-002, 2.916273e-002, 4.398978e-002, 3.653531e-002, 1.425766e-002, -1.182096e-002, -1.931768e-002, -5.796177e-003, 1.397861e-002, 2.873022e-002, 3.106692e-002, 3.109116e-002, 2.350949e-002, 8.224821e-003, -8.506610e-003, -2.452734e-002, -3.517898e-002, -2.568959e-002, 7.357053e-004, 1.717070e-002, 2.219157e-002, 1.879308e-002, 1.592021e-002, 1.672149e-002, 1.283791e-002, 1.018940e-002, 1.384894e-002, -3.857788e-003, -5.876373e-003, 1.494749e-002, 9.542415e-004, -1.215701e-002, -3.790470e-003, -1.686220e-002, -1.669721e-002, 2.317597e-003, -4.998232e-003, 5.829390e-004, 2.032957e-002, 1.894047e-002, 1.058235e-003, -6.827167e-003, -2.716324e-003, 9.367294e-003, -1.773749e-003, 1.322714e-003, 1.836352e-002, 2.604355e-002, 3.752811e-002, 2.964717e-002, 9.977206e-003, 9.387142e-004, 5.897993e-003, 7.578204e-003, -1.778622e-003, -5.755383e-003, -8.719297e-004, 6.995423e-003, 3.196531e-003, -2.448573e-003, -1.326792e-002, -1.784327e-002, -2.275607e-002, -1.260742e-002, 3.579228e-003, 1.175544e-002, 1.239129e-002, 1.384274e-002, 1.569881e-002, 1.575331e-002, 8.045240e-003, 3.449814e-003, 9.292808e-003, -2.244857e-003, -3.809123e-003, 1.127101e-002, -1.017194e-002, -1.872503e-002, -4.769313e-003, -1.464333e-002, -1.139230e-002, -2.159685e-003, -1.035231e-002, -8.580394e-004, 1.697318e-002, 2.001141e-002, 5.607562e-003, -2.555775e-003, -1.664147e-003, 5.979339e-004, -7.175052e-003, -5.443785e-003, 1.213414e-002, 1.583960e-002, 2.063084e-002, 1.674973e-002, 9.492654e-003, 1.684560e-002, 1.952611e-002, 6.449382e-003, -1.283701e-002, -2.183092e-002, -1.800266e-002, -1.209728e-002, -1.062310e-002, -1.375776e-002, -2.008668e-002, -1.724650e-002, -2.879604e-003, 1.026096e-002, 1.987966e-002, 1.502498e-002, 4.890824e-003, 8.661535e-003, 1.270156e-002, 1.083427e-002, -2.465752e-003, -1.061902e-002, -6.947163e-003, -5.143301e-003, -5.266165e-005, 3.651796e-003, -1.937014e-002, -2.055508e-002, -4.635991e-003, -1.142929e-002, -9.865448e-003, -6.583193e-003, -1.422274e-002, -7.612671e-003, 5.772965e-003, 9.943422e-003, 1.733507e-003, -9.768135e-004, -2.656440e-003, -6.840931e-004, -6.514103e-003, -8.477381e-003, 8.670642e-003, 9.428536e-003, 6.385726e-003, 7.835994e-003, 1.004524e-002, 1.452726e-002, 9.480644e-003, -6.572563e-003, -1.716689e-002, -1.812220e-002, -9.599698e-003, -4.524470e-003, -7.006887e-003, -1.932643e-002, -3.073511e-002, -3.389600e-002, -2.619835e-002, -1.029600e-002, 7.642139e-004, 3.070256e-003, 8.840079e-004, 5.661646e-003, 1.182811e-002, 7.469369e-003, -1.020135e-002, -1.721135e-002, -1.214668e-002, -1.206808e-002, -4.123210e-003, -2.683071e-003, -2.447710e-002, -2.263661e-002, -1.546160e-004, -5.352967e-003, -6.865706e-003, -6.654662e-003, -1.575912e-002, -1.377691e-002, -4.233434e-003, -1.314239e-003, -6.481435e-003, -6.801032e-003, -1.154900e-002, -5.845953e-004, -2.262800e-003, -3.197533e-003, 3.245283e-003, 8.326680e-003, -2.105923e-003, 5.200568e-004, 3.953255e-003, 8.148029e-005, -1.056679e-003, -7.915350e-003, -1.584607e-002, -1.302267e-002, -2.655194e-003, 6.850424e-003, 6.821039e-003, -4.553061e-003, -2.028751e-002, -3.051570e-002, -2.934588e-002, -2.183539e-002, -1.341389e-002, -1.027098e-002, -2.030206e-003, 7.701623e-003, 1.323340e-002, 2.164801e-003, -1.988087e-002, -1.690433e-002, -1.532535e-002, -1.944123e-002, -7.225746e-003, -1.060245e-002, -2.549681e-002, -1.686573e-002, 3.753013e-003, -3.584577e-003, 8.602999e-004, -3.517390e-003, -1.331941e-002, -1.470452e-002, -7.576863e-003, -9.869997e-003, -1.666331e-002, -1.953765e-002, -1.882074e-002, -7.554623e-004, 1.717901e-003, 4.617430e-003, 2.752623e-003, 4.667696e-003, -6.039642e-003, -9.395626e-003, -3.551264e-003, 2.273141e-003, 3.277937e-003, -1.422673e-006, -8.825281e-003, -9.686114e-003, -4.408748e-003, 3.451821e-003, 7.105751e-003, 1.110598e-003, -8.269309e-003, -1.775579e-002, -2.122280e-002, -2.137220e-002, -1.355674e-002, -9.597595e-003, 2.918861e-003, 1.270586e-002, 1.587837e-002, -2.476141e-003, -2.590668e-002, -1.834751e-003, -1.158182e-002, -1.889301e-002, -7.363230e-003, -2.773595e-003, -1.653345e-002, -3.379576e-003, 1.278028e-002, 6.108414e-004, 4.125405e-003, -3.075482e-003, -8.047940e-003, -1.514834e-002, -1.383102e-003, -7.917998e-003, -1.330600e-002, -1.569506e-002, -1.033783e-002, 5.399903e-003, 1.330450e-002, 9.706356e-003, 7.866392e-003, 7.085149e-003, -3.557817e-003, -1.380189e-002, -1.082614e-002, 4.981477e-003, 1.227802e-002, 1.460905e-002, 8.054034e-003, 2.582836e-003, 1.130426e-003, 3.500135e-003, 4.733840e-003, 2.529611e-003, 1.466994e-003, -1.897258e-003, -4.795623e-003, -7.540695e-003, -7.304939e-003, 8.681092e-005, 1.222763e-002, 2.530540e-002, 2.278804e-002, -6.633816e-003, -1.348653e-002, 1.564996e-002, -3.616203e-004, -5.648212e-003, 2.049335e-003, 7.852274e-003, -1.707618e-003, 9.110990e-003, 1.570233e-002, 2.726246e-003, 1.134128e-002, 7.990248e-003, 4.681638e-003, -4.352428e-003, 6.824000e-003, 7.227385e-003, 1.297691e-003, -8.236954e-003, -3.547058e-003, 2.249890e-003, 6.753398e-003, 1.162019e-004, 1.113864e-003,

© ISO/IEC 2004 — All rights reserved


Copyright International Organization for Standardization
Provided by IHS under license with ISO
No reproduction or networking permitted without license from IHS
Not for Resale

3.886742e-003, -2.131121e-003, -1.228131e-002, -1.520522e-002, -5.693596e-003, 9.118936e-003, 1.816101e-002, 1.946579e-002, 1.385004e-002, 1.000824e-002, 1.269057e-002, 1.318109e-002, 9.645296e-003, 9.333037e-003, 6.541116e-003, 2.723138e-003, -3.491587e-003, -4.372892e-003, 4.061788e-003, 1.447607e-002, 2.634146e-002, 1.167889e-002, -1.386314e-002, 8.939046e-003, 2.071215e-002, -3.827433e-003, -4.368679e-003, 5.423455e-003, 1.428313e-002, 5.371406e-003, 6.990320e-003, 8.468845e-003, -2.030127e-003, 1.650278e-002, 1.536885e-002, 1.039918e-002, 4.904272e-003, 1.052843e-002, 1.552424e-002, 4.225518e-003, -6.101052e-003, -4.292868e-003, -7.969991e-003, -3.104471e-003, -2.663565e-003, -1.632859e-003, 3.904114e-003, 3.895588e-003, -2.514048e-004, -8.088185e-003, -1.206676e-002, 1.942100e-003, 1.220932e-002, 2.141150e-002, 2.192083e-002, 2.410948e-002, 2.964384e-002, 2.919320e-002, 2.128703e-002, 1.225145e-002, 6.584323e-003, 1.849177e-003, -3.089133e-003, -2.091743e-004, 7.509266e-003, 1.465439e-002, 1.861097e-002, -5.991962e-003, -1.443725e-002, 2.133466e-002, 1.783607e-002, -4.705859e-003, -8.187700e-003, 7.175968e-003, 1.482919e-002, 4.507217e-003, 3.196316e-003, 1.914389e-003, -1.459105e-002, 8.512749e-003, 2.076778e-002, 1.705449e-002, 9.244655e-004, 1.327305e-004, 6.815471e-003, 2.402818e-003, 2.132331e-003, 2.989612e-003, -3.722857e-003, -1.724122e-003, 2.095946e-003, 2.954574e-003, 9.608989e-003, 7.216082e-003, 1.187629e-002, 8.216988e-003, -3.883768e-003, -5.933375e-004, 6.076584e-003, 1.285282e-002, 2.015114e-002, 2.635599e-002, 3.441469e-002, 3.582711e-002, 2.517478e-002, 1.073167e-002, 1.874703e-003, 1.570930e-003, 1.164183e-003, 9.247890e-003, 7.481061e-003, 8.195383e-003, -3.543270e-004, -1.681102e-002, -5.992436e-003, 2.774966e-002, 9.491099e-003, 1.806753e-003, -1.963124e-003, 5.124899e-003, 8.762761e-003, -4.762908e-004, 6.050766e-003, 6.969092e-003, -8.973565e-003, 1.058364e-002, -2.023095e-003, -1.364916e-002, -2.840003e-002, -2.378707e-002, -2.031499e-002, -1.210028e-002, -9.210426e-003, -8.752317e-003, -1.553870e-002, -1.694006e-002, -1.173398e-002, -1.298613e-002, -1.579972e-002, -2.159488e-002, -1.110460e-002, -8.426219e-003, -1.521781e-002, -1.577280e-002, -1.687527e-002, -1.731313e-002, -1.288463e-002, -2.729458e-003, 7.479127e-003, 1.107220e-002, 7.586494e-003, -1.059344e-003, -5.895741e-003, 8.562234e-004, 9.516327e-003, 1.502107e-002, 7.686149e-003, -4.914572e-003, -1.891675e-002, -1.801279e-002, -1.181596e-003, 1.228193e-002, -1.652346e-003, 9.358302e-003, 1.534141e-002, 1.262839e-003, -8.185158e-003, -1.007783e-002, -1.401965e-003, 1.701904e-002, 1.494753e-003, 1.630449e-002, -1.510564e-002, -1.328463e-002, -1.133289e-002, 5.965896e-003, 1.128465e-002, 1.033633e-002, 7.021222e-003, 6.921383e-003, -7.568357e-003, 2.478817e-003, 6.423930e-003, 9.117440e-004, -1.000338e-002, -1.377056e-002, -3.682009e-003, 6.969325e-003, 2.514652e-003, 4.007922e-003, 4.274273e-003, 3.696327e-003, 1.208263e-003, 4.161738e-003, 1.224380e-002, 1.791047e-002, 1.488092e-002, 7.075831e-003, 2.066322e-003, 3.512174e-003, 5.340361e-003, 9.982618e-003, 2.429181e-003, -1.366729e-002, -2.681042e-002, -1.191983e-002, -4.496511e-003, -1.193200e-002, -1.740460e-002, 1.146849e-002, 1.681053e-002, -1.217496e-003, -1.846008e-002, -1.943654e-002, -1.302522e-002, -1.172104e-003, -1.713752e-002, -1.954843e-003, -1.253801e-002, 6.888820e-003, 1.514432e-002, 9.139887e-003, 4.266132e-003, 2.510975e-003, 3.747032e-003, 6.779591e-003, 5.939065e-004, -2.501922e-003, -5.792592e-003, -4.681864e-003, -4.561302e-003, -1.176456e-002, -5.605148e-003, 9.352767e-003, 1.044764e-002, 7.473923e-003, 7.075410e-003, 1.051760e-002, 1.134049e-002, 1.584678e-002, 1.858843e-002, 1.850683e-002, 1.123757e-002, 4.011983e-003, 1.079159e-003, 7.136721e-004, 6.338896e-003, 8.516667e-003, 2.667706e-003, -5.406098e-003, -8.276862e-003, 2.307874e-003, -3.469624e-003, -2.111112e-002, -2.534145e-002, 7.909950e-003, 1.014273e-002, -1.336675e-003, -1.452451e-002, -1.111770e-002, -2.743073e-003, -1.305586e-002, -2.345884e-002, -5.024756e-003, 5.867342e-003, 1.565260e-002, 1.340796e-002, -2.646940e-003, -1.113110e-002, -1.309756e-003, 9.307947e-003, 2.076169e-002, 9.140962e-003, -8.018362e-003, -1.398312e-002, 3.942563e-003, 1.038032e-002, -3.104601e-003, -5.324526e-003, 9.416967e-003, 1.491469e-002, 1.326320e-002, 9.219742e-003, 6.242982e-003, 6.053611e-003, 1.163518e-002, 1.163944e-002, 5.637192e-003, -3.018597e-004, -4.824146e-003, -7.764941e-003, -2.620246e-003, 4.163029e-003, 4.813243e-003, 1.025090e-003, -2.564321e-003, 7.291366e-005, 1.065468e-002, -2.745744e-003, -2.076425e-002, -1.944055e-002, 4.618551e-003, -1.674724e-003, -1.388507e-002, -1.326608e-002, -3.138920e-003, 7.825303e-003, 1.471227e-003, -1.055181e-002, -9.473702e-005, 5.036189e-003, 6.879873e-004, -1.395626e-003, -1.387865e-002, -1.432683e-002, -4.151151e-003, 2.342489e-003, 1.845318e-002, 9.761420e-003, -1.373004e-002, -2.041870e-002, 1.037883e-002, 2.228451e-002, -3.800910e-003, -1.210117e-002, 9.222007e-004, 1.333117e-002, 1.618863e-002, 9.634959e-003, 3.896448e-003, 2.217418e-003, -3.203806e-004, -2.428644e-003, -8.841927e-003, -1.270447e-002, -1.473756e-002, -1.368038e-002, -5.505666e-003, 4.122769e-003, 1.018697e-002, 4.140439e-003, 3.033600e-003, 4.219100e-003, 1.756494e-002, 8.439398e-003, -4.082719e-003, -2.608419e-003, 1.607302e-003, -6.707392e-003, -1.157156e-002, -3.668464e-004, 6.701752e-003, 1.250711e-002, 6.657405e-003, 1.181853e-003, 1.832301e-002, -7.478120e-004, -3.638790e-003, -5.607262e-004, 5.285824e-003, -4.573332e-003, -1.415268e-002, -8.043356e-003, 1.936304e-002, 2.315175e-002, 1.666588e-005, -1.304687e-002, 1.129065e-002, 2.171670e-002, -1.191221e-003, -1.807529e-002, -1.202901e-002, 5.071298e-004, 1.319554e-002, 1.585029e-002, 1.576998e-002, 1.257028e-002, 6.259451e-003, 5.065117e-003, 1.919676e-003, 1.307105e-003, 2.380381e-004, 3.165645e-003, 1.004886e-002,


© ISO/IEC 2004 — All rights reserved

Copyright International Organization for Standardization
Provided by IHS under license with ISO
No reproduction or networking permitted without license from IHS
Not for Resale

1.884173e-002, 1.705057e-002, 5.442575e-003, 8.403297e-003, 1.628307e-002, 2.288375e-002, 1.706770e-002, 2.075713e-002, 1.623568e-002, 1.125199e-002, -2.272503e-003, 5.012021e-003, 2.185430e-002, 2.235444e-002, 8.925662e-003, -8.652581e-003, -5.652273e-003, 1.336030e-002, -5.888454e-003, -2.595923e-004, 1.235034e-002, 1.643531e-002, -4.949700e-003, -2.863988e-002, -1.765569e-002, 7.778562e-003, 2.070242e-002, 3.449650e-003, -1.427386e-002, 2.267501e-003, 1.468862e-002, -3.995045e-003, -2.174343e-002, -1.871442e-002, -6.783592e-003, 4.717685e-003, 1.288121e-002, 1.626155e-002, 1.618012e-002, 1.606131e-002, 1.459854e-002, 1.178278e-002, 1.216595e-002, 1.374709e-002, 1.739766e-002, 1.929107e-002, 1.628203e-002, 1.014907e-002, 3.269866e-003, 7.258820e-003, 1.108272e-002, -3.396200e-003, -1.043617e-003, 8.604778e-003, -4.278871e-004, -9.350161e-003, -2.614890e-002, -1.689431e-002, 8.929626e-003, 1.650560e-002, 2.200312e-003, -1.214058e-002, -9.513227e-003, 7.523431e-003},
{1.077477e-002, 1.472770e-002, -5.530788e-003, -8.187356e-003, -4.769834e-003, -5.432626e-004, 4.686274e-003, -1.766621e-004, 7.347731e-003, 1.649789e-002, 1.206575e-002, 4.971972e-003, 2.881108e-003, 6.476056e-003, 1.071637e-002, 6.415539e-003, 1.371160e-003, -2.816068e-003, -8.590437e-003, -1.439260e-002, -1.533586e-002, -1.231643e-002, -9.574739e-003, -6.340861e-003, -4.679941e-003, -1.075205e-003, 4.195384e-004, 9.905146e-004, 2.069342e-003, 5.578335e-003, 1.016407e-002, 1.659040e-002, 1.452768e-002, 9.411487e-004, -4.671209e-004, 8.088767e-003, 8.535783e-003, 1.843550e-003, -1.231925e-002, -8.566543e-003, 2.965636e-003, 8.863855e-003, 1.057521e-002, 2.498225e-003, 1.450204e-002, 2.519655e-002, 2.103580e-003, 1.166812e-002, -1.133900e-002, -1.125436e-002, -8.371465e-003, -8.240942e-003, -7.420908e-003, -4.634502e-003, 9.984393e-003, 6.195340e-003, -3.652221e-003, -6.363388e-003, 3.064643e-003, 1.239971e-002, 1.320117e-002, 6.325134e-003, 6.254342e-004, -3.929348e-003, -2.926682e-003, -4.462987e-003, -7.047652e-003, -6.158776e-003, -3.218639e-003, 3.403288e-004, -1.265403e-003, -2.189160e-003, -5.235252e-004, 1.212471e-003, 1.531008e-003, 1.665294e-003, -3.880375e-004, 3.723539e-003, 1.117371e-002, 6.512831e-003, -5.028673e-003, -7.526034e-003, 1.049508e-003, 4.501006e-003, -1.758300e-003, -5.808688e-003, 3.142426e-003, 7.495344e-003, 2.386856e-003, 1.291840e-003, 3.933839e-003, 1.731482e-002, 1.890212e-003, 1.314706e-002, -9.858055e-003, -2.339923e-003, -2.223703e-003, -9.660488e-003, -9.513155e-003, 1.266061e-004, 9.112451e-003, -7.649355e-003, -8.875149e-003, 2.208952e-004, 7.986564e-003, 1.000191e-002, 4.864492e-003, 6.201420e-004, 7.891717e-003, 9.892615e-003, 5.418321e-003, 1.954809e-003, -5.602682e-003, -8.858015e-003, -1.051308e-002, -1.270220e-002, -1.429193e-002, -1.258187e-002, -8.816380e-003, -3.699363e-003, 2.533900e-003, 5.480638e-003, 2.733768e-003, -3.018262e-003, -5.024488e-003, 1.700072e-003, 6.523258e-003, -1.472428e-003, -8.415848e-003, 5.936447e-003, 1.392959e-002, 2.888930e-004, -1.031973e-002, 3.273486e-003, 2.420667e-003, -1.017644e-002, -1.044967e-002, 1.782296e-003, 1.442540e-003, 1.588040e-002, -4.766553e-003, 1.040388e-003, -2.025967e-003, -5.829885e-003, 5.403904e-005, 9.187198e-003, 3.848072e-003, -2.948028e-003, 6.386248e-003, 1.112456e-002, 6.178597e-003, 1.981217e-003, 7.242222e-003, 1.704567e-002, 2.262698e-002, 2.141650e-002, 1.464267e-002, 7.263905e-003, 1.329312e-003, -8.529308e-003, -1.546004e-002, -2.601064e-002, -3.005565e-002, -2.648883e-002, -1.699186e-002, -8.954271e-003, 2.268084e-003, 1.090281e-002, 1.541567e-002, 9.762339e-003, -4.101083e-003, -7.829278e-003, 4.382428e-003, 1.416947e-002, -3.454585e-004, -4.480850e-003, 2.028939e-002, 2.136537e-002, -5.916701e-003, -5.194722e-003, 4.480678e-003, -6.400337e-003, -1.544464e-002, -1.166316e-002, -2.053972e-002, -1.706639e-004, -2.153871e-002, -1.497716e-002, -1.682491e-002, -1.439387e-002, -3.055071e-003, -1.429616e-003, -2.904650e-003, -3.982906e-003, 4.141890e-003, -1.273825e-004, -5.661107e-003, 3.791020e-003, 1.753679e-002, 2.221224e-002, 2.361822e-002, 2.279818e-002, 2.370585e-002, 2.241940e-002, 1.198000e-002, -3.596921e-003, -1.756445e-002, -3.356248e-002, -4.087067e-002, -3.658615e-002, -2.548866e-002, -1.535248e-002, 1.133585e-003, 1.306007e-002, 1.957446e-002, 1.737117e-002, 5.041972e-003, -6.119743e-003, -1.070804e-002, 4.162837e-003, 1.128011e-002, -7.576450e-003, -7.008952e-003, 1.371077e-002, -4.059300e-003, -2.798946e-002, -2.807070e-003, 2.473393e-003, -1.224062e-002, -1.717940e-002, -1.716878e-002, 4.239282e-003, -1.301503e-002, -6.905900e-003, -1.477782e-002, -6.620340e-003, -3.291481e-003, -3.238548e-003, -7.125868e-003, -4.286120e-003, -6.495497e-003, -1.503439e-002, -6.205964e-003, 1.261616e-002, 2.312129e-002, 2.425851e-002, 2.735989e-002, 3.212318e-002, 3.757352e-002, 3.827909e-002, 2.336805e-002, 1.123908e-003, -2.324963e-002, -4.605267e-002, -5.612078e-002, -5.022867e-002, -3.599882e-002, -2.132595e-002, -5.575042e-003, 6.648554e-003, 1.221744e-002, 1.515391e-002, 1.202449e-002, 3.823913e-003, -6.149031e-003, -4.251514e-003, 1.390618e-002, 9.754796e-003, -1.036414e-002, -1.088733e-004, 1.175053e-002, -6.939675e-003, -9.329805e-003, 4.213580e-003, -2.522083e-003, -1.388235e-002, -1.799635e-002, 7.343338e-003, -7.277063e-003, 1.219325e-003, -9.052799e-003, -8.592351e-003, -3.101442e-003, -3.185825e-003, -3.267851e-003, -5.402534e-003, -1.331416e-002, -1.635777e-002, -1.882183e-003, 1.586230e-002, 2.442406e-002, 2.867307e-002, 3.425022e-002, 4.714937e-002, 5.192329e-002, 4.362863e-002, 2.940195e-002, 6.610828e-003, -2.295613e-002, -4.759004e-002, -5.508544e-002, -4.909031e-002, -3.839727e-002, -2.702683e-002, -1.386708e-002, -3.470902e-005, 9.401161e-003, 1.087877e-002, 1.295873e-002, 8.228752e-003, 4.137467e-005, -6.300779e-003, 2.864172e-003, 1.449567e-002, -1.368779e-003, -1.023543e-002, 7.102977e-003, 4.984979e-003, -2.143270e-002, -3.918360e-003,

© ISO/IEC 2004 — All rights reserved


Copyright International Organization for Standardization
Provided by IHS under license with ISO
No reproduction or networking permitted without license from IHS
Not for Resale

7.487541e-003, -6.643541e-003, -1.816608e-002, 1.454515e-002, 8.157360e-004, 6.311349e-003, -1.155337e-002, -1.253219e-002, 4.194934e-004, 1.259008e-003, -9.927268e-004, -4.647483e-003, -1.489449e-002, -1.285342e-002, -1.718387e-004, 9.708485e-003, 1.451130e-002, 2.008320e-002, 2.565103e-002, 3.636531e-002, 3.816957e-002, 3.333139e-002, 2.605122e-002, 5.570247e-003, -1.894256e-002, -4.072938e-002, -4.650769e-002, -4.279898e-002, -3.676325e-002, -2.807039e-002, -2.059493e-002, -8.767973e-003, 1.148061e-003, 7.157315e-003, 8.225853e-003, 4.980732e-003, 3.518438e-004, -3.665230e-003, -1.651683e-003, 8.277071e-003, 9.913432e-003, -1.069239e-002, -9.647423e-003, 9.106290e-003, -7.783894e-003, -7.091480e-003, 1.168045e-002, 3.287370e-003, -1.131872e-002, 1.911542e-002, 3.600139e-003, 5.354618e-003, -1.124822e-002, -6.836650e-003, 1.100212e-003, 5.057170e-003, 4.879350e-003, -3.704469e-003, -1.215481e-002, -7.808056e-003, -2.167096e-003, -1.855529e-003, -3.740356e-003, 1.743785e-003, 1.003319e-002, 2.545793e-002, 3.422763e-002, 3.297908e-002, 2.387442e-002, 3.799003e-003, -1.797796e-002, -3.322107e-002, -3.721346e-002, -3.509810e-002, -3.154261e-002, -2.269797e-002, -2.014719e-002, -1.100401e-002, -5.797343e-003, 1.596715e-003, 2.515920e-003, 1.200989e-003, -2.610136e-003, -3.897185e-003, -2.099587e-003, 1.922862e-003, 1.144007e-002, -2.894065e-004, -1.646749e-002, 2.173579e-003, -4.063777e-003, -6.501561e-003, 1.276360e-002, 7.778643e-003, -6.191091e-003, 1.624908e-002, -2.029042e-003, 5.228260e-003, -7.664827e-003, -3.463472e-003, 2.283210e-003, 7.012199e-003, 1.062200e-002, 3.092677e-003, -4.321745e-003, -2.564657e-003, -5.525278e-003, -1.353897e-002, -1.100401e-002, 5.179487e-004, 1.570631e-002, 3.078100e-002, 3.684815e-002, 3.373962e-002, 2.086992e-002, 3.777912e-004, -1.668194e-002, -2.961808e-002, -3.465302e-002, -3.308455e-002, -2.638236e-002, -1.933925e-002, -1.250666e-002, -7.779115e-003, -4.052689e-003, 5.106579e-005, 2.739981e-003, 2.299836e-003, -1.346829e-003, -7.807569e-003, -1.017284e-003, -8.144945e-004, 1.529077e-003, -3.654449e-003, -1.047679e-002, -4.453919e-005, -1.764826e-003, -7.853082e-003, 8.239235e-003, 8.872941e-003, -7.411007e-003, -1.246888e-002, -7.555640e-005, 1.388761e-002, -4.746254e-003, 1.656071e-003, -4.189775e-005, 3.794400e-003, 1.376060e-002, 1.059121e-002, 1.798430e-003, 7.259361e-004, -5.320387e-003, -5.072485e-003, 2.030293e-003, 1.639918e-002, 3.097795e-002, 4.098496e-002, 3.970489e-002, 3.042242e-002, 1.578627e-002, -5.054855e-003, -2.140615e-002, -3.260910e-002, -3.753837e-002, -3.596436e-002, -3.110512e-002, -2.329603e-002, -1.328539e-002, -3.733955e-003, 4.809054e-003, 1.077317e-002, 1.033373e-002, 7.844665e-003, 4.587633e-003, 5.008994e-004, -3.236232e-003, 1.419221e-003, 4.064451e-003, -1.030051e-002, -6.633405e-003, 1.601011e-003, -3.666642e-003, -3.849618e-003, 2.710550e-004, 7.903498e-003, -1.201479e-002, -1.862595e-002, 4.934390e-003, 1.576506e-002, -5.286071e-003, 7.435814e-003, 1.091669e-003, -1.480905e-003, 1.053189e-002, 9.301144e-003, 5.570258e-003, 4.987493e-003, 2.846385e-003, 8.366065e-003, 2.344457e-002, 3.855622e-002, 4.713022e-002, 4.849618e-002, 4.057707e-002, 2.700001e-002, 5.546896e-003, -1.281682e-002, -2.617674e-002, -3.503186e-002, -3.846510e-002, -4.100741e-002, -3.951323e-002, -3.130128e-002, -1.964919e-002, -3.004984e-003, 1.031957e-002, 2.106920e-002, 2.293912e-002, 2.022115e-002, 1.503340e-002, 9.421974e-003, 4.527842e-003, 6.932060e-003, 6.643575e-003, -1.057412e-002, -1.100859e-002, 8.831328e-003, -3.660098e-004, -2.401375e-005, -5.330569e-003, 3.791856e-003, -1.180539e-002, -2.096966e-002, 1.292797e-002, 6.340521e-003, -1.264708e-003, 1.035252e-002, -4.553447e-003, -5.145475e-003, 2.089489e-003, 2.119810e-003, 3.592881e-003, 3.990374e-003, 1.092179e-002, 2.341761e-002, 4.108727e-002, 5.426190e-002, 6.056227e-002, 5.878957e-002, 4.466598e-002, 2.674822e-002, 5.322794e-003, -1.187143e-002, -2.592995e-002, -3.499134e-002, -4.076372e-002, -4.466806e-002, -4.483320e-002, -3.728436e-002, -2.428605e-002, -5.998969e-003, 9.693581e-003, 2.183889e-002, 3.015078e-002, 3.414355e-002, 3.021262e-002, 1.708818e-002, 1.137252e-002, 1.438729e-002, 1.347677e-002, -5.556044e-003, -1.623955e-002, 1.215426e-002, 3.598505e-003, -8.393877e-004, -7.008534e-003, -2.634528e-003, -9.240251e-003, -1.690973e-002, 1.511289e-002, 1.757740e-003, -6.021651e-003, 7.348354e-003, -8.695123e-003, -6.955261e-003, -7.544432e-003, -1.229816e-003, -5.129115e-003, 1.883903e-004, 1.393710e-002, 3.315692e-002, 5.291687e-002, 6.225610e-002, 6.997555e-002, 6.486541e-002, 4.699735e-002, 2.878480e-002, 9.379480e-003, -6.476630e-003, -1.592455e-002, -2.655641e-002, -3.339702e-002, -3.958947e-002, -4.119988e-002, -3.655880e-002, -2.485656e-002, -9.602008e-003, 9.016450e-003, 2.309739e-002, 3.625658e-002, 4.242304e-002, 3.921716e-002, 1.850798e-002, 6.759205e-003, 1.580380e-002, 2.085445e-002, -4.430359e-003, -1.817996e-002, 8.428560e-003, 4.622856e-003, -5.845830e-004, -4.253323e-003, -1.387286e-002, -2.442472e-003, -6.552673e-003, 1.311966e-002, -8.647820e-004, -6.941080e-003, 2.281705e-003, -1.594085e-002, -8.866619e-003, -1.365319e-002, -1.368809e-002, -1.630716e-002, -6.948517e-003, 1.609696e-002, 4.155225e-002, 5.617674e-002, 6.250494e-002, 6.515109e-002, 5.704443e-002, 4.198470e-002, 2.451293e-002, 9.181584e-003, -1.678295e-003, -8.077833e-003, -1.441459e-002, -1.939717e-002, -2.598896e-002, -3.027570e-002, -2.973033e-002, -2.301944e-002, -1.204140e-002, 4.448239e-003, 1.843075e-002, 3.066158e-002, 3.733083e-002, 3.679320e-002, 2.121150e-002, 2.482623e-003, 8.459462e-003, 1.884055e-002, -3.854653e-004, -1.519034e-002, 3.825348e-003, -1.679154e-003, -4.836455e-003, -1.562703e-003, -1.767831e-002, 9.989986e-003, -3.025692e-003, 1.111845e-002, -1.362728e-003, -1.090828e-002, -2.138812e-003, -1.713584e-002, -9.109726e-003, -1.504521e-002, -2.493272e-002, -2.197336e-002, -8.993766e-003, 1.510426e-002, 3.681818e-002,


© ISO/IEC 2004 — All rights reserved

Copyright International Organization for Standardization
Provided by IHS under license with ISO
No reproduction or networking permitted without license from IHS
Not for Resale

4.186016e-002, 4.214678e-002, 3.736589e-002, 2.904923e-002, 2.035155e-002, 8.609692e-003, 9.890343e-004, -5.126405e-004, -2.342808e-003, -3.066525e-003, -8.847343e-003, -1.671158e-002, -2.527128e-002, -2.915899e-002, -3.073652e-002, -2.650213e-002, -1.600661e-002, -2.874616e-003, 1.076158e-002, 1.691517e-002, 1.779608e-002, 1.113346e-002, -4.691349e-003, -1.196477e-003, 1.497245e-002, 6.408837e-003, -4.769813e-003, 1.059407e-003, -7.265967e-003, -1.271835e-003, 7.825011e-003, -2.063075e-002, 2.233275e-002, 6.649329e-004, 9.198185e-003, -1.710303e-003, -9.683810e-003, -1.883753e-003, -1.863704e-002, -1.023217e-002, -1.422826e-002, -2.681382e-002, -2.122340e-002, -8.801030e-003, 1.002397e-002, 2.361205e-002, 2.376619e-002, 1.460846e-002, 2.791883e-003, -4.789603e-003, -9.421602e-003, -1.045710e-002, -6.551650e-003, 1.046731e-003, 5.567973e-003, 7.514114e-003, 1.366054e-003, -1.021273e-002, -2.527499e-002, -3.558123e-002, -4.536566e-002, -4.466711e-002, -3.562863e-002, -2.087415e-002, -7.757780e-003, 1.478488e-003, 3.549272e-003, -2.683579e-003, -1.656385e-002, -9.705062e-003, 6.733704e-003, 5.388458e-003, 3.123000e-003, -5.359552e-004, -1.099082e-002, -3.521716e-003, 1.486958e-002, -2.255842e-002, 2.925764e-002, 5.001922e-003, 9.093900e-003, -2.576592e-004, -4.086665e-003, -5.035670e-004, -1.616082e-002, -6.788938e-003, -1.485724e-002, -2.597130e-002, -2.012405e-002, -9.759626e-003, 4.268914e-003, 1.293088e-002, 1.160209e-002, 1.309102e-003, -1.078297e-002, -2.229429e-002, -2.587817e-002, -2.276513e-002, -9.473016e-003, 7.348652e-003, 1.654087e-002, 2.186159e-002, 1.493597e-002, -3.232806e-003, -2.364928e-002, -3.814550e-002, -4.057141e-002, -3.477290e-002, -2.031814e-002, -4.438527e-003, 8.365739e-003, 1.341517e-002, 1.004427e-002, -2.800368e-003, -2.148161e-002, -1.681143e-002, -4.358748e-004, 2.895814e-003, 2.766551e-003, -7.556350e-004, -1.765334e-002, -6.801826e-003, 1.687217e-002, -1.562650e-002, 3.199486e-002, 5.253111e-003, 5.772637e-003, 2.983611e-004, -1.763555e-003, 2.165462e-003, -1.074522e-002, -1.775547e-003, -1.623727e-002, -1.948836e-002, -1.309735e-002, -1.615647e-002, -1.680460e-002, -1.353019e-002, -9.626801e-003, -7.593935e-003, -9.753876e-003, -1.420729e-002, -1.978817e-002, -1.718129e-002, -5.762322e-003, 1.305718e-002, 2.672011e-002, 3.230264e-002, 2.367487e-002, 8.610247e-004, -2.018064e-002, -2.830679e-002, -2.172767e-002, -5.471910e-003, 1.197729e-002, 2.119422e-002, 2.365410e-002, 2.155989e-002, 2.029257e-002, 7.144969e-003, -2.176537e-002, -2.376354e-002, -6.252505e-003, 2.161397e-003, 3.565985e-003, -2.919797e-004, -1.892220e-002, -9.044528e-003, 1.507712e-002, -1.300572e-002, 2.235535e-002, 5.759163e-004, 1.586008e-003, -3.306516e-003, -2.012323e-003, 5.442187e-003, -5.876686e-003, 3.581152e-003, -1.170053e-002, -4.810987e-003, -1.529945e-002, -4.558753e-002, -6.319062e-002, -6.288722e-002, -5.098630e-002, -3.258263e-002, -1.500999e-002, -7.786992e-003, -5.965223e-003, -1.006230e-002, -1.450224e-003, 1.776519e-002, 3.443640e-002, 4.161745e-002, 3.406619e-002, 7.143839e-003, -1.434504e-002, -2.609434e-002, -3.131615e-002, -2.858294e-002, -2.063484e-002, -1.543903e-002, -1.645069e-002, -2.418573e-002, -1.817407e-002, -5.456963e-003, -1.973070e-002, -2.333245e-002, -5.688585e-003, 2.501250e-003, 1.624100e-003, 2.620372e-003, -1.806171e-002, -1.586525e-002, 9.484186e-003, -1.542907e-002, 1.161223e-002, -7.868738e-003, -8.353252e-003, -6.343085e-003, -8.077837e-003, 7.310169e-003, 1.151560e-003, 4.572834e-003, -2.059050e-003, 6.172073e-003, -5.681957e-003, -4.530379e-002, -6.229713e-002, -5.007151e-002, -3.178683e-002, -1.057022e-002, -4.111218e-003, -1.000559e-002, -2.088493e-002, -3.167805e-002, -3.020949e-002, 2.279829e-003, 3.122891e-002, 4.647892e-002, 4.544857e-002, 1.015762e-002, -1.993292e-002, -2.757207e-002, -2.513349e-002, -1.557855e-002, -5.667684e-003, -4.911178e-003, -1.483102e-002, -3.426788e-002, -5.169765e-002, -4.417005e-002, -3.038723e-002, -2.438792e-002, -5.801489e-003, -4.557288e-003, -5.198857e-003, 5.094484e-003, -1.443518e-002, -1.905240e-002, 7.969073e-003, -9.356665e-003, -1.555655e-002, -1.648539e-002, -1.259543e-002, -1.216213e-002, -1.707089e-002, 6.076009e-003, 5.179705e-003, 3.906967e-003, 3.798890e-004, 1.874987e-002, 1.061908e-002, -3.616049e-002, -6.722666e-002, -6.397931e-002, -5.299829e-002, -4.418199e-002, -4.059048e-002, -4.492552e-002, -5.811527e-002, -8.254823e-002, -8.690184e-002, -3.652898e-002, 8.059004e-003, 3.472619e-002, 3.080558e-002, -7.580625e-003, -4.052159e-002, -5.158079e-002, -5.125326e-002, -3.464549e-002, -2.403417e-002, -2.540824e-002, -2.885388e-002, -3.546396e-002, -4.620849e-002, -4.030109e-002, -3.227894e-002, -2.781700e-002, -7.213205e-003, -8.748449e-003, -1.506248e-002, 8.162465e-003, -4.058719e-003, -1.483813e-002, 9.595818e-003, -2.200445e-003, -2.032893e-002, -1.558568e-002, -1.333340e-002, -1.212828e-002, -2.250636e-002, -4.810517e-003, -3.113403e-003, 8.061505e-004, 4.944131e-003, 1.858572e-002, 1.314815e-002, -3.332953e-002, -5.925832e-002, -4.511862e-002, -2.074804e-002, -3.698938e-003, -1.061279e-003, -1.938522e-002, -5.432689e-002, -9.649707e-002, -1.203069e-001, -8.046515e-002, -3.582546e-002, -1.037332e-002, -2.489330e-003, -3.637014e-002, -7.128994e-002, -7.933087e-002, -6.475273e-002, -3.533058e-002, -1.242089e-002, -7.917478e-003, -2.072902e-002, -3.591770e-002, -3.917928e-002, -2.916920e-002, -2.235298e-002, -2.530657e-002, -9.717855e-003, -1.703363e-002, -2.486915e-002, 6.942369e-003, 2.432119e-003, -1.264261e-002, -3.932371e-003, 3.698537e-003, -1.692858e-002, -7.617665e-003, -1.129399e-002, -1.354227e-002, -1.932146e-002, -7.580659e-003, -2.984173e-003, 9.341433e-004, 4.614700e-003, 8.915000e-003, 1.146943e-002, -7.991325e-003, -2.754314e-002, -3.752096e-002, -3.036056e-002, -1.007310e-002, 1.315286e-002, 5.105337e-003, -2.844718e-002, -6.868675e-002, -1.013747e-001, -7.012883e-002, -4.266636e-002, -3.147857e-002, -2.851456e-002, -5.058438e-002, -6.957077e-002, -6.060119e-002, -4.824685e-002, -2.718631e-002,

© ISO/IEC 2004 — All rights reserved


Copyright International Organization for Standardization
Provided by IHS under license with ISO
No reproduction or networking permitted without license from IHS
Not for Resale

1.047588e-002, 1.548623e-002, -1.834175e-002, -2.865945e-002, -2.399412e-002, -1.412918e-002, -1.153835e-002, -2.405505e-002, -5.532763e-003, -2.037571e-002, -3.342693e-002, 2.146302e-004, 4.770241e-003, -1.136572e-002, -6.920775e-003, 8.045395e-004, -1.427517e-002, -3.170602e-003, 2.705027e-004, 8.145584e-003, -2.124502e-003, 5.825745e-003, 2.835318e-003, 8.117738e-003, -4.908393e-003, -4.358859e-003, 4.066846e-003, 6.907419e-003, -1.606353e-002, -4.745804e-002, -5.468037e-002, -4.259708e-002, -5.000894e-003, 3.503605e-002, 1.836008e-002, -3.664738e-002, -4.747095e-002, -3.454978e-002, -2.450613e-002, -2.093735e-002, -2.788876e-002, -3.962831e-002, -4.422205e-002, -2.549207e-002, 1.036352e-002, 7.685387e-003, 7.557884e-003, 1.468311e-002, -2.995118e-002, -2.965381e-002, -4.758018e-003, 7.752456e-004, 9.136133e-003, -1.758082e-002, -3.508792e-003, -1.619814e-002, -3.226191e-002, 3.226716e-003, 1.287987e-002, -3.964126e-003, -4.838803e-003, 3.001959e-003, -4.631299e-003, 3.469956e-004, 1.704579e-002, 2.628424e-002, 8.764177e-003, 1.421703e-002, -3.429759e-003, 2.520464e-003, -1.069917e-002, -1.337492e-002, 4.814270e-003, 2.133821e-003, -2.293618e-002, -4.525572e-002, -4.404802e-002, -3.067375e-002, -8.895504e-003, 1.258420e-002, 1.195014e-002, -1.435467e-002, -6.916809e-003, 1.263377e-003, -2.161331e-003, -2.315491e-004, -1.238509e-003, -1.189092e-002, -2.800397e-002, -1.409443e-002, 2.592439e-003, 1.225036e-002, 1.818058e-002, 1.572654e-002, -1.412721e-003, -1.731250e-002, -7.945056e-003, 5.295549e-003, 1.070831e-002, -1.330423e-002, -1.321462e-004, -3.299519e-003, -2.471254e-002, 8.059604e-003, 1.136499e-002, -2.565603e-003, 2.748252e-003, 1.869998e-003, 1.677432e-004, 3.267710e-003, 2.647680e-002, 3.026205e-002, 7.828576e-003, 1.399965e-002, -6.003836e-003, 4.955907e-004, -2.246350e-003, -4.264154e-003, 9.596821e-003, 2.863863e-003, -2.886207e-002, -6.483362e-002, -8.299506e-002, -8.190268e-002, -6.005571e-002, -3.882124e-002, -2.627810e-002, -1.566115e-002, 2.411509e-002, 2.576358e-002, 1.580491e-002, 1.182498e-002, 1.273972e-002, 5.505336e-003, -5.649567e-003, -2.361106e-002, -3.009290e-002, -3.236583e-002, -3.159233e-002, -3.025612e-002, -3.088309e-002, -2.949314e-002, -1.571992e-002, 9.810972e-004, 9.602984e-003, -8.741150e-003, 4.973312e-003, 4.713257e-003, -1.407932e-002, 6.829009e-003, 7.248286e-004, -3.726728e-003, 8.613755e-003, -2.501077e-004, 9.305469e-004, 1.056564e-003, 2.214437e-002, 1.991184e-002, -7.247017e-003, 4.698464e-003, -7.813551e-003, -1.462393e-003, 2.284987e-003, 4.385392e-003, 1.643045e-002, 1.191820e-002, -1.506850e-002, -4.868614e-002, -7.312080e-002, -7.497225e-002, -6.174855e-002, -4.637493e-002, -3.433602e-002, -8.725690e-004, 4.328205e-002, 3.198126e-002, 2.318854e-002, 1.792013e-002, 2.073196e-002, 1.654138e-002, 1.765450e-002, -4.604291e-003, -2.687832e-002, -3.817492e-002, -4.336531e-002, -4.192779e-002, -3.637792e-002, -2.834445e-002, -1.313062e-002, 3.783022e-003, 7.924544e-003, -4.316662e-003, 1.229489e-003, 4.201606e-003, -1.378179e-002, -7.223943e-004, 2.258790e-003, 1.712759e-003, 6.354355e-003, -3.914011e-003, -3.096772e-003, -1.065259e-002, 6.182236e-003, 1.134889e-003, -2.318425e-002, -9.204617e-003, -8.769065e-003, -1.395827e-003, 5.285057e-003, 6.587384e-003, 2.423694e-002, 2.423017e-002, 5.145154e-003, -1.495940e-002, -3.570420e-002, -4.043160e-002, -3.163717e-002, -2.309543e-002, -1.038562e-002, 2.654386e-002, 3.635854e-002, 3.028616e-002, 2.282430e-002, 1.319721e-002, 2.512124e-002, 2.048479e-002, 1.670057e-002, 2.310953e-002, 3.471544e-003, -1.332221e-002, -1.867888e-002, -1.700210e-002, -1.088172e-002, -4.467850e-003, 5.875794e-003, 1.623813e-002, 9.740823e-003, -8.325341e-004, -1.843880e-003, -3.376032e-004, -1.590763e-002, -3.849619e-003, 8.809873e-003, 2.396301e-003, -2.868428e-003, 9.762238e-003, -2.964731e-003, -2.533733e-002, -1.330088e-002, -9.766282e-003, -2.167244e-002, -1.298448e-002, -8.763686e-003, 1.368795e-004, 9.424701e-003, 4.430017e-003, 2.550919e-002, 3.364224e-002, 3.058962e-002, 2.056755e-002, 1.354226e-002, 1.137631e-002, 1.519292e-002, 1.493281e-002, 2.131064e-002, 2.726161e-002, 2.226185e-002, 1.828872e-002, 7.757213e-003, 1.513666e-003, 1.191674e-002, 1.546633e-002, 5.100351e-003, 1.994867e-002, 3.751834e-002, 3.316199e-002, 2.636336e-002, 2.643543e-002, 3.076546e-002, 2.926550e-002, 3.028786e-002, 2.561797e-002, 1.501636e-002, -1.650888e-003, -1.491782e-003, -4.557505e-004, -1.962115e-002, -6.561246e-003, 1.457209e-002, -1.404533e-003, -1.441531e-002, 1.051818e-002, 1.692138e-002, -2.562688e-002, -2.527287e-002, -9.802097e-003, -1.589635e-002, -7.619510e-003, -4.552180e-003, 2.139202e-003, 9.145399e-003, 3.026171e-003, 1.367806e-002, 2.605430e-002, 3.506979e-002, 3.861079e-002, 4.342670e-002, 4.536065e-002, 4.156901e-002, 2.372440e-002, 1.140861e-002, 6.061154e-003, 3.699715e-003, -7.984533e-003, -1.659534e-002, -1.619427e-002, -7.209283e-003, -4.023593e-003, -7.437225e-003, -6.601642e-004, 2.154826e-002, 4.585042e-002, 5.827198e-002, 6.101492e-002, 5.462404e-002, 4.334906e-002, 3.313793e-002, 2.350205e-002, 9.767231e-003, 7.079811e-004, 1.691104e-003, 5.090822e-003, -1.365489e-002, -4.799117e-003, 1.513812e-002, -1.504974e-004, -1.821389e-002, 6.984378e-003, 3.540243e-002, -1.242793e-002, -2.139667e-002, 1.950917e-003, -5.162564e-003, -3.542793e-003, -1.765205e-003, -1.309412e-003, 4.692055e-003, 2.541881e-003, 3.119247e-003, 9.073673e-003, 2.177051e-002, 2.769331e-002, 2.992115e-002, 2.821149e-002, 1.227103e-002, -6.627216e-003, -7.497828e-003, -6.441701e-003, -3.050879e-003, -2.429571e-002, -3.804996e-002, -2.834283e-002, -1.285712e-002, -1.711137e-002, -2.873601e-002, -1.764598e-002, 3.199736e-003, 2.164277e-002, 3.876206e-002, 4.801123e-002, 4.692312e-002, 3.565505e-002, 2.593969e-002, 1.730741e-002, 1.218155e-002, 2.680621e-003, 3.669087e-003, 7.128779e-003, -3.807691e-003, 3.832964e-003, 1.160956e-002, 7.452407e-004, -1.855964e-002, 2.172923e-002,


© ISO/IEC 2004 — All rights reserved
--`,,```,,,,````-`-`,,`,,`,`,,`---

Copyright International Organization for Standardization
Provided by IHS under license with ISO
No reproduction or networking permitted without license from IHS
Not for Resale

4.093699e-002, 6.914298e-003, -7.138359e-003, 1.177040e-002, 3.661538e-003, 1.478166e-003, -3.429476e-004, -5.305594e-005, 1.645537e-003, -2.453723e-003, -6.638339e-003, -5.572884e-003, 3.485490e-003, 7.508468e-003, 5.176800e-003, -4.926534e-004, -8.971504e-003, -1.154767e-002, -6.208420e-003, 3.490512e-003, 1.115657e-002, -3.021852e-002, -6.643679e-002, -4.313222e-002, 2.348819e-004, 9.797590e-003, -1.720472e-002, -1.386946e-002, 6.016138e-003, 1.073624e-002, 1.895955e-002, 2.811020e-002, 2.727232e-002, 1.845604e-002, 1.458693e-002, 9.002514e-003, 1.139916e-002, 5.426814e-003, 3.470954e-003, 9.994095e-003, 1.868348e-003, 8.627524e-003, 1.177793e-002, -2.510775e-003, -1.303655e-002, 2.479244e-002, 3.465434e-002, 1.304417e-002, -1.037211e-003, 1.420427e-002, 6.468048e-003, 2.982572e-003, 2.475465e-003, -2.277164e-003, 1.249795e-003, -5.778395e-003, -1.682165e-002, -2.016316e-002, -1.385738e-002, -7.263791e-003, -1.108067e-002, -1.493946e-002, -1.260013e-002, -3.120252e-003, -9.194892e-004, 4.327857e-003, -1.432352e-002, -5.530851e-002, -7.899088e-002, -6.323437e-002, -1.980566e-002, 7.616826e-003, 3.149322e-003, 4.504104e-003, 1.829980e-002, 1.287515e-002, 6.026680e-003, 4.162447e-003, 2.998689e-003, 9.871678e-005, 1.974896e-003, 4.341131e-003, 1.105201e-002, 6.498718e-003, 5.309517e-003, 1.374705e-002, -1.062833e-003, 8.775968e-003, 4.559588e-003, -1.204911e-002, -1.441377e-002, 2.490680e-002, 2.100393e-002, 7.002691e-003, 3.327157e-003, 1.444943e-002, 9.314473e-005, 1.723066e-003, 6.115649e-003, -8.452330e-004, 4.170205e-003, -3.595455e-003, -2.092186e-002, -3.374524e-002, -3.305228e-002, -2.252201e-002, -2.232377e-002, -1.825085e-002, -2.239501e-004, 1.498756e-002, 1.838362e-002, 6.534083e-003, -1.538851e-002, -3.681645e-002, -4.977421e-002, -4.186496e-002, -1.339394e-002, 1.677620e-002, 2.079505e-002, 2.208689e-002, 2.588411e-002, 2.103122e-002, 4.905689e-003, -7.798681e-003, -1.487356e-002, -1.579930e-002, -8.335469e-003, 3.111857e-004, 8.824386e-003, 2.331534e-003, 9.819104e-003, 1.486394e-002, 8.887568e-004, 4.687462e-003, -5.276446e-003, -2.054141e-002, -1.130225e-002, 1.519826e-002, 7.378605e-003, -7.404305e-003, 1.224727e-003, 1.419008e-002, -1.400692e-003, -9.537267e-003, -5.179629e-004, -7.256928e-003, 1.390455e-003, -3.698078e-004, -1.620346e-002, -3.738792e-002, -4.151534e-002, -2.925779e-002, -2.285054e-002, -6.512573e-003, 2.127460e-002, 3.712244e-002, 4.471770e-002, 3.740768e-002, 2.327483e-002, 4.708892e-003, 3.020733e-003, 9.650435e-003, 1.768349e-002, 4.507889e-002, 4.977950e-002, 4.041151e-002, 2.856296e-002, 1.813284e-002, 5.382353e-003, -1.205872e-002, -2.318405e-002, -2.370211e-002, -1.405888e-002, -3.625950e-003, 4.066944e-003, 1.055387e-003, 1.058189e-002, 8.526405e-003, 6.770577e-003, 4.944345e-003, -5.527946e-003, -1.519605e-002, -4.325103e-004, 3.550330e-003, -7.576252e-003, -2.545823e-002, -1.128732e-002, 8.652935e-003, 2.237390e-003, -1.065401e-002, 1.105037e-003, -6.561388e-003, 7.996204e-004, 3.787581e-003, -9.032277e-003, -3.235149e-002, -4.477015e-002, -2.971682e-002, -1.138151e-002, 1.712064e-002, 3.965303e-002, 5.056406e-002, 5.329568e-002, 4.518129e-002, 2.492014e-002, 2.014621e-003, 4.825690e-004, 7.198271e-003, 1.420175e-002, 3.609969e-002, 4.966259e-002, 4.367184e-002, 3.553738e-002, 2.234782e-002, 6.779215e-003, -1.041055e-002, -2.412155e-002, -2.400493e-002, -1.488482e-002, -4.194582e-003, 7.946551e-004, -5.157190e-003, 6.738945e-003, 4.997767e-003, 1.461585e-002, 1.196870e-002, -2.264273e-003, -8.373638e-004, 1.024615e-002, -1.123972e-002, -1.025866e-002, -1.908315e-002, -1.345194e-002, 1.044330e-003, -3.774025e-003, -1.193055e-002, 6.571246e-004, -3.178312e-003, 3.669318e-004, 6.072346e-003, -1.763271e-003, -2.336041e-002, -4.359133e-002, -2.720887e-002, 5.977420e-003, 3.537323e-002, 4.333216e-002, 5.104709e-002, 5.321566e-002, 4.722620e-002, 2.501763e-002, 4.667787e-004, -1.000591e-002, -3.978953e-003, 7.898865e-003, 2.144428e-002, 3.008428e-002, 3.025149e-002, 3.363818e-002, 2.976126e-002, 1.106741e-002, -1.118274e-002, -2.522609e-002, -2.221967e-002, -1.496624e-002, -3.825692e-003, -1.338697e-003, -8.428894e-003, -1.129797e-003, 2.652797e-003, 8.316142e-003, 7.095865e-003, 1.965274e-003, 7.356810e-003, 1.408982e-003, -2.125952e-002, -1.545114e-002, -1.760984e-002, -3.287454e-003, 1.429666e-003, -7.446190e-003, -5.881787e-003, 8.798331e-003, 7.841941e-003, 8.679051e-004, 2.489998e-003, 2.747058e-003, -1.054852e-002, -3.163644e-002, -1.894461e-002, 1.666461e-002, 3.742798e-002, 3.671110e-002, 4.561332e-002, 5.004679e-002, 4.694263e-002, 3.932305e-002, 3.177321e-002, 2.789346e-002, 3.279048e-002, 3.219414e-002, 3.548923e-002, 4.271366e-002, 4.369489e-002, 4.081087e-002, 3.749855e-002, 1.821840e-002, -5.326856e-003, -2.020465e-002, -1.664272e-002, -1.169479e-002, -1.821142e-003, 2.497810e-004, -4.588648e-003, -7.479891e-003, -6.788013e-003, 3.097295e-003, 3.599977e-003, 4.756283e-003, 9.274440e-003, -8.008870e-003, -2.443619e-002, -6.226567e-003, -8.756415e-003, 1.052054e-002, 1.058908e-002, -1.059556e-002, -6.764607e-003, 6.975073e-003, 1.190898e-002, 1.364930e-003, -3.832574e-003, 3.440566e-003, 1.763876e-003, -1.589925e-002, -1.019727e-002, 1.733663e-002, 3.255554e-002, 3.149560e-002, 3.320543e-002, 3.564540e-002, 3.051326e-002, 2.038969e-002, 1.913019e-002, 1.970542e-002, 2.328708e-002, 2.219752e-002, 2.426288e-002, 2.486739e-002, 2.769722e-002, 3.019290e-002, 3.375387e-002, 2.351882e-002, 8.278078e-004, -1.628622e-002, -1.199597e-002, -6.990124e-003, 2.582963e-003, 4.729145e-003, 1.731170e-003, -1.231572e-002, -1.304976e-002, -7.669515e-003, -3.906258e-003, 7.356812e-003, 1.431629e-002, 3.476502e-003, -2.941633e-002, -2.731752e-003, -4.655798e-003, 1.347895e-002, 1.724017e-002, -6.247255e-003, -6.703958e-003, 5.768460e-003, 8.349360e-003, -4.244888e-003, -1.049653e-002, 3.228928e-004, 1.085534e-002, -1.946030e-004, -5.136498e-003, 1.519197e-002, 3.151353e-002,

© ISO/IEC 2004 — All rights reserved


Copyright International Organization for Standardization
Provided by IHS under license with ISO
No reproduction or networking permitted without license from IHS
Not for Resale

3.912233e-002, 3.631552e-002, 2.395611e-002, 1.637200e-002, 1.235706e-002, 1.537298e-002, 2.043610e-002, 2.136557e-002, 2.675464e-002, 3.165050e-002, 3.162110e-002, 3.248323e-002, 3.492026e-002, 3.820000e-002, 2.865271e-002, 3.019739e-003, -1.171161e-002, -9.282456e-003, -3.989911e-003, 3.049532e-003, 1.092510e-002, 7.896182e-003, -1.051461e-002, -1.210609e-002, -1.669244e-002, -1.404599e-002, 9.805906e-003, 1.691330e-002, 6.084891e-003, -2.672176e-002, 6.559093e-003, 2.495371e-003, 1.085894e-002, 1.376981e-002, 1.669958e-003, -3.612740e-003, 3.294031e-003, 2.159891e-003, -6.889523e-003, -1.153171e-002, -4.290375e-003, 1.017647e-002, 7.641260e-003, 1.658308e-003, 1.382860e-002, 2.978608e-002, 3.540112e-002, 2.173207e-002, 5.168325e-003, 5.460908e-004, 6.873952e-003, 1.386914e-002, 2.244189e-002, 2.839403e-002, 2.994068e-002, 3.736373e-002, 3.902093e-002, 4.027055e-002, 4.132065e-002, 3.853804e-002, 2.562097e-002, 2.061829e-003, -6.472717e-003, -5.067720e-003, -2.683099e-003, 1.847120e-003, 1.606864e-002, 8.658056e-003, -2.208811e-003, 3.142400e-003, -1.497469e-002, -1.850293e-002, 3.362734e-003, 9.812585e-003, 3.241836e-003, -2.521409e-002, 4.264421e-003, 2.404370e-003, -1.609559e-003, -4.062594e-003, -3.398699e-003, -3.715820e-003, 1.082331e-003, -4.416222e-003, 2.239260e-004, 4.169905e-004, -9.176621e-003, 3.170616e-003, 1.228773e-002, 1.157137e-002, 1.661279e-002, 2.472168e-002, 2.627738e-002, 1.474482e-002, -1.508115e-003, -1.316090e-003, 8.017851e-003, 1.358410e-002, 2.219576e-002, 2.658411e-002, 2.791706e-002, 3.040922e-002, 3.150878e-002, 3.360030e-002, 3.176402e-002, 2.985810e-002, 1.782646e-002, 3.559951e-003, -5.237009e-003, -8.225458e-003, -6.990588e-003, 2.583781e-003, 1.241816e-002, 2.552372e-004, 9.838147e-003, 1.930530e-002, -5.151487e-003, -1.352770e-002, 1.790381e-003, 6.619564e-003, 1.483582e-004, -2.318003e-002, -8.293676e-004, -8.074722e-003, -1.190638e-002, -9.439374e-003, -5.184344e-003, 2.182722e-004, 2.723845e-003, -4.011568e-003, 6.712429e-003, 1.361440e-002, -9.676450e-003, -6.892973e-003, 1.450020e-002, 2.421471e-002, 2.378084e-002, 2.263824e-002, 2.294638e-002, 1.191287e-002, -4.462713e-003, -1.084749e-002, 8.115438e-004, 1.494551e-002, 2.254459e-002, 2.653287e-002, 2.859583e-002, 2.690026e-002, 2.086100e-002, 1.625914e-002, 1.882396e-002, 1.893395e-002, 1.354065e-002, 5.674854e-003, -5.529995e-003, -1.336402e-002, -7.854170e-003, 7.259950e-004, 1.168667e-003, -2.295104e-003, 2.170541e-002, 2.484281e-002, 1.453809e-003, 8.413677e-004, 1.245575e-002, 9.187148e-003, -2.189262e-004, -2.173017e-002, 1.287320e-004, -6.323904e-003, -9.059700e-003, -7.264896e-003, -6.896541e-003, 2.168807e-003, 6.925424e-003, -5.513502e-003, 6.062972e-003, 1.859936e-002, 4.753816e-004, -1.239024e-002, 5.966381e-003, 2.495594e-002, 2.651221e-002, 2.048547e-002, 1.743754e-002, 1.207737e-002, -1.077143e-003, -9.112836e-003, -7.081617e-003, 3.192027e-003, 9.592903e-003, 1.536750e-002, 1.454206e-002, 1.148866e-002, 8.298459e-003, 7.252880e-003, 9.798892e-003, 1.194409e-002, 1.037701e-002, 4.828553e-003, -4.803447e-003, -1.396613e-002, -8.327980e-003, -8.448890e-004, -4.444080e-003, 1.462034e-003, 2.374876e-002, 1.616171e-002, -1.476624e-004, 1.187643e-003, 1.512932e-002, 1.250530e-002, -1.879634e-004, -1.943165e-002, 5.001734e-003, 1.336850e-003, 9.194574e-003, -2.648558e-003, -4.648541e-003, 1.969917e-003, 7.104751e-003, -2.270872e-003, -7.099061e-005, 2.087532e-002, 1.479617e-002, -4.388230e-003, -3.706968e-003, 1.810113e-002, 2.637001e-002, 1.930508e-002, 1.699027e-002, 1.748516e-002, 7.848404e-003, -1.375173e-003, -4.791232e-003, 1.434483e-003, 6.262086e-003, 9.865160e-003, 8.468204e-003, 5.468878e-003, 3.659354e-003, 6.381378e-003, 9.472559e-003, 1.405380e-002, 1.463179e-002, 1.218072e-002, 2.249928e-003, -1.042839e-002, -8.497504e-003, -9.260621e-004, 4.319571e-004, 5.331361e-003, 1.873027e-002, -5.133132e-004, -6.456096e-003, -2.431183e-003, 7.942722e-003, 4.298183e-003, -3.904586e-003, -1.676098e-002, 1.183866e-002, 6.209006e-003, 9.915179e-003, -1.883273e-003, -8.983765e-003, -6.867356e-003, 4.215182e-003, -1.573253e-003, -8.985429e-003, 1.401154e-002, 2.095899e-002, 6.152050e-004, -7.668099e-003, 6.509782e-003, 1.496496e-002, 1.159744e-002, 1.259665e-002, 1.821829e-002, 1.851620e-002, 1.233978e-002, 4.015690e-003, 2.440121e-003, 5.410326e-003, 6.408573e-003, 9.865907e-004, -3.933813e-003, -3.197885e-003, 1.615945e-003, 9.595169e-003, 1.778018e-002, 2.045665e-002, 2.387909e-002, 1.159783e-002, -1.020846e-004, -8.287354e-003, 2.019577e-003, 2.835902e-003, -6.751910e-003, 2.022670e-003, -1.620702e-002, -1.957384e-002, -5.353734e-003, 1.278304e-003, -7.279871e-003, -5.610029e-003, -1.044196e-002, 1.722820e-002, 8.376398e-003, 7.744580e-003, -6.576482e-003, -1.290716e-002, -1.419599e-002, -2.791348e-004, -7.220808e-003, -2.051831e-002, -3.937175e-004, 1.309171e-002, 2.915065e-003, -1.338535e-002, -2.755667e-003, 5.819644e-003, 9.901770e-004, -5.653127e-004, 1.110536e-002, 1.425812e-002, 1.032269e-002, -7.299559e-004, -9.290831e-003, -1.225926e-002, -1.454539e-002, -1.964912e-002, -2.056776e-002, -1.705556e-002, -1.060688e-002, 2.408051e-003, 1.556307e-002, 2.710875e-002, 2.846255e-002, 1.752926e-002, 6.763252e-003, -4.479346e-003, 1.220260e-002, -8.070608e-004, -1.168378e-002, -3.845874e-003, -2.230144e-002, -1.922262e-002, -1.172717e-003, -3.356924e-003, -1.995038e-002, -1.565301e-002, -9.240633e-003, 2.221971e-002, 4.113650e-003, 7.044949e-004, -1.432048e-002, -2.268514e-002, -1.596389e-002, 8.540960e-003, 6.292267e-003, -7.175865e-003, 8.838000e-005, 7.301188e-003, 3.047151e-003, -1.025935e-002, -7.306180e-003, -3.536553e-003, -6.670394e-003, -2.796555e-003, 5.909223e-003, 5.599404e-003, 1.788401e-003, -6.805793e-003, -1.812445e-002, -2.349240e-002, -2.992369e-002, -3.633713e-002, -3.270866e-002, -2.701160e-002, -1.836901e-002, -8.378016e-004, 1.708647e-002, 2.546862e-002, 2.470429e-002,


© ISO/IEC 2004 — All rights reserved
--`,,```,,,,````-`-`,,`,,`,`,,`---

Copyright International Organization for Standardization
Provided by IHS under license with ISO
No reproduction or networking permitted without license from IHS
Not for Resale

1.308142e-002, 3.655496e-003, 4.902752e-003, 2.188255e-002, -6.129929e-004, -1.298775e-002, -3.421992e-003, -2.072204e-002, -1.255289e-002, 8.967011e-003, 1.009266e-002, -1.532637e-002, -1.585134e-002, -1.084663e-002, 2.438857e-002, 1.508772e-003, 3.091878e-004, -1.082984e-002, -1.312811e-002, 1.894966e-003, 2.651503e-002, 2.795006e-002, 1.482717e-002, 8.042732e-003, 8.330099e-003, 9.598539e-003, 7.122456e-003, 2.689862e-003, 5.382515e-003, -3.051987e-004, 1.815831e-003, 1.064328e-002, 5.843422e-003, 2.868342e-003, 1.118660e-003, -8.550141e-003, -1.382084e-002, -1.872470e-002, -2.444371e-002, -2.364758e-002, -1.972527e-002, -1.329832e-002, -1.748572e-003, 1.050777e-002, 1.654114e-002, 1.218075e-002, 3.421372e-003, 2.004787e-003, 7.933383e-003, 1.432874e-002, -3.059165e-003, -1.219331e-002, 9.834653e-004, -8.820041e-003, -1.457618e-002, -5.942907e-003, 5.060561e-003, -3.801854e-003, -1.677218e-003, 1.965295e-003, 1.054610e-002, -1.071829e-002, -3.507269e-003, -1.116378e-002, -5.244615e-003, 1.644484e-003, 1.488857e-002, 2.027619e-002, 1.683010e-002, 2.145029e-003, -5.718635e-003, 6.530079e-003, 1.210116e-002, 7.620687e-003, 5.341843e-003, 1.450387e-004, -6.281881e-003, -5.078789e-003, -2.496630e-003, -1.510056e-003, 5.631871e-003, 7.167071e-003, 1.829464e-003, -3.910388e-003, -1.232231e-002, -1.819146e-002, -2.117420e-002, -1.735212e-002, -3.174736e-003, 3.184287e-003, 6.535884e-003, 1.124685e-003, 3.948793e-003, 5.533028e-003, 2.929971e-003, 4.993644e-003, 9.250395e-005, -4.652569e-003, 1.653005e-002, 9.703221e-003, -1.504475e-004, -4.095519e-003, 3.395410e-003, -2.920529e-004, 8.692495e-003, 8.298524e-003, 8.826533e-003, -1.355045e-002, -1.138399e-002, 4.192168e-003, 4.288578e-003, -4.569670e-003, -5.462659e-003, 3.195978e-003, 8.316887e-003, -1.512219e-002, -1.896968e-002, 2.219222e-003, 6.583597e-003, -1.291279e-003, 4.136689e-004, 6.345745e-003, -2.565508e-003, -1.655199e-002, -1.772654e-002, -1.575001e-002, -9.038191e-003, 1.871474e-003, 6.429215e-003, 7.293241e-003, 5.367134e-003, 1.654435e-003, -4.317345e-003, -9.690484e-003, -1.243220e-002, -7.853663e-003, 4.202140e-005, 9.707061e-004, 4.356476e-003, -1.884834e-003, -7.915131e-003, -4.322802e-004, 2.602141e-003, -1.032348e-003, 1.448519e-002, 1.607349e-002, 1.141243e-003, -3.644919e-003, 4.595611e-003, 4.014643e-003, 6.134942e-003, 4.229754e-003, 2.941197e-003, -1.441869e-002, -6.975377e-003, 9.930489e-003, 5.775306e-003, -9.594152e-003, -1.611419e-002, -3.176711e-003, 3.475261e-003, -9.513869e-003, -1.122902e-002, 8.703809e-003, -5.600716e-003, -1.425895e-002, -2.220797e-003, 8.084384e-003, 6.296421e-003, -8.037103e-003, -1.549782e-002, -1.880783e-002, -1.405224e-002, -2.714394e-003, 3.993780e-003, 6.328996e-003, 7.451870e-003, 4.960568e-003, -8.854010e-004, -8.957067e-003, -1.113316e-002, -6.025013e-003, 2.300366e-003, 3.963087e-003, 8.394328e-004, -6.343942e-003, -6.861892e-003, 6.584402e-003, 1.425893e-002, 1.116881e-002, 7.175365e-003, 1.240092e-002, 6.977136e-003, -3.951113e-003, -8.339000e-003, 7.073233e-003, 7.601849e-003, 7.313270e-003, -1.824803e-003, -8.995150e-003, 5.832568e-003, 2.059680e-002, 1.262765e-002, -5.743789e-003, -1.739180e-002, 1.117704e-003, 1.385693e-002, 5.536340e-003, 3.275243e-003, 1.390850e-002, -9.793498e-003, -2.354728e-002, -8.973461e-003, 7.873697e-003, 1.533956e-002, 1.083530e-002, 4.556289e-003, -6.388226e-003, -6.655183e-003, -3.484647e-003, -9.169311e-004, 2.506889e-003, 4.400051e-003, 2.788314e-003, 1.999273e-003, -1.535017e-003, -1.640899e-003, 3.875770e-003, 9.178970e-003, 1.055717e-002, 9.436841e-004, -4.095923e-003, -7.130266e-003, 1.145807e-002, 1.680440e-002, 4.060670e-003, -2.140555e-003, -1.189031e-003, 5.481641e-003, -6.325424e-003, -1.907388e-002, 4.410446e-004, 8.147032e-003, 1.665132e-002, -3.415444e-003, -5.310163e-003, 1.393882e-002, 2.340726e-002, 5.622808e-003, -3.819685e-003, -7.740989e-003, 2.530830e-003, 1.132131e-002, 2.647462e-003, 3.365265e-003, 5.763598e-003, -9.040883e-003, -3.282709e-002, -2.650710e-002, -4.551573e-003, 5.596761e-003, 8.171196e-003, 6.278398e-003, 2.791527e-003, -1.589643e-003, -1.945501e-003, -2.876030e-003, -4.381906e-003, -4.994693e-003, -3.742942e-003, -1.495675e-003, -2.810902e-003, -6.859572e-003, -6.662674e-003, -4.907124e-003, -7.616047e-003, -1.359324e-002, -1.387254e-002, -1.276624e-002, -9.020555e-004, -1.143246e-002, -2.495852e-002, -2.470846e-002, -2.184011e-002, -6.336538e-003, -1.326764e-002, -3.231273e-002, -2.102391e-002, -9.803742e-003, 5.926535e-004, -7.344112e-003, -8.755511e-003, 1.794302e-003, 7.771060e-003, 2.936538e-003, -6.491947e-003, -3.612696e-003, 3.517288e-003, 1.204523e-002, 3.154549e-003, 1.035408e-002, 7.378742e-003, -3.947518e-003, -2.646570e-002, -2.703938e-002, -9.916125e-003, -1.082985e-003, 2.414869e-003, 9.505693e-004, -3.526209e-003, -8.976753e-003, -9.441474e-003, -1.091189e-002, -1.608785e-002, -1.711141e-002, -1.635822e-002, -1.388635e-002, -1.206491e-002, -1.445764e-002, -2.153874e-002, -2.815363e-002, -2.982860e-002, -2.861994e-002, 2.582082e-004, 1.241814e-002, 2.503404e-002, 1.254532e-002, 2.299985e-003, 2.794876e-003, -7.468454e-004, 1.005816e-002, 1.624927e-002, 1.129284e-002, 5.621050e-003, 6.185874e-003, 1.150409e-002},
{-4.289501e-002, -2.595632e-002, -1.179631e-002, -5.780738e-003, -1.739951e-003, 5.403073e-003, 8.961196e-003, 1.183500e-002, 4.438674e-003, -4.152468e-003, -2.317540e-003, 2.176330e-004, -2.976798e-004, -1.372036e-003, 4.903493e-004, 5.202383e-003, 2.054328e-003, -6.499632e-003, -7.986767e-003, -8.854571e-003, -1.233228e-002, -1.283561e-002, -1.370688e-002, -1.250331e-002, -8.402797e-003, -6.894482e-003, -2.292323e-004, 4.003549e-003, 8.121411e-003, 6.017966e-003, -1.819980e-003, -1.186430e-002, -2.017798e-002, -1.481186e-002, 6.607691e-004, 9.569093e-003, 4.089020e-003, 9.419136e-004, 8.142704e-003, 9.867581e-003, 9.605966e-003, -6.798727e-005, -1.673720e-002, -1.717163e-002, -1.929638e-002, -1.881904e-002, -2.863740e-002, -1.309662e-002, -

© ISO/IEC 2004 — All rights reserved


Copyright International Organization for Standardization
Provided by IHS under license with ISO
No reproduction or networking permitted without license from IHS
Not for Resale

1.181252e-003, 3.217820e-003, 5.001722e-003, 5.490081e-003, 4.637055e-004, -8.011555e-003, -7.229401e-003, 4.800196e-003, 2.235968e-002, 2.812054e-002, 2.284793e-002, 2.235055e-002, 1.919902e-002, 1.990582e-002, 1.582152e-002, 8.368539e-003, -1.872587e-003, -8.055214e-003, -6.772505e-003, -6.563171e-003, -6.798459e-003, -8.927976e-003, -5.716692e-003, -6.201631e-003, -9.874210e-003, -1.044197e-002, -4.979896e-003, 2.836033e-003, 1.291005e-002, 1.323988e-002, -2.850964e-004, -1.548531e-002, -1.345901e-002, 9.411469e-003, 1.376925e-002, 9.947267e-004, -4.711790e-003, -1.391799e-003, 4.462955e-003, -7.063559e-004, -7.164650e-003, -1.583858e-002, -9.011974e-003, -1.256420e-002, -2.296551e-002, -8.089386e-003, 4.515921e-004, 5.686576e-003, 4.785683e-003, 1.754842e-003, -5.034754e-003, -1.189082e-002, -2.233026e-003, 1.767962e-002, 2.133747e-002, 1.244201e-002, 7.835955e-003, 9.523545e-003, 1.695403e-002, 1.621854e-002, 9.024903e-003, -3.466735e-003, -1.300974e-002, -1.335528e-002, -9.183048e-003, -3.910417e-003, -4.197699e-003, -8.328938e-003, -4.198908e-003, 1.167764e-003, 3.721403e-004, -6.674800e-003, -1.248255e-002, -1.157070e-002, -1.952695e-003, 7.682992e-003, 1.037164e-002, 2.321354e-003, -1.404146e-002, -1.138081e-002, 9.428162e-003, 1.699108e-002, 2.555902e-005, -1.035962e-002, 5.860136e-003, 1.212733e-002, 7.564167e-003, 1.960865e-003, 2.969895e-003, 2.301442e-003, -1.589087e-002, -3.749171e-003, 4.188650e-003, 6.635974e-003, 2.853550e-003, 3.198390e-003, -6.392572e-003, -6.755575e-003, 6.122348e-003, 8.918565e-003, -3.507403e-003, -1.736706e-003, 3.954209e-003, 1.079276e-002, 1.141057e-002, 4.168842e-003, -2.177213e-003, -7.237193e-003, -1.452411e-002, -1.289986e-002, -1.081820e-002, -1.278178e-002, -1.535040e-002, -1.912790e-002, -1.823092e-002, -8.941406e-003, -4.065418e-003, -2.397474e-003, -4.299772e-003, -5.853543e-003, -1.043346e-002, 2.567310e-004, 1.065262e-002, 1.315042e-002, 8.842900e-003, -9.564316e-003, -8.002250e-004, 1.656551e-002, 1.630968e-002, -1.255733e-002, -3.644245e-003, 1.696257e-002, 1.185653e-002, 1.264976e-002, 1.513683e-002, 1.572398e-002, -9.610925e-003, 1.478938e-003, 3.858803e-003, -1.764720e-003, -2.753545e-004, -4.554194e-004, -6.808904e-003, -9.131758e-003, -3.242534e-003, -1.134532e-002, -1.053321e-002, 2.369939e-003, 1.090745e-002, 1.328482e-002, 9.556706e-003, 6.305461e-003, 3.682379e-003, 2.399159e-003, -5.346203e-003, -7.038371e-003, -1.558317e-002, -2.622897e-002, -3.525570e-002, -4.150063e-002, -3.918581e-002, -2.953610e-002, -1.725184e-002, -7.991643e-003, -4.993240e-003, -2.256282e-003, -1.844136e-003, 5.741801e-004, 8.237566e-003, 1.750564e-002, 3.002878e-002, 1.822192e-002, 3.035082e-003, 1.281830e-002, 2.769602e-002, 9.126801e-003, 1.807706e-003, 2.024662e-002, 1.202492e-002, 6.605688e-003, 2.237508e-002, 2.626332e-002, -3.501550e-003, 4.896219e-003, -6.191662e-004, -5.064979e-003, -8.467843e-003, -4.254467e-003, -1.549074e-002, -1.274320e-002, -1.182939e-002, -1.571337e-002, 3.739963e-004, 1.186718e-002, 1.196337e-002, 4.560474e-003, 1.742566e-003, 2.573632e-003, 6.669220e-003, 9.112551e-003, 1.915392e-003, -9.552180e-003, -3.074903e-002, -4.829458e-002, -6.247859e-002, -6.866919e-002, -6.500847e-002, -5.578648e-002, -3.898747e-002, -2.481964e-002, -1.490279e-002, -1.060327e-002, -8.173806e-003, -4.734726e-003, 1.171211e-003, 4.972822e-003, 1.272679e-002, 1.861909e-002, 1.868982e-003, -1.379680e-003, 7.939681e-003, 6.480515e-003, -1.594693e-003, 3.746784e-003, 7.416740e-004, -7.627038e-003, 4.699021e-003, 2.042607e-002, 2.766004e-004, 4.031959e-003, 2.308479e-004, -4.516484e-003, -4.120741e-003, -2.142656e-003, -1.740197e-002, -1.075287e-002, -8.911939e-003, -5.588885e-003, 7.264244e-003, 1.417052e-002, 9.697176e-003, -9.774636e-004, -9.275078e-005, 8.518625e-003, 2.430493e-002, 2.925663e-002, 1.878092e-002, 4.259777e-003, -2.229822e-002, -4.477848e-002, -6.364199e-002, -6.768492e-002, -6.269084e-002, -5.587033e-002, -4.317592e-002, -2.759224e-002, -1.561632e-002, -4.335255e-003, -2.142830e-003, -1.241709e-003, -2.414386e-003, 5.905623e-003, 7.238671e-003, 1.232208e-002, 1.037661e-002, 5.984422e-003, 2.207397e-003, 5.708291e-003, -7.645467e-004, 1.811842e-003, 6.122730e-003, -7.160075e-003, -8.017250e-003, 1.069565e-002, 9.118100e-004, 5.496375e-003, 7.732464e-003, -2.370482e-003, -2.240992e-003, 1.512520e-003, -1.446027e-002, -7.517294e-003, -3.132252e-003, 4.488886e-003, 9.751332e-003, 1.132127e-002, -2.339662e-003, 1.699353e-003, 5.056594e-003, 1.841747e-002, 3.910661e-002, 4.357296e-002, 3.510926e-002, 1.747878e-002, -8.461910e-003, -3.363386e-002, -4.869446e-002, -5.593199e-002, -5.060873e-002, -4.179820e-002, -3.127613e-002, -1.928935e-002, -4.615851e-003, 7.590911e-003, 1.065886e-002, 1.011174e-002, 4.698845e-003, 5.070833e-003, 1.318991e-002, 1.461831e-002, 8.359665e-003, 4.077164e-003, 3.156286e-003, 1.630263e-003, -3.239704e-003, -2.402105e-004, 6.269734e-003, -1.067591e-002, -1.698560e-002, 2.283994e-003, 1.568158e-003, 7.139369e-003, 7.714484e-003, -6.986889e-003, -1.662889e-003, 8.514269e-003, -1.082282e-002, -1.118768e-003, 5.579843e-003, 9.787713e-003, 1.318455e-002, 5.916970e-003, 4.465010e-003, 6.615117e-003, 7.069483e-003, 1.503285e-002, 3.267776e-002, 3.894653e-002, 2.908934e-002, 1.176584e-002, -1.010145e-002, -3.350117e-002, -4.414502e-002, -4.509048e-002, -3.719487e-002, -2.872190e-002, -2.215919e-002, -1.415341e-002, -7.535680e-005, 1.271943e-002, 2.162943e-002, 2.459675e-002, 2.462722e-002, 1.907882e-002, 1.481448e-002, 1.969188e-002, 1.909797e-002, 2.250716e-003, 7.022691e-003, 7.999591e-003, -9.747770e-004, -1.523849e-003, 8.642648e-003, -7.098598e-003, -1.700195e-002, 1.561566e-003, 9.846965e-004, 6.674637e-003, 4.023216e-003, -8.246610e-003, 1.021666e-002, 1.487151e-002, -4.735876e-003, 3.534728e-003, 9.466299e-003, 9.494123e-003, 2.132659e-002, 1.136237e-002, 1.095957e-002, 1.177132e-002, 1.376992e-002, 1.822121e-002, 1.963462e-002, 2.651035e-002,


© ISO/IEC 2004 — All rights reserved

Copyright International Organization for Standardization
Provided by IHS under license with ISO
No reproduction or networking permitted without license from IHS
Not for Resale

2.273341e-002, 9.787473e-003, -1.256686e-002, -3.106983e-002, -3.862365e-002, -3.667305e-002, -2.794331e-002, -1.729805e-002, -1.295498e-002, -6.772120e-003, 3.127512e-003, 1.185527e-002, 2.143967e-002, 2.788879e-002, 3.168535e-002, 3.244781e-002, 2.748846e-002, 2.107577e-002, 2.541011e-002, 1.261887e-002, -1.111321e-003, 8.786637e-003, 6.380101e-003, -2.830856e-003, -1.880368e-004, -4.913269e-003, -6.794339e-003, 4.873602e-003, -1.736465e-003, 1.341174e-002, -3.217259e-003, -6.549149e-004, 2.710323e-002, 1.626407e-002, -6.930131e-003, 2.454563e-003, 3.666027e-003, 1.374377e-002, 2.399871e-002, 1.519094e-002, 2.308106e-002, 2.027598e-002, 2.576433e-002, 2.357274e-002, 2.170774e-002, 2.789426e-002, 2.667303e-002, 1.515817e-002, -3.552688e-003, -1.572624e-002, -2.447874e-002, -2.342381e-002, -1.363025e-002, -4.918835e-003, -2.584982e-003, 3.606254e-003, 9.087961e-003, 1.713219e-002, 2.432300e-002, 3.161706e-002, 3.250108e-002, 3.604922e-002, 3.286464e-002, 2.710323e-002, 2.865938e-002, 2.236919e-002, -1.388051e-003, 7.659446e-004, 1.833576e-002, -1.825518e-003, -8.220260e-003, -5.555258e-003, 1.785344e-003, 6.674945e-003, -3.178434e-003, 1.216584e-002, -5.767375e-003, 8.985207e-003, 3.077399e-002, 1.014541e-002, -7.210813e-003, -3.012377e-004, 3.185705e-003, 1.599998e-002, 1.744915e-002, 1.772076e-002, 3.121752e-002, 3.053071e-002, 2.567023e-002, 1.666155e-002, 2.083796e-002, 2.818434e-002, 2.789235e-002, 2.225056e-002, 9.013301e-003, 6.125907e-004, -5.242082e-003, -4.358945e-003, 2.245877e-003, 8.190613e-003, 8.024026e-003, 1.419986e-002, 1.893871e-002, 2.503563e-002, 3.242627e-002, 3.805429e-002, 3.764221e-002, 3.341920e-002, 3.417191e-002, 3.201277e-002, 2.773336e-002, 2.261872e-002, -1.425456e-003, -5.675144e-003, 2.135420e-002, 3.988116e-003, -1.189972e-002, -5.085310e-004, 1.064870e-002, 1.467948e-002, -3.478850e-003, 9.069473e-003, -9.846165e-003, 6.767297e-003, 2.255777e-002, 7.762913e-003, -8.431640e-003, 1.408393e-003, 2.740957e-003, 3.588712e-003, 5.308050e-003, 2.300024e-002, 3.352365e-002, 2.259830e-002, 7.457691e-003, 6.834823e-004, 9.158923e-003, 1.595886e-002, 1.813535e-002, 1.677367e-002, 6.848734e-003, 1.750340e-003, -3.365981e-003, 9.881000e-004, 9.431704e-003, 1.444043e-002, 1.218972e-002, 1.794483e-002, 2.472520e-002, 2.989192e-002, 3.644298e-002, 4.068518e-002, 3.783792e-002, 3.286183e-002, 2.839969e-002, 2.444936e-002, 2.074270e-002, 1.720035e-002, -8.461842e-004, -1.305179e-002, 1.798394e-002, 1.714863e-002, -1.017850e-002, 1.629230e-003, 1.285158e-002, 1.597323e-002, -2.561473e-003, 6.156239e-003, -1.272798e-002, 3.688279e-003, 1.715654e-002, -2.148559e-003, -9.504199e-003, 3.639432e-003, -1.029946e-004, -9.248352e-003, -1.280835e-003, 2.615697e-002, 2.652661e-002, 8.627669e-003, -7.604662e-003, -1.149345e-002, -3.054159e-003, 5.756926e-003, 7.222935e-003, 6.164775e-003, -5.319198e-003, -7.310073e-003, -1.018369e-002, -4.427462e-003, 4.686749e-003, 6.879671e-003, 4.017595e-003, 6.955652e-003, 1.172198e-002, 1.721675e-002, 2.338813e-002, 2.829145e-002, 2.960913e-002, 2.328940e-002, 1.735306e-002, 9.862651e-003, 9.120910e-003, 9.160715e-003, -1.924006e-003, -1.406611e-002, 5.469473e-003, 2.084831e-002, -8.187293e-003, -5.667365e-004, 1.027946e-002, 4.996206e-003, -2.011756e-003, 2.756005e-003, -9.027118e-003, -5.550074e-003, 7.021760e-003, -1.274709e-002, -1.168263e-002, 3.709690e-003, -9.191355e-003, -1.928961e-002, 4.140965e-003, 2.839744e-002, 1.626302e-002, -3.736578e-003, -1.795266e-002, -1.928681e-002, -1.241072e-002, -4.046832e-003, -1.362553e-003, -3.048237e-003, -1.303884e-002, -1.808605e-002, -1.955114e-002, -1.467300e-002, -1.027090e-002, -1.003460e-002, -1.567249e-002, -1.292244e-002, -6.247479e-003, -1.398777e-003, 7.186785e-003, 1.567450e-002, 1.864579e-002, 1.485965e-002, 7.127428e-003, -8.537060e-003, -1.069444e-002, -5.005027e-003, -1.051087e-002, -1.398247e-002, -2.857474e-003, 1.075486e-002, -6.371134e-003, 9.665083e-003, 5.758308e-003, -3.602991e-003, -3.099396e-003, -2.472843e-003, -3.714101e-003, -8.579881e-003, -2.526714e-003, -1.458316e-002, -1.002397e-002, 1.814582e-003, -1.138544e-002, -1.728906e-002, 5.976054e-003, 1.978913e-002, 4.450372e-003, -1.694023e-002, -2.786875e-002, -2.599230e-002, -2.094041e-002, -1.260556e-002, -7.875816e-003, -9.155274e-003, -1.909455e-002, -2.685309e-002, -3.061643e-002, -2.554690e-002, -2.475130e-002, -2.346721e-002, -2.299676e-002, -2.383836e-002, -1.742012e-002, -9.925590e-003, 1.988305e-003, 8.594181e-003, 1.336679e-002, 1.311812e-002, 7.126244e-003, -1.136998e-002, -2.301363e-002, -2.070031e-002, -2.285167e-002, -1.490257e-002, -1.417360e-002, -3.767899e-003, -7.399843e-003, 8.621195e-003, 9.651207e-004, -9.806141e-003, -3.056250e-003, -2.422181e-003, 4.342101e-004, -1.135443e-002, -1.658932e-003, -8.199255e-003, -5.730655e-003, -1.256719e-003, -1.482847e-002, -1.682042e-002, 4.706857e-003, 1.236358e-002, -1.023989e-002, -3.334884e-002, -4.138296e-002, -3.424514e-002, -2.623296e-002, -1.444796e-002, -6.413817e-003, -4.337272e-003, -9.561270e-003, -1.890880e-002, -2.467028e-002, -2.500796e-002, -2.649906e-002, -2.125052e-002, -1.402450e-002, -1.550807e-002, -1.476880e-002, -7.113951e-003, 1.321918e-003, 3.624475e-003, 4.425398e-003, 5.573083e-003, 8.724216e-003, -1.854309e-003, -1.985249e-002, -2.839821e-002, -2.936717e-002, -1.475479e-002, -1.998533e-002, -1.144584e-002, -1.034845e-002, 9.700386e-003, -2.362862e-003, -9.639420e-003, 1.024670e-003, 3.304656e-003, 6.399983e-003, -6.159877e-003, 5.685127e-003, -1.744629e-003, -8.695899e-003, -1.070236e-003, -1.387567e-002, -1.570414e-002, 5.129429e-003, -1.809721e-003, -3.306993e-002, -6.289712e-002, -7.757029e-002, -7.452715e-002, -6.304465e-002, -4.066844e-002, -1.442206e-002, 3.357178e-003, 1.109610e-002, 2.470611e-003, -6.089549e-003, -1.122823e-002, -1.163922e-002, -4.255989e-003, 8.138897e-004, -2.221823e-003, -1.382007e-002, -2.108968e-002, -2.593760e-002, -3.335399e-002, -3.435098e-002, -2.667505e-002, -

© ISO/IEC 2004 — All rights reserved


Copyright International Organization for Standardization
Provided by IHS under license with ISO
No reproduction or networking permitted without license from IHS
Not for Resale

8.756767e-003, -2.466852e-003, -9.679867e-003, -2.707856e-002, -3.114499e-002, -1.506042e-002, -8.909779e-003, -1.573966e-002, -7.356265e-003, 1.634869e-002, -5.032054e-003, -1.444868e-002, 4.009428e-003, 1.119590e-002, 1.492387e-002, 7.146171e-003, 1.510552e-002, -9.429774e-004, -7.802890e-003, 2.881348e-003, -1.356886e-002, -6.961826e-003, 1.022818e-002, -8.433046e-003, -4.092398e-002, -6.068491e-002, -5.998891e-002, -5.349984e-002, -4.281352e-002, -3.505724e-002, -1.745172e-002, 3.886472e-003, 2.506544e-002, 2.657764e-002, 1.667080e-002, 9.736316e-003, 1.146187e-002, 1.737484e-002, 1.529663e-002, 5.430375e-003, -1.367984e-002, -2.667623e-002, -3.991680e-002, -5.436371e-002, -6.627044e-002, -6.255160e-002, -4.344180e-002, -1.672207e-002, -3.145573e-003, -1.390399e-002, -1.910484e-002, -8.685901e-003, -1.274947e-003, -2.457598e-002, -5.470212e-003, 1.996158e-002, -6.355509e-003, -1.941311e-002, 1.383742e-002, 2.042387e-002, 2.543409e-002, 1.451624e-002, 1.983875e-002, 4.674128e-003, -1.853000e-003, 1.162103e-002, 4.222030e-003, 5.830943e-003, 1.269761e-002, -2.130856e-002, -4.788657e-002, -4.493200e-002, -2.181114e-002, -3.785669e-003, 4.032717e-003, 1.557084e-003, -5.033094e-003, -5.858110e-004, 1.129313e-002, 2.171578e-002, 2.101263e-002, 1.846710e-002, 1.958493e-002, 1.877606e-002, 1.233421e-003, -8.717267e-003, -1.403678e-002, -1.584266e-002, -2.536282e-002, -3.747307e-002, -5.472364e-002, -6.256512e-002, -5.301987e-002, -2.754940e-002, 5.673997e-003, 6.955678e-003, -3.139450e-004, 2.817009e-003, 7.608639e-004, -2.069036e-002, 1.624059e-003, 1.728356e-002, -4.277759e-003, -9.078070e-003, 2.137217e-002, 2.498604e-002, 1.736638e-002, 1.599493e-002, 1.832981e-002, 7.172863e-003, 1.548911e-003, 1.706624e-002, 1.824238e-002, 5.231427e-003, -1.214914e-002, -5.594476e-002, -7.819857e-002, -7.525550e-002, -6.450021e-002, -5.456763e-002, -3.431179e-002, -1.951051e-002, -1.008200e-002, -3.222160e-003, -7.251548e-004, -6.553414e-003, -1.133422e-002, -1.119121e-002, -9.196484e-003, -2.852838e-003, -1.082100e-002, -2.401552e-002, -3.703216e-002, -4.903330e-002, -6.058592e-002, -7.131789e-002, -7.353821e-002, -7.050944e-002, -5.654591e-002, -3.171945e-002, 3.598559e-003, 2.299418e-002, 2.064849e-002, 2.285876e-002, 1.084072e-002, -3.997922e-003, 1.011400e-002, 1.386762e-002, -2.832089e-003, -2.343116e-003, 2.895341e-002, 2.462884e-002, 1.723397e-002, 1.446721e-002, 1.139275e-002, 7.759950e-003, -3.957327e-004, 1.403322e-002, 1.492905e-002, -4.901091e-003, -1.231337e-002, -2.018426e-002, -1.161903e-002, 3.654235e-003, 1.311706e-002, 1.630748e-002, 2.522311e-002, 4.211182e-002, 4.877897e-002, 4.288817e-002, 1.679718e-002, -1.975827e-002, -3.657339e-002, -3.917204e-002, -2.917432e-002, -3.480196e-003, 2.158305e-002, 2.383790e-002, 1.551615e-002, 4.293553e-003, -3.617059e-003, -5.286272e-003, -9.654995e-003, -2.145827e-002, -3.100381e-002, -2.661790e-002, -4.297894e-004, 2.624257e-002, 3.370807e-002, 3.002134e-002, 1.604715e-002, 1.464070e-002, 2.215712e-002, 1.005852e-002, 1.870733e-003, 4.234145e-003, 2.410745e-002, 1.507609e-002, 1.540387e-002, 1.372659e-002, -5.263571e-003, 9.128029e-003, 6.510560e-004, 5.573780e-003, 3.238282e-003, -1.189171e-002, 9.902309e-003, 4.387651e-002, 5.044291e-002, 3.802453e-002, 3.723647e-002, 3.194320e-002, 1.192206e-002, 2.245999e-002, 5.588445e-002, 6.801793e-002, 3.686645e-002, -3.274836e-002, -6.393663e-002, -6.483740e-002, -5.165345e-002, -2.128601e-003, 4.041843e-002, 5.114462e-002, 3.664304e-002, 2.887357e-002, 3.623006e-002, 4.264797e-002, 5.057989e-002, 4.734731e-002, 2.393038e-002, 7.200785e-006, 4.682398e-004, 1.328552e-002, 2.375040e-002, 1.813503e-002, 5.977606e-003, 2.448805e-002, 2.195272e-002, 3.358168e-003, 1.308617e-002, 6.773857e-003, 8.865751e-003, -6.997507e-003, -2.816559e-003, 9.035497e-003, -1.453778e-002, 7.036406e-003, 1.382940e-003, 4.137848e-003, -2.391070e-003, 1.222364e-003, 1.770314e-002, 3.424476e-002, 1.702082e-002, -6.960505e-004, 3.116942e-002, 2.683859e-002, -1.252864e-002, -3.771921e-003, -3.504867e-003, 2.541427e-003, 1.591591e-002, -4.361398e-002, -7.713447e-002, -6.676686e-002, -5.670960e-002, -3.860938e-002, -4.296485e-004, 4.760139e-003, -3.539346e-003, 1.324876e-002, 1.919369e-002, 3.905241e-002, 7.183450e-002, 6.413843e-002, 3.014431e-002, 1.045225e-002, -7.803138e-004, -1.940626e-002, -2.221474e-002, -2.367096e-002, -2.982548e-002, 3.788120e-003, -4.883278e-003, -4.637562e-003, 1.170534e-002, -3.490613e-004, -1.410075e-003, -2.351390e-002, -8.266474e-003, 4.301984e-003, -1.914052e-002, 2.066445e-003, -2.080042e-003, 3.351455e-003, 2.031537e-002, 1.403273e-002, 1.091545e-003, -1.097093e-002, -2.959760e-002, 6.329321e-003, 8.470361e-002, 8.109383e-002, 3.684974e-002, 1.093404e-002, -5.808491e-002, -6.137586e-002, -2.840700e-002, -6.156840e-002, -5.822234e-002, -3.969903e-002, -3.787090e-002, -8.091065e-002, -5.994110e-002, -5.768153e-002, -4.840562e-002, 7.573614e-003, 2.311249e-002, 3.963545e-002, 4.476157e-002, 2.495059e-002, 1.242268e-003, -4.327406e-003, -1.541888e-003, -1.797431e-002, -2.494088e-002, -2.699147e-002, -3.797443e-002, -2.720277e-003, -1.547531e-002, -5.435068e-003, 1.394347e-002, -1.531892e-003, -1.352427e-002, -2.628800e-002, -8.872542e-003, 4.980792e-003, -1.748963e-002, 1.316848e-003, -3.949368e-003, 9.555172e-003, 2.575851e-002, 1.258595e-002, -9.939197e-003, -1.934516e-002, -1.076599e-002, 2.966925e-002, 6.356348e-002, 7.697828e-002, 4.371689e-002, -1.439290e-002, -5.662609e-002, -5.869483e-002, -5.549985e-002, -7.425472e-002, -4.249992e-002, -1.952341e-002, -1.957652e-002, -8.608692e-002, -8.168952e-002, -5.014330e-002, -2.757855e-002, 3.074189e-003, 3.198785e-002, 3.052646e-002, 1.310158e-002, -6.350121e-003, -1.162565e-002, 6.777110e-004, 9.720866e-003, 5.117750e-003, 7.513189e-003, 1.844350e-003, -8.597738e-003, -3.853622e-003, -1.957732e-002, -1.585362e-003, 1.640080e-002, -8.302491e-003, -1.670480e-002, -2.870430e-002, -1.488277e-002, -1.584839e-003, -


© ISO/IEC 2004 — All rights reserved

--`,,```,,,,````-`-`,,`,,`,`,,`---

Copyright International Organization for Standardization
Provided by IHS under license with ISO
No reproduction or networking permitted without license from IHS
Not for Resale

1.669572e-002, -2.106398e-003, -4.588048e-003, 7.500524e-003, 1.829209e-002, 2.593348e-003, -2.561507e-002, -2.397742e-002, -1.535433e-003, 4.301401e-002, 7.625426e-002, 8.543898e-002, 6.284429e-002, 2.310178e-002, -1.188949e-002, -2.822858e-002, -5.947255e-002, -6.149993e-002, -3.903332e-002, -1.909968e-002, -1.459632e-002, -5.873544e-002, -8.022305e-002, -2.586639e-002, 1.471583e-002, 3.917677e-002, 5.125290e-002, 4.403274e-002, 2.441325e-002, 3.608361e-003, -7.765300e-003, -4.185066e-003, -2.948110e-003, 6.297968e-003, 1.847068e-002, 1.970039e-002, 7.837634e-003, -5.588472e-003, -2.629944e-002, 2.684018e-004, 1.040227e-002, -1.328157e-002, -1.378841e-002, -2.734002e-002, -1.618653e-002, -7.916080e-003, -1.039090e-002, -3.623560e-003, -3.331910e-003, 7.764410e-003, 9.019291e-003, -5.760638e-003, -3.118338e-002, -2.572530e-002, -8.777697e-004, 4.446016e-002, 8.011303e-002, 8.766324e-002, 7.020552e-002, 4.397670e-002, 1.954322e-002, -1.676632e-002, -5.115876e-002, -4.040502e-002, -2.920865e-002, -1.432366e-002, -7.020821e-003, -2.500517e-002, -7.095588e-002, -2.732583e-002, 2.634306e-002, 5.204037e-002, 6.522921e-002, 6.097747e-002, 4.368492e-002, 1.569479e-002, 3.090745e-003, -8.828869e-003, -1.379245e-002, 2.145583e-003, 1.420859e-002, 3.145945e-002, 2.257218e-002, -1.560590e-003, -2.227804e-002, 3.609836e-003, -1.237858e-004, -1.587535e-002, -8.703776e-003, -1.403438e-002, -1.137180e-002, -9.712787e-003, -5.650662e-003, 2.748990e-003, -3.212744e-003, 8.698723e-003, 8.221582e-003, -1.029686e-002, -2.983107e-002, -2.646624e-002, -6.629146e-003, 3.044409e-002, 6.132109e-002, 6.905170e-002, 5.734321e-002, 3.237353e-002, 5.434485e-003, -3.004476e-002, -2.950406e-002, -2.024609e-002, -1.535643e-002, -4.363355e-003, -4.760860e-003, -6.286243e-003, -4.192296e-002, -5.066348e-002, 1.079873e-003, 3.338608e-002, 4.617457e-002, 4.312461e-002, 3.131065e-002, 1.138377e-002, 1.398651e-003, -7.985032e-003, -6.065453e-003, 1.486463e-003, 1.586976e-002, 3.017245e-002, 2.849066e-002, 1.069840e-002, -6.898236e-003, 4.601458e-003, -9.910128e-003, -1.048176e-002, 2.915712e-004, -7.696652e-004, -3.159560e-003, -7.258912e-003, -1.690315e-003, 5.229950e-003, -8.121707e-003, 7.698361e-003, 7.873911e-003, -6.137129e-003, -2.463897e-002, -2.700040e-002, -1.419783e-002, 5.396975e-003, 2.055310e-002, 2.044730e-002, 7.808824e-003, -9.104683e-003, -1.979720e-002, -1.748005e-002, -6.259300e-003, -5.902512e-004, 3.619002e-003, 1.319050e-002, 5.607766e-003, 1.481862e-003, -4.530587e-003, -3.678691e-002, -3.400052e-002, -5.799824e-003, 6.645643e-003, 8.927048e-003, 2.376826e-003, -3.723067e-003, -8.001844e-004, 4.560895e-003, 2.142277e-003, 3.611755e-003, 1.668867e-002, 2.630019e-002, 2.330557e-002, 1.890801e-002, 9.901940e-003, -7.510913e-004, -1.238817e-002, -6.143776e-003, 1.632493e-002, 9.291770e-003, 4.581472e-003, -5.677331e-003, -3.603511e-003, 2.203044e-003, -1.444842e-002, 2.453677e-003, 1.829456e-003, 1.480682e-004, -8.567552e-003, -8.801752e-003, -3.335505e-003, -1.900594e-003, -6.665410e-003, -1.422082e-002, -2.645238e-002, -2.976300e-002, -1.092821e-002, 1.199750e-002, 1.347908e-002, 1.974824e-002, 2.839392e-002, 3.458935e-002, 2.481785e-002, 1.390507e-002, 1.038786e-002, 6.520030e-003, -1.405332e-002, -2.332300e-002, -2.340763e-002, -1.633405e-002, -1.110619e-002, -2.750407e-003, 1.324231e-002, 2.374432e-002, 1.212924e-002, 3.467446e-003, 9.773725e-003, 1.382904e-002, 9.266351e-003, 1.614736e-002, 1.194202e-002, -1.116828e-002, -8.643843e-003, 1.412387e-002, 7.587426e-003, 4.875562e-003, 4.668585e-003, -7.750583e-003, -8.789658e-003, 5.394392e-003, -1.179804e-002, -1.643178e-003, -8.824912e-004, 2.649264e-003, 8.397673e-003, 1.735661e-002, 1.880064e-002, 1.714081e-002, 7.803507e-003, -4.082516e-003, -1.039382e-002, -7.137066e-003, 9.511228e-003, 2.849986e-002, 1.342032e-002, 2.247392e-002, 3.924710e-002, 4.440053e-002, 3.040767e-002, 2.692904e-002, 2.278830e-002, 2.891911e-002, 2.459396e-002, 1.100634e-002, 6.377304e-003, 6.831857e-003, 9.645541e-003, 2.213097e-002, 3.522725e-002, 3.627567e-002, 1.256706e-002, -2.095098e-003, 6.457626e-003, 2.610893e-003, -5.698117e-003, 9.173667e-003, 9.226288e-003, -1.700536e-002, -5.209369e-003, 8.691313e-003, 9.438402e-003, -3.914870e-003, 1.722066e-003, -2.584656e-004, -5.750250e-003, 1.104063e-002, -6.045629e-003, -5.973816e-003, -4.063091e-003, 2.749795e-004, 1.527126e-002, 2.634757e-002, 3.279955e-002, 3.333720e-002, 2.602490e-002, 1.357377e-002, 2.780639e-003, -1.109878e-003, 5.886871e-003, 6.144742e-003, -2.360939e-002, -7.264724e-003, 3.518316e-002, 3.822972e-002, 5.886871e-003, 1.748028e-003, 1.747555e-002, 2.119647e-002, 2.772508e-002, 2.829217e-002, 2.901767e-002, 2.664735e-002, 3.021140e-002, 3.727299e-002, 4.369379e-002, 4.063650e-002, 1.178733e-002, -1.022075e-002, -6.082834e-003, -7.915775e-003, -1.284291e-002, 7.951142e-003, 1.064160e-003, -1.324208e-002, 8.440302e-003, 1.123812e-002, 1.371752e-002, -1.035083e-002, -4.991564e-003, 7.107279e-003, 1.492103e-003, 1.313347e-002, -3.467408e-003, -2.213207e-003, -8.516016e-003, -3.618599e-003, 1.484199e-002, 2.366700e-002, 3.260239e-002, 3.364872e-002, 2.678713e-002, 1.496490e-002, 5.672249e-003, 4.229559e-003, -2.844909e-003, -1.755666e-002, -1.397379e-002, 1.592292e-002, 4.655047e-002, 4.806640e-002, 1.670366e-002, -6.798043e-003, -1.077319e-003, 5.814757e-003, 2.109714e-002, 2.634545e-002, 2.586141e-002, 2.151397e-002, 2.413559e-002, 3.018500e-002, 3.743261e-002, 3.321311e-002, 8.054387e-004, -1.879671e-002, -1.080503e-002, -7.403905e-003, -1.384194e-002, -4.293683e-003, -8.609811e-003, -6.703119e-003, 1.026137e-002, 4.586399e-003, 5.191968e-003, -1.753229e-002, -8.552958e-003, 5.400472e-003, 4.347528e-003, 1.003888e-003, -1.739463e-003, 2.950258e-003, -1.009230e-002, -1.197895e-002, 1.082280e-002, 1.853706e-002, 2.666647e-002, 2.747005e-002, 2.048639e-002, 1.178948e-002, 8.799033e-003, 1.081023e-002, 4.313782e-003, -8.592320e-003, -

--`,,```,,,, © ISO/IEC 2004 — All rights reserved



Copyright International Organization for Standardization
Provided by IHS under license with ISO
No reproduction or networking permitted without license from IHS
Not for Resale

1.030407e-002, 1.075875e-002, 3.409366e-002, 5.064554e-002, 2.365237e-002, -9.920109e-003, -8.650429e-003, -4.380497e-003, 1.050660e-002, 1.707516e-002, 1.238359e-002, 1.115836e-002, 1.130958e-002, 1.882170e-002, 2.481398e-002, 1.944587e-002, -1.578331e-002, -2.565465e-002, -6.804655e-003, -3.831050e-003, -1.705084e-002, -2.815569e-002, -1.038301e-002, 1.035393e-003, 1.351171e-002, 5.371577e-003, -7.924298e-003, -2.437667e-002, -9.261005e-003, 8.846051e-003, 6.986171e-003, -8.047755e-003, -5.161448e-003, 1.145770e-002, -3.636756e-003, -1.639593e-002, 5.676853e-003, 1.518970e-002, 1.924061e-002, 1.897281e-002, 1.414354e-002, 1.127762e-002, 1.551611e-002, 1.584382e-002, 8.367226e-003, -2.230482e-004, -3.857712e-003, 1.265554e-002, 2.192450e-002, 3.877550e-002, 2.409826e-002, -6.987707e-003, -1.260505e-002, -2.851200e-004, 1.558722e-002, 1.688873e-002, 6.154525e-003, -3.814371e-003, -4.339630e-003, 5.454019e-003, 1.740776e-002, 8.749766e-003, -2.597004e-002, -2.718097e-002, -8.816767e-003, 1.770260e-003, -2.148098e-002, -3.299863e-002, -9.107170e-003, -3.297391e-003, 4.560325e-003, -1.074509e-003, -1.151854e-002, -2.422480e-002, -8.515051e-003, 7.882581e-003, 8.645594e-003, -4.897617e-003, -5.902313e-003, 2.001343e-002, 1.010265e-002, -1.387659e-002, 2.004743e-003, 1.074598e-002, 1.349128e-002, 1.025592e-002, 1.223879e-002, 1.477629e-002, 2.135150e-002, 1.955782e-002, 1.450724e-002, 1.075754e-002, 1.769577e-002, 3.409247e-002, 3.334970e-002, 3.560951e-002, 2.536002e-002, 2.783437e-003, -4.013472e-004, 1.304430e-002, 2.943210e-002, 3.422590e-002, 1.736681e-002, -7.191968e-003, -1.245095e-002, -1.546650e-003, 1.249454e-002, 1.705601e-003, -2.857003e-002, -2.672148e-002, -3.796034e-003, 8.788628e-003, -1.234843e-002, -8.629416e-003, 2.080112e-003, -7.479817e-003, -1.337026e-002, -1.101232e-002, -5.526122e-003, -1.861922e-003, -2.762353e-003, 9.435445e-003, 1.247844e-002, 7.697614e-003, 7.305448e-004, 2.474414e-002, 2.284370e-002, -5.940720e-003, -2.154076e-003, 6.189075e-003, 8.973162e-003, 7.976523e-003, 8.431506e-003, 9.418644e-003, 1.198098e-002, 1.892259e-002, 2.495061e-002, 2.096064e-002, 1.529707e-002, 1.947388e-002, 1.582037e-002, 9.100397e-003, -3.338969e-004, -1.659109e-002, -1.487494e-002, 9.114213e-004, 2.434509e-002, 3.438392e-002, 2.698060e-002, -1.066611e-003, -1.134734e-002, -1.988912e-003, 1.219055e-002, 1.028197e-004, -2.694615e-002, -2.602389e-002, 1.854565e-003, 2.939125e-002, 2.713972e-002, 2.529345e-002, 1.464680e-002, -1.305454e-002, -1.344108e-002, -1.283660e-002, -3.520429e-003, 1.487932e-002, 5.779245e-003, 1.293499e-002, 2.119252e-003, 1.102723e-003, 1.878293e-003, 2.208242e-002, 2.602534e-002, -4.340907e-003, -5.149099e-003, 4.573330e-003, 1.061507e-002, 8.907452e-003, 7.887493e-003, 4.509073e-003, 4.286013e-003, 1.415604e-002, 3.023622e-002, 2.920665e-002, 2.229808e-002, 2.110251e-002, 2.153609e-002, 1.112117e-002, 1.354112e-003, -1.063293e-002, -1.647479e-002, -1.813455e-002, -6.411988e-003, 5.876341e-003, 1.546368e-002, 5.169296e-003, -4.617524e-003, 8.898669e-004, 1.006519e-002, -2.193759e-003, -2.677563e-002, -2.342197e-002, 9.018660e-003, 3.336480e-002, 3.896398e-002, 3.671186e-002, 1.353705e-002, -9.625093e-003, 2.748824e-003, -8.766666e-003, -3.198598e-003, 1.870657e-002, 5.481307e-003, 7.096918e-003, -7.349783e-003, -1.218480e-002, -4.643648e-004, 1.499212e-002, 1.291569e-002, -1.019059e-002, -8.210192e-003, 3.080491e-003, 7.032714e-003, 8.009636e-003, 9.664753e-003, 1.102563e-002, 5.675569e-003, 9.971089e-004, 6.004480e-003, 1.360216e-002, 3.392808e-002, 4.853775e-002, 5.948399e-002, 4.556394e-002, 3.636391e-002, 1.811722e-002, 4.457024e-003, -8.843500e-003, -1.687339e-002, -5.461433e-003, 1.334592e-002, 1.413046e-002, 3.058073e-003, 9.890373e-003, 1.306347e-002, 3.059583e-003, -1.281846e-002, -1.815796e-002, 1.496128e-002, 1.671226e-002, 1.786452e-002, 1.981166e-002, -2.239753e-003, -9.827562e-004, 2.576273e-002, 1.023275e-003, 5.641942e-003, 2.231345e-002, 3.163002e-003, -1.310391e-003, -7.536277e-003, -1.597965e-002, -6.159493e-003, 4.056126e-003, -1.540373e-003, -8.971287e-003, -5.255440e-003, 2.942211e-003, 3.067467e-003, 4.616499e-003, 7.048574e-003, 1.203364e-002, -3.636102e-003, -2.630904e-002, -3.331316e-002, -1.900003e-002, 4.783459e-003, 2.407388e-002, 3.219601e-002, 2.420751e-002, 1.966008e-002, -3.412858e-004, -1.441388e-002, -2.418745e-002, -2.421850e-002, -1.016283e-002, 1.164927e-002, 1.301827e-002, 3.706519e-003, 1.245889e-002, 1.371343e-002, 9.642270e-003, -2.719578e-003, -7.224899e-003, 1.141662e-002, -3.274542e-003, 4.616872e-004, -5.806940e-003, -1.309110e-002, 9.079167e-003, 3.012258e-002, 3.111028e-003, 1.577482e-003, 1.796216e-002, -2.994920e-003, -1.096982e-002, -1.248805e-002, -1.679455e-002, -5.746917e-003, -1.249435e-003, -5.940981e-003, -1.159186e-002, -1.041476e-002, 7.303197e-003, 3.882537e-003, -2.909252e-003, -2.775856e-003, 9.091201e-003, 2.477964e-003, -1.990391e-003, -1.530237e-003, 3.325263e-003, 1.577700e-002, 2.180831e-002, 2.009476e-002, 9.280551e-003, 2.086706e-003, -1.160022e-002, -1.813674e-002, -1.982540e-002, -1.484126e-002, -4.205123e-003, 3.319295e-003, -1.328593e-003, -2.466736e-003, 1.010389e-002, 1.519571e-002, 1.195888e-002, -4.658758e-004, 1.406860e-003, -8.409349e-005, -1.078782e-002, -8.661549e-003, -1.894355e-002, -1.025932e-002, 2.200090e-002, 2.962223e-002, -1.122167e-003, -3.503917e-003, 1.071654e-002, -1.081302e-002, -1.302617e-002, -1.008842e-002, -1.483850e-002, -3.412937e-003, 2.280982e-003, -2.702140e-003, -1.724767e-002, -1.782520e-002, 1.088172e-002, 8.679269e-003, -9.070787e-003, -1.456961e-002, -3.583817e-003, 1.695094e-003, -2.409695e-003, -3.090328e-003, -5.162660e-003, -9.305906e-003, -1.680143e-002, -1.933493e-002, -2.737433e-002, -3.069374e-002, -3.127217e-002, -3.124631e-002, -2.918839e-002, -2.051878e-002, -1.103035e-002, -7.936878e-003, -1.395578e-002, -8.998613e-003, 5.784341e-003, 1.742924e-002, 1.037695e-002,


© ISO/IEC 2004 — All rights reserved

Copyright International Organization for Standardization
Provided by IHS under license with ISO
No reproduction or networking permitted without license from IHS
Not for Resale

1.980597e-003, 6.979151e-003, -4.956468e-003, -2.470881e-003, -2.060651e-003, -1.815782e-002, -6.577796e-003, 1.203183e-002, 2.332352e-002, -9.912100e-003, -3.196918e-003, 7.095013e-003, -1.343722e-002, -1.065223e-002, -1.691997e-003, -3.968319e-003, 4.490004e-004, 7.723157e-003, 4.703407e-003, -1.583485e-002, -2.481065e-002, 5.743883e-003, 1.151408e-002, -1.379940e-002, -2.901806e-002, -1.498075e-002, -2.835114e-003, -7.604468e-003, -1.385056e-002, -1.620360e-002, -2.047120e-002, -2.727977e-002, -3.214367e-002, -3.230073e-002, -3.250668e-002, -2.922942e-002, -2.476954e-002, -1.725093e-002, -1.404657e-002, -1.473810e-002, -2.028855e-002, -1.963150e-002, -1.453753e-002, 7.186334e-003, 1.537279e-002, 4.562584e-005, 3.685107e-003, 4.815854e-003, -9.282076e-003, 1.542118e-003, 7.374718e-003, -8.978926e-003, -1.018416e-002, 1.981863e-003, 6.162964e-003, -2.547770e-002, -7.140098e-003, 2.161106e-003, -1.873558e-002, -7.554909e-003, 8.623005e-003, 7.726520e-003, 2.254677e-003, 7.606349e-003, 7.854703e-003, -9.135930e-003, -1.895920e-002, 1.314822e-003, 9.933818e-003, -6.855958e-003, -2.731498e-002, -2.292915e-002, -8.717817e-003, -6.157291e-003, -1.192955e-002, -1.902531e-002, -2.189967e-002, -2.477291e-002, -2.591559e-002, -2.374098e-002, -2.231454e-002, -1.620507e-002, -5.074987e-003, 3.393818e-003, 3.305420e-003, -6.583805e-003, -2.247152e-002, -2.372683e-002, -1.245893e-002, 6.072624e-003, 3.626097e-003, -3.611553e-003, 5.892340e-003, -9.699729e-003, -2.172067e-002, -3.901183e-003, 1.273511e-002, 3.645941e-004, -1.189047e-002, -7.748840e-003, -1.395940e-003, -3.176460e-002, -1.002417e-002, 1.394609e-003, -5.951756e-003, -1.286144e-003, 1.691623e-002, 1.173466e-002, -7.560439e-004, -3.009323e-003, 9.043076e-003, 9.819527e-004, -6.305506e-003, 2.573159e-003, 5.931631e-003, 5.496543e-003, -9.438311e-003, -1.810345e-002, -8.746317e-003, -2.119683e-003, -6.712033e-004, -1.088849e-002, -1.436625e-002, -1.960501e-002, -2.536623e-002, -2.256937e-002, -1.284341e-002, -2.348655e-003, 7.898836e-003, 1.238139e-002, 1.089780e-002, 1.535572e-003, -1.840077e-002, -2.243628e-002, -9.156149e-003, 7.921662e-004, -7.226499e-003, -2.605027e-003, 8.012312e-003, -1.393599e-002, -2.522520e-002, -6.205922e-003, 1.460040e-002, 5.717847e-003, -7.741447e-003, -3.818707e-003, -2.588606e-003, -3.114245e-002, -3.986953e-003, 1.276429e-002, 1.424326e-002, 9.738518e-003, 1.310876e-002, 7.915499e-003, -6.963020e-003, -1.414468e-002, 1.479916e-002, 1.095316e-002, -2.428364e-004, 4.741720e-003, 2.577815e-003, 8.944247e-003, 7.930551e-003, -6.011696e-003, -1.707525e-003, 5.416403e-003, 1.151111e-002, 4.779718e-003, -3.194236e-003, -1.161002e-002, -1.913701e-002, -1.728943e-002, -4.674961e-003, 7.814633e-003, 1.384321e-002, 1.131835e-002, 7.654208e-003, -2.976696e-003, -1.327307e-002, -8.953849e-003, -4.272085e-003, -7.913803e-003, -1.069903e-002, 5.793525e-003, 5.783485e-003, -7.172675e-005, -9.172787e-003, -2.321260e-003, 1.729486e-002, 1.308645e-002, 1.443083e-003, 7.332386e-003, 5.705770e-003, -2.460430e-002, 1.203885e-003, 1.714747e-002, 1.441201e-002, 8.763238e-003, 2.128635e-003, -9.180334e-003, -1.749593e-002, -1.672961e-002, 1.159461e-002, 8.056919e-003, 2.860006e-003, 8.066638e-004, -5.524458e-003, -8.083191e-003, 5.076133e-003, 2.276348e-003, 1.275777e-003, 9.335438e-003, 1.388129e-002, 8.572697e-003, 1.956063e-004, -1.226272e-002, -2.096065e-002, -1.671232e-002, -5.007031e-003, 3.343747e-003, 3.696259e-003, -1.056121e-003, -4.467922e-003, -4.953774e-003, 7.559697e-004, 6.801588e-003, -3.742429e-003, -1.193920e-002, -6.345931e-003, 6.337622e-003, -1.898745e-003, 5.377943e-003, 1.403555e-002, 5.954854e-003, 1.215554e-002, 7.222322e-003, -3.302345e-005, 1.142970e-002, 1.336656e-002, -9.478910e-003, -2.049916e-003, 1.136035e-002, 9.672588e-003, 4.429612e-003, -5.607189e-003, -1.630574e-002, -1.677522e-002, -1.209486e-002, 5.731259e-003, -6.718925e-003, -2.173315e-004, -5.273244e-003, -1.607112e-002, -1.457291e-002, -9.604446e-003, -1.328589e-003, -5.388911e-004, 1.550480e-003, 2.249525e-003, 2.582064e-004, -7.847508e-003, -2.065946e-002, -2.619983e-002, -2.283198e-002, -1.012800e-002, -8.609813e-003, -1.029863e-002, -1.393533e-002, -6.951198e-003, 3.672213e-004, 1.553420e-002, 1.209332e-002, -1.094284e-002, -1.637588e-002, -3.852380e-003, -6.601025e-003, -1.530651e-002, -4.877817e-003, 1.252867e-002, 1.104749e-002, 1.195907e-002, 2.929160e-003, -7.940542e-003, -2.044813e-003, 1.130975e-002, -2.393992e-003, -1.513523e-002, 1.146808e-003, 8.016360e-003, 7.402382e-003, 3.053032e-003, 1.859982e-003, 1.302537e-002, 1.344817e-002, 4.352433e-003, -1.654081e-002, -7.026939e-003, 1.563767e-002, 1.854667e-003, -1.251220e-002, -2.353537e-003, 1.260710e-003, 2.423857e-003, 2.146124e-003, -2.806986e-003, 5.110757e-005, -7.052430e-005, -5.350356e-003, -1.149381e-002, -1.190883e-002, -4.967700e-003, -1.872177e-003, -2.769297e-003, -1.818573e-003, 6.166669e-003, 1.918165e-002, 2.895331e-002, 1.558785e-002, -5.861877e-003, -5.046596e-003, 1.083824e-004, -8.877626e-003, -2.899611e-002, -1.806003e-002, 5.583112e-004, 1.016011e-002, 1.863344e-002, 1.051740e-002, -3.085850e-003, -1.207131e-002, 6.565959e-003, 4.593973e-004, -2.209132e-002, -4.096411e-004, 4.253975e-003, -2.763217e-004, -9.377933e-004, 1.290818e-002, 1.664988e-002, 8.685044e-003, -1.463161e-002, -2.554112e-002, -1.568891e-002, 1.818489e-002, 1.205664e-002, -9.471050e-003, -7.773337e-003, -4.361787e-003, 9.093352e-004, 3.295324e-004, -5.407302e-003, -7.479514e-003, -6.951438e-003, -7.237056e-003, -8.318440e-003, -1.212048e-002, -1.085414e-002, -3.783767e-003, 2.636510e-004, 4.988107e-003, 2.977229e-003, 1.605602e-002, 1.491763e-002, 4.178684e-003, -4.267149e-003, 1.192157e-004, 5.392962e-003, -1.031415e-003, -2.707555e-002, -2.429347e-002, -1.793815e-002, -1.648979e-002, 1.820671e-003, -4.174321e-003, -9.468251e-003, -1.339728e-002, -4.266790e-003, -8.227374e-004, -2.938066e-002, -3.944193e-003, 8.329891e-003, 7.311256e-004, 6.044936e-003, 1.516890e-002,

© ISO/IEC 2004 — All rights reserved


Copyright International Organization for Standardization
Provided by IHS under license with ISO
No reproduction or networking permitted without license from IHS
Not for Resale

1.890511e-002, 1.268627e-002, -8.021573e-003, -1.780372e-002, -9.970865e-003, 1.622963e-002, 1.371986e-002, -7.978461e-003, -1.598057e-002, -1.533980e-002, -3.570431e-003, 3.915006e-003, -2.886217e-003, -5.251703e-003, -7.231494e-003, -1.017605e-002, -1.203029e-002, -1.362636e-002, -1.133380e-002, -7.018876e-003, -4.489952e-003, -1.509503e-003, 3.737016e-003, 6.346558e-003, 2.832592e-003, -3.313273e-003, -3.563955e-003, 2.679721e-003, 1.614449e-002, 1.868072e-002, -2.476378e-003, -6.455680e-003, 3.226460e-003, -1.812003e-002, -4.691956e-003, -4.856917e-003, -1.622075e-002, -5.903175e-003, -3.605703e-003, -3.971823e-003, -3.782241e-002, -1.112422e-002, 8.162323e-003, 6.289905e-004, -5.849893e-004, -2.921780e-003, -1.119425e-003, 4.441975e-003, 2.748018e-004, -7.322422e-003, -2.572217e-003, 6.253112e-003, 4.303373e-003, -1.232913e-002, -1.756094e-002, -1.620289e-002, -4.861893e-003, 8.491267e-003, 8.071017e-003, 4.930381e-003, -5.259251e-004, -3.204966e-003, -3.150416e-003, 9.619941e-006, 2.423231e-004, -8.926915e-004, -2.137535e-003, -2.102400e-003, -9.926574e-004, 2.073874e-004, -9.374147e-004, -4.867796e-003, -9.655639e-003, 3.360967e-003, 1.272819e-002, 1.547215e-002, 7.753630e-003, 1.472610e-002, 2.396300e-002, 6.061848e-003, 6.785197e-003, 5.923256e-003, -4.787136e-003, -2.556249e-003, -3.498732e-003, -1.070736e-002, -3.631695e-002, -4.961249e-003, 1.923036e-002, -5.398510e-003, -2.463386e-002, -2.535147e-002, -9.597325e-003, -3.276802e-004, 2.119231e-003, 2.247974e-003, -1.029694e-002, -1.727372e-002, -1.342714e-002, -2.140199e-002, -1.884199e-002, -1.744120e-002, -1.120928e-002, 5.514945e-003, 1.184259e-002, 7.773466e-003, -3.994225e-004, -3.646978e-003, -3.128091e-003, -5.930093e-004, -1.918176e-003, -3.635521e-003, -8.674650e-003, -1.094107e-002, -1.134140e-002, -5.599523e-003, -3.918306e-003, -1.747409e-002, -2.653769e-002, -1.283128e-002, -2.194069e-003, 8.611171e-004, -4.973062e-003, 9.793866e-003, 1.797511e-002, 3.648566e-003, -1.358763e-003, 5.252642e-003, 4.697506e-003, 4.571214e-003, -3.447039e-003, -1.516204e-002, -1.417291e-002, 1.315751e-002, 2.202909e-002, 1.024985e-002, 4.644614e-004, -4.135070e-004, 6.111440e-003, 1.179031e-002, 1.763782e-002, 2.415557e-002, 1.243660e-002, -1.386653e-003, 2.522680e-003, 2.091872e-003, 5.859137e-003, 2.070608e-003, -3.544662e-003, 5.871265e-004, 6.981166e-003, 5.349969e-003, 8.610284e-004, -4.402983e-003, -5.644473e-003, -4.643002e-003, -4.034275e-003, -7.893650e-003, -8.575671e-003, -8.742486e-003, -1.971098e-003, 7.375742e-003, 4.073342e-003, -1.388717e-002, -2.597613e-002, -1.796954e-002, -6.350841e-003, -3.937984e-003, -2.878935e-002, -2.070727e-002, -8.927099e-003, -1.237669e-002, -1.347917e-002, -1.614911e-002, -1.125267e-002, -4.385661e-003, 2.510979e-003, -4.485913e-003, -1.298689e-002, -1.140475e-003, -2.322929e-003, -1.579365e-002, -2.575346e-002, -2.540017e-002, -1.913263e-002, -1.389840e-002, -5.816802e-003, 1.697203e-003, 5.138315e-003, -2.895577e-003, -5.398326e-003, 2.602445e-003, 1.427104e-002, 1.587332e-002, 1.325242e-002, 1.305233e-002, 1.814016e-002, 2.228070e-002, 2.251060e-002, 1.765290e-002, 1.727262e-002, 1.818224e-002, 1.924037e-002, 1.920694e-002, 2.071601e-002, 2.193770e-002, 2.891178e-002, 3.473844e-002, 3.229341e-002, 2.102608e-002, 2.039017e-002, 3.686096e-002, 4.432509e-002, 3.469516e-002, 2.236697e-003, -6.003256e-003, -7.055954e-003, -1.420112e-002, -1.148430e-002, -1.590636e-002, -1.522359e-002, -2.453849e-002, -2.060599e-002, -1.593899e-002},
{-6.222568e-003, 2.903552e-003, 1.929523e-002, 2.550452e-002, 1.220510e-002, -5.600140e-003, -2.373453e-002, -2.979769e-002, -2.591679e-002, -1.642517e-002, 3.043559e-003, 1.703410e-002, 2.463212e-002, 2.166594e-002, 1.018990e-002, -6.038522e-003, -1.841883e-002, -2.068544e-002, -1.427409e-002, -6.000634e-003, 1.961325e-003, 7.768734e-003, 7.940742e-003, 6.966580e-003, 3.723472e-003, -2.601348e-003, -4.581731e-003, -2.395774e-003, -4.501666e-003, -4.599361e-003, -9.869040e-003, -1.058263e-002, -5.366466e-003, -6.508045e-004, -8.502034e-003, -2.109847e-002, -1.550735e-002, -1.868284e-003, 1.470234e-002, 1.842487e-002, 1.353670e-002, 2.526830e-002, 3.817246e-002, 1.158931e-002, -2.110361e-002, -4.704148e-002, -1.457035e-002, -3.222065e-003, 1.790221e-002, 1.901733e-002, 1.140962e-002, -2.347372e-003, -4.639880e-003, -2.487190e-005, -8.945482e-003, -4.025574e-003, 4.220513e-003, 8.846847e-003, 1.134274e-002, 5.058449e-003, -2.733124e-003, -8.170437e-003, -1.274969e-002, -1.343557e-002, -9.955247e-003, -1.132159e-003, 1.031674e-002, 1.287366e-002, 1.016142e-002, 6.726272e-003, 6.738399e-003, 2.663281e-003, -2.163275e-003, -5.026323e-003, -2.752617e-003, 1.988593e-003, 6.308468e-003, 1.773685e-003, -1.920935e-003, -2.923910e-003, 2.090320e-003, -3.002430e-003, -8.862041e-003, -5.293256e-003, 3.492764e-003, 1.293775e-002, 1.623451e-003, -3.512746e-003, 1.609375e-002, 2.581028e-002, -1.314114e-002, -4.599439e-002, -7.007414e-003, 5.855850e-003, 2.491163e-002, 2.675316e-002, 1.866802e-002, 1.771307e-002, 2.405633e-002, 1.394014e-002, 1.096124e-003, -8.835196e-004, -1.209417e-004, 5.388537e-003, 5.784021e-003, 4.708189e-003, 3.482767e-003, 3.388285e-003, -3.651586e-003, -7.519680e-003, -1.187538e-002, -1.159688e-002, -1.152266e-002, -9.496359e-003, -9.705569e-003, -1.201911e-002, -1.009388e-002, -1.557322e-002, -1.755694e-002, -1.815521e-002, -1.308837e-002, -7.608103e-003, 1.689571e-003, 1.293908e-002, 1.240273e-002, 2.562592e-003, -2.090469e-003, 1.138228e-002, 1.406513e-002, 5.056488e-003, 6.415031e-003, 1.724342e-002, 1.027579e-002, -1.422490e-002, -1.953216e-002, 5.718272e-003, -1.052300e-002, -3.700644e-002, -5.352613e-004, 1.132243e-002, 2.926483e-002, 2.392221e-002, 2.283281e-002, 2.901143e-002, 3.737653e-002, 1.302521e-002, -3.748475e-003, -8.191324e-003, 7.258226e-003, 1.512900e-002, 1.575287e-002, 1.691546e-002, 1.388216e-002, 1.091642e-002, 5.937937e-003, -1.112395e-003, -7.974265e-003, -1.121996e-002, -1.603918e-002, -2.050410e-002, -


© ISO/IEC 2004 — All rights reserved

Copyright International Organization for Standardization
Provided by IHS under license with ISO
No reproduction or networking permitted without license from IHS
Not for Resale

2.091411e-002, -1.605950e-002, -1.637966e-002, -1.727924e-002, -1.425130e-002, -1.407632e-002, -1.305085e-002, -7.586941e-003, -3.394887e-003, 3.529775e-003, 1.143137e-002, 1.353914e-002, 6.185977e-003, -5.576596e-004, 1.887349e-002, 2.270737e-002, 1.622597e-002, 2.293709e-002, 2.874320e-002, 6.689145e-004, -2.673266e-002, -1.207170e-002, -8.433894e-003, -2.303432e-002, -4.860139e-002, -3.888547e-002, -2.448435e-002, -2.583514e-002, -2.047637e-002, 7.795660e-003, 4.047684e-003, -2.056354e-002, -2.465622e-002, -8.899426e-003, 9.408732e-003, 1.518222e-002, 1.676779e-002, 1.766347e-002, 1.312709e-002, 1.185981e-002, 9.961529e-003, 8.244729e-004, -6.735639e-003, -1.242548e-002, -1.792117e-002, -2.239705e-002, -2.637976e-002, -2.127117e-002, -1.818144e-002, -1.793970e-002, -1.193715e-002, -1.105114e-002, -8.609388e-003, -5.795463e-003, -5.576995e-003, -6.006665e-003, -6.797116e-003, 6.058225e-004, 7.457732e-003, -1.490429e-003, -6.670273e-003, 6.182288e-003, 4.033355e-003, 3.305167e-003, 1.104218e-002, -9.609366e-003, -1.850378e-002, -2.125673e-002, -1.120942e-002, -1.226616e-002, -4.121630e-002, -3.004621e-002, -2.109570e-002, -3.011392e-002, -1.887622e-002, 4.909872e-003, -1.091219e-002, -1.736369e-002, -4.420471e-003, 4.500280e-003, 8.956968e-003, 1.027341e-002, 1.238514e-002, 1.511186e-002, 1.695229e-002, 1.763742e-002, 1.137722e-002, -1.578882e-003, -9.002560e-003, -1.342804e-002, -1.657838e-002, -2.145896e-002, -2.859732e-002, -2.470989e-002, -1.858453e-002, -9.120862e-003, -1.164905e-003, 3.907642e-003, 5.981963e-003, 3.811542e-003, 1.671162e-003, -4.541229e-003, -1.018475e-002, -7.880472e-003, 5.720153e-003, 8.183136e-003, -8.896785e-003, -7.514927e-003, -4.812559e-003, -2.762639e-003, -8.886771e-004, -5.928833e-005, -9.584269e-003, -2.509581e-002, -1.363897e-002, -6.711303e-003, -2.775187e-002, -2.453368e-002, -2.115669e-002, -2.809315e-002, -9.153836e-003, 1.541506e-003, -1.322010e-002, 1.561816e-004, 3.856855e-003, 2.444006e-005, -5.196384e-004, -7.699391e-004, 8.735233e-003, 1.489421e-002, 1.717460e-002, 1.427856e-002, 6.759755e-003, -4.832538e-003, -1.225743e-002, -1.790062e-002, -2.145549e-002, -2.420767e-002, -2.582834e-002, -2.326958e-002, -1.406339e-002, -1.460145e-003, 7.499565e-003, 1.530444e-002, 2.351332e-002, 2.300976e-002, 1.541096e-002, 1.122139e-002, -3.405101e-003, -9.627160e-003, -2.234612e-004, 7.850221e-003, 5.268468e-003, -6.463283e-003, -8.902693e-003, -7.536967e-003, -5.591164e-003, 5.579054e-003, -1.727664e-002, -2.014020e-002, -9.451723e-003, 4.713373e-003, -1.775406e-002, -1.864738e-002, -1.809845e-002, -2.206002e-002, -7.898379e-003, -2.586986e-003, -3.187997e-003, 8.405485e-003, -3.131200e-003, -5.787664e-003, -7.242864e-003, -4.864830e-003, 3.122833e-003, 1.230424e-002, 1.900396e-002, 1.259232e-002, 7.858615e-004, -8.824993e-003, -1.838298e-002, -2.168566e-002, -2.195833e-002, -1.976614e-002, -1.773774e-002, -1.561295e-002, -1.221467e-002, -3.264527e-003, 4.021278e-003, 9.377968e-003, 1.786514e-002, 2.113080e-002, 1.862820e-002, 1.704391e-002, 1.044476e-002, -6.995503e-004, -3.435786e-005, 1.097012e-002, 8.774549e-003, 1.217545e-003, -6.249654e-003, -1.508657e-002, -1.826240e-002, 8.536919e-005, -2.122869e-003, -1.394851e-002, -1.346599e-002, 5.938957e-003, -7.780615e-003, -1.378304e-002, -1.574584e-002, -1.782541e-002, -2.982822e-003, -3.519107e-003, 1.245809e-003, 5.226698e-004, -8.739257e-003, -7.128751e-003, -1.033795e-002, -7.542862e-003, 2.748782e-003, 1.440493e-002, 1.573046e-002, 7.612815e-003, -7.047725e-003, -1.727885e-002, -2.242387e-002, -2.132838e-002, -1.567129e-002, -7.301045e-003, -2.508886e-003, -4.330166e-003, -7.929403e-003, -3.842791e-003, -3.422669e-003, -5.270736e-004, 3.586165e-003, 3.408703e-003, 7.005122e-004, 8.538747e-004, 9.394432e-003, 7.415703e-003, 1.949213e-003, 4.236682e-003, 1.077781e-002, 6.324380e-003, -7.079195e-003, -1.132523e-002, -2.472816e-002, -1.615943e-002, -4.341189e-003, -9.999966e-003, -1.365441e-002, 1.151254e-002, 1.366838e-003, -6.811568e-003, -1.535647e-002, -9.963585e-003, -3.703082e-004, -4.146942e-003, -4.772307e-003, -1.055856e-002, -6.886239e-003, -1.077048e-002, -1.042594e-002, -1.417620e-003, 1.212826e-002, 1.539336e-002, 1.157284e-002, -3.784140e-004, -9.763896e-003, -1.570967e-002, -1.550522e-002, -7.207060e-003, 2.966784e-003, 1.202111e-002, 1.553377e-002, 1.402060e-002, 1.250065e-002, 1.244025e-002, 1.136790e-002, 5.707639e-003, 3.651316e-003, -6.209383e-004, -5.260418e-003, -1.166521e-002, -3.151631e-003, 1.125657e-002, 1.577109e-002, 1.679044e-003, 3.663429e-003, 9.622239e-003, -1.730100e-003, -7.920249e-003, -1.624373e-002, -1.933855e-002, -1.160532e-002, -3.859604e-003, -1.134074e-002, 8.022306e-003, 9.359489e-003, 9.309132e-003, -1.019997e-002, 4.003421e-003, -2.563147e-003, -1.561151e-002, -1.588375e-002, -7.986632e-003, -4.061108e-003, -1.307303e-002, -8.143064e-003, 6.866868e-003, 2.012282e-002, 1.593670e-002, 3.518645e-003, -1.079209e-002, -1.293058e-002, -4.965827e-003, 3.408773e-003, 1.091770e-002, 1.896177e-002, 2.365490e-002, 2.541432e-002, 3.042928e-002, 3.423711e-002, 3.580428e-002, 3.531973e-002, 2.839847e-002, 2.308194e-002, 1.861448e-002, 4.959003e-003, -1.082131e-002, -1.613791e-002, -2.792441e-003, 1.252073e-002, 7.560384e-003, -5.313989e-003, -1.085400e-003, -3.885295e-003, -5.556960e-003, -3.476317e-003, -1.044051e-002, -1.138792e-002, 3.787929e-003, -5.555371e-003, 5.399723e-003, 1.391305e-002, 9.052462e-003, -4.037308e-003, 8.465163e-003, -1.789397e-003, -2.308280e-002, -1.810514e-002, -8.457311e-004, -5.329585e-003, -1.502525e-002, -5.089778e-003, 1.000024e-002, 1.776951e-002, 7.687859e-003, -8.106735e-003, -1.673910e-002, -1.004169e-002, 1.922575e-003, 1.064872e-002, 2.097836e-002, 2.903917e-002, 3.000410e-002, 3.065483e-002, 3.896047e-002, 4.510794e-002, 5.510839e-002, 5.460970e-002, 4.717853e-002, 4.062735e-002, 3.416447e-002, 1.748665e-002, -4.472259e-003, -1.935922e-002, -1.646816e-002, 1.578928e-003, 4.961771e-003, -9.771204e-003, -1.039362e-002, -

© ISO/IEC 2004 — All rights reserved


Copyright International Organization for Standardization
Provided by IHS under license with ISO
No reproduction or networking permitted without license from IHS
Not for Resale

1.345587e-002, -1.126606e-002, -5.356580e-003, -7.387284e-003, -5.454902e-003, 7.316563e-003, -1.420297e-003, 5.834582e-003, 1.571791e-002, 9.491446e-003, 1.406828e-003, 5.636180e-003, -9.545709e-003, -2.208029e-002, -9.188771e-003, 1.990626e-003, -7.708387e-003, -1.812633e-002, -4.516001e-003, 8.584567e-003, 5.388200e-003, -6.030684e-003, -2.067572e-002, -2.110727e-002, -1.185960e-002, -6.409224e-004, 1.110492e-002, 1.822323e-002, 2.368524e-002, 2.395142e-002, 2.700523e-002, 3.496716e-002, 4.446107e-002, 5.319662e-002, 5.745867e-002, 5.210045e-002, 4.576794e-002, 3.701480e-002, 2.443813e-002, 5.021704e-003, -1.537321e-002, -2.167632e-002, -9.962522e-003, -1.213595e-003, -1.190056e-002, -2.050827e-002, -1.892980e-002, -1.674200e-002, -4.825514e-003, -1.320035e-003, -2.425382e-003, 8.926242e-003, 7.318579e-004, 5.291090e-003, 1.584500e-002, 9.648851e-003, 1.850406e-003, 7.287169e-003, -1.412317e-002, -1.049772e-002, -2.507568e-003, 4.473119e-003, -8.941391e-003, -2.226596e-002, -2.720192e-003, 8.543002e-003, -4.948916e-003, -1.559518e-002, -2.400865e-002, -2.075411e-002, -1.294664e-002, -3.888658e-003, 2.606876e-003, 6.358497e-003, 6.937582e-003, 3.802108e-003, 5.755355e-003, 1.128565e-002, 2.402719e-002, 3.554033e-002, 4.336461e-002, 4.332069e-002, 3.733420e-002, 2.923072e-002, 1.565596e-002, 4.859065e-003, -1.621038e-002, -2.738152e-002, -2.339299e-002, -9.061654e-003, -1.632811e-002, -2.369534e-002, -2.277158e-002, -2.070223e-002, -7.759229e-003, -1.290776e-003, 1.145043e-003, 1.075238e-002, 3.391348e-003, 6.015738e-003, 1.409923e-002, 1.345032e-002, 4.722854e-003, 3.408281e-003, -1.295128e-002, 7.685840e-003, 5.209957e-003, 2.267240e-003, -1.509813e-002, -2.243853e-002, -9.960542e-004, 1.535256e-003, -1.309343e-002, -2.360671e-002, -2.453611e-002, -1.938908e-002, -1.361639e-002, -6.146335e-003, -3.473782e-003, -4.817158e-003, -7.314820e-003, -1.402510e-002, -1.056380e-002, -7.797827e-003, 3.148482e-003, 1.184173e-002, 1.763699e-002, 1.662479e-002, 1.477257e-002, 1.289208e-002, 9.533756e-004, -6.093772e-003, -1.593703e-002, -2.903784e-002, -2.569413e-002, -1.786265e-002, -2.117837e-002, -2.307340e-002, -1.965131e-002, -2.353734e-002, -1.287598e-002, -6.544784e-003, -1.898344e-003, 1.579912e-003, 1.862700e-003, -1.218071e-003, 1.040756e-002, 1.124976e-002, 3.882461e-003, 8.040164e-004, -5.653624e-003, 1.981795e-002, 9.102828e-003, -3.543724e-003, -2.037476e-002, -2.280649e-002, 1.646053e-003, -5.882952e-004, -1.628712e-002, -2.568177e-002, -2.420848e-002, -1.883613e-002, -1.006949e-002, -6.287477e-003, -7.321948e-003, -1.444636e-002, -2.205770e-002, -2.471824e-002, -2.061439e-002, -1.677123e-002, -1.131076e-002, -3.083706e-003, -3.133987e-004, -1.008278e-003, -2.382152e-003, -2.022431e-003, -6.581302e-003, -1.238193e-002, -1.891949e-002, -2.678096e-002, -2.220760e-002, -1.516140e-002, -2.284483e-002, -2.284946e-002, -1.182754e-002, -2.297324e-002, -1.547860e-002, -1.286068e-002, -4.556622e-003, -1.842306e-004, 7.620933e-004, -1.013684e-002, 1.045730e-002, 1.373514e-002, 7.243968e-003, 8.820076e-003, 6.890865e-003, 2.701749e-002, 6.997324e-003, -8.116000e-003, -1.929024e-002, -1.992324e-002, 4.992627e-004, -4.217386e-003, -1.480839e-002, -2.421195e-002, -1.756054e-002, -5.831608e-003, 4.659061e-003, 8.056766e-003, -5.214767e-004, -1.306345e-002, -2.337065e-002, -2.421146e-002, -2.163802e-002, -1.789257e-002, -1.183163e-002, -2.573472e-003, 1.714640e-003, 3.548163e-003, 4.681581e-003, 4.485665e-003, 3.773825e-003, -5.860824e-003, -1.338614e-002, -1.791352e-002, -1.433532e-002, -5.888208e-003, -1.245725e-002, -1.744872e-002, -3.349813e-003, -1.362825e-002, -1.383020e-002, -1.092762e-002, -6.754466e-003, 4.418272e-003, 2.360823e-003, -1.107938e-002, 7.119537e-003, 2.047386e-002, 1.509996e-002, 2.157755e-002, 1.756997e-002, 2.967970e-002, 3.021559e-003, -1.067743e-002, -1.111241e-002, -1.533356e-002, -7.492409e-003, -2.084055e-002, -3.036597e-002, -3.206191e-002, -1.985600e-002, 1.674733e-003, 1.723083e-002, 2.395696e-002, 1.821733e-002, 3.640717e-003, -8.183811e-003, -1.039660e-002, -1.060469e-002, -7.923488e-003, -1.151241e-003, 1.314595e-002, 2.072872e-002, 2.154904e-002, 2.063688e-002, 1.798347e-002, 1.066998e-002, -2.789097e-004, -1.188342e-002, -2.022613e-002, -1.285492e-002, 1.385759e-004, 4.994040e-003, -1.377389e-003, 6.174570e-003, 1.282292e-003, -2.918674e-003, 4.996223e-004, -1.973336e-003, 7.718388e-003, 3.804741e-003, -8.377130e-003, -4.151608e-005, 1.650829e-002, 1.778325e-002, 3.085323e-002, 2.139333e-002, 2.136444e-002, -1.739692e-003, -6.554861e-003, -1.717546e-003, -7.581807e-003, -2.012695e-002, -4.527284e-002, -5.491796e-002, -4.573899e-002, -3.213021e-002, -1.101395e-002, 8.809477e-003, 2.379328e-002, 3.462297e-002, 2.523378e-002, 1.140739e-002, 8.563796e-003, 9.348707e-003, 1.081677e-002, 1.839737e-002, 3.339664e-002, 3.960018e-002, 3.952833e-002, 2.933916e-002, 1.529699e-002, -3.352288e-003, -1.693328e-002, -3.218969e-002, -4.293215e-002, -3.803140e-002, -9.889701e-003, 1.124438e-002, 1.515624e-002, 1.342524e-002, 1.262179e-002, 1.136075e-002, 1.312795e-002, 9.944107e-003, 9.406487e-003, 1.002421e-003, -4.804825e-003, -9.525924e-003, 6.926203e-003, 1.312928e-002, 3.315987e-002, 1.512133e-002, 7.866865e-003, -6.651501e-003, 9.821418e-004, 1.338486e-002, 8.571320e-004, -2.748607e-002, -3.852048e-002, -2.690487e-002, -5.889145e-003, 1.319218e-003, 5.884284e-003, 1.545612e-002, 2.376897e-002, 3.302509e-002, 2.817560e-002, 1.606163e-002, 1.073637e-002, 7.460933e-003, 7.771602e-003, 1.935368e-002, 2.812160e-002, 2.564015e-002, 2.399941e-002, 1.585432e-002, 1.431201e-002, 1.311886e-002, 8.876626e-003, 2.191326e-003, -1.340230e-002, -2.894272e-002, -2.357710e-002, 3.846865e-003, 1.847518e-002, 1.661069e-002, 1.932968e-002, 2.430097e-002, 1.878830e-002, 1.481285e-002, 1.157625e-002, 5.754124e-004, -4.415881e-003, -1.953385e-002, -7.017620e-003, -6.725625e-003, 2.269545e-002, 1.012505e-003, -9.426838e-003, -8.388913e-003, 4.513285e-003,


© ISO/IEC 2004 — All rights reserved

Copyright International Organization for Standardization
Provided by IHS under license with ISO
No reproduction or networking permitted without license from IHS
Not for Resale

2.643959e-002, 6.345168e-003, -9.319678e-003, -3.255181e-003, 1.446103e-002, 1.565754e-002, 7.712480e-003, 5.339422e-004, -4.349229e-003, -2.293575e-003, -3.061424e-003, -2.040754e-003, 6.378484e-004, 3.859521e-003, 4.076872e-003, 4.787640e-003, 1.023092e-002, 8.651314e-003, -8.580241e-003, -1.288815e-002, -1.455701e-002, -9.103256e-003, -3.213701e-003, -1.759479e-003, -4.414920e-003, -1.174207e-002, -2.474838e-002, -2.625636e-002, -9.408117e-003, 7.373287e-003, 8.223594e-003, 2.046642e-002, 2.478066e-002, 1.865677e-002, 1.541214e-002, 6.654989e-003, 2.988107e-003, -3.267276e-003, 6.106464e-003, -1.652177e-002, -2.106852e-002, 9.116085e-003, -1.191368e-002, -2.749581e-002, -8.110579e-003, 1.578994e-002, 3.276707e-002, 1.559304e-002, 4.515913e-003, 1.528303e-002, 1.398735e-002, -5.407962e-003, -1.673944e-002, -2.115006e-002, -9.494733e-003, 9.212561e-003, 1.732778e-002, 1.354631e-002, 1.166214e-002, 2.551603e-002, 2.521974e-002, 2.955813e-002, 1.973787e-002, 1.499916e-002, 1.066297e-002, 2.428293e-003, 1.496600e-003, 3.845894e-003, -3.240178e-003, -1.275371e-002, -1.991319e-002, -2.317217e-002, -2.015479e-002, -8.544248e-003, 1.442655e-003, 5.874400e-003, 5.503611e-003, 1.675354e-002, 1.734168e-002, 9.746371e-003, 1.656110e-002, 6.808845e-003, 3.538490e-003, 9.011270e-004, 9.507459e-003, -1.640203e-002, -2.917476e-002, -8.133380e-003, -1.867977e-002, -2.842796e-002, 4.484438e-003, 2.471523e-002, 2.617631e-002, 9.209374e-003, 5.420581e-003, 1.169087e-002, -1.651913e-002, -3.390913e-002, -1.686390e-002, -5.171463e-003, 9.288599e-004, 9.837922e-003, 3.536961e-002, 5.106615e-002, 5.171627e-002, 5.977730e-002, 6.436596e-002, 5.464854e-002, 4.111912e-002, 4.424095e-002, 5.800111e-002, 3.918135e-002, 1.323326e-002, -6.116407e-003, -1.847467e-002, -3.329640e-002, -4.662856e-002, -4.856914e-002, -3.172574e-002, 5.367700e-003, 2.842348e-002, 1.971686e-002, -7.706844e-004, 1.127050e-002, 2.943728e-003, 9.466631e-004, 1.562816e-002, 1.007551e-002, -6.481899e-003, 1.205676e-002, 1.447969e-002, -6.471749e-003, -2.109377e-002, -8.553158e-003, -1.412106e-002, -2.045716e-002, 1.779650e-002, 3.028188e-002, 3.006049e-002, 1.153466e-002, 2.775731e-003, -2.276155e-003, -1.694488e-002, -2.176995e-002, -2.134152e-003, -2.179246e-003, -3.344870e-002, -7.328244e-002, -2.031963e-002, 4.687845e-002, 6.190696e-002, 6.972672e-002, 9.039645e-002, 7.707167e-002, 6.398728e-002, 6.787892e-002, 7.183834e-002, 2.456634e-002, -4.278694e-002, -5.849003e-002, -1.277617e-002, -2.805103e-004, -4.375929e-002, -5.459657e-002, -2.481029e-002, 3.628951e-003, 3.726005e-002, 4.038406e-002, 1.360204e-002, 1.080912e-002, -8.915517e-003, -1.275953e-002, 1.119791e-002, 9.693119e-003, -4.480213e-003, 2.236567e-002, 1.971625e-002, 1.064911e-002, -3.213371e-003, 6.016055e-003, 9.517617e-004, -2.707581e-003, 2.858110e-002, 3.379907e-002, 2.709277e-002, 1.427251e-002, 1.342547e-002, 1.862808e-002, 1.605865e-002, -1.837446e-002, -3.113419e-002, -1.088768e-002, -3.984743e-002, -7.627454e-002, -3.987552e-002, 2.978620e-002, 4.012995e-002, 5.689877e-002, 7.929846e-002, 7.272844e-002, 5.212715e-002, 5.239078e-002, 4.807528e-002, 3.654517e-003, -6.385889e-002, -7.482580e-002, -2.264714e-002, -6.359778e-003, -3.545057e-002, -3.079703e-003, 1.564759e-002, 1.923700e-002, 3.563523e-002, 4.660357e-002, 2.847343e-002, 7.777339e-003, -1.207110e-002, -1.186394e-002, 1.104855e-002, 1.107073e-002, 6.534520e-003, 3.788332e-002, 2.320318e-002, 2.759787e-002, 5.407421e-003, 1.573489e-002, 8.400816e-003, 2.890396e-003, 2.175336e-002, 1.808654e-002, 7.401281e-003, 7.310598e-004, 1.698494e-002, 3.446603e-002, 3.195432e-002, 2.169125e-002, 7.328770e-003, -1.524997e-003, -1.981806e-002, -1.766274e-002, 4.109513e-003, 2.646348e-002, 2.331558e-002, 3.520252e-002, 5.296303e-002, 5.692103e-002, 3.772324e-002, 3.016437e-002, 2.298865e-002, 6.127030e-003, -2.765542e-002, -3.537559e-002, -4.780581e-003, 1.861283e-002, 2.268317e-002, 3.812699e-002, 3.780179e-002, 3.635917e-002, 3.685244e-002, 4.028209e-002, 2.372800e-002, 2.382634e-003, 9.777377e-004, 4.076482e-003, 1.796593e-002, 1.516381e-002, 1.821286e-002, 4.713454e-002, 2.611410e-002, 3.238129e-002, 7.395659e-003, 1.658177e-002, 9.781503e-003, 8.323949e-003, 1.621447e-002, 4.267481e-003, 8.016176e-004, -6.463377e-004, 6.172027e-003, 7.423395e-003, 5.726115e-003, -6.102172e-003, -2.397617e-002, -4.154496e-002, -5.167667e-002, -3.833105e-002, -6.588682e-003, 1.071118e-002, 8.367880e-003, 1.663666e-002, 3.277282e-002, 3.831919e-002, 2.907589e-002, 1.921882e-002, 1.287162e-002, -2.257800e-003, -3.640166e-002, -5.342419e-002, -4.269981e-002, -2.098474e-002, -4.918367e-003, 1.126530e-002, 1.456052e-002, 2.246716e-002, 2.559183e-002, 2.795959e-002, 2.289916e-002, 1.766077e-003, 1.440037e-002, 1.065167e-002, 1.631421e-002, 2.106833e-002, 1.946849e-002, 5.239513e-002, 2.189008e-002, 2.715313e-002, 7.301063e-004, 8.817395e-003, 5.287536e-003, 1.196321e-002, 9.691466e-003, -5.286615e-003, 4.662285e-003, 2.894867e-003, -7.032218e-003, -9.249774e-003, -1.248378e-002, -2.829917e-002, -5.321607e-002, -6.933150e-002, -6.524111e-002, -4.383218e-002, -2.537901e-002, -1.256634e-002, -2.280863e-003, -3.150396e-003, 8.191677e-003, 6.606488e-003, 6.083790e-003, 1.115527e-002, 4.041898e-003, -2.384696e-002, -5.001927e-002, -7.047712e-002, -7.709129e-002, -6.598072e-002, -4.332683e-002, -1.389084e-002, -6.747617e-003, 2.554201e-003, 1.323785e-002, 1.849959e-002, 2.033637e-002, 5.741431e-003, 2.518445e-002, 2.163994e-002, 1.149882e-002, 4.935895e-003, 1.320402e-002, 5.166124e-002, 1.067175e-002, 9.838976e-003, -1.508948e-002, -5.846272e-003, -3.648591e-003, 1.576127e-002, 4.250428e-003, -1.184031e-002, 1.133675e-002, 1.260938e-002, -2.013886e-003, -6.092887e-003, -1.417647e-002, -3.179432e-002, -5.202229e-002, -6.204696e-002, -5.437445e-002, -4.303782e-002, -2.811820e-002, -5.532972e-003, -1.121891e-002, -2.741990e-002, -2.280553e-002, -2.837686e-002, -

© ISO/IEC 2004 — All rights reserved


Copyright International Organization for Standardization
Provided by IHS under license with ISO
No reproduction or networking permitted without license from IHS
Not for Resale

3.067990e-002, -7.802789e-003, 6.028415e-003, -1.042321e-002, -5.187848e-002, -6.972905e-002, -7.697559e-002, -6.790525e-002, -4.698553e-002, -2.191502e-002, -1.422516e-002, -5.475017e-003, 6.141349e-003, 1.497884e-002, 2.039779e-002, 8.774542e-003, 2.698295e-002, 2.244398e-002, 2.443513e-003, -6.621734e-003, 6.868525e-003, 4.628713e-002, 1.540180e-003, -2.175229e-002, -2.834437e-002, -1.455380e-002, -4.559873e-003, 1.097020e-002, -4.902892e-003, -1.390895e-002, 1.583751e-002, 1.906972e-002, 1.212302e-002, 1.522994e-002, 7.995868e-003, -4.392547e-003, -1.785766e-002, -2.330646e-002, -1.593852e-002, -3.414775e-003, 9.040845e-003, -5.639501e-003, -3.730188e-002, -4.973706e-002, -4.545562e-002, -5.064506e-002, -5.889071e-002, -4.038159e-002, -3.847069e-003, 1.313496e-002, 9.842428e-004, -3.355104e-002, -4.574596e-002, -4.237920e-002, -2.649269e-002, -5.262485e-003, 3.240699e-003, 1.173967e-003, 4.454884e-003, 9.121349e-003, 1.688597e-002, 2.345549e-003, 1.662715e-002, 2.328963e-002, -4.402171e-004, -8.673082e-003, -5.642416e-005, 3.729424e-002, 3.482400e-002, -2.802249e-002, -2.915830e-002, -1.155215e-002, -3.933904e-003, 6.713627e-003, -6.529015e-003, -1.091219e-002, 1.549106e-002, 2.346565e-002, 1.750480e-002, 2.923141e-002, 3.872445e-002, 4.054384e-002, 3.588182e-002, 3.604697e-002, 4.270031e-002, 4.179553e-002, 4.788099e-003, -3.713190e-002, -6.173572e-002, -6.137150e-002, -5.727808e-002, -6.187414e-002, -6.763315e-002, -5.938231e-002, -2.680907e-002, 2.526950e-003, 2.295674e-002, 1.671569e-002, 8.078741e-003, 6.739448e-003, 1.478678e-002, 2.711429e-002, 2.547482e-002, 7.660646e-003, 2.195929e-003, 1.322046e-003, 1.140090e-002, -3.913781e-003, 4.858679e-003, 1.543329e-002, -5.070415e-003, -5.449348e-003, -6.490080e-003, 1.975852e-002, 3.211642e-002, -1.907938e-002, -1.596115e-002, 5.863107e-003, 1.064608e-003, 3.227186e-003, -9.998424e-003, -6.530571e-003, 1.516471e-002, 2.183236e-002, 1.542526e-002, 2.941543e-002, 4.969944e-002, 5.903496e-002, 6.193451e-002, 5.887111e-002, 5.152426e-002, 1.989718e-002, -3.120238e-002, -5.747543e-002, -6.056590e-002, -5.326234e-002, -5.930022e-002, -6.357391e-002, -6.219708e-002, -5.476539e-002, -3.223049e-002, -3.210862e-002, -9.479409e-003, 1.743875e-002, 2.715013e-002, 3.426730e-002, 4.233748e-002, 4.279326e-002, 2.677222e-002, 8.006024e-003, -2.329605e-003, -4.342700e-003, 5.945552e-003, -6.281994e-003, -1.831866e-004, 4.096704e-003, -6.245528e-003, -4.500149e-003, -7.818392e-003, 2.405127e-002, 2.975307e-002, -1.205496e-002, -2.088622e-003, 2.124333e-002, 9.721794e-003, 7.392847e-003, -6.716515e-003, -1.403180e-003, 1.631532e-002, 1.726889e-002, 3.913511e-003, 8.218969e-003, 2.185652e-002, 2.898874e-002, 2.665062e-002, 1.876856e-002, 1.370934e-004, -2.560073e-002, -4.538004e-002, -4.541074e-002, -3.995236e-002, -2.910570e-002, -2.877595e-002, -4.178529e-002, -4.773949e-002, -4.423463e-002, -2.702951e-002, -3.003610e-002, -4.445675e-002, -3.183577e-002, -8.206955e-003, 1.013700e-002, 1.757684e-002, 1.670574e-002, 6.693049e-003, -5.924954e-003, -1.595482e-002, -9.556548e-003, -3.711362e-003, -7.258279e-003, -7.778208e-003, -8.130794e-003, -3.152823e-003, 1.826053e-003, -2.783967e-003, 2.232659e-002, 2.244569e-002, -1.206292e-002, 5.307418e-003, 2.815084e-002, 1.454787e-002, 1.297381e-002, 7.854469e-003, 2.307915e-003, 1.015369e-002, 1.339347e-002, -4.190141e-003, -1.344759e-002, -1.023866e-002, -7.551375e-003, -1.245797e-002, -2.744086e-002, -3.717173e-002, -3.251581e-002, -2.182913e-002, -1.619915e-002, -9.438171e-003, -8.990134e-003, -1.095495e-002, -1.517513e-002, -1.931626e-002, -1.859616e-002, -1.755522e-002, -7.699447e-003, -3.253838e-002, -5.578004e-002, -4.935547e-002, -2.983599e-002, -1.530142e-002, -1.076795e-002, -1.364495e-002, -2.084147e-002, -2.235153e-002, -1.532864e-002, -1.129734e-002, -1.082594e-002, -1.273466e-002, -1.189769e-002, -2.409196e-003, 2.321283e-003, -1.152420e-003, 2.140710e-002, 1.918361e-002, -6.854051e-003, 7.775975e-003, 2.699934e-002, 2.382934e-002, 1.944832e-002, 7.465623e-003, 1.811776e-003, 5.236874e-003, 8.262022e-003, -8.113057e-003, -2.576863e-002, -3.082687e-002, -3.341539e-002, -4.270160e-002, -5.132167e-002, -4.184274e-002, -1.285798e-002, 8.421515e-003, 1.058268e-002, 6.350227e-003, -5.968970e-003, -9.867440e-003, -4.874861e-003, 9.710409e-003, 2.076021e-002, 1.170118e-002, 1.015759e-002, -4.130161e-003, -3.585051e-002, -5.176356e-002, -4.677661e-002, -3.459434e-002, -2.837327e-002, -2.943775e-002, -2.931381e-002, -2.612522e-002, -1.977150e-002, -1.221560e-002, -5.515089e-003, -9.963556e-004, -4.167380e-003, -1.866860e-003, 1.501963e-003, -9.382129e-004, 1.611983e-002, 1.597795e-002, -1.076582e-002, 4.030371e-003, 1.624456e-002, 1.477029e-002, 8.981950e-003, 1.787330e-003, -1.193375e-003, -2.775057e-003, -5.335481e-004, -1.332502e-002, -3.660300e-002, -4.335165e-002, -4.976608e-002, -5.534143e-002, -4.566404e-002, -1.573224e-002, 1.227435e-002, 2.879626e-002, 3.639522e-002, 2.620494e-002, 1.453378e-002, 1.269298e-003, 6.561475e-003, 2.813508e-002, 4.732475e-002, 3.664491e-002, 2.223044e-002, 1.167287e-002, -1.645977e-003, -2.321911e-002, -3.653681e-002, -3.844228e-002, -3.556021e-002, -3.274102e-002, -3.114792e-002, -2.330535e-002, -1.100493e-002, -1.373988e-003, 8.397103e-003, 1.455350e-002, 4.510017e-003, 5.810395e-004, 5.802702e-005, -3.238775e-003, 7.822547e-003, 9.053081e-003, -2.415810e-002, -9.808443e-003, 1.149738e-003, -5.666648e-003, -1.258636e-002, -1.046606e-002, -1.033415e-002, -1.230235e-002, -1.226125e-002, -1.038509e-002, -3.832700e-002, -4.817545e-002, -5.033220e-002, -4.246276e-002, -1.311989e-002, 1.900125e-002, 3.620540e-002, 4.256504e-002, 4.607727e-002, 3.626266e-002, 2.798604e-002, 2.420951e-002, 2.849979e-002, 4.265293e-002, 5.144413e-002, 4.740277e-002, 3.205557e-002, 1.920158e-002, 1.394414e-002, 9.898700e-003, -1.011610e-002, -2.439287e-002, -3.019023e-002, -2.941480e-002, -2.480597e-002, -1.650093e-002, -7.562163e-003, -2.130467e-003, 1.754084e-002,


© ISO/IEC 2004 — All rights reserved

Copyright International Organization for Standardization
Provided by IHS under license with ISO
No reproduction or networking permitted without license from IHS
Not for Resale

2.954213e-002, 1.080630e-002, 4.055348e-004, -6.645586e-003, -6.299353e-003, 1.052430e-003, 2.019029e-003, 5.740304e-003, -1.964620e-002, -7.115082e-003, -1.332658e-002, -3.294584e-002, -3.065314e-002, -1.829093e-002, -1.365219e-002, -1.884000e-002, -6.622232e-003, -3.206731e-002, -4.272509e-002, -3.417327e-002, -9.445168e-003, 2.458563e-002, 4.277861e-002, 4.736172e-002, 4.449077e-002, 3.749437e-002, 2.694536e-002, 2.818806e-002, 3.171836e-002, 3.409034e-002, 3.768642e-002, 3.986675e-002, 3.612366e-002, 2.895358e-002, 2.316207e-002, 2.347400e-002, 3.129559e-002, 1.963961e-002, -2.075314e-003, -1.807841e-002, -2.184644e-002, -1.270241e-002, -5.857336e-003, -6.587415e-003, -4.255144e-003, 1.624235e-002, 2.524471e-002, 7.108257e-003, 5.388917e-004, -4.412693e-003, -5.489822e-003, -6.636911e-003, -1.940390e-002, 2.013461e-003, -2.173569e-002, -8.601204e-003, -8.175667e-003, -2.146804e-002, -2.989273e-002, -1.745669e-002, -9.179257e-003, -1.413664e-002, -4.870935e-003, -2.182050e-002, -2.939990e-002, -8.297840e-003, 2.654037e-002, 4.680516e-002, 4.034916e-002, 2.646643e-002, 2.331659e-002, 2.476302e-002, 2.505718e-002, 3.131788e-002, 3.268901e-002, 3.210805e-002, 2.684589e-002, 2.284479e-002, 1.842017e-002, 1.616500e-002, 1.325502e-002, 1.739024e-002, 3.615555e-002, 3.430088e-002, 1.712259e-002, -1.381119e-003, -8.399860e-003, -1.269764e-003, -5.744027e-004, -3.825686e-003, -4.914513e-003, 1.050099e-002, 1.403410e-002, -2.803436e-003, -3.436383e-003, 3.308598e-003, -1.953572e-003, -3.960082e-003, -1.416364e-002, 7.526150e-003, -9.525412e-003, 3.764494e-004, 1.309185e-003, 1.617260e-004, -9.869103e-003, -1.501756e-002, 1.462524e-003, -1.280431e-003, -3.942855e-003, -1.201795e-002, -1.305509e-002, 1.526768e-002, 4.293091e-002, 4.485118e-002, 2.268621e-002, 1.385072e-002, 2.502546e-002, 2.557233e-002, 1.523481e-002, 6.140610e-003, 1.492651e-003, 4.789554e-004, 1.718156e-003, 7.686801e-003, 7.892203e-003, 1.082543e-002, 1.240325e-002, 1.868462e-002, 3.012476e-002, 3.477429e-002, 2.192619e-002, 6.087284e-003, 4.202622e-003, 7.118348e-003, -2.007568e-003, -2.335841e-003, -2.907466e-003, 1.001519e-002, -8.095069e-004, -1.074531e-002, -1.978592e-003, 8.077182e-003, 2.647937e-004, 5.857159e-003, -1.298595e-002, 1.524290e-002, -1.893503e-004, 9.217442e-003, 7.917546e-003, 1.172814e-002, 4.497866e-003, -5.194146e-003, 8.423892e-003, 7.356003e-003, -2.729015e-003, -2.367233e-003, -4.980613e-003, 2.089902e-002, 3.684812e-002, 2.825549e-002, 1.293906e-002, 1.602988e-002, 1.677182e-002, 4.579186e-003, -8.882915e-004, -3.867765e-003, -5.582672e-003, -1.711300e-003, 6.043583e-003, 7.019953e-003, 1.035649e-002, 1.838967e-002, 2.596820e-002, 3.262097e-002, 3.116053e-002, 3.105384e-002, 1.807165e-002, 5.386433e-003, 9.202431e-003, 8.637768e-003, -1.161288e-003, -1.500969e-003, 4.370032e-003, 1.233523e-002, -6.444677e-003, -1.129651e-002, -6.961718e-003, 1.124607e-003, 4.318004e-004, 5.040976e-003, -1.401836e-002, 2.188673e-002, 2.104749e-003, 8.458873e-003, 1.365221e-002, 1.620283e-002, 1.417378e-002, 4.285189e-004, 6.532398e-003, 1.148840e-002, -2.266042e-003, -1.180364e-003, -1.829620e-003, 1.055678e-002, 1.930991e-002, 1.221618e-002, -3.882587e-003, -1.277005e-002, -1.727451e-002, -1.226719e-002, -5.696607e-003, 1.153529e-004, 6.871280e-003, 9.958274e-003, 1.156322e-002, 6.937093e-003, 1.102529e-004, 7.324339e-004, 4.472925e-003, 1.752413e-002, 2.344688e-002, 2.132697e-002, 1.042671e-002, 2.966553e-003, 7.630598e-003, 2.758218e-003, -4.962773e-003, -5.171000e-003, 7.391133e-003, 7.658125e-003, -2.023340e-004, -4.875060e-003, -1.047147e-002, 2.333964e-004, -6.299906e-003, -1.440477e-003, -1.843053e-002, 2.188097e-002, 2.352837e-003, 1.067699e-003, 8.622229e-003, 1.427745e-002, 1.954310e-002, 1.201060e-002, 5.119645e-003, 7.693684e-003, 3.792247e-003, -3.381424e-003, 1.254569e-003, 2.802224e-003, 7.847910e-003, -2.598983e-004, -1.299588e-002, -1.790025e-002, -1.767575e-002, -1.302113e-002, -8.213328e-003, 2.590046e-004, 7.337325e-003, 1.013587e-002, 6.032308e-003, -4.623154e-003, -1.712658e-002, -2.392856e-002, -1.704705e-002, -3.513922e-003, 7.986283e-003, 1.074041e-002, 4.771387e-003, 1.160706e-003, 4.043297e-003, 2.428164e-003, -6.324944e-004, -1.167404e-002, -6.551817e-004, 5.761385e-003, 5.539052e-003, -3.934549e-003, -8.195514e-003, 8.914774e-004, -8.073193e-003, -6.349766e-003, -2.569845e-002, 1.684350e-002, 7.086506e-004, -5.424890e-004, 1.152221e-003, 9.356633e-003, 1.577263e-002, 1.590945e-002, -3.090161e-003, -5.575716e-003, 6.316857e-003, 1.100132e-004, 7.736508e-003, 1.324569e-002, 1.274668e-002, 6.255697e-004, -8.728010e-003, -1.217657e-002, -1.550586e-002, -1.272427e-002, -3.684819e-003, 7.208979e-003, 1.590320e-002, 1.701033e-002, 8.214395e-003, -7.062781e-003, -2.112118e-002, -2.659467e-002, -2.085802e-002, -9.604511e-003, -3.127366e-004, 6.608822e-003, 2.038958e-003, -3.198281e-004, 6.408323e-005, 2.196906e-004, -2.843863e-003, -2.093393e-002, -1.097602e-002, -6.570684e-003, -8.069080e-003, -9.908309e-003, -4.369977e-003, 8.110412e-003, -6.654846e-003, -3.707557e-003, -2.993300e-002, 1.132094e-002, -4.334925e-003, -5.716343e-003, -5.622471e-003, -4.359849e-003, -4.884285e-004, 1.640914e-003, -1.286581e-002, -1.277150e-002, -3.602517e-004, 4.147305e-003, 8.650846e-003, 2.047151e-002, 1.948779e-002, 8.334863e-003, 2.421234e-003, -5.013996e-003, -9.310320e-003, 2.834759e-003, 1.626749e-002, 2.943951e-002, 3.453586e-002, 3.189908e-002, 1.958826e-002, -3.756175e-005, -1.658121e-002, -2.416122e-002, -2.044292e-002, -9.841559e-003, 9.076185e-004, 5.248404e-003, 7.072806e-004, -3.278617e-003, -1.387119e-003, 6.686358e-003, -7.934310e-003, -1.634655e-002, -1.519229e-002, -1.727420e-002, -1.801276e-002, -5.703395e-003, 4.018014e-003, 1.223947e-002, -3.953781e-003, -2.433744e-003, -3.483291e-002, 4.644953e-003, 2.455242e-002, -5.259417e-003, 2.134490e-003, 1.820653e-003, 4.246604e-003, -4.669694e-004, -2.691927e-003, -8.807434e-003, -

© ISO/IEC 2004 — All rights reserved


--`,,```,,,,````-`-`,,`,,`,`,,`---

Copyright International Organization for Standardization
Provided by IHS under license with ISO
No reproduction or networking permitted without license from IHS
Not for Resale

1.023712e-002, 4.114176e-003, 1.000528e-002, 1.634480e-002, 2.291059e-002, 1.870228e-002, 1.254574e-002, 6.135825e-003, 1.046131e-003, 1.028831e-002, 1.902946e-002, 3.065038e-002, 3.048237e-002, 2.296403e-002, 9.478085e-003, -5.577056e-003, -1.635843e-002, -1.861271e-002, -1.576889e-002, -1.127057e-002, 9.597678e-004, 8.105777e-003, 5.672552e-003, 4.596458e-003, 4.089461e-003, 8.663518e-003, -9.911116e-003, -5.877774e-004, 3.618780e-003, -8.255324e-003, -9.252669e-003, 4.233953e-003, 1.128552e-002, 1.375764e-002, -3.761426e-004, 3.283155e-003, -3.530340e-002, 5.195784e-004, 1.331593e-002, -1.284950e-002, 9.641110e-003, 1.728098e-002, 6.600196e-003, -6.966928e-003, -6.919047e-003, 1.819784e-004, -1.310534e-002, -6.196150e-003, 6.146061e-003, -8.233548e-004, 6.072483e-003, 1.164711e-002, 1.430738e-002, 1.339143e-002, 1.075370e-002, 1.284176e-002, 1.399159e-002, 1.331173e-002, 3.798397e-003, -5.074888e-003, -1.264471e-002, -1.757238e-002, -1.844537e-002, -1.743846e-002, -1.585136e-002, -8.150425e-003, 7.983149e-003, 1.143922e-002, 1.268789e-002, 1.164596e-002, 3.997226e-003, -3.368124e-003, -1.342392e-002, -6.484512e-004, 1.625575e-002, 7.057606e-003, 2.070000e-003, 1.119447e-002, 8.812811e-003, 1.428208e-002, 4.792428e-003, 1.125011e-002, -3.523344e-002, -1.091638e-002, 9.502787e-004, -2.218834e-002, 2.763817e-003, 1.384205e-002, 1.992031e-003, -1.076923e-002, -4.194430e-003, 1.264089e-002, -2.571520e-003, -1.256360e-002, 1.889842e-003, -3.408133e-003, -8.473781e-003, -5.612587e-003, 3.066563e-003, 1.266832e-002, 1.626284e-002, 1.547074e-002, 9.390109e-003, 1.611948e-003, -8.944445e-003, -1.821655e-002, -2.238904e-002, -2.073624e-002, -1.727425e-002, -1.149536e-002, -7.250195e-003, 3.880113e-004, 8.612174e-003, 7.074701e-003, 1.453298e-002, 1.212899e-002, -4.395052e-003, -1.487847e-002, -1.717208e-002, -8.646555e-003, 7.943158e-003, 9.615763e-003, 5.045489e-003, 2.003170e-003, -6.225300e-003, 1.691898e-003, 8.439696e-004, 1.057403e-002, -2.229055e-002, -6.170530e-003, -1.010722e-003, -3.021269e-002, -1.445865e-002, -3.399505e-004, -9.003214e-003, -2.142781e-002, -2.859077e-003, 2.177001e-002, 6.778084e-003, -1.241387e-002, -2.217916e-003, 1.111108e-003, -1.112628e-002, -1.666898e-002, -1.191007e-002, 2.291032e-003, 1.140458e-002, 1.197847e-002, 5.454962e-003, -5.526099e-003, -1.509404e-002, -2.040861e-002, -1.965458e-002, -1.616041e-002, -1.385705e-002, -5.252111e-003, 1.284725e-003, 5.838018e-003, 4.926738e-003, 3.799568e-004, 9.791043e-003, 1.330930e-003, -1.307959e-002, -1.717639e-002, -1.009891e-002, -1.222072e-002, -3.793252e-004, -7.383456e-003, -7.604600e-003, -1.423864e-002, -2.067057e-002, -1.593390e-002, -1.907364e-002, -3.562623e-004, 1.106470e-002, 1.895751e-002, 1.479680e-002, -1.882287e-002, -4.785936e-003, 1.073550e-003, -1.186653e-002, -1.947077e-002, 2.550340e-003, 2.417926e-002, 1.343336e-002, 4.146654e-004, 3.444455e-003, 1.627483e-002, 3.897975e-003, -7.855945e-003, -1.060029e-002, -3.049136e-003, 9.223350e-003, 8.369223e-003, 6.775774e-004, -7.816270e-004, 6.262471e-005, 2.267904e-004, -8.914685e-004, 3.395946e-003, 6.937350e-003, 1.468750e-002, 2.111593e-002, 2.657586e-002, 2.200814e-002, 5.313727e-003, -1.693644e-003, -1.016457e-002, -1.162205e-002, -7.199239e-003, 3.798598e-003, -9.392323e-003, 8.168273e-003, -2.645862e-003, -1.453898e-002, -1.450518e-002, -1.806272e-002, -1.906482e-002, -3.303487e-002, -1.730224e-002, 2.079355e-002, 2.638171e-002, 1.051187e-002, -2.947045e-002, -9.693557e-003, -1.069726e-002, -2.285607e-002, -1.844382e-002, -9.784688e-003, 5.544925e-003, -5.529812e-004, -6.926855e-003, -6.432026e-003, 5.885058e-003, 1.949426e-003, -1.109466e-002, -1.955263e-002, -1.882466e-002, -8.818585e-003, -1.639371e-002, -2.777422e-002, -2.959849e-002, -2.306127e-002, -1.404970e-002, -8.749310e-003, -5.712536e-003, -2.455170e-004, 3.373874e-003, 2.107721e-002, 2.494249e-002, 1.797077e-002, -1.118804e-003, -1.100712e-002, -1.498007e-002, 8.701005e-005, 1.004015e-002, 1.331959e-002, -4.296212e-003, 1.439620e-002, 2.135266e-002, 8.067068e-003, 3.319351e-003, 1.003174e-002, 1.594022e-002, 7.767496e-003, 1.751047e-002, 1.874608e-002, 2.054750e-002, 1.019845e-002, 6.177866e-003, 1.823068e-002, 1.107878e-002, 2.583990e-003, 9.125535e-003, -1.019995e-005, -9.506989e-004, 1.526793e-003, 2.587454e-003, 4.057469e-003, 1.023358e-002, 1.317832e-002, 8.635563e-003, 6.141053e-003, 2.833644e-003, 9.378250e-003, -2.583115e-004, -1.802137e-002, -2.694963e-002, -2.698241e-002, -2.254546e-002, -1.991286e-002, -1.295350e-002, -2.416346e-003, 6.597874e-003, 1.432008e-002, 1.111475e-002, -8.065148e-003, -1.986674e-002, -1.858479e-002, -1.335530e-002, 8.258899e-003, 9.446888e-003, 9.733424e-003, -1.951678e-002, 3.157660e-003, 2.031918e-002, 4.664015e-003, -7.068204e-003, 1.986777e-003, 1.008704e-002, 3.331270e-003, 1.405813e-002, 4.076214e-003, 5.543467e-003, 8.227023e-004, -5.121498e-003, 8.857130e-003, 9.983917e-003, 1.501359e-002, 1.167926e-002, -1.119696e-002, -1.756462e-002, -1.093771e-002, -2.169022e-003, 7.634689e-004, 7.384593e-003, 6.526466e-003, -1.107495e-003, -3.508165e-003, 8.553917e-004, 6.448074e-003, 4.810923e-003, -5.340410e-003, -1.365146e-002, -2.005455e-002, -2.019725e-002, -1.853609e-002, -1.053365e-002, -5.737636e-003, 1.267144e-003, 1.511284e-003, -6.274713e-003, -2.093765e-002, -2.058148e-002, -2.050679e-002, -7.606798e-003, 1.397616e-002, 1.153518e-002, 3.622946e-003, -1.946566e-002, -1.023411e-002, 7.420286e-003, -6.789278e-003, -1.076293e-002, -7.384832e-003, -1.230186e-002, -1.223501e-002, 5.264945e-003, -9.642804e-003, -9.983848e-003, -8.633993e-003, -3.136570e-003, 7.949357e-003, 9.131233e-004, 3.057543e-003, 3.182756e-005, -1.535910e-002, -1.410693e-002, -2.124377e-002, -1.591668e-002, -1.069125e-002, -7.371421e-004, 1.588670e-004, -7.614104e-003, -1.309349e-002, -1.002995e-002, -1.870207e-003, 3.944789e-003, 3.409624e-004, -3.758479e-003, -8.396437e-003, -1.070368e-002, -9.029092e-003, -7.681798e-003, -


© ISO/IEC 2004 — All rights reserved

--`,,```,,,,````-`-`,,`,,`,`,,`---
Copyright International Organization for Standardization
Provided by IHS under license with ISO
No reproduction or networking permitted without license from IHS
Not for Resale

4.209319e-003, 5.906298e-004, 6.925735e-004, -4.819181e-003, -1.131177e-002, -1.055347e-002, -1.475675e-002, -1.084040e-002, 1.050439e-002, 1.595929e-002, 4.905155e-004, -1.600515e-002, -6.474941e-003, -1.165797e-003, -1.831970e-002, -2.125812e-002, -5.523461e-003, -1.363437e-002, -1.929573e-002, -4.797384e-003, -1.767931e-002, -8.110388e-003, 4.342092e-003, 1.430424e-002, 1.473227e-003, -1.257604e-002, -4.962410e-003, 1.030219e-002, 1.523321e-002, 1.111283e-002, -9.671718e-003, -1.157338e-002, -6.645433e-003, -2.042642e-004, 7.879410e-003, 4.565205e-003, -4.005074e-003, -7.862510e-003, -8.096241e-003, -5.941533e-003, -5.833389e-003, -6.398427e-003, -7.971588e-003, -9.865984e-003, -6.006738e-003, -2.593411e-003, 3.964319e-004, 7.381634e-003, 1.511622e-002, 1.680654e-002, 8.576741e-003, -1.122976e-004, -1.393708e-002, -2.304813e-002, -3.212766e-003, 1.029560e-002, 1.060327e-002, -3.439120e-004, 4.327557e-003, 6.156698e-003, -1.135065e-002, -1.765284e-002, 2.047974e-003, 1.254242e-002, 1.103110e-002, 1.395638e-002, -3.671485e-003, 1.100154e-002, 1.527770e-002, 1.006436e-002, -7.597251e-003, -1.760952e-002, -9.700785e-003, 2.840571e-003, 1.828210e-002, 1.727587e-002, -9.718535e-003, -1.970170e-002, -2.068757e-002, -1.132808e-002, -1.887358e-003, 1.460806e-003, -4.622941e-003, -7.885527e-003, -7.771880e-003, -6.928052e-003, -4.638537e-003, -2.170339e-003, -1.935358e-003, -1.399310e-003, 5.235977e-003, 1.131667e-002, 1.879167e-002, 2.828445e-002, 3.659624e-002, 3.479214e-002, 2.403643e-002, 8.084620e-003, -1.314593e-002, -4.942685e-002, -3.458469e-002, -1.808920e-002, -6.299668e-003, -1.006293e-002, -7.016820e-003, -7.952390e-003, -1.354883e-002, -2.207453e-002, -1.321835e-002, 9.263194e-003, 2.750495e-002, 4.151489e-002},
{-1.250907e-002, -2.312670e-002, -9.781415e-003, -6.662034e-003, -7.735702e-003, -3.290911e-003, 1.103617e-002, 1.856878e-002, 1.745363e-002, 2.018581e-002, 2.423080e-002, 2.168391e-002, 7.084438e-003, -3.001038e-003, -5.551927e-003, -4.445172e-003, -1.951420e-003, 8.499628e-004, 3.695292e-003, 7.637484e-003, 8.766038e-003, 6.132382e-003, 4.306065e-003, 1.892954e-003, -2.514807e-003, -8.295473e-003, -1.708237e-002, -2.240899e-002, -2.770667e-002, -2.295559e-002, -1.128784e-002, 1.400282e-004, 1.194574e-003, -6.027301e-003, -1.115360e-002, -6.261038e-003, 6.724008e-003, 1.271907e-002, 1.138708e-002, 4.924780e-003, -4.942498e-003, -1.940729e-002, -2.689208e-002, 4.498265e-003, 1.873371e-002, 2.992822e-002, 9.979161e-003, -1.693625e-003, 1.181567e-002, 6.185052e-003, -6.361764e-003, -1.116598e-002, -7.311258e-003, -1.119450e-002, -1.088364e-002, -1.354728e-003, -1.845138e-003, -1.219509e-002, -2.057387e-002, -1.705641e-002, -3.743825e-003, 1.934741e-003, 1.026390e-003, -1.075724e-003, -4.105893e-003, 3.833763e-003, 1.117277e-002, 1.548851e-002, 2.209499e-002, 2.631336e-002, 2.343132e-002, 1.336475e-002, -8.785926e-005, -1.267707e-002, -2.698731e-002, -3.015055e-002, -2.327755e-002, -1.016947e-002, 5.889728e-003, 1.221708e-002, 4.169975e-003, 5.061051e-004, 8.270880e-003, 1.712757e-002, 1.822994e-002, 6.543587e-003, 1.794227e-003, 3.538336e-003, -8.793538e-003, -1.719836e-002, 7.109495e-003, 2.602002e-002, 8.899167e-003, -3.047758e-004, 5.462745e-003, -7.972606e-003, -1.899895e-002, -1.623525e-002, -2.124824e-002, -1.565195e-002, -6.909101e-003, 1.800434e-004, -2.317567e-003, -6.347080e-003, 3.562164e-003, 1.291741e-002, 1.247898e-002, 6.741119e-003, 1.221075e-003, -8.137237e-004, -1.192314e-003, 8.614231e-003, 1.821521e-002, 2.513259e-002, 2.854375e-002, 3.143258e-002, 2.734440e-002, 1.430230e-002, -1.619216e-003, -1.160478e-002, -1.407030e-002, -1.357555e-002, -1.317236e-002, -9.777396e-003, 6.096727e-004, 1.969942e-002, 1.964082e-002, 7.312209e-003, 5.194143e-003, 9.929130e-003, 9.597899e-003, -2.323389e-003, -1.927704e-002, -5.208075e-003, 1.470706e-003, -1.521837e-002, -6.011998e-003, 1.885978e-002, 9.536457e-003, -4.433787e-003, -3.594094e-003, -1.957876e-002, -1.729432e-002, -1.673492e-002, -2.227095e-002, -1.233923e-002, -8.648025e-003, 1.153715e-003, 2.722711e-003, 4.064776e-003, 1.096991e-002, 6.541550e-003, -2.258419e-003, -6.515471e-003, -8.926769e-003, -1.219251e-002, -1.079158e-002, -4.030257e-003, 3.398276e-003, 8.250784e-003, 1.352072e-002, 1.713464e-002, 1.803309e-002, 8.025269e-003, -9.102334e-003, -2.577339e-002, -3.498308e-002, -2.970308e-002, -1.496403e-002, -4.141145e-003, -1.717731e-003, 9.133670e-003, 1.681760e-002, 8.990508e-003, -4.735661e-003, 4.575911e-004, -5.819629e-003, -1.175047e-002, -2.854542e-002, -2.688625e-002, 8.251150e-004, -4.227737e-003, -1.277189e-002, 5.936913e-003, 3.340497e-002, 1.138241e-002, 8.854354e-003, 6.453271e-003, 1.198956e-002, 2.040652e-003, -4.009170e-003, -2.635303e-003, 3.337703e-003, 7.486433e-003, 2.307865e-003, 2.171386e-003, 1.806780e-003, -5.268719e-003, -9.614881e-003, -7.857463e-003, -1.219703e-002, -2.144720e-002, -2.755127e-002, -2.382777e-002, -1.425448e-002, -5.546114e-003, 7.103764e-003, 2.194831e-002, 2.841452e-002, 2.357011e-002, 1.166503e-002, -4.165959e-003, -2.200036e-002, -3.023485e-002, -2.231318e-002, -1.695385e-003, 1.740247e-002, 2.085131e-002, 2.057614e-002, 1.983028e-002, 7.754600e-003, -5.432100e-003, 4.957007e-003, -1.226519e-003, -8.954398e-003, -1.351602e-002, -5.249176e-003, 5.583760e-003, -1.083763e-002, 1.511696e-003, 2.584292e-002, -8.746587e-004, 7.981481e-003, 1.532190e-002, 1.422663e-002, 1.693576e-003, -4.909663e-003, -8.411115e-004, 7.328662e-003, -2.397112e-003, -1.039120e-002, -9.063162e-003, -4.991793e-003, -8.221875e-003, -1.066532e-002, -1.270850e-002, -2.712807e-002, -3.920906e-002, -4.601327e-002, -4.098163e-002, -2.982449e-002, -1.225006e-002, 5.954796e-003, 2.349684e-002, 3.257535e-002, 3.254105e-002, 2.138933e-002, 7.818987e-003, -5.795877e-003, -1.528471e-002, -1.767650e-002, -1.047829e-002, 3.506645e-003, 2.191609e-002, 2.668194e-002, 1.873511e-002, 5.657781e-003, -6.179042e-003, -3.111869e-003, 3.384038e-003, -2.136111e-003, -6.137965e-003, -

© ISO/IEC 2004 — All rights reserved


Copyright International Organization for Standardization
Provided by IHS under license with ISO
No reproduction or networking permitted without license from IHS
Not for Resale

1.090540e-002, 1.645798e-002, 3.122474e-003, 4.812035e-003, 1.837368e-002, -5.794074e-003, 1.656684e-002, 2.115969e-002, 6.242214e-003, -1.481899e-003, -3.993892e-003, 2.900880e-003, 2.555062e-003, -1.354626e-002, -1.671167e-002, -7.421186e-003, -2.855552e-003, -4.771267e-003, -4.369973e-003, -1.597568e-002, -3.263008e-002, -4.283373e-002, -4.632102e-002, -4.136977e-002, -3.110671e-002, -1.333075e-002, 7.285904e-003, 2.409794e-002, 3.112875e-002, 3.446430e-002, 2.520854e-002, 1.670594e-002, 9.249938e-003, -1.362094e-004, -7.351528e-003, -5.246370e-003, -4.289121e-004, 9.661629e-003, 1.933060e-002, 1.811460e-002, 3.436541e-004, -9.081631e-003, -9.803864e-003, 3.144020e-003, -4.982990e-004, -5.660283e-003, 5.286794e-003, 1.353276e-002, 5.886660e-003, 2.950574e-003, 1.087516e-002, -8.103532e-003, 2.078678e-002, 1.507361e-002, -1.436463e-004, -4.530651e-004, 3.372601e-003, 4.399888e-003, -5.973775e-003, -1.677231e-002, -3.416372e-003, 4.928957e-003, 3.856387e-003, 1.113658e-003, -7.548662e-003, -2.245302e-002, -3.434979e-002, -4.479066e-002, -4.813812e-002, -4.932865e-002, -3.673274e-002, -1.539771e-002, 5.532793e-003, 2.061659e-002, 2.843199e-002, 3.342810e-002, 2.442177e-002, 1.796049e-002, 1.233142e-002, 6.423938e-003, -7.047749e-005, -9.864320e-004, 9.245056e-003, 1.288181e-002, 8.264013e-003, 9.899073e-003, 1.486490e-003, -1.017673e-002, -1.516706e-002, -2.538354e-003, -3.438385e-003, -9.529797e-003, 5.592976e-003, 1.503790e-002, 1.104257e-002, 3.652370e-003, 7.663951e-003, -7.110984e-003, 2.035668e-002, 1.077670e-002, -7.180654e-004, 4.798076e-003, 5.399594e-003, 1.213987e-003, -8.512146e-003, -4.649107e-003, 1.359644e-002, 1.154160e-002, 1.969169e-003, -9.176691e-004, -8.578517e-003, -2.220131e-002, -3.801600e-002, -5.396749e-002, -6.029766e-002, -6.037189e-002, -4.360877e-002, -1.908263e-002, 2.373979e-003, 1.818343e-002, 2.793209e-002, 3.150576e-002, 2.538628e-002, 1.934055e-002, 1.289333e-002, 4.226263e-003, -1.929922e-003, -1.903650e-003, 5.747313e-003, 1.650172e-002, 1.536731e-002, 2.367487e-003, -6.258888e-003, -1.361026e-002, -1.403652e-002, -3.385587e-003, -5.638492e-003, -1.258329e-002, 3.121655e-003, 1.440080e-002, 1.186861e-002, 4.391942e-003, 6.560311e-003, -5.308567e-003, 1.399834e-002, 6.608000e-003, 5.324480e-003, 8.506918e-003, 3.665009e-003, -3.415241e-003, -3.635056e-003, 1.268396e-002, 2.137588e-002, 7.404422e-003, 3.673735e-003, 3.688746e-003, -5.057706e-003, -1.866165e-002, -4.249428e-002, -5.910629e-002, -6.591136e-002, -6.468021e-002, -4.616811e-002, -2.202410e-002, -3.906155e-004, 1.611999e-002, 2.822882e-002, 3.337123e-002, 3.301690e-002, 2.800802e-002, 2.102971e-002, 7.787332e-003, -3.115454e-003, -5.797219e-003, -1.474696e-003, 9.244094e-003, 1.283542e-002, 5.060656e-003, -1.219727e-002, -1.604463e-002, -1.482750e-002, 5.389164e-003, 4.738345e-003, -1.810029e-002, -4.039895e-003, 6.028828e-003, 1.732472e-002, 1.773608e-004, 2.127015e-003, 9.133979e-003, 8.131664e-003, 2.285800e-003, 8.960979e-003, 7.659873e-003, 6.861705e-003, -2.019133e-004, 2.068120e-003, 1.576061e-002, 9.660355e-003, 5.754802e-003, 1.010188e-002, 1.748840e-002, 9.402311e-003, -1.319888e-002, -4.268782e-002, -5.922058e-002, -6.415911e-002, -6.154169e-002, -4.296700e-002, -2.567948e-002, -6.118446e-003, 1.162166e-002, 2.635922e-002, 3.603216e-002, 4.064418e-002, 4.014852e-002, 3.293378e-002, 1.981317e-002, 7.114965e-003, -5.490272e-003, -4.625173e-003, 3.982469e-003, 3.481755e-003, 3.823994e-003, -5.871943e-003, -1.293931e-002, -1.578267e-002, 6.164561e-003, 1.656994e-002, -1.144279e-002, -5.998370e-003, -4.710144e-003, 2.479200e-003, -5.167745e-003, -2.442169e-003, 9.198485e-003, -4.545554e-005, -1.270448e-003, 1.476103e-002, 7.135637e-003, 6.887899e-003, 1.931437e-003, 4.881517e-003, 7.085697e-003, -2.779934e-003, 8.093146e-003, 2.584578e-002, 3.257055e-002, 1.473031e-002, -1.345136e-002, -4.098620e-002, -5.189463e-002, -5.368601e-002, -5.143959e-002, -3.562949e-002, -2.227526e-002, -6.966829e-003, 1.307703e-002, 2.674372e-002, 4.192157e-002, 5.160063e-002, 5.083322e-002, 4.415657e-002, 3.247719e-002, 1.835408e-002, 3.518140e-003, -9.825638e-004, 4.615558e-003, -1.809482e-003, -2.337920e-003, -1.972994e-004, 9.487390e-004, -7.472413e-003, 3.517492e-003, 2.079661e-002, -3.198483e-003, 3.015412e-005, -5.809139e-003, -7.076165e-003, -1.128353e-002, -3.608607e-003, 2.967909e-003, -1.206609e-002, 2.434306e-003, 1.388336e-002, 5.931915e-003, 5.754362e-003, 2.174694e-003, 1.837306e-003, -3.623407e-003, -4.340189e-003, 2.282926e-002, 4.336437e-002, 3.377646e-002, 5.875701e-003, -1.751850e-002, -3.480903e-002, -4.186283e-002, -4.049457e-002, -3.874320e-002, -2.958129e-002, -1.982347e-002, -5.749989e-003, 1.301030e-002, 2.782122e-002, 4.920650e-002, 6.177902e-002, 6.272313e-002, 5.422575e-002, 4.236307e-002, 2.569421e-002, 1.578431e-002, 9.377434e-003, 7.648860e-003, -2.936988e-003, -7.506530e-003, -4.229337e-003, 1.307048e-002, 1.009226e-002, 2.951438e-003, 1.731567e-002, 9.092751e-003, 2.306608e-003, -4.872430e-005, -4.789058e-003, -1.985964e-002, -6.701825e-003, -7.150034e-003, -1.804238e-002, 1.440908e-003, 1.114565e-002, 1.805332e-003, 2.146081e-003, 8.450009e-004, -2.749914e-003, -8.238296e-003, 3.405934e-003, 3.787622e-002, 4.204202e-002, 1.978746e-002, -6.562009e-003, -2.037993e-002, -2.946301e-002, -2.863090e-002, -2.491325e-002, -2.425408e-002, -2.524759e-002, -2.092526e-002, -1.084841e-002, 7.911436e-003, 2.354364e-002, 4.923372e-002, 6.397069e-002, 6.729114e-002, 6.209128e-002, 4.554186e-002, 3.111095e-002, 1.983584e-002, 9.207519e-003, 6.799671e-003, -8.253505e-004, -9.439139e-003, -8.231791e-003, 9.935083e-003, 1.829000e-002, 4.807918e-003, 1.048662e-002, 1.512877e-002, 4.031547e-003, 1.128257e-003, -2.934815e-003, -1.405146e-002, -6.965548e-003, -8.276144e-003, -1.457722e-002, 2.956769e-004, 9.975649e-003, -4.053585e-003, 2.402710e-003, -5.632626e-004, -4.395286e-003, -6.629087e-003, 1.049715e-002, 3.346415e-002,


--`,,```,,,,````-`-`,,`,,`,`,,`---

© ISO/IEC 2004 — All rights reserved

Copyright International Organization for Standardization
Provided by IHS under license with ISO
No reproduction or networking permitted without license from IHS
Not for Resale

2.325909e-002, -2.538777e-003, -1.732656e-002, -2.328310e-002, -2.089210e-002, -1.001564e-002, -8.946857e-003, -1.213149e-002, -1.722385e-002, -2.008337e-002, -1.480163e-002, 6.180924e-004, 1.776989e-002, 4.339141e-002, 6.449439e-002, 6.810036e-002, 6.241476e-002, 4.659506e-002, 3.274237e-002, 1.910684e-002, 7.601765e-003, 5.608123e-003, 2.743800e-003, -8.474325e-003, -1.261259e-002, 9.482776e-004, 2.182721e-002, 9.636580e-003, 6.533340e-003, 9.640086e-003, 1.792752e-003, 8.033448e-003, 5.481405e-003, -4.609419e-003, -7.334217e-003, -5.363325e-003, -7.719653e-003, -4.247854e-003, 6.382754e-003, -4.078636e-003, -1.658042e-003, 2.244063e-003, -8.741408e-004, -3.472015e-003, 6.735919e-003, 1.424455e-002, -4.670827e-003, -2.801026e-002, -3.800086e-002, -3.321630e-002, -1.675118e-002, -1.605803e-003, 1.445919e-003, -3.068843e-003, -1.056562e-002, -1.439835e-002, -1.145053e-002, 2.512152e-004, 1.635011e-002, 3.914059e-002, 5.841007e-002, 5.892509e-002, 5.158670e-002, 3.916874e-002, 2.641932e-002, 1.290416e-002, 1.121682e-003, 5.751202e-003, 8.811731e-003, -4.550821e-003, -1.610508e-002, -1.094070e-002, 1.029783e-002, 9.514855e-003, -2.405905e-004, 3.602063e-003, 8.463928e-004, 1.206767e-002, 9.177933e-003, 1.559233e-003, -8.705155e-003, 1.541226e-003, -2.332362e-003, -6.648601e-003, 2.116321e-003, 2.955469e-004, 1.631256e-003, 7.621245e-003, 6.133207e-003, -4.354886e-003, -2.149946e-003, -1.027372e-002, -3.484407e-002, -5.111170e-002, -4.893150e-002, -3.316354e-002, -1.055353e-002, 2.225849e-003, 3.496072e-003, -1.230793e-003, -6.086580e-003, -9.420198e-003, -9.007884e-003, -2.197650e-003, 9.701133e-003, 2.764076e-002, 4.122356e-002, 4.381019e-002, 4.130788e-002, 2.993951e-002, 1.852473e-002, 6.507498e-003, 8.420953e-004, 6.540997e-003, 1.135483e-002, 3.008636e-003, -1.603592e-002, -1.771437e-002, -3.778444e-003, 4.337105e-003, -9.800996e-004, 3.117225e-004, 2.677678e-003, 9.637091e-003, 6.350593e-003, 3.408638e-003, -7.382334e-003, 7.568577e-003, -1.203648e-003, -5.361051e-003, 1.463134e-003, 5.203494e-003, 1.240274e-002, 1.534016e-002, 1.273377e-002, -3.894975e-003, -1.212831e-002, -3.184116e-002, -5.117979e-002, -5.172658e-002, -3.444498e-002, -1.130108e-002, 7.939906e-003, 1.744176e-002, 1.679391e-002, 6.382418e-003, -2.462389e-003, -7.692683e-003, -1.174886e-002, -1.220490e-002, -7.577778e-003, 6.449453e-003, 2.164866e-002, 3.032780e-002, 2.877670e-002, 2.213090e-002, 1.070706e-002, 1.447240e-004, -1.855557e-003, 3.257247e-003, 1.716564e-002, 1.217559e-002, -9.900701e-003, -1.777348e-002, -1.489932e-002, -2.486125e-003, -3.008869e-003, -4.739707e-003, 1.556277e-003, 5.376902e-003, 9.292199e-004, 8.137485e-003, -3.993511e-003, 1.378946e-002, 2.038883e-003, -1.489234e-003, 3.382993e-003, 1.098315e-002, 2.053323e-002, 2.517353e-002, 2.014053e-002, 1.133663e-004, -1.359923e-002, -2.598353e-002, -3.677833e-002, -2.784655e-002, -1.009303e-002, 1.072250e-002, 2.417896e-002, 3.198429e-002, 3.394963e-002, 2.219693e-002, 5.072931e-003, -7.938073e-003, -1.775350e-002, -2.480887e-002, -2.522355e-002, -1.307195e-002, 8.309485e-003, 1.952038e-002, 1.738883e-002, 1.181664e-002, 1.664346e-003, -9.190547e-003, -9.970137e-003, -1.023040e-002, 1.066130e-002, 2.496515e-002, 1.086381e-002, -2.524056e-003, -1.170156e-002, -1.242807e-002, -8.864446e-003, -5.498526e-003, 3.369287e-005, -1.874594e-003, -6.013729e-003, 1.017451e-002, -7.539299e-003, 1.587258e-002, 5.694067e-003, 8.152156e-004, -1.125547e-003, 5.278847e-003, 1.778890e-002, 2.509959e-002, 2.008659e-002, 2.547749e-003, -1.046360e-002, -1.383973e-002, -8.320523e-003, -1.957700e-003, -1.675086e-003, -5.710015e-005, 6.462780e-004, -2.070829e-003, -1.283078e-003, -8.238033e-004, -1.119670e-002, -2.570237e-002, -3.452883e-002, -4.260097e-002, -4.555184e-002, -2.967506e-002, -9.142981e-003, -7.393317e-004, 3.948408e-003, 1.173426e-002, 1.188908e-002, 2.103245e-003, -1.550925e-002, -3.117769e-002, -2.445294e-002, 7.667281e-003, 2.230769e-002, 1.055795e-002, -3.991821e-003, -1.890390e-002, -1.135535e-002, -4.938169e-003, -5.275267e-003, -1.121822e-002, -8.544369e-003, 1.092325e-002, -1.043821e-002, 1.797407e-002, 1.802810e-002, 8.581881e-004, -2.852088e-003, -2.607200e-004, 1.002902e-002, 1.575479e-002, 1.045232e-002, -3.260034e-003, -2.578062e-002, -1.464052e-002, -7.201615e-003, -1.576216e-002, -1.887165e-002, -1.851209e-002, -1.891509e-002, -2.075796e-002, -2.743765e-002, -2.913243e-002, -3.588890e-002, -4.224621e-002, -5.248137e-002, -6.503351e-002, -7.421864e-002, -5.953518e-002, -4.147502e-002, -1.636582e-002, 1.705837e-002, 3.795395e-002, 3.523187e-002, 1.728496e-002, -4.021487e-003, -2.466292e-002, -3.928399e-002, -3.214445e-002, -5.185181e-003, 1.344334e-002, 6.157645e-003, -1.576589e-002, -8.132164e-004, -3.968987e-004, -4.754946e-003, -1.267302e-002, -1.138133e-002, 1.097722e-002, -3.124416e-003, 1.467586e-002, 2.011994e-002, 9.689639e-003, 7.887923e-004, 3.369369e-004, 2.964797e-003, 4.331079e-003, -8.960441e-003, -1.200169e-002, -2.136508e-002, -2.197273e-003, -5.488215e-003, -1.951954e-002, -3.236585e-002, -4.525486e-002, -4.991337e-002, -5.030081e-002, -4.858293e-002, -4.442496e-002, -4.808159e-002, -5.363618e-002, -6.097122e-002, -8.583877e-002, -9.924439e-002, -8.640629e-002, -6.433534e-002, -2.456377e-002, 4.002025e-003, 6.788168e-003, -5.991067e-003, -1.692206e-002, -1.476722e-002, -6.154958e-003, -1.450314e-002, -2.957733e-002, -2.935020e-002, -2.996019e-003, 7.345517e-003, -8.846621e-003, 8.857478e-003, 2.365683e-003, -4.396787e-003, -2.900234e-003, -1.355739e-002, 1.131526e-002, -8.744236e-003, 1.224092e-002, 1.388701e-002, -4.006316e-003, -6.355510e-003, 2.758591e-004, -4.529105e-003, -1.257773e-002, -1.756222e-002, 1.330341e-003, -3.288259e-003, 7.611584e-003, 7.802552e-003, -1.685243e-003, -2.940995e-002, -3.259653e-002, -2.674226e-002, -2.009383e-002, -3.519467e-002, -5.164303e-002, -4.991319e-002, -4.990750e-002, -5.194286e-002, -8.143165e-002, -9.397517e-002, -7.740112e-002, -6.003445e-002, -3.113780e-002, -

© ISO/IEC 2004 — All rights reserved


--`,,```,,,,````-`-`,,`,,`,`,,`---

Copyright International Organization for Standardization
Provided by IHS under license with ISO
No reproduction or networking permitted without license from IHS
Not for Resale

1.234206e-002, -1.280926e-002, -1.451480e-002, -2.488993e-002, -2.260025e-002, 2.782318e-003, 1.794106e-002, -6.346863e-003, -3.126433e-002, -1.542654e-002, 4.654518e-003, -1.133839e-002, 4.453168e-003, -3.772807e-003, -5.578647e-003, -8.554985e-004, -9.354289e-003, 6.423213e-003, -1.070129e-002, 1.037694e-002, -7.997798e-004, -1.628551e-002, -1.426753e-002, -2.529884e-003, -1.779807e-002, -3.182310e-002, -2.336328e-002, 7.557773e-003, 2.766277e-003, -1.009809e-003, 9.000817e-003, -4.524709e-003, -3.500126e-002, 4.555029e-004, 2.502484e-002, 1.406334e-002, -1.302385e-002, -3.476663e-002, -4.724934e-002, -4.012298e-002, -5.027970e-002, -7.095947e-002, -7.156972e-002, -4.670618e-002, -4.018075e-002, -2.848473e-002, -1.198872e-002, -9.387793e-003, -1.829901e-003, -1.689767e-002, -3.877400e-002, -2.195756e-002, 7.933950e-003, -6.065121e-004, -2.668741e-002, -1.645988e-002, 8.335246e-003, -1.743635e-002, -2.203031e-003, -9.097451e-003, -4.535704e-003, 2.290209e-003, -8.022145e-003, 4.239667e-003, 1.024650e-002, 7.009980e-003, -9.295481e-003, -1.461746e-002, -1.499894e-002, 3.900905e-004, -1.131928e-002, -2.624635e-002, -2.499991e-002, 1.522167e-003, -7.534388e-003, -2.450858e-002, -2.100609e-002, -1.956049e-002, -5.871346e-002, -1.750752e-002, 1.707104e-002, -1.555522e-002, -1.317115e-002, -1.824915e-002, -2.221446e-002, -7.563834e-003, -9.808143e-003, -3.247221e-002, -3.398774e-002, -3.959022e-003, -1.383655e-002, -1.666584e-002, -2.017600e-002, -5.439579e-002, -3.136267e-002, -2.327023e-002, -4.030914e-002, -4.619211e-002, -1.950816e-002, -9.084185e-003, -1.622525e-002, 1.380427e-004, 1.818942e-002, -1.005031e-002, 6.772581e-003, -2.683429e-003, 7.339600e-004, 9.882899e-003, -1.535300e-003, -3.010081e-003, 1.541789e-002, -1.967543e-003, -1.317100e-002, -1.756214e-002, -1.408716e-002, 4.098633e-003, 1.058056e-002, -1.357707e-002, -2.369093e-002, -1.035900e-002, -1.469576e-002, -3.820974e-002, -3.730545e-002, -2.612494e-002, -2.715905e-002, -2.074131e-002, -1.044801e-002, -6.346357e-003, -2.192467e-003, -1.310837e-004, 1.344852e-002, 3.640743e-002, 3.092262e-002, 1.140116e-002, 6.597640e-003, 2.366574e-002, 2.204452e-002, -1.956256e-004, -1.502440e-002, -3.361928e-002, -4.226826e-002, -4.401180e-002, -4.899123e-002, -3.536039e-002, -1.904595e-002, -9.375386e-003, -2.115919e-003, 1.620453e-002, 2.684081e-002, 6.099435e-003, 9.790801e-003, 4.045099e-003, 4.749227e-003, 1.589490e-002, 7.128937e-004, 7.651655e-005, 1.496484e-002, -7.782579e-003, -1.896137e-002, -1.874060e-002, -1.302810e-002, 1.158032e-002, 1.538067e-002, -8.622347e-003, -2.387359e-002, -1.249691e-002, -5.123248e-003, -1.544506e-002, -2.153876e-002, -9.879800e-003, 3.456140e-003, 1.496106e-002, 2.369654e-002, 3.174279e-002, 3.415614e-002, 3.578500e-002, 4.395016e-002, 5.827075e-002, 5.044216e-002, 3.693262e-002, 3.123940e-002, 3.367592e-002, 4.935110e-002, 3.884952e-002, 2.219738e-002, 6.377847e-003, -8.421919e-003, -2.655209e-002, -4.009348e-002, -3.907741e-002, -2.538802e-002, -1.716720e-002, -9.509942e-003, 1.138726e-002, 1.989548e-002, 3.163864e-003, 7.685382e-003, 1.770565e-003, 5.364814e-004, 1.049754e-002, 3.299757e-003, 5.985565e-004, 1.586733e-002, -8.014719e-003, -1.792464e-002, -1.016895e-002, -5.696127e-003, 1.167220e-002, 1.032641e-002, -3.899783e-003, -2.182370e-002, -1.561648e-002, 1.571300e-003, 9.459749e-003, 4.312027e-003, 1.373977e-002, 2.927324e-002, 4.472920e-002, 5.321451e-002, 5.637619e-002, 5.207919e-002, 5.103128e-002, 5.315088e-002, 6.164186e-002, 5.556624e-002, 4.711640e-002, 4.141732e-002, 3.432443e-002, 3.692866e-002, 4.889452e-002, 4.216576e-002, 3.244026e-002, 1.668500e-002, -2.423802e-003, -2.082135e-002, -2.907260e-002, -2.437829e-002, -1.861830e-002, -1.114286e-002, 3.761428e-003, 9.369430e-003, -2.980441e-003, -4.410021e-004, -6.946036e-003, -5.515117e-003, 4.178345e-003, 4.222126e-003, 5.084854e-003, 1.574594e-002, -1.089087e-002, -1.494962e-002, 4.785369e-004, 2.334329e-003, 2.399087e-003, 1.223910e-002, 6.867473e-004, -1.994491e-002, -1.504728e-002, 2.918033e-003, 1.742344e-002, 1.826106e-002, 2.749063e-002, 4.162826e-002, 5.227736e-002, 5.233130e-002, 4.842670e-002, 4.385439e-002, 4.331435e-002, 4.565279e-002, 5.324043e-002, 5.255380e-002, 4.843224e-002, 4.378631e-002, 3.286808e-002, 1.576020e-002, 1.542984e-002, 2.477460e-002, 3.008838e-002, 1.924559e-002, 3.589035e-003, -1.273312e-002, -2.102516e-002, -1.897117e-002, -1.325062e-002, -7.796180e-003, -5.107989e-004, -1.189646e-003, -3.973214e-003, -6.417562e-003, -9.339233e-003, -1.047630e-003, -4.632789e-003, -1.474863e-003, 1.076669e-002, 1.441973e-002, 2.108101e-003, -7.909309e-003, 9.214239e-003, 1.632987e-002, 2.328353e-003, 1.421917e-002, 5.380721e-003, -1.595876e-002, -1.728097e-002, 3.225791e-004, 2.020073e-002, 2.070607e-002, 2.716436e-002, 2.950416e-002, 3.220020e-002, 2.546684e-002, 1.434520e-002, 3.526353e-003, 1.390838e-002, 2.696433e-002, 3.091193e-002, 3.120474e-002, 3.050372e-002, 3.374703e-002, 2.960276e-002, 2.515895e-003, -1.498845e-002, -2.149676e-002, -5.680006e-003, 3.923882e-003, 2.070993e-003, -9.157466e-003, -1.376119e-002, -1.499777e-002, -1.470399e-002, -7.325846e-003, -5.423668e-004, -4.636371e-003, -7.027812e-003, -8.276095e-004, -7.701216e-003, 2.982065e-003, -1.375734e-002, -5.939962e-003, 1.579820e-002, -1.622306e-002, 2.542494e-005, -7.882601e-003, 9.647281e-003, 2.616897e-002, 4.417702e-003, 1.004943e-002, 8.766991e-003, -7.733604e-003, -1.168324e-002, -8.370872e-003, 1.157604e-002, 1.786342e-002, 2.038972e-002, 1.606232e-002, 4.918010e-003, -1.073319e-002, -2.318647e-002, -2.294315e-002, -1.329743e-002, -1.616630e-003, 2.722731e-003, 1.565480e-003, -2.160774e-003, 2.914599e-003, 1.380478e-002, 2.238826e-003, -3.240336e-002, -5.424943e-002, -4.728133e-002, -3.476233e-002, -2.441457e-002, -2.120687e-002, -1.737468e-002, -1.341885e-002, -9.826618e-003, -5.767943e-003, -7.035822e-003, -1.206012e-002, -1.039904e-002, 2.985900e-003, 1.468528e-005, 8.097881e-003, -1.555776e-002, -


© ISO/IEC 2004 — All rights reserved
--`,,```,,,,````-`-`,,`,,`,`,,`---

Copyright International Organization for Standardization
Provided by IHS under license with ISO
No reproduction or networking permitted without license from IHS
Not for Resale

6.210798e-003, 2.183519e-002, -2.210645e-002, -3.264959e-003, -1.345104e-002, 7.626172e-003, 2.947807e-002, 1.415237e-003, -6.893788e-003, 9.236694e-003, 3.075361e-003, -3.218559e-003, 3.330462e-005, 8.626169e-003, 8.642263e-003, 6.205682e-003, -4.043153e-003, -1.887857e-002, -3.142019e-002, -3.410491e-002, -2.190796e-002, -2.207932e-002, -2.258500e-002, -1.751631e-002, -1.849917e-002, -2.370487e-002, -1.984416e-002, -1.295399e-002, -2.874821e-003, -2.438504e-002, -6.453194e-002, -7.007950e-002, -6.222342e-002, -4.882439e-002, -3.777861e-002, -2.532595e-002, -1.330645e-002, -6.359032e-003, -5.796614e-003, -9.658668e-003, -1.416161e-002, -1.261758e-002, 6.540599e-003, 1.003043e-002, 5.439188e-003, -1.443597e-002, -1.213284e-003, 6.568430e-003, -1.829992e-002, 2.651000e-003, -1.127558e-002, 4.737744e-004, 1.869784e-002, -1.208915e-003, -1.558248e-002, 4.646382e-004, 8.977596e-003, 5.589040e-003, 1.231145e-002, 2.445963e-002, 2.376454e-002, 1.717816e-002, 5.420672e-003, -8.447502e-003, -1.444883e-002, -7.171934e-003, 8.027503e-003, -1.011943e-002, -2.206625e-002, -1.841385e-002, -1.833713e-002, -1.423954e-002, -1.388782e-002, -2.402484e-002, -1.953479e-002, -1.168397e-002, -4.050397e-002, -6.196136e-002, -6.154184e-002, -4.847926e-002, -2.922416e-002, -8.741041e-003, 5.154596e-004, 3.787960e-003, -1.242409e-004, -5.984527e-003, -1.846777e-002, -1.347953e-002, 7.048500e-003, 1.210460e-002, 1.320699e-003, -7.904043e-003, -5.566354e-004, -1.434874e-003, -1.592055e-002, 1.031833e-002, -9.879519e-005, -3.424126e-003, 1.092589e-002, -1.074976e-002, -2.336221e-002, -3.481278e-003, 1.285607e-002, 1.246470e-002, 2.025488e-002, 3.876459e-002, 4.117656e-002, 3.085867e-002, 2.218348e-002, 1.168416e-002, 9.763284e-003, 2.044504e-002, 2.392337e-002, 4.087474e-003, -1.561608e-002, -1.933694e-002, -2.555276e-002, -1.146417e-002, -1.758183e-002, -2.969728e-002, -3.373437e-002, -1.640280e-002, -1.519518e-002, -2.667836e-002, -2.990133e-002, -2.412477e-002, -5.970929e-003, 1.363592e-002, 1.480052e-002, 1.307437e-002, 5.142276e-003, -4.972784e-003, -1.959112e-002, -8.842232e-003, 5.780959e-003, 4.401421e-003, -4.148304e-003, 5.528236e-003, 6.848971e-003, -4.101895e-003, -2.291199e-002, 1.130617e-002, 9.835053e-003, 3.589043e-003, 1.228050e-002, -1.178703e-002, -3.212844e-002, -1.162505e-002, 1.334250e-002, 1.343917e-002, 2.240275e-002, 4.625142e-002, 5.675551e-002, 4.380832e-002, 3.531208e-002, 2.707866e-002, 2.774542e-002, 2.870064e-002, 2.232762e-002, 1.027455e-002, -4.348365e-003, -8.042281e-003, -1.236299e-002, -2.007695e-002, -2.706705e-002, -3.329161e-002, -3.257915e-002, -2.499570e-002, -6.882871e-003, 8.506955e-004, -7.799667e-004, 4.990560e-003, 1.829121e-002, 2.994551e-002, 2.396626e-002, 2.080674e-002, 8.664020e-003, -1.082316e-003, -1.313042e-002, -3.274179e-003, 5.268829e-003, 9.389325e-004, -2.640442e-003, 1.596590e-002, 7.893349e-003, -1.546886e-002, -3.790697e-002, -1.066599e-003, 5.266619e-003, 3.976529e-003, 1.042630e-002, -1.927776e-003, -2.600154e-002, -1.936057e-002, 5.678966e-003, 1.198009e-002, 1.493127e-002, 3.987987e-002, 5.884314e-002, 4.365500e-002, 3.305926e-002, 3.252331e-002, 3.288296e-002, 2.561573e-002, 1.767920e-002, 1.496098e-002, -2.154584e-003, -1.508894e-002, -2.000387e-002, -2.525940e-002, -4.061030e-002, -4.636897e-002, -3.780766e-002, -2.893531e-002, -9.711221e-003, 5.735329e-003, 1.216468e-002, 2.022589e-002, 3.145327e-002, 3.252794e-002, 2.258850e-002, 2.270572e-002, 9.164931e-003, -1.163814e-003, -8.090006e-003, 2.072904e-003, 3.981018e-003, -7.383834e-003, 1.946491e-003, 1.780644e-002, 2.796086e-003, -2.693207e-002, -4.128439e-002, -7.150195e-003, -1.505246e-003, -2.294569e-003, 1.793163e-003, 3.913620e-003, -6.673604e-003, -1.863400e-002, 3.768661e-003, 8.308006e-003, 4.112890e-003, 2.158144e-002, 4.752371e-002, 3.744953e-002, 2.365420e-002, 2.534012e-002, 2.556766e-002, 1.860806e-002, 8.873094e-003, 4.087003e-003, -7.374895e-003, -1.708201e-002, -2.064958e-002, -3.132242e-002, -5.461477e-002, -5.136276e-002, -3.636361e-002, -2.718945e-002, -1.389684e-002, -1.046333e-003, 1.370509e-002, 2.471698e-002, 3.337065e-002, 2.881758e-002, 1.660657e-002, 1.764765e-002, 6.706166e-003, -4.165857e-004, -8.183718e-003, 8.583748e-003, 1.704013e-003, -8.440933e-003, 9.512671e-003, 1.814965e-002, -1.417270e-003, -2.887468e-002, -4.247787e-002, -3.224043e-002, -6.804201e-003, -6.984243e-003, -1.296423e-002, 6.496211e-003, 1.260672e-002, -9.543420e-003, 2.701099e-003, 4.775478e-003, -7.168483e-003, 1.455283e-003, 2.891076e-002, 2.336914e-002, 5.988940e-003, 4.816434e-003, 1.961688e-002, 1.869173e-002, 1.300628e-002, 1.270510e-002, 6.231044e-003, -2.851740e-003, -9.581263e-003, -2.109118e-002, -3.427707e-002, -2.897110e-002, -1.828593e-002, -1.084979e-002, -3.507351e-003, 2.780322e-003, 1.172920e-002, 1.943150e-002, 2.317173e-002, 1.763111e-002, 1.065071e-002, 8.761428e-003, 5.454028e-003, 3.955726e-003, -1.158346e-002, 4.384956e-003, -4.514926e-003, -8.695460e-003, 7.552619e-003, 1.804019e-002, -7.390760e-003, -3.212335e-002, -2.281746e-002, -7.212305e-003, -2.197527e-003, -1.181639e-002, -2.483520e-002, -1.329725e-002, 6.124010e-003, -3.464659e-004, 6.215335e-003, 1.227056e-002, -8.636745e-003, -1.085434e-002, 1.110544e-002, 7.296229e-003, -1.722164e-002, -2.017785e-002, 7.827435e-003, 2.844468e-002, 3.541684e-002, 3.700329e-002, 2.439145e-002, 5.529505e-003, -9.745513e-003, -1.538840e-002, -1.549244e-002, -9.667132e-003, 2.926048e-003, 1.371671e-002, 2.233172e-002, 1.600493e-002, 4.092516e-003, 5.809285e-003, 8.216734e-003, 5.339226e-003, 6.750238e-003, 3.998128e-003, 1.003647e-002, 8.034625e-003, -1.330262e-002, 3.633279e-003, -8.665614e-003, -1.917901e-002, -1.590561e-003, 1.204281e-002, -1.610979e-002, -3.199912e-002, -1.843424e-002, 1.999111e-003, 6.425463e-003, -5.023697e-003, -2.220861e-002, -2.829781e-002, -9.898748e-003, 7.812203e-003, 8.252897e-003, 2.087329e-002, -2.156315e-003, -1.562213e-002, -7.409032e-004, -8.860421e-003, -

© ISO/IEC 2004 — All rights reserved


Copyright International Organization for Standardization
Provided by IHS under license with ISO
No reproduction or networking permitted without license from IHS
Not for Resale

4.170980e-002, -5.523872e-002, -2.295896e-002, 2.013806e-002, 4.285633e-002, 4.807876e-002, 3.992736e-002, 2.150078e-002, 2.176834e-003, -4.910739e-003, -8.988186e-003, -1.934590e-003, 1.414553e-002, 2.857939e-002, 3.267285e-002, 1.763545e-002, -3.440435e-003, -8.685595e-003, -4.636104e-003, -3.851105e-003, 6.782675e-004, 1.263638e-004, 1.637452e-002, 1.018649e-002, -1.082678e-002, 3.574235e-003, -1.329439e-002, -2.267472e-002, -3.220738e-003, 6.604319e-003, -1.689380e-002, -2.646444e-002, -1.280072e-002, 8.652164e-003, 1.347736e-002, 8.167455e-003, -1.148602e-002, -3.299154e-002, -1.019940e-002, 8.791453e-003, 2.861187e-003, 1.783048e-002, 7.652699e-003, -1.637826e-002, -1.063545e-002, -1.436231e-002, -4.634625e-002, -6.542482e-002, -4.694026e-002, -7.999470e-003, 2.588349e-002, 4.462736e-002, 4.764736e-002, 3.908295e-002, 2.229454e-002, 1.795010e-002, 9.469396e-003, 7.074776e-003, 1.560395e-002, 1.790199e-002, 1.137769e-002, -1.409932e-003, -1.436375e-002, -1.892222e-002, -1.328661e-002, -8.174254e-003, -2.769822e-003, 3.916790e-004, 2.167285e-002, 6.109316e-003, -2.332615e-003, 1.060217e-002, -4.092871e-003, -1.202366e-002, 5.063960e-003, 1.408801e-003, -1.877057e-002, -1.609546e-002, -1.196481e-002, 5.672516e-003, 2.069140e-002, 2.055199e-002, 6.770176e-003, -2.034152e-002, -6.842076e-003, 5.913573e-003, -5.296426e-003, 3.912885e-003, 1.162170e-002, -1.306665e-002, -1.737571e-002, -1.377838e-002, -2.832081e-002, -3.785080e-002, -2.399872e-002, 1.099026e-003, 2.438672e-002, 3.411370e-002, 3.085977e-002, 2.551767e-002, 1.410768e-002, 1.062395e-002, 6.626447e-003, 9.222020e-003, 1.745849e-002, 2.527210e-002, 2.438734e-002, 1.205963e-002, -3.961657e-003, -9.304828e-003, -8.403048e-003, -9.195437e-003, -1.972933e-003, 9.619603e-003, 1.750052e-002, 2.606966e-004, 8.192035e-003, 1.309657e-002, 8.854328e-004, 4.246801e-003, 9.671032e-003, -6.143389e-003, -1.393269e-002, 5.857350e-003, -1.273912e-002, 2.232693e-003, 1.715620e-002, 3.131923e-002, 2.508984e-002, -5.924628e-003, -7.891189e-003, 8.266933e-003, -1.021245e-002, -1.429255e-002, 4.223666e-003, -1.071260e-002, -2.222188e-002, -1.119578e-002, -7.396885e-003, -7.707018e-003, 4.611130e-003, 1.884524e-002, 3.235524e-002, 3.673392e-002, 3.512619e-002, 3.484538e-002, 3.029221e-002, 2.100759e-002, 1.362606e-002, 1.437987e-002, 2.174812e-002, 3.557564e-002, 3.839166e-002, 2.958602e-002, 1.567629e-002, 1.292493e-003, 8.537731e-005, -3.272322e-003, 4.005617e-003, 1.524817e-002, 9.544745e-003, -9.064557e-003, 2.456604e-003, 8.534498e-003, 4.310191e-003, 1.151312e-002, 1.029369e-002, -9.612422e-003, -6.956013e-003, 1.971370e-002, -1.342572e-002, -2.027060e-003, 6.965078e-003, 2.597162e-002, 3.278846e-002, 3.516535e-003, -9.252992e-003, 8.472132e-003, -9.145544e-003, -3.072290e-002, -1.104308e-002, -6.318619e-003, -2.635885e-002, -1.531783e-002, 1.494954e-003, 4.534847e-003, 5.857020e-003, 6.324402e-003, 1.995264e-002, 2.988199e-002, 3.166686e-002, 2.732923e-002, 1.799385e-002, 8.757529e-003, 2.338235e-003, 1.701281e-003, 8.820964e-003, 2.032176e-002, 2.873894e-002, 2.679111e-002, 1.820158e-002, 6.420326e-003, 4.723979e-003, -1.552735e-004, 1.029502e-002, 1.629758e-002, 1.403956e-003, -8.925874e-003, 2.763671e-003, 1.041813e-002, 1.543755e-003, 8.038520e-003, -3.907763e-004, -1.717163e-002, 1.972343e-003, 3.213065e-002, -1.903180e-002, -1.020417e-002, -7.121350e-003, 1.013265e-002, 2.812161e-002, 2.478364e-003, -1.229671e-002, 7.899553e-005, -6.074333e-003, -2.320123e-002, -1.146065e-002, 7.516751e-004, -1.985245e-002, -2.308725e-002, -4.557563e-003, 7.358481e-003, 6.970078e-003, 2.837689e-003, 8.899295e-003, 2.174594e-002, 2.832935e-002, 2.795177e-002, 2.081053e-002, 1.286808e-002, 8.253189e-003, 3.405855e-003, 2.755229e-003, 6.750502e-003, 1.439963e-002, 1.922599e-002, 1.645942e-002, 1.016833e-002, 3.334633e-003, 3.837762e-003, 1.024228e-002, 1.496056e-002, 1.907556e-003, -8.524572e-003, 3.005507e-003, 7.711775e-003, 8.503608e-003, 1.043920e-002, -1.145246e-002, -2.532331e-002, 4.826729e-003, 3.286565e-002, -1.829984e-002, -1.509077e-002, -5.130559e-002, -9.658891e-003, 9.908784e-003, -1.266221e-003, -1.472992e-002, -4.072159e-003, 1.368794e-003, -4.093848e-003, -3.395467e-003, 1.110510e-002, -1.167498e-002, -2.532914e-002, -8.570216e-003, 1.016245e-002, 1.150012e-002, 8.768514e-003, 8.600657e-003, 1.540298e-002, 2.349916e-002, 2.533941e-002, 2.146524e-002, 1.246291e-002, 4.359313e-003, 7.426369e-004, 9.067280e-004, 1.869129e-003, 7.749120e-003, 1.455562e-002, 1.254736e-002, 7.480408e-003, -1.270791e-003, 2.953567e-003, 6.763159e-003, 1.099453e-002, 4.707711e-003, -3.026196e-003, -1.368241e-002, -6.894951e-003, 1.165444e-002, 1.700257e-002, -1.359329e-002, -2.266746e-002, 6.249044e-003, 2.569426e-002, -6.963395e-003, -7.161131e-003, -4.895461e-002, -9.292382e-003, 8.014157e-003, 1.045288e-003, -1.015665e-002, -2.985825e-003, 8.817960e-003, 5.824713e-003, -2.508782e-003, 4.857870e-003, -1.305708e-003, -1.343818e-002, -1.789111e-003, 1.601758e-002, 1.796843e-002, 1.173609e-002, 5.755217e-003, 9.917287e-003, 2.109025e-002, 2.398783e-002, 1.897483e-002, 8.612126e-003, 1.987508e-003, 6.713203e-004, 1.842074e-003, 2.355515e-003, 6.346260e-003, 9.793545e-003, 7.424572e-003, 2.565633e-003, -7.124506e-003, 4.052476e-004, 5.874518e-003, -1.555854e-003, 2.652494e-003, -1.196783e-003, -1.819789e-002, -1.124574e-002, 8.218578e-003, 1.442789e-002, -6.791804e-003, -1.738360e-002, 1.487048e-003, 7.982517e-003, 9.583917e-003, 1.302041e-002, -2.978771e-002, 1.645171e-003, 1.518046e-002, -2.400828e-003, -7.310043e-003, -7.051195e-003, 1.520470e-003, -1.219286e-003, -1.806735e-002, -8.137024e-003, 1.570736e-003, 7.158888e-005, 5.445827e-003, 1.846139e-002, 2.388055e-002, 1.338877e-002, 1.663263e-003, 2.281528e-003, 1.221858e-002, 1.782066e-002, 2.267567e-002, 1.753091e-002, 1.322878e-002, 1.242547e-002, 1.098877e-002, 9.048832e-003, 8.968839e-003, 5.810038e-003,


© ISO/IEC 2004 — All rights reserved

Copyright International Organization for Standardization
Provided by IHS under license with ISO
No reproduction or networking permitted without license from IHS
Not for Resale

5.590019e-004, -5.271149e-003, -1.271490e-002, -2.770478e-003, -2.031268e-003, -9.885491e-003, -2.584830e-003, -7.436027e-003, -9.910273e-003, -5.817963e-003, -8.447143e-004, 4.139231e-003, 5.972196e-004, -2.865744e-003, 5.793543e-003, -1.028654e-002, 1.981252e-002, 2.196594e-002, -1.405346e-002, 1.168696e-002, 1.213656e-002, -5.819887e-003, -1.568271e-002, -1.057112e-002, -3.597776e-003, -2.186104e-003, -1.817015e-002, -1.177229e-002, 3.395695e-003, 6.014717e-003, 4.971123e-003, 1.554325e-002, 2.124249e-002, 1.339892e-002, -5.776495e-003, -1.436825e-002, -5.832096e-003, 5.360304e-003, 1.824451e-002, 2.180716e-002, 2.015344e-002, 2.099146e-002, 2.212615e-002, 1.748531e-002, 1.105133e-002, 3.091950e-003, 2.028416e-003, -7.969353e-003, -1.415045e-002, -5.181823e-003, -9.959874e-003, -1.141442e-002, -3.329369e-003, -1.113308e-002, -3.044697e-003, 6.189750e-003, -2.495993e-003, -7.497495e-003, -8.784470e-004, 1.195840e-002, 2.094030e-002, -1.356575e-002, 1.445970e-002, 2.715297e-002, -7.187143e-003, 1.022651e-003, -1.393382e-003, -7.978307e-003, -6.942537e-003, -4.524439e-004, -1.078046e-002, -1.334458e-003, -4.473884e-003, -8.225557e-003, 3.218197e-003, 4.208984e-003, -1.078385e-002, -1.834608e-003, 1.096541e-002, 9.739317e-004, -1.704441e-002, -3.268004e-002, -2.954383e-002, -1.643652e-002, -6.110084e-004, 7.251563e-003, 1.145309e-002, 1.284295e-002, 1.231732e-002, 6.284087e-003, 2.504455e-003, 1.339680e-004, -2.057990e-003, -1.342819e-002, -1.216048e-002, -8.888061e-003, -1.092937e-002, -6.332315e-003, -1.120729e-003, -1.593524e-002, -5.200876e-004, 1.104734e-002, 1.650855e-003, -9.913398e-003, -5.610602e-003, 1.554096e-002, 1.738273e-002, -1.392332e-002, 9.037259e-003, 1.873363e-002, -1.653715e-002, 8.453537e-004, 2.252337e-003, 9.081698e-003, 2.191955e-002, 1.217388e-002, -4.159801e-003, 9.050514e-003, 7.988919e-003, 3.649336e-004, 1.196412e-003, 2.674252e-003, -1.076144e-002, -1.557167e-002, -4.158911e-003, -4.942350e-003, -1.566534e-002, -3.109574e-002, -3.513826e-002, -2.914163e-002, -1.268972e-002, -5.881068e-006, 8.128216e-003, 8.259781e-003, 6.781915e-003, 2.634692e-003, 5.307202e-003, 3.263031e-003, 6.462783e-004, -1.108195e-003, -1.352742e-003, -4.841307e-003, -4.654407e-004, 6.405916e-003, 4.935165e-003, -1.331198e-002, -1.090792e-002, 1.039529e-002, 2.271120e-003, -8.472257e-003, -1.245318e-002, -3.813069e-003, 7.988513e-005, -3.145503e-002, 8.266704e-004, 1.397383e-002, 1.278378e-002, -1.728026e-002, -1.030321e-002, 8.624479e-003, 2.313509e-002, 1.054305e-002, -1.709723e-002, 6.302625e-003, 1.390643e-002, 3.309184e-003, 5.282299e-004, 3.917098e-003, -3.509516e-003, -8.554200e-003, -9.956725e-003, -7.781198e-003, -4.841721e-003, -1.110240e-003, 9.696709e-004, 6.558895e-004, 6.097657e-003, 1.123049e-002, 1.074287e-002, 8.000410e-003, 6.866978e-003, 8.781938e-003, 1.212561e-002, 1.075824e-002, 9.684799e-003, 8.542572e-003, 2.424497e-003, -3.469749e-003, 4.497439e-003, 1.308699e-002, 1.363393e-002, -2.932934e-003, -1.504427e-002, 6.257178e-003, 3.782599e-003, -7.341007e-003, -1.080144e-002, 1.678613e-003, -3.676283e-004, -3.323850e-002, -9.531607e-003, 8.360975e-003, 1.400817e-002, -9.350936e-003, -4.957490e-003, 1.123793e-002, 2.524340e-002, 9.135850e-003, -2.158606e-002, 3.523341e-003, 1.600290e-002, 3.165547e-003, 3.441937e-003, 8.021175e-003, 7.942292e-003, 6.150143e-003, -9.428455e-004, -6.145598e-003, -3.697960e-003, 9.115884e-004, -8.857679e-004, -2.702368e-003, -1.695499e-003, 1.095451e-003, 2.649946e-003, 2.897873e-003, 3.343334e-003, 8.356586e-003, 1.373087e-002, 1.213586e-002, 8.363706e-003, 6.786971e-003, 2.313975e-003, 2.912963e-003, 5.346393e-003, 9.448661e-003, 1.940402e-002, 5.402426e-003, -1.030207e-002, 7.582220e-003, 5.701713e-003, -1.144470e-002, -1.562072e-002, 7.069369e-004, 8.334816e-003, -1.599667e-002, -8.420526e-003, 1.304898e-002, 1.906451e-002, -1.389003e-002, -1.398676e-002, -3.104735e-003, 9.230733e-003, -8.788610e-003, -1.892571e-002, -6.299144e-003, 3.982982e-003, -1.141838e-002, -1.819576e-002, -5.777667e-003, -4.073743e-003, -4.640397e-003, -3.081873e-003, -6.758861e-003, -5.528840e-003, -1.181600e-003, -4.348284e-003, -8.566159e-003, -1.124093e-002, -8.834143e-003, -3.986679e-003, -3.953589e-005, 9.937151e-004, 1.872851e-003, 5.631710e-003, 1.509070e-003, -3.322787e-003, -5.974655e-003, -5.195866e-003, 5.978487e-003, 5.538735e-003, -1.065411e-003, 7.874662e-003, 4.821494e-003, -5.147921e-003, 3.526720e-003, 6.414582e-003, -1.067635e-002, -9.011348e-003, 5.559809e-003, 1.486270e-002, -1.762273e-003, -7.168688e-003, 1.751415e-002, 1.943490e-002, 3.511316e-003, 4.406510e-003, 1.521901e-004, 5.507865e-003, 5.190770e-003, 2.639865e-003, 1.030691e-002, 2.477478e-002, 5.797421e-003, -6.519971e-003, 5.418161e-003, 5.347430e-003, -4.303344e-003, -5.256901e-003, -1.988177e-003, 3.685917e-003, 3.999294e-003, 1.377100e-003, 5.580828e-004, -1.367813e-003, 8.065652e-004, 3.113930e-003, 3.837773e-003, 2.245913e-003, -4.775679e-004, -7.042148e-003, -1.700793e-002, -2.509069e-002, -2.173885e-002, -1.393363e-002, -6.945819e-004, -2.846834e-003, -1.056159e-002, -9.366230e-003, -1.266976e-002, -9.899291e-003, -6.048230e-003, -6.454927e-003, -7.812981e-003, 1.463209e-003, 1.684010e-002, 2.094898e-002, 8.417654e-003, -1.008441e-002, 1.136313e-002, 1.202007e-002, -2.522948e-003, -5.916319e-003, -1.020567e-002, -1.190456e-002, -1.074611e-002, -5.109999e-003, -7.981381e-004, 9.768880e-003, 2.797441e-003, -1.503677e-002, -7.237829e-003, -5.559989e-003, -1.238314e-002, -1.252863e-002, -1.124111e-002, -5.885341e-003, -1.001973e-003, 4.548967e-003, 6.873754e-003, 9.937595e-003, 1.394577e-002, 1.671427e-002, 1.691142e-002, 1.418853e-002, 4.839727e-003, -5.859436e-003, -1.606863e-002, -1.310216e-002, -3.623302e-004, 1.452375e-002, 2.443323e-002, 1.822262e-002, 7.598847e-003, 8.677848e-003, 1.441270e-003, -8.753642e-004, 4.726592e-003, -3.183404e-003, 3.898478e-003, 1.181480e-002, 1.579450e-002, 1.606698e-002, 5.406682e-003},

© ISO/IEC 2004 — All rights reserved


Copyright International Organization for Standardization
Provided by IHS under license with ISO
No reproduction or networking permitted without license from IHS
Not for Resale

{5.963682e-003, 1.193388e-002, -7.186841e-003, -1.124666e-002, -1.482623e-003, 6.783131e-003, 1.407842e-002, 1.472655e-002, 1.420159e-002, 5.902236e-003, -7.244568e-003, -1.745511e-002, -2.045160e-002, -1.042963e-002, -5.009964e-003, 6.175199e-004, 1.080649e-002, 1.568046e-002, 1.499065e-002, 1.083782e-002, 8.315984e-003, 6.004753e-003, 1.449073e-003, -3.404178e-003, -2.112350e-003, 4.639858e-003, 9.246487e-003, 1.289816e-002, 1.583131e-002, 1.207573e-002, 7.548018e-003, 5.585290e-003, 7.911330e-003, 1.193074e-002, 1.719078e-002, 3.154416e-002, 3.451403e-002, 2.656219e-002, 6.465001e-003, -5.579667e-003, -5.121411e-004, 1.166404e-002, 1.641021e-002, 6.986561e-003, 1.867616e-002, 1.912979e-002, 2.465620e-003, 1.057010e-002, -1.587546e-002, -1.574759e-002, 2.273336e-003, 1.193399e-002, 1.523965e-002, 1.779234e-002, 9.985145e-003, 6.534833e-003, -1.063610e-002, -1.778388e-002, -1.245023e-002, -1.065334e-002, -1.273320e-002, -1.222699e-002, -8.935204e-003, -2.449905e-003, 1.148688e-003, -6.746747e-003, -1.953899e-002, -2.966234e-002, -4.078974e-002, -4.321780e-002, -4.375326e-002, -3.244304e-002, -1.883499e-002, -1.087846e-002, -2.852268e-003, -1.582776e-003, -9.160498e-003, -1.000369e-002, -7.410313e-003, -2.120254e-003, -3.054566e-003, -9.943254e-003, -3.405362e-003, 1.639586e-003, -7.015710e-003, -2.546057e-002, -2.355984e-002, -5.720540e-003, 3.949935e-003, 3.898318e-003, 7.011076e-003, 8.899693e-003, -9.699951e-004, 9.565727e-003, -1.697732e-002, -9.969710e-003, 2.044529e-003, 4.789525e-003, 8.690047e-003, 8.331143e-003, 1.002084e-002, 3.297796e-003, -2.425090e-003, -4.169192e-003, 2.815670e-003, 4.317761e-004, -4.592109e-003, -9.349868e-003, 4.550122e-004, 1.096803e-002, 1.570990e-002, 5.561717e-003, -9.158117e-003, -2.343252e-002, -3.363273e-002, -3.504156e-002, -3.161191e-002, -2.154403e-002, -8.853218e-003, 3.816774e-003, 9.581028e-003, 9.530794e-003, 1.105274e-002, 1.111504e-002, 4.927627e-003, 1.956365e-003, 7.156999e-003, 1.830775e-003, -3.478966e-003, 5.996591e-004, 1.151434e-002, 3.380147e-003, -7.742775e-003, 3.206319e-003, 1.327675e-002, 4.462573e-003, -2.224782e-004, -3.502846e-003, -2.019005e-003, 1.099707e-002, -1.618088e-002, -3.247324e-003, 5.689164e-004, -3.214212e-003, 3.652301e-003, 1.280567e-002, 2.581412e-002, 1.980324e-002, 1.856908e-002, 2.520805e-002, 2.224626e-002, 1.624337e-002, 1.184135e-002, 1.852384e-002, 3.200739e-002, 4.062050e-002, 3.692473e-002, 2.960167e-002, 1.646354e-002, 6.406263e-003, -2.282984e-003, -6.833726e-003, -4.385079e-003, 2.675524e-003, 1.257943e-002, 2.638194e-002, 3.643199e-002, 3.504385e-002, 2.831593e-002, 2.430833e-002, 1.883592e-002, 1.196095e-002, 8.546117e-003, 2.228306e-002, 1.907721e-002, 9.711826e-003, 1.176844e-002, 1.567008e-002, 4.909200e-003, 6.626840e-003, 1.816308e-002, 1.524986e-002, 2.184247e-003, -1.001303e-002, -9.897183e-003, 6.708946e-003, -2.137394e-002, -1.346955e-002, -1.277437e-002, -1.332461e-002, -1.091022e-003, 1.745742e-002, 2.264929e-002, 2.087372e-002, 2.138742e-002, 1.867397e-002, 1.421067e-002, 7.911821e-003, 8.366716e-003, 1.197487e-002, 1.490676e-002, 1.553241e-002, 1.315728e-002, 7.880544e-003, -1.541561e-003, -9.109120e-003, -1.949711e-002, -2.694691e-002, -3.082850e-002, -3.017086e-002, -2.132119e-002, -9.980881e-003, 4.767232e-003, 7.133112e-003, 1.676466e-003, -6.140220e-003, -1.288701e-002, -2.117202e-002, -2.169301e-002, -1.281599e-002, 3.193837e-003, -2.374174e-003, -9.043928e-003, 9.628372e-004, -8.654190e-004, -4.558758e-003, 2.006122e-002, 2.252275e-002, 1.239544e-002, -1.435802e-002, -4.416384e-003, 1.575008e-002, -1.478909e-002, -7.627478e-003, -4.056120e-002, -3.925434e-002, -1.224781e-002, -6.229272e-003, -8.073913e-003, -9.175378e-003, -1.082769e-002, -6.054628e-003, -7.831666e-003, -1.359528e-002, -1.755662e-002, -2.335349e-002, -2.066053e-002, -1.967073e-002, -1.817214e-002, -1.633156e-002, -2.018237e-002, -2.744777e-002, -3.737641e-002, -4.762499e-002, -5.455728e-002, -5.271323e-002, -3.964945e-002, -2.916348e-002, -2.010572e-002, -1.662058e-002, -1.832571e-002, -1.972198e-002, -2.080068e-002, -2.296436e-002, -2.625282e-002, -2.317537e-002, -7.584397e-003, -2.550055e-003, -4.975979e-003, -4.169088e-003, -5.827287e-003, -1.121524e-002, 1.100453e-002, 4.859883e-003, 4.054390e-003, -2.997410e-002, 2.425093e-003, 2.396434e-002, -6.847759e-003, 2.058781e-003, -3.345473e-002, -1.855413e-002, -2.260607e-003, 1.401146e-003, -1.124966e-003, 3.222420e-004, 1.120480e-002, 1.959287e-002, 1.499207e-002, 2.905008e-003, -4.689301e-003, -6.426219e-003, -2.341456e-003, -2.931578e-003, 6.628008e-004, 5.134937e-003, 1.819432e-003, -5.525429e-003, -1.692068e-002, -2.868600e-002, -3.516576e-002, -2.824140e-002, -1.303731e-002, -3.324470e-004, 6.221273e-003, 6.148687e-003, -2.917838e-004, -9.212330e-003, -8.544915e-003, -3.469322e-003, -3.614399e-004, -3.118990e-003, 3.440961e-003, 4.981532e-003, 6.322355e-003, 3.932914e-003, 4.661651e-003, 5.401758e-004, -4.486206e-003, 3.934677e-003, 8.982773e-003, -2.252477e-002, 1.335895e-002, 3.340129e-002, -3.873947e-003, 1.046822e-002, -1.619563e-002, -5.539250e-003, -2.857318e-003, 1.997838e-003, 5.481619e-003, 1.258274e-002, 2.374471e-002, 2.326269e-002, 2.244978e-002, 1.390890e-002, 1.062361e-002, 9.585287e-003, 7.709816e-003, 4.813339e-003, 8.567267e-003, 1.516001e-002, 1.471254e-002, 7.025912e-003, -6.620756e-003, -2.148002e-002, -2.950554e-002, -2.468768e-002, -9.153696e-003, 1.273758e-002, 2.493479e-002, 2.918862e-002, 2.696981e-002, 1.457320e-002, 6.967250e-004, 6.505613e-003, 1.624705e-002, 1.558808e-002, 1.697614e-002, 1.827959e-002, 1.180801e-002, 6.619015e-003, 1.197720e-002, 1.083462e-002, -9.294867e-003, 5.660086e-004, 5.686607e-003, -1.831334e-002, 2.098658e-002, 3.765221e-002, 3.611969e-003, 2.797162e-002, 6.733070e-004, -2.788682e-003, -1.135370e-003, 1.108586e-003, 6.426029e-003, 1.558647e-002, 1.287500e-002, 1.494172e-002, 2.107621e-002, 1.698227e-002, 1.494924e-002, 1.033604e-002, -


© ISO/IEC 2004 — All rights reserved

Copyright International Organization for Standardization
Provided by IHS under license with ISO
No reproduction or networking permitted without license from IHS
Not for Resale

2.238650e-003, -7.764460e-003, 9.285706e-004, 1.272607e-002, 1.684160e-002, 9.585414e-003, -3.424659e-003, -1.855119e-002, -2.744671e-002, -2.262576e-002, -8.287184e-003, 1.344288e-002, 2.907240e-002, 3.331390e-002, 3.630137e-002, 3.019563e-002, 1.822657e-002, 1.369009e-002, 1.959561e-002, 2.004648e-002, 2.286271e-002, 2.513281e-002, 1.827655e-002, 3.983122e-004, 1.267996e-002, 1.450624e-002, -9.741865e-003, -7.823323e-003, -1.414833e-003, -1.941562e-002, 2.339375e-002, 3.844629e-002, 1.158664e-002, 4.541342e-002, 8.575090e-003, -8.763177e-004, -2.755549e-003, -2.778820e-004, 4.918312e-003, -6.830700e-003, -9.327916e-003, 7.606979e-003, 1.483318e-002, 1.804726e-002, 1.230855e-002, 1.226993e-003, -9.652688e-003, -1.273491e-002, -1.193163e-003, 1.136726e-002, 1.608398e-002, 1.596809e-002, 5.190437e-003, -1.196525e-002, -2.053161e-002, -1.219329e-002, -2.412327e-004, 1.142975e-002, 2.071089e-002, 2.674612e-002, 3.088426e-002, 2.983697e-002, 2.457779e-002, 1.817771e-002, 2.514901e-002, 2.270970e-002, 1.231535e-002, 1.668881e-002, 2.110164e-002, 2.766940e-003, 2.997599e-004, 1.563085e-002, -4.685021e-003, -7.040632e-003, -2.263035e-002, -1.786370e-002, 2.221221e-002, -1.198822e-002, 1.784019e-002, 5.143477e-002, 9.895352e-003, -2.663467e-003, -3.731309e-003, -4.084869e-003, -1.007992e-002, -2.754218e-002, -1.574884e-002, 1.860772e-003, 9.342309e-003, 7.281321e-003, -3.801929e-004, -9.962040e-003, -1.441333e-002, -1.392662e-002, -3.341676e-003, 1.171593e-002, 2.093344e-002, 2.463980e-002, 2.033168e-002, 5.428003e-003, -2.601666e-003, 1.215205e-003, 9.014602e-003, 1.352416e-002, 1.801930e-002, 1.944452e-002, 2.239563e-002, 2.216723e-002, 1.576057e-002, 1.226268e-002, 1.704789e-002, 2.185860e-002, 2.652190e-003, -4.346873e-003, 9.888159e-003, 1.108099e-002, -1.413990e-002, 9.386046e-003, 1.528919e-003, 3.398824e-003, -1.197629e-002, -1.204222e-002, 2.003998e-002, -1.769877e-002, 2.242422e-002, 5.155812e-002, 5.738536e-003, -5.828344e-003, -6.175428e-003, -8.260190e-003, -2.382031e-002, -3.405922e-002, -1.357136e-002, 4.458739e-003, 1.974132e-003, -5.442561e-003, -1.158583e-002, -1.357053e-002, -1.459194e-002, -1.173619e-002, -2.148999e-003, 1.169758e-002, 2.566555e-002, 3.255851e-002, 3.253654e-002, 2.031864e-002, 1.534972e-002, 2.008793e-002, 2.242314e-002, 2.423323e-002, 2.767188e-002, 2.172767e-002, 1.790416e-002, 1.373533e-002, 7.173892e-003, 7.198478e-004, 4.640606e-003, 1.373779e-002, 6.795577e-003, -1.567728e-002, -5.783069e-003, 1.680579e-002, -6.963188e-003, 3.242025e-003, 9.066988e-003, 9.592251e-003, -5.444336e-003, -2.771707e-003, 1.810709e-002, -1.913929e-002, 2.658767e-002, -2.398043e-004, 5.206224e-004, -8.351080e-003, -1.450594e-002, -1.781623e-002, -2.493605e-002, -2.504863e-002, -6.202566e-003, -9.860168e-004, -1.220911e-002, -2.031700e-002, -1.830859e-002, -1.468745e-002, -1.556869e-002, -1.221491e-002, -2.558363e-003, 1.012153e-002, 2.575565e-002, 3.667720e-002, 3.682099e-002, 2.833791e-002, 2.593285e-002, 2.825264e-002, 2.788113e-002, 2.844210e-002, 2.910503e-002, 2.514855e-002, 2.233163e-002, 1.110872e-002, -3.355453e-004, -9.670229e-003, -9.367758e-003, 4.847519e-003, 8.061447e-003, -1.228914e-002, -1.909928e-002, 4.178153e-003, 1.795916e-003, -4.241881e-003, 7.856302e-003, 7.146390e-003, -3.071935e-003, 5.437748e-003, 1.501920e-002, -1.801523e-002, 1.723641e-002, -1.268381e-002, -1.387197e-004, -1.056130e-003, -1.684875e-002, -2.126805e-002, -1.509496e-002, -7.084209e-003, 4.960128e-004, -1.429236e-002, -2.477818e-002, -2.502640e-002, -1.911972e-002, -1.580008e-002, -1.504236e-002, -1.332938e-002, -7.455948e-003, 2.134080e-003, 1.800779e-002, 2.567340e-002, 2.802889e-002, 2.547054e-002, 2.150664e-002, 2.355400e-002, 2.267410e-002, 2.485600e-002, 2.091689e-002, 1.605882e-002, 1.552954e-002, 9.370792e-003, -3.735826e-003, -1.709072e-002, -1.647492e-002, -7.131067e-003, 7.879192e-003, -4.696402e-003, -1.714385e-002, -2.068020e-003, 5.656237e-004, -7.999838e-003, 2.513687e-003, 6.724932e-003, -4.503940e-003, 1.178918e-002, 9.763049e-003, -2.633504e-002, 7.006413e-003, -2.033013e-002, 2.032064e-003, 5.062535e-003, -1.565100e-002, -1.027796e-002, 3.652649e-003, 9.721316e-003, 2.173227e-003, -2.339808e-002, -2.787431e-002, -1.866822e-002, -1.194527e-002, -1.117370e-002, -1.189788e-002, -1.703018e-002, -1.743350e-002, -1.017214e-002, 1.901755e-003, 7.837408e-003, 9.123473e-003, 8.695580e-003, 6.289349e-003, 9.386792e-003, 9.186194e-003, 1.321661e-002, 1.104856e-002, 8.104641e-003, 9.818727e-003, 6.594182e-003, -4.740106e-003, -1.821663e-002, -2.464936e-002, -1.270511e-002, 6.261614e-003, 1.457203e-003, -7.315028e-003, -2.545310e-003, -6.944057e-005, -6.734655e-003, -3.930170e-003, -3.296741e-002, 2.120579e-003, 1.473548e-002, 5.890438e-003, -2.902516e-002, -6.944073e-004, -2.667773e-002, -3.659182e-005, 4.588378e-003, -1.030387e-002, 3.129439e-003, 1.743230e-002, 1.432617e-002, -3.346210e-003, -2.501526e-002, -1.768239e-002, -3.805618e-003, 3.389077e-003, 1.325710e-003, -7.423983e-003, -1.893291e-002, -2.683915e-002, -2.072706e-002, -1.221055e-002, -7.294382e-003, -4.179129e-003, -2.953185e-003, -5.073857e-003, -4.740886e-003, -5.518297e-003, -2.537146e-003, 3.532341e-004, 3.562434e-003, 7.145622e-003, 8.593539e-003, 2.393524e-003, -1.250721e-002, -2.813691e-002, -2.059432e-002, -2.935764e-003, 2.741108e-003, 1.071835e-004, 1.237516e-003, -3.028294e-003, -5.502190e-003, -3.930047e-003, -2.927126e-002, 6.048379e-005, 8.937822e-003, 1.969043e-003, -3.488057e-002, -2.126421e-003, -2.670149e-002, -2.717686e-004, 7.610222e-004, -5.683086e-003, 1.245036e-002, 1.714386e-002, 4.623590e-003, -1.289474e-002, -1.539702e-002, 2.369301e-003, 2.291057e-002, 2.538578e-002, 1.826134e-002, 1.647249e-003, -1.163526e-002, -2.159610e-002, -2.156438e-002, -1.999984e-002, -2.018885e-002, -1.429956e-002, -1.263758e-002, -1.211267e-002, -1.186214e-002, -8.308533e-003, -6.806368e-003, -3.009663e-003, 4.663585e-003, 1.210229e-002, 1.624556e-002,

© ISO/IEC 2004 — All rights reserved
--`,,```,,,,````-`-`,,`,,`,`,,`---


Copyright International Organization for Standardization
Provided by IHS under license with ISO
No reproduction or networking permitted without license from IHS
Not for Resale

1.462645e-002, -8.275828e-005, -2.491211e-002, -2.906080e-002, -1.142129e-002, -6.496662e-003, 1.874746e-005, -6.662544e-004, -6.727739e-003, -8.972215e-003, -1.874803e-003, -2.539180e-002, -1.993058e-003, 6.050021e-003, -3.700733e-003, -3.846622e-002, 5.480236e-003, -2.114043e-002, 2.177064e-003, -1.663762e-003, -2.714415e-003, 1.785336e-002, 1.179902e-002, -9.315230e-003, -1.928096e-002, 3.342277e-003, 3.148323e-002, 4.610318e-002, 3.422611e-002, 1.082030e-002, -1.288823e-002, -2.316717e-002, -2.282720e-002, -1.944577e-002, -2.106106e-002, -2.328705e-002, -1.805280e-002, -1.386642e-002, -8.560941e-003, -8.774602e-003, -1.198956e-002, -1.774704e-002, -1.842390e-002, -1.272587e-002, -2.269634e-003, 1.171561e-002, 1.597314e-002, 1.062508e-002, -1.627812e-002, -3.414683e-002, -1.797343e-002, -1.921273e-002, -1.044780e-002, -3.654044e-003, -1.191857e-002, -1.218422e-002, 1.697276e-003, -2.310607e-002, 7.008645e-004, 5.809626e-005, -5.117582e-003, -3.463734e-002, 1.044957e-002, -2.059690e-002, -2.993566e-003, -6.346643e-003, 1.239242e-003, 1.490544e-002, -1.450784e-003, -3.093075e-002, -2.193342e-002, 2.943308e-002, 6.382796e-002, 5.990222e-002, 2.597005e-002, -1.052059e-002, -3.866852e-002, -5.243598e-002, -5.261512e-002, -3.619964e-002, -2.437559e-002, -2.293501e-002, -1.622494e-002, -7.970295e-003, 2.480529e-003, 3.184353e-003, -1.095493e-002, -2.719797e-002, -3.439340e-002, -3.450787e-002, -1.784664e-002, 1.106947e-002, 3.281757e-002, 3.625750e-002, 1.278734e-002, -2.325007e-002, -2.565791e-002, -3.297820e-002, -2.622160e-002, -1.392848e-002, -2.184248e-002, -1.688916e-002, 6.026025e-003, -1.772440e-002, 9.630225e-003, 1.065427e-003, -6.362509e-003, -2.713510e-002, 9.419132e-003, -1.952196e-002, -1.113220e-002, -1.187437e-002, -2.803784e-004, -1.113280e-003, -2.500378e-002, -4.801472e-002, -9.641280e-003, 4.986468e-002, 7.675001e-002, 7.044922e-002, 4.410016e-002, 1.473065e-002, -1.471661e-002, -3.022183e-002, -3.040757e-002, -2.194001e-002, -1.046987e-002, -1.006017e-002, -1.071912e-002, -6.389476e-003, 2.979567e-003, 1.564275e-003, -1.069327e-002, -1.756420e-002, -1.809866e-002, -1.364957e-002, 4.046067e-003, 3.126679e-002, 5.389918e-002, 6.179494e-002, 4.207987e-002, 5.750176e-003, -1.555762e-002, -3.776120e-002, -3.808448e-002, -2.261705e-002, -2.801728e-002, -2.240142e-002, 5.887037e-003, -1.275396e-002, 1.114561e-002, 1.054114e-003, -9.926934e-003, -1.505949e-002, -3.856075e-002, -1.925656e-002, -1.823291e-002, -1.655837e-002, -8.207826e-003, -1.732769e-002, -3.501758e-002, -3.872137e-002, 9.618572e-003, 4.252561e-002, 5.856458e-002, 5.941267e-002, 4.391390e-002, 2.500372e-002, 7.165061e-003, -3.406381e-003, -3.145631e-003, -3.661345e-003, -1.904784e-003, -8.551300e-003, -1.834569e-002, -2.093328e-002, -2.007525e-002, -1.703304e-002, -7.999799e-003, -6.267948e-003, -1.612561e-002, -2.105796e-002, -9.318075e-003, 1.585645e-002, 4.213766e-002, 5.214024e-002, 4.597898e-002, 2.853475e-002, 1.223051e-002, -1.986586e-002, -4.071802e-002, -2.658993e-002, -3.192566e-002, -2.264796e-002, -6.600367e-004, -1.490450e-002, 9.870164e-003, -5.825713e-003, -4.598682e-002, -1.902422e-003, -3.339894e-002, -1.699337e-002, -1.592321e-002, -1.231948e-002, -7.831260e-003, -2.813897e-002, -2.941599e-002, -2.406634e-002, 1.784433e-003, 2.240049e-002, 4.426978e-002, 4.809900e-002, 3.932812e-002, 2.853735e-002, 1.702006e-002, 6.480395e-003, 1.281783e-004, -5.791174e-003, -6.769282e-003, -1.278889e-002, -2.528833e-002, -3.875110e-002, -5.000977e-002, -4.492678e-002, -1.938794e-002, -2.411583e-002, -4.450031e-002, -5.165117e-002, -4.455032e-002, -1.303619e-002, 1.777459e-002, 3.185931e-002, 3.397016e-002, 2.377928e-002, 1.161482e-002, -6.390244e-003, -2.912810e-002, -1.934917e-002, -2.406194e-002, -1.558717e-002, -8.702469e-003, -2.352430e-002, 7.418433e-003, -1.153838e-002, -3.825199e-002, 1.144085e-002, -1.882061e-002, 7.847645e-003, 7.932924e-003, -2.606318e-003, -1.262080e-003, -2.518102e-002, -1.600201e-002, -1.669224e-002, -1.265445e-002, -4.182497e-003, 1.591813e-002, 1.748803e-002, 1.902073e-002, 2.191885e-002, 2.437452e-002, 2.527026e-002, 1.552700e-002, 3.358237e-003, -3.984004e-003, -2.205961e-003, -1.854195e-002, -3.548497e-002, -5.978027e-002, -5.174054e-002, -5.361284e-003, -7.951455e-003, -2.273133e-002, -4.083117e-002, -5.062274e-002, -2.988721e-002, -3.878169e-003, 8.970973e-003, 8.663908e-003, 7.538172e-003, 5.879086e-003, -2.226121e-003, -1.194419e-002, 4.079997e-003, 3.398670e-003, -6.730878e-003, -1.126283e-002, -2.017455e-002, -3.077296e-002, -3.951507e-002, -2.966923e-002, 2.391492e-002, -4.892806e-003, 2.723454e-002, 1.061275e-002, 3.892694e-003, 3.817411e-003, -1.506459e-002, 1.559326e-003, -2.282485e-002, -3.857668e-002, -2.407118e-002, -1.325735e-003, 1.125509e-002, 4.096668e-002, 5.273638e-002, 5.183170e-002, 5.501338e-002, 4.648292e-002, 2.109897e-002, 8.925976e-003, 3.754377e-003, -1.795935e-002, -3.855321e-002, -5.748085e-002, -2.848805e-002, 2.784786e-002, 3.304866e-002, 3.034422e-002, 9.667597e-003, -6.262752e-003, 8.493527e-004, 3.332406e-003, -5.488100e-003, -4.157675e-003, 6.887779e-003, 3.280617e-003, -6.836409e-003, -3.956342e-003, 2.177399e-002, 2.223176e-002, 8.958672e-003, 5.189611e-004, -9.030498e-003, -2.397888e-002, -3.698825e-002, -3.002847e-002, 3.365606e-002, -5.912817e-003, 1.893613e-002, 3.116504e-003, -3.792458e-003, -5.795049e-003, -2.870549e-002, 1.842259e-003, -1.870400e-002, -3.938621e-002, -3.337673e-002, -2.598174e-002, -1.683556e-002, 1.704861e-002, 1.892418e-002, 1.242239e-002, 4.009321e-002, 4.444381e-002, 3.575887e-002, 3.358637e-002, 2.158460e-003, -1.552488e-002, -2.728368e-002, -3.675522e-002, -1.130790e-002, 5.391931e-002, 5.440209e-002, 5.052292e-002, 1.372309e-002, -6.144203e-003, -1.399375e-002, -1.693718e-002, -2.549858e-002, -2.225908e-002, -2.471903e-003, -8.698194e-003, -2.224470e-002, -2.774538e-002, 2.756154e-003, 9.567449e-003, -3.453101e-004, 2.107014e-004, -1.702680e-002, -2.632052e-002, -1.355180e-002, -1.975563e-002, 3.763085e-002, -


© ISO/IEC 2004 — All rights reserved

--`,,```,,,,````-`-`,,`,,`,`,,`---

Copyright International Organization for Standardization
Provided by IHS under license with ISO
No reproduction or networking permitted without license from IHS
Not for Resale

1.929494e-002, 8.631364e-003, 1.671064e-003, -5.830906e-003, 1.421765e-003, -3.287924e-002, -9.070614e-004, -8.840524e-003, -1.282416e-002, -1.516488e-002, -1.578947e-002, -1.701642e-002, -1.648162e-002, -1.261697e-002, 7.548720e-003, 3.511560e-002, 4.738821e-002, 4.642433e-002, 3.520858e-002, -7.798305e-003, -4.960769e-003, -6.218982e-003, -1.471110e-002, -1.209578e-002, 5.160166e-002, 6.168979e-002, 4.562665e-002, 1.120320e-002, -2.440375e-002, -4.635234e-002, -4.517510e-002, -3.607911e-002, -2.274107e-002, -1.522793e-002, -2.630395e-002, -3.437222e-002, -3.283200e-002, -5.779351e-003, -4.439516e-003, -1.031514e-002, -6.691328e-003, -2.054462e-002, -2.523816e-002, -7.565279e-003, -1.560303e-002, 4.713049e-002, -1.807559e-002, 8.880495e-003, 5.315341e-003, -5.583108e-003, 1.204753e-002, -2.372582e-002, 8.581950e-004, 1.181906e-002, 1.239154e-002, 2.380713e-002, 1.672878e-002, 9.221241e-003, 9.546059e-003, 1.767551e-002, 3.191674e-002, 4.433561e-002, 4.766013e-002, 4.014210e-002, 7.089931e-003, -9.620760e-003, 1.013037e-002, 8.122628e-003, 3.311338e-003, -1.028378e-002, 1.780344e-002, 5.380084e-002, 4.524302e-002, 3.282212e-002, 1.757825e-002, 2.461831e-003, -3.800889e-003, 6.171317e-003, 1.805922e-002, 1.015871e-002, -8.252391e-003, -2.200468e-002, -1.803388e-002, -5.408737e-003, -7.439151e-003, -7.169117e-003, 4.868875e-003, -7.704436e-003, -1.970134e-002, -1.496786e-003, -8.769648e-003, 5.720946e-002, -1.276699e-002, 5.781182e-003, 1.101453e-002, -3.280936e-003, 2.607514e-002, -9.725391e-003, 3.956720e-003, 1.746733e-002, 2.281754e-002, 3.403619e-002, 2.819401e-002, 2.060411e-002, 2.114497e-002, 2.731397e-002, 3.148013e-002, 3.091964e-002, 3.015325e-002, 2.496634e-002, -5.406881e-003, 4.981866e-003, 1.618761e-002, 1.273905e-002, 1.189469e-002, -6.658341e-003, -1.138633e-002, 2.296505e-002, 4.022562e-002, 3.768605e-002, 2.941451e-002, 2.353958e-002, 1.977472e-002, 2.889493e-002, 3.386279e-002, 1.987935e-002, 1.799789e-003, -1.027262e-002, -4.120206e-003, 2.300167e-004, -8.774297e-003, -5.579495e-004, 1.776319e-002, 1.174950e-002, -2.890734e-003, 7.544739e-003, -1.086013e-003, 5.592065e-002, -1.240194e-002, -8.361078e-004, 1.548196e-002, 1.599895e-003, 3.597195e-002, 5.281114e-004, 5.712743e-003, 1.481241e-002, 2.814702e-002, 2.644489e-002, 2.011319e-002, 1.034693e-002, 7.191574e-003, 5.501793e-003, -5.442070e-004, 3.908624e-004, 8.521157e-003, 7.836081e-003, 1.789910e-003, 1.612221e-002, 1.280374e-002, 1.207079e-002, 1.432508e-002, 2.672928e-003, -1.271912e-002, -7.095120e-003, 1.110246e-002, 1.940455e-002, 1.698103e-002, 1.341915e-002, 1.013957e-002, 1.084230e-002, 1.446820e-002, 5.061212e-003, 1.264426e-003, 4.793313e-003, 4.940030e-003, -9.246980e-004, -9.372815e-003, 4.590169e-003, 1.665144e-002, 2.007757e-002, 1.225592e-002, -3.961426e-003, 3.066297e-003, -1.000713e-002, -1.429593e-002, -4.797760e-003, 4.169248e-003, -3.887977e-003, 2.922853e-002, 6.265860e-003, 9.632383e-003, 2.206406e-002, 3.034752e-002, 1.977291e-002, -5.362085e-003, -1.697388e-002, -2.081193e-002, -2.713098e-002, -3.072427e-002, -2.509347e-002, -1.803909e-003, 1.143867e-002, 1.428628e-002, 1.945569e-002, 1.526542e-002, 1.727645e-002, 1.887677e-002, 1.453828e-002, 1.967955e-003, -3.544333e-003, -1.644604e-002, -1.455034e-002, -1.461232e-002, -1.756334e-002, -1.982402e-002, -1.621551e-002, -7.760922e-003, -5.627582e-004, 9.927992e-003, 2.025095e-002, 1.363148e-002, -9.386206e-004, -3.322281e-003, 1.257258e-003, 1.701970e-003, 2.198047e-002, 1.608863e-002, -3.428086e-003, 3.380921e-003, -1.658845e-002, -1.291543e-002, -4.939390e-003, -2.656901e-003, -5.927029e-003, 1.259130e-002, 1.491294e-004, 1.490607e-002, 2.231538e-002, 3.381680e-002, 2.345269e-002, -6.444662e-003, -2.804028e-002, -3.683241e-002, -3.985153e-002, -3.565013e-002, -1.762781e-002, 4.840879e-003, 1.808502e-002, 2.010355e-002, 1.618130e-002, 1.992221e-002, 2.567635e-002, 3.507775e-002, 2.907861e-002, 4.590409e-003, -9.681589e-003, -4.871013e-003, -1.970924e-002, -2.952692e-002, -3.499457e-002, -3.387316e-002, -2.512178e-002, -1.483780e-002, -1.451991e-003, 1.766634e-002, 2.932474e-002, 1.698042e-002, 3.955417e-003, -5.319521e-005, -3.862145e-003, -7.490233e-003, 1.285793e-002, 9.219655e-003, -5.530335e-002, 3.248799e-004, -1.548966e-002, -1.032175e-002, -7.808162e-003, -3.695494e-003, -1.184549e-002, -6.486865e-003, -9.573425e-003, 1.563337e-002, 2.205193e-002, 2.642419e-002, 1.747899e-002, -7.154481e-003, -2.546106e-002, -2.836667e-002, -2.481714e-002, -1.733685e-002, -9.850986e-003, -6.386218e-003, 7.059835e-003, 2.063835e-002, 1.983257e-002, 2.507089e-002, 2.837124e-002, 4.447767e-002, 4.502145e-002, 1.892838e-002, -2.442863e-002, -1.899471e-002, -4.222204e-003, -1.185958e-002, -2.205376e-002, -2.492363e-002, -1.920678e-002, -1.071095e-002, -2.916321e-003, 1.446544e-002, 2.925411e-002, 1.518814e-002, 6.127291e-003, 2.347182e-003, -2.596190e-003, -1.307679e-003, 9.754824e-003, 1.081873e-003, -4.989911e-002, -6.357313e-003, -1.738289e-002, -9.496533e-003, -2.736771e-003, 2.322244e-003, -1.433195e-002, -2.085455e-002, -1.753241e-002, 1.075074e-002, 1.578067e-002, 1.318064e-002, 5.878784e-003, -1.722420e-002, -3.518114e-002, -3.494083e-002, -2.798873e-002, -2.064626e-002, -2.440554e-002, -2.905936e-002, 4.284213e-003, 4.041911e-002, 4.218908e-002, 2.950010e-002, 2.488219e-002, 5.219181e-002, 5.744371e-002, 3.149854e-002, -2.210808e-002, -4.872109e-002, -2.308745e-002, -8.613866e-003, -9.876791e-003, -1.406069e-002, -1.318778e-002, -1.101627e-002, -9.934950e-003, 1.218626e-002, 3.055594e-002, 1.227282e-002, 9.577272e-003, 9.873537e-003, 6.833702e-003, 6.527520e-003, 8.139958e-003, 1.211379e-002, -3.560971e-002, -1.163307e-002, -1.351623e-002, -1.525515e-003, 7.114363e-003, 1.021725e-002, -6.136972e-003, -2.799357e-002, -2.067099e-002, 5.378384e-003, 9.359182e-003, 2.867017e-003, -8.741792e-004, -1.922257e-002, -3.708721e-002, -3.839109e-002, -2.755348e-002, -2.571554e-002, -3.601495e-002, -

© ISO/IEC 2004 — All rights reserved


Copyright International Organization for Standardization
Provided by IHS under license with ISO
No reproduction or networking permitted without license from IHS
Not for Resale

2.820756e-002, 1.039584e-002, 4.203375e-002, 3.764341e-002, 2.494500e-002, 2.603468e-002, 5.778581e-002, 5.427376e-002, 1.825101e-002, -2.643607e-002, -5.937199e-002, -4.820704e-002, -2.287490e-002, -1.085877e-002, -1.140176e-002, -1.396301e-002, -1.623791e-002, -1.608560e-002, 1.202591e-002, 2.896054e-002, 1.431853e-002, 1.000422e-002, 9.052485e-003, 1.071596e-002, 9.583137e-003, 3.286219e-004, 1.663054e-002, -1.633343e-002, -8.317637e-003, -1.603538e-002, 1.178293e-003, 7.843485e-003, 1.116284e-002, -8.363375e-003, -2.524709e-002, -1.679897e-002, 6.946366e-003, 5.347802e-003, -6.240093e-003, -9.935069e-003, -2.213705e-002, -3.774810e-002, -3.988540e-002, -2.966606e-002, -2.696429e-002, -2.401076e-002, 2.811314e-003, 3.590660e-002, 3.681522e-002, 1.143724e-002, 4.427457e-003, 1.538208e-002, 4.961872e-002, 5.121625e-002, 1.377589e-002, -1.514155e-002, -4.415189e-002, -5.889442e-002, -4.030832e-002, -2.139005e-002, -1.356018e-002, -1.536902e-002, -1.927691e-002, -1.890803e-002, 1.268459e-002, 2.743766e-002, 1.026087e-002, 1.092857e-002, 9.468146e-003, 1.634550e-002, 1.249188e-002, -3.319985e-003, 2.161913e-002, -3.043940e-003, 1.193588e-002, -8.751911e-003, 8.485435e-004, 5.549174e-003, 5.039521e-003, -7.731682e-003, -1.297340e-002, -3.099942e-003, 1.588466e-002, 5.728229e-003, -1.060935e-002, -1.324080e-002, -2.177408e-002, -2.752654e-002, -3.364805e-002, -3.016153e-002, -2.019061e-002, 1.044974e-002, 4.672654e-002, 6.559638e-002, 5.629807e-002, 2.287950e-002, 4.672303e-003, 1.992100e-003, 3.527856e-002, 6.557407e-002, 4.915909e-002, 2.840262e-002, 1.092905e-003, -3.336700e-002, -4.148149e-002, -2.798106e-002, -1.869174e-002, -1.706309e-002, -1.936660e-002, -1.831508e-002, 1.198534e-002, 2.578176e-002, 6.899887e-003, -1.687225e-003, -4.184094e-003, 1.118865e-002, 6.837212e-003, -1.043019e-004, 2.841570e-002, 1.029994e-002, 2.897277e-002, -7.661869e-004, 5.471170e-003, 2.698523e-003, -3.734189e-003, -4.867787e-003, -7.894480e-003, 6.592578e-003, 1.733737e-002, 6.673870e-003, -1.324559e-002, -1.451856e-002, -1.807735e-002, -1.780575e-002, -2.803988e-002, -2.153360e-002, 6.340879e-003, 4.301154e-002, 7.027577e-002, 7.648141e-002, 6.006694e-002, 2.844544e-002, 1.046547e-002, -3.031453e-003, 2.099160e-002, 6.125554e-002, 6.624735e-002, 5.879399e-002, 3.560199e-002, 8.533170e-003, -1.802719e-002, -2.114604e-002, -1.951203e-002, -1.805930e-002, -2.122174e-002, -1.885996e-002, 1.155855e-002, 2.151065e-002, 1.214798e-002, -1.266067e-002, -1.592751e-002, 2.693772e-003, 2.163565e-003, 1.124357e-003, 3.142734e-002, 2.246929e-002, 3.630124e-002, 3.061558e-003, 1.129244e-003, -1.033568e-003, -7.241706e-003, -1.266589e-002, -7.601775e-003, 9.559395e-003, 1.671288e-002, 8.027185e-003, -1.570043e-002, -1.408699e-002, -1.520152e-002, -1.188789e-002, -1.895059e-002, -6.930351e-003, 2.903600e-002, 5.745755e-002, 6.813176e-002, 6.266959e-002, 4.471081e-002, 1.964194e-002, 4.137871e-003, -8.532016e-003, 2.762697e-004, 2.784525e-002, 4.029968e-002, 4.534151e-002, 4.117389e-002, 3.364262e-002, 1.510643e-002, -2.313443e-003, -8.904194e-003, -1.850528e-002, -2.124105e-002, -1.859704e-002, 6.286775e-003, 1.342068e-002, 6.921388e-003, -1.223596e-002, -1.845035e-002, -1.245571e-002, -1.180929e-002, -6.207225e-003, 3.260610e-002, 3.520441e-002, -4.433202e-003, -3.083843e-003, -1.620915e-004, 5.067265e-004, 2.612211e-003, -6.703143e-003, -3.956365e-004, 1.104719e-002, 2.058798e-002, 1.206172e-002, -1.430113e-002, -1.324835e-002, -1.162000e-002, -8.420563e-003, 3.888155e-004, 1.458408e-002, 2.954958e-002, 3.992531e-002, 3.963193e-002, 2.949143e-002, 1.581095e-002, 4.324727e-003, -5.075899e-003, -9.049634e-003, 1.787001e-003, 1.669874e-002, 2.461104e-002, 2.464568e-002, 2.037837e-002, 2.305325e-002, 3.388478e-002, 2.233977e-002, 7.528601e-003, -9.069717e-003, -1.857085e-002, -1.632639e-002, 2.738327e-003, 3.236509e-003, 2.693077e-003, -8.735238e-003, -1.077164e-002, -1.280073e-002, -2.509193e-002, -2.051791e-002, 2.491377e-002, 3.229516e-002, 1.851019e-003, 1.247696e-003, 2.419324e-003, 1.299490e-003, 1.175650e-002, 4.305374e-003, 9.548682e-003, 1.368197e-002, 2.028185e-002, 8.771423e-003, -1.008952e-002, -1.813666e-002, -8.632518e-003, 1.947660e-003, 2.386090e-002, 3.236019e-002, 1.423520e-002, 2.099977e-003, 8.516362e-004, 6.483642e-003, 1.174381e-002, 1.475922e-002, 1.647891e-002, 1.828177e-002, 2.861240e-002, 2.938239e-002, 1.731704e-002, 1.135386e-003, -1.003027e-002, -6.031290e-003, 2.503961e-002, 3.934347e-002, 2.784234e-002, 1.699370e-003, -1.535203e-002, -1.328679e-002, -3.810707e-003, -2.298020e-003, 2.825176e-003, 2.351983e-003, 6.364587e-003, -4.766065e-003, -2.390054e-002, -2.480565e-002, 1.738591e-003, 2.390535e-002, 4.001155e-003, 8.283420e-003, 7.112427e-003, 1.286052e-003, 1.203423e-002, 1.021331e-002, 9.506209e-003, 1.379282e-002, 2.083944e-002, 9.128960e-003, -7.808619e-003, -1.970994e-002, -6.537454e-003, 1.561042e-002, 4.671904e-002, 4.650743e-002, 1.088572e-002, -1.310611e-002, -6.329510e-003, 3.011533e-003, 2.693163e-003, -7.176874e-003, -9.551785e-003, -1.144314e-002, -9.779347e-003, -6.315571e-003, -1.116834e-002, -1.605846e-002, -2.163139e-002, -1.294796e-002, 2.422960e-002, 5.277387e-002, 4.394571e-002, 1.110780e-002, -9.113357e-003, -9.582808e-003, -8.893447e-003, -7.088685e-003, 2.558051e-003, 2.550627e-003, 7.077304e-005, -1.003013e-003, -2.048150e-002, -2.793311e-002, -3.946411e-003, 1.437776e-002, 7.700842e-003, 7.900765e-003, 4.116765e-003, -1.485813e-003, 3.910632e-003, 2.832193e-003, -2.738055e-003, 4.873512e-003, 1.275112e-002, 4.268533e-003, -6.596143e-003, -1.266584e-002, -1.540286e-003, 2.260365e-002, 5.523648e-002, 4.778260e-002, 1.316095e-002, -5.147614e-003, -6.299861e-003, -1.925751e-003, -3.817585e-003, -1.547190e-002, -2.674847e-002, -3.107992e-002, -2.841010e-002, -2.221404e-002, -1.994246e-002, -1.774705e-002, -8.518660e-003, 3.536896e-003, 2.792513e-002, 5.015822e-002, 4.432829e-002, 1.145844e-002, -


© ISO/IEC 2004 — All rights reserved

Copyright International Organization for Standardization
Provided by IHS under license with ISO
No reproduction or networking permitted without license from IHS
Not for Resale

4.869207e-003, -6.645695e-003, -7.921619e-003, -1.221708e-002, -1.094447e-003, -8.927887e-003, -2.683244e-003, 6.801529e-003, -7.545527e-003, -4.189208e-003, -9.187991e-003, 5.970494e-003, 1.391054e-002, 9.788322e-003, 1.015299e-002, 1.952981e-003, 1.022698e-003, -7.614202e-003, -1.085962e-002, -8.428668e-004, 4.936112e-003, 1.045225e-004, 2.094858e-003, 1.154471e-003, 5.265296e-003, 2.240384e-002, 4.103597e-002, 3.865102e-002, 1.364249e-002, -7.259447e-003, -1.833594e-002, -1.738748e-002, -2.263051e-002, -3.114112e-002, -3.983270e-002, -4.300663e-002, -4.092748e-002, -3.236034e-002, -2.021808e-002, -7.343565e-003, -1.518283e-003, 6.621274e-003, 2.239232e-002, 3.622791e-002, 3.698429e-002, 1.252157e-002, -2.798046e-003, -1.453825e-003, 1.814930e-003, -1.457266e-002, -5.813634e-003, -1.819349e-002, -2.824980e-005, 9.816315e-003, -5.208684e-003, 8.410026e-004, -1.395630e-002, -4.465237e-004, 2.084102e-002, 1.272704e-002, 9.322930e-003, -1.791093e-003, -9.849162e-003, -1.465115e-002, -1.516987e-002, -1.069107e-002, 1.057166e-002, -7.104143e-005, 6.417994e-003, 9.239053e-003, 1.038863e-002, 1.523814e-002, 2.160983e-002, 1.904531e-002, 9.621442e-004, -1.505370e-002, -2.625966e-002, -2.780982e-002, -3.165996e-002, -3.291056e-002, -3.421917e-002, -2.992959e-002, -2.609970e-002, -1.877397e-002, -8.281067e-003, -3.538319e-003, -4.599594e-003, -9.048882e-004, 6.812673e-003, 2.175662e-002, 2.425120e-002, 1.045063e-002, -1.927164e-003, 1.090849e-002, 1.031406e-002, -1.064868e-003, -6.234505e-003, -1.295899e-002, 6.882952e-003, 1.152856e-002, -3.641403e-003, 2.999119e-003, -1.181165e-002, 9.207317e-004, 2.003035e-002, 7.287938e-003, 6.360596e-003, -3.692247e-003, -7.969097e-003, -1.854915e-003, -9.056185e-003, 2.467773e-003, 1.525640e-002, 6.222097e-003, -3.081057e-003, 5.021110e-003, 9.214486e-003, 7.784466e-003, 1.049812e-002, 6.580880e-004, -1.361002e-002, -2.494071e-002, -3.565667e-002, -3.623569e-002, -3.485566e-002, -2.990497e-002, -2.537899e-002, -1.714653e-002, -1.277786e-002, -1.137550e-002, -1.171125e-002, -1.530017e-002, -1.864335e-002, -1.612505e-002, -8.413622e-003, 8.694174e-003, 1.269243e-002, 5.752327e-003, 5.612001e-003, 2.766710e-002, 1.837887e-002, 1.201599e-002, 2.075462e-003, 1.923884e-004, 1.423112e-002, 7.886769e-003, 9.124668e-004, 1.222896e-002, -6.041833e-003, 7.117514e-003, 6.485307e-003, -6.003760e-003, 7.438671e-003, 5.475101e-003, 7.786514e-003, 1.841669e-002, 1.115351e-002, 1.692882e-002, 2.044790e-002, 1.157278e-002, -8.987890e-003, -1.469143e-002, -9.048499e-004, -1.571111e-003, 1.941111e-003, -3.410047e-003, -1.494337e-002, -2.459785e-002, -3.171863e-002, -3.552862e-002, -3.517030e-002, -2.991068e-002, -2.533238e-002, -1.884512e-002, -1.579468e-002, -1.395343e-002, -1.648012e-002, -2.206736e-002, -2.508344e-002, -2.166550e-002, -1.131775e-002, 7.906653e-003, 2.490074e-003, -9.080635e-003, 1.059169e-002, 3.225328e-002, 2.299749e-002, 2.186879e-002, 1.302606e-002, 1.211655e-002, 1.005633e-002, 1.228286e-003, 5.243921e-003, 1.887011e-002, -5.295831e-004, 1.594609e-002, -1.086255e-002, -1.079129e-002, 1.391775e-002, 1.217607e-002, 9.391440e-003, 1.766985e-002, 9.103501e-003, 1.933325e-002, 1.741117e-002, 6.058481e-003, -1.069955e-002, -1.898074e-002, -1.183630e-002, -7.988117e-003, -4.270023e-003, -5.244624e-003, -1.582241e-002, -1.906449e-002, -2.045852e-002, -2.389833e-002, -2.319929e-002, -2.008123e-002, -1.667850e-002, -1.149450e-002, -2.062964e-003, 2.815044e-003, -2.698733e-003, -8.081391e-003, -9.388584e-003, -7.985809e-003, 2.291520e-003, 5.198261e-003, -9.583689e-003, -1.726711e-002, 1.030248e-002, 2.670795e-002, 1.799902e-002, 2.375452e-002, 2.214509e-002, 1.941343e-002, 9.291478e-003, -3.536789e-003, 8.111020e-003, 2.577596e-002, 2.642885e-003, 1.733038e-002, -1.952360e-002, -1.435612e-002, 4.363650e-003, -2.769211e-003, -6.104587e-003, 4.940398e-003, -4.823815e-003, 5.032984e-003, 3.474685e-003, -7.011377e-003, 2.853826e-004, -1.308870e-003, -7.469040e-003, -1.240690e-002, -1.191449e-002, -9.658418e-003, -9.531084e-003, -1.094328e-002, -1.211602e-002, -9.919497e-003, -1.553436e-002, -1.679232e-002, -1.637145e-002, -1.170494e-002, -2.545229e-003, 6.637454e-003, 4.476384e-003, 2.351896e-003, 3.058010e-003, 2.188604e-003, 5.824376e-003, -3.944569e-003, -2.134406e-002, -2.449650e-002, 1.060846e-004, -1.534337e-004, 9.773172e-004, -3.490852e-003, -2.611659e-003, 3.591659e-003, -1.048397e-002, -1.020335e-002, 7.632842e-003, 2.877697e-002, -5.444432e-003, 6.701093e-003, -3.056276e-002, -2.936026e-002, -9.151814e-003, -1.536253e-002, -1.423059e-002, -5.005009e-003, -1.852193e-002, -1.432226e-002, -1.956340e-002, -1.899872e-002, 2.745392e-003, 5.871468e-003, -3.803685e-003, -1.129758e-002, -1.336847e-002, -1.624939e-002, -1.122660e-002, -8.119933e-003, -7.469668e-003, -1.042018e-002, -2.361574e-002, -3.094749e-002, -3.368799e-002, -3.272674e-002, -2.429833e-002, -1.640100e-002, -1.032864e-002, -7.220763e-003, -2.599440e-003, -4.620806e-003, -7.836750e-003, -1.613975e-002, -2.613950e-002, -2.409030e-002, -1.578113e-002, -2.426028e-002, -2.364274e-002, -3.070190e-002, -2.041971e-002, -1.526747e-002, -3.387393e-002, -3.310806e-002, -8.091371e-003, 2.538229e-002, -1.075976e-002, -9.942305e-003, -1.527229e-003, 1.409524e-003, 2.597109e-002, 2.513067e-002, 2.124816e-002, 1.916236e-002, 1.822991e-003, -2.401536e-003, -1.200030e-003, 7.527471e-003, 3.193045e-002, 3.455472e-002, 2.729068e-002, 2.470087e-002, 2.431237e-002, 1.783472e-002, 1.624537e-002, 2.211266e-002, 2.604101e-002, 1.983140e-002, 1.602547e-003, -1.511202e-002, -2.235128e-002, -2.495693e-002, -1.938578e-002, -1.409796e-002, -7.785824e-003, 4.919461e-004, -7.079228e-004, -9.414462e-003, -9.422804e-003, -1.979091e-003, -4.372543e-003, -9.760556e-004, -7.262742e-003, -1.135840e-002, -1.393080e-002, -6.503030e-003, -1.891260e-003, -2.973738e-003, -7.637993e-003, -1.493604e-002, -1.032147e-002, -2.052439e-003, -1.842755e-002, -1.754238e-002, 2.788597e-003, -2.967407e-003, 1.876470e-002, 1.786218e-002,

© ISO/IEC 2004 — All rights reserved


Copyright International Organization for Standardization
Provided by IHS under license with ISO
No reproduction or networking permitted without license from IHS
Not for Resale

1.356818e-002, -4.487167e-004, -1.802787e-002, -1.794616e-002, -2.024665e-002, -1.084009e-002, 1.048272e-002, 7.409666e-003, -1.939481e-003, 6.837217e-003, 1.112055e-002, 1.437799e-003, -9.884319e-003, -1.144161e-002, -8.929816e-003, -5.198701e-003, -1.854684e-002, -3.638601e-002, -4.665133e-002, -4.916318e-002, -4.625841e-002, -4.012801e-002, -3.111168e-002, -2.632581e-002, 2.289557e-002, 2.033928e-002, 2.220308e-002, 3.002397e-002, 3.172002e-002, 3.806061e-002, 3.412962e-002, 3.415412e-002, 3.233509e-002, 4.056201e-002, 4.685997e-002, 3.104610e-002, 2.810429e-002, 2.771084e-002, 2.803067e-002, 1.866549e-002, -2.458803e-003, -7.070262e-004, 2.880848e-003, -1.196876e-002, -1.581565e-002, 1.309589e-002, 7.761967e-004, -1.242782e-002, -1.437944e-002, -6.235421e-003, -7.214330e-003, -1.926464e-002, -1.303490e-002, -5.672845e-003, -1.074048e-002, 6.107460e-003, 1.406789e-002, 4.066431e-003, -6.944265e-003, -4.299971e-003, -3.605973e-003, 1.652718e-003, -4.166926e-004, -5.972396e-003, -7.658314e-003, -4.420068e-003, 1.236831e-003, 5.623682e-003, 9.651590e-003, 6.339028e-003, -1.922018e-003, -3.490042e-003, 1.995290e-003, 3.644444e-003, 9.865542e-003, 1.931122e-002, 1.374338e-002, 1.369028e-002, 6.248892e-003, 4.853453e-003, 2.346237e-002, 6.939444e-003, 2.533310e-003, 6.269499e-003, 5.073942e-003, -1.463650e-002, -2.906184e-003, 9.314804e-003, 1.498249e-002, 8.395372e-004, -1.387767e-002, 1.073910e-002, 3.637971e-003, -4.271426e-003, -8.190103e-003, 1.123508e-002, 1.216261e-002, -1.587175e-002, -2.100545e-002, -1.666767e-002, -1.865516e-002, -5.107302e-003, 4.269406e-003, -2.589933e-003, -1.288545e-002, -1.281804e-002, -1.331174e-002, -1.482366e-002, -1.011361e-002, -9.443846e-003, -6.731566e-003, -1.346922e-003, 1.902613e-003, 4.444567e-003, 2.667239e-003, -5.447193e-003, -1.329275e-002, -1.339508e-002, -8.072508e-003, -8.840194e-003, 4.889064e-004, 4.713073e-004, -4.679849e-003, -4.330715e-003, -1.973480e-002, -3.373761e-002, -1.150098e-002, -1.958540e-002, -1.664014e-002, -6.351459e-003, -7.278519e-003, -3.275666e-002, -1.380115e-002, 1.693996e-002, 1.720671e-002, -1.981793e-003, -1.540093e-002, 2.135846e-002, 1.911590e-002, 1.690080e-002, 1.622355e-002, 3.604995e-002, 3.569361e-002, 1.393495e-002, 6.853120e-003, 2.360685e-003, 3.123222e-003, 5.267421e-003, 1.102272e-002, 1.142875e-002, 2.536877e-003, -2.250657e-003, -3.971241e-003, -5.384983e-003, 8.150444e-005, 5.427331e-003, 1.079940e-002, 1.673417e-002, 1.875240e-002, 2.107440e-002, 1.535670e-002, 3.712966e-003, -1.044410e-002, -1.224455e-002, -6.313497e-003, -2.071651e-003, 7.845671e-003, -1.589989e-003, -7.503724e-003, -1.771557e-003, -1.219896e-002, -3.593281e-002, -2.429520e-002, -1.969577e-002, -1.384633e-002, -3.648513e-003, -6.249863e-004, -2.187417e-002, -1.151575e-002, 1.747549e-002, 3.006795e-003, -1.344773e-002, -1.917586e-002, -1.264462e-002, -1.486665e-002, -2.191924e-002, -1.732589e-002, -1.001407e-002, -1.525658e-002, -1.790497e-002, -1.006498e-002, -1.484964e-002, -1.513948e-002, -8.292498e-003, -1.002473e-002, -2.238815e-003, 1.258893e-003, -1.734453e-003, -5.066499e-003, -4.546245e-003, 2.328574e-003, 9.124730e-003, 1.385348e-002, 1.758568e-002, 1.887309e-002, 2.171816e-002, 1.652500e-002, -1.322232e-003, -1.143915e-002, -5.741756e-003, -1.950996e-003, 2.974380e-003, 5.922198e-003, -1.906077e-003, 2.739972e-003, 1.000327e-002, 1.293748e-002, 2.657043e-004, 1.606152e-003, 6.619688e-003, 1.295626e-002, 1.248648e-002, 1.843200e-002, -1.068580e-002, -6.142100e-004, 1.637998e-002, 1.442471e-002, 8.882845e-003, 3.901015e-003, 3.531163e-003, -1.461296e-003, -5.158086e-003, -1.911417e-003, -9.928161e-004, -7.616272e-003, -1.052622e-003, 9.358319e-003, 1.641093e-003, -8.144087e-003, -5.736748e-003, -1.315045e-002, -1.410902e-002, -1.238257e-002, -1.052731e-002, -1.403788e-002, -1.923476e-002, -2.222693e-002, -2.060466e-002, -2.142165e-002, -2.190091e-002, -2.689751e-002, -3.153746e-002, -3.552831e-002, -3.904561e-002, -3.691216e-002, -3.538958e-002, -4.140343e-002, -4.321741e-002, -4.927371e-002, -2.946013e-002, -1.834078e-002, -6.492623e-003, 4.338715e-003, 1.209578e-002, 2.324471e-002, 2.759940e-002, 2.659818e-002, 1.685694e-002, 1.561095e-002, 1.043239e-002, 4.950539e-003, 2.284384e-002},
{3.072189e-003, 1.558324e-003, 2.324718e-004, 5.894098e-003, 5.052168e-003, -4.337007e-003, -1.108992e-002, -1.644998e-003, 8.277983e-003, -1.098924e-003, -1.365864e-002, 1.770977e-003, 2.075245e-002, 2.842471e-002, 2.344962e-002, 1.356566e-002, 2.004576e-003, -6.695373e-003, -1.029492e-002, -1.070508e-002, -1.335435e-002, -1.141081e-002, -7.541756e-003, -2.661778e-003, 4.021054e-003, 1.161995e-002, 1.281891e-002, 9.378056e-003, 6.951639e-003, 3.408074e-003, 3.425216e-003, -9.258024e-003, -2.592278e-002, -3.696581e-002, -2.826236e-002, -1.275552e-002, -6.812857e-003, -9.624888e-003, -1.152929e-002, -3.766207e-003, 1.404229e-002, 1.215521e-002, 3.992557e-003, 1.240145e-004, -6.200673e-003, -6.538905e-003, 2.220718e-003, 1.213923e-004, 1.964432e-003, 1.107844e-002, 3.864900e-003, -1.542954e-002, -1.641609e-002, -3.507496e-003, -1.119770e-002, -3.242477e-002, -3.645132e-002, -2.432298e-002, -1.915125e-002, -2.394209e-002, -2.877395e-002, -2.863759e-002, -1.927665e-002, -5.889876e-003, 2.981174e-003, 7.623340e-003, 1.186442e-002, 1.631709e-002, 1.394033e-002, 1.546957e-002, 1.781899e-002, 2.473867e-002, 3.205889e-002, 2.854306e-002, 2.345151e-002, 1.201206e-002, -5.714708e-005, 2.075420e-004, -2.873700e-003, -1.447504e-002, -1.738629e-002, -1.428124e-003, 1.028987e-002, 7.932741e-003, -7.016258e-003, -1.463409e-002, -9.769490e-003, -3.879865e-003, -1.132566e-002, -2.342960e-002, -4.715923e-003, -5.778116e-003, 9.763776e-003, 6.085169e-003, 7.780124e-003, 1.979370e-002, 8.263173e-003, 4.177467e-003, 1.371094e-002, 1.619607e-002, -6.386238e-003, -1.136312e-002, -1.109752e-002, -3.043772e-003, -6.762147e-003, -1.870286e-002, -1.899898e-002, -1.352247e-002, -6.788311e-003, -1.835851e-003, 3.382897e-003, 6.385387e-003,


© ISO/IEC 2004 — All rights reserved

Copyright International Organization for Standardization
Provided by IHS under license with ISO
No reproduction or networking permitted without license from IHS
Not for Resale

8.569789e-003, 7.923106e-003, 3.404085e-003, -8.873494e-005, 2.140763e-003, 7.501529e-003, 1.247068e-002, 1.303901e-002, 1.367812e-002, 8.856852e-003, -6.496322e-003, -2.149896e-002, -1.691270e-002, -6.906821e-003, -6.364988e-003, -5.166443e-003, 4.974451e-003, 1.033247e-002, 5.782162e-003, -9.568724e-003, -1.464686e-002, -6.314288e-003, -3.414977e-003, -1.257890e-002, 8.221310e-004, -1.303451e-003, 1.225532e-002, 6.288348e-003, 7.443510e-003, 1.801759e-002, 1.577042e-002, 1.723143e-002, 2.014030e-002, 1.556774e-002, 5.907675e-003, 1.427969e-005, 1.089847e-003, 2.698156e-003, -6.464688e-003, -9.427685e-003, -1.425215e-002, -2.168639e-002, -2.824576e-002, -2.609807e-002, -1.884129e-002, -9.979229e-003, -2.383361e-003, 3.868406e-003, 9.892683e-004, -2.304163e-004, 1.684220e-003, 1.027784e-003, -4.507175e-003, -5.906400e-003, -1.153064e-002, -1.674513e-002, -2.085429e-002, -2.871415e-002, -3.514246e-002, -2.656773e-002, -1.613793e-002, -9.856623e-003, -4.576443e-003, 3.935463e-003, 1.039735e-002, 4.188364e-003, -3.113446e-003, -2.513334e-003, 4.001286e-003, -3.814980e-003, 6.786390e-003, 2.190166e-003, -1.229889e-004, -9.356557e-003, -7.322512e-003, 1.224163e-002, 1.188442e-002, 9.835489e-004, 9.279401e-003, 1.577659e-002, 6.742184e-003, 3.675842e-003, 1.391895e-002, 1.427629e-002, 5.084351e-003, -7.208655e-003, -1.915606e-002, -2.623370e-002, -2.385728e-002, -1.607635e-002, -1.092258e-002, 1.402631e-003, 1.597588e-002, 2.748821e-002, 3.379355e-002, 3.987459e-002, 4.258667e-002, 3.598662e-002, 2.069338e-002, 7.147257e-003, -4.895812e-003, -1.531495e-002, -2.218115e-002, -2.880812e-002, -3.156434e-002, -3.158592e-002, -2.612556e-002, -1.321332e-002, -6.819107e-003, -4.401815e-003, 7.730289e-003, 1.039484e-002, 2.704543e-003, 7.967467e-003, 5.749900e-003, 1.520838e-003, 9.320768e-003, 2.257154e-003, -5.607367e-003, -7.941534e-003, -7.161739e-005, 1.734164e-002, -1.057759e-002, -1.748678e-002, 6.092277e-004, 4.546573e-003, -5.618969e-003, 5.244699e-003, 1.670569e-002, 5.157613e-003, -9.686362e-003, -2.310327e-002, -3.059106e-002, -3.251754e-002, -2.990777e-002, -2.869919e-002, -2.216689e-002, -6.129533e-003, 1.298263e-002, 3.371832e-002, 5.329678e-002, 6.459384e-002, 6.471472e-002, 5.262711e-002, 2.849851e-002, 4.999646e-003, -1.364940e-002, -2.101427e-002, -2.638021e-002, -2.844162e-002, -3.278236e-002, -3.284596e-002, -3.330779e-002, -3.119095e-002, -2.188905e-002, -1.990249e-002, -1.792158e-002, -1.492091e-002, -1.528344e-002, -1.415419e-002, -1.297921e-002, -8.166444e-003, -1.134888e-002, -1.926703e-002, -8.825593e-003, -4.896623e-003, 3.448919e-003, 1.320510e-002, -1.636948e-002, -8.358732e-003, 8.935646e-003, 1.321110e-003, 1.659645e-003, 1.897672e-002, 1.036228e-002, 8.765331e-004, -2.359072e-004, -5.649628e-003, -1.553118e-002, -2.409904e-002, -2.268614e-002, -2.650370e-002, -2.094743e-002, -9.721633e-003, 9.380678e-003, 3.158953e-002, 5.428274e-002, 6.420595e-002, 5.926528e-002, 4.581060e-002, 2.821728e-002, 7.348371e-003, -1.468179e-002, -2.593957e-002, -2.652406e-002, -2.292226e-002, -1.944485e-002, -1.590649e-002, -1.919062e-002, -1.803785e-002, -1.405930e-002, -1.376087e-002, -1.258790e-002, -1.868132e-002, -1.594923e-002, -1.896942e-002, -1.070388e-002, 6.199615e-003, -3.331654e-003, -2.034111e-002, -8.704904e-003, -6.959653e-003, -3.397358e-004, 5.387461e-003, -1.438282e-002, 3.966595e-003, 4.058521e-003, -2.402528e-003, 1.271294e-002, 1.448081e-002, 1.945563e-003, 1.015367e-002, 1.881971e-002, 1.536753e-002, 1.415447e-003, -1.095524e-002, -1.826732e-002, -2.681337e-002, -2.485950e-002, -2.115162e-002, -8.818857e-003, 7.271809e-003, 2.200835e-002, 2.955697e-002, 2.433818e-002, 1.560555e-002, 5.277746e-003, -6.071415e-003, -2.028180e-002, -3.248704e-002, -3.101405e-002, -2.577669e-002, -2.155615e-002, -1.259799e-002, -8.202976e-003, -1.178185e-002, -5.974958e-003, -5.493781e-003, -6.813118e-003, -4.680068e-003, -1.223524e-002, -1.727612e-002, -1.249265e-002, 1.292523e-002, 7.887188e-003, -1.124692e-002, -7.279865e-003, -5.237556e-003, 1.511453e-003, 3.928723e-003, -4.299433e-003, 1.223436e-002, 1.158727e-003, 1.792209e-003, 8.371041e-003, -2.531979e-003, 3.309515e-003, 1.621906e-002, 2.664128e-002, 1.840061e-002, 6.975719e-003, -7.320286e-003, -1.631968e-002, -2.761266e-002, -2.813089e-002, -3.129864e-002, -2.569203e-002, -1.131214e-002, -2.772482e-003, 6.602656e-003, 7.807982e-003, 1.877282e-003, -2.415134e-003, -1.301628e-002, -2.261273e-002, -3.111742e-002, -2.937900e-002, -2.660507e-002, -2.748150e-002, -2.000575e-002, -1.707503e-002, -1.174197e-002, -7.371001e-003, 1.167190e-003, 1.934199e-003, 8.526550e-003, -2.040057e-003, -1.013212e-002, -2.117078e-003, 1.371728e-002, 1.575590e-002, -4.291325e-004, -2.895643e-003, -3.239541e-003, 3.803306e-003, 7.812523e-003, 5.484813e-003, 4.184898e-003, 2.212019e-003, 1.048298e-002, -1.868318e-003, -2.249036e-003, 8.993301e-003, 1.812539e-002, 1.675200e-002, 9.888116e-003, 4.825976e-003, -2.153328e-003, -4.565475e-003, -1.002266e-002, -1.139205e-002, -1.610096e-002, -1.409051e-002, -4.149473e-003, 3.437673e-003, 1.444568e-002, 1.972811e-002, 1.999737e-002, 1.507133e-002, 5.159368e-003, -4.542933e-003, -1.098197e-002, -9.301898e-003, -1.022358e-002, -1.943047e-002, -2.614093e-002, -2.612976e-002, -1.925727e-002, -1.078590e-002, 2.864315e-003, 1.461681e-002, 1.053331e-002, 4.050564e-003, -4.444557e-003, 5.013700e-004, 1.070273e-002, 1.133649e-002, 5.682117e-003, 6.617434e-004, -1.300018e-002, -2.020263e-004, 1.143196e-002, 4.154339e-003, -9.852738e-004, 6.720453e-003, 3.727067e-003, -5.087402e-003, 1.927396e-004, 8.940881e-003, 5.254339e-003, -2.753991e-003, -4.496924e-003, -3.818422e-003, 2.118851e-003, 8.260427e-003, 1.057093e-002, 1.186041e-002, 3.190796e-003, -3.173424e-003, 2.857167e-003, 1.442109e-002, 2.396396e-002, 3.298508e-002, 3.413081e-002, 3.410950e-002, 2.869002e-002, 2.201702e-002, 1.801009e-002, 1.668969e-002, 1.221511e-002, 2.111143e-003, -1.556895e-002, -2.564684e-002, -2.002126e-002, -

© ISO/IEC 2004 — All rights reserved


Copyright International Organization for Standardization
Provided by IHS under license with ISO
No reproduction or networking permitted without license from IHS
Not for Resale

9.178717e-003, 1.561560e-003, 1.262630e-002, 1.544408e-002, 1.157574e-002, 1.175501e-003, 3.887400e-003, 2.706124e-003, 1.489179e-003, 3.321430e-003, 4.447707e-003, -1.131835e-002, 2.964213e-004, 1.720515e-002, -9.320008e-004, -3.389741e-003, -3.309321e-003, -2.022704e-003, -6.011843e-003, 2.058208e-003, -1.907914e-003, -1.150901e-002, -1.875521e-002, -1.506861e-002, -5.234807e-003, 7.543441e-003, 2.156462e-002, 3.004551e-002, 2.566641e-002, 5.960697e-003, -1.751604e-003, 1.425041e-003, 1.031963e-002, 1.871428e-002, 2.856572e-002, 3.428060e-002, 3.571552e-002, 3.545559e-002, 3.332829e-002, 3.412869e-002, 3.348808e-002, 2.409864e-002, 1.873216e-002, 1.137679e-003, -1.093766e-002, -7.583780e-003, 3.810741e-003, 1.154046e-002, 9.528383e-003, 1.197626e-002, 1.151676e-002, 5.855524e-003, 4.762395e-003, 1.658194e-003, -2.706867e-003, -3.980491e-003, 5.721606e-003, -9.119191e-003, -2.015532e-003, -6.232565e-003, -5.105254e-003, -6.965111e-003, -5.257625e-003, -3.642816e-003, 2.232460e-003, 3.262357e-003, -9.286030e-003, -1.629706e-002, -1.192843e-002, -1.040573e-002, -6.676708e-004, 1.082167e-002, 2.448152e-002, 3.187696e-002, 2.050469e-002, -1.544377e-003, -1.484513e-002, -1.358123e-002, -9.906543e-003, -1.050461e-003, 1.174364e-002, 2.137578e-002, 2.435537e-002, 2.625079e-002, 2.926646e-002, 3.259034e-002, 3.449017e-002, 2.887207e-002, 2.882913e-002, 2.231361e-002, 9.426658e-003, 6.290886e-003, 1.930647e-002, 2.463445e-002, 1.923039e-002, 1.596610e-002, 8.342014e-003, 7.448561e-003, 6.152208e-003, 7.451542e-003, -1.221938e-003, -1.353636e-002, 9.352456e-003, -5.873516e-003, -5.646451e-004, -1.410217e-002, -2.947436e-003, -5.883817e-003, 1.840967e-003, 3.050398e-003, 1.081214e-002, 2.283330e-003, -6.051103e-003, -2.587003e-003, -1.490582e-004, 1.463663e-003, 4.469294e-003, 1.370145e-002, 2.108048e-002, 2.025503e-002, 5.743562e-003, -1.476348e-002, -3.465868e-002, -3.582192e-002, -3.746830e-002, -2.888512e-002, -1.700294e-002, -4.499866e-003, 3.335931e-003, 1.009154e-002, 1.394991e-002, 1.802553e-002, 2.135860e-002, 2.450707e-002, 3.150819e-002, 3.734578e-002, 2.893597e-002, 1.721467e-002, 3.226384e-002, 3.763125e-002, 2.636617e-002, 1.740436e-002, 9.183025e-003, 1.435418e-002, 1.267119e-002, 1.218870e-002, 5.282294e-003, -1.448586e-002, 1.216058e-002, -6.254245e-003, 9.173256e-004, -2.054983e-002, 1.563815e-003, -1.111930e-003, 6.388027e-003, 1.132383e-002, 1.430642e-002, 9.783935e-003, 9.063096e-003, 1.727854e-002, 1.314376e-002, 1.178803e-002, 1.061414e-002, 1.433142e-002, 1.318040e-002, 3.121663e-003, -1.337732e-002, -3.104292e-002, -5.318232e-002, -6.237741e-002, -6.734265e-002, -6.271471e-002, -5.352659e-002, -3.850946e-002, -2.588982e-002, -1.330100e-002, -5.930501e-003, -5.208497e-003, 8.885301e-004, 1.380883e-002, 2.421656e-002, 3.977045e-002, 4.201523e-002, 2.410656e-002, 3.224400e-002, 4.288632e-002, 3.337412e-002, 2.207140e-002, 1.011238e-002, 1.453055e-002, 1.720893e-002, 2.818820e-002, 9.932676e-003, -1.223864e-002, 1.008124e-002, -6.637518e-003, 1.539425e-003, -1.742909e-002, 8.912014e-003, -7.184836e-004, 6.298616e-003, 1.400788e-002, 1.715763e-002, 2.016326e-002, 2.627056e-002, 2.685868e-002, 1.935528e-002, 2.104613e-002, 1.770406e-002, 1.525210e-002, 4.877592e-003, -8.583873e-003, -2.293669e-002, -4.135328e-002, -6.233193e-002, -7.896308e-002, -8.670289e-002, -8.529422e-002, -7.738326e-002, -6.070364e-002, -4.273128e-002, -3.048623e-002, -2.092728e-002, -1.490722e-002, -3.755180e-003, 7.176131e-003, 1.810999e-002, 3.650625e-002, 4.705088e-002, 3.030186e-002, 1.952747e-002, 2.963783e-002, 2.971475e-002, 2.101234e-002, 5.357668e-003, 3.960233e-003, 1.663575e-002, 3.518277e-002, 6.735836e-003, -2.242667e-003, 1.069157e-004, -1.006143e-002, 2.563793e-003, -1.148430e-002, 1.188700e-002, -4.621880e-003, 4.358654e-004, 8.553966e-003, 1.069088e-002, 1.947880e-002, 2.922032e-002, 3.223770e-002, 3.001756e-002, 2.932967e-002, 2.072690e-002, 1.451054e-002, 1.189960e-003, -9.043697e-003, -2.136513e-002, -3.607466e-002, -5.651125e-002, -7.987930e-002, -9.291125e-002, -9.242511e-002, -8.375980e-002, -6.432863e-002, -3.875946e-002, -2.510291e-002, -1.877309e-002, -1.090807e-002, 5.009688e-003, 1.676087e-002, 3.015563e-002, 4.564328e-002, 5.504404e-002, 3.390273e-002, 5.734288e-003, 4.171928e-003, 1.745849e-002, 8.705542e-003, 9.137614e-004, -1.078243e-003, 4.911604e-003, 3.158346e-002, 4.243975e-003, 9.684447e-004, -7.208189e-003, -8.262945e-003, 9.098501e-003, -2.572262e-003, 1.479675e-002, -1.217332e-002, -1.284173e-002, -8.918583e-004, 5.632788e-003, 1.342698e-002, 2.564459e-002, 3.845035e-002, 4.442965e-002, 3.941381e-002, 2.650578e-002, 1.929548e-002, 1.223010e-002, 6.548978e-003, -3.016905e-003, -1.350174e-002, -2.929641e-002, -5.453851e-002, -7.449914e-002, -7.826388e-002, -6.611605e-002, -4.369288e-002, -1.697632e-002, 3.673926e-004, 5.154528e-003, 1.370616e-002, 2.500835e-002, 3.555903e-002, 4.901556e-002, 6.607201e-002, 6.844871e-002, 4.030944e-002, -3.784986e-003, -2.058883e-002, -3.936477e-003, -7.190867e-003, -8.619464e-003, -2.552893e-003, -9.703688e-003, 1.232119e-002, 2.580228e-003, 6.347642e-003, -8.947125e-003, 2.674810e-004, 1.764547e-002, 6.251362e-003, 1.765987e-002, -1.529817e-002, -2.501946e-002, -8.435226e-003, -5.037817e-004, 2.948437e-003, 1.060650e-002, 2.076530e-002, 3.257138e-002, 3.344738e-002, 2.808599e-002, 2.511372e-002, 2.417795e-002, 1.931157e-002, 7.993849e-003, 6.545943e-003, 5.514043e-003, -1.094891e-002, -3.414463e-002, -4.055316e-002, -2.526374e-002, -6.318531e-003, 5.195425e-003, 7.689225e-003, 3.305014e-003, 2.079779e-003, 7.052755e-003, 1.309393e-002, 2.226103e-002, 4.112342e-002, 5.831030e-002, 4.227694e-002, -1.081403e-002, -3.620211e-002, -2.163146e-002, -2.669865e-002, -1.769482e-002, -1.229403e-003, -1.540406e-002, -4.839548e-004, 1.700488e-004, 1.004658e-002, -3.016921e-003, 9.660290e-003, 2.321181e-002, 1.080933e-002, 2.233178e-002, -1.234231e-002, -


© ISO/IEC 2004 — All rights reserved

Copyright International Organization for Standardization
Provided by IHS under license with ISO
No reproduction or networking permitted without license from IHS
Not for Resale

2.683647e-002, -7.872389e-003, -3.472183e-003, -1.761097e-002, -2.466870e-002, -1.045215e-002, 8.623659e-003, 2.109705e-002, 2.502616e-002, 2.201365e-002, 1.339874e-002, 5.588891e-003, -6.470482e-003, 4.837689e-003, 1.912771e-002, 1.215501e-002, -2.292810e-003, -2.619336e-003, 7.676663e-003, 1.715561e-002, -1.760838e-003, -1.661542e-002, -2.441516e-002, -2.788499e-002, -3.007542e-002, -3.080497e-002, -3.087079e-002, -2.255924e-002, -2.190720e-003, 8.668418e-003, -2.689454e-002, -4.409605e-002, -2.563696e-002, -3.117747e-002, -2.203630e-002, 9.955327e-003, -9.514268e-003, -2.011802e-004, 3.766944e-003, 8.162112e-003, 2.557146e-003, 1.732731e-002, 3.117626e-003, 1.425705e-002, 2.529544e-002, -1.928463e-003, -1.868854e-002, -1.976869e-003, -6.568277e-003, -4.252250e-002, -5.105178e-002, -2.908661e-003, 2.823514e-002, 3.113986e-002, 2.074476e-002, 1.514444e-003, -1.098080e-002, -8.398007e-003, -5.183738e-003, 1.291969e-002, 3.423802e-002, 2.766143e-002, 1.571231e-002, 1.889198e-002, 2.741372e-002, 2.690766e-002, 1.265244e-002, 5.963371e-003, 8.551336e-004, -1.189685e-002, -1.366478e-002, -1.276260e-002, -1.389130e-002, -2.214701e-002, -2.422191e-002, -2.239860e-002, -3.922731e-002, -4.325854e-002, -1.695835e-002, -2.481692e-002, -1.638750e-002, 1.425893e-002, 3.483466e-003, 5.264101e-003, 8.012156e-003, 5.537649e-003, -1.454704e-002, 1.511385e-002, 8.569372e-003, 1.401324e-002, 1.894091e-002, 7.234757e-003, -8.432202e-003, 3.276126e-003, -2.356652e-003, -4.320760e-002, -3.817997e-002, 1.950761e-002, 3.259120e-002, 1.930408e-002, -1.064923e-002, -4.144793e-002, -6.339225e-002, -5.893159e-002, -2.038976e-002, 1.456537e-002, 3.937810e-002, 3.612249e-002, 2.480947e-002, 3.410976e-002, 3.864005e-002, 2.493821e-002, 2.509211e-002, 2.323820e-002, 1.463571e-003, -2.840764e-002, -3.096814e-002, -2.685270e-002, -2.206134e-002, -1.658153e-002, -1.073779e-002, -1.525625e-002, -3.255061e-002, -2.857233e-002, 2.258868e-003, -8.274479e-003, 7.207816e-004, 2.122259e-002, 1.050565e-002, 1.019866e-002, 1.406947e-002, 4.048791e-003, -1.546512e-002, 1.053435e-002, 7.109166e-003, 1.276581e-002, 8.132400e-003, 9.352093e-003, 6.285635e-003, 2.156395e-002, 2.704608e-002, -1.276075e-002, -6.493954e-003, 3.003267e-002, 2.948892e-002, -3.981279e-003, -4.496265e-002, -7.044563e-002, -8.188974e-002, -6.732059e-002, -3.526003e-002, -4.565364e-004, 1.656560e-002, 2.189782e-002, 2.545177e-002, 4.178128e-002, 3.020502e-002, -7.210290e-003, -8.862041e-003, 2.418929e-003, -8.717434e-003, -2.140820e-002, -3.157262e-002, -4.579334e-002, -3.821460e-002, -1.358789e-002, 2.681904e-004, -9.325592e-003, -2.077772e-002, -1.002127e-002, 2.608176e-002, 1.241552e-002, 4.998129e-003, 1.411156e-002, 4.462575e-003, 2.599520e-003, 9.729598e-003, -7.880864e-003, -1.500020e-002, 5.037728e-003, 2.464577e-003, 1.757975e-003, -1.919744e-003, 4.991811e-003, 1.335401e-002, 2.611078e-002, 4.335765e-002, 1.365683e-002, 1.690306e-002, 2.363856e-002, 3.750193e-003, 2.234946e-002, 4.781166e-003, -2.706729e-002, -2.717911e-002, 1.642725e-002, 1.393189e-002, -7.306665e-003, -2.017190e-002, -6.971281e-003, 9.324609e-003, 3.351846e-002, 1.401586e-002, -4.277620e-002, -5.257639e-002, -1.309083e-002, 3.797478e-002, 5.379383e-002, 3.994586e-002, 6.879361e-004, -9.022889e-004, 1.990518e-003, -7.692906e-004, 1.204140e-002, 1.122038e-002, 1.172153e-002, 3.957875e-002, 2.735717e-002, 1.101375e-002, -3.001565e-003, -2.409642e-002, -1.422620e-002, -5.856705e-003, -1.225851e-002, 2.194147e-003, 5.945931e-005, -8.943628e-003, -1.574391e-002, -1.139263e-002, 4.493546e-003, 1.276324e-002, 3.090540e-003, 3.137557e-002, 3.130044e-002, 2.068096e-002, -1.704857e-002, -4.920281e-002, -1.936616e-002, -1.649025e-002, -1.812435e-002, -4.454556e-003, 1.461892e-002, 1.903571e-003, -2.753514e-002, -4.682687e-002, -8.795644e-003, 1.011363e-002, 3.244653e-002, 2.685671e-002, -3.238564e-002, -6.696829e-002, -4.569804e-002, 1.296370e-002, 1.496672e-002, 1.669928e-002, -1.440857e-002, -4.795667e-002, -5.319764e-002, -3.606684e-002, 4.103934e-003, 2.183492e-002, 2.609684e-002, 2.934423e-002, 1.147163e-002, 3.208449e-003, -1.165802e-002, -3.864772e-002, -2.130840e-002, -1.772753e-002, 3.570994e-003, 5.942352e-003, 9.255724e-004, -1.242948e-002, -1.781301e-002, -8.821648e-003, 4.959208e-003, 4.453124e-003, -1.847311e-002, 8.682064e-003, 2.320232e-002, 6.727438e-003, -2.653524e-002, -4.442478e-002, -3.164829e-002, -5.613586e-003, 1.922738e-002, 3.444107e-002, 2.906121e-002, 9.962058e-003, -2.162774e-002, -3.788486e-002, -7.657147e-003, -1.051348e-002, 1.136304e-002, 2.102678e-002, -1.148404e-002, -3.733711e-002, -1.308532e-002, 3.198581e-002, 4.810669e-002, 4.177389e-002, 4.610909e-003, -4.351580e-002, -6.829603e-002, -4.973884e-002, -4.320712e-003, 2.880071e-002, 2.415919e-002, 1.258183e-002, -4.198733e-003, -8.701084e-003, -1.477762e-002, -2.388614e-002, -6.575221e-003, -1.722098e-002, 7.397545e-003, -1.322439e-003, -4.575467e-004, -1.593982e-002, -1.671017e-002, -9.403690e-003, 1.856985e-003, 7.239164e-004, -3.096047e-002, -1.127672e-002, 9.103177e-003, 9.144191e-003, -1.244756e-002, -1.381718e-002, 6.242692e-003, 3.273100e-002, 5.679069e-002, 6.542163e-002, 5.377801e-002, 1.593381e-002, -3.302437e-002, -3.476678e-002, -1.568435e-002, -3.939793e-002, -1.697193e-002, -1.312922e-003, 2.229289e-003, -2.274085e-002, 1.396578e-003, 5.285625e-002, 8.845897e-002, 8.725728e-002, 4.918697e-002, 8.477651e-003, -1.994281e-002, -2.103879e-002, 4.255650e-003, 2.420208e-002, 1.887258e-002, -1.277702e-003, -1.119080e-002, -1.650942e-002, -8.056961e-003, 1.087233e-004, 1.453393e-002, -7.671644e-003, 1.338737e-002, -1.238927e-003, 6.380653e-003, -1.139940e-002, -9.739709e-003, -2.992435e-003, 4.670646e-004, 2.003635e-003, -2.565533e-002, -1.461929e-002, 1.845743e-003, 1.130640e-002, -1.786832e-003, -3.240875e-003, 1.667288e-002, 4.651808e-002, 6.799101e-002, 7.150018e-002, 4.948528e-002, 7.518994e-003, -2.815747e-002, -2.926133e-002, -4.345462e-002, -

© ISO/IEC 2004 — All rights reserved


--`,,```,,,,````-`-`,,`,,`,`,,`---
Copyright International Organization for Standardization
Provided by IHS under license with ISO
No reproduction or networking permitted without license from IHS
Not for Resale

6.756420e-002, -3.985541e-002, -2.557967e-002, -1.174910e-002, -1.012551e-002, 6.384601e-003, 4.158844e-002, 8.356681e-002, 1.003811e-001, 8.130048e-002, 4.863793e-002, 1.513816e-002, 6.537922e-003, 1.727880e-002, 2.560584e-002, 1.475673e-002, -1.096111e-002, -1.769313e-002, -5.044276e-003, -2.086182e-003, 1.056399e-002, 2.761198e-002, -8.196316e-003, 1.582935e-002, 3.936358e-003, 1.147803e-002, -6.203396e-003, 5.019993e-003, 1.349411e-002, 5.617450e-003, 1.325356e-002, -1.741172e-002, -1.680823e-002, -8.781208e-003, 2.301009e-003, -3.570256e-003, -5.145180e-003, 8.512304e-003, 3.446902e-002, 5.215257e-002, 4.929003e-002, 3.279729e-002, 4.164323e-003, -2.372021e-002, -3.808360e-002, -6.859240e-002, -7.828046e-002, -4.671305e-002, -3.698162e-002, -3.010629e-002, -7.926120e-003, -1.512241e-003, 2.476528e-002, 5.285268e-002, 7.280500e-002, 6.815381e-002, 4.688503e-002, 2.230807e-002, 1.209307e-002, 1.503186e-002, 1.867880e-002, 4.332448e-003, -1.899719e-002, -1.241216e-002, 8.179761e-003, 4.679690e-003, 1.658910e-002, 2.390704e-002, -9.945543e-003, 1.139501e-002, 3.338859e-003, -1.768481e-002, -3.106728e-003, 8.841805e-003, 2.108503e-002, 5.953861e-003, 8.266427e-003, -1.059409e-002, -1.782416e-002, -1.656237e-002, -1.206097e-002, -2.119776e-002, -2.233144e-002, -5.064249e-003, 1.195892e-002, 2.195149e-002, 2.201536e-002, 1.595044e-002, 1.820632e-003, -1.970859e-002, -3.957541e-002, -6.538293e-002, -6.395573e-002, -3.619922e-002, -2.623479e-002, -3.440811e-002, -1.579780e-002, 2.737973e-003, 1.072500e-002, 2.605962e-002, 3.595501e-002, 3.549251e-002, 2.099026e-002, 1.263290e-003, -7.179383e-003, 1.471816e-003, 8.329605e-003, 1.473931e-003, -2.041152e-002, -1.075055e-003, 2.091333e-002, 1.462317e-002, 1.823817e-002, 4.169235e-003, -1.805062e-002, 5.628268e-003, 1.850870e-002, -2.098783e-002, 3.208296e-003, 7.381712e-003, 1.253848e-002, -8.549432e-003, -7.446332e-003, -9.002598e-003, -1.461811e-002, -1.430153e-002, -1.705877e-002, -2.744057e-002, -3.444836e-002, -2.337100e-002, -1.346023e-002, -2.646307e-003, 1.239188e-002, 2.235091e-002, 1.992976e-002, 1.420916e-003, -1.750390e-002, -3.478079e-002, -3.389515e-002, -1.091982e-002, 2.688481e-004, -1.823824e-002, -1.637776e-002, 1.553231e-002, 2.710371e-002, 2.430053e-002, 1.758385e-002, 8.282685e-003, -3.011445e-003, -1.872790e-002, -2.050569e-002, -1.121124e-002, 1.848057e-003, -5.204462e-003, -1.269780e-002, 7.819633e-003, 1.405441e-002, 1.688437e-002, 1.979517e-002, -1.350088e-002, -2.845737e-002, -1.139122e-003, 1.416247e-002, -2.189498e-002, 9.294958e-003, 2.396626e-003, -3.069946e-003, -2.739725e-002, -2.391056e-002, -5.651342e-003, -7.479656e-003, -1.122427e-002, -1.075210e-002, -2.188228e-002, -3.174374e-002, -2.386972e-002, -1.342964e-002, 9.220360e-004, 2.702567e-002, 4.589482e-002, 4.094563e-002, 1.793704e-002, -1.185555e-003, -1.774814e-002, -1.665075e-002, 2.195381e-003, 7.616373e-003, -5.204140e-003, -1.157480e-002, 1.541814e-002, 5.000331e-002, 3.980760e-002, 1.772815e-002, -5.484220e-003, -2.505352e-002, -3.963938e-002, -3.541727e-002, -1.587732e-002, -3.295953e-003, -5.384058e-003, -1.904257e-003, 9.906845e-003, -2.167853e-003, 1.441072e-002, 1.422355e-002, -2.279723e-002, -2.598604e-002, -2.054876e-003, 1.076726e-002, -2.724346e-002, 4.193262e-003, -6.136684e-003, -1.790559e-002, -4.040955e-002, -3.138704e-002, -4.884544e-003, -6.753801e-003, -9.840855e-003, -6.823824e-003, -1.728820e-002, -2.822863e-002, -2.353702e-002, -1.125298e-002, 8.527858e-003, 3.355536e-002, 5.479553e-002, 3.475026e-002, 1.852166e-003, -5.784439e-003, -1.183487e-002, -1.284988e-002, -7.060803e-003, -9.907559e-003, -1.876528e-002, -2.341959e-002, 6.253961e-004, 4.739380e-002, 5.140584e-002, 1.957384e-002, -1.178145e-002, -3.423636e-002, -4.742583e-002, -3.503809e-002, -1.151085e-002, -3.903595e-003, -3.987623e-003, 5.518113e-003, 5.619987e-003, -2.298157e-002, 7.261635e-003, 2.744586e-003, -2.523011e-002, -4.224818e-003, 2.403697e-003, 9.434175e-003, -2.343028e-002, 5.637226e-003, -9.999458e-003, -2.039806e-002, -3.802100e-002, -3.337306e-002, -2.828198e-003, -8.917143e-003, -7.794959e-003, -3.039308e-003, -9.270039e-003, -2.201719e-002, -2.271518e-002, -1.042023e-002, 8.076001e-003, 2.570124e-002, 3.073999e-002, 7.227222e-003, -6.633339e-005, 3.196194e-002, 3.898892e-002, -8.464122e-005, -9.676155e-003, 4.508639e-003, 1.463156e-002, 9.942168e-004, -2.218677e-003, 1.962456e-002, 3.834319e-002, 1.918494e-002, -1.796265e-002, -4.311301e-002, -4.925965e-002, -3.292376e-002, -1.281880e-002, -7.859693e-003, -1.269611e-003, 1.240333e-002, -1.180307e-002, -4.008386e-002, -7.314815e-003, -3.535131e-003, -2.099115e-002, 2.293718e-003, 4.023935e-003, 8.065666e-003, -2.366397e-002, 3.960181e-003, -1.004086e-002, -1.504746e-002, -1.861353e-002, -1.510855e-002, 1.749711e-002, 1.957512e-003, -6.348056e-003, 1.595281e-003, 8.026946e-004, -1.385087e-002, -2.287884e-002, -1.483374e-002, -3.220121e-003, -1.902184e-003, -1.137710e-002, -1.943217e-002, -2.368947e-003, 2.198761e-002, 3.070299e-002, 1.866077e-002, 1.508577e-002, 1.348456e-002, 1.664385e-002, 7.922528e-003, -7.592120e-003, -1.563419e-002, -2.635208e-003, 7.050249e-006, -2.360315e-002, -4.751358e-002, -4.887917e-002, -2.794119e-002, -1.330488e-002, -1.006259e-002, 3.212146e-003, 9.363383e-003, -1.848934e-002, -3.764434e-002, -4.187827e-003, 4.735860e-003, -9.771866e-003, 6.423827e-003, 6.145225e-003, 6.095566e-003, -2.359933e-002, 5.203274e-004, -1.234358e-002, -1.384931e-002, -3.316678e-003, 7.848366e-003, 3.595112e-002, 1.025556e-002, -3.644526e-003, 4.842578e-003, 8.418772e-003, -4.465880e-003, -1.675789e-002, -1.629401e-002, -1.523444e-002, -2.259780e-002, -3.255867e-002, -3.322486e-002, -1.639918e-002, 8.575151e-003, 2.059471e-002, 2.554632e-002, 2.123011e-002, 1.344345e-002, 2.046127e-002, 9.347186e-003, -8.266328e-003, -2.988410e-002, -2.822320e-002, -2.208693e-002, -2.958323e-002, -4.418972e-002, -3.676378e-002, -1.707767e-002, -1.211434e-002, -6.155462e-003, 9.762902e-003,


© ISO/IEC 2004 — All rights reserved

Copyright International Organization for Standardization
Provided by IHS under license with ISO
No reproduction or networking permitted without license from IHS
Not for Resale

8.576342e-003, -6.995146e-003, -2.017444e-002, 3.361649e-003, 1.082919e-002, -2.895974e-003, 3.753965e-003, 4.671417e-004, 3.559055e-003, -2.381356e-002, -3.871132e-003, -8.637260e-003, -5.645286e-004, 8.739093e-003, 6.636855e-003, 3.458932e-002, 1.405055e-002, -6.664170e-003, 5.203242e-003, 1.152165e-002, 5.530160e-003, -1.092807e-002, -1.642113e-002, -1.543471e-002, -1.254167e-002, -2.054146e-002, -2.006799e-002, -5.336727e-003, 2.315950e-002, 3.749476e-002, 3.846396e-002, 3.374976e-002, 2.122093e-002, 1.943173e-002, 1.177908e-002, -2.330441e-003, -1.827904e-002, -2.290486e-002, -2.951270e-002, -3.263004e-002, -3.601192e-002, -1.930553e-002, -4.426836e-003, -9.638268e-003, -3.307973e-003, 1.419861e-002, 2.831975e-003, 4.846739e-003, -3.447623e-003, 1.160017e-002, 1.956177e-002, -9.947123e-005, -8.443358e-004, -7.534051e-003, 2.464930e-003, -8.583781e-003, -3.530895e-003, -4.586453e-003, 8.828519e-003, 2.307311e-002, 1.422390e-002, 2.376169e-002, 1.593566e-002, -7.374651e-003, 1.411481e-003, 1.298104e-002, 1.342108e-002, -1.233379e-003, -8.809397e-003, 1.417471e-003, 1.067097e-002, 3.768966e-003, 1.540745e-004, 8.973647e-003, 2.061886e-002, 2.495875e-002, 2.248708e-002, 1.940944e-002, 1.071456e-002, -2.926404e-003, -8.140989e-003, -1.166358e-002, -1.432888e-002, -1.186024e-002, -1.633483e-002, -2.552083e-002, -2.165038e-002, -2.003869e-003, 7.527136e-003, -2.471030e-003, 6.481749e-004, 1.250086e-002, -8.220379e-003, 1.076171e-002, 1.156145e-002, 1.772761e-002, 1.723999e-002, -5.304398e-003, -8.374015e-003, -1.926915e-002, -1.373522e-002, 5.038179e-003, 8.147337e-005, -5.985086e-003, 6.446701e-003, 2.042169e-002, 1.047105e-002, -6.865015e-004, 7.301414e-003, -7.775047e-003, -4.833898e-003, 1.064933e-002, 1.580373e-002, 6.391693e-003, 2.905879e-003, 2.332773e-002, 3.221930e-002, 1.835674e-002, 4.355760e-003, 7.146126e-003, 1.600760e-002, 1.865587e-002, 1.612079e-002, 1.096614e-002, 1.446512e-002, 8.367533e-003, -2.068469e-005, -1.389716e-002, -1.305829e-002, 5.272230e-003, 1.053042e-002, -1.407061e-003, -1.291950e-003, 9.388592e-003, 9.668639e-003, 2.986193e-003, 5.229336e-003, 2.312277e-003, -2.334930e-002, 9.582301e-003, 1.192850e-003, 5.659793e-003, -5.185756e-004, -1.265330e-002, -7.159590e-003, -2.277131e-002, -1.666281e-002, 3.660448e-003, 2.123117e-003, -1.028290e-002, -4.241589e-003, 6.308780e-003, -3.749165e-005, -1.514519e-002, -4.956467e-003, -8.564427e-003, -7.476163e-003, 1.001441e-002, 1.614254e-002, 1.118284e-002, 1.225749e-002, 3.162266e-002, 2.824386e-002, 5.193761e-003, -6.754828e-003, 5.192174e-003, 2.266607e-002, 2.890253e-002, 2.955447e-002, 2.103558e-002, 2.322272e-002, 1.289398e-002, -5.243004e-003, -2.546293e-002, -3.241803e-002, -5.638132e-003, 1.927541e-002, 2.014215e-002, 1.965586e-002, 1.698277e-002, 8.783143e-003, 5.204760e-003, 8.669722e-003, -1.724184e-002, -2.362018e-002, 8.097998e-003, -7.587996e-003, -3.372325e-003, -3.673668e-003, -1.305991e-002, -6.734726e-003, -1.822075e-002, -1.429629e-002, 4.790159e-003, 4.400738e-003, -1.066323e-002, -1.371996e-002, 6.943900e-003, 6.787606e-003, -1.065371e-002, -1.284424e-002, 3.414402e-003, -6.361340e-004, 8.293409e-003, 1.405828e-002, 8.568201e-003, 6.766092e-003, 1.673272e-002, 1.491094e-002, 4.150861e-003, -7.788739e-004, 5.554423e-003, 1.063063e-002, 1.166489e-002, 1.275179e-002, 6.089949e-003, 2.437408e-003, -9.930895e-003, -2.951637e-002, -4.455193e-002, -5.020162e-002, -2.983098e-002, 1.877267e-003, 1.884621e-002, 2.144901e-002, 1.322709e-002, 2.498725e-003, 5.804460e-003, 5.305878e-003, -2.801955e-002, -5.331499e-003, 1.599720e-002, -5.810386e-003, 3.002022e-003, 6.366893e-003, -3.875178e-003, -4.318146e-003, -1.105074e-002, -1.214738e-002, 6.768466e-003, 5.638153e-003, -1.141884e-002, -1.567821e-002, 6.238713e-003, 1.485278e-002, 4.161638e-003, -7.991919e-003, 9.975587e-003, 7.579608e-003, 6.562306e-003, 8.879546e-003, -1.948819e-003, -3.032270e-003, 1.030101e-003, 3.660579e-003, 1.042929e-002, 8.234196e-003, 8.042972e-003, 7.502023e-003, 5.879029e-003, 7.891270e-003, 6.779148e-003, 7.423185e-003, 1.433609e-003, -7.414205e-003, -1.776058e-002, -2.672803e-002, -2.542999e-002, -5.125106e-003, 1.383461e-002, 1.457943e-002, 2.145918e-003, -4.161310e-003, 7.791294e-003, -4.229182e-003, -2.705323e-002, 4.704789e-003, 1.548525e-002, -1.565390e-003, 6.035455e-003, 4.835886e-003, 1.250624e-002, 6.679959e-003, 1.658907e-003, -9.858515e-003, 1.081246e-002, 9.681013e-003, 2.122876e-003, -1.175220e-002, 4.279071e-003, 1.639514e-002, 2.106053e-002, 9.696372e-003, 5.081924e-003, 7.047106e-003, 6.768364e-003, 7.474722e-003, -3.861041e-003, -4.065689e-003, 1.709889e-003, 1.104408e-002, 5.307994e-003, -6.103081e-003, -1.395287e-002, -2.289551e-002, -2.700609e-002, -2.200198e-002, -1.504506e-002, -6.201802e-003, 9.074305e-004, 8.213458e-003, 1.052465e-002, 2.458803e-003, -1.043849e-002, -3.369840e-003, 1.171315e-002, 9.970678e-003, -2.730267e-003, -1.718829e-003, 1.357114e-002, -9.831612e-003, -1.425721e-002, 1.533642e-002, 7.989567e-003, -5.648276e-003, 2.053979e-003, 3.327505e-003, 1.172593e-002, 9.949501e-003, 5.609175e-003, -8.203953e-003, 1.489663e-002, 9.692645e-003, 1.490357e-002, -3.129204e-003, -2.505459e-003, 3.150186e-003, 2.237012e-002, 2.405613e-002, 8.048637e-003, -2.042016e-003, 6.333417e-003, 7.302482e-003, 3.127132e-004, -2.118242e-005, 1.476439e-002, 2.551129e-002, 1.800779e-002, 6.763387e-003, -1.186833e-003, -4.728076e-003, -1.059675e-002, -8.891910e-003, -5.731738e-003, -5.643965e-005, 1.005233e-002, 2.129273e-002, 2.123541e-002, 1.408830e-002, 3.991309e-003, 8.387940e-003, 1.180366e-002, 6.271964e-003, -6.970598e-003, 6.831041e-003, 1.535263e-002, -7.351618e-003, 3.535718e-004, 1.663365e-002, -2.403488e-004, -8.694961e-003, 5.393477e-003, 4.277874e-003, 7.749886e-003, 1.002165e-002, 8.748674e-003, -9.005359e-003, 9.279740e-003, 4.855601e-003, 1.810925e-002, 6.011680e-003, -6.226381e-003, -1.341937e-002, 1.705676e-002,

© ISO/IEC 2004 — All rights reserved


Copyright International Organization for Standardization
Provided by IHS under license with ISO
No reproduction or networking permitted without license from IHS
Not for Resale

3.186879e-002, 1.867705e-002, -6.911181e-003, -1.254513e-003, 9.032039e-003, 9.911389e-004, 1.834870e-003, 1.733976e-002, 2.572126e-002, 2.179813e-002, 1.130207e-002, 9.755728e-005, -4.556708e-003, -6.165731e-003, -5.796649e-003, -1.068412e-003, 9.564572e-004, 4.832297e-003, 1.423149e-002, 1.767461e-002, 1.264768e-002, 5.309494e-003, 6.608155e-003, 4.435539e-003, -2.335081e-003, -3.052032e-003, 1.504164e-002, 7.790140e-003, 5.328886e-003, 1.735223e-002, 1.565587e-002, -5.340591e-003, -1.267204e-002, 7.479209e-003, 3.352034e-003, 1.300701e-003, 7.698119e-003, 8.359221e-003, -9.721428e-003, 4.011022e-003, 1.873442e-002, 1.359117e-002, 7.267084e-003, -8.833428e-003, -2.394651e-002, -5.148086e-003, 1.926657e-002, 1.559223e-002, -1.089854e-002, -9.570111e-003, 7.587688e-003, -2.570056e-003, -3.832449e-003, 7.495501e-003, 1.381707e-002, 1.261108e-002, 8.190494e-003, -5.052890e-003, -1.329482e-002, -1.789996e-002, -1.663295e-002, -9.976720e-003, -5.762138e-003, -3.641697e-003, 1.551621e-003, 2.707049e-003, -6.249935e-004, -3.374556e-003, -5.666489e-003, -8.787406e-003, -1.087661e-002, -2.899384e-003, 1.252656e-002, 7.923849e-003, 1.063344e-002, 2.003538e-002, 1.406094e-002, -3.277388e-003, -1.268387e-002, -4.002600e-004, -6.308207e-003, -6.324114e-003, 2.536656e-003, 6.671447e-003, -2.723924e-003, 4.063690e-003, 1.407274e-002, 8.622352e-003, 2.988721e-003, -6.610208e-003, -2.628732e-002, -1.579351e-002, 1.487122e-002, 1.384938e-002, -1.037764e-002, -1.200824e-002, 1.010023e-002, 5.365652e-003, -5.727389e-003, -2.973625e-004, 9.534506e-003, 9.303949e-003, 3.672455e-003, -4.047849e-003, -7.412348e-003, -8.936748e-003, -8.202903e-003, -2.496312e-003, 8.926853e-004, 3.218468e-003, 4.710745e-004, -3.186360e-003, -7.236317e-003, -9.662138e-003, -1.240922e-002, -1.421368e-002, -1.054181e-002, 1.004777e-003, 1.079793e-002, 8.136682e-003, 3.888827e-003, 1.660568e-002, 1.895197e-002, 9.693449e-003, -3.426018e-003, -2.789114e-003, -1.159306e-002, -7.397329e-003, -8.749080e-003, 2.239681e-003, 6.134782e-003, -1.185035e-003, 4.154300e-003, 1.355465e-003, 1.936173e-003, -5.310795e-004, -1.110289e-002, -9.658022e-003, 1.350585e-002, 8.412137e-003, -1.891772e-002, -1.418763e-002, 1.051837e-002, 9.867295e-003, -8.851057e-003, -8.262236e-003, -1.394891e-003, 6.114479e-004, -3.196295e-003, -7.213304e-003, -4.944861e-003, -8.354565e-004, 1.461656e-003, 5.058239e-003, 1.161838e-002, 1.351620e-002, 5.246121e-003, 7.237727e-004, 2.444235e-004, -7.183558e-003, -1.397197e-002, -1.285449e-002, -5.057914e-003, 3.973164e-003, 1.306372e-002, 4.266994e-003, 1.316313e-003, 9.673504e-003, 9.566578e-003, 3.993073e-003, -6.789343e-004, -4.855293e-003, -1.253272e-002, 3.828969e-004, -1.147384e-002, 3.361863e-003, 2.360768e-003, -1.480147e-002, -6.804962e-003, -8.459577e-003, 1.496990e-004, 7.634609e-003, -1.196578e-002, -1.588035e-002, 2.277530e-003, -3.327727e-003, -2.364927e-002, -1.182714e-002, 5.627575e-003, 1.010962e-002, -4.145848e-003, -9.528413e-003, -1.272326e-002, -1.379609e-002, -1.570211e-002, -1.469569e-002, -1.239217e-002, -8.518659e-003, -6.030592e-003, -2.361051e-003, 6.005318e-003, 8.333813e-003, 5.578168e-003, 5.817793e-003, 4.050594e-003, -7.237438e-003, -1.247258e-002, -6.255780e-003, 1.801720e-003, 1.326924e-003, 2.975474e-003, -6.023996e-003, -1.033059e-002, 3.874692e-003, 3.495999e-003, 6.644558e-003, -1.520820e-003, -3.827890e-003, -1.283835e-002, 8.617063e-003, -1.777680e-004, 6.470591e-003, 1.187340e-002, -8.570487e-003, -4.926270e-004, 4.366606e-004, 1.747858e-002, 1.475283e-002, -1.292204e-002, -1.645161e-002, 7.008680e-003, 1.204663e-003, -8.810142e-003, 4.946700e-003, 1.279517e-002, 1.695906e-002, 1.214177e-002, 5.647253e-003, -2.653858e-003, -9.162157e-003, -1.146740e-002, -1.103662e-002, -5.163724e-003, -4.439865e-003, -1.359281e-003, 2.037491e-003, 6.933718e-003, 8.214238e-003, 1.205341e-002, 1.201607e-002, 8.323749e-003, 2.291405e-003, 5.673383e-003, 1.235270e-002, 7.963562e-003, -3.041613e-003, 1.370697e-003, -4.431991e-003, -7.745256e-003, 3.255395e-003, -7.507764e-003, 4.503184e-003, 1.129699e-002, 6.699148e-003, 4.509011e-003, 1.219968e-002, 6.858126e-003, 8.922622e-003, 3.560971e-003, -9.180911e-003, -3.066518e-003, -1.168777e-003, 1.439987e-002, 1.020007e-003, -1.804895e-002, -1.492476e-002, 1.095996e-002, -2.678097e-003, -4.679097e-003, 3.932334e-003, 3.144309e-003, 1.415367e-003, 7.184082e-003, -2.133686e-003, -9.396461e-003, -1.347393e-002, -1.798304e-002, -1.644220e-002, -1.391300e-002, -1.030255e-002, -7.328075e-003, -6.328074e-003, -7.814460e-003, -7.105281e-003, -3.803550e-003, 1.592147e-003, 3.913515e-003, 6.812745e-003, 1.464306e-002, 1.615386e-002, 8.308536e-003, -1.052209e-003, -1.591543e-003, 6.641242e-004, -1.041716e-003, -7.731208e-004, -6.424282e-003, 3.839762e-003, 1.573246e-002, 9.607445e-003, 8.720746e-003, 2.742792e-002, 1.766062e-002, 1.742821e-002, -2.098239e-003, -1.291410e-002, 4.378462e-003, 1.451145e-002, 2.655983e-002, 1.751503e-002, 9.774939e-003, 1.541866e-002, 2.902902e-002, 1.413753e-002, 1.015104e-002, 1.089627e-002, 1.163991e-002, 1.007114e-002, 1.624907e-002, 1.222171e-002, 5.990103e-003, 6.623772e-003, 3.899741e-003, 4.765599e-003, 1.092239e-002, 1.088919e-002, 1.126336e-002, 9.735884e-003, 7.662483e-003, 4.023861e-003, -4.772081e-005, 4.092849e-004, 3.671429e-003, 3.581179e-003, 1.157672e-002, 1.667080e-002, 1.907769e-002, 2.675227e-003, -2.851287e-003, 1.196438e-002, 1.745841e-002, 4.288922e-003, -1.274120e-002, -1.886934e-003, 7.652760e-003, -2.207707e-003, 4.150238e-003, 9.220847e-003, 1.350905e-002, 1.475181e-002, -5.020309e-003, -1.039567e-002, 6.850081e-003, 1.233629e-002, 9.419606e-003, 5.861990e-003, 6.694155e-003, 9.948904e-003, 4.130299e-003, 2.603483e-004, 1.460388e-003, 2.990732e-003, 8.755056e-003, 2.919656e-003, 4.079747e-003, -1.297026e-003, -3.550402e-003, -5.013546e-003, -2.048049e-003, -1.011166e-003, 3.100466e-003, 5.410965e-003, 7.603970e-003, 8.962479e-003,


© ISO/IEC 2004 — All rights reserved

--`,,```,,,,````-`-`,,`,,`,`,,`---

Copyright International Organization for Standardization
Provided by IHS under license with ISO
No reproduction or networking permitted without license from IHS
Not for Resale

3.698429e-003, -3.244068e-003, -9.368124e-003, -1.094688e-002, -1.169163e-002, -8.709647e-003, 2.322200e-003, 1.537553e-002, 1.922139e-002, -1.001223e-004, -1.138047e-002, 1.121261e-002, 2.259555e-002, 9.924820e-003, -8.676748e-003, -3.092051e-003, -1.360102e-002, -2.382363e-002, -7.852229e-003, -1.242075e-003, 6.291301e-003, 5.031357e-003, -8.654552e-003, -1.311462e-002, -1.660259e-003, -1.569345e-002, -2.272459e-002, -8.087194e-003, 6.824153e-003, -6.426598e-003, -1.565098e-002, -6.531753e-003, -5.426115e-003, -8.938018e-003, -7.178032e-003, -7.600170e-003, -4.869029e-003, -1.105356e-002, -2.066866e-002, -2.545984e-002, -2.101004e-002, -1.864678e-002, -1.499454e-002, -1.014292e-002, -5.246852e-003, -2.449838e-003, -7.436202e-003, -1.497370e-002, -2.442205e-002, -3.055719e-002, -2.892483e-002, -2.065399e-002, -1.294895e-002, -1.268835e-003, 7.603500e-003, -6.728593e-003, -2.235928e-002, -1.491858e-002, -3.860862e-003, 1.525428e-003, 1.137650e-003, 7.002064e-003, -1.708114e-002, -3.767989e-002, -2.796870e-002, -2.128887e-002, -9.062058e-003, -7.580241e-003, 5.626725e-003, 4.657005e-003, 2.243397e-003, -6.184231e-003, -1.120447e-003, 1.842312e-002, 2.476108e-002, -2.171716e-003, -9.556794e-003, 1.471126e-002, 1.836459e-002, 1.178683e-002, 8.528619e-003, 6.499433e-003, 9.349065e-003, 8.285798e-003, -3.648191e-005, -6.758585e-003, -7.569398e-003, -5.793350e-003, -1.820520e-003, 5.931927e-003, 1.403947e-002, 1.933125e-002, 1.735944e-002, 7.850528e-003, -3.940620e-003, -1.492598e-002, -1.919552e-002, -1.744944e-002, -5.439493e-003, 2.261659e-003, 1.214689e-002, 9.067806e-003, 5.263463e-003, 8.522528e-003, -2.016226e-003, -1.749826e-003, 1.497743e-002, 2.774889e-002, 1.486808e-002, -1.419163e-003, 3.244453e-003, 5.958468e-003, 9.046350e-003, 9.329949e-003, 1.705079e-002, 2.401578e-003, -1.764088e-002, -3.333033e-002, -3.206293e-002, -1.855985e-002, -1.441516e-002, -3.396359e-002, -2.750692e-002, -8.044757e-003, -3.012874e-003, -7.273527e-003, -1.040577e-002, -1.516747e-002, -8.283358e-003, -4.144067e-004, 3.371826e-003, 8.040040e-004, 4.251928e-004, 3.277292e-003, 8.601467e-003, 1.490436e-002, 2.164861e-002, 2.812879e-002, 2.679657e-002, 1.726504e-002, 2.415316e-003, -1.501831e-002, -2.537218e-002, -2.351332e-002, -1.657972e-002, -1.489021e-002, -1.107288e-002, 4.101937e-003, 1.495841e-002, 1.735966e-002, 6.385674e-003, 6.031730e-004, 7.999412e-003, 1.358635e-002, 1.379546e-003, -6.210677e-003, -1.056429e-003, 1.127905e-002, 1.403081e-002, 1.994198e-002},
{9.839237e-003, -2.028013e-002, -7.695264e-003, -1.405133e-002, -9.585216e-003, -4.826037e-003, -9.281614e-003, -1.185602e-002, -9.394807e-003, 5.071110e-003, 1.141600e-002, 2.774652e-003, -6.475770e-003, -4.716941e-003, -4.175156e-004, -5.264691e-005, -6.429671e-004, 4.837687e-004, 5.228975e-003, 6.809527e-003, 6.909136e-003, 3.675788e-003, 2.698630e-003, -8.263767e-004, -2.317455e-003, -5.717480e-004, -4.200865e-003, -2.480683e-003, 2.522744e-003, 7.204142e-003, 1.138721e-002, 1.409367e-002, 4.231741e-003, -5.488690e-003, -9.930049e-003, -7.786738e-003, 5.628027e-003, 1.112573e-002, 1.856481e-003, -9.578295e-003, -8.949615e-003, -4.301855e-003, -7.813293e-003, -6.213714e-003, 5.991516e-003, 2.017180e-002, 1.130931e-002, -2.528479e-002, -1.238650e-002, -1.337839e-002, -1.674721e-003, -6.029174e-004, -9.995579e-003, -1.272709e-002, 7.891626e-003, 2.500892e-002, 1.949736e-002, 6.013254e-003, 1.988758e-003, -1.975171e-003, -1.051762e-002, -5.949437e-003, -7.012082e-004, 7.201855e-003, 8.581793e-003, 7.192239e-003, 3.215642e-003, 4.842679e-004, -1.607927e-003, -1.779641e-003, 1.825322e-003, 2.334734e-003, -3.446309e-003, -7.269403e-003, -7.442293e-003, -6.007171e-003, -2.565963e-003, 7.598594e-003, 1.033829e-002, 2.570975e-003, -3.943872e-003, -7.939825e-003, -2.463030e-003, 9.044647e-003, 1.357919e-002, -9.062940e-003, -2.183376e-002, -1.407901e-002, -1.408889e-002, -1.463376e-002, -2.857001e-003, 9.809885e-003, 1.157366e-002, -3.069603e-002, -1.365961e-002, -1.130289e-002, 2.766853e-003, 1.355919e-004, -1.205964e-002, -7.210177e-003, 1.155645e-002, 2.716621e-002, 1.996143e-002, 1.130915e-002, 5.307954e-003, 1.952011e-003, 1.619046e-003, 7.016942e-003, 1.512385e-002, 1.603093e-002, 8.416585e-003, -1.697153e-003, -7.656509e-003, -1.272695e-002, -1.414578e-002, -9.190134e-003, 1.256216e-003, 7.049992e-003, 8.113748e-003, 3.637009e-003, 4.287002e-003, -1.009641e-004, -1.323641e-003, 2.599277e-003, 7.663265e-003, 9.761565e-003, 4.457698e-003, -2.378119e-003, -3.814477e-003, 1.163163e-003, 3.312096e-003, -4.422402e-003, -1.266986e-002, -9.412251e-003, -5.875094e-003, -1.242400e-002, -9.603143e-003, 9.808889e-003, 6.908145e-003, -3.385739e-002, -1.555908e-002, -1.163337e-002, -1.181181e-003, 6.150345e-004, -1.419185e-002, -1.414303e-002, 6.676608e-003, 1.654725e-002, 3.658359e-003, -8.832005e-003, -4.224353e-003, 3.328388e-003, 7.440978e-003, 6.961736e-003, 6.219020e-003, 3.958492e-003, -5.816470e-003, -1.935204e-002, -2.526703e-002, -2.608914e-002, -2.464647e-002, -1.768460e-002, -7.025339e-003, 1.873973e-003, 7.182765e-003, 8.961041e-003, 8.742437e-003, 4.682691e-003, -2.264917e-003, -2.588348e-003, -7.332328e-004, 2.000479e-003, -1.844526e-003, -8.724430e-003, -9.823046e-003, -4.445389e-003, -7.032492e-003, -1.092121e-002, -6.115959e-003, 6.253355e-003, 7.575507e-003, -4.974795e-003, -9.426584e-003, 1.045188e-002, 4.175547e-002, -7.017260e-004, 1.229156e-002, 6.100436e-003, 1.704784e-002, 7.215772e-003, -1.854448e-002, -1.441115e-002, 7.091782e-003, 5.374167e-003, -1.954443e-002, -2.371897e-002, -6.869207e-003, -5.255153e-003, -3.979905e-003, -1.761311e-003, -2.065504e-003, -6.075662e-003, -1.601853e-002, -2.591632e-002, -3.150599e-002, -3.157502e-002, -2.843687e-002, -2.032418e-002, -6.684539e-003, 7.177581e-003, 1.609254e-002, 1.650284e-002, 1.512713e-002, 1.372576e-002, 3.346255e-003, -2.857711e-003, -2.872236e-003, -5.184791e-003, -3.210839e-004, -5.582959e-003, -1.809595e-002, -1.198857e-002, -1.277773e-003, -1.067872e-002, -

© ISO/IEC 2004 — All rights reserved


Copyright International Organization for Standardization
Provided by IHS under license with ISO
No reproduction or networking permitted without license from IHS
Not for Resale

5.117604e-003, 2.499498e-002, 2.625403e-002, 1.018410e-002, -3.003512e-003, 6.998420e-003, 3.647987e-002, -5.812423e-003, -2.433053e-004, -5.880007e-003, 1.191910e-002, -1.080507e-002, -2.604662e-002, -6.357245e-003, 6.157070e-003, -7.446321e-003, -2.186696e-002, -1.175766e-002, -4.706042e-003, -6.287886e-003, -6.712015e-005, 9.685351e-003, 8.501023e-003, 3.065725e-003, -5.851018e-003, -1.169433e-002, -2.034519e-002, -2.441443e-002, -2.401816e-002, -1.651561e-002, -8.129011e-003, 3.301386e-003, 9.179727e-003, 9.272976e-003, 6.121345e-003, 7.069757e-003, 8.467331e-003, 2.922711e-003, -6.793601e-003, -5.974777e-003, -1.831687e-003, 3.378930e-003, -1.185461e-002, -9.809469e-003, 1.189891e-002, 1.569597e-002, -8.106748e-003, 1.281372e-002, 3.309510e-002, 3.108404e-002, 1.011069e-002, 1.247655e-002, 3.257413e-002, -1.297704e-002, -1.029713e-002, -1.338852e-002, 3.024247e-003, -2.227834e-002, -2.315837e-002, -5.680763e-003, -1.705214e-003, -1.771951e-002, -1.758670e-002, -9.949677e-003, -1.041378e-002, -3.080153e-003, 7.370611e-003, 1.488895e-002, 2.104319e-002, 1.663363e-002, 1.221377e-002, 3.355179e-003, -1.130229e-002, -2.485658e-002, -3.481010e-002, -3.690247e-002, -3.371478e-002, -2.555065e-002, -2.200509e-002, -1.694205e-002, -1.554824e-002, -1.534059e-002, -1.040229e-002, -2.705489e-003, -7.871026e-003, -1.294195e-002, -1.373255e-002, -4.472022e-004, -3.570479e-003, -8.433018e-003, 5.256941e-003, 2.836421e-002, 5.486823e-003, -8.372561e-003, 2.098151e-002, 2.881254e-002, 8.568613e-003, 8.130605e-003, 2.634182e-002, -1.818057e-002, -1.426302e-002, -1.259959e-002, -4.929426e-003, -2.175188e-002, -1.632243e-002, -1.828344e-003, -1.931868e-003, -1.137671e-002, -7.111610e-003, -8.273233e-003, 5.847608e-004, 9.295481e-003, 1.828399e-002, 2.955942e-002, 4.367401e-002, 4.528410e-002, 4.677193e-002, 3.972013e-002, 1.779015e-002, -8.926905e-003, -2.986823e-002, -4.277578e-002, -4.716512e-002, -4.462792e-002, -3.856037e-002, -3.430988e-002, -2.871366e-002, -2.309613e-002, -1.621802e-002, -9.216954e-003, -2.450121e-003, -2.455902e-003, -7.540612e-003, -8.523862e-003, 3.898062e-003, 2.166885e-003, -2.861296e-003, 1.633897e-002, 2.272562e-002, -7.132124e-003, -5.551139e-003, 9.498874e-003, 2.763692e-003, 6.187875e-003, 1.485208e-002, -2.482491e-002, -1.842289e-002, -1.136297e-002, -2.036031e-003, -1.472200e-002, -1.168188e-002, 6.331885e-003, 2.567678e-003, -3.581310e-003, 8.673219e-004, 1.178385e-003, 8.682302e-003, 1.396610e-002, 2.178625e-002, 3.875445e-002, 6.409276e-002, 7.662756e-002, 8.479726e-002, 7.919100e-002, 5.366380e-002, 2.030259e-002, -7.913081e-003, -2.600793e-002, -3.352902e-002, -3.713647e-002, -3.046961e-002, -2.410250e-002, -1.613089e-002, -1.033345e-002, -3.854764e-003, 1.612827e-003, 7.613418e-003, 1.536307e-002, 1.160526e-002, -2.500186e-003, -3.188318e-003, 7.578862e-003, 2.380919e-003, 6.557092e-004, 2.028063e-002, 5.144137e-003, -1.199195e-002, -9.309001e-003, -1.256668e-002, 2.947232e-004, 7.825497e-003, -2.302283e-002, -1.713333e-002, -1.424885e-002, 4.864101e-003, -1.234964e-002, -9.848068e-003, 1.319409e-002, 6.138541e-003, 3.455252e-003, 6.827779e-003, 7.559335e-003, 7.326664e-004, 4.299696e-004, 7.555155e-003, 3.034362e-002, 5.858735e-002, 8.134143e-002, 9.771480e-002, 9.654673e-002, 7.865915e-002, 4.760538e-002, 1.822381e-002, -2.917549e-003, -1.434093e-002, -1.644319e-002, -1.381316e-002, -9.917410e-003, -4.445533e-003, 2.397974e-003, 7.849857e-003, 1.241906e-002, 1.032970e-002, 1.702391e-002, 2.844429e-002, 1.170979e-002, -4.231835e-003, 9.633596e-004, 1.039478e-002, -4.406859e-003, 6.095551e-003, 6.921558e-003, -1.246060e-002, -2.595164e-002, -1.659176e-002, -1.139758e-002, 6.609359e-003, 1.072178e-002, -1.521142e-002, -1.579535e-002, 7.502195e-003, -2.073650e-002, 3.893806e-003, 1.505762e-002, 4.100052e-003, 4.752188e-003, 9.956141e-003, -2.576066e-003, -1.752094e-002, -2.379558e-002, -1.684172e-002, 4.598889e-003, 3.186807e-002, 6.278990e-002, 8.900668e-002, 9.513812e-002, 8.413865e-002, 6.039697e-002, 3.346143e-002, 1.004714e-002, 1.287689e-003, -7.598137e-004, -2.232182e-003, 2.703361e-004, 2.273000e-003, 9.186756e-003, 1.291222e-002, 9.321528e-003, -1.468005e-004, 3.706214e-003, 1.952177e-002, 2.053398e-002, 2.640262e-003, -5.412018e-003, 4.194977e-003, 1.769012e-003, -1.106151e-002, -5.042489e-003, -1.350030e-002, -3.511062e-002, -2.462112e-002, -1.887861e-002, 1.174114e-002, 2.261799e-002, -1.322154e-002, -8.167970e-003, 8.298367e-003, -1.689062e-002, 8.008076e-003, 9.469848e-003, -3.105790e-003, 1.444277e-003, 3.376988e-003, -1.676556e-002, -3.713350e-002, -4.948126e-002, -4.031356e-002, -2.269863e-002, 6.251643e-003, 3.827465e-002, 6.715483e-002, 7.966683e-002, 7.769506e-002, 6.410012e-002, 4.106074e-002, 1.744569e-002, 1.151068e-002, 1.106618e-002, 7.252813e-003, 5.829073e-003, 7.735338e-003, 8.419948e-003, 8.582665e-003, -6.340401e-004, -1.300740e-002, -1.664402e-002, -2.666428e-003, 5.264781e-003, -1.872063e-003, -8.374575e-003, -2.037121e-003, -6.187826e-004, -1.454520e-002, -2.227151e-002, -1.804461e-002, -2.897474e-002, -1.970867e-002, -2.078891e-002, 1.780944e-002, 2.848300e-002, -9.128419e-003, 9.227347e-003, 1.079438e-002, -1.335125e-002, 6.152074e-003, -5.688896e-003, -1.148354e-002, -1.122657e-003, -6.737386e-003, -3.174483e-002, -5.816596e-002, -6.979525e-002, -5.925148e-002, -3.791071e-002, -1.477553e-002, 1.407992e-002, 4.424526e-002, 5.874436e-002, 5.961283e-002, 5.455143e-002, 4.123031e-002, 2.368226e-002, 1.923800e-002, 1.862647e-002, 1.490032e-002, 1.314846e-002, 1.054289e-002, 4.896266e-003, 1.531926e-003, -1.152812e-002, -2.753623e-002, -3.684204e-002, -3.118389e-002, -1.865216e-002, -1.233695e-002, -1.546038e-002, -1.158860e-002, -1.117675e-002, -1.531787e-002, -2.627271e-002, -2.085621e-002, -1.606428e-002, -6.782006e-003, -1.349030e-002, 2.315732e-002, 3.044536e-002, -5.348999e-003, 1.407126e-002, 1.418242e-002, -1.023252e-002, 4.171847e-004, -1.766355e-002, -1.424051e-002, -2.550117e-004, -


© ISO/IEC 2004 — All rights reserved

Copyright International Organization for Standardization
Provided by IHS under license with ISO
No reproduction or networking permitted without license from IHS
Not for Resale

5.189083e-003, -3.763035e-002, -6.770133e-002, -7.622773e-002, -6.654006e-002, -5.031293e-002, -2.668807e-002, -1.136634e-003, 2.410066e-002, 3.621751e-002, 3.668114e-002, 3.196850e-002, 2.173858e-002, 1.325416e-002, 1.139470e-002, 1.225673e-002, 8.840178e-003, 8.287347e-003, 7.456788e-003, -3.838184e-003, -1.208061e-002, -2.452448e-002, -4.022042e-002, -5.274611e-002, -5.235625e-002, -3.924442e-002, -2.216779e-002, -1.751770e-002, -1.712576e-002, -1.891500e-002, -2.205942e-002, -2.875034e-002, -2.223997e-002, -1.079611e-002, 1.172927e-003, -8.192639e-003, 2.315893e-002, 2.156530e-002, -2.744114e-003, 1.439885e-002, 1.094611e-002, -9.601513e-003, -5.337792e-003, -2.125619e-002, -1.627175e-002, 2.310871e-003, 1.202223e-003, -3.227798e-002, -6.104146e-002, -7.108877e-002, -6.417648e-002, -5.231498e-002, -3.204574e-002, -1.041949e-002, 8.125447e-003, 1.597254e-002, 1.320582e-002, 5.704163e-003, -2.484369e-003, -3.584653e-003, -6.220655e-003, -4.519752e-003, -6.264288e-003, -9.656129e-003, -1.009759e-002, -1.624834e-002, -2.268762e-002, -3.009118e-002, -4.176824e-002, -5.328232e-002, -5.665983e-002, -5.092965e-002, -3.391738e-002, -1.614188e-002, -1.813564e-002, -1.399382e-002, -2.224112e-002, -2.407674e-002, -1.638171e-002, 4.336156e-003, 9.727792e-003, -1.166723e-003, 1.770085e-002, 1.730026e-002, 1.330767e-003, 1.271858e-002, 5.860444e-003, -1.060480e-002, -5.743221e-003, -1.649705e-002, -1.540639e-002, 9.438260e-003, 9.164060e-003, -2.048363e-002, -4.590169e-002, -5.518254e-002, -5.046646e-002, -3.997521e-002, -2.529160e-002, -1.147926e-002, -6.277786e-003, -7.944830e-003, -1.379137e-002, -1.993380e-002, -2.174605e-002, -1.614320e-002, -1.403174e-002, -1.352519e-002, -1.314364e-002, -1.834934e-002, -1.939361e-002, -1.729418e-002, -1.325123e-002, -1.485084e-002, -2.065761e-002, -2.665985e-002, -3.491830e-002, -4.114582e-002, -3.288516e-002, -1.744559e-002, -1.175728e-002, -4.012804e-003, -1.413216e-002, -1.192310e-002, -4.113762e-003, 9.414745e-003, 9.974436e-003, 8.154956e-003, 9.340042e-003, 9.647636e-003, 2.665396e-003, 8.179882e-003, 2.429681e-003, -1.150001e-002, -2.100484e-004, -6.752613e-003, -1.194234e-002, 1.413088e-002, 1.952078e-002, -3.849637e-004, -1.500247e-002, -2.133666e-002, -1.529052e-002, -6.514918e-003, -4.883660e-003, -6.346725e-003, -1.159964e-002, -2.325967e-002, -3.246921e-002, -3.568691e-002, -3.476024e-002, -2.830804e-002, -2.264060e-002, -1.776846e-002, -7.880975e-003, -1.986344e-003, 4.105300e-003, 1.077652e-002, 1.856278e-002, 2.324777e-002, 2.269256e-002, 1.937970e-002, 8.169063e-003, -1.041293e-002, -1.499745e-002, -1.277363e-002, -4.212414e-003, 7.704622e-003, 1.273607e-003, -1.275193e-003, 8.335472e-003, 1.453633e-002, 4.132624e-003, 1.355846e-002, 5.687170e-004, 3.691780e-003, 2.718396e-003, 3.462452e-003, 4.400036e-003, -9.916076e-003, 4.414488e-003, 2.472001e-003, -8.379539e-003, 1.638955e-002, 3.685957e-002, 2.788381e-002, 1.289765e-002, -6.066829e-005, -4.045119e-003, -1.162407e-003, -1.537830e-003, -1.921236e-003, -9.856099e-003, -2.083962e-002, -3.438069e-002, -4.118815e-002, -3.895075e-002, -3.132802e-002, -2.099007e-002, -8.010976e-003, 1.142141e-002, 2.212469e-002, 2.594951e-002, 2.972416e-002, 3.490176e-002, 4.174606e-002, 5.000229e-002, 5.955972e-002, 6.177936e-002, 4.121972e-002, 1.831013e-002, -7.584188e-005, -7.567920e-004, 1.308298e-002, 1.690079e-002, 9.718849e-003, 1.570627e-002, 1.960669e-002, -1.465501e-003, 6.305275e-003, -4.793056e-003, 1.636434e-003, 1.457865e-003, 1.029954e-003, 9.222359e-003, -4.435060e-003, 8.444540e-003, 1.278049e-002, -5.623437e-003, 1.505667e-002, 3.988288e-002, 3.121899e-002, 1.101556e-002, -1.236478e-002, -2.948465e-002, -3.142427e-002, -2.414178e-002, -1.653809e-002, -1.258741e-002, -1.328170e-002, -2.354241e-002, -3.321318e-002, -3.545178e-002, -2.623351e-002, -8.782409e-003, 9.655470e-003, 2.139146e-002, 1.707519e-002, 3.871359e-003, -1.272067e-002, -1.874555e-002, -1.466697e-002, 4.459421e-003, 3.684380e-002, 6.802281e-002, 7.664786e-002, 5.156733e-002, 2.043259e-002, 6.045711e-003, 1.049648e-002, 2.264092e-002, 1.863497e-002, 2.263917e-002, 2.471773e-002, 6.881341e-003, 4.157814e-003, 1.563904e-003, 3.035345e-003, 1.272319e-003, -7.603081e-004, 1.073849e-002, -2.479634e-003, 1.686773e-002, 1.760120e-002, -4.037708e-003, 3.723211e-003, 1.784106e-002, 1.640639e-002, 1.498598e-002, 8.815739e-003, 3.831863e-003, 4.040825e-003, 1.502284e-002, 2.715637e-002, 2.955559e-002, 2.065481e-002, 1.941281e-003, -1.925052e-002, -3.093382e-002, -2.174594e-002, -9.527898e-004, 1.544302e-002, 2.028817e-002, 1.457238e-002, 3.190714e-003, -4.254822e-003, -4.854970e-003, 3.877601e-003, 1.149515e-002, 2.139879e-002, 3.629820e-002, 5.883521e-002, 6.156932e-002, 3.387645e-002, 9.440570e-003, 4.673382e-003, 1.993206e-002, 1.951439e-002, 2.392733e-002, 2.104395e-002, 1.484554e-002, 1.182475e-002, 2.977445e-003, 5.434968e-003, 1.554427e-002, -1.317799e-003, 1.297940e-002, 8.669337e-004, 2.026853e-002, 1.514290e-002, -5.607298e-003, -7.542646e-003, 1.533698e-003, 1.888979e-002, 2.447939e-002, 1.410061e-002, -7.528402e-003, -2.599182e-002, -2.124626e-002, -2.636075e-003, 1.554584e-002, 2.798997e-002, 1.693255e-002, -1.617484e-002, -4.315102e-002, -3.762735e-002, -1.906664e-002, 5.589950e-003, 1.658137e-002, 5.985846e-003, -3.662091e-003, -1.205041e-002, -7.243539e-003, 3.211090e-003, 1.358832e-002, 1.617816e-002, 1.173270e-002, 1.459855e-002, 2.912248e-002, 3.180536e-002, 8.732991e-003, 4.850694e-004, 1.165970e-002, 1.766652e-002, 1.541943e-002, 1.145427e-002, 7.087714e-003, 1.309891e-002, 1.424655e-002, 8.135110e-003, 1.602598e-002, -2.551609e-003, 7.964436e-003, -1.183490e-003, 1.341944e-002, 1.478391e-002, 4.074896e-003, -4.624585e-003, 1.084213e-002, 3.724939e-002, 3.613300e-002, 1.804643e-002, -5.768446e-003, -2.502491e-002, -2.560644e-002, -1.619636e-002, -5.752296e-003, 6.918948e-003, 1.684840e-002, -1.076352e-002, -4.846247e-002, -5.427532e-002, -3.129443e-002, -4.807930e-003,

© ISO/IEC 2004 — All rights reserved


Copyright International Organization for Standardization
Provided by IHS under license with ISO
No reproduction or networking permitted without license from IHS
Not for Resale

1.129321e-002, 1.335400e-003, -2.366298e-002, -4.819153e-002, -5.599663e-002, -4.517289e-002, -2.434086e-002, 1.072164e-003, 3.425471e-003, -1.570423e-002, -1.827215e-002, 8.366315e-003, 8.742230e-003, -8.327331e-003, 1.270712e-003, 9.872683e-003, 8.326282e-003, 5.700007e-003, 2.466377e-003, 7.954070e-003, 1.519999e-002, 6.916062e-003, 1.288538e-002, -6.743906e-003, 5.031725e-003, 5.362824e-003, 9.446258e-003, 1.451251e-002, 1.677854e-002, 1.963677e-002, 2.922950e-002, 4.829717e-002, 4.698566e-002, 2.579336e-002, 1.235147e-002, 1.602374e-002, 1.616113e-002, 9.497051e-003, 8.601090e-003, 1.652444e-003, 1.198344e-003, -8.854080e-003, -5.040753e-002, -5.843475e-002, -4.329207e-002, -1.395972e-002, 1.116531e-002, 1.448649e-002, -9.133043e-003, -3.621332e-002, -2.824912e-002, -1.763575e-002, -1.570759e-002, -3.636006e-003, 8.003454e-003, -1.175027e-002, -3.194964e-002, -1.112467e-002, 3.751659e-003, -1.334476e-002, -3.927304e-003, 8.322130e-003, 3.862149e-003, -5.526633e-004, 1.456484e-002, 8.813110e-003, 9.871030e-003, -3.189557e-003, -1.328788e-003, -6.084273e-003, 2.998252e-003, 1.323421e-002, 1.363034e-002, 2.043630e-003, 2.238148e-002, 3.473067e-002, 2.323868e-002, 1.495314e-002, -2.605189e-003, -2.240109e-002, -5.241751e-004, 2.914690e-002, 2.209090e-002, -1.757004e-002, -3.187263e-002, -3.606686e-002, -1.672424e-002, -1.672396e-002, -5.462676e-002, -5.840732e-002, -3.174359e-002, -1.569773e-002, -2.277258e-003, 3.432050e-004, -2.251683e-002, -5.870360e-002, -2.015286e-002, 8.881384e-003, -3.767546e-004, -2.177314e-002, -1.034951e-002, -5.718629e-003, -2.373586e-002, -6.629028e-003, 1.165765e-002, -8.339176e-003, 2.181028e-003, 9.097044e-003, 4.176778e-003, -8.359278e-003, 4.078145e-003, 6.726668e-003, -1.267045e-002, -1.345481e-002, -2.471714e-003, 5.156454e-003, 5.320466e-003, 1.330331e-002, 1.257650e-002, -3.293104e-003, 1.982449e-002, 2.118603e-002, -1.020648e-002, -4.713859e-002, -6.064417e-002, -4.924387e-002, -2.522811e-003, 3.049072e-002, 1.520092e-002, -3.886957e-002, -6.853593e-002, -7.128835e-002, -2.383011e-002, -5.635210e-003, -3.740758e-002, -4.224101e-002, -9.396020e-003, 3.802030e-003, -2.061251e-002, -3.919462e-002, -5.237385e-002, -5.920747e-002, -1.205627e-002, 4.999588e-002, 2.733812e-002, -2.360535e-002, -3.442695e-002, -2.323407e-002, -2.515877e-002, 8.163174e-003, 3.777083e-002, 2.266233e-002, 2.166206e-002, 1.146095e-002, 9.698106e-003, -1.284838e-002, 2.543849e-003, 3.799133e-003, -1.233491e-002, -2.136825e-002, -6.737948e-003, 1.284396e-002, 3.894829e-004, -9.289920e-004, 4.756061e-003, -2.042968e-002, -1.874538e-003, 5.227312e-004, -2.780700e-002, -5.071112e-002, -3.569152e-002, 6.508986e-003, 3.889418e-002, 5.370038e-002, 2.766464e-002, -4.396061e-003, -4.520213e-002, -5.184280e-002, -6.033881e-003, 9.278544e-003, -1.614101e-002, -1.765720e-002, 8.390779e-003, 2.017103e-002, -1.474471e-002, -2.191314e-002, -1.154296e-002, -9.209323e-004, 1.938328e-002, 4.252635e-002, 3.309057e-002, 6.520574e-003, -2.242340e-002, -3.212570e-002, -3.072139e-002, 3.007873e-003, 3.149525e-002, 2.322672e-002, 1.277377e-002, -8.556998e-004, 6.847570e-003, -1.351723e-002, 7.168631e-003, 1.355131e-002, -9.431467e-003, -2.228417e-002, -1.163723e-002, 9.828454e-003, -2.978198e-003, -1.204515e-002, -1.124133e-003, -3.195202e-002, -1.637482e-002, -9.369953e-003, -2.702436e-002, -2.497431e-002, 5.583398e-003, 5.301366e-002, 8.656126e-002, 9.454682e-002, 6.941307e-002, 3.185961e-002, -9.888844e-003, -1.684885e-002, 9.503448e-003, 1.559672e-002, -1.211654e-003, -4.120025e-003, 1.379781e-002, 3.243810e-002, -2.467763e-003, -1.041962e-003, 2.997717e-002, 5.375091e-002, 7.201808e-002, 7.717322e-002, 6.528703e-002, 3.780268e-002, -6.376241e-004, -2.031205e-002, -2.917886e-002, -7.215819e-003, 1.244932e-002, 2.657372e-003, -8.108275e-003, -1.458372e-002, 6.089690e-003, -9.342231e-003, 7.298368e-003, 1.493415e-002, -2.916515e-003, -1.416609e-002, -1.974538e-003, 1.522495e-002, -1.243128e-002, -1.866137e-002, -1.988085e-003, -3.551003e-002, -1.748887e-002, -1.254813e-002, -2.549140e-002, -1.322612e-002, 1.563733e-002, 5.208967e-002, 8.289265e-002, 8.588837e-002, 6.273532e-002, 3.460591e-002, 1.910349e-002, 2.255685e-002, 1.689870e-002, 1.710993e-002, 5.490007e-003, 1.170222e-003, 1.450943e-002, 3.063176e-002, 9.336184e-003, 9.002881e-004, 2.445082e-002, 4.817323e-002, 6.521779e-002, 6.751189e-002, 5.560072e-002, 3.254094e-002, 7.199525e-003, -1.735810e-002, -2.191814e-002, -1.291867e-002, -6.505735e-003, -9.074925e-003, -1.255091e-002, -1.830574e-002, 1.002297e-002, -1.089473e-002, 8.436186e-003, 1.209408e-002, -1.766910e-003, -2.196323e-003, 8.432144e-003, 1.486221e-002, -9.286263e-003, -1.126801e-002, 4.363286e-003, -3.141331e-002, -1.828721e-002, -1.292431e-002, -2.566455e-002, -1.782189e-002, 2.069807e-003, 2.590503e-002, 4.927746e-002, 5.329071e-002, 4.253536e-002, 3.455599e-002, 4.039510e-002, 3.280166e-002, 1.897674e-002, 1.293892e-002, 1.573309e-003, -4.093940e-003, 1.041600e-002, 2.805602e-002, 1.615593e-002, -1.103960e-004, 4.319075e-003, 1.992396e-002, 2.796922e-002, 3.009859e-002, 2.292850e-002, 1.329471e-002, -6.753109e-004, -1.487050e-002, -1.783103e-002, -1.443779e-002, -1.879865e-002, -1.255712e-002, -6.540748e-003, -8.318496e-003, 1.264705e-002, -1.023940e-002, 6.060485e-003, -2.075846e-002, -3.420085e-003, 2.644737e-002, 1.664180e-002, 6.626256e-003, -7.280967e-003, -3.388838e-003, 3.349975e-003, -2.758037e-002, -1.340992e-002, -6.736469e-003, -2.444175e-002, -2.584388e-002, -1.273089e-002, -2.480485e-003, 9.587709e-003, 1.625897e-002, 1.793179e-002, 2.600974e-002, 3.108531e-002, 1.971622e-002, 1.052836e-002, 3.737191e-003, -6.567344e-003, -1.234820e-002, 1.383745e-004, 2.057746e-002, 2.031812e-002, 7.415926e-003, -9.853406e-003, -8.222473e-003, -2.604977e-003, 7.839200e-004, -7.385421e-004, -5.265093e-003, -1.275571e-002, -1.167700e-002, -7.747911e-003, -1.078581e-002, -2.421138e-002, -1.149836e-002, 3.918224e-003, -1.167387e-003,


© ISO/IEC 2004 — All rights reserved

--`,,```,,,,````-`-`,,`,,`,`,,`---

Copyright International Organization for Standardization
Provided by IHS under license with ISO
No reproduction or networking permitted without license from IHS
Not for Resale

7.536001e-003, -6.192198e-003, -2.050399e-004, -2.668570e-002, -3.295397e-002, 2.665906e-002, 1.029858e-002, -7.246172e-003, -9.151057e-003, 5.447679e-003, 2.293866e-003, -1.668461e-002, -5.410721e-003, 4.345514e-003, -1.243636e-002, -2.485640e-002, -2.050762e-002, -1.626287e-002, -1.300279e-002, -9.082419e-003, -2.088530e-003, 7.465867e-003, 5.466934e-003, 5.950524e-003, 1.115070e-002, 1.224120e-002, 1.681573e-003, -1.042281e-002, -5.720096e-003, 1.818502e-002, 1.968534e-002, 1.522938e-003, -4.200241e-003, -1.074397e-002, -1.495338e-002, -1.706652e-002, -1.614363e-002, -1.545204e-002, -1.420629e-002, -6.912070e-003, -2.220640e-004, -1.276128e-002, -2.904808e-002, -8.091250e-003, 2.742283e-003, -3.719965e-005, 5.443434e-003, -1.455756e-002, -5.978901e-003, 2.891894e-003, -4.057028e-002, 1.734284e-002, -9.130791e-004, -1.747944e-002, -8.061824e-003, 8.871429e-003, 9.332462e-003, -7.840608e-004, 3.367277e-003, 9.330107e-003, -3.928476e-003, -1.728614e-002, -2.171319e-002, -2.289229e-002, -1.881622e-002, -1.625730e-002, -7.511073e-003, -6.422696e-003, -1.260488e-002, 7.982674e-003, 4.499220e-002, 5.532070e-002, 2.521896e-002, 1.042653e-002, 1.870110e-002, 3.028454e-002, 1.511576e-002, -1.720278e-002, -1.773486e-002, -9.486630e-003, -1.232929e-002, -1.653785e-002, -1.604571e-002, -1.328164e-002, -9.264018e-003, -2.849273e-003, -4.783098e-003, -1.728736e-002, -2.963454e-002, -1.807861e-003, -5.334838e-003, -8.832102e-003, -2.219496e-003, -1.769346e-002, -1.255402e-002, -4.299501e-004, -3.866419e-002, 9.649251e-003, -1.194627e-002, -1.807684e-002, -4.559449e-003, 1.738878e-003, 6.492484e-003, 5.743570e-003, 7.406987e-003, 1.642285e-002, 6.876374e-003, -8.139463e-003, -1.550390e-002, -1.658850e-002, -1.590723e-002, -1.308793e-002, -9.571483e-003, -2.454524e-002, -3.080697e-002, 1.157002e-003, 3.843516e-002, 4.063747e-002, 1.743033e-002, 2.433898e-003, 1.500502e-002, 2.000674e-002, -4.781554e-003, -4.353887e-002, -4.578052e-002, -2.010378e-002, -3.691898e-003, -3.012190e-003, -3.060635e-003, -3.328789e-003, -1.492947e-003, 5.098186e-003, -8.572098e-004, -1.226278e-002, -2.377419e-002, 3.684028e-003, -1.098170e-002, -1.831735e-002, -6.178288e-003, -1.754950e-002, -2.162370e-002, 1.761756e-003, -3.581398e-002, 7.817907e-003, -1.459720e-002, -1.005849e-002, 7.031704e-003, -3.497521e-003, -1.044922e-002, 6.700264e-003, 8.165607e-003, 1.715283e-002, 1.571895e-002, 7.891921e-003, 4.576203e-004, -4.070661e-003, -3.809469e-003, -5.616780e-004, -1.064676e-002, -3.698673e-002, -4.243877e-002, -1.744547e-002, 1.021875e-002, 1.799963e-002, 2.152194e-002, 7.389787e-003, 2.134328e-003, -3.135859e-003, -3.295353e-002, -6.603286e-002, -6.089218e-002, -2.266306e-002, 5.192793e-003, 1.193039e-002, 9.433966e-003, 6.825348e-003, 1.083465e-002, 1.435174e-002, 5.256767e-003, -8.714775e-003, -1.410372e-002, 1.229150e-002, -2.092440e-002, -2.622060e-002, -2.076282e-003, -9.241525e-003, -1.120947e-002, 9.149922e-003, -2.470438e-002, 1.044461e-002, -9.597007e-003, -9.020385e-003, 1.368249e-002, -5.066279e-003, -1.783340e-002, 2.001643e-003, 1.754450e-003, 1.241386e-002, 2.196143e-002, 1.700590e-002, 1.356112e-002, 1.081968e-002, 1.004540e-002, 4.844681e-003, -1.606679e-002, -3.357299e-002, -2.997322e-002, -5.279860e-003, 9.101199e-003, 1.768412e-002, 3.914149e-002, 4.467064e-002, 2.440911e-002, 3.122812e-004, -2.156773e-002, -4.691545e-002, -5.249573e-002, -2.022120e-002, 1.377554e-002, 2.713651e-002, 2.501254e-002, 1.729655e-002, 1.889627e-002, 2.107058e-002, 9.407594e-003, -1.843355e-003, -3.709468e-003, 4.117240e-003, -2.240335e-002, -1.683497e-002, 1.306508e-002, -1.537591e-004, 2.798181e-003, 6.407629e-003, -1.268106e-002, 2.069914e-002, -1.711476e-003, 2.041787e-004, 1.742060e-002, -2.856907e-005, -1.260247e-002, 4.155044e-003, 1.504395e-003, 8.166579e-003, 2.142187e-002, 2.134197e-002, 1.845493e-002, 1.753270e-002, 1.439900e-002, 6.342637e-003, -8.813927e-003, -1.518554e-002, -1.411035e-002, -1.340120e-002, -2.263320e-002, -2.296631e-002, -5.975064e-003, 7.335716e-003, -1.201250e-002, -2.796684e-002, -2.867926e-002, -3.405381e-002, -2.866833e-002, -1.068662e-002, 1.768282e-002, 3.110459e-002, 2.970456e-002, 2.102673e-002, 2.464135e-002, 2.665580e-002, 1.015517e-002, 2.520110e-003, -3.739607e-003, 2.430857e-003, -1.052567e-002, -5.999682e-004, 2.015960e-002, 3.779596e-003, 3.948649e-003, -2.710433e-003, -8.055694e-004, 3.359170e-002, 4.232277e-003, 4.636628e-003, 1.790028e-002, 1.118468e-002, -6.247545e-003, 8.449191e-003, 4.379182e-003, 4.244444e-003, 1.777609e-002, 2.283619e-002, 2.042092e-002, 1.948069e-002, 1.099191e-002, 6.706698e-003, 1.650567e-003, -4.036282e-003, -1.496884e-002, -3.534395e-002, -5.532915e-002, -5.924851e-002, -5.184361e-002, -4.887671e-002, -5.786319e-002, -5.837112e-002, -4.945153e-002, -3.480343e-002, -1.421286e-002, -1.034219e-004, 1.654877e-002, 2.717197e-002, 2.631662e-002, 2.102671e-002, 2.436586e-002, 2.485113e-002, 5.978555e-003, 6.028246e-003, 8.874154e-003, 1.154613e-002, 1.542329e-004, 1.515742e-002, 1.310562e-002, 4.881906e-004, -1.285167e-003, -1.064992e-002, 2.016006e-004, 1.175779e-002, 9.555459e-003, 7.575570e-004, 1.760286e-002, 1.561042e-002, -7.993702e-004, 7.701427e-003, 3.108329e-003, 1.233821e-003, 1.289472e-002, 1.892786e-002, 1.557947e-002, 1.240630e-002, 2.342508e-004, 7.989088e-004, 7.851959e-003, 4.553409e-003, -1.319519e-002, -3.225065e-002, -3.483300e-002, -3.343143e-002, -3.328608e-002, -3.101199e-002, -2.487402e-002, -2.042600e-002, -1.532362e-002, -8.958206e-003, 4.176528e-003, 1.347834e-002, 1.490352e-002, 1.080992e-002, 8.579315e-003, 1.079419e-002, 1.970374e-002, 1.717285e-002, 9.467504e-004, 7.319715e-003, 1.591860e-002, 1.713586e-002, 1.650023e-002, 1.727337e-002, 9.658596e-003, 1.466135e-003, -3.019654e-003, -1.250717e-002, 1.456543e-002, 8.709867e-004, 7.975111e-003, -9.187838e-003, 4.517122e-003, 1.756539e-002, 1.688293e-003, 7.591730e-003, 1.223368e-003, -6.647558e-003, 6.724933e-003, 1.477609e-002,

© ISO/IEC 2004 — All rights reserved


Copyright International Organization for Standardization
Provided by IHS under license with ISO
No reproduction or networking permitted without license from IHS
Not for Resale

1.075511e-002, 1.607728e-003, -1.119221e-002, -5.143238e-003, 1.576155e-002, 1.608613e-002, 8.046764e-004, -1.082497e-002, -1.443142e-002, -1.631060e-002, -1.934256e-002, -1.732936e-002, -2.029572e-003, 1.414878e-002, 2.352711e-002, 2.444247e-002, 2.869900e-002, 2.431299e-002, 7.301983e-003, -1.111892e-002, -1.163891e-002, 1.579260e-003, 1.311829e-002, 1.037261e-002, -5.844667e-004, 1.194762e-003, 1.545364e-002, 1.558923e-002, 1.647298e-002, 1.467391e-002, 8.810810e-003, 8.523452e-003, 4.019054e-003, -1.468294e-002, 8.743058e-003, -6.267774e-003, 1.004266e-003, -1.557843e-002, -1.370500e-002, 3.361545e-004, 2.969751e-003, 1.022781e-002, 2.078329e-003, -1.465260e-002, -7.768054e-004, 1.255081e-002, 7.716872e-003, -4.079939e-003, -1.367445e-002, -8.781210e-003, 1.084837e-002, 1.647474e-002, 1.210330e-002, 8.659793e-003, 3.157267e-003, -5.130336e-003, -1.605570e-002, -1.652206e-002, -3.630398e-003, 8.170419e-003, 2.057052e-002, 2.991857e-002, 3.350826e-002, 1.808847e-002, -9.047972e-003, -2.812472e-002, -2.573314e-002, -6.159158e-003, 5.530856e-003, 3.736642e-003, 1.109726e-003, -2.906230e-003, 4.535026e-003, -2.578680e-003, -1.898513e-003, 1.404477e-003, 8.086278e-003, 1.442529e-002, -1.615476e-002, -1.241135e-002, 2.996359e-003, -1.326910e-002, 4.116264e-003, -9.803887e-003, -1.326720e-002, -1.563339e-002, 6.758222e-004, 9.091338e-003, 3.794169e-003, -1.710602e-002, -9.684947e-003, 7.173562e-003, 9.005278e-003, -2.781387e-003, -9.918401e-003, -4.332765e-003, 1.097800e-002, 1.802496e-002, 1.439052e-002, 7.273581e-003, 6.745852e-003, 5.886821e-003, 7.077719e-005, -3.102296e-003, 2.405537e-003, 1.390646e-002, 3.081530e-002, 3.843855e-002, 2.982112e-002, 5.865108e-003, -2.004780e-002, -3.175492e-002, -2.407349e-002, -3.172719e-003, 6.246917e-003, -2.541434e-003, 3.258323e-003, -1.104132e-003, -5.945282e-003, -2.574266e-002, -1.365051e-002, -1.010449e-002, 5.093170e-003, 1.734367e-002, -1.966207e-002, -1.242609e-002, -5.172753e-003, -2.137364e-002, 1.089869e-002, 7.144634e-005, -1.239244e-002, -1.907447e-002, -5.306067e-003, 2.280217e-003, 5.304288e-003, -1.170274e-002, -1.396444e-002, 2.763007e-003, 1.089561e-002, 1.812500e-003, -8.348017e-003, -5.645765e-003, 8.782217e-003, 1.836148e-002, 1.314083e-002, -1.261693e-003, -1.281644e-002, -2.111402e-002, -2.169796e-002, -2.056933e-002, -1.124729e-002, 4.215032e-003, 3.201810e-002, 4.690798e-002, 3.938712e-002, 1.654934e-002, -4.016834e-003, -1.257221e-002, -7.931720e-003, 5.124512e-003, 5.093221e-003, -2.608712e-003, 5.836297e-003, 8.747335e-003, -6.007036e-003, -2.666710e-002, -2.472294e-002, -9.549825e-003, 1.071920e-002, 1.207540e-002, -1.459958e-002, -8.350826e-003, -4.200325e-003, -2.095801e-002, 1.949125e-002, 1.567537e-002, -1.682972e-003, -1.464133e-002, -7.825274e-003, -7.000577e-003, 2.519661e-003, -1.249937e-003, -5.259037e-003, 6.322713e-003, 1.662641e-002, 3.455502e-003, -1.409125e-002, -1.279131e-002, -2.428238e-003, 2.363245e-003, 2.823988e-004, -3.990000e-003, -4.927145e-003, -7.715624e-003, -1.770685e-003, 4.050628e-003, 1.048678e-002, 1.926521e-002, 2.604821e-002, 2.250841e-002, 1.196994e-002, 8.327542e-004, -1.830851e-003, 2.690727e-003, 1.204914e-002, 1.363134e-002, 3.218769e-003, 2.452857e-003, 7.697778e-003, 1.542027e-002, -8.657684e-005, -1.110893e-002, -2.353507e-002, -1.695701e-003, 1.905876e-002, 1.673906e-002, -5.671590e-003, -3.409156e-003, 1.217177e-003, -1.639630e-002, 2.416067e-002, 2.446504e-002, 8.549834e-003, -1.333484e-002, -1.245967e-002, -1.126246e-002, 2.608159e-003, 8.057785e-003, 7.423682e-003, 1.121513e-002, 1.672079e-002, -3.142263e-003, -1.847750e-002, -1.544460e-002, -1.789149e-003, -1.329052e-003, -3.488913e-003, -2.458244e-003, -1.275922e-004, 3.690317e-003, 7.726184e-003, 1.103977e-002, 1.069208e-002, 1.164895e-002, 1.472507e-002, 1.154267e-002, -4.993932e-003, -1.437249e-002, -6.312095e-003, 1.037893e-002, 2.231518e-002, 1.536074e-002, 8.927831e-003, 3.551714e-003, 1.504159e-003, 7.655435e-003, 6.862960e-003, 1.571978e-004, -1.251276e-002, 2.319317e-003, 1.468430e-002, 1.527154e-002, -3.375152e-003, 2.694581e-003, 2.247636e-003, -1.625963e-002, 2.050582e-002, 1.416405e-002, 5.898027e-003, -1.869543e-002, -1.529189e-002, -1.214600e-002, 5.240772e-003, 1.171118e-002, 1.875739e-002, 1.403046e-002, 1.487931e-002, -4.251838e-003, -1.926713e-002, -1.733338e-002, -4.053432e-003, 2.090026e-004, -5.339168e-003, -7.584599e-003, -8.001582e-003, -7.853575e-003, -8.264663e-003, -7.853576e-003, -5.527351e-003, -6.186358e-003, -4.925964e-003, -8.704326e-003, -1.657262e-002, -1.328621e-002, 1.692255e-004, 1.543316e-002, 2.054503e-002, 1.342942e-002, 1.338364e-002, 6.744815e-003, -2.446882e-003, -1.265176e-002, 4.565786e-003, 1.242135e-003, -7.356635e-003, 8.545923e-004, 7.473231e-003, 1.119147e-002, -4.268320e-003, 8.603548e-003, 6.053971e-003, -1.595493e-002, -2.659488e-002, -7.243532e-003, -1.024866e-002, -1.741268e-002, -8.282634e-003, 1.685775e-004, 1.011035e-002, 5.040757e-003, 1.285643e-002, 1.120268e-002, 6.179514e-003, -3.682412e-003, -1.088741e-002, -9.883355e-003, 1.644029e-004, 4.863072e-003, 3.471584e-003, 4.974787e-003, 7.459454e-003, 4.097300e-003, 3.143284e-003, 3.206501e-004, -3.991289e-003, -4.049852e-003, -4.843133e-003, -8.969752e-003, -1.230164e-002, -1.730193e-003, 9.542724e-003, 1.796452e-002, 1.400601e-002, 9.258337e-003, 1.143949e-002, 5.010280e-003, -9.947285e-003, -1.790599e-002, -5.839851e-003, -1.288093e-002, -1.076575e-002, -8.329025e-003, -6.023753e-003, 8.160934e-003, -4.069634e-003, 5.298040e-003, 2.874310e-004, -2.448807e-002, -3.391903e-002, -1.265106e-002, -1.585937e-002, -7.898594e-003, 6.538609e-003, 1.211972e-002, 3.086658e-003, -8.643616e-003, -2.953208e-003, -1.269306e-003, -3.035907e-003, 4.213817e-003, 8.643931e-003, 4.011361e-003, 6.679089e-003, 9.888125e-003, 1.344409e-002, 1.234140e-002, 1.742770e-002, 1.782240e-002, 1.350659e-002, 5.065211e-003, 2.470370e-003, -1.139413e-003, -2.463064e-003, -2.577979e-003, -


© ISO/IEC 2004 — All rights reserved

Copyright International Organization for Standardization
Provided by IHS under license with ISO
No reproduction or networking permitted without license from IHS
Not for Resale

9.429842e-004, 8.489456e-003, 1.570085e-002, 1.728492e-002, 5.770829e-003, 5.946004e-003, 1.188523e-002, -2.479691e-003, -1.701453e-002, -3.804501e-003, -5.548394e-003, -2.620301e-002, -1.828992e-002, -1.671305e-002, -1.316005e-002, -5.095538e-004, -7.974848e-003, 4.087765e-003, 7.540578e-003, -1.501040e-002, -2.645290e-002, -1.355396e-003, -2.812474e-003, 4.711536e-003, 1.303454e-002, 9.662509e-003, -7.156267e-004, -2.480937e-002, -1.564502e-002, -1.126166e-002, -1.395935e-002, 8.568257e-003, 2.107701e-002, 1.827244e-002, 1.391845e-002, 1.090351e-002, 1.124064e-002, 1.021005e-002, 1.117706e-002, 9.552960e-003, 2.763220e-003, -7.249914e-004, -8.228132e-004, -4.255296e-003, -1.641251e-003, 3.721650e-003, 7.168046e-003, 1.078552e-002, 1.284690e-002, 4.116322e-003, -4.622468e-004, 8.933586e-003, 1.579758e-002, -3.822281e-003, -1.446008e-002, 6.592605e-003, 5.667433e-003, -1.466731e-002, -1.467696e-002, -1.437164e-002, -1.144234e-002, -3.446311e-003, -1.237834e-002, -1.755423e-003, 2.249193e-002, 3.301432e-003, -8.562290e-003, 1.006232e-002, 5.546758e-003, 5.898141e-004, 7.069549e-003, 1.610693e-002, 1.563591e-002, -1.648275e-002, -7.092749e-003, -7.404635e-003, -1.365846e-002, 3.551586e-003, 2.129510e-002, 2.501766e-002, 1.725938e-002, 9.305097e-003, 1.136973e-002, 7.511174e-003, -1.017296e-004, -7.211869e-003, -1.195797e-002, -1.139851e-002, -9.629914e-003, -6.781126e-003, -1.694860e-004, 3.434274e-003, 7.939596e-003, 6.405417e-003, 5.131069e-004, -4.230601e-003, -1.751761e-003, 9.357270e-003, 1.087732e-002, -5.115321e-003, -1.066314e-002, 1.286994e-002, 1.410472e-002, 4.024835e-003, 2.233808e-003, -4.424201e-003, -1.915500e-003, 9.323415e-003, -5.563289e-003, -2.285029e-003, 2.389889e-002, 2.615737e-003, -1.948067e-002, -4.536778e-003, -6.199395e-003, -9.893596e-003, 4.744914e-003, 2.070736e-002, 1.953489e-002, -4.946356e-003, -3.188433e-003, -2.112619e-003, -1.151570e-002, -5.013278e-003, 6.086891e-003, 1.295443e-002, 7.425843e-003, 9.008626e-004, 4.674883e-003, 6.622983e-003, -2.450452e-003, -1.563061e-002, -2.044410e-002, -1.964451e-002, -1.425259e-002, -5.084577e-003, 2.531071e-003, 4.252028e-003, 5.136660e-003, 4.005193e-003, 9.553844e-004, -1.910740e-003, -9.542616e-004, 1.217123e-002, 9.342254e-003, -8.928373e-004, -1.255470e-002, 2.427306e-003, 1.072113e-003, 1.391091e-002, 2.146255e-002, 1.682349e-002, 1.151575e-002, 2.043573e-002, 1.003364e-002, 1.001087e-002, 2.906802e-002, 9.289187e-003, -8.757330e-003, 7.955061e-003, -3.545793e-003, 1.509591e-003, 6.493292e-003, 1.889738e-002, 2.970203e-002, 1.535636e-002, 1.547739e-002, 2.298247e-002, 1.840954e-002, 1.392101e-002, 1.236234e-002, 1.009180e-002, 5.296689e-003, 5.302660e-003, 1.621009e-002, 2.606491e-002, 1.744263e-002, 2.882391e-003, -6.342846e-003, -1.058970e-002, -7.127987e-003, -2.336103e-003, 5.561973e-003, 9.157575e-003, -1.543736e-002, -1.650580e-002, -1.636604e-002, -1.877367e-002, -1.950380e-002, -8.827722e-003, -1.098177e-002, -8.807276e-003, -2.314689e-002, -1.729039e-002, -2.376917e-002, -1.084396e-002, -6.468325e-004, -8.485927e-004, -3.803276e-003, 5.279267e-003, -9.292635e-003, -8.769783e-003, 2.307074e-002, 4.477811e-003, -2.094100e-002, -2.437594e-002, -2.989910e-002, -2.623024e-002, -1.791851e-002, -1.154634e-002, -7.068402e-003, -4.701216e-003, -4.863945e-003, 3.599924e-003, 2.865725e-003, -5.299792e-003, -9.783935e-003, -2.570950e-002, -3.494741e-002, -3.142695e-002, -1.792198e-002, -5.430178e-003, 1.016635e-003, -3.302314e-003, -9.967168e-003, -1.176263e-002, -1.055313e-002, -8.897202e-003, -7.836401e-003, -9.687761e-003, -1.192312e-002, -8.775647e-003, -8.381636e-003, -1.349027e-002, -1.808768e-002, -1.200169e-002, -6.834167e-003, 9.717978e-005, -4.143885e-004, -2.191735e-003, -1.852441e-003, 2.892162e-003, 6.206957e-003, -3.328830e-003, -1.188347e-004, 8.007335e-004, 1.242495e-002, 1.893725e-002, 1.840562e-002, 4.944379e-003, -3.369487e-003, -5.792519e-004, -1.372325e-002, -1.374780e-002, -1.229919e-002, -3.696312e-003, -6.160601e-003, -9.213892e-003, 7.841870e-004, 8.597154e-003, 7.339649e-003, -4.048786e-004, -4.627004e-003, -1.257649e-002, -2.881615e-002, -3.335090e-002, -2.036821e-002, -9.945805e-003, -1.249052e-003, 3.334795e-004, -9.909647e-004, -2.184176e-003, 4.756082e-004, 1.688659e-003, -7.233756e-004, -1.207931e-003, -3.324493e-004, 1.837922e-003, -2.485564e-003, -1.348335e-003, -4.368520e-003, 4.361959e-004, 6.323486e-003, 5.801530e-003, 3.133107e-003, 4.750424e-003, 1.598254e-002, 2.156858e-002, 9.634751e-003, 1.208668e-003, -4.316230e-003, -1.075218e-002, 3.080048e-003, 1.798779e-002, 2.130359e-002, 1.898315e-002, 1.669328e-002, 1.380442e-002, -5.643303e-004, -2.813275e-003, 3.798559e-003, 9.494317e-003, 7.887742e-003, -1.362273e-003, 1.381247e-002, 1.850188e-002, 1.818781e-002, 6.819328e-003, 4.839444e-003, 4.701197e-003, -2.056757e-003, -8.153264e-003, -7.599620e-003, -5.042925e-003, 1.289574e-004, 6.943552e-005, 3.506212e-003, 6.842321e-003, 9.181770e-003, 9.570829e-003, 9.579888e-003, 1.023497e-002, 7.993548e-003, 1.037042e-002, 1.276131e-002, 1.458919e-002, 3.307427e-003, 7.214615e-003, 1.664370e-002, 1.225917e-002, -3.710754e-003, 4.236735e-003, 1.840312e-002, 1.845291e-002, 3.278790e-003, 3.257515e-003, 1.630152e-003, -4.883373e-003, -5.492208e-003, 1.286917e-003, 1.715925e-002, 1.028815e-002, -1.631600e-003, -1.407007e-003, 1.098932e-003, 2.375967e-003, 1.336665e-002, 9.329538e-003, 2.132211e-004, -7.026874e-003, -1.073822e-004, -4.914845e-003, -3.037729e-003, 1.182868e-003, 1.833794e-003, 8.706998e-003, 1.875989e-002, 2.491488e-002, 2.481771e-002, 1.923925e-002, 1.373415e-002, 4.418595e-003, 1.869808e-003, 2.770813e-003, 1.055865e-003, -4.616464e-004, 3.862401e-004, -1.540906e-003, 4.623577e-004, 7.489252e-003, 1.505343e-002, 8.666474e-003, -5.416421e-003, 1.603456e-003, 1.454082e-002, 5.395254e-003, -6.968861e-003, -8.452039e-004, 1.074529e-002, 1.392058e-002, -7.720847e-003, -2.321184e-002, -7.919338e-003, 5.526764e-003,

© ISO/IEC 2004 — All rights reserved


Copyright International Organization for Standardization
Provided by IHS under license with ISO
No reproduction or networking permitted without license from IHS
Not for Resale

5.495565e-003, -4.530433e-003, 2.353540e-002, 1.299500e-002, 1.660635e-002, 3.164432e-002, 3.224155e-002, 3.249275e-002, 3.175928e-002, 1.282095e-002, -1.245235e-002, -1.943224e-002, -1.365779e-002, -1.750013e-002, -1.872492e-002, -1.590162e-002, -1.018194e-002, -4.092668e-003, 4.356323e-003, 1.667125e-002, 2.219124e-002, 2.001948e-002, 1.437135e-002, 2.421151e-003, -4.399844e-003, -7.256840e-003, -8.018609e-003, -6.348728e-003, -4.761654e-003, 3.857652e-004, 9.346530e-003, 1.416506e-002, 1.421021e-002, 8.175769e-004, -6.934513e-003, 2.803223e-003, 8.474105e-003, 1.890754e-003, 1.142228e-002, 1.932192e-002, 1.324164e-002, 1.688925e-002, 3.186933e-003, -1.638637e-002, 1.269145e-003, 1.529977e-002, 2.227948e-002, 2.261614e-002},
{-4.322767e-002, -2.614425e-002, -1.254055e-003, 1.413526e-002, 8.841860e-003, -4.627763e-003, -1.580747e-002, -1.119704e-002, 7.481283e-004, 1.631057e-002, 2.948509e-002, 2.520794e-002, 2.392171e-002, 2.560199e-002, 1.649653e-002, 1.911017e-003, -4.577162e-003, -5.833258e-003, -5.436607e-003, -1.792366e-003, -4.229393e-003, -4.300412e-004, 3.537644e-003, 9.398439e-003, 1.446975e-002, 2.117233e-002, 2.305404e-002, 2.200641e-002, 1.932730e-002, 9.272229e-003, -1.289190e-003, -2.003339e-002, -2.198376e-002, -1.314837e-002, -8.338288e-003, -8.373423e-003, -9.807269e-003, -1.159033e-002, -3.531351e-004, 1.857213e-002, 3.612109e-002, 3.352260e-002, 1.974902e-002, 9.561681e-003, -1.024483e-002, -1.648203e-002, -2.551191e-002, -1.179584e-002, 1.248535e-002, 2.052138e-002, 3.214672e-003, -1.420373e-002, -2.136641e-002, -1.343458e-002, -6.107522e-003, 2.416449e-003, 1.221161e-003, -3.392655e-004, -3.521312e-003, -1.184324e-002, -2.274996e-002, -2.673206e-002, -2.212418e-002, -9.558644e-003, -3.332521e-003, -1.150640e-003, -3.896625e-003, -6.332502e-003, -2.786311e-003, -4.939621e-004, 1.129367e-003, 1.045168e-003, 6.894566e-003, 9.578023e-003, 1.165264e-002, 3.845932e-003, -3.355762e-003, -1.332317e-002, -2.683151e-002, -2.981313e-002, -1.401579e-002, -4.496339e-003, -5.235574e-003, -1.492775e-002, -2.323537e-002, -1.878661e-002, -7.066854e-003, -1.200502e-002, -1.935693e-002, -3.525060e-002, -1.510683e-002, -2.398178e-002, -2.122380e-002, -5.212211e-003, 1.486399e-002, 1.594975e-002, -4.123539e-003, -3.493870e-003, -9.016354e-004, 2.580525e-003, 3.561585e-003, 1.422539e-002, 1.484449e-002, 1.520532e-002, 9.843918e-003, 7.838368e-003, 4.719617e-003, 4.460385e-003, 1.181330e-002, 1.618368e-002, 1.403993e-002, 1.065145e-002, 7.320378e-003, 1.486952e-003, -1.917319e-003, -3.268814e-003, -2.159064e-003, -2.602590e-003, -2.362018e-003, 4.009442e-003, 1.035893e-002, 1.302785e-002, 1.335527e-002, 7.842448e-003, 3.135525e-004, -5.959818e-003, -4.938099e-003, 1.091949e-002, 2.189867e-002, 1.913333e-002, 8.092779e-003, -1.649406e-003, 1.260224e-003, -4.411770e-003, -1.617067e-002, -2.612816e-002, -9.077354e-003, -1.867892e-002, -1.464211e-002, 3.163011e-003, 1.725638e-002, 5.758453e-003, 1.726403e-003, 8.920221e-003, 1.180398e-002, 3.564066e-003, 2.250885e-003, 1.700755e-002, 9.449658e-003, 1.250237e-002, 1.762574e-002, 2.181101e-002, 1.892290e-002, 1.239937e-002, 9.075688e-003, 6.552866e-003, 5.521018e-003, 3.504048e-003, 3.050725e-004, -2.862015e-003, -2.863519e-003, -5.787674e-004, -2.552497e-004, -4.730142e-003, -6.370493e-003, -5.321603e-003, -2.949200e-003, -8.751476e-004, 3.493751e-003, 7.184564e-003, 7.434601e-003, 2.817522e-003, -2.489367e-003, 4.015456e-003, 2.043059e-002, 2.756127e-002, 2.055946e-002, 1.122903e-002, 8.129172e-003, 1.491798e-002, 1.199694e-003, -1.433966e-002, 4.853075e-003, -1.004197e-002, -9.278365e-003, 2.070541e-003, 2.300533e-004, -2.651554e-003, 8.719481e-004, 6.763410e-004, -1.143995e-002, -2.167066e-002, -1.152835e-002, -3.912216e-003, -2.580782e-003, 1.087323e-002, 1.788868e-002, 1.404382e-002, 6.521674e-003, 8.507650e-004, 4.784599e-003, 7.742342e-003, 4.395448e-003, -7.315908e-004, -3.097192e-003, -2.534259e-003, 5.797939e-003, 1.245741e-002, 1.735405e-002, 1.498739e-002, 1.176961e-002, 1.018958e-002, 4.701112e-003, -2.110814e-003, -6.434027e-003, -8.483279e-003, -8.315079e-003, -9.071460e-003, -1.503532e-002, -1.816311e-002, -5.335556e-003, 7.804732e-003, 7.403558e-003, -1.945729e-003, -2.942695e-003, 6.414654e-003, 1.150323e-002, -2.170670e-003, 1.348310e-002, -6.056662e-003, -1.416113e-003, 1.489841e-003, -8.646206e-003, 1.658891e-003, 7.489833e-003, -4.032933e-003, -2.582488e-002, -1.827428e-002, -6.509577e-003, -6.873681e-003, 6.799486e-003, 1.415236e-002, 9.162490e-003, -1.996797e-003, -5.712536e-003, 2.467186e-003, 7.069648e-003, 2.523075e-003, -7.679705e-003, -1.565201e-002, -1.960041e-002, -1.754686e-002, -2.873971e-003, 1.403648e-002, 2.203284e-002, 1.974423e-002, 2.092807e-002, 2.402152e-002, 1.805146e-002, 1.042362e-002, -5.446935e-004, -1.033688e-002, -1.765748e-002, -2.038804e-002, -2.265616e-002, -3.289226e-002, -2.791373e-002, -1.225329e-002, -1.108056e-002, -1.614795e-002, -1.962698e-002, -1.384303e-002, 3.295267e-003, 4.457453e-004, 6.642034e-003, -2.064015e-002, 4.388164e-003, -4.362012e-003, -8.153596e-003, 8.067273e-003, 1.251342e-002, -1.265063e-002, -1.824797e-002, -4.805819e-003, -6.026542e-003, -2.108082e-003, 1.080051e-002, 7.549188e-003, 2.094121e-003, 7.058607e-004, 7.908678e-003, 1.326334e-002, 1.781092e-002, 3.989399e-003, -1.115645e-002, -2.079338e-002, -2.218378e-002, -2.070960e-002, -4.562868e-003, 1.075337e-002, 1.742325e-002, 1.142500e-002, 1.514657e-002, 2.140413e-002, 2.639209e-002, 2.396510e-002, 9.624875e-003, -1.738320e-005, -1.077219e-002, -1.538374e-002, -1.332806e-002, -1.797854e-002, -2.050840e-002, -1.479352e-002, -3.758675e-004, -8.392567e-003, -1.229289e-002, -7.780518e-003, -2.602404e-003, 1.693170e-002, 1.833482e-002, -1.400339e-002, 3.834483e-003, -9.615913e-003, -4.396390e-003, 1.273075e-002, 4.848282e-003, -1.367685e-002, -2.519262e-003, 2.873860e-003, -5.222546e-003, 9.816510e-005, 5.214514e-003, 3.659085e-003, 1.556293e-002, 2.203113e-002,


© ISO/IEC 2004 — All rights reserved
--`,,```,,,,````-`-`,,`,,`,`,,`---

Copyright International Organization for Standardization
Provided by IHS under license with ISO
No reproduction or networking permitted without license from IHS
Not for Resale

2.936156e-002, 3.568992e-002, 3.344093e-002, 1.809340e-002, 2.790321e-003, -4.492500e-003, -8.748572e-003, -1.251413e-002, -7.453886e-003, -8.634955e-004, -2.580442e-003, -6.027204e-003, -5.145841e-004, 4.443031e-003, 9.236353e-003, 7.566167e-003, 7.752081e-003, 8.730199e-004, -5.069154e-003, -8.968168e-003, -6.112988e-003, -5.774835e-003, -1.215802e-003, -8.798816e-003, 4.023182e-004, 9.635126e-003, -4.221131e-003, -2.096525e-003, -5.065315e-004, 2.275506e-002, 2.496950e-002, -5.672949e-003, 3.000976e-003, -1.011520e-002, -9.147600e-006, 1.077053e-002, -1.027800e-003, -4.983230e-003, 1.069492e-002, 5.507781e-003, -2.720869e-003, -3.983711e-003, 3.349769e-005, 1.226206e-002, 2.440988e-002, 3.541913e-002, 4.641036e-002, 5.055180e-002, 4.670093e-002, 3.646496e-002, 2.611121e-002, 1.879885e-002, 9.630057e-003, 8.147144e-005, -2.253524e-003, -5.305808e-003, -1.040449e-002, -1.552704e-002, -1.593266e-002, -1.323751e-002, -8.880230e-003, -7.870249e-003, -4.771519e-003, -4.979539e-003, -1.148154e-002, -1.058863e-002, -5.834938e-003, 1.629596e-003, 1.185935e-002, 1.091622e-002, 4.034010e-003, 1.419496e-002, 8.114971e-003, 1.618949e-003, 4.382684e-003, 2.037282e-002, 2.399651e-002, -1.431339e-003, 3.334777e-003, -2.917574e-003, -4.290422e-004, 2.537663e-003, 7.050071e-004, -1.678447e-004, 1.683912e-002, 6.251925e-003, -5.446049e-003, -1.519975e-002, 1.722869e-003, 1.020196e-002, 1.895550e-002, 3.687235e-002, 4.152810e-002, 4.232417e-002, 4.411199e-002, 4.203770e-002, 3.660566e-002, 3.272021e-002, 2.402302e-002, 1.276102e-002, 1.982880e-003, -4.611441e-003, -1.511678e-002, -1.985443e-002, -2.815200e-002, -2.691220e-002, -2.254849e-002, -2.006942e-002, -1.514593e-002, -8.127505e-003, -1.360223e-002, -2.361970e-002, -1.683209e-002, 3.009401e-004, 1.408498e-002, 2.355416e-002, 1.597823e-002, 1.530313e-002, 1.388376e-002, 1.277362e-002, 7.417536e-003, 1.684804e-002, 6.982052e-004, 2.897763e-003, 1.100292e-002, 5.266569e-003, -9.371029e-003, -5.153566e-004, 1.181436e-003, 2.352816e-003, 9.613209e-003, 4.660107e-003, -9.567616e-003, -1.720340e-002, -2.055956e-003, -2.147948e-003, 8.400198e-003, 1.244621e-002, 8.586765e-003, 3.116368e-003, 9.922111e-003, 2.004072e-002, 2.222806e-002, 2.208311e-002, 1.657109e-002, 1.203452e-002, 5.403099e-003, -1.987994e-003, -1.019513e-002, -1.668779e-002, -2.795780e-002, -2.900014e-002, -3.064410e-002, -3.093981e-002, -3.026107e-002, -2.162223e-002, -1.888893e-002, -2.866763e-002, -3.026644e-002, -1.240273e-002, 1.324020e-002, 2.539325e-002, 1.953791e-002, 1.522456e-002, 1.362344e-002, 1.723544e-002, 1.244465e-002, 1.218404e-002, -9.656067e-003, 6.982419e-005, 1.967641e-002, 5.805788e-003, -7.174657e-003, 5.447177e-003, 1.277269e-003, -1.694490e-003, 3.435051e-004, 6.242147e-003, -1.426130e-002, -1.758308e-002, -9.769184e-003, -1.331681e-002, -1.484173e-002, -2.498623e-002, -3.571411e-002, -4.565974e-002, -3.396546e-002, -2.098817e-002, -1.258973e-002, -9.849334e-003, -6.100829e-003, -8.245945e-007, 6.194696e-003, 3.334646e-003, -2.111921e-003, -5.177106e-003, -1.350632e-002, -2.214366e-002, -3.275372e-002, -4.133996e-002, -4.479995e-002, -4.305852e-002, -2.940734e-002, -2.498356e-002, -2.721466e-002, -2.198439e-002, 3.417906e-003, 2.210767e-002, 2.082686e-002, 1.409189e-002, 9.140955e-003, 9.778708e-003, 1.401982e-002, 1.348139e-002, -1.858933e-002, -8.222296e-003, 2.368409e-002, 3.099699e-003, -3.890889e-003, 2.466943e-003, 3.538619e-003, -8.978217e-003, -1.249712e-003, 3.770605e-003, -1.649749e-002, -1.396040e-002, -1.594575e-002, -2.427456e-002, -3.311113e-002, -5.351480e-002, -6.932517e-002, -8.149416e-002, -7.449397e-002, -5.872754e-002, -5.130806e-002, -4.214450e-002, -2.963472e-002, -1.323620e-002, 9.274439e-004, 5.641767e-003, 8.464199e-003, 7.895990e-003, 4.761559e-003, -6.436079e-003, -2.045372e-002, -3.542231e-002, -4.215052e-002, -4.180852e-002, -2.551073e-002, -1.184879e-002, -1.083300e-002, -1.923520e-002, -7.900871e-003, 1.539214e-002, 1.954119e-002, 1.356663e-002, 6.432725e-003, 1.325630e-003, 1.020812e-002, 2.065615e-002, -2.274002e-002, -1.665519e-002, 2.467753e-002, -1.801855e-003, 6.823203e-003, 6.661062e-003, -1.740892e-003, -1.160281e-002, 6.197107e-003, 4.482314e-003, -9.598890e-003, -9.204098e-003, -1.411968e-002, -2.003861e-002, -3.543106e-002, -5.833790e-002, -7.836598e-002, -8.632248e-002, -8.760243e-002, -7.480406e-002, -6.296850e-002, -5.336797e-002, -3.711079e-002, -1.931344e-002, -2.107852e-003, 1.029489e-002, 1.822864e-002, 1.872266e-002, 2.005697e-002, 1.345432e-002, 5.277546e-003, -7.546487e-003, -1.954363e-002, -2.378364e-002, -1.412676e-002, 2.082447e-003, 9.229936e-003, -6.997346e-003, -6.299629e-003, 1.064463e-002, 1.386738e-002, 1.068882e-002, 3.066255e-004, -9.916478e-003, 3.744661e-003, 2.241939e-002, -1.916643e-002, -2.106640e-002, 2.125510e-002, -1.310617e-002, 6.692812e-003, 3.117591e-003, -9.376977e-003, -1.353804e-004, 1.709781e-002, 1.089579e-002, 2.107470e-003, 1.756673e-004, 5.048915e-004, 1.847077e-003, -1.784824e-002, -4.384940e-002, -6.395893e-002, -7.395459e-002, -7.628261e-002, -6.728266e-002, -5.158506e-002, -3.624221e-002, -2.078003e-002, -5.779479e-004, 1.497983e-002, 2.589342e-002, 2.853092e-002, 3.068587e-002, 3.319564e-002, 3.216638e-002, 3.252948e-002, 2.268921e-002, 6.360903e-003, -2.011440e-003, -3.361073e-004, 1.405856e-002, 2.988429e-002, 1.833215e-002, 1.110504e-003, 8.050385e-003, 6.619209e-003, 5.436862e-003, 3.826041e-003, -1.880936e-002, -6.157500e-003, 2.215636e-002, -9.989807e-003, -2.062455e-002, 1.575864e-002, -2.018257e-002, 4.396985e-003, -4.994231e-003, -9.830899e-003, 8.976190e-003, 2.139913e-002, 1.522028e-002, 1.062059e-002, 1.501814e-002, 2.155658e-002, 3.139494e-002, 1.433755e-002, -1.190038e-002, -2.998877e-002, -4.172406e-002, -4.487747e-002, -3.801866e-002, -2.275230e-002, -1.962536e-003, 1.293706e-002, 2.596247e-002, 3.782866e-002, 4.360396e-002, 4.300805e-002, 4.613312e-002, 5.074163e-002, 5.281195e-002, 5.542045e-002, 4.579206e-002,

© ISO/IEC 2004 — All rights reserved


--`,,```,,,,````-`-`,,`,,`,`,,`---

Copyright International Organization for Standardization
Provided by IHS under license with ISO
No reproduction or networking permitted without license from IHS
Not for Resale

3.304054e-002, 2.159928e-002, 1.489687e-002, 2.345996e-002, 4.077248e-002, 4.036658e-002, 1.381013e-002, 4.429467e-003, -2.134560e-004, -4.107789e-003, 5.000623e-004, -2.435112e-002, -2.224792e-002, 1.886627e-002, -7.877255e-003, -9.652503e-003, 1.067452e-002, -2.365615e-002, 8.569586e-003, -1.343685e-002, -7.858971e-003, 1.122270e-002, 2.124974e-002, 1.283195e-002, 1.217816e-002, 2.816628e-002, 4.130322e-002, 5.529303e-002, 4.075156e-002, 1.112130e-002, -1.129679e-002, -1.996471e-002, -2.395121e-002, -1.663694e-002, 3.588022e-003, 2.419698e-002, 3.491444e-002, 4.346622e-002, 4.879344e-002, 5.237326e-002, 5.095108e-002, 5.269870e-002, 5.273987e-002, 5.033573e-002, 5.057242e-002, 4.351516e-002, 3.407242e-002, 2.459605e-002, 1.874524e-002, 2.211622e-002, 3.694941e-002, 4.362767e-002, 2.308768e-002, 2.876726e-003, -3.850778e-003, -9.311361e-003, -6.353574e-003, -2.371700e-002, -3.286478e-002, 1.335910e-002, -6.691923e-003, 2.962308e-003, 1.675273e-003, -2.293865e-002, 1.140912e-002, -1.739623e-002, -4.057202e-003, 5.933182e-003, 9.828341e-003, 6.001138e-003, 1.720320e-002, 3.607492e-002, 5.508153e-002, 6.685110e-002, 4.493510e-002, 1.251501e-002, -8.211887e-003, -2.111224e-002, -3.157593e-002, -2.583195e-002, -1.622366e-003, 2.675745e-002, 4.428433e-002, 5.133706e-002, 5.409332e-002, 5.462904e-002, 5.148169e-002, 4.736037e-002, 3.391976e-002, 2.393807e-002, 1.524898e-002, 9.123090e-003, 7.796976e-003, 6.794368e-003, 5.440120e-003, 8.752638e-003, 2.466671e-002, 3.522069e-002, 2.259893e-002, 4.205759e-003, -2.110100e-003, -5.246786e-003, -5.687450e-003, -1.731381e-002, -3.535758e-002, 1.729851e-004, -1.076630e-002, 8.709335e-003, -8.442693e-003, -2.027545e-002, 1.459246e-002, -1.446669e-002, 1.677209e-003, -6.945972e-004, -3.359384e-003, -1.075243e-003, 2.048854e-002, 3.489270e-002, 3.945134e-002, 4.197493e-002, 2.635451e-002, 1.298927e-002, -9.748806e-004, -2.136762e-002, -3.325801e-002, -2.998218e-002, -1.226181e-002, 1.965312e-002, 5.021884e-002, 6.486073e-002, 6.734777e-002, 6.311332e-002, 5.589282e-002, 4.442346e-002, 2.476363e-002, 1.207816e-002, 1.437955e-003, -4.848089e-003, -5.097630e-004, 5.979121e-003, 2.789717e-003, -2.133049e-004, 1.759345e-003, 1.862628e-002, 1.836308e-002, 3.393419e-003, -1.514187e-003, -2.922123e-003, -2.364083e-003, -9.946356e-003, -2.549634e-002, -6.506712e-003, -1.291899e-002, 1.197228e-002, -9.142964e-003, -1.969556e-002, 1.668585e-002, -1.035510e-002, 7.073624e-003, -4.147457e-003, -1.856040e-002, -9.746604e-003, 1.934779e-002, 9.208990e-003, -1.807449e-002, -1.394641e-002, 9.705883e-003, 2.215641e-002, 1.661290e-002, 4.699710e-003, 1.944980e-003, 6.054831e-004, -2.969391e-003, 1.236150e-002, 4.350815e-002, 6.782824e-002, 7.783266e-002, 7.631528e-002, 6.242113e-002, 4.172251e-002, 1.711743e-002, 2.770113e-003, -2.522904e-003, -7.906403e-003, -5.103656e-003, -4.684269e-003, -1.276947e-002, -1.366851e-002, -1.513607e-002, -1.392662e-002, -7.514143e-003, -6.753145e-005, 4.425079e-003, -2.960449e-003, 1.019184e-003, 3.506037e-003, -7.928627e-003, 4.548534e-003, -9.301678e-003, 2.107465e-002, -5.279337e-003, -1.745515e-002, -2.415038e-003, -4.889222e-003, 1.272097e-002, -5.800355e-003, -3.443805e-002, -1.618662e-002, 4.734654e-003, -3.734235e-002, -6.309442e-002, -3.147709e-003, 3.900806e-002, 4.091751e-002, 2.828638e-002, 5.916134e-003, -3.372663e-003, -8.344916e-003, -1.298964e-002, -5.386696e-003, 1.892420e-002, 4.585277e-002, 5.543554e-002, 5.330430e-002, 3.768370e-002, 1.573758e-002, -1.378401e-002, -3.474991e-002, -4.196799e-002, -4.568606e-002, -3.379414e-002, -1.885769e-002, -8.265523e-003, -8.062174e-003, -1.315949e-002, -1.821353e-002, -2.395506e-002, -1.620466e-002, 1.487084e-003, -1.080620e-002, -5.817093e-003, 6.849418e-003, 5.741228e-003, 1.449692e-002, -3.438567e-003, 2.569356e-002, -8.091349e-003, -9.530887e-003, -3.991508e-003, 5.740241e-003, 1.009628e-002, -7.988451e-003, -4.508449e-002, -2.065088e-002, -1.372974e-002, -5.500314e-002, -4.063153e-002, 2.929020e-002, 4.261783e-002, 2.018290e-002, 1.034231e-002, 4.699784e-003, -1.817889e-003, -1.762532e-002, -2.494199e-002, -1.904750e-002, 1.124837e-002, 3.377682e-002, 3.292803e-002, 3.228243e-002, 1.888249e-002, -1.036553e-002, -4.308821e-002, -6.007701e-002, -7.018013e-002, -6.879675e-002, -5.769299e-002, -4.240511e-002, -3.354829e-002, -2.389851e-002, -1.326498e-002, -8.231896e-003, -1.259888e-002, -2.757107e-002, -1.195269e-002, -2.060657e-002, -1.649222e-002, 7.591319e-003, 1.454456e-002, 2.373382e-002, -6.720809e-003, 2.095743e-002, -1.764465e-003, -2.795484e-003, -7.429518e-003, 6.006739e-003, 5.755680e-003, -5.335093e-003, -3.727730e-002, -1.380405e-002, -1.469652e-002, -1.976262e-002, -3.884858e-004, 1.123726e-002, -1.433044e-002, -2.682760e-002, -4.183699e-003, 1.606287e-002, 2.874365e-002, 9.787315e-003, -3.470879e-002, -4.345357e-002, -6.128811e-003, 1.642796e-002, 3.413819e-003, 1.553741e-002, 4.342954e-003, -2.176905e-002, -5.975075e-002, -6.992427e-002, -6.124681e-002, -3.330575e-002, -4.400200e-002, -6.400643e-002, -7.248140e-002, -7.804526e-002, -5.752329e-002, -1.895302e-002, 6.278135e-003, -1.977172e-002, -1.919011e-002, -2.282412e-002, -1.757861e-002, 5.803936e-003, 1.003048e-002, 1.380219e-002, -1.760557e-002, -1.507989e-002, -5.511544e-003, -1.774354e-003, -5.104784e-003, 1.012924e-002, 1.700292e-002, -2.060935e-003, -2.511614e-002, -9.160394e-003, 2.132131e-003, 1.933066e-002, 1.779926e-002, -1.922226e-002, -5.403531e-002, -1.176437e-002, 2.908267e-002, 4.991802e-002, 3.019870e-002, 2.046473e-002, -2.944623e-002, -4.708713e-002, -1.114745e-002, -1.084216e-002, -3.942598e-002, -1.604823e-002, 5.970397e-004, -1.811151e-002, -4.867333e-002, -5.447008e-002, -2.052685e-002, 3.229947e-002, 4.830349e-003, -2.508700e-002, -8.773295e-003, -4.454500e-002, -6.916351e-002, -2.999759e-002, 1.772511e-002, 1.078355e-002, 8.627996e-003, -1.998033e-007, -1.308780e-002, 1.743624e-003, 2.122513e-003, 1.998190e-003, -2.819720e-002, -2.024987e-002, -


© ISO/IEC 2004 — All rights reserved

Copyright International Organization for Standardization
Provided by IHS under license with ISO
No reproduction or networking permitted without license from IHS
Not for Resale

6.073839e-003, -2.875455e-003, -2.083505e-003, 8.130866e-003, 1.848000e-002, 1.628465e-003, 1.976714e-003, 1.368147e-002, 2.463396e-002, 3.170760e-002, 1.695208e-002, -3.824662e-002, -3.250841e-002, 1.819609e-002, 1.469821e-002, -9.189987e-003, -3.003706e-002, -5.284415e-002, -7.798225e-002, -6.589257e-002, -3.733928e-003, -1.103026e-002, -4.303184e-002, -1.861808e-002, 4.457418e-003, -1.177449e-002, -2.801926e-002, -4.638204e-002, -4.329286e-002, -5.921937e-003, -1.887701e-002, -4.699254e-002, 5.730735e-003, 1.530821e-002, -1.661730e-002, -4.823493e-003, 3.074129e-002, 4.037681e-002, 3.578584e-002, 2.090649e-002, -6.390873e-003, 1.063945e-002, 1.165938e-002, 5.635475e-003, -2.537190e-002, -1.346750e-002, -1.467866e-002, -2.547539e-003, -5.707891e-003, 1.948954e-003, 1.762050e-002, 2.825454e-003, 2.510762e-002, 2.425633e-002, 1.249923e-002, 9.349421e-003, -3.844839e-003, -1.798389e-002, 1.075641e-002, 3.383991e-002, 1.878071e-002, 4.658875e-003, -1.555751e-002, -4.917202e-002, -6.458067e-002, -4.555031e-002, 3.967303e-003, -2.832014e-003, -4.337914e-002, -2.305426e-002, 2.844938e-003, -3.412180e-003, -9.562041e-003, -1.668209e-003, -8.064381e-003, -1.758359e-002, -1.069767e-002, -2.050023e-002, -1.057914e-002, 1.755853e-002, 1.782136e-002, 6.692683e-003, 1.756351e-002, 8.532076e-003, 9.820481e-003, 1.184898e-002, -1.811506e-002, 6.942917e-003, 1.376330e-002, 9.738149e-003, -1.690589e-002, -1.330421e-002, -1.884835e-002, 3.240783e-003, -6.015037e-003, -6.084852e-003, 6.716065e-003, -4.493930e-003, 2.897810e-002, 2.259790e-002, -8.361276e-003, -2.221972e-002, -2.401054e-002, -1.559751e-002, 1.608018e-002, 4.183297e-002, 4.582614e-002, 3.983762e-002, 2.025446e-002, -3.442714e-003, -2.560074e-002, -1.330664e-002, 1.390210e-002, -1.107514e-002, -4.763051e-002, -2.669877e-002, -5.816257e-003, 2.172668e-003, -4.684212e-003, 2.542314e-002, 4.122240e-002, 3.344434e-002, 2.293221e-002, 8.949779e-003, 5.665364e-003, 8.444066e-003, 5.015789e-003, -8.600292e-003, -8.602908e-003, -2.034468e-002, -3.629287e-003, -2.969858e-003, -3.747867e-002, 2.475473e-003, 1.553846e-002, 1.130450e-002, -5.103962e-003, -5.871340e-003, -2.144346e-002, 9.733107e-003, 3.478724e-003, 7.992270e-003, 3.495958e-003, -1.417283e-002, 2.702135e-002, 1.924422e-002, -1.189480e-002, -3.677547e-002, -4.068080e-002, -2.276253e-002, 7.035939e-003, 3.037125e-002, 4.432027e-002, 4.612318e-002, 3.194398e-002, 1.154848e-002, -1.450010e-003, 6.065285e-003, 6.158698e-003, -3.224801e-002, -5.248934e-002, -2.964949e-002, -1.957307e-002, -1.017477e-002, -1.520673e-002, 1.354056e-002, 4.395882e-002, 5.450224e-002, 4.501424e-002, 2.632213e-002, 1.271594e-002, 3.318573e-003, -4.292096e-004, -1.687526e-002, -3.053067e-002, -3.434375e-002, 1.003046e-003, -1.751140e-003, -4.076853e-002, -5.112732e-003, 9.988998e-004, 4.305050e-003, 1.039119e-004, 6.455171e-004, -1.657107e-002, 1.599811e-002, 1.446446e-002, 1.744279e-002, 3.179220e-003, -1.311231e-002, 1.650996e-002, 1.063478e-002, -7.568645e-003, -3.894484e-002, -5.142625e-002, -2.882052e-002, 9.656048e-005, 1.322090e-002, 2.179489e-002, 2.748959e-002, 2.164250e-002, 1.141764e-002, 2.176274e-003, 3.462595e-003, -1.040672e-002, -4.312821e-002, -5.350989e-002, -3.010467e-002, -2.833987e-002, -2.571102e-002, -3.101474e-002, -2.074368e-002, 1.187981e-002, 2.659071e-002, 2.662863e-002, 1.357379e-002, -1.016981e-004, -7.546468e-003, -7.334681e-003, -2.536627e-002, -3.954682e-002, -3.427110e-002, 1.301545e-002, 5.150746e-003, -3.963695e-002, -7.915651e-003, -8.574535e-003, -1.231798e-004, 8.637663e-003, 7.199707e-003, -1.349190e-002, -1.625762e-002, 1.470509e-002, 1.466114e-002, 1.367489e-003, -9.677030e-003, -8.890607e-004, -7.051507e-003, -9.104177e-003, -2.820542e-002, -4.689900e-002, -3.761804e-002, -1.680819e-002, -5.532890e-003, 2.172075e-003, 4.202383e-003, -3.019541e-003, -1.143423e-002, -1.218912e-002, -6.304926e-003, -1.729808e-002, -3.276761e-002, -3.997451e-002, -2.096154e-002, -1.527911e-002, -2.901250e-002, -2.811901e-002, -3.944715e-002, -3.612169e-002, -1.687793e-002, -7.270108e-003, -1.175764e-002, -2.185121e-002, -2.727995e-002, -2.730246e-002, -3.120051e-002, -3.066437e-002, -2.097095e-002, 1.812786e-002, 8.913203e-003, -2.740213e-002, 2.579958e-003, -3.496719e-003, -5.499212e-003, 7.815799e-003, 1.002382e-002, -2.541201e-003, -1.885118e-002, 1.424048e-002, 3.090759e-003, -9.858376e-003, -1.264968e-002, -1.576562e-002, -1.431582e-002, -2.269183e-003, -1.023270e-002, -2.228133e-002, -2.143434e-002, -2.621147e-002, -2.583428e-002, -3.250759e-002, -3.801523e-002, -3.942435e-002, -3.092248e-002, -1.037392e-002, 6.787336e-003, 2.751023e-003, -4.535219e-003, -8.735305e-003, 1.512993e-003, 8.004671e-003, -9.503748e-003, -1.608962e-002, -3.017531e-002, -4.537064e-002, -5.208222e-002, -4.766871e-002, -4.604233e-002, -4.406204e-002, -4.002797e-002, -2.434952e-002, -1.097721e-002, -1.143891e-002, -8.377821e-003, 2.439184e-002, 1.039464e-003, -2.346523e-002, 9.559584e-003, 1.392930e-003, -8.106822e-003, -9.632849e-004, 4.261833e-004, -8.876777e-003, -2.297885e-002, 1.247243e-002, -6.168544e-003, -1.775817e-002, -1.357695e-002, -1.745923e-002, -1.311855e-002, 4.387581e-003, 6.897013e-003, 1.435116e-003, 1.792181e-003, -4.782063e-003, -1.741527e-002, -3.021126e-002, -3.516990e-002, -2.455017e-002, -4.722507e-003, 1.422335e-002, 2.307422e-002, 2.003265e-002, 2.130810e-002, 1.843302e-002, 2.201677e-002, 2.939907e-002, 1.068038e-002, -2.375224e-003, -4.314090e-003, -1.753160e-002, -3.196092e-002, -3.971194e-002, -4.089457e-002, -3.365318e-002, -1.903267e-002, 3.357643e-003, 1.053851e-002, -1.377222e-003, -4.686835e-004, 2.351580e-002, 2.405706e-003, -1.742379e-002, 1.154247e-002, -2.517552e-003, -1.087777e-002, -9.754607e-003, -8.493422e-003, -1.120445e-002, -2.751870e-002, 5.748528e-003, -1.593469e-002, -2.188192e-002, -1.165531e-002, -1.073676e-002, -6.768429e-003, 4.800814e-003, 2.033505e-002, 2.153109e-002, 2.194276e-002, 1.662729e-002, 6.129035e-003, -4.620285e-003, -7.040563e-003, -

© ISO/IEC 2004 — All rights reserved


Copyright International Organization for Standardization
Provided by IHS under license with ISO
No reproduction or networking permitted without license from IHS
Not for Resale

2.783949e-003, 1.449107e-002, 2.310093e-002, 2.208355e-002, 2.030625e-002, 2.073956e-002, 1.876606e-002, 1.196379e-002, 1.280538e-002, -7.727000e-003, -8.527327e-003, 5.284427e-003, 1.265665e-002, 1.011095e-002, -7.707799e-003, -1.146848e-002, -1.069597e-003, 1.462643e-002, 2.892929e-002, 2.283447e-002, 9.334891e-004, 8.103121e-003, 2.707239e-002, -2.026497e-003, -8.947872e-003, 1.519726e-002, -8.473823e-003, -1.664126e-002, -1.476597e-003, -2.185352e-002, -4.086349e-003, -3.151948e-002, 8.322179e-004, -1.861874e-002, -2.603121e-002, -6.389778e-003, -5.463154e-003, 2.537662e-003, 3.633744e-003, 2.287201e-002, 2.799139e-002, 3.084781e-002, 3.173869e-002, 2.022600e-002, 7.778048e-003, -5.463878e-004, -1.631697e-003, 7.510262e-003, 1.626926e-002, 1.759186e-002, 2.384855e-002, 1.921273e-002, 7.076168e-003, 2.939622e-003, 5.792247e-003, -7.641199e-003, -1.056499e-002, 3.507741e-003, 2.088491e-002, 2.831101e-002, 1.586482e-002, 5.108352e-003, 1.280895e-002, 2.914584e-002, 3.839216e-002, 2.088225e-002, -8.689063e-005, 9.958123e-003, 2.075848e-002, -1.437120e-002, 2.629920e-003, 1.387838e-002, -1.120777e-002, -1.404328e-002, -1.822024e-003, -2.740317e-002, 1.235815e-002, -3.237295e-002, -2.272081e-003, -1.310141e-002, -2.871714e-002, -1.140379e-003, 8.199918e-003, 6.557579e-003, -2.186055e-003, 1.254814e-002, 2.325669e-002, 2.691335e-002, 2.577078e-002, 1.109168e-002, -5.389467e-003, -1.334620e-002, -1.428958e-002, -8.466298e-003, 4.789224e-003, 1.336225e-002, 1.320058e-002, 1.061787e-002, 1.799019e-002, 3.054496e-002, 2.013330e-002, 3.476328e-003, -8.823105e-003, 2.458470e-003, 7.304822e-003, 1.387032e-002, 1.499224e-002, 7.147928e-003, 1.045672e-002, 2.712407e-002, 3.513694e-002, 1.158684e-002, -5.368789e-003, 7.657023e-003, 1.220032e-002, -1.946761e-002, 1.301995e-002, 7.410991e-003, -1.037101e-002, -8.609630e-003, -5.408299e-003, -2.446755e-002, 3.459952e-002, -1.974238e-002, 9.659109e-004, -3.437079e-003, -2.322512e-002, -2.154443e-003, 2.081434e-002, 1.379928e-002, -6.051577e-003, 2.108535e-003, 1.269268e-002, 1.712440e-002, 1.435450e-002, -2.803422e-003, -1.583718e-002, -1.920297e-002, -1.854679e-002, -1.915778e-002, -1.058814e-002, 4.768701e-003, 1.834389e-002, 2.381325e-002, 4.413961e-002, 5.596869e-002, 4.895777e-002, 3.467419e-002, 2.182269e-002, 1.134921e-002, -6.432123e-003, -8.797328e-003, 1.046651e-003, 2.770266e-003, 9.330605e-003, 2.484186e-002, 3.011139e-002, 6.596785e-003, -5.089706e-003, 1.059026e-002, 1.028083e-002, -6.410618e-003, 2.202762e-002, 6.934581e-003, -4.270315e-003, 4.363182e-003, -3.425641e-004, -7.469651e-003, 4.552897e-002, -9.221968e-003, 2.910466e-003, 1.457825e-002, -1.027286e-002, -4.837499e-003, 1.183541e-002, 8.709700e-003, -1.096948e-002, -6.433196e-003, 2.928045e-003, 8.885691e-003, 8.915721e-003, -8.465811e-003, -1.671962e-002, -1.437142e-002, -1.015822e-002, -1.387517e-002, -1.204402e-002, 5.200186e-003, 2.218531e-002, 4.129406e-002, 5.947241e-002, 6.734426e-002, 6.634054e-002, 5.189816e-002, 2.913727e-002, 1.090316e-002, -1.066643e-002, -2.245614e-002, -1.337256e-002, -1.913253e-003, 1.261488e-002, 2.851751e-002, 2.444544e-002, 1.781660e-003, -4.143273e-003, 1.419240e-002, 3.050275e-004, -1.659214e-003, 1.645222e-002, 3.438533e-003, -3.778383e-003, 1.337842e-002, 8.634930e-003, 1.098900e-002, 4.623324e-002, 1.069908e-002, 4.892016e-003, 2.437890e-002, 9.418705e-003, 2.820291e-003, 9.771654e-003, 1.032264e-003, -1.772995e-002, -1.092968e-002, -4.485164e-003, 1.379866e-003, 4.374640e-003, -6.108479e-003, -1.316837e-002, -3.290362e-003, -7.998431e-004, -5.598250e-003, -6.472133e-003, -3.960287e-004, 4.982728e-003, 1.949424e-002, 3.457806e-002, 3.828907e-002, 4.063364e-002, 3.615633e-002, 2.323375e-002, 7.333501e-003, -1.436112e-002, -2.582874e-002, -2.042037e-002, -1.236683e-003, 1.836257e-002, 3.074306e-002, 2.045910e-002, -2.593730e-004, -2.203538e-003, 1.326130e-002, -1.421943e-003, -4.307360e-003, 1.349351e-002, 6.735532e-003, 6.412632e-003, 7.983190e-003, 1.791845e-002, 1.869636e-002, 2.017580e-002, 1.294872e-002, -1.418006e-003, 2.406494e-002, 2.636713e-002, 1.582918e-002, 1.139879e-002, -3.276810e-003, -2.289933e-002, -1.263846e-002, -8.218341e-003, -1.830181e-003, 2.219817e-003, -6.130161e-004, -6.051003e-003, 7.450230e-003, 9.898828e-003, 6.064877e-003, -5.898575e-004, -7.701248e-004, 8.339110e-004, 4.174188e-003, 1.261855e-002, 1.255269e-002, 2.214703e-002, 2.586110e-002, 2.787350e-002, 2.409664e-002, 8.435150e-003, -7.363016e-003, -9.865453e-003, 7.295343e-003, 2.503210e-002, 3.071548e-002, 1.545955e-002, -1.134313e-003, 6.884042e-004, 6.821417e-003, -1.162884e-002, -8.550424e-003, 2.536870e-003, -2.124061e-004, 1.554392e-003, 3.424825e-003, 2.347473e-002, 2.515660e-002, 9.650584e-003, -1.001563e-003, -1.960166e-002, 9.129015e-003, 3.170934e-002, 3.118663e-002, 2.137333e-002, 2.658906e-003, -1.698266e-002, -1.056766e-002, -2.807190e-003, -1.514948e-003, 2.171055e-003, 6.853206e-003, 6.692219e-003, 1.573699e-002, 1.414044e-002, 5.912648e-003, 2.356484e-003, 8.863369e-003, 1.919810e-002, 2.148395e-002, 2.402256e-002, 1.668180e-002, 1.841489e-002, 1.372337e-002, 4.390886e-003, 4.688698e-003, -1.551931e-003, -2.295225e-004, 1.052422e-002, 2.105725e-002, 2.824700e-002, 2.607659e-002, 8.342997e-003, -2.645405e-004, 9.304844e-003, 4.221079e-003, -6.626092e-003, -5.350032e-003, -4.049768e-003, -1.399754e-003, -3.568592e-003, -2.214903e-003, 2.401835e-002, 1.901015e-002, -1.702265e-004, -1.259483e-002, -3.309451e-002, -1.801156e-002, 1.483144e-002, 2.996148e-002, 2.222097e-002, 1.375272e-002, -5.655882e-003, 2.070510e-003, 7.926913e-003, 3.697716e-003, 5.886809e-003, 1.593648e-002, 1.950888e-002, 1.902591e-002, 5.831197e-003, -1.143257e-002, -1.332997e-002, -8.516341e-004, 9.505277e-003, 1.532288e-002, 1.951197e-002, 1.052295e-002, 6.104765e-003, -6.211684e-003, -1.757571e-002, -2.685760e-002, -2.795111e-002, -2.678384e-003, 2.690218e-002, 3.304169e-002,


© ISO/IEC 2004 — All rights reserved

Copyright International Organization for Standardization
Provided by IHS under license with ISO
No reproduction or networking permitted without license from IHS
Not for Resale

2.702771e-002, 1.415715e-002, -1.855404e-004, 3.907974e-003, 1.550652e-002, -1.650354e-004, 7.854496e-003, 3.484509e-003, 4.270073e-003, -4.310611e-003, -1.397160e-002, -4.897060e-003, 1.941637e-002, 1.769808e-002, -1.002841e-002, -1.778508e-002, -3.601139e-002, -2.874178e-002, -9.963540e-003, 1.347051e-002, 1.627856e-002, 1.385893e-002, 3.181903e-003, 8.062834e-003, 2.173320e-002, 1.354534e-002, 8.429347e-003, 1.524146e-002, 1.806477e-002, 1.116472e-002, 1.521384e-003, -1.710367e-003, -5.389557e-003, -3.481357e-003, 3.469844e-003, 5.077348e-003, 9.946302e-003, 9.966454e-003, 1.089355e-002, -2.143521e-003, -1.136512e-002, -1.701254e-002, -1.312887e-002, 1.225650e-002, 3.718011e-002, 3.321973e-002, 1.934414e-002, 4.277953e-003, -1.013076e-003, 6.932438e-003, 8.554612e-003, 2.487641e-003, 1.843466e-002, 1.419063e-002, 1.133551e-002, -1.016687e-002, -2.248061e-002, 2.105996e-003, 1.819953e-002, 1.850958e-002, -8.464229e-003, -1.316475e-002, -2.182845e-002, -1.847510e-002, -1.529200e-002, 1.402646e-003, 6.374479e-003, 9.493267e-003, 6.524445e-003, 6.121511e-003, 2.520198e-002, 2.051092e-002, 1.275654e-002, 1.246273e-002, 1.569720e-002, 1.388674e-002, 1.424101e-002, 1.045001e-002, 4.753401e-003, -7.381282e-004, -5.370474e-003, -1.451801e-002, -1.409162e-002, -1.126157e-002, -8.496911e-003, -8.981476e-003, -6.505628e-003, -4.649097e-003, 2.662809e-003, 1.514201e-002, 2.631078e-002, 2.354425e-002, 1.114108e-002, 9.269255e-004, 6.463269e-003, 9.663316e-003, -7.385991e-003, 7.928346e-004, 1.796892e-002, 1.838568e-002, 1.817640e-002, -1.176970e-002, -2.418660e-002, 2.203612e-003, 1.601851e-002, 2.005856e-002, 8.132842e-004, -4.537951e-003, -6.205508e-003, 1.902057e-003, -4.880443e-003, -9.879749e-003, 3.720229e-003, 4.564497e-003, 9.725268e-003, 5.100444e-003, 4.216678e-003, 1.713795e-002, 1.356159e-002, 6.376249e-003, 1.364318e-002, 2.225404e-002, 2.050517e-002, 1.180887e-002, 3.324955e-004, -6.800295e-003, -1.494272e-002, -2.365751e-002, -2.224586e-002, -2.289412e-002, -2.146050e-002, -1.394563e-002, -4.957168e-003, 7.442361e-004, 7.618646e-003, 1.091063e-002, 1.106183e-002, 9.739753e-003, 4.941974e-003, 3.081364e-003, 1.184189e-002, 9.031623e-005, -1.425112e-002, -4.213103e-003, 4.525035e-003, 1.052728e-002, 1.031065e-002, -1.356845e-002, -2.570493e-002, -4.494158e-004, 7.541639e-003, 1.235217e-002, 6.862314e-004, 1.754062e-003, 8.885785e-003, 1.831207e-002, 9.440310e-003, -9.726674e-003, -1.091679e-002, -5.084577e-004, -2.520603e-003, -3.579915e-003, -1.278322e-002, 6.488065e-004, 1.203247e-002, 4.804482e-003, 1.137067e-002, 2.017766e-002, 1.360683e-002, 4.066727e-003, -3.818290e-003, -1.301310e-002, -2.072119e-002, -2.462362e-002, -2.426355e-002, -2.582850e-002, -1.977758e-002, -7.895974e-003, -2.193765e-003, 1.856633e-003, 2.339654e-003, -6.409932e-004, -3.359411e-003, -2.041999e-003, 3.396382e-003, 9.879261e-003, 1.352333e-002, -8.920501e-003, -9.689078e-004, 6.025580e-004, -2.370815e-003, 1.196216e-002, 1.493558e-002, 7.789762e-004, -1.135213e-002, -9.044438e-003, -9.510004e-003, -3.176796e-003, -2.166280e-003, 6.366819e-003, 2.969270e-002, 2.211748e-002, 9.293306e-003, -1.101526e-002, -2.368597e-002, -8.148640e-003, -8.633368e-003, -4.936778e-003, -1.248414e-002, -1.332869e-002, 5.363727e-003, 1.828383e-003, 9.579017e-003, 1.961274e-002, 1.069566e-002, -5.019847e-003, -1.178738e-002, -1.700782e-002, -1.858647e-002, -1.954952e-002, -1.693598e-002, -1.887103e-002, -1.748997e-002, -1.204517e-002, -9.742615e-003, -1.013721e-002, -1.194701e-002, -1.206121e-002, -1.180136e-002, -4.573472e-003, 6.492477e-003, 8.574397e-003, 6.550733e-004, -3.844387e-003, 1.347758e-002, 1.144166e-003, -4.066948e-003, 1.777061e-002, 2.026484e-002, 1.321541e-002, 2.244553e-003, -5.248681e-003, -1.873867e-002, -1.414211e-002, -6.544773e-003, 3.045284e-003, 1.670612e-002, 3.199075e-003, 1.413075e-003, -7.133452e-003, -1.719200e-002, 3.695607e-003, -2.030890e-003, -5.895684e-003, 1.826322e-003, -1.011799e-002, -1.659788e-003, -3.763976e-003, 4.312727e-003, 1.583224e-002, 1.367413e-002, -3.574284e-003, -1.406173e-002, -1.803364e-002, -1.478970e-002, -1.292433e-002, -1.048137e-002, -1.052472e-002, -1.509587e-002, -1.534914e-002, -1.810935e-002, -2.151674e-002, -2.118400e-002, -1.413621e-002, -6.214575e-003, 2.444015e-003, 8.457934e-003, -3.145837e-003, -6.795955e-003, 1.325671e-002, 2.181665e-002, 5.463537e-003, 7.209519e-003, 1.219626e-002, 7.812101e-003, 1.113764e-002, 7.174014e-003, 5.683525e-003, -1.603195e-002, -1.111043e-002, -9.799778e-003, -8.664606e-003, 2.041650e-004, -7.942681e-003, 8.767127e-004, -1.473446e-003, -4.531607e-003, 1.329301e-002, 5.921871e-003, -6.093881e-003, 7.333282e-003, -2.858797e-003, -8.688971e-003, -1.327851e-002, -1.009059e-002, 6.797948e-003, 8.550387e-003, -1.306863e-004, -1.119686e-002, -1.523513e-002, -1.162960e-002, -5.978691e-003, -2.961609e-003, -6.000645e-004, -6.734292e-003, -1.433956e-002, -2.371113e-002, -2.873416e-002, -2.496735e-002, -1.634414e-002, -2.355068e-003, 7.270877e-003, 6.085029e-003, -1.282762e-002, -6.930230e-003, 1.330549e-002, 1.939622e-002, 7.680516e-003, 1.589300e-002, 2.701361e-003, -9.260589e-003, -2.502523e-003, 3.991222e-003, 1.046079e-002, -5.342558e-003, -5.476939e-003, -6.105761e-003, -2.993667e-003, 2.595571e-003, -7.479075e-003, 7.032315e-004, -1.777069e-003, -8.851186e-003, 1.457929e-002, 1.015698e-002, -1.731773e-002, -4.441756e-004, -4.263825e-003, -1.671319e-002, -2.046245e-002, -1.758872e-002, -3.263545e-003, -1.256629e-003, -8.189428e-003, -1.244684e-002, -1.337686e-002, -1.284865e-002, -1.010072e-002, -5.963682e-003, -6.293559e-003, -1.212631e-002, -2.266463e-002, -2.785166e-002, -3.009641e-002, -2.524593e-002, -1.811628e-002, -6.866328e-003, 8.196385e-003, -3.751883e-003, -2.040509e-002, -1.444442e-002, 4.268612e-003, 2.121858e-003, 7.227272e-005, 1.739288e-002, 2.881175e-003, -1.366085e-002, -1.358350e-002, 1.637264e-003, 1.332794e-002, 4.097628e-003, 7.641306e-003, 1.528651e-002, 1.520642e-002,

© ISO/IEC 2004 — All rights reserved


Copyright International Organization for Standardization
Provided by IHS under license with ISO
No reproduction or networking permitted without license from IHS
Not for Resale

1.921139e-002, 8.805577e-003, 1.145167e-002, 7.527718e-003, 2.106042e-003, 2.190200e-002, 1.248225e-002, -1.483041e-002, 6.494204e-003, 2.120134e-002, 1.922615e-003, 8.184033e-004, 5.407365e-003, 1.707844e-002, 1.387198e-002, 4.005390e-003, 1.846090e-004, 2.162561e-003, 3.857625e-004, 9.071967e-004, -2.236884e-003, -6.138451e-003, -1.010888e-002, -1.789013e-002, -1.829608e-002, -1.803338e-002, -1.233735e-002, -1.831445e-003, 9.322515e-003, 1.434437e-002, -8.014428e-003, -2.144982e-002, -8.431237e-003, 1.764991e-003, -3.065071e-003, -7.305434e-003, 1.338415e-002, 1.157049e-002, 4.855091e-003, -1.238833e-002, 5.122767e-004, 1.430228e-002, 9.595024e-003, 1.777425e-002, 5.419049e-003, 2.716674e-003, 6.260897e-003, -3.055535e-003, -2.361065e-003, -7.593325e-003, -8.117471e-003, 2.378348e-003, 5.034558e-003, -2.087310e-002, 2.629565e-003, 1.812787e-002, 1.221876e-003, 1.057649e-003, 5.314521e-003, 7.447236e-003, 2.854345e-003, -2.505634e-004, -7.281504e-003, -6.381312e-003, -1.360660e-002, -1.407839e-002, -1.516080e-002, -2.203632e-002, -2.900627e-002, -2.948439e-002, -2.762518e-002, -1.872473e-002, -5.179538e-003, 6.529631e-003, 1.547571e-002, 6.533591e-003, -6.827795e-003, -1.154548e-002, -3.312731e-003, -3.012477e-003, -5.572567e-003, -1.176321e-002, -3.850510e-003, 5.308152e-003, 7.401326e-003, -1.221908e-002, -1.770466e-002, -4.349305e-003, -9.233608e-003, 6.443468e-003, -5.923349e-003, -8.421597e-003, 5.312971e-003, 6.688461e-003, 1.340995e-002, 7.364593e-003, 9.890410e-003, 1.858525e-002, 2.092491e-002, -3.990755e-003, 1.157637e-002, 1.900434e-002, 9.014339e-003, 3.514946e-003, 2.151094e-003, 2.263673e-003, -6.397782e-003, -7.419602e-003, -5.823344e-003, -7.174464e-003, -1.051488e-002, -1.368953e-002, -1.886812e-002, -2.419874e-002, -2.495331e-002, -2.312110e-002, -2.087598e-002, -1.620321e-002, -3.623830e-003, 3.787613e-003, 1.173869e-002, 4.097591e-003, -6.036062e-004, 2.175699e-003, 2.149240e-003, -1.002836e-002, 2.341826e-003, 2.577510e-003, -1.045581e-002, -3.743668e-003, 3.039023e-003, -1.089465e-002, -1.550117e-002, -1.849028e-003, -5.255757e-003, 1.344910e-002, -1.083604e-002, -8.463080e-003, 5.578067e-003, 2.661749e-003, 1.210209e-003, -6.196807e-003, -2.932490e-003, 3.546628e-003, 8.398173e-003, -7.247143e-003, -4.732773e-003, 2.274158e-003, 3.863405e-003, 7.312379e-003, 5.194155e-003, -1.359622e-003, -1.020063e-002, -1.534301e-002, -9.691272e-003, -7.191893e-003, -5.636345e-003, -6.224320e-003, -8.992909e-003, -1.101710e-002, -1.275641e-002, -1.279544e-002, -1.226540e-002, -4.702263e-003, 3.376894e-003, 7.836185e-003, 1.083008e-002, 4.632343e-003, 4.405073e-003, 1.038558e-002, -3.403967e-004, -1.125244e-002, 6.566148e-003, 1.360440e-002, -1.129784e-002, -1.282854e-002, 3.840088e-003, -2.018501e-003, -9.070039e-003, 8.305046e-004, -7.415669e-003, 1.236829e-002, -2.481715e-005, -1.952774e-003, 1.717483e-003, -1.638004e-002, -1.535724e-002, -1.692366e-002, -1.770435e-002, -6.784600e-003, 2.227661e-003, -1.194938e-002, -1.211355e-002, -1.242039e-002, -9.821189e-003, 8.080162e-005, -8.867189e-004, -8.896163e-003, -1.945655e-002, -2.483087e-002, -1.856786e-002, -1.268569e-002, -8.317385e-003, -1.551695e-003, 1.646385e-003, 1.101283e-003, -1.110120e-003, -2.865115e-003, -8.344436e-003, -6.373782e-003, -6.558085e-003, -7.589509e-003, -6.934189e-003, -1.099840e-002, -4.246945e-003, 1.248438e-004, -1.176548e-002, -1.896676e-002, 9.022054e-004, -1.697178e-003, -1.736747e-002, -1.576220e-002, 5.199759e-003, 7.948187e-003, -2.167454e-003, -3.915937e-003, -1.118990e-002, 7.046494e-003, 2.187834e-003, -1.072142e-002, -9.573408e-003, -7.472632e-003, -4.580110e-003, -4.584370e-003, 4.598072e-005, 3.327139e-003, 8.732586e-003, -8.085926e-003, -9.385710e-003, -7.720734e-003, -8.611123e-003, 3.230796e-003, 1.186969e-002, 2.392820e-003, -5.292786e-003, -6.937000e-003, -7.446751e-003, -5.299888e-003, -1.334609e-003, 7.234041e-003, 1.093292e-002, 1.195264e-002, 8.341370e-003, 1.146133e-003, -5.407039e-003, -1.027015e-002, -1.154916e-002, -1.597581e-002, -1.017785e-002, -9.498780e-003, 2.056738e-003, 6.527903e-003, -8.111244e-003, 2.275658e-004, 1.685406e-002, -2.700216e-003, -1.158377e-002, 1.753978e-003, 3.287473e-002, 3.211457e-002, 2.120766e-002, 1.358611e-002, -5.580745e-004, 1.737190e-002, -9.230844e-003, -1.335169e-002, -9.609783e-003, -1.371566e-005, 1.510394e-003, 1.501600e-003, -5.310043e-003, -8.279794e-003, -7.776764e-003, -8.752967e-003, -1.775774e-003, -1.629236e-003, -1.085465e-002, 6.697081e-005, 1.221461e-002, 7.157676e-003, 1.688788e-003, 3.800273e-003, 7.581728e-003, 1.333780e-002, 1.959733e-002, 1.999651e-002, 2.265809e-002, 2.172368e-002, 1.790696e-002, 9.852255e-003, 1.086386e-003, -4.273398e-003, -1.065987e-002, -1.026221e-002, -4.464006e-003, 2.144183e-003, 1.964693e-002, 5.380216e-003, -2.564700e-003, 6.300484e-003, 9.055756e-003, -1.134147e-002, -2.771358e-002, -9.101440e-003, 2.199625e-002, 1.329904e-002, -7.380487e-003, -2.167857e-002, -3.288942e-002, -1.211191e-002},
{-1.336732e-003, -1.226772e-002, -2.191250e-002, -2.469552e-002, -1.258988e-002, -9.560671e-003, -1.443189e-002, -1.132366e-002, 7.501533e-003, 1.457439e-002, 1.114043e-002, 1.089751e-002, 1.606380e-002, 1.608505e-002, 1.452374e-002, 5.921373e-003, 5.149347e-003, 7.936323e-003, 7.947834e-003, 3.202091e-003, -3.500261e-003, -5.001913e-003, -5.332693e-003, -5.218904e-003, -1.486064e-003, 5.672443e-003, 8.925694e-003, 8.497211e-003, 8.470106e-003, 1.483409e-003, -6.764514e-003, -1.552379e-002, -9.811613e-003, -6.852751e-003, -1.102453e-002, -1.670026e-002, -1.278773e-002, -1.227779e-002, -2.340168e-002, -2.499692e-002, -2.137628e-002, -2.187758e-002, -2.804404e-002, -1.886428e-002, -1.674907e-002, -3.837082e-003, 6.257791e-003, -1.445794e-002, -2.189564e-002, -1.444509e-002, -3.861108e-003, -1.670799e-002, -2.852935e-002, -2.159552e-002, -9.429396e-003, -1.369240e-002, -1.472650e-002, 3.170247e-003, 2.079655e-002, 2.039931e-002, 1.175359e-002, 1.385674e-002, 2.715599e-002, 3.393107e-002,


© ISO/IEC 2004 — All rights reserved

Copyright International Organization for Standardization
Provided by IHS under license with ISO
No reproduction or networking permitted without license from IHS
Not for Resale

3.082496e-002, 2.038310e-002, 5.887500e-003, -8.485122e-003, -2.144717e-002, -2.584451e-002, -2.638966e-002, -2.322804e-002, -1.204241e-002, 1.768281e-003, 1.576354e-002, 2.229702e-002, 1.339235e-002, 2.785615e-003, 1.448665e-003, 1.552048e-002, 2.554268e-002, 1.707407e-002, 9.824476e-003, 1.046345e-002, 1.768580e-003, 3.808284e-003, 6.507898e-003, 9.220910e-004, -9.791652e-003, -1.714066e-002, -3.162561e-003, 7.470887e-003, 7.446380e-003, -1.189275e-002, -9.767772e-003, -1.620289e-003, -4.201491e-003, -2.784497e-002, -2.972749e-002, -1.225120e-002, -5.609628e-003, -1.763947e-002, -8.659686e-003, 9.124920e-003, 6.634154e-003, -3.093015e-003, -4.206603e-003, 1.219897e-002, 2.481713e-002, 2.639199e-002, 1.980701e-002, 7.203437e-003, -4.212166e-003, -1.342140e-002, -2.397478e-002, -2.921621e-002, -3.111514e-002, -2.705407e-002, -2.101681e-002, -1.431394e-002, -8.096498e-003, 2.445305e-003, 1.060102e-002, 1.304290e-002, 4.338679e-003, -2.926673e-003, 7.743975e-003, 1.905468e-002, 6.376215e-003, -3.439430e-003, -3.730302e-003, 6.041668e-004, 5.570677e-003, 7.055996e-003, 2.412337e-003, -6.224943e-003, 5.543715e-003, 1.299977e-002, 8.146273e-003, -8.091215e-003, -8.047688e-004, 3.599437e-003, -8.923131e-003, -3.481485e-002, -2.839661e-002, -9.859223e-003, -1.813337e-002, -2.512764e-002, -1.013790e-002, -7.424998e-003, -1.609022e-002, -2.152558e-002, -1.039343e-002, 1.022099e-003, 7.740329e-003, 7.048201e-003, 4.154570e-003, 5.456543e-004, -1.330354e-003, -2.068550e-003, -7.828193e-003, -1.490400e-002, -1.809822e-002, -1.636988e-002, -9.629219e-003, -1.950217e-004, 3.724422e-003, -1.216842e-003, 1.920074e-003, 7.545819e-003, 8.744741e-003, -1.525956e-003, -1.070805e-002, 9.565110e-004, 3.772650e-003, -1.058415e-002, -1.188757e-002, -4.177688e-003, 1.135057e-003, -2.215544e-003, 3.258914e-003, -2.273013e-003, -6.070127e-004, 1.174698e-002, 1.595909e-002, 1.457101e-004, 1.206659e-002, 1.488416e-002, -5.120019e-003, -2.036944e-002, -3.571093e-003, 6.537211e-004, -2.000869e-002, -1.846648e-002, -1.333938e-002, -2.061780e-002, -2.604871e-002, -2.314172e-002, -1.677686e-002, -6.583053e-003, -1.048655e-002, -1.107518e-002, -5.963978e-003, -2.930297e-003, 1.284919e-003, 5.487180e-003, 4.456218e-003, -8.379423e-004, -5.685552e-003, -6.750036e-003, -9.533637e-003, -1.755538e-003, 7.813917e-003, 7.386720e-003, 2.021443e-003, 6.974610e-004, 9.275081e-004, -3.501818e-003, -1.238411e-002, -1.073310e-002, -8.525118e-003, -1.482326e-002, -2.247854e-002, -1.587536e-002, -1.350284e-002, -2.115996e-002, -2.471090e-003, 6.570651e-003, 3.450590e-003, 1.140602e-002, 1.944507e-002, 3.670936e-003, 1.352796e-002, 9.790580e-003, -7.151560e-003, 1.640042e-003, 6.594888e-003, -1.263504e-002, -1.909052e-002, -1.004629e-002, -1.090376e-002, -1.699330e-002, -1.404708e-002, -8.635631e-004, 7.625381e-003, -1.237515e-003, -1.030512e-002, -1.116794e-002, -7.556078e-003, -1.558225e-003, 4.644717e-003, 9.813631e-003, 8.317664e-003, 2.766256e-003, 4.501843e-004, -3.171721e-003, -3.304229e-003, -1.300256e-003, 7.081101e-003, 1.320786e-002, 1.050564e-002, 5.857812e-003, 4.844949e-003, 3.271123e-003, -5.902545e-003, -6.509973e-003, 6.914815e-004, -8.373170e-003, -1.515057e-002, -1.054454e-002, -6.605950e-003, -1.202928e-002, 6.351545e-003, 6.086069e-003, 8.745240e-003, 1.747201e-002, 2.535743e-002, 4.155639e-003, 8.757840e-003, 5.584527e-003, 3.383639e-003, 1.029557e-002, -1.315473e-002, -2.425567e-002, -1.258420e-002, -5.565276e-003, -7.904252e-003, -1.154071e-002, 3.481286e-003, 1.296641e-002, 9.278588e-003, 1.313227e-004, -8.448615e-003, -1.688749e-002, -1.622733e-002, -9.840907e-003, -5.654755e-003, -3.168920e-003, -6.873288e-003, -1.229614e-002, -1.456087e-002, -1.356034e-002, -1.166687e-002, -1.131808e-002, -3.643980e-003, 3.466033e-003, 9.270512e-003, 4.867898e-003, 7.129602e-003, 8.911314e-003, 6.940754e-004, -1.556587e-002, -8.284155e-003, 2.180155e-005, -1.401108e-002, -1.083765e-002, -6.231871e-003, -7.595837e-003, -6.730365e-003, 5.471899e-003, 4.544087e-003, 1.773327e-002, 2.884870e-002, -8.032873e-004, 1.420460e-003, 1.138900e-002, 1.685212e-002, -2.840606e-003, -2.415063e-002, -1.102119e-002, -4.905261e-003, -7.340625e-003, -5.766988e-003, 7.210177e-003, 1.339775e-002, 1.576344e-002, 1.933850e-002, 1.200015e-002, -2.707629e-003, -1.252132e-002, -1.676574e-002, -1.663177e-002, -1.525485e-002, -1.669643e-002, -1.732294e-002, -1.778669e-002, -1.886980e-002, -1.905762e-002, -1.838270e-002, -1.648046e-002, -1.358256e-002, -6.711634e-003, -6.733477e-004, 1.077938e-003, 5.225278e-003, 1.081009e-002, 1.156163e-002, -6.473400e-003, -2.111872e-002, -7.811621e-003, -2.393832e-003, -1.430647e-002, -1.179382e-002, -5.373539e-003, -1.875650e-003, 1.225730e-002, -2.856207e-004, 1.032666e-002, 2.557595e-002, -9.629022e-003, -2.257983e-003, 1.499271e-002, 1.431755e-002, -1.288756e-002, -1.401860e-002, -1.971447e-003, -8.358817e-003, -4.210999e-003, 5.557569e-003, 1.202596e-002, 1.537516e-002, 2.811673e-002, 3.343366e-002, 2.217113e-002, 6.765943e-003, -7.834219e-003, -1.183144e-002, -1.089594e-002, -9.872164e-003, -8.686491e-003, -7.570226e-003, -8.390901e-003, -7.556288e-003, -5.700328e-003, -6.407757e-003, -9.544699e-003, -1.293443e-002, -1.150066e-002, -5.561260e-003, -1.298112e-003, 2.372637e-003, 1.009427e-002, 1.341898e-002, 5.147844e-003, -1.896775e-002, -1.819866e-002, 1.379365e-003, -2.043466e-003, -1.342360e-002, -7.213240e-003, 6.205518e-003, 1.846869e-002, 1.577879e-003, 3.310525e-003, 1.861201e-002, -1.818569e-002, -2.619129e-003, 1.172785e-002, 7.479407e-003, -4.680326e-003, -1.012501e-003, -2.686161e-003, -7.120764e-003, 2.027412e-003, 5.732366e-003, 5.541334e-003, 1.413226e-002, 3.778791e-002, 3.821246e-002, 1.907272e-002, 6.189248e-003, -6.225026e-003, -6.168586e-003, 7.446013e-004, 6.637205e-003, 1.609787e-002, 1.952885e-002, 1.992111e-002, 2.122758e-002, 2.040512e-002, 1.774068e-002, 9.906620e-003, -9.089004e-004, -3.706402e-003, 1.028973e-003, 1.997265e-003, 4.065996e-003, 3.808566e-003,

© ISO/IEC 2004 — All rights reserved


Copyright International Organization for Standardization
Provided by IHS under license with ISO
No reproduction or networking permitted without license from IHS
Not for Resale

8.909211e-003, 1.146301e-002, -4.524483e-003, -1.862010e-002, -4.404743e-003, 9.692003e-003, -7.905573e-003, -1.066881e-002, 6.514936e-003, 2.993803e-002, 1.350645e-002, -2.658283e-003, 1.311389e-002, 5.418602e-004, -8.023262e-003, 2.824813e-003, 6.572469e-003, 1.157525e-002, 8.109867e-003, -3.967200e-004, -1.446118e-003, 5.810324e-003, 1.039927e-003, -5.047262e-003, 1.769103e-002, 3.493025e-002, 2.393349e-002, 6.611111e-003, -3.730641e-003, -1.430017e-002, -1.263810e-002, -1.630941e-004, 1.555694e-002, 2.974772e-002, 3.631771e-002, 3.754698e-002, 3.423477e-002, 3.061047e-002, 2.569509e-002, 1.291897e-002, 3.584138e-003, -1.445121e-003, 1.390738e-003, 1.092356e-002, 1.107358e-002, 7.536209e-003, 6.088539e-003, 1.110116e-002, 9.347755e-003, -1.076690e-002, -1.024791e-002, 1.158617e-002, 1.724583e-003, -1.450377e-002, 4.372148e-003, 4.109065e-002, 1.759130e-002, -3.803975e-003, 1.038113e-002, 1.772030e-004, -1.668450e-002, -2.751603e-003, 1.053165e-002, 2.571703e-002, 1.420162e-002, 7.346922e-003, 1.038048e-002, 9.836056e-003, -5.858811e-003, -2.910531e-003, 1.669528e-002, 1.405813e-002, -5.160630e-003, -1.944760e-002, -2.674030e-002, -3.474534e-002, -2.792347e-002, -1.273687e-002, 5.609817e-003, 2.139711e-002, 2.808545e-002, 2.869918e-002, 2.422617e-002, 1.946099e-002, 1.388296e-002, 9.341235e-004, -8.453469e-003, -1.115029e-002, -6.361418e-003, 5.313873e-003, 1.411703e-002, 1.204782e-002, 7.606610e-003, 5.902176e-003, 1.717062e-002, 6.785909e-003, -8.889489e-003, 5.935255e-003, 1.189049e-002, -5.380255e-003, 3.438293e-003, 3.811393e-002, 1.556906e-002, -6.674353e-003, 1.048162e-002, 3.105866e-003, -1.143840e-002, 1.873028e-003, 2.111915e-002, 3.214164e-002, 1.270645e-002, 1.565273e-002, 2.477816e-002, 1.322180e-002, 2.094233e-004, 4.784874e-004, 3.983087e-003, -8.246176e-003, -2.808824e-002, -3.989835e-002, -4.724260e-002, -5.141220e-002, -3.965844e-002, -1.987377e-002, 8.909828e-004, 1.249186e-002, 1.679426e-002, 1.529012e-002, 8.830071e-003, 5.109989e-003, 1.946614e-003, -1.108633e-002, -2.284769e-002, -2.550622e-002, -1.960876e-002, -6.535521e-003, 6.673723e-003, 1.408581e-002, 9.973932e-003, 7.311263e-003, 1.806397e-002, 2.004161e-002, 3.885313e-003, 9.637189e-003, 2.072919e-002, 8.727205e-004, 1.061976e-002, 2.869924e-002, 8.230093e-003, -7.383711e-003, 1.181865e-002, 1.317160e-002, 1.190666e-003, 2.831859e-003, 2.881774e-002, 3.059955e-002, 1.092684e-002, 2.406236e-002, 3.311335e-002, 1.533015e-002, 4.379475e-003, -7.253719e-003, -1.043598e-002, -2.871134e-002, -4.577350e-002, -5.304682e-002, -5.919517e-002, -5.883007e-002, -4.089768e-002, -2.181445e-002, 7.042598e-004, 9.759247e-003, 1.023529e-002, 4.924565e-003, -2.067301e-003, -4.145105e-003, -5.010311e-003, -1.437346e-002, -2.704013e-002, -2.901142e-002, -2.544828e-002, -1.352034e-002, 3.958531e-003, 1.340545e-002, 1.149239e-002, 1.095389e-002, 1.450423e-002, 2.363092e-002, 1.501700e-002, 1.564089e-002, 2.455655e-002, 1.020075e-002, 1.791441e-002, 1.914967e-002, -1.560317e-003, -2.705405e-003, 9.987013e-003, 2.911474e-002, 1.101560e-002, 1.011703e-002, 3.258965e-002, 2.658478e-002, 5.871213e-003, 2.420608e-002, 3.284992e-002, 1.554057e-002, 1.041919e-003, -1.251902e-002, -2.088339e-002, -4.031478e-002, -5.264809e-002, -5.701434e-002, -5.667108e-002, -4.848292e-002, -3.100194e-002, -1.102630e-002, 1.337893e-002, 2.084356e-002, 1.557214e-002, 8.866525e-003, 3.011826e-003, -8.904056e-004, -2.451785e-003, -7.149910e-003, -1.841923e-002, -2.550745e-002, -2.592451e-002, -1.434324e-002, 3.641831e-003, 1.344423e-002, 1.450376e-002, 1.447375e-002, 1.546321e-002, 2.360421e-002, 2.300386e-002, 2.107366e-002, 2.216710e-002, 1.868421e-002, 2.439856e-002, 4.772752e-003, -1.377641e-002, -3.177890e-004, 4.569991e-003, 4.107376e-002, 1.974768e-002, 1.418430e-002, 3.222950e-002, 1.492897e-002, 3.792497e-003, 1.839568e-002, 2.611698e-002, 1.236656e-002, 5.286731e-004, -8.567507e-003, -2.074278e-002, -3.620449e-002, -3.845101e-002, -3.839392e-002, -3.661260e-002, -2.758347e-002, -1.393248e-002, 6.692328e-003, 2.717656e-002, 3.306379e-002, 3.092945e-002, 2.392850e-002, 1.957192e-002, 1.401936e-002, 7.276159e-003, 6.564269e-003, -4.745580e-003, -1.294429e-002, -1.652903e-002, -6.808470e-003, 7.228586e-003, 1.545006e-002, 1.429000e-002, 8.753500e-003, 1.007284e-002, 2.341868e-002, 2.622983e-002, 2.495353e-002, 2.163625e-002, 1.307961e-002, 2.472801e-002, 4.976115e-003, -1.672370e-002, 4.664400e-003, 3.491730e-003, 4.322792e-002, 2.275601e-002, 1.560070e-002, 2.774468e-002, 2.853976e-003, -3.390096e-003, 1.087880e-002, 2.032180e-002, 1.098060e-002, 2.228629e-003, -3.970676e-003, -8.962088e-003, -1.397636e-002, -1.501624e-002, -1.661778e-002, -1.731301e-002, -1.285180e-002, 1.570152e-003, 1.878410e-002, 3.384249e-002, 4.008824e-002, 4.112147e-002, 3.631211e-002, 3.274905e-002, 2.596081e-002, 1.754027e-002, 1.381486e-002, 3.052603e-003, -7.237570e-003, -1.615262e-002, -9.085697e-003, 5.785928e-003, 1.926195e-002, 2.126548e-002, 7.239710e-003, 6.179805e-003, 1.832370e-002, 2.514062e-002, 2.277801e-002, 1.678993e-002, 2.970672e-003, 1.689112e-002, 7.717081e-003, -9.974988e-003, 5.963888e-003, -3.609520e-003, 3.868287e-002, 2.284080e-002, 1.112664e-002, 1.399720e-002, -8.191358e-003, -9.181277e-003, 5.640313e-003, 1.342452e-002, 1.058283e-002, 8.462171e-003, 1.722277e-002, 2.118273e-002, 1.291457e-002, 4.146794e-003, -3.912209e-003, -1.181945e-002, -1.647874e-002, -5.615586e-003, 9.582988e-003, 2.367337e-002, 3.326404e-002, 3.826503e-002, 3.832741e-002, 3.396698e-002, 1.993669e-002, 4.782765e-004, -1.272991e-002, -2.671099e-002, -3.692274e-002, -3.846435e-002, -2.754213e-002, -9.123716e-003, 1.093800e-002, 2.022674e-002, 7.415465e-003, -1.623985e-003, 8.553742e-003, 1.870371e-002, 1.644907e-002, 9.823530e-003, -2.082646e-003, 1.035539e-002, 9.207987e-003, -2.775603e-003, 7.385101e-003, -1.166312e-002, 2.899168e-002, 1.534349e-002, 5.561394e-004,


© ISO/IEC 2004 — All rights reserved

Copyright International Organization for Standardization
Provided by IHS under license with ISO
No reproduction or networking permitted without license from IHS
Not for Resale

3.275490e-003, -1.946012e-002, -1.721917e-002, -3.195335e-003, 1.131227e-002, 1.392400e-002, 1.947120e-002, 3.633574e-002, 4.924700e-002, 4.427337e-002, 2.976957e-002, 1.061527e-002, -1.066210e-002, -2.644117e-002, -3.620751e-002, -2.550005e-002, -8.123305e-003, 4.772017e-003, 1.642328e-002, 1.859194e-002, 9.247520e-003, -1.361717e-002, -4.097856e-002, -5.662961e-002, -6.321179e-002, -5.833310e-002, -4.653962e-002, -2.991509e-002, -9.281508e-003, 1.240032e-002, 2.122779e-002, 1.070562e-002, -4.129498e-003, -3.527820e-003, 4.816704e-003, 8.488110e-003, 4.019067e-003, -1.232909e-003, 5.768676e-003, 8.632486e-003, 1.895052e-003, 8.710424e-003, -2.230574e-002, 1.575488e-002, 3.378161e-003, -6.910100e-003, 1.019767e-003, -1.739389e-002, -1.101231e-002, -6.432619e-003, 4.281841e-003, 1.310419e-002, 1.778624e-002, 4.408427e-002, 6.189235e-002, 6.545076e-002, 6.026279e-002, 4.033499e-002, 8.937005e-003, -2.062544e-002, -4.080465e-002, -4.542140e-002, -2.559567e-002, -1.251045e-002, -9.342762e-004, 9.630085e-004, -1.260599e-002, -3.755345e-002, -5.406739e-002, -4.742528e-002, -3.295503e-002, -2.233180e-002, -7.121932e-003, 1.014443e-002, 2.697298e-002, 3.405988e-002, 2.855642e-002, 1.843223e-002, 6.962184e-004, -2.091483e-003, -7.120740e-003, -4.321367e-003, 6.711461e-004, -4.066801e-003, -2.955670e-003, 5.051426e-003, 6.038738e-003, 7.221220e-003, -2.440760e-002, 5.721187e-003, -2.657609e-003, -1.444507e-002, -1.835501e-003, -1.089333e-002, 2.236136e-003, -2.260054e-003, -2.165713e-003, 8.119402e-003, 1.377649e-002, 2.497153e-002, 4.695059e-002, 5.321944e-002, 3.788021e-002, 1.644188e-002, -6.416863e-003, -2.772022e-002, -3.846565e-002, -3.674024e-002, -1.692479e-002, 6.233650e-003, 1.690098e-002, 1.618335e-002, 7.189997e-003, -2.063242e-002, -2.783051e-002, -2.374994e-002, -2.054451e-002, -8.088188e-003, 1.351586e-002, 4.169648e-002, 5.627312e-002, 5.416828e-002, 4.280222e-002, 2.143217e-002, 1.003471e-002, 1.921864e-003, -5.089936e-003, -1.321658e-002, -3.953568e-003, -6.422449e-003, -5.745643e-003, 2.446259e-003, 7.641309e-003, 7.014486e-003, -6.260315e-003, -3.946419e-003, -1.160844e-002, -2.302464e-002, -6.899813e-003, -4.287653e-003, 7.276674e-003, 6.506156e-004, 1.366848e-003, 4.142780e-003, -1.656536e-002, -6.840687e-003, 1.535956e-002, 1.095636e-002, -1.442683e-003, -1.686241e-002, -3.511350e-002, -5.593700e-002, -6.288067e-002, -5.075728e-002, -1.593387e-002, 2.980281e-002, 4.510482e-002, 4.251853e-002, 3.197167e-002, -7.076457e-003, -3.916773e-002, -5.777668e-002, -5.933503e-002, -3.878094e-002, -1.079626e-002, 1.797953e-002, 3.707513e-002, 3.674698e-002, 2.317613e-002, 1.041336e-003, -1.846236e-003, 1.140376e-002, 1.228168e-003, -1.572277e-002, -1.088409e-002, -8.770631e-003, 1.169441e-003, 3.358190e-003, 5.288812e-003, 4.864262e-003, -2.554461e-003, -1.147585e-002, -1.299064e-002, -1.104785e-002, 8.640891e-004, -7.877952e-003, -4.376523e-004, -3.187805e-003, 2.261793e-003, -8.783587e-003, -2.779752e-002, -9.533536e-003, 2.771745e-002, 3.805438e-002, 3.046831e-002, 4.283256e-003, -1.007021e-002, -1.330849e-002, -3.130201e-002, -3.511555e-002, -1.053715e-002, 4.722768e-002, 5.760286e-002, 4.249373e-002, 3.598603e-002, -5.952510e-003, -4.583770e-002, -5.384214e-002, -2.227862e-002, -2.797926e-003, 5.891884e-003, 2.383153e-002, 4.187674e-002, 4.277208e-002, 2.088068e-002, -1.100600e-002, -1.676938e-002, 1.655643e-002, 1.727628e-002, -1.507160e-002, -4.797852e-003, -2.139929e-003, 1.324013e-002, 8.057168e-003, -2.107659e-003, 5.272882e-003, 9.421684e-004, -1.638528e-002, -1.203193e-002, -8.199253e-004, 6.150599e-003, -4.195456e-003, 1.794167e-003, -4.411222e-003, 4.851826e-003, -1.515005e-002, -2.191437e-002, -5.179700e-003, 2.619455e-002, 3.103025e-002, 1.151066e-002, -1.678308e-002, -1.331533e-002, 2.175682e-002, 8.897251e-003, -1.637669e-004, 5.262383e-003, 4.428351e-002, 4.331631e-002, 1.448569e-002, 2.084482e-002, 5.980125e-003, -2.531842e-002, -1.241420e-002, 2.469163e-002, 2.350896e-002, -4.685658e-003, -1.034436e-002, 5.511040e-004, 2.856011e-002, 1.685265e-002, -1.937624e-002, -1.997659e-002, 9.080431e-003, 2.009863e-002, -1.412280e-002, 6.976524e-003, 2.685962e-003, 1.219562e-002, 5.144557e-003, -1.247848e-003, 1.058782e-002, 1.525279e-002, -1.093662e-002, -4.966879e-003, 1.169771e-002, 1.262630e-002, 4.313923e-003, 4.897558e-003, -4.419404e-003, -7.748237e-003, -3.262822e-002, -3.242053e-002, -1.493997e-002, 1.085502e-002, 3.569348e-002, 4.316698e-002, 1.524349e-002, 5.082653e-003, 4.702176e-002, 3.436653e-002, 1.566624e-002, 1.698601e-002, 2.307422e-002, -4.721810e-003, -1.924475e-002, -2.731649e-003, 2.315693e-002, 9.994961e-004, 4.432276e-003, 5.758155e-002, 5.592967e-002, -1.504558e-003, -1.603600e-002, -9.747111e-003, -1.424636e-002, -2.407102e-002, -3.614636e-002, -3.046458e-002, -3.472644e-003, 1.330306e-002, -1.678468e-002, 6.520517e-003, -9.801045e-003, -4.617380e-003, -6.974833e-003, -9.742518e-003, 1.878267e-002, 2.517184e-002, -8.663520e-003, -4.872839e-003, 1.486021e-002, 1.691665e-002, 7.373560e-003, 3.209854e-003, -7.887402e-003, -5.248806e-003, -2.027962e-002, -2.134205e-002, -9.219148e-003, 1.816724e-002, 3.587313e-002, 3.661021e-002, 1.824577e-002, 7.520529e-003, -2.740779e-004, -1.527431e-002, -8.610986e-003, 1.506896e-002, -5.661388e-004, -2.266142e-002, -2.985236e-002, -1.849000e-002, 2.946620e-002, -3.295979e-004, -2.582596e-002, -1.591413e-003, 2.327447e-002, 1.277417e-002, 9.963346e-003, 1.029772e-002, -4.363338e-003, -2.655180e-002, -3.049310e-002, -1.754218e-002, 1.350538e-003, 8.443912e-003, -2.358954e-002, -5.844219e-004, -2.826084e-002, -1.967375e-002, -1.649006e-002, -1.388186e-002, 2.313171e-002, 2.709496e-002, -4.605476e-003, -1.437436e-003, 1.790720e-002, 1.458272e-002, 5.607278e-003, 5.134650e-003, -2.329472e-003, 5.709993e-003, -3.654378e-003, -1.605813e-003, 1.138961e-002, 2.415276e-002, 1.631678e-002, -4.273282e-003, -2.780588e-002, -4.827707e-002, -6.904386e-002, -7.035281e-002, -3.506705e-002,

© ISO/IEC 2004 — All rights reserved


Copyright International Organization for Standardization
Provided by IHS under license with ISO
No reproduction or networking permitted without license from IHS
Not for Resale

4.747706e-003, -9.071387e-003, -1.260859e-002, -2.290609e-002, -2.532457e-002, 1.572964e-002, -2.473964e-004, -6.230216e-002, -6.477062e-002, -3.982681e-002, -1.997060e-002, -2.139672e-004, 1.482965e-002, 2.587647e-002, 1.344563e-002, 3.475726e-003, 1.250123e-002, 1.052432e-002, 5.875546e-003, -1.417561e-002, 8.933660e-003, -2.355044e-002, -1.656927e-002, -1.414236e-002, -1.179578e-002, 1.854910e-002, 1.602434e-002, -1.537206e-002, -1.296575e-002, 7.986347e-003, 1.893534e-003, 4.527424e-003, 4.307933e-003, -3.119435e-003, 1.084323e-002, 7.765611e-003, 1.125242e-002, 1.990270e-002, 3.046730e-002, 1.129233e-002, -2.422088e-002, -5.394940e-002, -7.436333e-002, -8.765758e-002, -6.937848e-002, -2.496978e-002, -3.033591e-003, -8.636965e-003, 4.545491e-003, -1.347438e-002, -2.639687e-002, -6.500693e-004, 1.594002e-002, -4.516521e-002, -7.892884e-002, -7.381056e-002, -5.194385e-002, -2.285699e-002, 5.220079e-003, 3.466366e-002, 3.388014e-002, 2.221681e-002, 1.530425e-002, 1.209594e-002, 3.446750e-003, -2.384754e-003, 2.051372e-002, 2.215806e-003, 5.576504e-003, -2.681032e-004, -3.767283e-003, 1.454192e-002, -1.203697e-003, -2.794449e-002, -2.224809e-002, -5.957565e-003, -1.151198e-002, 1.578200e-004, -5.729739e-003, -8.020218e-003, 8.068321e-003, 1.186707e-002, 1.135925e-002, 2.937180e-002, 3.804049e-002, 1.970254e-002, -1.826080e-002, -4.448618e-002, -5.732318e-002, -5.464628e-002, -2.904470e-002, 2.104819e-003, -1.349346e-002, 3.970379e-004, 1.657464e-002, -2.754178e-003, -2.225402e-002, -1.163372e-002, 2.001790e-002, 1.355630e-002, -3.249479e-002, -5.484650e-002, -4.466221e-002, -1.814154e-002, 1.395685e-002, 4.491499e-002, 4.709480e-002, 2.591401e-002, 9.690037e-003, 4.165467e-003, -3.740622e-003, 1.953992e-003, 2.536325e-002, 2.193891e-002, 1.264265e-002, -2.763295e-003, -3.629117e-003, -5.890750e-005, -2.140938e-002, -3.626921e-002, -3.255433e-002, -6.847164e-003, -1.689443e-002, -2.064493e-002, -2.213318e-002, -1.728075e-002, -9.010116e-005, 7.860260e-003, 1.203573e-002, 2.877123e-002, 4.952143e-002, 4.050697e-002, 1.662592e-002, 1.229669e-003, 3.251493e-004, 1.059056e-002, 2.602498e-002, 4.440503e-003, -1.408692e-002, 1.253067e-002, 2.241078e-002, 2.331398e-003, -1.784533e-002, -1.177966e-002, 9.115678e-003, 3.441348e-002, 3.530420e-002, 1.172919e-002, 4.241345e-004, 8.654898e-003, 3.450112e-002, 5.634002e-002, 5.037068e-002, 2.429802e-002, 3.896630e-003, -3.325364e-003, -8.589953e-003, -4.128025e-003, 1.290498e-002, 1.697982e-002, 4.174484e-003, -7.144228e-003, -1.367668e-002, -7.612216e-003, -3.846766e-002, -4.310310e-002, -4.593480e-002, -3.288378e-003, -1.381139e-002, -3.558367e-002, -4.348829e-002, -2.931735e-002, -8.645046e-003, 2.727453e-004, 5.999166e-003, 2.228938e-002, 4.426720e-002, 5.101828e-002, 4.934529e-002, 4.903521e-002, 5.046823e-002, 4.769207e-002, 2.727729e-002, -4.795312e-003, -2.177764e-003, 1.990271e-002, 1.858581e-002, -4.916145e-003, -1.546106e-002, -2.405273e-003, 6.587463e-003, 2.396801e-002, 4.869456e-002, 5.223663e-002, 4.478837e-002, 4.217536e-002, 4.853926e-002, 5.334610e-002, 4.080521e-002, 1.055696e-002, -7.967218e-003, -4.108415e-003, -1.113002e-002, -1.483821e-002, -1.010624e-002, 3.218962e-003, 2.208055e-003, -1.303065e-002, -1.750373e-002, -1.363113e-002, -3.071251e-002, -3.421884e-002, -3.759863e-002, -3.097196e-003, -1.076922e-002, -4.085029e-002, -5.120749e-002, -3.704144e-002, -1.362323e-002, -5.384633e-003, -7.168157e-003, 7.300912e-003, 2.895720e-002, 4.285355e-002, 4.709676e-002, 5.310460e-002, 4.698590e-002, 3.498634e-002, 8.204693e-003, 8.859924e-003, 1.050136e-002, 2.372200e-002, 1.673590e-002, -5.117098e-003, -1.854609e-002, -5.621240e-004, 1.836585e-002, 1.626539e-002, 3.551878e-002, 4.566428e-002, 5.313642e-002, 5.240269e-002, 5.059885e-002, 4.442035e-002, 2.226329e-002, -4.459057e-003, -1.403299e-002, -1.121781e-002, -1.927357e-002, -2.483061e-002, -2.896297e-002, -1.240123e-002, -2.316585e-003, -1.448568e-002, -1.655284e-002, -9.960006e-003, -3.119657e-002, -2.035126e-002, -1.913990e-002, 2.484925e-004, 5.589309e-005, -3.600194e-002, -4.019062e-002, -2.816058e-002, -8.015770e-003, -8.497572e-003, -2.339663e-002, -1.528945e-002, 2.644978e-003, 2.069934e-002, 3.337184e-002, 3.672533e-002, 2.763749e-002, 1.042592e-002, 5.892331e-003, 2.475408e-002, 2.500120e-002, 2.750458e-002, 2.217680e-002, -3.352113e-003, -2.336210e-002, -5.977110e-003, 2.255297e-002, 1.383394e-002, 1.317037e-002, 2.239160e-002, 3.915647e-002, 4.591596e-002, 4.178732e-002, 2.475504e-002, -2.156632e-003, -2.264911e-002, -2.442246e-002, -1.981224e-002, -2.508854e-002, -2.726790e-002, -3.114743e-002, -1.994103e-002, -3.537227e-003, -7.610310e-003, -1.009228e-002, -7.935003e-003, -2.217384e-002, -2.847473e-003, 6.449398e-004, 4.390387e-003, 1.004249e-002, -1.401810e-002, -1.791631e-002, -1.227851e-002, 1.454793e-003, -1.071869e-002, -3.355519e-002, -3.210354e-002, -1.538690e-002, 3.895811e-003, 1.698433e-002, 2.109357e-002, 1.471154e-002, -6.394848e-004, 1.127504e-002, 2.277358e-002, 1.113895e-002, 1.468868e-002, 1.467229e-002, -4.715643e-003, -2.909540e-002, -2.120591e-002, -3.321277e-003, 2.445833e-003, -2.604792e-003, 7.049571e-004, 1.121050e-002, 2.635653e-002, 2.618678e-002, 5.599027e-003, -2.068886e-002, -3.270768e-002, -2.840585e-002, -1.754511e-002, -1.987367e-002, -2.255441e-002, -2.757438e-002, -2.296997e-002, -2.646192e-003, -2.103488e-003, -2.560442e-003, -7.621120e-003, -1.378844e-002, 1.694706e-002, 1.778417e-002, 6.317665e-003, 2.033139e-002, 4.034181e-003, 7.520057e-003, 1.136644e-002, 1.693333e-002, -2.321558e-003, -4.231276e-002, -4.852138e-002, -3.317280e-002, -9.340819e-003, 7.364746e-003, 1.775948e-002, 1.457932e-002, 1.142295e-002, 1.739327e-002, 1.345807e-002, 2.627756e-003, 2.383733e-003, -4.047129e-003, -1.778920e-002, -3.378599e-002, -2.958995e-002, -1.282983e-002, 1.683989e-003, -1.704723e-003, -2.439131e-003, 4.059239e-003, 9.745698e-003, 9.559989e-003, -1.254418e-002, -3.706382e-002, -4.088397e-002, -


© ISO/IEC 2004 — All rights reserved

Copyright International Organization for Standardization
Provided by IHS under license with ISO
No reproduction or networking permitted without license from IHS
Not for Resale

2.639546e-002, -1.662327e-002, -1.164102e-002, -1.365004e-002, -3.009014e-002, -2.017730e-002, -3.816344e-003, 2.045528e-003, 1.331667e-003, -1.131727e-002, -5.729397e-003, 2.511794e-002, 2.058946e-002, 9.395394e-003, 1.566939e-002, 6.993864e-004, 1.106795e-002, 2.823256e-002, 3.117252e-002, 7.510800e-003, -4.475180e-002, -5.764298e-002, -4.409570e-002, -1.837365e-002, 1.903563e-003, 1.656459e-002, 1.796739e-002, 2.178624e-002, 2.387106e-002, 1.534508e-002, 7.322691e-003, 3.633552e-003, -7.978597e-003, -1.837093e-002, -2.519360e-002, -1.850413e-002, -1.894313e-003, 8.119222e-003, 6.345074e-003, 7.903444e-003, 9.916187e-003, 7.029738e-003, -6.342390e-003, -2.651355e-002, -4.602524e-002, -4.383282e-002, -2.303483e-002, -9.352420e-003, -1.710875e-003, -8.329277e-003, -2.549228e-002, -1.246186e-002, -2.737660e-004, 4.708012e-003, 6.544186e-004, -1.401982e-002, -4.809377e-003, 2.585318e-002, 1.956547e-002, 4.030949e-003, 3.465306e-003, -6.413241e-003, 6.641442e-003, 3.093507e-002, 3.078368e-002, 1.471005e-002, -3.711493e-002, -5.831582e-002, -4.972519e-002, -2.504915e-002, 1.774201e-004, 1.361862e-002, 1.865215e-002, 1.925132e-002, 1.410345e-002, 7.579219e-003, 6.245714e-004, -2.822958e-003, -1.029056e-002, -1.306756e-002, -2.013368e-002, -1.466935e-002, -5.480004e-003, 4.691746e-003, 1.140178e-002, 1.867770e-002, 1.927059e-002, 1.039086e-002, -1.301403e-002, -3.785464e-002, -4.701507e-002, -4.225006e-002, -1.888327e-002, -4.860998e-003, 5.964011e-003, -6.543952e-003, -1.939065e-002, -5.151758e-003, 8.559352e-004, -3.449334e-003, -2.097024e-003, -1.602353e-002, -2.362347e-003, 1.647940e-002, 1.691031e-002, -4.068801e-003, 1.050231e-003, -8.046172e-003, 6.350665e-003, 2.815384e-002, 1.913019e-002, 1.747592e-002, -2.570182e-002, -5.587450e-002, -4.509004e-002, -2.371601e-002, 3.197203e-003, 1.146352e-002, 5.884799e-003, 7.545343e-004, -1.003960e-002, -1.610123e-002, -1.122169e-002, -3.188124e-003, -4.575501e-003, -6.269305e-003, -1.406203e-002, -1.562668e-002, -1.448914e-002, -7.996779e-003, 3.496680e-004, 1.106608e-002, 1.701928e-002, 9.519469e-003, -8.668008e-003, -3.827657e-002, -4.623993e-002, -3.869382e-002, -1.845167e-002, -2.556513e-003, 1.471451e-002, 3.788713e-003, -2.723786e-003, 4.943397e-004, -5.420748e-003, -9.856118e-003, -8.197062e-003, -1.638269e-002, -5.177255e-003, 1.979133e-002, 1.016541e-002, -4.235576e-003, 6.854839e-003, 6.830110e-003, 1.510861e-002, 2.723014e-002, -1.330168e-003, 6.718789e-003, -1.601699e-002, -4.805748e-002, -3.706802e-002, -1.243435e-002, 9.196557e-003, 9.058223e-003, -9.939294e-003, -3.141357e-002, -3.129806e-002, -1.259312e-002, 1.282570e-002, 2.684213e-002, 2.108768e-002, 1.969646e-002, 1.383248e-002, 6.093819e-003, -6.733405e-003, -1.423145e-002, -1.818540e-002, -1.092546e-002, 5.744113e-003, 9.477423e-003, -1.620688e-003, -3.025621e-002, -3.833474e-002, -2.832710e-002, -1.905070e-002, -6.263185e-003, 1.689724e-002, 1.739986e-002, 9.010755e-003, 9.259508e-005, -1.021130e-002, -1.270315e-002, -1.148125e-002, -1.342457e-002, -5.194039e-003, 1.762962e-002, 4.729728e-003, -1.246339e-003, 1.142656e-002, 1.812611e-002, 2.251981e-002, 2.546572e-002, -2.316004e-002, -1.615365e-002, -8.587709e-003, -3.190793e-002, -2.599430e-002, 6.103655e-004, 1.753226e-002, 1.050964e-002, -1.636591e-002, -3.140801e-002, -2.527636e-002, -7.995050e-003, 3.634678e-003, 7.616005e-003, 4.981806e-003, 8.673385e-003, 3.716925e-003, -6.097524e-003, -1.260468e-002, -1.462581e-002, -2.150680e-002, -1.742938e-002, -4.841756e-003, 1.125714e-002, 6.419567e-003, -1.740640e-002, -2.382706e-002, -1.864622e-002, -2.470010e-002, -1.343010e-002, 1.213474e-002, 2.405421e-002, 2.374563e-002, -3.822415e-003, -6.876807e-003, -4.953434e-003, -1.409775e-002, -8.972552e-003, -1.382185e-002, 1.525173e-002, 2.427460e-004, -3.072849e-003, 4.523418e-003, 1.502637e-002, 9.942106e-003, 1.667526e-002, -3.047582e-002, -3.995166e-002, -1.063766e-002, -1.425220e-002, -1.165233e-002, 1.313390e-002, 3.249971e-002, 2.733952e-002, 9.968069e-003, -2.364753e-003, 1.188754e-003, 5.006903e-003, 4.885769e-003, 4.942694e-003, 4.028868e-003, 3.566583e-003, -1.081687e-003, -1.103321e-002, -1.792719e-002, -2.026187e-002, -1.841153e-002, -7.788843e-003, 8.252218e-003, 2.067250e-002, 1.361187e-002, -1.599658e-003, -3.756615e-003, -6.568264e-003, -2.468414e-002, -1.320368e-002, 4.731487e-003, 1.569526e-002, 1.361270e-002, -8.260451e-003, -9.220539e-003, -3.307866e-004, -1.249413e-003, 1.821350e-004, -1.783531e-002, 1.196070e-002, -4.328867e-003, -9.327820e-003, -1.177010e-003, 9.635412e-003, -4.833046e-003, 5.635790e-003, -1.842984e-002, -5.136598e-002, -1.518768e-002, -1.749837e-003, -1.975500e-004, 2.413950e-002, 4.902078e-002, 3.688146e-002, -1.465745e-004, -2.587548e-002, -2.377222e-002, -9.198124e-003, 4.925492e-003, 2.428033e-002, 3.196115e-002, 3.019691e-002, 2.413598e-002, 4.176444e-003, -1.979545e-002, -3.573652e-002, -3.568847e-002, -1.540302e-002, 1.178168e-002, 2.114848e-002, 1.512008e-002, 1.013820e-002, 1.392715e-002, 1.077930e-003, -1.156895e-002, -1.205590e-002, -9.103092e-003, 3.193132e-003, 6.602773e-003, -1.333387e-002, -1.352842e-002, -1.263579e-003, -9.329072e-004, -1.155921e-003, -2.042665e-002, 1.221653e-002, -6.162332e-003, -1.948250e-002, -8.009153e-003, 1.189593e-002, -8.894954e-004, -6.404299e-003, -5.410211e-003, -4.056942e-002, -1.055928e-002, 2.554237e-003, 1.122037e-002, 2.979026e-002, 4.759239e-002, 1.916128e-002, -3.294826e-002, -6.047450e-002, -6.193322e-002, -4.338097e-002, -1.722733e-002, 8.495998e-003, 2.117613e-002, 2.185737e-002, 1.122513e-002, -1.214082e-002, -3.785895e-002, -5.107274e-002, -5.040531e-002, -3.513085e-002, -6.736802e-003, 1.763975e-002, 1.631867e-002, 1.714509e-002, 2.017027e-002, 8.107264e-003, 8.594816e-003, -2.514187e-003, -1.235614e-002, -5.805185e-003, 3.327528e-003, -4.898619e-003, -9.475692e-004, 1.034995e-002, -5.007701e-004, -1.603793e-003, -2.920665e-002, 9.275733e-003, 2.486679e-003, -1.887767e-002, -9.898077e-003, 1.308849e-002,

© ISO/IEC 2004 — All rights reserved


Copyright International Organization for Standardization
Provided by IHS under license with ISO
No reproduction or networking permitted without license from IHS
Not for Resale

7.117391e-003, -7.777562e-003, -6.995313e-004, -8.263733e-003, 7.420984e-003, 1.376929e-002, 1.843882e-002, 2.847809e-002, 4.498232e-002, 1.466986e-002, -3.746889e-002, -6.522005e-002, -7.110156e-002, -6.246201e-002, -4.368915e-002, -2.128683e-002, -1.069064e-002, -9.291057e-003, -1.702599e-002, -3.455247e-002, -5.644446e-002, -6.710335e-002, -6.370039e-002, -4.534734e-002, -1.321555e-002, 1.374294e-002, 2.081179e-002, 1.825526e-002, 1.511557e-002, 2.008539e-002, 2.366291e-002, 3.095913e-003, -1.106491e-002, -8.543760e-003, 4.650187e-003, 8.340832e-003, 1.999132e-002, 2.371870e-002, 2.481494e-003, -5.038794e-004, -2.184276e-002, 1.713486e-002, 1.903966e-002, -8.692757e-003, -4.597492e-003, 1.631821e-002, 1.640684e-002, -2.488252e-003, 8.010431e-003, 2.570881e-002, 2.816605e-002, 2.513561e-002, 1.862932e-002, 2.600856e-002, 4.400423e-002, 2.647807e-002, -2.119735e-002, -5.048869e-002, -5.592663e-002, -4.806713e-002, -3.623504e-002, -1.843453e-002, -8.938734e-003, -8.965076e-003, -1.733863e-002, -3.527745e-002, -5.027337e-002, -5.521615e-002, -4.818601e-002, -3.414445e-002, -2.313775e-003, 1.833052e-002, 2.386048e-002, 1.388809e-002, 1.126763e-002, 2.940009e-002, 2.594605e-002, 1.411865e-002, -1.935638e-003, -2.518922e-003, 6.209975e-003, 1.526498e-002, 2.798013e-002, 2.737438e-002, 7.674047e-003, 5.810405e-003, -1.765601e-002, 2.740897e-002, 2.013713e-002, 5.621315e-004, 1.341115e-003, 9.708849e-003, 1.552657e-002, 4.563521e-003, 1.478968e-002, 2.443143e-002, 1.373397e-002, 1.051846e-002, 1.661292e-002, 1.622633e-002, 3.121315e-002, 2.937399e-002, -1.019436e-003, -2.776771e-002, -3.845781e-002, -2.773615e-002, -1.308378e-002, -4.659867e-004, 4.450488e-003, 3.394640e-003, -2.393991e-003, -1.496813e-002, -2.644230e-002, -3.067125e-002, -2.675235e-002, -1.401164e-002, 1.047170e-002, 2.273008e-002, 1.839103e-002, 6.421419e-004, 2.863273e-003, 1.776931e-002, 1.505193e-002, 1.556924e-002, 1.081785e-002, 9.461076e-003, 7.933878e-003, 7.291076e-003, 1.648856e-002, 1.575099e-002, 3.268275e-003, 6.548744e-003, -1.641302e-002, 3.173576e-002, 1.926026e-002, 5.093147e-003, 2.692426e-003, 2.038812e-003, 1.127815e-002, 4.385977e-003, -1.300211e-003, -3.928198e-003, -1.319419e-002, -9.729176e-004, 1.465705e-002, 8.770734e-003, 1.282346e-002, 1.998378e-002, 5.529958e-003, -1.305117e-002, -2.167095e-002, -1.641500e-002, -2.569125e-003, 1.182137e-003, 3.946485e-003, 6.946859e-003, 7.662933e-003, -2.766151e-004, -7.566231e-003, -8.195130e-003, -4.520239e-003, 3.840834e-003, 1.601484e-002, 2.063168e-002, 7.607072e-003, -7.893183e-003, -4.219381e-003, -4.260895e-003, -1.985083e-003, -2.436582e-005, 1.146649e-002, 1.883390e-002, 4.476209e-003, -7.320392e-003, -1.801759e-003, -4.686040e-003, -5.640002e-003, 2.744242e-003, -2.184982e-002, 2.473798e-002, 1.223978e-002, -1.785836e-003, -4.116580e-003, -3.850066e-003, 9.861360e-003, 6.931017e-004, -1.882783e-002, -2.510297e-002, -2.036623e-002, 2.059958e-004, 1.188961e-002, 7.892518e-003, 5.715206e-003, 1.036739e-002, 8.281063e-003, -3.446751e-003, -9.742406e-003, -5.714450e-003, -2.501790e-003, -2.757207e-003, -9.972445e-005, 4.201470e-003, 5.401575e-003, 3.469077e-003, 3.248865e-003, 3.848954e-003, 5.743356e-003, 7.803079e-003, 1.616109e-002, 1.791692e-002, -2.638182e-004, -1.050170e-002, -7.515371e-003, -1.178310e-002, -2.342152e-002, -2.670120e-002, -1.159740e-003, 2.130056e-002, -2.803681e-003, -1.309777e-002, -1.255594e-002, -1.518585e-002, -1.009683e-002, 3.775963e-003, -2.953038e-002, 1.586536e-002, 4.788409e-003, -1.018156e-002, -1.213243e-002, -3.467293e-003, 2.142235e-003, -4.277576e-003, -1.711573e-002, -1.277547e-002, -6.892507e-003, 8.075940e-003, 1.096805e-002, 3.425212e-003, 1.313419e-003, 8.001656e-003, 1.171662e-002, 1.004969e-003, -4.877517e-003, -3.441364e-003, -1.746865e-003, 2.649145e-003, 5.494277e-003, 7.501868e-003, 8.234784e-003, 8.208490e-003, 6.478447e-003, 7.990762e-003, 9.532185e-003, 8.831580e-003, 1.488894e-002, 1.909110e-002, 8.078730e-003, 4.041764e-004, 1.549650e-003, 2.966306e-003, -8.898953e-003, -2.357478e-002, -7.926653e-003, 1.613398e-002, -3.310533e-003, -8.712020e-003, -1.539455e-002, -1.774613e-002, -1.155121e-002, 1.046043e-002, -3.163589e-002, 3.918879e-003, 5.065750e-003, -2.209139e-003, -7.293497e-003, -6.996379e-003, -1.362106e-002, -6.883119e-003, 2.690120e-003, 7.281730e-003, 8.081302e-003, 9.703568e-003, 5.264944e-003, -4.201526e-003, -1.135232e-002, -3.479308e-003, 1.095191e-002, 5.825108e-003, 1.455296e-004, -2.131841e-003, -2.680033e-003, 1.867731e-003, 6.592401e-003, 9.426416e-003, 1.022113e-002, 1.081995e-002, 1.102220e-002, 1.058695e-002, 5.860189e-003, 7.312484e-004, 8.167135e-003, 2.227994e-002, 2.335320e-002, 1.321194e-002, 1.417656e-002, 1.704868e-002, 2.006611e-002, 8.836427e-003, 6.566881e-003, 1.397946e-002, -2.157162e-003, 1.008027e-003, -1.999406e-003, -5.072185e-003, -2.097476e-003, 1.086918e-002, -2.185959e-002, 1.404968e-002, 1.763571e-002, 3.941846e-003, -2.862377e-003, -1.085441e-002, -1.174747e-002, 7.531121e-003, 2.020077e-002, 1.094303e-002, -1.463788e-003, 4.020908e-003, 2.518978e-003, -7.841809e-003, -1.456105e-002, -9.806299e-003, 1.152367e-002, 1.394937e-002, 7.135893e-003, 2.958239e-003, 1.778739e-003, 6.362619e-003, 1.282672e-002, 1.805617e-002, 2.194994e-002, 2.613130e-002, 2.433364e-002, 1.516140e-002, -1.286067e-002, -1.759284e-002, -1.162213e-002, 3.253904e-003, 1.083657e-002, 2.441298e-003, 6.997074e-004, -2.591347e-003, 1.736685e-002, 5.301496e-003, 5.934472e-003, -3.866959e-003, -1.207624e-002, -2.099306e-003, 5.593457e-003, 3.653042e-003, -7.789839e-003, -2.799682e-003, -1.647257e-002, 1.186115e-002, 1.235048e-002, -4.044953e-003, -1.419267e-002, -1.688178e-002, -1.140493e-002, -5.806251e-004, 4.568561e-003, -7.079775e-003, -1.627323e-002, -6.885404e-003, -8.499671e-003, -4.550008e-003, -3.688286e-003, -3.868448e-003, 6.869888e-003, 1.031785e-002, -9.320320e-004, -5.113684e-003, -6.043387e-003, -1.118611e-003,


© ISO/IEC 2004 — All rights reserved

Copyright International Organization for Standardization
Provided by IHS under license with ISO
No reproduction or networking permitted without license from IHS
Not for Resale

1.850390e-003, 2.737634e-003, 1.036653e-002, 1.502551e-002, 9.945428e-003, -1.852297e-003, -1.468666e-002, -1.702079e-002, -9.203634e-003, 3.367982e-003, 1.652711e-002, 1.125137e-002, 1.371123e-003, -7.076205e-004, 1.283348e-002, 1.525779e-002, 1.685398e-002, -2.934860e-003, -1.230652e-002, 1.067711e-002, 2.394581e-002, 2.391117e-003, -7.213188e-003, -1.016322e-002, -1.205822e-002, 1.122067e-002, 9.144028e-003, -1.179174e-002, -7.489639e-003, 6.278158e-004, 5.915678e-004, -4.287569e-003, 1.623496e-003, -6.564600e-003, -1.375711e-002, -6.865973e-003, 1.531693e-003, 9.426397e-003, 5.577482e-003, 5.052192e-003, 1.177923e-002, 8.361428e-003, -6.191904e-003, -1.384105e-002, -1.016554e-002, -5.962598e-003, -2.450069e-003, 1.549842e-003, 4.084438e-003, 5.807865e-003, 3.639358e-003, -6.041289e-003, -1.700393e-002, -1.652714e-002, -8.348056e-003, 7.028808e-003, 1.369497e-002, 3.863842e-003, -4.093201e-003, -6.324973e-003, -5.652936e-003, 3.758454e-003, 1.609645e-002, 5.822266e-003, -9.305303e-003, 6.664842e-003, 2.661414e-002, 1.054187e-002, -5.654782e-003, -1.477046e-002, -2.239349e-002, 1.098213e-003, 8.525066e-003, -2.529827e-003, -1.047945e-003, 4.819441e-003, -2.040801e-003, -6.799067e-003, -2.698275e-003, -2.586932e-003, -6.073352e-003, 9.461933e-003, 2.734536e-002, 2.657661e-002, 1.651734e-002, 1.217509e-002, 1.480693e-002, 9.338688e-003, 3.296045e-003, -6.955558e-003, -1.178795e-002, -6.354537e-003, -3.081983e-003, 1.703510e-004, 8.299020e-004, 4.581836e-004, 1.323302e-003, -7.532260e-004, -7.962651e-003, -9.473752e-003, 3.067447e-003, 1.168070e-002, 1.425899e-002, 5.394573e-003, -6.940161e-003, -1.819868e-002, -8.977094e-003, -5.464458e-003, 8.492853e-003, 1.295846e-002, -2.886556e-003, -1.074027e-002, 2.855114e-003, 9.520959e-004, -9.168732e-003, -2.476965e-002, -2.224061e-002, 1.702384e-002, 3.629716e-002, 2.568180e-002, 1.412760e-002, 1.958063e-002, 1.681939e-002, 2.611662e-002, 3.410133e-002, 2.708515e-002, 4.570573e-003, 1.188491e-002, 2.912567e-002, 2.911908e-002, 1.042586e-002, -4.037856e-004, -3.517459e-003, -9.239520e-003, -1.198800e-002, -1.362311e-002, -1.345489e-002, -7.137528e-003, -4.919561e-003, -1.485976e-003, -2.221363e-004, 1.361422e-003, 2.392983e-003, -1.225868e-003, -3.335477e-003, 2.403111e-003, 1.404877e-002, 1.411287e-002, 1.320819e-002, 4.655916e-003, 3.234035e-003, -8.347254e-003, -8.148914e-003, -1.339578e-002, -6.608255e-003, 7.275687e-003, -4.935353e-003, -1.652788e-002, -1.501708e-002, -1.189090e-002, -1.201044e-002, -3.089756e-002, -1.748384e-002, 9.986710e-003, 6.217352e-003, -1.484641e-002, -1.366575e-002, -7.147906e-003, 4.238509e-003, 2.115527e-002, 2.551627e-002, 2.514597e-003, -2.631000e-002, -2.567391e-002, -8.898684e-004, 4.713967e-003, -9.792592e-003, -2.030864e-002, -2.743150e-002, -3.078684e-002, -3.414689e-002, -3.055617e-002, -2.444987e-002, -1.705626e-002, -1.199255e-002, -8.134532e-003, -5.267649e-003, -3.942310e-003, -4.684194e-003, -3.598747e-003, 8.252660e-004, 6.803110e-003, 9.850097e-003, -4.753293e-004, -1.121988e-003, 3.855630e-002, 4.562514e-002, 3.482076e-002, 2.814268e-002, 9.401603e-003, 6.084959e-003, 1.579140e-002, -1.050485e-003, -1.085616e-002, -5.321863e-003, 1.522050e-002, 1.865800e-002, 4.212538e-003},
{-1.303191e-002, -6.865530e-003, -7.726652e-003, 4.768784e-003, 5.663703e-003, 2.532620e-003, 6.871025e-003, 2.397739e-002, 2.483309e-002, 8.511943e-003, -1.703541e-003, -6.225991e-004, 7.542082e-003, 1.186643e-002, 1.141914e-002, 1.050198e-002, 1.095984e-002, 8.536335e-003, 4.296434e-003, 1.174687e-003, -5.320543e-003, -8.058156e-003, -1.158994e-002, -1.521483e-002, -1.875093e-002, -1.449674e-002, -6.636822e-003, 1.597721e-003, 2.260871e-003, 6.823337e-004, -3.040830e-003, -6.876727e-003, -1.887953e-002, -2.141120e-002, -1.384250e-002, -1.593754e-003, 9.933511e-003, 6.841741e-003, 1.566404e-002, 3.043652e-002, 2.640195e-002, 2.071212e-002, 2.202354e-002, 5.722181e-003, -1.144802e-002, -3.438234e-002, -2.897925e-002, -1.372864e-002, -7.331117e-003, -6.961144e-004, -9.047327e-003, -1.137337e-002, 4.870445e-003, 1.330673e-002, -3.384333e-004, -1.524035e-002, -1.287862e-002, -1.492990e-002, -1.611533e-002, -1.111217e-002, -6.434898e-003, -4.055053e-003, 9.199121e-004, 1.261347e-003, 1.533506e-003, 6.754583e-003, 7.912374e-003, 6.964876e-003, 7.705336e-003, 2.222906e-003, -7.029765e-003, -9.357158e-003, -6.942605e-003, -2.003324e-003, 3.748272e-003, 5.436726e-003, 7.621405e-003, 8.565581e-003, 2.204108e-003, -9.689471e-003, -1.649851e-002, -1.042493e-002, 4.222311e-003, 6.716019e-003, 8.053162e-003, 7.406820e-003, 2.383207e-003, -8.478699e-003, -1.431030e-002, -1.140515e-002, -1.209422e-002, -3.796420e-002, -1.953956e-002, 3.358368e-003, 7.771711e-003, 3.367884e-003, -6.100214e-003, 6.039178e-003, 1.572119e-002, 7.735550e-003, 6.470140e-003, 1.037145e-002, 3.937527e-003, -5.202283e-003, -5.951885e-003, 5.371631e-004, 2.385277e-003, 2.079729e-003, 5.685908e-003, 8.015830e-003, 9.070294e-003, 1.391204e-002, 1.574320e-002, 1.352036e-002, 1.479593e-002, 6.372255e-003, -2.973818e-003, -7.524755e-003, -1.047964e-002, -9.306112e-003, -5.386744e-003, -6.902816e-003, -1.139448e-002, -1.275785e-003, 8.403980e-003, 9.596690e-003, 3.546363e-003, -2.015887e-003, 7.770460e-003, 1.733957e-002, 2.349638e-002, 2.161776e-002, 1.091541e-002, 2.885772e-003, -7.611183e-003, -4.023608e-003, 1.216722e-003, -2.469103e-002, -8.225621e-003, 1.161693e-002, 5.688934e-003, 1.979349e-003, -3.604718e-004, 6.788729e-003, 2.410956e-003, 3.908485e-003, 2.073837e-002, 1.541526e-002, 6.790191e-003, 1.448906e-003, 4.418489e-003, 1.869086e-003, -4.721921e-003, -3.964913e-003, -2.999823e-003, -8.685070e-004, 2.737969e-003, 8.340222e-003, 1.215220e-002, 1.846326e-002, 1.875542e-002, 1.439434e-002, 3.783814e-003, -2.700532e-003, -8.236123e-003, -1.156086e-002, -1.370619e-002, -1.267713e-002, -2.268101e-002, -2.957730e-002, -2.079996e-002, -1.390495e-003, 5.273850e-003, 8.083294e-004, 2.306481e-003, 8.242966e-003,

© ISO/IEC 2004 — All rights reserved


Copyright International Organization for Standardization
Provided by IHS under license with ISO
No reproduction or networking permitted without license from IHS
Not for Resale

1.630562e-002, 2.137812e-002, 8.920493e-003, -2.393403e-003, -5.451095e-003, -4.978789e-003, 9.675371e-003, -1.226148e-002, 6.166756e-004, 1.045076e-002, 2.458099e-003, 1.430631e-003, 2.631022e-003, 4.826033e-004, -7.461847e-003, 1.453541e-002, 2.455306e-002, 1.472246e-002, 8.168375e-003, 1.326990e-002, 2.181889e-003, -8.712016e-003, -1.552418e-002, -1.317093e-002, -3.926296e-003, -1.682719e-003, 3.106835e-004, 4.878686e-003, 1.401814e-002, 2.175962e-002, 2.301441e-002, 2.082251e-002, 1.295486e-002, 2.620865e-003, -4.798848e-003, -1.191821e-002, -1.957979e-002, -1.669989e-002, -1.619274e-002, -2.903142e-002, -3.429580e-002, -2.829492e-002, -1.028937e-002, -3.022171e-003, -1.345053e-003, -3.213336e-003, -5.312566e-003, 2.140258e-003, 3.019230e-003, -1.401069e-002, -1.093846e-002, -8.899257e-003, 6.472959e-003, -3.351892e-003, -5.471842e-004, 6.730622e-003, 1.535046e-003, 8.262074e-003, -1.206680e-003, -1.807633e-002, 2.000627e-003, 2.102354e-002, 9.181422e-003, 8.279025e-004, 9.956881e-003, 7.606663e-003, -6.871116e-003, -1.967958e-002, -1.943191e-002, -1.078515e-002, -4.601453e-003, 1.870141e-003, 4.677144e-003, 7.899511e-003, 2.088090e-002, 3.342161e-002, 4.385657e-002, 4.627663e-002, 3.930000e-002, 2.712576e-002, 7.443151e-003, -1.132070e-002, -2.144361e-002, -2.221203e-002, -1.063913e-002, -5.542953e-003, -1.673900e-002, -2.189553e-002, -1.753781e-002, -1.500428e-003, -3.730506e-003, 3.532410e-003, -2.450409e-003, -1.329699e-002, -2.246949e-003, -1.729671e-002, -1.468150e-002, -8.179557e-003, 1.820574e-003, -4.093156e-003, -1.860302e-003, 7.394739e-003, 6.150785e-003, 6.699636e-003, -1.065158e-002, -1.061888e-002, 1.225606e-002, 1.525216e-002, -2.653028e-003, 3.014488e-003, 1.668876e-002, 8.643767e-003, -3.059283e-003, -1.223150e-002, -1.237234e-002, -5.322356e-003, 1.524440e-003, 5.863594e-003, 4.152933e-003, 1.050980e-002, 2.126192e-002, 4.062353e-002, 5.653528e-002, 6.025145e-002, 5.308968e-002, 3.211250e-002, 3.822998e-003, -1.849518e-002, -3.255998e-002, -3.981278e-002, -3.012099e-002, -7.562613e-003, 3.846420e-003, -1.462660e-003, -4.049138e-003, 6.891767e-003, 3.041750e-003, 1.432380e-003, 3.434682e-003, -5.752642e-003, -3.538440e-003, -1.240053e-002, -2.516152e-002, -9.266919e-003, -1.758443e-003, -6.187369e-003, -4.781612e-004, 1.006806e-002, 4.405117e-003, 1.902122e-003, -1.225018e-002, 4.538562e-003, 1.287716e-002, -4.025169e-003, -9.752411e-003, 1.323099e-002, 2.350950e-002, 1.494659e-002, 2.952610e-003, -3.789249e-003, -5.067498e-003, 1.709178e-003, 8.435732e-003, 4.544669e-003, -3.352416e-003, -1.322520e-004, 7.693362e-003, 2.832360e-002, 4.688727e-002, 5.503319e-002, 4.062826e-002, 1.876268e-002, -1.055603e-002, -3.739533e-002, -5.623564e-002, -6.679239e-002, -6.304802e-002, -3.664111e-002, -6.290269e-003, 9.425564e-003, 1.278882e-002, 1.965340e-002, 1.597776e-002, -7.337440e-004, 3.159187e-003, 6.158004e-003, 6.737262e-003, -1.462529e-003, -2.658468e-002, -1.230451e-002, -1.066925e-003, -4.631928e-003, -5.163282e-004, 1.155876e-002, 1.287673e-003, 5.103756e-003, -2.416410e-003, 6.415470e-003, 2.153188e-003, -1.633140e-002, -1.753946e-003, 2.035121e-002, 2.499008e-002, 1.309644e-002, 4.464728e-003, 2.573705e-003, 7.696776e-003, 1.380698e-002, 1.539591e-002, 2.647233e-003, -1.717850e-002, -2.044236e-002, -1.146387e-002, 7.492198e-003, 2.567686e-002, 3.156267e-002, 1.647041e-002, -6.703640e-003, -3.177164e-002, -5.813933e-002, -7.538254e-002, -8.592685e-002, -8.718103e-002, -6.883205e-002, -3.214386e-002, -2.703291e-003, 1.428934e-002, 2.411827e-002, 2.300483e-002, 5.644384e-003, -8.665550e-003, 1.853689e-003, 1.439752e-002, 1.100506e-002, -2.229093e-002, -1.334583e-002, 1.300975e-003, -4.947812e-003, -4.649565e-003, 1.308619e-002, 4.734085e-003, 1.840212e-002, 6.672493e-004, 2.841931e-003, -1.249156e-002, -9.764832e-003, 1.000882e-002, 2.129026e-002, 1.957985e-002, 6.888311e-003, 5.255327e-003, 1.336540e-002, 3.037234e-002, 3.128384e-002, 1.544301e-002, -5.309828e-003, -2.494254e-002, -3.077071e-002, -2.005798e-002, -3.551189e-003, 9.678080e-003, 1.235543e-002, -1.584486e-003, -1.947820e-002, -4.290957e-002, -6.010285e-002, -7.214900e-002, -7.594954e-002, -7.706059e-002, -6.952535e-002, -3.925415e-002, -1.150931e-002, 5.796002e-003, 2.004599e-002, 2.555347e-002, 1.270261e-002, -7.413043e-003, -1.443034e-002, 9.477643e-003, 1.415931e-002, -8.782980e-003, -9.942047e-003, -2.090203e-003, -3.223282e-003, -1.054787e-002, -1.262365e-002, 1.394961e-002, 2.821031e-002, 1.046173e-004, -1.255857e-002, -9.293129e-003, 2.602196e-003, 8.224931e-003, 1.385827e-002, 9.783970e-003, 4.303418e-003, 1.343883e-002, 3.279411e-002, 4.324811e-002, 3.465465e-002, 1.560566e-002, -5.619857e-003, -2.040058e-002, -2.359650e-002, -1.649657e-002, -4.998289e-003, 3.939408e-003, 7.540763e-003, -2.779827e-003, -1.396048e-002, -2.967252e-002, -3.792320e-002, -4.009712e-002, -3.826744e-002, -3.465625e-002, -2.807025e-002, -9.602303e-003, 6.889496e-003, 1.682353e-002, 1.668338e-002, 2.904222e-002, 1.898341e-002, 6.024330e-004, -1.508578e-002, -4.068719e-003, 1.830369e-002, 3.203919e-003, -1.511821e-004, 7.110894e-004, -1.307809e-003, -1.364339e-002, -1.250990e-002, 1.718241e-002, 2.588284e-002, -1.107080e-002, -2.180043e-002, -3.226933e-003, 5.821975e-003, 5.673054e-003, 8.024817e-003, 2.228418e-003, 5.014932e-003, 2.664342e-002, 4.413859e-002, 3.946400e-002, 2.694811e-002, 1.246563e-002, -7.321625e-003, -2.023585e-002, -2.015397e-002, -9.189052e-003, 2.136499e-003, 1.119620e-002, 1.348626e-002, 8.942760e-003, 3.077612e-003, -6.832074e-003, -1.088688e-002, -7.015237e-003, -2.251729e-003, 6.306942e-003, 1.746298e-002, 3.499844e-002, 4.336567e-002, 4.354251e-002, 2.838025e-002, 2.014628e-002, 2.023871e-002, 7.990441e-003, -9.627047e-003, -1.158187e-002, 9.905092e-003, 5.246699e-003, 7.104580e-003, 1.058282e-002, 5.306832e-003, -5.876523e-003, -6.194963e-003, 9.262125e-003, 1.250831e-003, -2.347227e-002, -1.203553e-002, 9.032876e-003, 4.890189e-003, -


© ISO/IEC 2004 — All rights reserved

Copyright International Organization for Standardization
Provided by IHS under license with ISO
No reproduction or networking permitted without license from IHS
Not for Resale

2.909018e-003, 1.451281e-003, -5.056966e-003, 7.867002e-003, 3.134715e-002, 4.040863e-002, 2.815174e-002, 1.212620e-002, -3.150169e-004, -1.814093e-002, -2.617535e-002, -2.060212e-002, -3.443736e-003, 9.402480e-003, 1.675863e-002, 1.904634e-002, 1.688027e-002, 9.663044e-003, 5.642999e-003, 1.046337e-003, 5.495519e-003, 1.525601e-002, 2.629264e-002, 4.332111e-002, 5.848435e-002, 6.660968e-002, 6.024422e-002, 3.841752e-002, 1.043415e-002, 1.010766e-002, 9.590450e-003, 5.592731e-003, -7.545000e-003, -8.141935e-004, 1.984055e-004, 1.240091e-002, 2.357856e-002, 1.886123e-002, 2.343062e-003, -2.481027e-003, -1.608288e-003, -7.906250e-003, -1.895822e-002, 1.292310e-003, 1.433361e-002, -2.004745e-003, -1.024542e-002, -8.054751e-003, -1.038235e-002, 7.757116e-003, 2.940154e-002, 3.000028e-002, 1.341952e-002, 1.228488e-003, -1.260834e-002, -2.522832e-002, -2.780803e-002, -1.779015e-002, -1.640775e-003, 1.409057e-002, 1.774141e-002, 1.927345e-002, 1.515950e-002, 6.153957e-003, 1.022680e-002, 4.196238e-003, 2.608019e-003, 1.093593e-002, 2.185430e-002, 3.695033e-002, 5.498680e-002, 6.531816e-002, 6.108090e-002, 4.165150e-002, 6.434840e-003, -4.673877e-003, 3.343229e-003, 8.583838e-003, 1.445766e-003, -4.633807e-003, -7.718865e-003, 1.263772e-002, 2.655917e-002, 2.536168e-002, 8.790223e-003, -6.551867e-003, -8.083552e-003, -1.615431e-002, -6.320353e-003, 8.423594e-003, 9.323992e-003, -1.166254e-002, -1.371246e-002, -8.089580e-003, -1.097989e-002, 2.820966e-003, 1.659807e-002, 1.218129e-002, 1.591953e-003, -8.113644e-003, -1.683878e-002, -2.053983e-002, -2.262423e-002, -1.467748e-002, 6.159105e-004, 1.139219e-002, 1.716557e-002, 1.956506e-002, 1.132103e-002, 4.481235e-003, 5.761122e-003, -1.223989e-004, -3.245161e-003, 1.501682e-003, 6.414250e-003, 1.297258e-002, 3.050765e-002, 4.497367e-002, 4.810052e-002, 3.547730e-002, 4.001047e-003, -1.809252e-002, -8.587737e-003, 7.112198e-003, 5.725490e-003, 6.089745e-004, -1.176106e-002, -3.886486e-003, 2.410497e-002, 2.112765e-002, 4.581109e-003, -1.067193e-002, -1.057847e-002, -1.533847e-002, 5.554492e-003, 1.560750e-002, -2.074897e-004, -1.505679e-002, -1.152469e-002, -8.803627e-003, -1.678243e-002, -5.758196e-003, 3.553825e-003, 1.641633e-003, -3.773305e-003, -9.320496e-003, -8.001104e-003, -5.263320e-003, -5.132126e-003, 2.555435e-003, 8.724459e-003, 1.286137e-002, 1.610789e-002, 1.783986e-002, 1.148145e-002, 7.595145e-003, 7.797577e-003, 7.336763e-003, 4.120999e-003, 1.572913e-003, -1.652488e-003, -7.661030e-003, -2.416387e-003, 1.175009e-002, 1.938231e-002, 2.009363e-002, -8.227952e-004, -2.425095e-002, -1.427425e-002, -2.116165e-004, 2.169849e-003, 1.079906e-002, -7.842071e-003, -3.503626e-003, 1.841549e-002, 1.000355e-002, 2.645581e-003, -7.068667e-003, -1.503235e-002, -1.397458e-002, 1.314370e-002, 1.876335e-002, -9.167476e-003, -1.308891e-002, -6.386806e-003, -9.654602e-003, -2.201140e-002, -1.943901e-002, -1.944758e-002, -2.322590e-002, -1.689492e-002, -1.184628e-002, 2.847130e-003, 1.473697e-002, 2.060921e-002, 2.293037e-002, 1.999011e-002, 2.175583e-002, 2.132798e-002, 1.880921e-002, 2.073707e-002, 2.171123e-002, 2.260574e-002, 2.257506e-002, 2.189768e-002, 1.353560e-002, -3.261979e-003, -2.128564e-002, -3.181895e-002, -3.023040e-002, -2.312805e-002, -8.348804e-003, -1.144177e-002, -2.667758e-002, -1.230879e-002, 2.314596e-005, -1.476231e-003, 1.315514e-002, -2.946488e-003, 4.487516e-004, 1.207851e-002, 2.236145e-003, 9.053946e-003, 1.062180e-003, -1.588395e-002, -1.373528e-002, 1.351908e-002, 1.926118e-002, -1.434259e-002, -7.958395e-003, -1.664726e-003, -1.160975e-002, -2.674699e-002, -4.446668e-002, -5.963218e-002, -6.234485e-002, -5.031150e-002, -3.168944e-002, -5.629273e-003, 2.163382e-002, 3.817724e-002, 4.048520e-002, 3.367609e-002, 3.078477e-002, 2.686570e-002, 2.302704e-002, 2.886943e-002, 3.712076e-002, 4.218345e-002, 4.390913e-002, 3.817337e-002, 1.773970e-002, -1.813709e-002, -5.243476e-002, -7.454739e-002, -8.067904e-002, -6.975421e-002, -4.643545e-002, -2.794202e-002, -2.162076e-002, -5.203590e-003, 4.453161e-003, -6.346927e-003, 9.312703e-003, 4.217047e-003, 9.953519e-004, 9.157712e-003, -5.930820e-004, 1.692688e-002, 9.602671e-003, -8.335150e-003, -9.474637e-003, 1.297694e-002, 1.488582e-002, -1.790979e-002, -2.711252e-003, 2.107230e-003, -1.666560e-002, -3.451518e-002, -5.962499e-002, -7.802225e-002, -7.937675e-002, -6.336892e-002, -4.026398e-002, -1.550642e-002, 9.340614e-003, 3.281426e-002, 3.410346e-002, 2.720073e-002, 1.939562e-002, 9.607447e-003, 5.621596e-003, 9.771518e-003, 2.534425e-002, 4.140278e-002, 4.185092e-002, 2.960192e-002, 1.446599e-002, -1.233320e-002, -3.906822e-002, -5.857853e-002, -6.935369e-002, -7.234343e-002, -6.647744e-002, -4.388175e-002, -1.521827e-002, 1.212367e-002, 1.477541e-002, -9.492641e-003, 2.529025e-003, 1.071094e-002, -1.106102e-003, 6.804341e-003, -2.004354e-003, 2.173880e-002, 1.235419e-002, -5.160882e-003, -6.206928e-003, 6.962696e-003, 3.315017e-003, -2.124717e-002, 7.945702e-004, 5.188272e-003, -1.015648e-002, -1.084796e-002, -2.897181e-002, -3.764453e-002, -2.997370e-002, -1.356445e-002, 6.388772e-003, 2.323747e-002, 3.614152e-002, 3.684218e-002, 2.283497e-002, -5.789946e-003, -3.156294e-002, -4.699693e-002, -5.272672e-002, -4.529177e-002, -2.510538e-002, 7.704621e-003, 2.310298e-002, 2.918485e-002, 4.131002e-002, 3.864386e-002, 3.060647e-002, 1.148042e-002, -5.533127e-003, -1.217465e-002, -2.754262e-002, -2.822023e-002, -1.039337e-002, 2.355472e-002, 1.754584e-002, -1.053409e-002, 7.400023e-004, 7.670373e-003, -1.011112e-002, 3.622482e-003, -5.454121e-003, 1.813361e-002, 1.040534e-002, -5.167881e-003, -5.968861e-003, 4.839031e-003, -3.200893e-003, -2.056636e-002, 5.534609e-003, 3.765951e-003, 1.079519e-002, 1.423354e-002, -1.120828e-002, -2.903439e-002, -2.883017e-002, -2.189317e-002, -1.525860e-002, -1.422423e-004, 2.906012e-002, 4.978880e-002, 3.595330e-002, -1.086308e-002, -6.317913e-002, -9.294823e-002, -1.033564e-001, -

© ISO/IEC 2004 — All rights reserved


Copyright International Organization for Standardization
Provided by IHS under license with ISO
No reproduction or networking permitted without license from IHS
Not for Resale

9.561724e-002, -5.619168e-002, -7.603213e-003, 1.397151e-002, 1.976506e-002, 1.551919e-002, -5.882148e-004, -2.435601e-002, -3.767600e-002, -5.060978e-002, -4.295454e-002, -1.836427e-002, 2.909033e-003, 8.119092e-003, 2.638386e-002, 1.988083e-002, -9.076848e-003, -1.910248e-004, 5.360240e-003, -1.502095e-002, 1.457767e-003, -7.292848e-003, -2.588266e-003, 4.334732e-003, 1.443704e-003, -2.390381e-003, 4.141515e-003, -4.401152e-003, -2.081715e-002, 7.769898e-003, 3.482518e-003, 1.127763e-002, 1.770184e-002, -1.154609e-002, -1.397098e-002, 2.030403e-003, 5.538007e-003, -3.397004e-003, -2.453863e-003, 1.522881e-002, 3.490555e-002, 4.547517e-002, 1.146929e-002, -4.805221e-002, -8.230854e-002, -9.325952e-002, -7.847555e-002, -2.722860e-002, 2.132544e-002, 3.488717e-002, 3.807111e-002, 2.755528e-002, 1.215968e-002, 4.740688e-003, -9.280099e-004, -2.799585e-002, -5.038468e-002, -4.500682e-002, -9.978348e-003, 1.286896e-002, 1.690982e-002, 1.106663e-002, -1.075060e-002, 1.504110e-004, 4.652862e-003, -1.707225e-002, 1.657218e-004, -7.822659e-003, -1.342373e-002, -1.806963e-003, 1.154903e-002, 1.135888e-002, 7.826588e-003, 3.871218e-003, -1.061350e-002, 1.363569e-002, -7.161790e-003, -2.489085e-003, 1.428592e-002, 1.030686e-002, 1.791374e-002, 1.320711e-002, 4.150862e-003, -2.298791e-002, -4.040425e-002, -2.370519e-002, 2.394461e-002, 4.450146e-002, 4.261855e-002, 9.114467e-003, -9.800267e-003, -1.534997e-002, -4.224769e-003, 3.788958e-002, 6.092390e-002, 4.929129e-002, 2.290758e-002, -1.011258e-003, 4.101076e-003, 2.162453e-002, 3.811408e-002, 3.422958e-002, 5.419525e-003, -2.175265e-002, -1.552736e-002, -3.374554e-003, -7.833574e-003, -8.608932e-003, -1.620082e-002, 3.601424e-003, 5.571431e-003, -9.690279e-003, -3.271577e-003, -8.313304e-003, -1.910413e-002, -4.666174e-003, 1.613878e-002, 1.582514e-002, 9.806995e-003, 5.784232e-003, -7.831028e-003, 1.199487e-002, -1.309734e-002, -6.727422e-003, 1.522764e-002, 1.018145e-002, -1.307716e-002, -5.651691e-002, -4.035440e-002, -5.432043e-002, -9.728485e-002, -1.083031e-001, -4.251116e-002, 5.188912e-003, 3.170222e-002, 4.311754e-002, 5.125556e-002, 4.997231e-002, 5.512213e-002, 7.350689e-002, 4.060833e-002, 6.010604e-003, -4.795976e-002, -5.681659e-002, -4.660228e-002, -2.487146e-002, -3.374260e-002, -3.655761e-003, 1.962215e-002, 1.676999e-003, -2.955046e-003, 4.647633e-004, -2.251986e-002, -9.977607e-003, -4.440369e-003, 7.653636e-003, 5.578753e-003, -6.154211e-003, 1.169799e-003, -1.608145e-002, -9.281431e-003, -3.682545e-004, 1.040816e-002, 1.670115e-003, -6.137337e-003, -1.517831e-003, -8.439759e-003, 4.102449e-003, -1.367607e-002, 5.221520e-003, 1.013366e-002, -9.860409e-003, -3.299476e-002, -4.209147e-002, -1.116884e-002, -1.866097e-002, -6.263366e-002, -7.712913e-002, -4.975502e-002, -1.023231e-002, 1.673977e-002, 5.962736e-002, 5.648898e-002, 4.489487e-002, 5.596946e-002, 7.625028e-002, 3.048495e-002, -6.045107e-003, -3.571399e-002, -3.239948e-002, -7.004771e-003, 5.940778e-003, -2.716453e-002, -2.861543e-002, -2.532912e-003, 4.323165e-003, 1.769198e-002, 2.114201e-002, -2.089705e-002, -4.373749e-003, 5.452979e-004, 4.772809e-003, -6.119599e-003, -7.370454e-003, 5.013375e-003, -2.059804e-002, -1.456005e-002, 1.794116e-003, 5.000583e-003, -1.104375e-002, -1.966122e-002, -7.735107e-003, 1.464304e-003, 8.424133e-003, -2.623757e-004, 2.554756e-002, 8.416080e-003, -1.320082e-002, -1.235666e-002, 7.625538e-003, 2.280683e-002, 1.516729e-002, 1.107520e-003, -4.221476e-003, -5.243686e-003, -2.610004e-003, 2.113014e-002, 5.075109e-002, 3.621268e-002, 2.040688e-002, 2.813712e-002, 5.993652e-002, 5.178760e-002, 2.577499e-002, 2.008010e-002, 2.340151e-002, 2.166354e-002, 2.816009e-002, 2.015387e-002, -1.872485e-003, -8.580427e-003, -4.987479e-003, 2.294062e-002, 2.954564e-002, -1.434443e-002, 9.977847e-004, 2.776187e-003, 4.022179e-003, -2.680161e-003, -5.350093e-003, -3.364127e-003, -2.184188e-002, -1.473709e-002, -1.229516e-003, -8.148078e-003, -1.645642e-002, -1.477566e-002, 6.071842e-004, 1.185208e-002, 1.041539e-002, 7.256296e-003, 3.550938e-002, 1.435878e-002, -1.200305e-002, -1.437201e-002, 1.167192e-002, 3.838214e-002, 4.382920e-002, 3.537363e-002, 3.207457e-002, 2.605196e-002, 1.736650e-002, 2.383082e-002, 2.908908e-002, 1.828330e-002, 7.525205e-003, 1.385268e-002, 3.727699e-002, 6.238337e-002, 5.438126e-002, 4.695508e-002, 4.258560e-002, 4.149572e-002, 3.660482e-002, 1.590993e-002, -1.161019e-002, -2.767629e-002, -1.882548e-002, 1.951345e-002, 2.597164e-002, -1.563189e-002, -3.999467e-003, 6.937379e-003, 1.152848e-002, 6.170299e-004, -5.035875e-003, -6.040793e-003, -2.311203e-002, -8.895446e-003, -2.685060e-003, -5.334863e-003, -4.769209e-003, -2.472053e-003, 1.330771e-002, 1.796929e-002, 9.343485e-003, 4.699567e-003, 3.300972e-002, 1.911243e-002, -8.684496e-003, -1.710887e-002, 8.250168e-003, 3.619769e-002, 4.573495e-002, 4.623164e-002, 4.549288e-002, 3.946143e-002, 3.049942e-002, 1.787717e-002, 1.557448e-002, 7.644239e-004, -4.343347e-003, 3.498523e-003, 1.783819e-002, 4.474142e-002, 6.380076e-002, 5.756124e-002, 4.454867e-002, 3.556704e-002, 2.129649e-002, 8.290109e-004, -2.059359e-002, -3.592851e-002, -2.329132e-002, 1.822657e-002, 1.943800e-002, -1.657067e-002, -6.784823e-003, 1.590848e-002, 1.196220e-002, 4.251125e-004, -7.557747e-003, -3.084654e-003, -2.414134e-002, -7.774151e-003, -4.715275e-003, -2.540431e-003, 4.842912e-003, 6.842884e-003, 2.238383e-002, 1.753188e-002, 2.381252e-003, 1.420837e-003, 1.840784e-002, 1.685706e-002, -2.806527e-003, -1.055510e-002, 6.219740e-003, 3.053127e-002, 4.191287e-002, 4.508569e-002, 4.460892e-002, 4.065779e-002, 2.306414e-002, 1.239951e-002, 1.572746e-003, -1.135098e-002, -1.421947e-002, -8.132109e-003, 1.188471e-003, 2.296505e-002, 4.145478e-002, 5.192415e-002, 4.108921e-002, 2.624607e-002, 1.398673e-002, -1.501707e-003, -1.924538e-002, -3.333777e-002, -2.281335e-002, 4.741578e-003, 5.353535e-003, -1.488940e-002, 2.929332e-003,


© ISO/IEC 2004 — All rights reserved

Copyright International Organization for Standardization
Provided by IHS under license with ISO
No reproduction or networking permitted without license from IHS
Not for Resale

1.800744e-002, 1.033472e-002, -2.851290e-005, -3.613872e-003, -2.966350e-003, -9.266570e-003, -2.785057e-003, -7.517984e-003, 7.265423e-003, 7.349505e-003, 4.152424e-003, 2.335401e-002, 1.125744e-002, -2.903718e-003, -4.063119e-003, 6.249884e-003, 1.951909e-003, -3.202015e-003, -7.951040e-003, 6.964949e-003, 1.932849e-002, 2.902148e-002, 3.159585e-002, 2.574342e-002, 1.080665e-002, 2.315812e-003, 2.857951e-004, -1.015705e-002, -1.735701e-002, -1.540024e-002, -1.646569e-002, -1.261543e-002, -1.232851e-003, 1.643664e-002, 2.588485e-002, 2.782091e-002, 2.398727e-002, 1.622701e-002, 3.450264e-003, -1.260653e-002, -2.457864e-002, -2.058116e-002, -9.270347e-003, -4.260019e-003, -1.212219e-002, 4.339565e-003, 1.725829e-002, 7.900026e-003, 6.973809e-004, 7.651241e-003, 5.737485e-004, -8.265203e-003, -1.992892e-004, -8.678558e-003, 1.275004e-002, 6.525666e-003, 2.297156e-003, 1.835662e-002, -7.691851e-004, -1.050744e-002, -1.000576e-002, -7.394295e-003, -1.130775e-002, -1.721241e-002, -1.459074e-002, -1.385860e-003, 6.024277e-003, 7.936281e-003, 4.865968e-003, -2.652427e-003, -1.220073e-002, -1.566077e-002, -1.305223e-002, -7.063473e-003, -7.853580e-003, -2.921024e-003, -5.654955e-003, -9.495858e-003, -1.272938e-002, -7.367230e-003, 4.326652e-003, 1.148896e-002, 1.532629e-002, 1.307278e-002, 6.251387e-003, -7.316360e-003, -2.200750e-002, -2.790922e-002, -2.022079e-002, -1.313887e-002, -8.579823e-003, 7.211000e-003, 8.361931e-003, -2.118402e-003, -2.149506e-003, 1.517625e-002, 2.077706e-003, -1.273821e-002, -1.805438e-003, -1.681289e-002, 6.792310e-003, -1.069751e-003, -1.275935e-004, 1.281481e-002, -1.416080e-002, -1.662041e-002, -1.487594e-002, -2.225378e-002, -2.578577e-002, -2.819883e-002, -3.011745e-002, -2.021931e-002, -9.542206e-003, -5.901519e-003, -1.010888e-002, -2.501994e-002, -4.487440e-002, -3.860627e-002, -1.396114e-002, 6.877159e-003, 6.579962e-003, 1.112912e-002, 8.417035e-003, 7.648990e-003, -3.310187e-003, -3.214177e-002, -2.983776e-002, -1.429761e-002, -6.951103e-003, -6.111945e-003, -9.251636e-003, -1.957214e-002, -3.250013e-002, -3.537773e-002, -2.957399e-002, -2.007279e-002, -9.237220e-003, 3.917073e-003, -5.524976e-003, -1.095648e-002, -8.987139e-003, 1.295587e-002, 3.167406e-003, -1.824089e-002, -3.626794e-003, -2.345803e-002, -9.283737e-003, -1.200857e-002, -1.113970e-002, 4.667736e-003, -1.862801e-002, -1.751344e-002, -1.121618e-002, -2.681706e-002, -3.709663e-002, -4.001500e-002, -4.029921e-002, -3.252619e-002, -2.242706e-002, -1.696221e-002, -2.117203e-002, -5.163937e-002, -8.039809e-002, -5.295723e-002, -2.179982e-002, -1.203384e-003, 8.428738e-003, 1.997485e-002, 1.013021e-002, 3.468877e-003, -1.249294e-002, -4.048084e-002, -5.967099e-002, -4.313564e-002, -2.642539e-002, -2.209272e-002, -2.591307e-002, -2.993865e-002, -3.235598e-002, -3.427636e-002, -2.927515e-002, -2.063721e-002, -3.745150e-003, 4.795101e-003, -1.811047e-002, -1.361431e-002, -5.654006e-003, 8.166540e-003, 1.074668e-004, -4.112591e-003, 9.927887e-005, -2.124370e-002, -1.612695e-002, -1.673170e-002, -1.753495e-002, -2.117964e-004, -1.559992e-002, -1.618667e-002, -5.705686e-003, -2.100882e-002, -3.415884e-002, -3.985929e-002, -3.866520e-002, -3.119432e-002, -2.011409e-002, -1.137603e-002, -2.309431e-002, -5.831530e-002, -7.318049e-002, -3.910827e-002, -1.291184e-002, -1.305214e-002, 5.823383e-003, 2.768461e-002, 2.491354e-002, 1.256695e-002, -1.146600e-002, -3.813363e-002, -6.286424e-002, -5.105445e-002, -2.727973e-002, -1.891822e-002, -2.102291e-002, -2.346929e-002, -2.311797e-002, -2.555474e-002, -2.196819e-002, -1.614292e-002, -1.067570e-003, 4.779692e-003, -1.653468e-002, -1.072955e-002, -3.389901e-003, 7.598759e-004, 2.309640e-003, 7.317499e-003, 9.650284e-003, -2.056479e-002, -1.225977e-002, -1.200395e-002, -1.132091e-002, -2.822186e-003, -1.530778e-002, -1.297292e-002, -1.260030e-003, -1.282526e-002, -2.609007e-002, -2.867280e-002, -2.334881e-002, -1.153855e-002, 2.334960e-003, 5.850574e-003, -2.098211e-002, -4.913913e-002, -4.730502e-002, -1.770348e-002, -7.191405e-003, 4.339105e-003, 3.519490e-002, 4.279668e-002, 3.213303e-002, 1.413703e-002, -8.979505e-003, -3.411147e-002, -4.494326e-002, -4.086798e-002, -2.033612e-002, -3.695954e-003, -7.496185e-004, -2.725016e-003, -5.977443e-003, -1.571856e-002, -1.322880e-002, -5.619868e-003, -6.371187e-003, -8.206933e-003, -1.180715e-002, -1.023860e-002, -5.274080e-003, -2.094698e-003, 6.402615e-003, 2.247810e-002, 2.193980e-002, -9.134808e-003, -7.377290e-003, -7.731485e-003, -9.289826e-003, -3.990879e-003, -1.547182e-002, -6.562620e-003, -1.146415e-003, -1.207183e-002, -1.839641e-002, -1.704453e-002, -7.853461e-003, 7.717155e-003, 2.010592e-002, 1.729039e-002, -6.689889e-003, -1.969471e-002, -1.899895e-002, -1.754437e-002, -1.994964e-002, 4.310121e-004, 2.122034e-002, 1.995327e-002, 2.406544e-003, -2.719220e-002, -3.978834e-002, -3.693591e-002, -2.087787e-002, -1.357715e-002, -4.136780e-003, 7.172884e-003, 1.507746e-002, 1.440828e-002, 7.399424e-003, -6.765649e-003, -6.743872e-003, -1.200380e-003, -8.467820e-003, -8.691828e-003, -5.851217e-003, -5.894169e-003, -9.394245e-003, -6.109702e-004, 4.780309e-003, 3.192759e-002, 3.438075e-002, 2.527347e-003, -1.319923e-003, 1.739416e-003, -1.170993e-003, 1.158146e-003, -5.901427e-003, 4.886569e-003, 1.930664e-003, -1.025848e-002, -1.459428e-002, -9.425328e-003, 2.543962e-003, 2.049413e-002, 3.342093e-002, 3.166881e-002, 1.430608e-002, 4.479599e-003, -5.742292e-003, -1.222779e-002, -1.290371e-002, -2.983424e-003, -1.246711e-003, -9.351893e-003, -2.087063e-002, -3.434857e-002, -3.397313e-002, -2.091692e-002, -5.588037e-004, 1.175351e-002, 2.101346e-002, 2.644722e-002, 2.829957e-002, 2.463296e-002, 1.572237e-002, -1.050012e-003, -7.037127e-004, 3.229193e-003, -6.571643e-003, 2.686181e-003, 1.288397e-002, 3.632381e-003, -2.608617e-003, 2.165966e-003, 4.592102e-003, 3.945507e-002, 3.472405e-002, 1.626573e-003, -8.740021e-004, 7.203744e-003, 9.221391e-003, 8.267179e-003, 5.467861e-003, 1.394424e-002, 9.829510e-003, -2.492785e-003, -

© ISO/IEC 2004 — All rights reserved


Copyright International Organization for Standardization
Provided by IHS under license with ISO
No reproduction or networking permitted without license from IHS
Not for Resale

1.056364e-002, -5.777511e-003, 6.933086e-003, 2.564289e-002, 3.761370e-002, 3.391403e-002, 2.082021e-002, 3.551018e-003, -8.407791e-003, -1.081992e-002, -5.598454e-003, 5.873372e-003, 2.671640e-003, -1.291728e-002, -1.694565e-002, -1.981993e-002, -1.591277e-002, -4.621056e-003, 1.154453e-002, 2.820966e-002, 4.343307e-002, 4.956723e-002, 4.074367e-002, 3.258942e-002, 2.150256e-002, 6.270136e-003, 8.606212e-003, 9.994337e-003, -3.126050e-003, 1.045664e-002, 1.487381e-002, 1.986251e-003, 3.028742e-003, 4.779271e-003, 4.043832e-003, 3.039225e-002, 2.770321e-002, 8.023650e-003, -1.018091e-002, 1.736025e-003, 1.516673e-002, 1.707387e-002, 2.195965e-003, 9.629019e-003, 1.425642e-002, 1.530271e-003, -5.972370e-003, -3.617090e-003, 6.219211e-003, 2.373350e-002, 3.097402e-002, 2.698902e-002, 2.110817e-002, 8.673159e-003, 4.139625e-003, 2.920636e-003, -3.846075e-003, -5.558049e-003, -1.178706e-002, -1.848881e-002, -1.803339e-002, -1.719279e-002, -1.741209e-002, -4.766905e-003, 1.448704e-002, 3.089311e-002, 4.057793e-002, 4.616973e-002, 3.848270e-002, 3.123947e-002, 2.040148e-002, 1.272924e-002, 1.580910e-002, 1.313537e-002, -3.811307e-003, 1.052307e-002, 3.549212e-003, -6.976326e-003, 5.565922e-003, 4.338991e-003, 3.760689e-004, 1.306066e-002, 1.820798e-002, 1.015755e-004, -1.958472e-002, -6.734901e-003, 1.692043e-002, 2.474517e-002, -7.610779e-004, 2.482069e-003, 1.662404e-002, 4.238975e-003, 1.291140e-003, -2.246529e-003, 7.212695e-003, 1.816601e-002, 2.029139e-002, 1.783919e-002, 2.056454e-002, 1.412050e-002, 8.719095e-003, -2.623409e-003, -1.249514e-002, -1.359346e-002, -1.916926e-002, -2.099183e-002, -2.464420e-002, -2.133394e-002, -1.716126e-002, -6.101688e-004, 2.465972e-002, 3.243276e-002, 2.544327e-002, 2.385019e-002, 2.428454e-002, 2.127156e-002, 1.520885e-002, 1.551630e-002, 2.018547e-002, 1.607986e-002, 6.418585e-004, 5.998247e-003, -8.265401e-003, -2.937195e-003, 1.807331e-003, -2.349545e-003, 1.086935e-002, 3.815088e-003, 1.753233e-002, -2.778552e-003, -1.885706e-002, -1.572417e-002, 1.180489e-002, 2.843742e-002, -1.596637e-003, -8.673905e-003, 1.763504e-002, 2.205364e-003, 9.204081e-003, 3.952094e-003, 7.064248e-003, 1.287367e-002, 1.031896e-002, -4.577805e-004, -4.849510e-003, 5.950249e-003, 1.088999e-002, 4.773679e-003, 1.455258e-003, -2.166406e-004, -2.206674e-003, -3.618462e-003, -7.543512e-003, -6.681435e-004, 8.406781e-003, 1.460388e-002, 1.680760e-002, 9.423204e-003, -1.602258e-005, 5.151452e-005, 9.150916e-003, 1.077089e-002, 1.035911e-002, 1.287803e-002, 2.011609e-002, 1.758869e-002, 1.030250e-004, 4.987017e-004, -5.343131e-003, 5.462097e-003, 2.375729e-003, -4.838546e-003, 1.006512e-002, -6.280826e-003, 1.130927e-002, -3.027528e-003, -1.211395e-002, -1.930343e-002, -3.560649e-003, 1.809728e-002, -5.149234e-003, -9.149454e-003, 1.745661e-002, 3.111995e-003, 5.986438e-003, 9.518006e-003, 1.178060e-002, 1.252608e-002, 3.666607e-003, -8.056576e-003, -5.535209e-003, 3.614890e-003, 5.928328e-003, 2.340889e-003, -8.666783e-003, -2.086448e-002, -2.831943e-002, -3.102234e-002, -2.792255e-002, -1.735152e-002, -6.652611e-003, -2.121205e-003, -1.317383e-002, -2.216995e-002, -2.010413e-002, -4.423738e-003, 2.421803e-003, 4.009174e-003, 4.577975e-003, 7.177786e-003, 1.910634e-002, 1.244134e-002, 2.453002e-003, 3.719809e-004, 8.284630e-003, 1.452740e-002, 4.398565e-003, -3.857527e-003, 1.323530e-002, -5.252892e-003, 4.466252e-003, -7.360598e-003, -7.805896e-003, -9.482820e-003, -1.012800e-002, 2.659028e-003, -7.231308e-003, -8.472692e-003, 1.347926e-002, 4.340406e-003, -1.249454e-003, 1.525986e-002, 1.926203e-002, 1.834718e-002, 6.456367e-003, 2.745379e-003, 3.073518e-003, 6.911888e-003, 1.165489e-002, 1.283999e-002, 1.178162e-002, 4.702848e-003, -2.334066e-003, -8.220806e-003, -6.125045e-003, -6.388131e-003, -7.088177e-003, -9.289611e-003, -1.800743e-002, -2.562465e-002, -2.220533e-002, -3.497395e-003, 3.839847e-003, 6.552818e-003, 2.890367e-004, 2.793293e-003, 1.240360e-002, 3.344277e-003, 3.585198e-003, 9.095641e-003, 2.083772e-002, 1.418067e-002, -1.584106e-004, -4.801892e-003, 1.657499e-002, -2.200937e-003, -1.338492e-004, -8.545659e-003, 2.832363e-003, 5.117339e-003, -9.441817e-003, -8.000463e-003, -8.893381e-003, -2.621820e-003, 1.363071e-002, 5.113920e-003, -6.731694e-003, 8.431252e-003, 2.052844e-002, 2.055229e-002, 8.769059e-003, 3.630453e-004, -1.453046e-003, -5.300821e-003, -5.054937e-003, 1.007342e-003, 9.748411e-003, 9.769434e-003, 4.179893e-003, 1.530494e-003, 1.557538e-003, -6.236017e-004, -1.507798e-003, -2.288846e-003, -1.093555e-002, -1.619109e-002, -1.307732e-002, 9.667278e-004, 9.744110e-003, 7.096157e-003, -7.802544e-003, -9.666500e-003, -5.097440e-003, -4.090553e-003, 3.025242e-003, 1.456086e-002, 1.323297e-002, -3.451538e-004, -3.103045e-003, 4.033167e-003, 1.794629e-002, -2.855335e-003, -1.115924e-002, -5.466039e-003, 1.617344e-002, 1.659221e-002, -4.143086e-003, -7.795395e-003, -1.280275e-002, 3.558102e-004, 1.721854e-002, 4.937576e-003, -1.206322e-002, 2.746539e-004, 1.843574e-002, 2.010627e-002, 6.197355e-003, -5.703653e-003, -8.318385e-003, -1.079453e-002, -1.341230e-002, -8.382560e-003, -3.838892e-003, -5.123050e-003, -8.357788e-003, -9.859502e-003, -1.013895e-002, -1.096795e-002, -9.237640e-003, -1.076535e-002, -1.372705e-002, -1.075715e-002, -4.999765e-003, 9.575883e-003, 1.429096e-002, 4.928160e-003, -1.497656e-002, -2.061839e-002, -1.933645e-002, -9.135442e-003, 2.807754e-003, 1.107950e-002, -5.465585e-003, -8.771391e-003, -9.617822e-003, 1.837426e-003, 1.862614e-002, -3.664811e-003, -1.506765e-002, 2.461431e-003, 1.597655e-002, 2.150628e-002, 8.704548e-003, -1.339505e-004, -1.021263e-002, -1.185778e-003, 8.981257e-003, -4.897141e-003, -1.085046e-002, -4.119795e-004, 1.066098e-002, 1.820110e-002, 5.889988e-003, -7.933100e-004, -3.786247e-003, -3.852756e-003, -4.770862e-003, -4.356956e-003, -1.028266e-003, -1.731129e-004, -3.780145e-003, -5.202383e-003, -2.669198e-003, -9.446006e-004, -


© ISO/IEC 2004 — All rights reserved

Copyright International Organization for Standardization
Provided by IHS under license with ISO
No reproduction or networking permitted without license from IHS
Not for Resale

2.658933e-004, -5.001030e-003, -9.140121e-003, -2.944128e-003, 7.538619e-003, 1.889939e-002, 1.703428e-002, 3.065639e-003, -1.591685e-002, -1.531241e-002, -2.108191e-002, -8.179295e-003, 7.580332e-003, 4.572559e-003, -1.514177e-002, -6.648397e-003, -7.415335e-003, -3.334461e-003, 1.100016e-002, -6.829197e-003, -1.612423e-002, 4.303568e-003, 1.504420e-002, 1.972031e-002, 1.051212e-002, 7.075535e-003, -4.205855e-003, -1.267497e-002, -7.974252e-003, -6.535295e-003, -5.882712e-003, 2.465362e-003, 5.674815e-004, 8.793902e-003, 9.630245e-003, 5.967216e-003, 7.642024e-003, 7.464238e-003, 1.016839e-002, 1.059233e-002, 1.329285e-002, 1.255452e-002, 5.041338e-003, 2.081504e-003, 9.173676e-003, 1.027846e-002, 7.765256e-003, 1.542389e-003, -1.925280e-003, 5.715360e-003, 1.368439e-002, 1.628298e-002, 1.065020e-002, -4.885813e-003, -5.751833e-003, -5.881127e-003, -1.856186e-002, -1.658603e-003, 1.438611e-002, 2.484205e-003, -1.193760e-002, 7.547984e-004, -1.468103e-003, -7.090634e-003, 5.792237e-003, -7.023136e-003, -1.768868e-002, -4.949892e-003, -1.516797e-003, 2.551408e-003, -6.217120e-003, 1.008721e-002, 4.210951e-003, -9.262239e-003, -1.096058e-002, 3.017854e-004, 1.743319e-003, -7.120104e-003, -1.173979e-003, -5.603212e-003, -3.119635e-003, 4.960032e-003, 8.952008e-003, 9.577528e-003, 1.761772e-002, 1.696983e-002, 1.632391e-002, 1.299703e-002, 5.665766e-003, 5.268925e-003, 1.182042e-002, 1.317075e-002, 8.058180e-003, 5.919639e-003, 6.457750e-004, 1.870571e-004, 3.248160e-003, -2.870763e-003, -6.187935e-003, -5.775747e-003, 8.154137e-003, 6.040712e-003, -6.894232e-003, -2.159395e-003, 9.827485e-003, 1.664226e-005, 2.003791e-003, 1.187299e-002, 6.145027e-005, -9.569812e-003, -6.329759e-004, -6.654042e-003, -6.992991e-003, -8.443398e-003, -1.299792e-002, -5.165699e-003, -8.162070e-003, 1.191909e-002, -7.379624e-004, -1.657778e-002, -1.309969e-002, -3.150190e-003, 3.603021e-003, -1.490516e-002, -9.059047e-003, -8.503452e-003, -1.153604e-002, -8.807324e-003, -2.202102e-003, 5.172118e-004, 6.080429e-003, 5.976502e-003, 4.895236e-003, -1.587143e-003, -7.347122e-003, -4.325690e-003, 8.615745e-004, 5.016187e-003, 1.539117e-003, -3.155326e-004, -8.457378e-003, -1.429400e-002, -1.679985e-002, -2.267941e-002, -1.395245e-002, 6.178764e-003, 1.977152e-002, 7.827521e-003, -4.284492e-003, -7.860265e-004, 5.773592e-003, -3.244690e-003, 9.574466e-003, 2.174666e-002, 2.798739e-003, -1.572187e-002, -7.192731e-003, -8.503372e-003, 6.553809e-004, -2.449759e-003, -1.069955e-002, 7.169206e-003, 7.224817e-003, 1.546345e-002, 3.781183e-003, -6.385652e-003, -4.094053e-003, 6.246930e-003, 1.371624e-002, -1.298126e-002, -8.278712e-003, -7.563078e-004, -5.205118e-003, -1.085770e-002, -1.520118e-002, -1.284687e-002, -4.455212e-003, -3.177528e-004, -1.978762e-003, -3.777551e-003, -4.018772e-003, -3.333430e-004, 5.858007e-003, 7.374668e-003, 6.975485e-003, 1.445008e-003, -4.190908e-003, -1.071708e-002, -2.187143e-002, -2.325248e-002, -1.275037e-002, 1.132760e-002, 2.004541e-002, 8.532851e-003, -3.345353e-003, -7.170939e-003, -3.271003e-003, -1.049325e-002, 7.268837e-003, 1.519524e-002, -1.163142e-003, -1.857858e-002, -4.500971e-003, -5.722285e-003, 5.658351e-003, 3.608258e-003, -1.021117e-002, 8.916616e-003, 9.736928e-003, 7.106595e-003, -4.792291e-005, -3.547953e-003, 3.876248e-003, 1.716468e-002, 1.119011e-002, -1.371591e-002, -9.663234e-003, 9.526664e-004, 4.327928e-003, 4.207144e-003, -6.104412e-003, -1.432301e-002, -1.272996e-002, -1.120330e-002, -8.246396e-003, -7.777674e-003, -2.316211e-003, 3.779140e-003, 6.901721e-003, 3.899307e-003, -4.919920e-004, -5.472582e-003, 1.080763e-003, -3.230605e-003, -8.318192e-003, -1.788798e-003, -2.981588e-003, 4.501386e-003, 1.113666e-002, 1.387893e-002, 4.093895e-003, -3.919408e-004, -1.655529e-003, -6.061657e-003, 1.186699e-002, 1.045526e-002, -1.287492e-002, -1.694335e-002, 9.474350e-003, 1.500643e-002, 2.502774e-003, -5.054591e-003, -5.461485e-004, -3.249857e-003, -1.020479e-002, -9.709387e-003, -1.416273e-003, -4.928556e-004, 3.123316e-003, 1.192831e-002, 5.164764e-003, -4.658094e-003, 3.741638e-004, 6.763181e-003, 1.371235e-002, 1.856835e-002, 1.147878e-002, 2.365819e-003, -1.612642e-003, -5.103673e-003, -4.742269e-003, -2.089195e-004, 3.901621e-003, 1.105655e-002, 1.251494e-002, 9.498970e-003, 3.500318e-003, 2.001614e-003, 5.820431e-003, 5.279233e-003, 9.184818e-003, 1.043540e-002, 3.396266e-003, -5.703347e-003, -8.293714e-003, -9.799159e-003, -3.879851e-003, -2.563404e-003, -6.309794e-003, -1.192736e-002, 8.318253e-003, 9.175142e-003, -1.866024e-002, -1.532448e-002, 5.791486e-003, 1.090249e-002, -9.474007e-003, -1.373522e-002, -6.172632e-003, -2.360127e-003, -4.280204e-003, -2.600556e-003, 2.477658e-003, -9.985880e-003, -1.267197e-002, -3.280090e-003, 1.754211e-003, -1.030326e-003, 1.354626e-002, 1.750371e-002, 7.601573e-003, 1.497284e-002, 1.470902e-002, 9.113090e-003, 4.703181e-003, 1.912272e-003, -2.424312e-003, -4.115705e-003, -8.600531e-004, 5.298906e-003, 6.008499e-003, 2.157992e-003, -2.523384e-003, -1.349844e-003, 4.437665e-003, 1.219256e-002, 1.474665e-002, 1.516422e-002, 1.168405e-002, 6.535475e-003, -7.208246e-003, -2.449749e-002, -9.658467e-003, -4.173166e-003, -2.094246e-003, -1.369521e-002, -5.860779e-004, 9.450130e-003, -2.285094e-003, -1.170855e-002, -3.319343e-003, -1.011093e-002, -8.142926e-003, -9.422093e-003, 5.514154e-003, 1.994212e-002, 1.021996e-002, 6.129858e-003, -3.152333e-003, -1.156101e-002, -7.220905e-003, -7.227526e-004, 3.103656e-003, 1.360178e-004, 1.716076e-002, 2.287734e-002, 7.517003e-003, 7.150478e-003, 6.114806e-003, 1.714189e-003, -1.325158e-003, -1.572642e-003, -2.456736e-003, -4.463078e-003, -4.261045e-003, -3.393100e-003, -2.646092e-003, -6.971647e-003, -1.032183e-002, -5.926931e-003, 4.594992e-003, 1.226497e-002, 9.774862e-003, 9.696030e-003, 1.484024e-002, 1.888193e-002, 9.276683e-003, -1.380469e-002, -2.188815e-003, 3.866039e-003, 9.973697e-004, -1.061651e-002, -8.810965e-003, 4.103399e-003,

© ISO/IEC 2004 — All rights reserved
--`,,```,,,,````-`-`,,`,,`,`,,`---


Copyright International Organization for Standardization
Provided by IHS under license with ISO
No reproduction or networking permitted without license from IHS
Not for Resale

1.168081e-002, 8.091656e-003, 3.971848e-004, -2.105445e-002, -1.312828e-003, -1.026514e-003, 4.827926e-003, 9.077666e-003, 5.169818e-003, 4.466712e-003, 2.559442e-003, 9.558444e-004, 9.729704e-003, 9.762910e-003, -3.125842e-003, -8.613185e-003, -2.633786e-003, 6.873138e-003, -5.054814e-003, -1.244488e-002, -1.584300e-002, -1.851195e-002, -1.224119e-002, -4.867304e-003, -2.276727e-004, 1.549832e-003, 7.650500e-004, -2.388539e-003, -5.929799e-003, -1.265584e-002, -1.486952e-002, -1.288951e-002, -8.335173e-003, -4.863931e-003, -3.143659e-003, -2.158519e-003, 2.964295e-003, 1.409263e-002, 1.528342e-002, -8.611822e-003, 6.867670e-003, 3.380374e-003, -8.462901e-004, -1.351856e-003, -3.116160e-003, -5.637606e-003, -1.017560e-003, 1.105509e-002, -1.163740e-003, -3.078994e-002, -1.143512e-002, -1.722388e-002, -1.158554e-002, -3.215082e-003, 2.307346e-003, 1.375898e-002, 2.125215e-002, 1.854855e-002, 2.552041e-002, 1.949401e-002, 3.100802e-003, -1.732132e-003, -1.889194e-003, 7.638268e-003, 8.217934e-003, -4.728472e-003, -6.922241e-003, -1.151686e-002, -9.862954e-003, -7.129448e-003, -7.052734e-003, -7.407668e-003, -8.010160e-003, -6.965722e-003, -8.282536e-003, -1.090696e-002, -1.451277e-002, -1.345565e-002, -1.173649e-002, -1.336388e-002, -1.176873e-002, -1.074277e-002, -1.305927e-003, 6.634133e-003, 8.042177e-003, -1.376081e-003, 1.814088e-002, 4.184340e-003, -7.120676e-003, 7.104665e-004, 1.608456e-002, 9.339033e-003, 1.101497e-002, 9.866883e-003, 6.163559e-003, -1.807299e-002},
{1.753492e-002, 2.332102e-002, 2.674809e-002, 2.455441e-002, 3.404590e-002, 2.272909e-002, -7.574189e-004, -1.877718e-002, -1.003079e-002, 8.275303e-003, 1.380826e-002, 1.135938e-002, -5.588731e-003, -1.904815e-002, -2.343604e-002, -1.663036e-002, -6.383415e-003, -1.428989e-003, 4.944513e-003, 1.364738e-002, 2.284009e-002, 2.598632e-002, 2.945841e-002, 2.506507e-002, 1.574716e-002, 1.533538e-003, -8.104888e-003, -1.048548e-002, -1.016160e-002, -4.872355e-003, 1.317852e-002, 2.990765e-002, 2.099076e-002, 4.173711e-003, 1.125053e-003, -3.444149e-003, -2.410370e-002, -2.787460e-002, -1.312639e-002, 2.036994e-003, -3.586314e-004, 4.166231e-003, 6.584299e-003, -9.736889e-003, 1.353214e-003, 1.029896e-002, -1.277626e-002, -4.660655e-003, -2.782071e-003, 5.985383e-003, 1.968697e-002, -5.889207e-003, -3.046950e-002, -2.650249e-002, -9.085312e-003, 3.242209e-003, 3.544920e-003, -7.096214e-003, -2.325187e-002, -3.000516e-002, -2.754855e-002, -2.150570e-002, -1.900305e-002, -1.500281e-002, -7.960389e-003, 5.918528e-003, 2.098814e-002, 3.137708e-002, 3.418020e-002, 3.095647e-002, 2.241991e-002, 1.340252e-002, -6.823572e-003, -1.930107e-002, -2.553559e-002, -2.243699e-002, -6.999458e-003, 1.349019e-002, 2.192323e-002, 1.047907e-002, -3.454865e-003, 1.152513e-003, -1.063505e-002, -2.555186e-002, -1.797682e-002, -6.110259e-004, 1.229091e-002, 1.297084e-002, 5.867776e-003, -1.052359e-003, 1.351839e-003, 1.039001e-002, -4.147049e-003, -5.065723e-003, -7.301445e-003, 4.193741e-003, 4.634322e-003, -1.312016e-002, -1.705471e-002, -9.813541e-003, 3.037454e-003, 1.615124e-002, 1.812776e-002, 6.539682e-003, 5.349205e-004, -8.275152e-003, -1.279975e-002, -1.766514e-002, -1.797391e-002, -1.361244e-002, -4.086274e-003, 1.077928e-002, 2.612258e-002, 3.242663e-002, 3.405903e-002, 2.978405e-002, 2.293693e-002, 1.773291e-002, -2.998712e-003, -1.521280e-002, -2.542230e-002, -2.700574e-002, -1.462027e-002, 1.369675e-003, 1.786427e-002, 2.098279e-002, 6.007060e-003, -2.434884e-003, 4.351700e-003, -7.142951e-003, -1.623864e-002, -4.936488e-003, 1.283110e-002, 1.575831e-002, 1.162066e-002, 5.129011e-003, -5.252110e-003, 4.399327e-003, -2.902748e-003, -6.315557e-003, -6.949059e-003, 2.473254e-003, 1.021786e-002, 5.012342e-003, -1.125354e-002, -1.630504e-002, 4.017587e-003, 1.425244e-002, 1.829040e-002, 1.215413e-002, 6.013566e-003, -1.032324e-003, -7.850363e-003, -1.511992e-002, -1.329627e-002, -8.257557e-003, -7.583948e-004, 1.036172e-002, 2.195513e-002, 2.232250e-002, 1.937047e-002, 1.564732e-002, 1.193485e-002, 1.162758e-002, -2.014588e-003, -1.497270e-002, -2.541401e-002, -2.735732e-002, -2.234678e-002, -3.599091e-003, 1.667619e-002, 2.373870e-002, 1.841435e-002, -1.836147e-003, -1.206847e-003, 8.905003e-003, 6.952231e-003, 2.094392e-003, 2.206639e-002, 1.128545e-002, 9.818504e-003, 1.115940e-002, -2.916110e-003, -7.956472e-004, -1.734191e-002, -1.502054e-002, -1.177565e-002, -3.937754e-004, 1.721009e-002, -1.226536e-003, -1.823013e-002, -1.852952e-002, -3.455235e-003, -2.973516e-005, 1.977034e-003, 7.082365e-003, 4.032752e-003, -3.363915e-003, -6.097123e-003, -6.208651e-003, -5.690209e-003, 1.856505e-005, 5.626304e-003, 1.199829e-002, 1.592976e-002, 8.957821e-003, 4.967031e-003, 7.085156e-003, 4.923170e-003, 3.886458e-003, -3.289510e-003, -7.129313e-003, -1.137375e-002, -1.279667e-002, -1.599630e-002, -3.793763e-003, 1.541626e-002, 3.173836e-002, 2.924242e-002, 1.176653e-002, -4.523628e-003, 1.539429e-003, 1.570266e-002, 1.152530e-002, 1.880785e-002, 2.156531e-002, 2.653469e-003, 9.148503e-003, 2.526216e-004, 1.744609e-003, -1.454062e-002, -7.615232e-003, -1.379334e-003, 1.576218e-002, 1.020245e-002, -1.098379e-002, -2.204569e-002, -1.877594e-002, -1.653193e-002, -1.808916e-002, -7.717917e-003, 8.732836e-004, -1.935533e-003, -7.701169e-003, -5.362484e-003, 5.980373e-003, 1.459033e-002, 1.845746e-002, 1.748606e-002, 1.062100e-002, 1.966952e-003, -9.803926e-003, -1.545355e-002, -1.270771e-002, -7.498253e-003, -2.562924e-003, -3.198480e-003, -4.504239e-003, -8.318014e-004, 5.742547e-003, 4.374483e-003, 3.971568e-003, 1.212803e-002, 2.001279e-002, 2.533407e-002, 1.659626e-002, -9.886667e-003, -2.907848e-002, -1.433981e-002, -2.524085e-003, -2.760216e-003, 1.148876e-002, -1.344057e-002, -1.255672e-002, -1.291219e-002, -1.228328e-002, -1.202295e-002, 3.280584e-004, 1.408962e-003, 1.656153e-002, 8.580662e-003, -7.422387e-003, -2.577958e-003, -1.212934e-002, -1.854654e-002, -1.131267e-002, -7.290773e-003, -1.730764e-003, -


© ISO/IEC 2004 — All rights reserved

Copyright International Organization for Standardization
Provided by IHS under license with ISO
No reproduction or networking permitted without license from IHS
Not for Resale

1.292586e-002, -1.351349e-002, -8.671369e-004, 1.649427e-002, 2.773257e-002, 3.646847e-002, 3.181699e-002, 1.807715e-002, 7.439803e-003, -5.574223e-003, -1.543778e-002, -1.199987e-002, -3.676762e-003, 3.272681e-003, 8.926886e-003, 1.117336e-002, 8.497721e-003, 1.063797e-002, 1.389880e-002, 1.893336e-002, 1.801525e-002, 1.564057e-002, 1.638056e-002, 1.069583e-002, -4.271706e-003, -2.575801e-002, -2.983644e-002, -1.577006e-002, -3.751092e-003, 1.412610e-003, 2.700065e-004, -1.174445e-002, -1.466752e-002, -1.430230e-002, -9.453140e-003, 2.044748e-003, 2.450728e-003, 1.194949e-002, 8.226478e-003, 9.740457e-003, 8.871672e-003, -1.076424e-002, -7.014249e-003, -4.277561e-004, -1.449141e-003, -1.535400e-002, -2.637465e-002, -1.805023e-002, -9.234679e-003, 2.286546e-003, 1.856650e-002, 3.054092e-002, 2.962057e-002, 2.211184e-002, 1.228660e-002, 9.429701e-004, -7.866258e-003, -4.735202e-003, 7.305032e-003, 1.569022e-002, 2.057606e-002, 1.852520e-002, 9.852061e-003, 4.374221e-003, 1.460351e-003, 5.099137e-003, 1.544022e-002, 1.397602e-002, 3.272813e-003, -1.551897e-003, -9.755465e-003, -1.994636e-002, -2.237786e-002, -1.773268e-002, -1.095291e-003, -3.292278e-003, -3.687537e-003, -6.891360e-003, -1.436010e-002, -1.198006e-002, -7.157738e-003, 4.204998e-003, 3.662517e-003, 1.104250e-003, 4.992967e-003, 2.227635e-002, 7.155634e-003, -5.243233e-003, 5.233036e-003, 4.720953e-003, -9.711141e-003, -2.201493e-002, -2.374731e-002, -2.910934e-002, -2.827400e-002, -1.335827e-002, 9.257501e-003, 2.205756e-002, 2.897316e-002, 2.036124e-002, 1.140058e-002, 1.996648e-003, -2.772651e-003, 2.471461e-003, 1.438316e-002, 2.147944e-002, 2.722485e-002, 2.174219e-002, 5.835552e-003, -5.364938e-003, -1.205485e-002, -1.520820e-002, -4.990635e-003, 1.613065e-003, -7.125414e-003, -1.714124e-002, -2.246188e-002, -2.412580e-002, -1.577967e-002, -5.377479e-003, -4.676971e-003, -8.618669e-004, -5.060888e-003, -7.486851e-003, -9.080837e-003, -1.002573e-002, -2.903500e-003, 3.417190e-003, -6.224180e-004, -7.971663e-003, 1.067937e-002, 2.106239e-002, 3.357371e-003, 3.569177e-003, 1.304827e-002, 4.476396e-003, -3.301413e-003, -9.567001e-003, -1.804797e-002, -2.775958e-002, -2.935595e-002, -1.537123e-002, 8.468608e-003, 2.314510e-002, 2.885687e-002, 1.571407e-002, 1.680896e-003, -1.058268e-002, -1.318087e-002, -1.004741e-002, -2.525518e-003, -3.493423e-004, 8.369079e-003, 8.434843e-003, 1.457346e-003, -6.751739e-003, -1.563067e-002, -2.511496e-002, -2.302742e-002, -9.920527e-003, -8.241317e-003, -1.568183e-002, -2.746308e-002, -2.739879e-002, -1.428111e-002, 9.971320e-003, 9.177200e-003, -2.489691e-003, 5.340071e-004, -9.075556e-003, -1.060816e-002, -7.388532e-003, -3.841569e-003, -5.569967e-003, -5.921980e-003, -5.833031e-003, 9.864658e-003, 1.546639e-002, 1.050557e-002, 1.882025e-002, 1.285396e-002, 8.013170e-003, 1.122231e-002, 6.942088e-003, -9.133868e-003, -1.806855e-002, -1.432774e-002, -6.942699e-004, 1.357329e-002, 1.827746e-002, 1.716521e-002, 3.817839e-004, -1.597679e-002, -3.118606e-002, -3.447674e-002, -3.552530e-002, -3.222882e-002, -2.943972e-002, -2.224263e-002, -1.705102e-002, -1.298191e-002, -1.282210e-002, -1.092594e-002, -2.385564e-002, -2.547889e-002, -1.689864e-002, -1.014541e-002, -8.052190e-003, -1.769760e-002, -2.198617e-002, -1.068835e-002, 1.481688e-002, 2.734386e-002, 6.126025e-003, 5.341946e-003, -7.498594e-003, -8.043056e-003, 1.030656e-003, -1.067104e-002, -1.110584e-002, -5.462945e-003, -6.720854e-004, 9.623169e-004, 3.540136e-003, 1.986040e-002, 2.061386e-002, 2.841450e-003, 7.984488e-003, 2.247655e-002, 1.642379e-002, -3.998531e-003, 3.118289e-004, 5.895485e-003, 1.379351e-002, 1.996064e-002, 1.619245e-002, 1.148590e-002, -3.271434e-003, -2.576824e-002, -4.384855e-002, -5.084164e-002, -5.227968e-002, -5.176238e-002, -5.119050e-002, -4.397904e-002, -3.458637e-002, -2.674185e-002, -1.442194e-002, -4.657590e-003, -6.291176e-003, -1.372133e-002, -1.456190e-002, -1.180337e-002, 2.584835e-004, -3.631898e-003, -1.075496e-002, -1.118348e-002, 1.297640e-002, 2.600572e-002, 5.511115e-003, 2.387754e-003, -4.404785e-003, -2.692716e-003, 1.424934e-002, -1.404134e-002, -1.133252e-002, -9.252008e-004, -1.391721e-002, -2.125613e-002, -7.045186e-003, 2.143961e-002, 1.050291e-002, -9.902249e-003, 9.939181e-003, 2.567551e-002, 1.259925e-002, 2.593670e-003, 8.945218e-003, 1.542490e-002, 2.419945e-002, 3.134340e-002, 2.956312e-002, 1.944634e-002, 2.162289e-003, -2.006989e-002, -3.933945e-002, -4.992508e-002, -5.488959e-002, -6.161965e-002, -5.701894e-002, -5.111841e-002, -3.851428e-002, -2.643164e-002, -7.497224e-003, 4.759994e-003, 5.952862e-003, 4.075732e-003, 1.680446e-003, -2.037736e-003, 6.398591e-003, 3.325268e-003, -8.723243e-004, 7.067920e-004, 1.202377e-002, 1.549300e-002, 1.692315e-003, 5.374314e-003, 6.435619e-003, -2.752406e-003, 2.147678e-002, -1.237478e-002, -6.171788e-003, 2.382019e-003, -2.258430e-002, -3.428680e-002, -1.430312e-002, 1.330456e-002, -8.891590e-003, -2.601333e-002, 4.639500e-003, 1.551792e-002, 1.458994e-003, -6.240625e-003, 3.987303e-003, 1.542898e-002, 2.649404e-002, 3.773714e-002, 3.601682e-002, 2.617043e-002, 1.250646e-002, -5.592678e-003, -1.984881e-002, -2.757316e-002, -3.360924e-002, -4.101840e-002, -4.226714e-002, -3.792905e-002, -2.995656e-002, -2.045065e-002, -8.120845e-004, 2.008306e-002, 2.627878e-002, 3.143449e-002, 2.782834e-002, 1.945374e-002, 9.133359e-003, 2.966160e-003, 6.034651e-004, 4.156333e-003, 1.174499e-002, 5.503998e-003, -6.805563e-003, 1.126727e-002, 1.633691e-002, -6.102332e-003, 2.276460e-002, -7.059767e-003, 1.230930e-003, 4.855562e-003, -2.453378e-002, -3.558374e-002, -1.851656e-002, 7.137402e-004, -2.631127e-002, -3.910795e-002, -4.110251e-003, -2.745314e-003, -2.034736e-002, -2.154883e-002, -4.787062e-003, 9.163827e-003, 1.998889e-002, 3.102863e-002, 3.006976e-002, 2.202198e-002, 1.650934e-002, 5.412554e-003, 3.948937e-004, -3.378196e-003, -4.501686e-003, -5.542750e-003, -1.091896e-002, -1.338568e-002, -6.034657e-003, -

© ISO/IEC 2004 — All rights reserved


Copyright International Organization for Standardization
Provided by IHS under license with ISO
No reproduction or networking permitted without license from IHS
Not for Resale

2.081999e-003, 1.294103e-002, 3.693536e-002, 4.717315e-002, 5.190945e-002, 5.495315e-002, 4.297262e-002, 1.537509e-002, -1.800971e-004, -7.820331e-003, -5.096737e-004, 9.139189e-003, -4.432616e-003, -1.639201e-002, 1.032850e-002, 1.916166e-002, -5.531414e-003, 2.168970e-002, -3.691398e-004, 6.399019e-003, 5.638767e-003, -1.984162e-002, -3.027002e-002, -2.202653e-002, -1.352110e-002, -3.663798e-002, -4.128254e-002, -1.115603e-002, -1.942110e-002, -3.742494e-002, -3.718631e-002, -2.021125e-002, -8.373761e-003, 3.489250e-003, 1.205942e-002, 1.220686e-002, 1.211897e-002, 1.346760e-002, 1.175170e-002, 1.526685e-002, 1.571100e-002, 1.635896e-002, 1.605939e-002, 1.183247e-002, 7.576713e-003, 7.294556e-003, 8.319003e-003, 1.653911e-002, 3.605180e-002, 4.667000e-002, 5.332531e-002, 5.594915e-002, 5.051560e-002, 1.795936e-002, -7.545844e-003, -1.548125e-002, -7.838711e-003, 6.599294e-003, -1.230923e-002, -2.049040e-002, 9.881819e-003, 1.777924e-002, -4.457027e-003, 2.157076e-002, 1.011523e-002, 6.670239e-003, 7.387706e-003, -1.112412e-002, -1.765409e-002, -1.715070e-002, -1.676908e-002, -3.585789e-002, -3.170303e-002, -1.758595e-002, -2.789507e-002, -4.587610e-002, -5.255118e-002, -4.329085e-002, -3.774578e-002, -3.157443e-002, -2.373316e-002, -1.499635e-002, -6.056274e-003, 6.169771e-003, 1.749255e-002, 2.523478e-002, 2.916376e-002, 3.167758e-002, 2.950819e-002, 1.965337e-002, 9.958052e-003, 1.188618e-004, -1.407878e-002, -1.342393e-002, -1.638899e-003, 1.377428e-002, 2.580868e-002, 3.827845e-002, 4.241630e-002, 1.964583e-002, -1.840064e-002, -2.400160e-002, -1.633685e-002, -3.209945e-003, -1.700365e-002, -1.585518e-002, 1.105104e-002, 1.428852e-002, -3.395508e-003, 1.402146e-002, 1.714603e-002, 9.341393e-003, 8.000093e-003, 6.288070e-003, 6.852303e-004, -9.808207e-003, -1.054346e-002, -1.767257e-002, -1.535614e-002, -1.053017e-002, -2.326043e-002, -3.934740e-002, -3.740694e-002, -3.307932e-002, -3.969530e-002, -5.081518e-002, -5.353687e-002, -4.860302e-002, -3.325153e-002, -1.088770e-002, 1.259177e-002, 2.837865e-002, 3.656861e-002, 4.146756e-002, 3.373136e-002, 1.166092e-002, -1.502164e-002, -4.507831e-002, -6.294918e-002, -6.052433e-002, -4.468107e-002, -1.304045e-002, 1.553365e-002, 3.436244e-002, 3.564784e-002, 1.445660e-002, -2.013768e-002, -2.357540e-002, -1.475980e-002, -9.695022e-003, -1.533354e-002, -1.204843e-004, 1.006095e-002, 6.497526e-003, -2.379956e-003, 6.089835e-003, 2.475057e-002, 1.315842e-002, 1.778769e-002, 2.790600e-002, 2.476191e-002, 1.057792e-002, 9.765432e-003, 3.896039e-003, 1.265009e-002, 8.923989e-003, 2.161065e-004, 1.207798e-003, 2.047046e-002, 2.743183e-002, 2.193947e-002, 8.079738e-003, -7.289632e-003, -2.480283e-002, -3.051677e-002, -1.765891e-002, -2.049661e-003, 1.600182e-002, 2.753870e-002, 3.315519e-002, 2.315363e-002, -4.982213e-003, -4.024278e-002, -6.126520e-002, -5.088381e-002, -1.700516e-002, 1.493127e-002, 4.885808e-002, 6.501086e-002, 6.372975e-002, 5.584015e-002, 2.403681e-002, -9.890631e-003, -1.074977e-002, -5.367262e-003, -9.740588e-003, -2.402058e-003, 1.467405e-002, 6.633257e-003, -4.585400e-003, -2.028810e-003, 5.532147e-003, 3.117472e-002, 2.418875e-002, 2.972054e-002, 4.605207e-002, 4.403527e-002, 2.692754e-002, 3.399645e-002, 3.204912e-002, 3.514945e-002, 1.971704e-002, 1.730851e-002, 1.832770e-002, 8.191940e-003, -8.807814e-003, -2.293157e-002, -3.072393e-002, -4.497285e-002, -5.832667e-002, -5.468600e-002, -3.090162e-002, -1.687482e-002, 1.460574e-003, 1.653427e-002, 1.995550e-002, 1.133590e-002, -1.155664e-002, -3.870014e-002, -4.549509e-002, -3.110611e-002, -2.005718e-002, -7.564665e-003, 3.312862e-003, 1.603555e-002, 1.709448e-002, 1.623198e-002, 1.122405e-002, -2.479523e-003, 6.975477e-003, 1.258337e-002, -3.456262e-003, 9.360593e-003, 2.009056e-002, 8.129015e-003, -3.513309e-003, 3.392448e-003, 6.940156e-003, 3.370546e-002, 3.090268e-002, 3.071280e-002, 4.923527e-002, 4.965874e-002, 2.985976e-002, 4.767786e-002, 4.428230e-002, 3.945296e-002, 1.999186e-002, 2.056452e-002, 7.588824e-003, -1.656332e-002, -2.720846e-002, -2.966265e-002, -3.597319e-002, -3.921511e-002, -3.849622e-002, -3.405871e-002, -2.187827e-002, -8.630854e-003, 9.891217e-003, 2.050733e-002, 2.014011e-002, 1.847496e-002, 7.105624e-003, 3.093638e-003, -6.595478e-003, -1.199018e-002, -2.045863e-002, -2.977522e-002, -2.038793e-002, 1.606686e-003, 2.132771e-002, 1.859210e-002, -1.085527e-002, -2.757388e-002, 1.225099e-002, 3.017847e-002, 1.214125e-002, 2.263703e-002, 2.858572e-002, 1.327099e-002, 7.262133e-003, 8.268550e-003, 4.608643e-003, 1.847608e-002, 2.417560e-002, 3.028067e-002, 3.867152e-002, 4.738264e-002, 2.224929e-002, 5.037577e-002, 3.705638e-002, 2.986954e-002, 2.024375e-002, 3.557200e-002, 3.542675e-002, 2.387079e-002, 2.201292e-002, 2.008941e-002, 1.796428e-002, 2.079096e-002, 2.981952e-002, 3.140606e-002, 2.764012e-002, 2.244890e-002, 3.065426e-002, 3.301451e-002, 2.081942e-002, 2.317934e-002, 3.503066e-002, 4.899445e-002, 3.891796e-002, 2.933281e-002, 1.547616e-002, 1.603456e-002, 3.004082e-002, 5.039445e-002, 6.937618e-002, 7.697784e-002, 4.304230e-002, -6.733304e-003, 1.364225e-002, 4.237502e-002, 2.292006e-002, 2.944093e-002, 3.067424e-002, 9.274510e-003, 1.307214e-002, 1.643889e-002, 4.996906e-003, 1.341853e-002, 1.535299e-002, 1.588896e-002, 1.673567e-002, 2.857381e-002, 3.876094e-003, 3.105763e-002, 2.061973e-002, 1.801218e-002, 5.725650e-004, 2.268148e-002, 4.338924e-002, 2.925562e-002, 6.744857e-004, -2.072470e-002, -2.713457e-002, -2.507756e-002, -3.395540e-003, 2.994440e-002, 3.715323e-002, 2.494011e-002, 1.710707e-002, 3.294937e-003, -2.356982e-002, -1.841402e-002, 2.445827e-002, 4.237264e-002, 3.013649e-002, -3.279506e-003, -3.654650e-002, -3.645345e-002, -1.376463e-002, 1.232386e-002, 4.199849e-002, 6.853587e-002, 6.394519e-002, 1.221412e-002, 2.576457e-003, 3.136330e-002, 1.049948e-002, 1.214353e-002, 1.088630e-002, -6.726376e-003, 2.369010e-002,


© ISO/IEC 2004 — All rights reserved

Copyright International Organization for Standardization
Provided by IHS under license with ISO
No reproduction or networking permitted without license from IHS
Not for Resale

1.042023e-002, -6.825336e-003, 8.686245e-003, 5.514271e-003, -1.910650e-002, -2.949446e-002, -7.490210e-003, -1.956524e-002, -7.877067e-004, 2.339091e-003, -4.832471e-003, -3.394268e-002, -1.420892e-002, 1.323909e-002, -5.591290e-004, -5.462995e-003, -7.366228e-003, -1.789451e-002, -4.398922e-003, 1.943794e-002, 2.958123e-002, 1.538934e-002, 1.018983e-002, 5.583683e-003, -2.308698e-002, -6.552239e-002, -6.944609e-002, -4.784287e-003, 2.853735e-002, 2.010443e-002, 1.104281e-002, 4.931207e-003, 1.909138e-002, 3.154552e-002, 4.508602e-003, -8.884863e-003, 1.148669e-002, 3.168587e-002, 3.682313e-003, -2.940041e-002, -9.169831e-003, -2.257402e-002, -1.086234e-002, -1.740123e-002, -2.533395e-002, 2.471956e-002, 1.267102e-002, -7.640874e-005, -9.004283e-004, -6.305636e-003, -3.216184e-002, -4.306100e-002, -2.666894e-002, -3.045106e-002, -2.840643e-002, -2.974078e-002, -2.609584e-002, -5.201254e-002, -3.492959e-002, -2.119698e-003, -8.106604e-003, -6.436028e-003, -2.294049e-004, -2.549467e-002, -1.927276e-002, 6.593275e-003, 1.569139e-002, 9.122903e-004, -6.639306e-003, 3.696012e-003, -2.310400e-002, -6.593712e-002, -8.002914e-002, -2.889395e-002, 1.520212e-002, 1.413959e-002, 2.203872e-002, 1.083277e-002, 4.219781e-003, -1.264731e-002, -5.756945e-002, -5.834732e-002, -2.394147e-002, 4.067769e-003, -4.232540e-003, -3.286572e-002, -2.040354e-002, -2.733380e-002, -9.561228e-003, -2.554855e-002, -2.627950e-002, 2.619892e-002, 1.425289e-002, 2.136407e-002, 5.298263e-003, -2.998683e-003, -2.393759e-002, -2.391050e-002, -1.191134e-002, -1.649936e-002, -2.457257e-002, -1.726213e-002, -1.556515e-003, -1.115845e-002, -5.684820e-003, 7.658392e-003, -1.195296e-002, -2.907098e-002, -2.204386e-002, -1.099448e-002, -8.382641e-004, 7.327530e-003, 9.323437e-003, -2.295442e-004, -1.670896e-002, -3.033815e-003, -1.443542e-002, -3.656099e-002, -5.311383e-002, -4.616872e-002, 1.026172e-003, 1.581663e-002, 1.098284e-002, 8.681619e-003, -2.963067e-003, -3.682827e-002, -6.760207e-002, -7.318542e-002, -3.680238e-002, 3.513733e-003, 1.080395e-002, 5.541413e-004, 1.514484e-002, -2.069723e-004, -3.762395e-003, -2.071983e-002, -1.786701e-002, 1.539051e-002, -1.287722e-003, 3.423964e-002, 1.148840e-002, 5.976464e-003, -2.542752e-003, -1.485564e-003, 1.952165e-003, 1.517879e-003, -7.937653e-003, -9.252094e-003, 2.449529e-003, 9.053018e-003, 1.281618e-002, 2.382358e-002, -2.861787e-003, -2.369992e-002, -1.607238e-002, -8.553252e-004, 1.077710e-002, 1.384456e-002, 5.139921e-003, -1.493768e-002, -2.150631e-002, -1.461224e-002, -1.570338e-002, -2.231831e-002, -3.371877e-002, -4.974962e-002, -3.126002e-002, 1.708788e-003, 1.005408e-002, 1.043311e-002, 2.389422e-003, -1.917223e-002, -4.474617e-002, -5.274967e-002, -3.062807e-002, 8.171073e-003, 1.643783e-002, 1.511058e-002, 2.238268e-002, 2.302596e-002, 5.069251e-003, -2.097698e-002, -2.475965e-002, -1.419034e-003, -2.023557e-002, 4.235026e-002, 2.167939e-002, 1.739061e-002, 6.587915e-003, 3.570733e-003, 1.408031e-003, -2.383063e-003, -2.681740e-003, -4.853996e-003, -5.233157e-003, 1.325108e-002, 2.995774e-002, 2.930957e-002, 1.270474e-002, 3.894654e-003, 1.029603e-002, 2.206537e-002, 2.608976e-002, 2.218786e-002, 7.829283e-004, -2.550423e-002, -9.999476e-003, -1.102090e-002, -7.610925e-003, -7.777858e-003, -1.525569e-002, -3.469341e-002, -4.545566e-002, -1.705700e-002, 2.213270e-003, 1.695476e-002, 1.777098e-002, 7.185315e-003, -9.745306e-003, -2.300478e-002, -1.281699e-002, 1.446921e-002, 2.174843e-002, 1.830918e-002, 2.018758e-002, 3.102498e-002, 8.088806e-003, -1.643551e-002, -2.316520e-002, -9.564772e-003, -3.834948e-002, 4.106291e-002, 2.813292e-002, 2.692243e-002, 7.690325e-003, 1.200581e-002, 3.405200e-003, 5.710117e-004, -3.351637e-005, -6.999649e-003, -1.061530e-002, 3.828709e-003, 3.289895e-002, 3.223366e-002, 1.516181e-002, 1.230077e-002, 2.051280e-002, 2.432332e-002, 1.945414e-002, 8.287476e-003, -1.487052e-002, -1.147060e-002, 1.709993e-003, 8.867058e-003, 1.328168e-002, 1.894277e-002, 1.539178e-002, -2.035273e-003, -2.603349e-002, -2.837332e-002, -1.036403e-002, 5.918896e-003, 1.592658e-002, 1.280874e-002, 4.990686e-003, -7.768809e-003, -5.046231e-003, 1.450406e-002, 2.080123e-002, 1.203234e-002, 5.987892e-003, 2.121252e-002, 1.003918e-002, -1.115019e-002, -1.472198e-002, -9.628605e-003, -3.593430e-002, 3.911442e-002, 2.287140e-002, 1.235219e-002, 3.218725e-003, 1.867781e-002, 7.340763e-003, -1.929165e-003, 6.472940e-003, -4.547057e-003, -8.122189e-003, 1.562696e-003, 2.629569e-002, 2.646324e-002, 7.578341e-003, 7.357277e-003, 9.918733e-003, 5.569835e-003, 1.377512e-003, 2.756566e-003, 4.753313e-003, 1.976172e-002, 2.062653e-002, 3.363468e-002, 3.652964e-002, 4.174388e-002, 4.478580e-002, 3.305012e-002, 1.329455e-002, -1.813513e-003, -5.179205e-003, -1.192427e-003, -2.377383e-003, -4.640174e-004, 2.706854e-004, -5.240978e-003, -4.207416e-004, 1.192927e-002, 8.188197e-003, 4.483342e-003, -9.691819e-003, 6.447556e-003, 6.332677e-003, -4.740263e-003, -5.897843e-003, -8.462588e-003, -3.183846e-002, 3.623967e-002, 2.776552e-002, 4.223323e-003, -1.134914e-002, 8.915041e-003, 3.783680e-003, -1.487106e-002, 1.201164e-002, 1.257855e-003, -8.974800e-003, -4.163853e-003, 8.306165e-003, 1.451267e-002, 4.458858e-003, 1.886999e-003, 1.129301e-002, 1.357664e-002, 1.330054e-002, 1.731690e-002, 3.237944e-002, 3.021992e-002, 3.278683e-002, 4.529273e-002, 4.535965e-002, 5.054950e-002, 5.787507e-002, 5.777393e-002, 4.564959e-002, 3.219750e-002, 2.044279e-002, 1.128673e-002, 5.466471e-003, 2.976970e-003, -1.540226e-003, -7.095230e-003, -8.554864e-003, -3.195459e-003, -6.143330e-003, -1.130568e-002, -2.334744e-002, -4.472802e-003, 5.312630e-003, 1.838254e-004, 1.394051e-003, -5.371483e-003, -2.805217e-002, 1.508975e-003, 1.539425e-002, -7.824393e-003, -2.574176e-002, -1.256449e-002, -7.082399e-003, -2.248278e-002, 1.189560e-002, 2.534629e-003, -1.308019e-002, -1.431619e-002, -9.312790e-003, -8.861476e-003, -1.558203e-002, -9.892560e-003,

© ISO/IEC 2004 — All rights reserved


Copyright International Organization for Standardization
Provided by IHS under license with ISO
No reproduction or networking permitted without license from IHS
Not for Resale

1.983754e-003, 7.570471e-003, 1.486258e-002, 2.717753e-002, 3.090159e-002, 3.021431e-002, 3.519732e-002, 3.868171e-002, 3.987934e-002, 4.134600e-002, 3.727475e-002, 4.419033e-002, 6.152489e-002, 5.885459e-002, 3.741232e-002, 1.546205e-002, 1.624811e-003, -7.389608e-003, -1.734495e-002, -2.803873e-002, -2.679948e-002, -2.389711e-002, -2.323843e-002, -2.160094e-002, -2.513591e-002, -1.005288e-002, 6.690273e-006, -5.297194e-004, 1.527690e-002, 1.767775e-003, -2.613236e-002, -5.450157e-003, 5.807394e-003, -1.845213e-002, -3.173949e-002, -2.206922e-002, -1.569097e-002, -2.693122e-002, 8.972607e-003, 7.115881e-003, -1.377152e-002, -2.077338e-002, -2.352986e-002, -2.523155e-002, -3.479947e-002, -3.383894e-002, -2.205473e-002, -9.638297e-003, 5.997445e-003, 1.538664e-002, 1.036498e-002, 8.904111e-003, 1.062153e-002, 1.339200e-002, 1.860369e-002, 2.372954e-002, 1.497781e-002, 7.968278e-003, 3.227857e-002, 5.021241e-002, 3.521815e-002, 8.340221e-003, -1.303238e-002, -3.260597e-002, -4.585776e-002, -5.125209e-002, -4.600517e-002, -3.833759e-002, -3.032699e-002, -2.565436e-002, -2.480309e-002, -1.547907e-002, -4.294828e-003, 7.214496e-003, 2.138473e-002, 1.034428e-002, -1.436418e-002, -5.016359e-003, 3.229597e-004, -2.768532e-002, -3.998651e-002, -2.799320e-002, -1.165420e-002, -2.147907e-002, 2.661752e-003, 1.145501e-002, -5.965953e-003, -2.008497e-002, -2.640660e-002, -3.050690e-002, -4.154950e-002, -4.541850e-002, -3.417288e-002, -1.526285e-002, 1.141224e-003, 2.992908e-003, -1.067033e-002, -7.593530e-003, 1.229554e-002, 9.065538e-003, -3.846138e-003, 6.901738e-003, 2.396085e-002, 6.747501e-003, -1.712563e-002, 1.270799e-003, 1.022887e-002, 4.882250e-003, -1.241668e-002, -3.671196e-002, -5.315763e-002, -5.812006e-002, -4.979881e-002, -3.953827e-002, -3.237438e-002, -1.627626e-002, -1.312305e-002, -1.555608e-002, -4.953165e-003, 9.843028e-003, 2.994942e-002, 1.010487e-002, -1.613661e-002, -5.012570e-003, -1.355998e-002, -2.654463e-002, -3.484325e-002, -2.130371e-002, -4.052508e-003, -1.691938e-002, -1.425645e-002, 1.361487e-002, 8.091752e-003, -5.823814e-003, -1.905459e-002, -2.512501e-002, -3.782811e-002, -4.058011e-002, -2.659106e-002, -1.097123e-002, 8.667228e-004, 3.209328e-003, -2.318482e-003, 1.543907e-002, 4.937591e-002, 4.352663e-002, 9.162605e-003, -9.174196e-004, 2.594326e-002, 3.317456e-002, -3.143476e-003, -2.371056e-002, -2.150499e-002, -8.020569e-003, -1.156200e-002, -2.599418e-002, -3.872728e-002, -4.158321e-002, -3.708565e-002, -3.429495e-002, -2.809574e-002, -2.483759e-003, -3.944071e-003, -5.799715e-003, -1.218906e-003, 1.734668e-002, 3.331631e-002, 7.405708e-003, -1.222832e-002, -2.493197e-003, -2.374001e-002, -2.149475e-002, -2.104795e-002, -1.803631e-003, 1.654362e-002, -2.971636e-004, -1.971287e-002, 2.000932e-003, 8.191018e-003, 8.283940e-004, -8.666290e-003, -1.181704e-002, -2.405548e-002, -2.488209e-002, -1.267134e-002, 2.092903e-003, 6.009363e-003, 1.185340e-004, -1.622850e-003, 7.843459e-003, 1.984134e-002, 1.132913e-002, -3.489867e-003, -1.378937e-002, -1.369662e-002, -6.783706e-003, -2.076280e-002, -2.974774e-002, -2.573402e-002, -1.808886e-002, -1.508504e-002, -1.103279e-002, -1.847169e-002, -1.970211e-002, -2.193746e-002, -2.737729e-002, -1.660316e-002, 9.310674e-003, -4.372519e-003, 4.049638e-003, 2.320793e-003, 7.720488e-003, 1.519079e-002, -3.947372e-003, -6.652629e-003, -5.023846e-003, -3.009481e-002, -7.282976e-003, 1.944994e-003, 4.389391e-003, 2.052944e-002, 1.226118e-002, -1.167185e-002, -1.291604e-002, -6.374361e-003, -1.324178e-003, -3.941907e-003, -6.079356e-003, -1.086026e-002, -1.251389e-002, 2.371356e-003, 1.834389e-002, 2.378276e-002, 1.295873e-002, -2.197567e-003, -1.250225e-002, -1.488325e-002, -2.400141e-002, -2.779649e-002, -3.415644e-002, -3.616086e-002, -1.819349e-002, -1.979903e-002, -2.077027e-002, -1.903689e-002, -1.031606e-002, -7.977511e-003, 1.636172e-003, 1.289530e-003, 8.011010e-005, -9.422062e-003, -1.885162e-002, 3.253032e-003, 2.063272e-002, -3.654286e-003, -2.243679e-003, -3.997176e-003, -5.048917e-003, 2.835210e-004, -1.798597e-002, -5.990905e-003, -5.415616e-003, -3.560330e-002, 2.464337e-003, 1.365520e-002, 9.264640e-003, 9.895296e-003, 9.197963e-003, 5.475042e-004, -1.749592e-004, -1.463895e-002, -9.088444e-003, -2.133959e-003, -2.187064e-003, 3.801767e-003, 1.840900e-004, 1.692264e-002, 3.541076e-002, 4.504375e-002, 3.173809e-002, 1.809584e-002, 6.666863e-003, -9.105089e-003, -1.706937e-002, -1.469353e-002, -1.954711e-002, -1.903184e-002, -5.785365e-003, 1.023921e-003, 9.746255e-003, 1.521434e-002, 1.262795e-002, 7.663478e-003, 1.500259e-002, 2.334563e-002, 2.066285e-002, 3.169945e-003, -1.753116e-003, 2.772517e-002, 2.783079e-002, -1.891503e-002, -1.542599e-002, -6.991539e-003, 3.137917e-003, 2.023581e-003, -9.503226e-003, -8.577269e-004, -6.210320e-003, -4.501050e-002, -1.052257e-002, 1.726227e-002, 1.285247e-002, -7.972112e-004, -2.131007e-003, 4.457054e-004, 4.314248e-003, -8.818392e-003, -1.024965e-002, 1.852675e-003, 1.039534e-003, 7.322051e-003, 9.757470e-003, 2.416375e-002, 4.286912e-002, 4.621390e-002, 3.178914e-002, 2.113179e-002, 1.067057e-002, 4.036730e-004, -7.295957e-004, 4.809907e-003, -6.749946e-003, -1.263475e-002, -3.848152e-003, 2.082062e-003, 1.056085e-002, 2.263825e-002, 3.371700e-002, 3.213805e-002, 2.584609e-002, 3.816932e-002, 3.584450e-002, 1.231198e-002, 1.227187e-002, 3.898566e-002, 2.988903e-002, -3.308535e-002, -1.853994e-002, -4.733498e-004, 1.598450e-002, 1.105314e-002, 2.579267e-003, 1.515902e-002, 1.310511e-003, -4.258290e-002, -7.003042e-003, 2.444889e-002, 1.923965e-002, -5.694694e-003, -2.195140e-002, -8.022613e-003, 7.434115e-003, -2.865467e-003, -1.350793e-002, 8.275184e-003, 1.772296e-003, 2.745976e-003, 1.200130e-002, 2.060847e-002, 2.819416e-002, 1.546322e-002, 2.173822e-003, 2.025875e-003, 7.869825e-003, 1.761948e-002, 1.829012e-002, 1.482872e-002, 7.545392e-003, 7.945804e-003, 5.193768e-003, -2.056792e-003, -8.783525e-003, -2.702930e-003, 1.053408e-002,


© ISO/IEC 2004 — All rights reserved

Copyright International Organization for Standardization
Provided by IHS under license with ISO
No reproduction or networking permitted without license from IHS
Not for Resale

2.467037e-002, 3.306032e-002, 5.013413e-002, 4.616403e-002, 2.242788e-002, 2.174200e-002, 4.571902e-002, 1.676242e-002, -3.296362e-002, -1.718439e-002, 1.361292e-004, 1.239679e-002, 8.720778e-003, 2.031794e-003, 4.107581e-003, 4.377204e-003, -2.698283e-002, 7.712149e-004, 2.487299e-002, 2.236026e-002, -8.646176e-003, -2.822051e-002, -2.794586e-004, 1.315248e-002, 7.214241e-003, -6.732013e-003, 4.594150e-003, 3.512645e-004, -1.871747e-003, 4.275629e-003, 1.071112e-002, 5.766372e-003, -1.550810e-002, -1.611966e-002, -9.990334e-004, 1.438787e-002, 2.170322e-002, 2.007222e-002, 1.083930e-002, 6.461601e-003, 1.812564e-003, -9.952320e-003, -2.420106e-002, -2.967404e-002, -2.279095e-002, -1.934798e-002, -1.722714e-003, 3.021108e-002, 4.887765e-002, 4.296225e-002, 2.020189e-002, 2.203626e-002, 3.848087e-002, 5.096582e-003, -1.713798e-002, -9.247429e-003, -4.203544e-003, 1.393677e-002, 1.200799e-002, -7.799375e-004, -4.800355e-003, -6.780055e-004, -1.257235e-002, 2.275712e-003, 1.635868e-002, 1.626036e-002, -2.452181e-003, -1.404539e-002, 5.309895e-003, 1.095610e-002, 1.507423e-002, 7.338626e-003, -7.194192e-003, 2.113136e-003, -4.690870e-003, -4.579766e-003, 4.925940e-003, 9.843878e-003, 1.813110e-003, -9.211327e-004, 1.003931e-002, 2.626288e-002, 3.466619e-002, 3.510290e-002, 2.965203e-002, 2.318503e-002, 1.471899e-002, 8.214652e-003, 1.184066e-003, -1.424592e-002, -2.008347e-002, -1.791419e-002, -1.489864e-003, 3.209293e-002, 4.195781e-002, 3.012751e-002, 8.836138e-003, 1.381769e-002, 1.590414e-002, -9.166842e-004, 2.822668e-003, 1.626667e-003, -7.895836e-003, 1.685227e-002, 1.886611e-002, 1.070249e-002, -1.160231e-002, -8.956246e-003, -1.076834e-002, 3.509368e-003, 5.563365e-003, 4.764183e-003, -3.658233e-003, -4.547177e-003, 2.659389e-003, 4.171866e-003, 1.461536e-002, 1.801520e-002, -1.296170e-002, 9.075742e-004, -2.343680e-003, -5.139287e-003, 5.861282e-003, 2.149610e-002, 2.150514e-002, 1.129380e-002, 5.934345e-003, 8.371133e-003, 1.353208e-002, 2.163339e-002, 2.338764e-002, 2.025529e-002, 1.877618e-002, 1.351874e-002, 1.026692e-002, 8.561875e-003, 2.990587e-003, 9.820854e-004, 6.892790e-003, 2.678384e-002, 2.854294e-002, 1.302462e-002, -4.834605e-004, -1.413271e-003, -1.047476e-002, 1.077885e-004, 1.419649e-002, -7.469597e-003, -2.176536e-002, 7.734255e-003, 8.629640e-003, -1.064988e-003, -1.674359e-002, -1.843050e-002, -9.045430e-003, 2.338459e-003, -5.375011e-003, -4.753324e-003, -4.060906e-003, 1.160437e-003, 2.696931e-003, 1.075036e-003, 5.033834e-003, 1.985168e-002, -1.283670e-003, 1.455065e-003, 1.791186e-003, -1.773603e-003, 4.496562e-003, 2.200085e-002, 2.036435e-002, 5.954782e-003, -6.761198e-003, -1.093529e-002, -3.081077e-003, 9.703005e-003, 1.639932e-002, 1.429214e-002, 1.254836e-002, 1.054612e-002, 9.201091e-003, 9.200499e-003, 5.299765e-003, 3.359252e-003, 5.221998e-003, 1.328827e-002, 7.405095e-003, -1.061160e-002, -9.290402e-003, -2.141233e-002, -2.199796e-002, 8.874996e-003, 9.445800e-003, -2.430863e-002, -3.228655e-002, 3.644628e-004, -3.082873e-003, -9.245477e-003, -7.825305e-003, -7.264282e-003, -3.985731e-004, 1.366613e-003, -1.000717e-002, -1.101952e-002, -6.141977e-003, 4.496332e-003, 1.087611e-002, 1.392490e-002, 4.818059e-004, 4.305968e-003, 1.011828e-002, 8.652735e-003, -2.093084e-003, -6.995466e-003, 1.348618e-003, 1.894388e-002, 2.416165e-002, 1.163292e-002, -7.553054e-003, -1.444998e-002, -6.186479e-003, 1.833707e-003, 6.614598e-003, 8.262032e-003, 7.357252e-003, 7.771356e-003, 6.829057e-003, 7.744636e-003, 6.263423e-003, 3.802721e-004, -3.032501e-003, -5.374398e-003, -1.526695e-002, -1.750269e-002, -2.102143e-002, -3.294070e-002, -1.078520e-002, 1.947969e-002, 1.019408e-003, -2.825589e-002, -1.577895e-002, 3.438148e-003, -6.875653e-003, -6.032370e-003, 4.880235e-003, 5.773532e-003, 2.661871e-003, 2.293622e-003, -3.045328e-003, -1.205072e-002, -1.447181e-002, 5.845961e-003, 3.067742e-002, 3.232232e-002, 2.383492e-003, -1.036284e-002, -8.001718e-005, 1.194654e-002, -6.446942e-004, -8.667467e-003, -3.461088e-003, 1.084831e-002, 2.251255e-002, 1.759695e-002, 3.414419e-003, -1.087167e-002, -1.438693e-002, -1.221161e-002, -9.042427e-003, -6.187243e-003, -3.244338e-005, 5.097666e-003, 7.231226e-003, 4.750019e-003, 2.950619e-003, -1.575513e-003, -1.116890e-002, -1.614411e-002, -1.637503e-002, -1.147829e-002, -2.499334e-002, -3.354450e-002, 4.380727e-003, 2.903876e-002, 3.861941e-003, -1.696717e-002, 5.359080e-003, 6.947276e-003, -6.455725e-003, 1.103206e-003, 9.692921e-003, 8.890716e-003, 9.569711e-003, -1.809225e-003, -7.730626e-003, -1.264504e-002, -2.034549e-002, 4.444432e-003, 3.727959e-002, 2.563054e-002, -3.564839e-003, -9.324417e-003, -1.580358e-002, -1.932513e-003, 5.388246e-004, -6.952378e-003, -4.911285e-003, 2.506791e-003, 1.550515e-002, 2.132673e-002, 9.698962e-003, -6.517533e-003, -1.712705e-002, -1.761018e-002, -1.443816e-002, -1.086898e-002, -4.722534e-003, 1.436290e-003, 3.625139e-003, 2.618814e-003, 5.173617e-003, -1.339064e-003, -1.241688e-002, -1.433651e-002, -8.099357e-003, 1.343847e-003, -1.407583e-002, -2.659803e-002, -2.559509e-003, 2.345996e-002, 5.010809e-003, -5.538053e-003, 1.445645e-002, 5.923298e-003, 2.078513e-003, 1.157226e-002, 1.204949e-002, 5.698984e-003, -9.668962e-004, -1.261326e-002, -6.022363e-003, -6.519740e-003, -1.342380e-002, 1.439667e-003, 7.550481e-003, -4.540545e-003, -1.591133e-002, -8.029376e-003, -6.754754e-003, -1.134327e-002, 2.888405e-004, -2.272244e-003, -7.131922e-003, -8.642657e-003, -4.559817e-004, 5.914907e-003, 2.832684e-004, -1.134777e-002, -2.627978e-002, -3.237808e-002, -2.901694e-002, -2.272348e-002, -1.625922e-002, -8.479738e-003, -4.894769e-003, -1.365498e-003, 7.627950e-003, 2.910490e-003, -1.388374e-002, -1.167531e-002, -9.331124e-004, 1.061097e-002, -2.758700e-003, -1.740268e-002, -2.984790e-002, -5.409894e-003, -3.357375e-003, -1.525764e-003, 5.903197e-003, -1.057142e-002, -9.958887e-003, 9.129162e-003, 5.969052e-003, -2.807206e-003, -

© ISO/IEC 2004 — All rights reserved


Copyright International Organization for Standardization
Provided by IHS under license with ISO
No reproduction or networking permitted without license from IHS
Not for Resale

1.143723e-002, -1.995596e-002, -7.011203e-003, -6.402608e-003, -1.136629e-002, -7.144099e-003, -4.984466e-003, -2.254650e-002, -2.726561e-002, -8.528667e-005, 4.909784e-003, -1.089036e-002, -5.494252e-003, 6.715822e-003, 2.075104e-003, -1.106884e-002, -1.039944e-002, -1.005378e-002, -1.595311e-002, -2.342192e-002, -3.534872e-002, -4.200563e-002, -4.096978e-002, -3.225862e-002, -2.310612e-002, -1.846793e-002, -1.453784e-002, -9.017886e-003, 5.345889e-004, -9.230577e-004, -1.273586e-002, -1.210509e-002, -2.489045e-003, 5.445815e-003, -8.157924e-004, -1.460250e-002, -3.628460e-002, -2.824432e-002, -2.515399e-002, -1.911744e-002, -5.896336e-003, -1.789163e-002, -2.149953e-002, -9.611281e-003, -1.061762e-002, -2.601628e-002, -2.896119e-003, -5.674950e-003, 6.137546e-003, 1.812579e-003, 5.556265e-004, 7.788679e-003, 1.963016e-002, -4.270769e-003, -7.811160e-003, 1.833665e-002, 2.357130e-002, 7.739505e-003, 5.137115e-003, 1.934643e-002, 2.672792e-002, 9.348375e-003, 2.887569e-003, -3.318118e-003, -1.375735e-002, -1.616000e-002, -1.859335e-002, -2.185158e-002, -2.198717e-002, -1.660320e-002, -1.298834e-002, -6.813719e-003, -1.951079e-003, 3.816074e-003, 1.129852e-002, 6.313002e-003, 2.148091e-003, 2.825200e-004, 5.852053e-003, 7.920315e-004, -6.110883e-004, -4.998673e-003, -1.898927e-002, -1.177488e-002, -1.648153e-002, -1.530552e-002, -1.551079e-002, -2.460192e-002, -1.994586e-002, -1.374752e-002, -1.686118e-002, -4.140727e-002, 1.263932e-002, 5.524740e-003, 1.567344e-002, -3.603968e-003, -7.486318e-003, -5.297172e-004, 8.074769e-003, -6.249337e-003, -1.000491e-002, 2.998681e-003, 1.004758e-002, 8.598445e-004, -1.099114e-002, -3.020713e-003, 8.269773e-003, 2.988543e-003, -9.674794e-003, -2.112896e-002, -3.452905e-002, -2.923526e-002, -2.529168e-002, -2.300738e-002, -2.265435e-002, -1.815726e-002, -1.664651e-002, -1.483955e-002, -1.206102e-002, -5.079805e-003, 3.375113e-002, 2.990902e-002, 3.093540e-002, 3.332127e-002, 2.252350e-002, 1.655902e-002, 2.188813e-002, 2.584953e-002, 2.317340e-002, 2.969371e-002, 2.796573e-002, 2.664989e-002, 3.477624e-002, 1.594469e-002, 8.035940e-003, 1.050456e-002, 1.304085e-002, -1.092170e-002, 2.760809e-002, 9.785180e-003, -7.627704e-003, -4.128521e-003, -5.991645e-003, 6.798216e-003, 1.393065e-002, 6.112776e-005, -8.714567e-003, -6.885745e-003, 1.406118e-003, 8.843347e-003, -5.515751e-003, -1.548098e-002, -6.623496e-004, 6.095029e-003, 7.012624e-003, -3.119348e-003, -1.631969e-002, -1.010294e-002, -2.034349e-003, 4.603095e-003, 1.278579e-002, 1.703281e-002, 1.549447e-002, 1.429843e-002, 1.107570e-002, 7.887743e-003, 8.285411e-003, 1.027819e-002, 1.582006e-002, 1.125123e-002, 8.244737e-005, -4.291389e-003, -1.686901e-003, 1.144217e-002, 1.654161e-003, 1.036031e-002, 1.163922e-002, 1.705574e-002, 2.264635e-002, 5.353572e-003, -2.910655e-003, -4.960336e-003, 1.088486e-002, -5.614335e-003, 2.340709e-002, 3.407312e-004, -2.081555e-002, -5.005301e-003, -7.614804e-003, -9.069789e-003, 8.178992e-003, 7.426304e-003, 5.509575e-003, -4.008976e-003, 5.881866e-003, 1.163748e-002, 4.474849e-003, -1.933564e-002, -1.668918e-002, -2.212176e-003, 6.702047e-003, 3.716967e-003, -1.185930e-002, -2.166239e-002, -1.766333e-002, -8.073151e-003, 2.484128e-004, 1.715364e-003, -1.251081e-005, -8.247812e-003, -1.692890e-002, -2.129608e-002, -2.138019e-002, -1.611612e-002, -1.147749e-002, -9.797646e-003, -1.328628e-002, -1.185134e-002, -5.936473e-003, 5.574134e-003, -1.628753e-002, -1.540373e-002, -1.061025e-002, 2.056832e-003, -3.233506e-003, -1.431457e-002, -2.679240e-002, -2.023586e-002, 1.166649e-002, 7.719143e-003, 5.433486e-003, -1.151974e-002, -1.873322e-002, 5.171986e-003, -5.492138e-003, -6.636034e-004, 1.537594e-002, 2.194380e-002, 2.302431e-002, 1.729520e-002, 1.126696e-002, 1.867318e-002, 2.702347e-002, 3.475438e-003, -6.444072e-003, -1.012683e-004, 1.316862e-002, 1.876491e-002, 1.458467e-002, 2.049687e-003, -4.793344e-003, -7.333339e-003, -7.499249e-003, -6.899371e-003, -1.016535e-002, -1.241220e-002, -1.829051e-002, -2.246014e-002, -2.237040e-002, -1.638874e-002, -9.810446e-003, -9.250605e-003, -1.397087e-002, -1.047629e-002, 1.946876e-003, 2.185111e-003, -1.768577e-002, -1.210504e-002, -1.014329e-002, -8.977196e-004, -2.369784e-003, -1.584047e-002, -2.532106e-002, -2.554674e-002, 7.594016e-004, 1.042328e-002, 8.762024e-003, 6.176624e-003, 1.179241e-003, -6.882688e-003, -1.829572e-002, -2.604583e-002, -2.029097e-002, -1.094950e-002, -4.470036e-003, -4.102316e-003, -2.488199e-002, -1.975251e-002, 4.232084e-003, -4.108758e-003, -2.281857e-002, -2.733965e-002, -1.846554e-002, -7.080103e-003, -3.060412e-003, -2.415307e-003, -3.642880e-003, -6.399280e-003, -9.799938e-003, -1.175559e-002, -1.238952e-002, -9.064338e-003, -9.112230e-003, -6.782518e-003, -4.820647e-003, 2.599772e-003, 8.901773e-003, 5.132833e-003, 4.631727e-003, 5.045815e-003, 1.539485e-002, 1.945657e-002, -3.272959e-003, 7.761255e-003, 3.921827e-003, 4.200627e-003, 7.662038e-003, 3.339550e-003, 1.162699e-002, 4.874254e-003, 2.009747e-002, 2.169064e-002, 6.612154e-002, 6.178636e-002, 5.082899e-002, 3.173042e-002, 1.733048e-002, 3.288819e-003, -3.243181e-003, 2.714227e-003, 1.726555e-002, 1.365910e-002, -2.481949e-002, -2.464416e-002, 9.602795e-004, -1.168362e-004, -1.703855e-002, -2.848355e-002, -2.569428e-002, -2.016833e-002, -1.730937e-002, -1.739536e-002, -1.710200e-002, -1.503312e-002, -1.517625e-002, -1.301168e-002, -9.276573e-003, -4.984070e-003, -2.003168e-004, -5.623394e-003, -5.507537e-003, -5.255395e-003, -1.138204e-002, -1.860261e-002, -2.713621e-002, -3.358264e-002, -3.460393e-002, -3.020276e-002, -4.630415e-002, -2.794702e-002, -1.408278e-002, -1.315508e-002, -1.211195e-002, -1.732257e-003, 1.400867e-002, 3.246400e-002, 5.152212e-002, 5.115459e-002},
{-1.111224e-002, -1.423941e-003, 9.194026e-003, 9.907228e-003, -1.136996e-003, -1.277485e-002, 1.962125e-003, 1.734277e-002, 2.728784e-002, 2.119495e-002, 9.364378e-003, 2.363040e-003, -3.884977e-003, -1.091225e-002, -1.779360e-002, -2.114379e-002, -


© ISO/IEC 2004 — All rights reserved

Copyright International Organization for Standardization
Provided by IHS under license with ISO
No reproduction or networking permitted without license from IHS
Not for Resale

2.671594e-002, -2.459040e-002, -1.696377e-002, -4.375302e-003, 4.212914e-003, 1.323450e-002, 1.589660e-002, 1.809666e-002, 1.840359e-002, 1.640306e-002, 1.323189e-002, 9.977127e-003, 6.482770e-003, -1.100006e-003, -1.093053e-002, -2.149081e-002, -2.016691e-002, -1.328808e-002, -1.427567e-003, 8.063289e-003, 2.436936e-003, -1.626653e-002, -3.029119e-002, -1.783262e-002, -1.247280e-003, 7.945871e-003, 1.900782e-002, 6.357466e-003, 3.148238e-003, 1.090696e-003, -1.952405e-002, -5.559771e-003, 3.275232e-003, -1.552971e-003, -2.194750e-002, -2.528033e-002, -8.340450e-003, 5.962385e-003, -3.036923e-003, -1.241688e-002, -5.595606e-003, -1.629653e-003, -1.105958e-002, -1.536163e-002, -1.961471e-002, -2.512582e-002, -2.336258e-002, -1.733979e-002, -7.588836e-003, 8.309722e-003, 1.968837e-002, 2.572820e-002, 3.484976e-002, 3.931273e-002, 3.790054e-002, 3.067209e-002, 2.210307e-002, 1.865010e-002, 1.357700e-002, 8.871598e-003, 4.123808e-003, -8.750676e-004, -9.504773e-003, -2.159819e-002, -2.118811e-002, -1.078715e-002, -3.753018e-003, -9.844230e-003, -3.247725e-002, -3.806625e-002, -2.675370e-002, -2.264940e-002, -1.085500e-002, -6.407583e-003, -1.855993e-004, 1.173176e-004, -2.605064e-002, -4.050884e-003, 5.784281e-003, 6.639813e-004, -1.436667e-002, -7.179778e-003, 3.348696e-003, -4.981656e-003, -2.038470e-002, -1.166219e-002, 7.910653e-004, -3.731443e-003, -7.432894e-003, -1.510870e-002, -1.728996e-002, -2.502888e-002, -2.906180e-002, -2.794213e-002, -1.880060e-002, -5.842380e-003, 3.433569e-004, 5.347387e-003, 1.489269e-002, 2.122629e-002, 2.131371e-002, 1.887472e-002, 1.022916e-002, 3.476092e-005, -9.036798e-003, -1.248864e-002, -1.474005e-002, -9.354166e-003, -1.795784e-003, -1.291721e-003, -5.172276e-003, -1.332468e-002, -3.138858e-003, 1.420660e-002, 8.607264e-003, -1.410326e-003, -1.543129e-003, -6.523859e-005, 3.602071e-003, 3.237042e-003, 1.090505e-002, 8.833914e-003, -2.378057e-002, 7.626903e-004, 1.312145e-002, 5.776201e-003, -2.359212e-003, 3.700934e-003, 7.306080e-003, -1.413142e-002, -6.117259e-003, 6.659102e-003, 1.046537e-002, 1.090360e-002, 1.716611e-003, -2.126613e-003, -1.106275e-002, -2.302271e-002, -2.698286e-002, -2.607868e-002, -2.231587e-002, -1.025754e-002, -3.414010e-003, 1.402374e-003, 1.412495e-002, 2.236004e-002, 2.549774e-002, 2.453632e-002, 1.622182e-002, 5.843329e-004, -1.455994e-002, -1.610645e-002, -1.793676e-002, -1.779337e-002, -1.251215e-002, 4.138669e-004, 1.228036e-002, 1.396547e-002, 8.889289e-003, 1.390215e-002, 2.026434e-002, 7.858632e-003, 1.140002e-002, 1.539952e-002, 1.355843e-002, 1.089392e-002, 1.821671e-002, 1.114462e-002, -2.971018e-002, 1.948006e-003, 1.727722e-002, 3.727202e-003, 4.747048e-004, 1.439382e-002, 3.199792e-003, -4.271612e-003, 8.952639e-003, 1.272107e-002, 1.473890e-002, 8.773101e-003, 9.491992e-003, -7.063808e-004, -1.334825e-002, -2.401393e-002, -2.767256e-002, -2.330373e-002, -1.908356e-002, -1.074313e-002, 1.573072e-003, 8.766949e-003, 1.836354e-002, 2.767839e-002, 3.520004e-002, 3.997178e-002, 3.864895e-002, 2.518824e-002, 1.558594e-003, -1.580617e-002, -1.585643e-002, -1.355263e-002, -1.104179e-002, -4.013872e-003, 1.235308e-002, 2.412474e-002, 3.268318e-002, 2.041680e-002, 2.025004e-002, 8.559197e-003, 1.010582e-002, 2.075791e-002, 2.256896e-002, 1.488793e-002, 2.348296e-002, 1.403943e-002, -2.484827e-002, 8.948291e-003, 1.504173e-002, 9.546193e-004, -1.392846e-002, 8.133922e-003, -2.504748e-003, -4.910154e-003, 4.806112e-005, 3.335723e-003, 1.376318e-003, 2.990539e-003, -1.285053e-003, -2.158137e-002, -2.913061e-002, -2.947397e-002, -2.716519e-002, -2.811648e-002, -2.359554e-002, -1.291437e-002, -3.036505e-003, 8.223845e-003, 1.543322e-002, 2.337265e-002, 3.369726e-002, 3.814316e-002, 3.769757e-002, 2.876190e-002, 1.373403e-002, -1.199740e-002, -2.727348e-002, -3.126849e-002, -2.408263e-002, -1.489173e-002, -1.217778e-002, -3.573340e-003, 4.756218e-003, 6.884149e-003, -5.621197e-003, -2.044382e-002, -2.081059e-002, -1.032370e-002, -3.916687e-004, -8.503217e-003, -7.326586e-003, -1.128094e-002, -2.478076e-002, 1.398982e-002, 1.180055e-002, -3.034809e-003, -1.355966e-002, 1.416955e-002, -9.292533e-004, 3.697561e-004, 3.551288e-003, 4.133825e-003, 2.839519e-003, 7.194751e-003, -6.573790e-003, -2.015333e-002, -2.124913e-002, -2.190348e-002, -2.610507e-002, -2.349769e-002, -1.427129e-002, 1.564138e-003, 1.697230e-002, 2.694673e-002, 3.203182e-002, 3.485146e-002, 4.046261e-002, 4.194211e-002, 3.259735e-002, 1.719070e-002, 8.577262e-003, -2.249195e-003, -1.781732e-002, -2.733583e-002, -2.499360e-002, -1.355139e-002, -4.335075e-003, -6.500901e-003, -4.949233e-003, -4.404642e-003, -6.271006e-003, -2.093843e-002, -2.259635e-002, -1.766047e-002, 5.215127e-005, -5.355140e-003, -1.054561e-002, -1.348084e-002, -1.731474e-002, 2.086393e-002, 8.090190e-003, -8.718673e-003, -6.421580e-003, 1.307212e-002, -3.603245e-003, 7.331505e-003, 4.882879e-003, -1.146017e-003, 6.234104e-003, 3.270743e-003, -1.221743e-002, -1.769443e-002, -2.274327e-002, -2.937956e-002, -3.420866e-002, -3.047858e-002, -1.839047e-002, -1.010485e-003, 1.588949e-002, 3.365043e-002, 4.488621e-002, 4.341328e-002, 3.975597e-002, 3.140074e-002, 1.476923e-002, -2.868896e-003, -1.283130e-002, -1.808334e-002, -2.582392e-002, -2.626685e-002, -2.250295e-002, -1.922116e-002, -7.062151e-003, 1.819209e-003, -9.843518e-003, -1.662465e-002, -1.086006e-002, -1.181568e-002, -2.338259e-002, -1.962709e-002, -7.743791e-003, -2.837812e-003, -7.345462e-003, -1.617054e-002, -5.720357e-003, 2.360259e-002, 7.918239e-004, -1.871959e-003, 3.297070e-003, 6.435212e-003, -5.141566e-003, 9.801048e-003, -2.967203e-003, -1.886654e-003, 7.651992e-003, 9.665916e-004, -8.191516e-003, -2.179680e-002, -3.586551e-002, -4.826560e-002, -5.186485e-002, -4.559924e-002, -3.194404e-002, -1.128106e-002, 1.399971e-002, 4.138213e-002, 5.638489e-002, 5.400561e-002, 4.250069e-002, 2.771609e-002, 6.547167e-003, -1.643598e-002, -3.103902e-002, -3.858335e-002, -3.911850e-002, -3.495522e-002, -

© ISO/IEC 2004 — All rights reserved


--`,,```,,,,````-`-`,,`,,`,`,,`---

Copyright International Organization for Standardization
Provided by IHS under license with ISO
No reproduction or networking permitted without license from IHS
Not for Resale

2.334950e-002, -2.111658e-002, -1.352725e-002, -1.564031e-003, -6.090235e-003, -2.286302e-002, -2.103160e-002, -1.064563e-002, -1.491085e-002, -1.315631e-002, -7.913892e-003, 1.700279e-003, 1.317339e-003, -1.512619e-002, 2.944729e-003, 1.936665e-002, -5.391179e-003, 1.412776e-002, 1.506129e-002, -1.334254e-003, 5.581865e-005, 4.325258e-003, -5.133908e-003, 6.554613e-003, 1.624154e-002, 5.563768e-003, -1.295567e-002, -2.916808e-002, -4.254751e-002, -5.849314e-002, -6.229643e-002, -5.495882e-002, -3.467979e-002, -5.362098e-003, 2.452510e-002, 5.615315e-002, 7.154051e-002, 7.138303e-002, 5.689342e-002, 3.534493e-002, 8.483073e-003, -1.525041e-002, -3.602672e-002, -4.850748e-002, -5.150583e-002, -4.438473e-002, -2.622343e-002, -1.503949e-002, -1.719947e-002, -4.463961e-003, 1.198498e-003, -1.565911e-002, -2.536200e-002, -1.363831e-002, -2.914812e-003, -1.062970e-003, -8.193591e-004, 2.803713e-003, 7.361486e-003, -7.892369e-003, 2.404498e-003, 1.876024e-003, -2.781952e-003, 2.644139e-002, 1.672907e-002, 2.309808e-003, 5.801481e-003, -4.062906e-004, -3.363986e-003, 1.209599e-002, 2.590088e-002, 8.989056e-003, -1.173919e-002, -3.066051e-002, -4.564191e-002, -5.259553e-002, -5.346661e-002, -4.583753e-002, -2.453984e-002, 6.976947e-003, 3.855229e-002, 6.757424e-002, 8.122965e-002, 7.915763e-002, 6.519901e-002, 4.184792e-002, 1.281336e-002, -1.127922e-002, -3.139174e-002, -4.914232e-002, -5.275503e-002, -3.981477e-002, -2.264220e-002, -9.933138e-003, -1.047490e-002, -6.839245e-003, 7.911321e-003, 1.727199e-003, -1.794231e-002, -1.152339e-002, 6.387616e-003, 5.959247e-003, 6.080786e-003, 8.418094e-003, 1.319593e-002, -1.138368e-003, 1.078777e-003, 2.342529e-003, -5.056371e-004, 2.656680e-002, 1.235479e-002, 5.018693e-003, 8.155517e-003, -3.263258e-003, -3.593480e-004, 2.084248e-002, 2.313221e-002, 1.167880e-002, -3.409893e-003, -2.009766e-002, -3.092562e-002, -3.543232e-002, -3.579783e-002, -2.641833e-002, -5.046892e-003, 2.222225e-002, 4.887461e-002, 6.951322e-002, 7.958791e-002, 7.955363e-002, 6.549141e-002, 3.898572e-002, 1.300609e-002, -1.347533e-002, -3.313616e-002, -4.849464e-002, -5.011539e-002, -3.446715e-002, -2.014072e-002, -6.197552e-003, -5.690838e-003, -2.472375e-003, 8.455490e-003, 1.300015e-002, -5.353060e-003, -5.478480e-003, 1.474028e-002, 1.208336e-002, 1.262134e-002, 1.034084e-002, 1.538083e-002, 1.182616e-002, -2.385446e-004, 5.213353e-004, -1.511298e-003, 8.019167e-004, 1.964495e-003, 6.798720e-003, 4.681242e-003, -1.842901e-003, 5.945996e-003, 1.935204e-002, 1.730401e-002, 1.726401e-002, 7.515706e-003, -5.189071e-003, -1.596527e-002, -2.395769e-002, -2.161500e-002, -1.327246e-002, 7.286220e-003, 2.754482e-002, 5.055537e-002, 6.135068e-002, 6.415637e-002, 5.914194e-002, 4.398928e-002, 2.505826e-002, 1.627434e-003, -2.302235e-002, -4.108648e-002, -5.004609e-002, -5.013395e-002, -3.722324e-002, -2.606918e-002, -1.070542e-002, -5.173070e-003, 5.784425e-004, 7.036444e-003, 2.053186e-002, 8.711289e-003, 2.302103e-003, 2.214300e-002, 1.604475e-002, 1.357041e-002, 8.839420e-003, 1.051770e-002, 1.776231e-002, -6.189981e-004, -6.950929e-003, -1.124100e-002, -7.503682e-003, -4.392441e-003, -4.692604e-003, -1.905642e-003, -9.409979e-004, 7.594266e-003, 1.447264e-002, 1.411182e-002, 2.159977e-002, 1.449593e-002, 6.861259e-003, -4.501349e-003, -1.067225e-002, -7.547172e-003, 2.859754e-003, 1.582173e-002, 2.834363e-002, 4.271528e-002, 4.679410e-002, 4.054685e-002, 3.001751e-002, 1.328959e-002, -2.680559e-003, -1.752515e-002, -3.890706e-002, -5.259959e-002, -5.877707e-002, -5.870444e-002, -4.816752e-002, -3.436360e-002, -2.455145e-002, -1.024298e-002, 2.165231e-003, 5.282040e-003, 1.956734e-002, 1.790957e-002, 7.349206e-003, 2.238977e-002, 1.786723e-002, 4.354942e-003, 7.031708e-003, 8.488682e-003, 1.667389e-002, 2.303319e-003, -1.345158e-002, -1.132474e-002, -6.981697e-003, -7.201414e-003, -1.656465e-002, -4.409123e-003, 5.739751e-003, 5.271612e-003, 5.080242e-003, 1.439619e-002, 2.353681e-002, 1.994068e-002, 1.109733e-002, 4.768228e-003, 3.010559e-003, 8.688657e-003, 1.913302e-002, 2.615712e-002, 3.179074e-002, 3.470398e-002, 3.084314e-002, 2.109171e-002, 6.466894e-003, -9.257124e-003, -2.306987e-002, -3.541988e-002, -4.741941e-002, -5.622258e-002, -5.965067e-002, -5.795296e-002, -5.020214e-002, -3.860258e-002, -2.487354e-002, -1.005396e-002, 7.636063e-003, 8.408766e-003, 1.408348e-002, 2.385414e-002, 9.587657e-003, 1.801919e-002, 1.515461e-002, -5.411426e-003, -1.824127e-003, 7.061030e-003, 1.418022e-002, 7.059932e-004, -1.096321e-002, -4.420982e-003, -3.290550e-003, -8.715485e-003, -2.359772e-002, -9.141230e-004, 9.857710e-003, 6.822662e-003, 4.540950e-003, 1.477664e-002, 2.575298e-002, 2.467256e-002, 1.619444e-002, 1.435364e-002, 2.136203e-002, 2.984027e-002, 3.192443e-002, 3.209742e-002, 3.190939e-002, 2.772636e-002, 2.046620e-002, 8.549497e-003, -3.381503e-003, -1.656855e-002, -2.753841e-002, -3.479941e-002, -4.031021e-002, -4.359352e-002, -4.246892e-002, -4.377257e-002, -3.944217e-002, -2.786554e-002, -1.301589e-002, 8.184332e-004, 1.840245e-002, 2.104232e-002, 1.655810e-002, 1.950147e-002, 1.199538e-002, 1.267314e-002, 1.412912e-002, -2.124638e-003, -1.920777e-003, 5.494037e-003, 5.242779e-003, 3.625792e-003, 1.781871e-003, 1.207632e-002, 5.341107e-003, -1.054321e-002, -2.404982e-002, 1.842823e-003, 1.330089e-002, 1.207227e-002, 9.801354e-003, 1.494237e-002, 2.174059e-002, 1.764689e-002, 1.275810e-002, 1.898336e-002, 2.926963e-002, 3.655586e-002, 3.914791e-002, 3.161100e-002, 2.653122e-002, 1.880724e-002, 8.694294e-003, 2.323313e-003, -6.622896e-003, -1.670118e-002, -2.574548e-002, -2.842977e-002, -3.213042e-002, -3.186116e-002, -2.710085e-002, -2.765522e-002, -2.395780e-002, -1.603548e-002, -3.884764e-003, 1.270946e-002, 3.387792e-002, 4.037569e-002, 2.646825e-002, 1.690158e-002, 9.202666e-003, 6.456313e-003, 8.790921e-003, 4.352563e-005, -2.830866e-003, 4.487987e-003, 4.635564e-003, 1.304719e-002, 2.006269e-002,


© ISO/IEC 2004 — All rights reserved

Copyright International Organization for Standardization
Provided by IHS under license with ISO
No reproduction or networking permitted without license from IHS
Not for Resale

2.620942e-002, 1.321076e-002, -7.354938e-003, -2.363372e-002, 2.666530e-003, 1.505007e-002, 1.122545e-002, 6.852156e-003, 1.145163e-002, 5.583192e-003, -6.506182e-003, -1.440050e-002, -5.429652e-003, 3.458168e-003, 7.383209e-003, 1.405391e-002, 1.580785e-002, 1.158588e-002, 6.679562e-003, -7.656148e-004, -2.442355e-003, -8.434969e-003, -1.667759e-002, -2.428381e-002, -2.348490e-002, -1.976649e-002, -2.142530e-002, -2.164524e-002, -2.570935e-002, -2.939286e-002, -3.412756e-002, -2.546726e-002, -1.808341e-004, 3.391859e-002, 5.194623e-002, 3.674172e-002, 1.451855e-002, 7.511162e-004, 1.067500e-003, 2.415748e-003, 8.901328e-003, -1.568384e-004, 5.656743e-003, 3.661749e-003, 2.288398e-002, 3.196861e-002, 3.166432e-002, 1.859283e-002, -2.749243e-003, -2.259894e-002, 6.322195e-003, 1.625990e-002, 1.726711e-003, -2.590153e-003, 5.466126e-004, -8.949480e-003, -2.617955e-002, -2.724531e-002, -6.283522e-003, 9.498658e-003, 1.142842e-002, 7.855039e-003, 1.526041e-003, -7.127937e-003, -7.540609e-003, -8.283433e-003, -5.822842e-003, -7.877970e-003, -1.680228e-002, -2.093566e-002, -5.470846e-003, 1.004365e-002, 1.345527e-002, 1.491660e-002, 7.537272e-003, -1.354441e-002, -3.723265e-002, -5.162572e-002, -3.930948e-002, 1.337903e-003, 4.218475e-002, 4.112394e-002, 1.546792e-002, 4.822585e-004, -5.661626e-003, -3.169025e-003, 1.593229e-002, 4.446792e-003, 7.684273e-003, 3.529750e-003, 3.152705e-002, 2.798551e-002, 2.991102e-002, 1.906553e-002, 6.170309e-003, -1.243627e-002, 1.511656e-002, 1.744840e-002, -9.974833e-003, -7.092377e-003, 3.028984e-003, -3.190963e-003, -1.490045e-002, -5.784267e-003, 2.316365e-002, 4.065942e-002, 4.117349e-002, 3.269194e-002, 1.238397e-002, -1.203129e-002, -2.442455e-002, -1.714188e-002, -7.897345e-003, -7.464255e-003, -1.457146e-002, -1.279438e-002, 1.091706e-002, 3.443028e-002, 4.707457e-002, 4.900239e-002, 4.082673e-002, 2.520399e-002, 9.635084e-005, -2.296103e-002, -4.319262e-002, -3.352605e-002, 1.195012e-002, 2.779740e-002, 1.211943e-002, 1.197143e-003, -5.695149e-003, -2.501364e-003, 1.772656e-002, 5.349013e-003, 5.199988e-003, -3.141649e-003, 3.337260e-002, 1.743407e-002, -1.944274e-002, 1.445324e-002, 6.506191e-003, -1.467705e-003, 2.812692e-002, 1.393457e-002, -8.002056e-003, 1.900686e-003, 3.149408e-003, -1.682663e-002, -3.462488e-002, -3.475178e-002, -1.981892e-002, -1.189502e-002, -9.718359e-003, -1.777230e-002, -2.976744e-002, -4.165193e-002, -4.457554e-002, -2.703997e-002, -1.194915e-002, -1.240363e-002, -1.924192e-002, -2.187265e-002, -1.209110e-002, -6.550948e-003, -1.152803e-004, 8.572502e-003, 1.470400e-002, 1.442151e-002, 1.635561e-003, -1.010074e-002, -1.645966e-002, -1.725991e-002, 5.534716e-003, 1.115539e-002, 3.724670e-003, 4.279888e-003, 4.816856e-003, 1.010345e-002, 2.465050e-002, 1.070237e-002, 8.606527e-003, -8.392435e-003, 3.598165e-003, 6.508609e-003, -3.317930e-002, 1.236368e-002, 1.430666e-002, 9.371058e-003, 3.549625e-002, 7.999396e-003, -1.097408e-002, -2.378852e-003, -1.056311e-002, -1.885996e-002, -1.496280e-002, -9.503577e-003, -3.703766e-003, -2.020271e-003, -1.266853e-003, -9.932564e-003, -2.241573e-002, -4.316002e-002, -5.342920e-002, -2.777617e-002, -1.532236e-003, -7.224120e-003, -1.220286e-002, -2.299841e-002, -3.114388e-002, -2.122408e-002, -6.635485e-003, 1.412670e-002, 3.126328e-002, 4.097256e-002, 3.774473e-002, 2.189242e-002, 4.494579e-003, -1.630029e-003, 4.701543e-003, 5.332991e-004, -7.139936e-003, -1.067191e-003, 1.072885e-002, 1.916264e-002, 2.699729e-002, 9.579396e-003, 1.254830e-002, -7.366097e-003, -7.698311e-003, -4.643784e-003, -4.272679e-002, 1.043191e-002, 1.566525e-002, 7.928433e-003, 2.679165e-002, 4.133639e-003, -1.383495e-002, -1.776402e-002, -1.038694e-002, 5.941724e-003, 1.483765e-002, 6.938775e-003, -1.336565e-002, -2.337718e-002, -2.193599e-002, -7.563725e-003, -7.324941e-003, -2.772392e-002, -4.216858e-002, -3.140088e-002, -1.389977e-002, -1.870864e-002, -1.501161e-002, -9.612628e-003, -1.873551e-002, -9.099728e-003, 7.992830e-003, 2.326482e-002, 3.620519e-002, 4.634362e-002, 5.293222e-002, 4.209256e-002, 2.462108e-002, 6.226361e-003, -8.029191e-003, -1.982832e-002, -1.352168e-002, -1.220855e-002, 1.098213e-002, 2.006801e-002, 1.617088e-002, -2.230984e-003, -5.934053e-003, -2.519756e-002, -9.535847e-003, -9.520890e-003, -5.011174e-002, 6.228314e-003, 1.352451e-002, 4.935049e-003, 6.422690e-003, -1.437107e-002, -2.724914e-002, -1.794915e-002, 1.017527e-002, 3.111197e-002, 3.322150e-002, 9.814944e-003, -1.726522e-002, -3.355509e-002, -1.281392e-002, 3.103058e-002, 5.636679e-003, -2.292745e-002, -3.898120e-002, -4.428647e-002, -5.900121e-002, -6.206296e-002, -3.278257e-002, -1.261186e-002, -6.220801e-003, -1.906835e-003, 1.301913e-002, 1.986078e-002, 7.012281e-003, 3.587912e-002, 5.528769e-002, 4.195333e-002, 2.195595e-002, 7.421766e-003, -1.377341e-002, -3.683456e-002, -2.595726e-002, -2.598404e-002, 1.822198e-003, 8.831930e-003, -6.200516e-004, -1.234755e-002, -1.218501e-002, -3.285113e-002, -2.163620e-002, -5.837023e-003, -4.014910e-002, 1.145012e-002, 1.015946e-002, -2.880077e-003, -4.654217e-003, -1.371028e-002, -2.231767e-002, -1.157349e-002, 1.297586e-002, 3.009171e-002, 2.355950e-002, 4.181362e-002, 3.196010e-002, -7.867534e-003, 9.085676e-003, 6.011745e-002, 1.786229e-002, -3.020307e-002, -3.256670e-002, -4.855554e-002, -5.583931e-002, -6.001561e-002, -2.451564e-002, -3.385667e-002, -1.345468e-002, 4.385052e-003, 2.988882e-002, 3.543309e-002, 6.412834e-004, 2.226651e-002, 6.238490e-002, 4.567256e-002, 1.956122e-002, 6.308048e-003, -1.251516e-002, -3.922850e-002, -3.111029e-002, -3.364782e-002, -1.480436e-002, 3.368462e-003, -1.163643e-002, -1.267903e-002, -1.506052e-002, -1.167192e-002, -3.478627e-002, 2.811443e-003, -2.086953e-002, 1.407336e-002, 7.165542e-003, -1.715458e-002, -3.839931e-003, 4.823617e-003, -3.915413e-003, -5.985363e-003, 1.073555e-003, 1.249798e-002, 2.552306e-003, 4.330210e-004, -6.471789e-003, -2.007597e-002, -1.663266e-002, -1.356589e-002, -

© ISO/IEC 2004 — All rights reserved


Copyright International Organization for Standardization
Provided by IHS under license with ISO
No reproduction or networking permitted without license from IHS
Not for Resale

2.081204e-002, -2.770542e-002, -2.537625e-002, -3.109298e-002, -1.844167e-002, -3.407180e-002, -1.080442e-002, -2.710408e-002, -2.084179e-002, -1.059962e-002, -1.097243e-002, -1.740300e-002, -2.218847e-002, -1.025541e-002, 5.109941e-003, -4.077049e-003, -5.384585e-003, 6.967338e-003, -1.115594e-002, -2.641098e-002, -1.633171e-002, -2.058361e-002, -8.709143e-003, -1.817667e-003, -2.173665e-002, -5.126874e-003, -7.221276e-003, -4.115644e-003, -3.890308e-002, 1.065871e-002, -1.365720e-002, 1.281623e-002, 3.508916e-003, -2.653869e-002, -4.316225e-003, 2.380255e-002, 1.032174e-002, 4.896990e-003, -6.827187e-003, 7.079310e-004, -2.824127e-003, -5.439600e-003, -1.637987e-002, -2.309254e-002, -1.905272e-002, -1.568054e-002, -9.849609e-003, -4.021459e-004, -7.714325e-003, -3.612508e-003, 7.810610e-003, -1.401949e-002, -5.805462e-003, -4.306342e-003, -1.611652e-002, 3.673334e-003, -3.323282e-004, -1.641627e-002, -2.515733e-002, -2.298645e-002, -1.652723e-002, -8.948155e-003, 3.966514e-003, 4.347189e-003, -8.188387e-003, -1.181310e-002, 2.109524e-003, -5.970698e-003, 3.090257e-003, -4.807164e-003, -3.210039e-002, 1.792605e-003, 3.521780e-003, 5.248551e-003, -3.246919e-002, 2.100105e-002, -6.570109e-003, 6.675388e-003, 3.042974e-004, -1.757613e-002, -6.243080e-003, 2.813798e-002, 1.672235e-002, 6.563996e-003, -6.049498e-003, 7.292557e-004, 2.265759e-003, 6.752880e-003, 8.384455e-003, 9.212121e-003, 9.377635e-003, 9.612950e-003, 2.054452e-002, 1.942302e-002, 9.862781e-003, 2.107566e-002, 2.292682e-002, 6.027233e-003, 6.128949e-003, 1.347295e-002, -5.223391e-003, 1.365102e-002, 2.868804e-002, 2.299061e-002, 1.872008e-002, 1.681061e-002, 1.385500e-002, 1.363246e-002, 1.505334e-002, 1.048416e-002, -4.506913e-003, -5.071317e-003, 1.315887e-002, 4.310259e-003, 9.401372e-003, -1.413501e-003, -2.893043e-002, 1.004800e-002, 7.169869e-003, 2.020869e-002, -2.413889e-002, 2.625685e-002, -2.490430e-003, -4.427798e-003, -4.009444e-003, -7.006589e-003, -7.992707e-003, 2.429885e-002, 2.132934e-002, 6.112473e-003, -2.844327e-003, 2.426348e-003, 8.419970e-003, 1.609145e-002, 2.258229e-002, 2.611323e-002, 2.530789e-002, 1.838166e-002, 1.107215e-002, 9.599400e-003, 1.959358e-002, 3.531382e-002, 3.447504e-002, 1.938525e-002, 1.374383e-002, 2.091900e-002, 6.724438e-003, 3.779757e-003, 2.649014e-002, 3.496284e-002, 3.469619e-002, 3.186041e-002, 2.694306e-002, 2.553996e-002, 2.821816e-002, 1.815679e-002, 5.279301e-005, -2.417569e-003, 1.391073e-002, 6.050932e-003, 9.018140e-003, 5.790667e-003, -1.285675e-002, 9.751466e-003, -5.063313e-003, 2.446637e-002, -2.271167e-002, -1.720681e-002, 4.638220e-003, -1.119196e-002, -8.581190e-003, 2.562333e-003, -9.627500e-003, 1.684432e-002, 1.888756e-002, 1.240204e-002, 5.661887e-003, 6.709182e-003, 1.224752e-002, 1.228997e-002, 1.612756e-002, 1.350228e-002, 2.768484e-003, -1.450789e-002, -1.958918e-002, 4.659042e-003, 2.421873e-002, 3.026480e-002, 2.961430e-002, 2.067273e-002, 1.688038e-002, 2.467466e-002, 1.372354e-002, -1.718779e-002, -8.124851e-003, 1.619701e-002, 2.990164e-002, 3.421360e-002, 2.983804e-002, 3.004651e-002, 3.214269e-002, 2.453223e-002, 8.094552e-003, 2.347238e-003, 1.129332e-002, 7.018935e-003, -3.747972e-004, 8.038800e-003, -5.403757e-003, -2.399862e-003, -2.453609e-002, 2.007728e-002, -1.082349e-002, -1.616999e-002, 1.027305e-002, -9.537123e-003, -7.014641e-003, -8.415895e-004, -2.300871e-002, 2.059271e-003, 9.688073e-003, 1.578442e-002, 1.550606e-002, 1.725919e-002, 1.992113e-002, 8.770372e-003, -3.522238e-003, -1.501396e-002, -3.308811e-002, -4.487339e-002, -1.870278e-002, 5.591492e-003, 4.589860e-003, 5.286190e-003, 7.976572e-003, -7.314986e-004, 7.333360e-003, 1.902296e-002, 8.044180e-003, -2.384594e-002, -4.388820e-002, -2.123724e-002, -5.818765e-004, 1.413096e-002, 2.365584e-002, 3.078736e-002, 3.826843e-002, 3.627052e-002, 1.630817e-002, 5.202036e-003, 1.190953e-002, 6.358441e-003, -1.193384e-002, 5.225324e-003, -3.232057e-003, -1.172328e-002, -3.299818e-002, -2.931399e-002, -1.542658e-003, -1.683225e-002, 1.122689e-002, -3.371312e-003, -4.499029e-003, 1.489940e-003, -2.767486e-002, -1.550776e-002, -8.286734e-004, 1.523152e-002, 2.196468e-002, 2.474943e-002, 2.846557e-002, 1.542274e-002, -8.112590e-003, -2.716037e-002, -4.354434e-002, -3.976958e-002, -9.026355e-003, -5.642215e-003, -3.393657e-002, -2.786460e-002, -1.451866e-002, -1.895311e-002, -7.506446e-003, -2.346699e-003, -7.086148e-003, -2.569094e-002, -5.283701e-002, -4.471803e-002, -2.249226e-002, -3.175096e-003, 1.447767e-002, 3.365062e-002, 4.960073e-002, 4.374821e-002, 1.853978e-002, 8.487898e-003, 1.249708e-002, 5.521034e-003, -1.255500e-002, 6.020962e-004, -1.512378e-003, -1.461351e-002, -3.072922e-002, -3.089012e-002, 1.015534e-002, -2.457752e-002, 4.750709e-003, 3.790892e-003, -8.088465e-003, 1.433038e-002, -9.970784e-003, -1.730260e-002, -8.119951e-003, 7.512060e-003, 2.097483e-002, 2.948240e-002, 3.309612e-002, 1.680218e-002, -3.983606e-003, -2.336750e-002, -3.188745e-002, -1.770652e-002, 7.526206e-003, -6.697045e-003, -3.627979e-002, -3.265585e-002, -2.375289e-002, -2.016943e-002, -9.212116e-003, 1.457221e-003, 2.691802e-003, -1.368685e-002, -3.307658e-002, -3.831963e-002, -2.671153e-002, -7.984443e-003, 1.526834e-002, 3.725578e-002, 5.135721e-002, 4.016371e-002, 1.814434e-002, 7.392819e-003, 1.361324e-002, 4.394822e-003, -1.504488e-003, 6.106808e-003, 1.305562e-003, -6.493619e-003, -1.520887e-004, -1.757596e-002, 2.105992e-002, -2.528938e-002, -3.425725e-003, 8.151143e-003, -1.042240e-002, 1.960313e-002, 1.075445e-002, -8.344683e-003, -8.628788e-003, -4.364786e-005, 1.470811e-002, 2.166839e-002, 2.797696e-002, 1.503767e-002, -2.347831e-003, -1.513466e-002, -1.106371e-002, 5.352385e-003, 2.288899e-002, 2.219010e-003, -3.486929e-002, -3.256812e-002, -1.443999e-002, -2.934453e-003, -6.442285e-003, -1.906882e-003, 2.108509e-002, 1.880053e-002, 2.755897e-003, -1.072432e-002, -1.668373e-002, -6.673484e-003, 1.197260e-002, 3.336095e-002,


© ISO/IEC 2004 — All rights reserved

Copyright International Organization for Standardization
Provided by IHS under license with ISO
No reproduction or networking permitted without license from IHS
Not for Resale

4.298871e-002, 3.097614e-002, 7.238555e-003, -2.400040e-004, 1.385373e-002, 1.036981e-002, 1.207511e-002, 4.575380e-003, 1.460767e-003, -7.155441e-004, 1.274451e-002, -7.538104e-003, 2.648272e-002, -2.165434e-002, -1.115001e-002, 6.091268e-003, -1.194810e-002, 6.142846e-003, 1.258118e-002, -1.341048e-003, -6.973369e-003, -7.448336e-003, 8.951844e-003, 1.425653e-002, 2.347579e-002, 1.756830e-002, 7.367133e-003, 3.141438e-003, 1.527123e-002, 2.902226e-002, 2.913499e-002, 6.298150e-003, -1.712520e-002, -1.614305e-002, -1.164335e-002, -4.205530e-003, 4.842363e-003, 7.517801e-003, 2.114782e-002, 2.819311e-002, 2.797391e-002, 1.702087e-002, 7.037474e-003, 7.455438e-003, 1.705919e-002, 3.141499e-002, 3.322161e-002, 1.779679e-002, -3.681629e-003, -5.762491e-003, 1.495426e-002, 1.261377e-002, 1.317023e-002, -3.262482e-003, 2.346179e-003, 2.226432e-003, 2.220249e-002, -4.673096e-003, 3.374396e-002, -1.745629e-002, -1.493534e-002, 5.470604e-003, -4.849790e-003, -4.819648e-003, -2.030889e-003, 3.797933e-003, -3.800314e-003, -1.037970e-002, 1.251078e-003, 6.865294e-003, 1.718003e-002, 1.849168e-002, 1.370082e-002, 1.463939e-002, 2.742388e-002, 3.388421e-002, 2.017752e-002, -8.720243e-003, -2.289662e-002, -1.173901e-002, -6.047315e-004, 1.397928e-002, 1.593850e-002, 1.559487e-002, 2.068924e-002, 2.625003e-002, 3.202161e-002, 2.891072e-002, 1.904069e-002, 1.369883e-002, 1.809610e-002, 2.550546e-002, 1.797775e-002, 1.030682e-003, -1.469577e-002, -8.691718e-003, 1.070104e-002, 8.776134e-003, 1.022309e-002, 5.897390e-004, 5.310190e-003, 7.701593e-003, 2.741974e-002, -4.637937e-003, 4.142808e-002, -1.621612e-002, -1.272870e-002, 6.057595e-003, 1.971399e-003, -2.285371e-003, 1.406665e-003, 6.966906e-003, -9.080705e-004, -1.234654e-002, -8.752369e-003, -1.110763e-003, 1.061448e-002, 1.584707e-002, 1.509476e-002, 1.465254e-002, 1.787558e-002, 1.676059e-002, 5.922716e-003, -8.833327e-003, -1.473130e-002, -6.988217e-004, 8.948730e-003, 2.527036e-002, 2.659848e-002, 2.212623e-002, 2.460113e-002, 2.761178e-002, 2.910717e-002, 2.706566e-002, 1.745087e-002, 9.837613e-003, 1.289520e-002, 1.218187e-002, 8.615702e-004, -1.271059e-002, -2.162654e-002, -8.721822e-003, 3.393930e-003, -2.120757e-003, -3.871141e-003, 5.796553e-003, 1.504748e-002, 1.275385e-002, 2.356278e-002, -4.632379e-003, 5.268769e-002, 4.298465e-003, -1.142382e-002, 4.350379e-003, 3.869595e-003, 3.243104e-003, 5.457359e-003, 6.143692e-003, -1.389870e-003, -1.397852e-002, -1.260247e-002, -9.603075e-003, 1.171548e-003, 7.042742e-003, 4.974829e-003, -1.217012e-003, -3.329890e-003, -4.350941e-004, 3.700599e-003, 5.449033e-003, 8.803374e-003, 1.608512e-002, 2.118121e-002, 2.719372e-002, 2.744634e-002, 1.567413e-002, 1.192099e-002, 1.784298e-002, 2.113070e-002, 2.155413e-002, 1.514395e-002, 2.513321e-003, 2.091874e-003, -2.004223e-003, -1.228241e-002, -2.312530e-002, -2.213814e-002, -1.243792e-002, -2.810855e-003, -8.100103e-003, -1.190117e-002, 4.915393e-003, 1.243892e-002, 4.694484e-003, 1.875789e-002, -1.921117e-003, 1.857077e-002, 3.982954e-003, -5.216714e-003, 3.294531e-003, 2.293723e-003, 8.285293e-003, 8.475283e-003, 3.843954e-003, 1.755979e-003, -1.494383e-002, -1.210510e-002, -1.409214e-002, -1.006924e-002, -1.580496e-003, -9.687991e-003, -1.536311e-002, -1.016864e-002, 5.881604e-003, 2.498804e-002, 3.090579e-002, 2.944329e-002, 2.831658e-002, 2.977990e-002, 3.097413e-002, 3.291707e-002, 2.863558e-002, 2.173212e-002, 1.671342e-002, 1.689570e-002, 1.175683e-002, 4.124447e-003, -1.534827e-003, -7.239850e-003, -1.299345e-002, -1.867915e-002, -2.343140e-002, -1.853976e-002, -1.958811e-002, -1.054021e-002, -1.748912e-002, -1.312850e-002, -8.256775e-004, 4.974552e-004, -9.868533e-003, 5.097384e-003, -1.402966e-003, 1.984355e-002, 4.599036e-003, -7.083818e-003, -2.982197e-003, -5.662490e-004, 1.365233e-002, 1.425131e-002, 2.711237e-003, 4.122112e-004, -5.615136e-003, -6.373276e-003, -1.505929e-002, -2.003894e-002, -1.161258e-002, -1.831721e-002, -1.706612e-002, 4.111971e-003, 2.403796e-002, 2.831599e-002, 2.329988e-002, 2.478189e-002, 2.880888e-002, 2.931565e-002, 2.791590e-002, 2.712671e-002, 2.976551e-002, 2.615275e-002, 2.868548e-002, 1.968690e-002, 1.042725e-002, 1.519267e-003, -6.957788e-003, -1.697784e-002, -1.982160e-002, -1.991333e-002, -1.687428e-002, -1.625915e-002, -2.094780e-002, -1.084818e-002, -1.565488e-002, -1.230612e-002, -4.081077e-003, -1.112644e-002, -2.851299e-002, -4.465222e-003, -3.048352e-003, 1.705919e-002, 3.807816e-003, -8.326809e-003, -1.109807e-002, -8.667068e-003, 6.381645e-003, 9.450509e-003, -2.438401e-003, -2.319559e-003, -3.788998e-004, -2.341120e-003, -1.652786e-002, -2.640250e-002, -2.071137e-002, -2.519738e-002, -2.455931e-002, -9.424425e-003, 1.441517e-003, 7.478006e-003, 1.858077e-002, 3.181536e-002, 4.692947e-002, 5.301405e-002, 5.001411e-002, 3.759590e-002, 2.270090e-002, 9.962005e-003, -1.337203e-004, -1.357201e-002, -1.058834e-002, -4.009385e-003, -1.382801e-002, -2.436495e-002, -2.210273e-002, -1.678836e-002, -5.436965e-003, -1.118227e-002, -1.383768e-002, -9.816830e-003, -9.505168e-003, -4.205219e-003, 6.141038e-003, -1.229151e-002, -3.655804e-002, -5.035534e-003, 1.910577e-003, 1.102285e-002, 2.784515e-003, -6.171911e-003, -1.500539e-002, -1.603072e-002, 1.632104e-003, 5.984480e-003, -3.212823e-003, -5.192186e-003, -5.559393e-003, 4.188295e-003, -1.016988e-002, -2.210487e-002, -2.292868e-002, -2.660255e-002, -1.918650e-002, -7.173496e-003, -1.761238e-003, 1.895089e-004, 7.037339e-003, 1.459529e-002, 2.310142e-002, 2.952062e-002, 2.646861e-002, 2.447695e-002, 7.200526e-003, -1.292246e-002, -2.985844e-002, -4.435477e-002, -4.173786e-002, -3.062081e-002, -2.850276e-002, -3.284067e-002, -2.276867e-002, -7.275031e-003, 2.960138e-003, -6.556939e-003, -7.608615e-003, -1.005109e-002, -1.166438e-002, 5.003651e-003, 7.985475e-003, -1.189919e-002, -7.660733e-003, -1.481343e-003, 1.027078e-002, 4.367770e-003, -2.702682e-004, -1.794693e-003, -8.274499e-003, -

© ISO/IEC 2004 — All rights reserved


Copyright International Organization for Standardization
Provided by IHS under license with ISO
No reproduction or networking permitted without license from IHS
Not for Resale

1.082881e-002, -6.640921e-004, 2.128388e-004, -6.510286e-003, -8.410444e-003, -7.105853e-003, 1.517529e-002, 2.591322e-003, -1.235385e-002, -1.960107e-002, -1.629679e-002, 1.814544e-003, 1.900682e-002, 1.763833e-002, 5.461853e-003, 4.706891e-004, -4.973874e-004, -5.765119e-003, -3.487980e-003, -1.658799e-003, 3.882882e-003, 5.448597e-003, 5.838758e-003, 4.117036e-003, -1.982870e-003, -1.297714e-002, -2.414358e-002, -3.468413e-002, -2.975252e-002, -1.195951e-002, 9.565789e-003, 5.405302e-003, 9.199559e-005, 3.747385e-003, -8.720006e-003, -1.171091e-002, 1.196221e-002, 4.232207e-003, -1.147260e-002, 4.327267e-004, 5.617257e-003, 1.899244e-002, 4.728531e-003, -1.675201e-003, 5.523991e-003, 5.387963e-003, -2.861341e-003, -1.692007e-003, -5.478967e-003, -4.123044e-003, -5.858156e-003, -2.905746e-003, 1.018468e-002, 1.748250e-002, -1.990830e-003, -1.059025e-002, -1.130476e-002, 3.648309e-003, 2.451415e-002, 2.437999e-002, 7.231171e-003, -9.739006e-003, -2.527983e-002, -3.704066e-002, -3.521187e-002, -2.787902e-002, -1.346552e-002, -1.064783e-003, 1.141015e-002, 2.442056e-002, 3.099949e-002, 1.965238e-002, -9.230548e-003, -2.605698e-002, -2.023928e-002, 6.084829e-003, 1.761333e-002, 3.695453e-003, 5.097879e-003, 1.867305e-002, 1.344603e-003, -7.330785e-003, 1.748046e-002, 7.858029e-003, -8.718683e-003, 2.224648e-003, 9.609339e-003, 2.047461e-002, -3.816322e-005, -4.711423e-003, 1.327841e-002, 2.531410e-002, 1.367331e-002, 2.490867e-003, -1.028579e-002, -1.901829e-003, 3.608498e-003, 3.613552e-004, 3.160415e-003, 2.383870e-002, 8.842224e-003, -7.666639e-003, -1.225451e-002, -2.794171e-003, 1.058997e-002, 1.670087e-002, 8.834633e-003, -9.900900e-003, -3.222644e-002, -4.548414e-002, -4.647929e-002, -3.931221e-002, -2.410871e-002, -8.390909e-003, 1.092998e-002, 2.355680e-002, 3.073647e-002, 2.058078e-002, -4.450476e-003, -1.502804e-002, -2.514946e-003, 1.919019e-002, 2.074320e-002, 1.541232e-003, 1.161542e-002, 3.096307e-002, 4.035177e-003, -2.714332e-003, 1.277221e-002, 8.524237e-003, -3.060223e-003, 2.439984e-003, 1.031669e-002, 2.428905e-002, -2.980855e-003, -2.741172e-003, 2.810511e-002, 3.142081e-002, 2.646918e-002, 1.328978e-002, 2.715494e-003, 1.033787e-002, 1.279801e-002, 9.293069e-004, 6.191145e-003, 2.618537e-002, 1.866756e-002, 6.093696e-005, -9.314592e-003, -1.197419e-003, 8.457580e-003, 1.329569e-002, 1.448997e-002, -2.666586e-003, -2.085180e-002, -2.841007e-002, -3.199754e-002, -3.270543e-002, -1.782163e-002, 1.777656e-003, 1.659728e-002, 2.146236e-002, 2.281640e-002, 1.243638e-002, -1.848018e-003, -4.872994e-003, 1.119549e-002, 2.402572e-002, 1.080263e-002, -5.963982e-003, 1.992725e-002, 3.302963e-002, 7.391540e-004, 7.231133e-004, 6.902658e-003, 2.452118e-003, -3.431316e-003, 6.098118e-004, 6.383271e-003, 2.091043e-002, -3.517749e-003, 2.497544e-004, 1.995186e-002, 1.331458e-002, 1.605439e-002, 1.438145e-002, 1.109483e-002, 1.721894e-002, 1.573664e-002, -1.793993e-003, 8.855299e-004, 1.442423e-002, 1.864696e-002, 5.862057e-003, -3.537920e-003, 5.520367e-003, 2.040255e-002, 2.280783e-002, 2.092784e-002, 9.179345e-003, -5.972833e-003, -1.901070e-002, -2.736895e-002, -2.750747e-002, -1.431958e-002, 4.715457e-003, 1.858742e-002, 2.300028e-002, 1.813836e-002, 8.140920e-003, -1.358078e-003, 4.935776e-003, 1.925384e-002, 2.039030e-002, 2.936798e-003, -4.866696e-003, 2.116676e-002, 2.642863e-002, 1.210214e-002, 7.407032e-003, 8.468146e-003, 1.117607e-002, 6.322171e-003, 1.507031e-002, 1.114772e-002, 1.324248e-002, -1.345817e-002, -1.214843e-002, -3.378018e-003, -1.282142e-002, -1.492281e-002, -9.626235e-003, 6.113515e-003, 1.473649e-002, -1.080902e-002, -1.379063e-002, -1.427741e-002, -1.100498e-002, 1.400464e-003, -3.032870e-004, -5.014667e-003, 3.609467e-003, 1.784232e-002, 2.234531e-002, 1.939345e-002, 1.061899e-002, -3.142355e-003, -2.201998e-002, -3.375582e-002, -3.316835e-002, -2.492118e-002, -9.402346e-003, 5.739568e-003, 9.382912e-003, 4.645327e-003, -1.004666e-004, -8.473129e-003, -3.723626e-003, 7.621798e-003, 7.382531e-003, -8.507363e-003, -1.290487e-002, -7.346501e-003, -7.830600e-003, 7.647225e-003, 3.884289e-003, -6.014116e-003, 2.683270e-003, 7.280106e-003, 1.735062e-002, 7.529066e-003, 7.603351e-003, -2.579570e-002, -2.921473e-002, -2.035294e-002, -2.780852e-002, -3.566748e-002, -2.776031e-002, -1.190163e-002, -1.750989e-002, -3.823706e-002, -1.922331e-002, -1.766789e-002, -2.741017e-002, -2.646592e-002, -2.115850e-002, -1.568634e-002, -8.597228e-003, 2.056943e-003, 5.087637e-003, -2.063907e-004, -7.494194e-003, -1.771211e-002, -3.470848e-002, -4.700636e-002, -4.744548e-002, -3.644865e-002, -2.363369e-002, -1.145009e-002, -6.708715e-003, -9.499044e-003, -1.191768e-002, -1.865473e-002, -2.214018e-002, -1.662669e-002, -8.559047e-003, -1.719046e-002, -2.565432e-002, -3.288115e-002, -4.212318e-002, -1.986204e-002, -9.120709e-003, -2.403572e-002, -1.711567e-002, -1.270034e-002, 2.208244e-006, -3.621579e-003, -6.439405e-003, 4.439622e-003, 8.010607e-003, 2.271705e-002, 1.946060e-002, 1.036131e-002, 4.416511e-003, 1.220692e-002, 4.982837e-003, 8.661565e-003, 3.275931e-002, 3.214042e-002, 1.686136e-002, 9.520962e-003, 5.101104e-003, 1.380309e-002, 2.549892e-002, 3.191899e-002, 3.356425e-002, 2.656507e-002, 1.321073e-002, 2.731999e-003, -9.168652e-003, -2.185016e-002, -2.476245e-002, -2.083597e-002, -1.328586e-002, -4.179807e-003, -2.548977e-003, -2.913539e-003, -3.036023e-003, -1.254354e-002, -2.128471e-002, -2.333245e-002, -1.584265e-002, -9.849501e-003, -7.540454e-003, -2.284846e-002, -3.506001e-002, -8.843683e-003, -6.076181e-003, -2.010919e-002, -1.248621e-002, -1.387219e-004, -1.018075e-002, -1.150792e-002, -1.490442e-002, 8.682827e-004, 6.682346e-003, 2.115422e-002, 1.264121e-002, 1.114155e-004, -1.018659e-002, -5.548093e-003, -2.167455e-004, 8.546962e-003, 2.034816e-002, 1.559232e-002, 6.801755e-003, 2.945167e-003, -1.275218e-002, -1.383078e-002, -3.847868e-003, 1.287615e-002, 1.491000e-002, 6.558394e-003, -1.271866e-002, -


© ISO/IEC 2004 — All rights reserved

Copyright International Organization for Standardization
Provided by IHS under license with ISO
No reproduction or networking permitted without license from IHS
Not for Resale

2.475570e-002, -3.546253e-002, -4.690929e-002, -5.375561e-002, -5.268633e-002, -4.108690e-002, -3.034413e-002, -2.360438e-002, 3.344824e-002, 3.039881e-002, 2.134776e-002, 1.752346e-002, 1.351427e-002, 2.090292e-002, 3.757328e-002, 4.601920e-002, 3.050551e-002, 1.450518e-002, 2.723724e-002, 3.157908e-002, 2.359361e-002, 2.184691e-002, 3.619545e-002, 1.461141e-002, 1.199952e-002, 8.284451e-003, -5.128445e-003, -2.558444e-003, -4.778554e-003, 1.068788e-002, -4.601537e-003, -2.490570e-002, -1.025407e-002, 6.205777e-003, 2.160941e-003, 6.780333e-003, 5.585253e-003, 5.929806e-003, 4.892926e-003, -8.224809e-003, -2.215875e-002, -1.825380e-002, -1.948057e-003, 9.695560e-003, 1.521522e-002, 1.287815e-002, 9.695720e-003, 2.260585e-003, -4.347193e-003, -9.235597e-003, -6.461948e-003, -5.037690e-004, 4.221548e-003, 7.516865e-003, 7.949181e-003, 5.419265e-003, 4.632930e-003, 3.520693e-003, -5.790382e-003, 1.979555e-003, 2.491686e-002, 3.120973e-002, 1.944501e-002, 4.372363e-003, -1.963335e-003, -5.063747e-003, -5.100188e-003, 1.002322e-002, 1.822493e-002, -5.370858e-003, -9.221251e-003, -1.233217e-002, -1.074547e-002, -1.278530e-002, -1.341219e-002, 6.881834e-003, -5.984661e-003, -2.107928e-002, 1.735933e-003, -1.983186e-003, -2.235071e-002, -1.856986e-002, -5.553474e-003, -1.252021e-003, -7.920908e-003, -1.580080e-002, -2.469013e-002, -3.346661e-002, -2.518151e-002, -1.219449e-002, -3.244665e-003, 1.387137e-003, 2.393418e-004, -6.425790e-003, -1.435461e-002, -1.747155e-002, -1.993532e-002, -2.048574e-002, -1.691050e-002, -1.467170e-002, -1.413319e-002, -1.315106e-002, -5.312644e-003, -5.943997e-003, -2.110689e-002, -1.272433e-002, 1.569853e-003, 6.399219e-003, 3.312111e-003, 4.720937e-003, -1.540453e-002, -2.723929e-002, -3.331452e-002, -2.256810e-002, -3.720505e-003, -1.110632e-002, -8.984780e-003, -1.148556e-002, -1.014444e-002, -9.661599e-003, -6.761068e-003, 1.700652e-002, 3.239345e-003, -2.669899e-003, 1.084576e-002, -9.829070e-003, -1.559052e-002, 1.885674e-003, 2.761444e-003, -4.491100e-003, -1.021155e-002, -6.634933e-003, -1.064477e-002, -2.469109e-002, -2.545431e-002, -1.245465e-002, -2.462051e-003, 3.224889e-004, 3.662574e-004, -5.061298e-003, -1.162508e-002, -1.633553e-002, -1.800094e-002, -1.634380e-002, -1.472437e-002, -1.552025e-002, -1.444712e-002, -1.162754e-002, -2.415170e-004, -4.003427e-003, -9.448652e-003, -3.527506e-003, -3.972538e-003, -9.877465e-003, -3.711421e-003, 1.069708e-002, 1.864639e-003, -1.376753e-002, -2.453763e-002, -1.712012e-002, -1.634336e-003, -1.970983e-003, 2.789671e-003, -3.306468e-004, -4.510821e-003, 2.531116e-003, 6.021532e-003, -9.845218e-003, -2.347201e-002, -1.496675e-002, -1.671250e-002, -2.322576e-002, -1.817511e-002, -6.743235e-003, -1.122162e-002, -2.616634e-002, -2.099042e-002, -6.356376e-003, 3.198170e-003, -3.090121e-003, -6.836237e-003, -4.254420e-003, 2.170746e-003, 3.197665e-003, 2.350054e-003, -1.675667e-003, -9.605735e-003, -1.307759e-002, -1.201918e-002, -1.151784e-002, -8.270169e-003, -6.123142e-003, -9.180056e-004, 2.850159e-003, 1.002666e-002, 5.409798e-003, 5.950966e-003, 1.294842e-002, 4.995759e-003, -6.393668e-003, -1.026465e-002, 1.755353e-002, 2.110020e-002, 1.779908e-002, 9.491197e-003, 1.758239e-002, 2.579694e-002, 1.088015e-002, 1.633914e-002, 1.926558e-002, 8.994592e-003, 1.181844e-002, 1.195936e-002, -7.651580e-003, -9.110664e-003, 8.504236e-003, 2.069127e-002, 2.738840e-002, 2.148716e-002, 7.255128e-003, 4.040347e-003, -1.053333e-002, -7.835018e-003, 4.578813e-003, 1.307919e-002, 1.509402e-002, 1.748060e-002, 1.269082e-002, 1.090155e-002, 1.048173e-002, 9.825431e-003, 6.444539e-003, 6.824719e-004, -7.123838e-003, -7.338386e-003, -5.374127e-003, 5.770603e-004, 1.546592e-003, 6.079203e-003, 1.308792e-002, 1.544101e-002, 1.320377e-002, 1.871969e-002, 1.481703e-003, -8.692810e-003, -2.269445e-002, -3.171841e-002, -1.445926e-002, -7.901796e-003, 1.406248e-003, -2.463029e-003, -4.461913e-003, -1.085274e-002, -1.874108e-002, -1.494902e-002, -1.397325e-002},
{-8.555893e-003, 1.199629e-003, 1.043859e-002, -1.835640e-003, -6.515557e-003, -4.581785e-003, 1.934576e-003, -6.248168e-004, -1.367513e-003, 9.250143e-003, 5.452088e-003, -9.688599e-003, -1.338681e-002, -1.501173e-002, -1.256852e-002, -5.334262e-003, -4.001786e-003, -6.911994e-003, -7.038387e-003, -8.218028e-003, -1.414218e-002, -1.918218e-002, -2.006723e-002, -1.743098e-002, -1.483848e-002, -1.147917e-002, -4.781922e-003, -3.232705e-003, -1.545742e-003, 1.080360e-003, -4.394282e-003, -1.153088e-002, -1.296340e-002, -5.202622e-003, 7.003042e-003, 1.533680e-002, 7.798204e-003, 9.580491e-003, 2.433457e-002, 2.194891e-002, 7.949372e-003, 1.042038e-002, 1.259672e-002, -1.085056e-002, -1.896592e-002, -2.327308e-002, -3.331417e-002, -1.421200e-002, -1.251922e-002, -3.063183e-002, -2.546785e-002, -8.107055e-003, 4.612978e-003, 3.951086e-003, 2.541169e-003, 1.256640e-002, 1.336430e-002, 8.399727e-003, 6.645103e-003, 1.144592e-002, 2.162782e-002, 3.226720e-002, 2.975050e-002, 2.027400e-002, 8.297152e-003, -5.201121e-003, -2.029776e-002, -2.792248e-002, -2.939319e-002, -2.583053e-002, -2.066097e-002, -1.613365e-002, -1.120762e-002, -5.010421e-003, 3.680588e-003, 1.588912e-002, 2.115272e-002, 1.756455e-002, 5.197957e-003, -2.339529e-003, 4.326327e-003, 2.684418e-002, 3.293334e-002, 2.365812e-002, 2.082936e-002, 1.512909e-002, -2.533362e-003, -1.067688e-002, -6.099398e-003, -7.869225e-003, -1.428990e-002, -1.850143e-002, -2.314632e-002, -6.944709e-003, -1.226415e-002, -2.659733e-002, -1.238367e-002, 1.483311e-002, 1.153704e-002, 3.556519e-003, -1.569110e-003, 1.301423e-002, 4.668850e-003, -6.737340e-003, 2.242988e-004, 1.351745e-002, 2.523099e-002, 2.880627e-002, 1.576748e-002, 2.194156e-003, -1.338700e-002, -2.469978e-002, -3.431151e-002, -3.777244e-002, -3.535085e-002, -2.823225e-002, -2.041963e-002, -1.812538e-002, -1.142649e-002, -1.021861e-002, -8.487913e-003, -9.584523e-004, 1.212403e-002, 1.943788e-002, 1.617364e-002, 3.955965e-004, -1.214388e-002, -8.583991e-004,

© ISO/IEC 2004 — All rights reserved


Copyright International Organization for Standardization
Provided by IHS under license with ISO
No reproduction or networking permitted without license from IHS
Not for Resale

2.664190e-002, 3.138361e-002, 2.065025e-002, 1.094810e-002, 3.633004e-003, -1.013593e-002, -1.194229e-002, -4.440995e-003, -1.046854e-002, -1.668223e-002, -1.450254e-002, 1.238061e-003, -1.227334e-002, -2.064418e-002, 1.380050e-003, 2.049831e-002, 3.099862e-003, -1.322011e-002, 5.423001e-004, 7.735542e-003, -1.210928e-002, -1.302258e-002, 2.766147e-003, 1.375442e-002, 2.003099e-002, 1.512517e-002, -7.247229e-004, -1.284977e-002, -2.294088e-002, -3.109343e-002, -3.482790e-002, -3.457612e-002, -2.892824e-002, -1.542101e-002, -9.574384e-003, -2.596641e-003, 3.485313e-003, 5.065745e-003, 7.966227e-003, 1.120131e-002, 1.498717e-002, 2.205273e-002, 2.727264e-002, 2.070825e-002, 1.619109e-003, -1.037659e-002, 5.804108e-003, 2.288848e-002, 1.726594e-002, 2.021636e-003, -5.263583e-003, -9.692945e-003, -1.755804e-002, -7.121925e-003, -4.826966e-003, -1.017396e-002, 3.611336e-003, 1.416024e-002, -1.291482e-003, -8.545463e-003, 1.652485e-002, 3.663838e-002, -3.591952e-004, -1.205566e-002, 8.720405e-003, 6.718258e-004, -1.353148e-002, -1.230031e-003, 1.066576e-002, 1.607510e-002, 2.017325e-002, 1.301868e-002, 3.965916e-004, -9.596347e-003, -2.132723e-002, -2.991992e-002, -3.262399e-002, -3.166067e-002, -2.158737e-002, -4.390136e-003, 4.002191e-003, 7.555295e-003, 1.534834e-002, 2.018815e-002, 2.759635e-002, 3.382294e-002, 4.034382e-002, 3.656504e-002, 3.431949e-002, 3.257600e-002, 2.155014e-002, 5.153574e-003, -1.769681e-003, 3.826029e-003, 1.165164e-002, 2.389691e-003, -1.016881e-002, -1.166948e-002, -1.778159e-002, -1.354169e-002, -9.708795e-004, -5.188283e-003, 1.058279e-002, 1.951420e-002, -5.811474e-004, -8.394632e-003, 1.801126e-002, 2.097325e-002, -2.166341e-002, -1.094438e-002, 3.898164e-003, -4.522332e-003, -2.265608e-003, 9.474061e-003, 1.168855e-002, 1.241545e-002, 1.130207e-002, 1.147235e-003, -1.175260e-002, -2.884288e-002, -4.199107e-002, -4.632910e-002, -4.274966e-002, -3.484838e-002, -1.801662e-002, 3.248099e-003, 1.533025e-002, 1.434535e-002, 1.296348e-002, 1.489874e-002, 1.909922e-002, 3.027768e-002, 4.039444e-002, 4.287299e-002, 3.825883e-002, 3.117666e-002, 2.162112e-002, 9.325024e-003, -4.470223e-003, -1.025054e-002, -5.296150e-003, -1.235156e-002, -1.878019e-002, -2.203041e-002, -1.711133e-002, -9.755970e-003, 6.646358e-003, 5.577305e-003, 1.450642e-002, 2.093281e-002, -9.817637e-003, -1.009200e-002, 2.199613e-002, 3.454080e-004, -2.413972e-002, -2.569680e-004, -3.541653e-003, -6.440351e-003, 5.654293e-003, 1.728542e-002, 1.587095e-002, 1.322878e-002, 9.175403e-003, -3.377743e-003, -2.347505e-002, -4.789907e-002, -6.033857e-002, -6.023987e-002, -4.588750e-002, -2.185004e-002, 2.920345e-003, 2.270817e-002, 3.254143e-002, 3.036444e-002, 2.388021e-002, 1.994356e-002, 1.963451e-002, 2.574830e-002, 3.668779e-002, 4.145640e-002, 3.939888e-002, 3.496977e-002, 2.599037e-002, 8.085643e-003, -7.747025e-003, -1.526767e-002, -1.346922e-002, -2.089323e-002, -3.178262e-002, -2.065854e-002, -1.543585e-002, -8.831581e-003, 9.009523e-003, 1.493534e-002, 1.698862e-002, 1.458625e-002, -2.218279e-002, -5.478349e-003, 1.504919e-002, -1.521947e-002, -1.778154e-002, 1.697894e-003, -9.066873e-003, -9.512875e-003, 1.917196e-003, 1.384059e-002, 1.218742e-002, 1.438366e-002, 1.256397e-002, -5.632477e-003, -3.721216e-002, -6.413997e-002, -7.683422e-002, -7.341291e-002, -5.103301e-002, -1.483451e-002, 1.412300e-002, 3.478990e-002, 4.091870e-002, 3.286639e-002, 2.601134e-002, 2.316203e-002, 2.504164e-002, 3.137485e-002, 3.908320e-002, 3.664437e-002, 3.521878e-002, 2.974176e-002, 2.766603e-002, 1.387016e-002, -1.600803e-002, -1.933439e-002, -1.005686e-002, -9.210285e-003, -2.911163e-002, -2.411891e-002, -1.594848e-002, -1.432083e-002, 3.984102e-003, 2.054725e-002, 1.224687e-002, 2.996205e-003, -2.305872e-002, -2.774145e-003, -9.720321e-004, -2.020867e-002, -9.290081e-003, -5.907540e-003, -1.400904e-002, -1.219608e-002, -1.504657e-004, 6.827397e-003, 1.771073e-002, 2.541330e-002, 1.959178e-002, -5.811053e-003, -4.648479e-002, -8.167607e-002, -9.553345e-002, -8.359622e-002, -4.863311e-002, -3.703900e-003, 2.957361e-002, 4.328528e-002, 3.905341e-002, 2.846982e-002, 2.041346e-002, 1.491362e-002, 2.253197e-002, 2.893154e-002, 3.797027e-002, 3.787882e-002, 2.866823e-002, 1.947838e-002, 1.402865e-002, 8.913499e-003, -1.209428e-002, -2.596312e-002, -1.659756e-002, -2.796793e-003, -1.186166e-002, -2.390242e-002, -6.102259e-003, -8.375386e-003, 1.090587e-003, 2.139566e-002, 2.456957e-003, -5.988662e-003, -1.941711e-002, -2.979345e-003, -1.229220e-002, -1.576712e-002, -4.844032e-003, -1.802919e-002, -1.772172e-002, -1.688508e-002, -5.279826e-003, 5.588711e-003, 2.310138e-002, 3.253517e-002, 2.345190e-002, -9.710282e-003, -5.442179e-002, -8.597260e-002, -9.155700e-002, -6.843343e-002, -2.322527e-002, 1.715911e-002, 4.057394e-002, 4.453122e-002, 2.923096e-002, 1.438568e-002, 3.240312e-003, -3.467864e-003, 1.129568e-003, 9.817754e-003, 2.404568e-002, 3.618619e-002, 3.108987e-002, 1.128455e-002, 2.043608e-004, -8.371216e-003, -1.693613e-002, -3.386186e-002, -2.808544e-002, -2.525836e-003, -1.546073e-003, -8.607318e-003, 1.991094e-003, -1.332625e-004, -5.064377e-003, 2.031479e-002, -1.689857e-003, -1.470801e-002, -4.654648e-003, 1.082514e-003, -1.248837e-002, -6.758755e-003, -5.872617e-003, -1.712952e-002, -1.673619e-002, -1.442941e-002, -8.509797e-003, 1.030296e-002, 2.692000e-002, 2.651441e-002, 1.661150e-002, -1.343483e-002, -4.485449e-002, -5.892007e-002, -5.630443e-002, -2.960341e-002, 1.215600e-002, 3.724052e-002, 4.570677e-002, 4.050677e-002, 1.967998e-002, 1.060504e-003, -1.235215e-002, -2.168973e-002, -2.266008e-002, -1.212861e-002, 3.003080e-003, 1.931529e-002, 2.176228e-002, 6.633232e-003, -1.454977e-002, -2.634073e-002, -2.764127e-002, -3.904242e-002, -3.842377e-002, -1.089312e-002, 4.990390e-003, 1.109283e-002, 1.687379e-002, 9.022831e-003, -4.611394e-003, 1.653895e-002, -4.060778e-003, -5.991121e-003, 1.520736e-002, 8.100363e-003, -6.667059e-003, 4.190024e-003, -


© ISO/IEC 2004 — All rights reserved

Copyright International Organization for Standardization
Provided by IHS under license with ISO
No reproduction or networking permitted without license from IHS
Not for Resale

1.680266e-004, -1.108957e-002, -7.371558e-003, -1.087471e-002, -4.811767e-003, 1.020464e-002, 1.943173e-002, 2.293121e-002, 1.639215e-002, -5.959604e-004, -1.443160e-002, -1.461084e-002, -6.029202e-003, 1.671586e-002, 4.517121e-002, 5.332200e-002, 4.788466e-002, 3.390832e-002, 1.079021e-002, -1.491711e-002, -2.875078e-002, -3.778576e-002, -3.972202e-002, -3.112200e-002, -1.469786e-002, 4.065006e-003, 1.041314e-002, 2.542408e-003, -1.893574e-002, -3.526264e-002, -3.253033e-002, -3.525134e-002, -3.576162e-002, -1.452003e-002, 1.042998e-002, 2.288081e-002, 3.554394e-002, 2.117088e-002, 3.814999e-004, 1.097002e-002, -8.949187e-003, 1.554126e-003, 2.863259e-002, 1.553696e-003, -2.131718e-003, 1.346457e-002, 6.581801e-003, -2.179799e-003, 4.422553e-003, -6.339741e-003, -4.449060e-003, 8.337353e-003, 1.551879e-002, 2.236081e-002, 2.552611e-002, 2.149777e-002, 1.528439e-002, 1.790087e-002, 2.886993e-002, 4.180051e-002, 5.596984e-002, 5.510996e-002, 4.568219e-002, 2.856424e-002, 2.173677e-003, -2.494297e-002, -4.401100e-002, -5.386117e-002, -5.223479e-002, -3.776467e-002, -2.329751e-002, -5.148694e-003, 3.400955e-003, 1.221879e-003, -1.328568e-002, -3.095557e-002, -2.169665e-002, -1.797781e-002, -1.769824e-002, -7.341929e-003, 1.395821e-002, 2.243644e-002, 4.064348e-002, 3.570092e-002, 1.250023e-002, 8.350191e-003, -7.901974e-003, 1.655231e-002, 2.998607e-002, 1.215027e-003, 9.986390e-003, 1.908327e-002, 8.763411e-003, 5.300491e-003, 1.203975e-002, -3.267799e-003, -5.185354e-003, 1.445281e-003, 1.006599e-002, 2.316938e-002, 3.160184e-002, 3.423966e-002, 3.271848e-002, 3.290260e-002, 3.850432e-002, 4.344759e-002, 4.571234e-002, 4.275998e-002, 3.148934e-002, 1.534500e-002, -7.090973e-003, -3.391895e-002, -5.343045e-002, -6.425018e-002, -6.022347e-002, -4.389101e-002, -2.602667e-002, -8.881358e-003, 4.705363e-003, 5.433423e-003, -5.401787e-003, -1.858147e-002, -8.055271e-003, 3.550630e-003, 1.890262e-004, 2.329541e-003, 1.031363e-002, 1.545094e-002, 3.429731e-002, 3.970188e-002, 1.788616e-002, 1.669424e-002, -8.220453e-003, 2.244544e-002, 2.376559e-002, 1.972125e-003, 1.330037e-002, 2.004988e-002, 1.094694e-002, 3.357753e-003, 7.612102e-003, -4.751011e-004, -1.242652e-002, -8.038268e-003, 5.383610e-003, 2.279214e-002, 3.952174e-002, 4.716320e-002, 4.510537e-002, 3.555125e-002, 3.178685e-002, 2.472112e-002, 1.826946e-002, 1.325924e-002, 7.125341e-003, -1.066701e-002, -2.537694e-002, -4.503316e-002, -6.201986e-002, -7.141118e-002, -6.600910e-002, -4.869582e-002, -2.782343e-002, -1.176203e-002, 7.596214e-003, 1.534848e-002, 1.085406e-002, -5.848980e-003, 6.676509e-003, 1.924269e-002, 1.545568e-002, 1.534782e-002, 1.281958e-002, 5.181095e-003, 1.557626e-002, 4.065853e-002, 1.450252e-002, 1.541996e-002, -7.107731e-003, 1.655019e-002, 9.838423e-003, 2.857431e-003, 1.428379e-002, 1.625282e-002, 8.906962e-003, 2.804604e-003, 7.867691e-003, -2.545758e-003, -1.685579e-002, -1.719316e-002, -1.096900e-003, 2.239673e-002, 4.093452e-002, 5.269080e-002, 5.160757e-002, 3.471137e-002, 1.919227e-002, 2.832633e-004, -1.106605e-002, -1.665735e-002, -1.783046e-002, -2.854871e-002, -4.145590e-002, -5.640537e-002, -6.640495e-002, -7.059258e-002, -6.574575e-002, -4.752787e-002, -3.033416e-002, -1.263803e-002, 7.238504e-003, 1.841898e-002, 1.946112e-002, 2.073421e-003, 1.466393e-002, 2.849797e-002, 1.994581e-002, 1.882607e-002, 2.224194e-002, 2.072963e-003, -1.802620e-003, 2.523610e-002, 7.803601e-003, 8.483992e-003, -2.436757e-003, 8.847494e-003, -2.640542e-003, 5.450405e-003, 1.311470e-002, 6.958931e-003, 6.155985e-003, 5.956369e-003, 9.754751e-003, -3.894289e-003, -1.513439e-002, -1.998061e-002, -4.467871e-003, 2.264312e-002, 4.365348e-002, 5.750067e-002, 5.294203e-002, 3.802215e-002, 1.632348e-002, -6.332920e-003, -2.159152e-002, -2.786525e-002, -2.871243e-002, -3.525076e-002, -4.429668e-002, -5.769409e-002, -6.274048e-002, -5.978216e-002, -5.096726e-002, -3.527166e-002, -2.009967e-002, -3.793651e-003, 1.257351e-002, 2.407447e-002, 2.232989e-002, 8.341017e-003, 1.315728e-002, 2.683500e-002, 2.194364e-002, 1.392197e-002, 2.631853e-002, 4.130989e-003, -1.448101e-002, 9.691535e-003, 2.143011e-003, 5.375105e-003, 1.039658e-003, 3.075839e-003, -9.454059e-003, 5.960893e-003, 9.005932e-003, -3.515437e-003, 9.733795e-004, 5.127915e-003, 9.882514e-003, 8.954019e-004, -7.957575e-003, -2.301247e-002, -1.040720e-002, 1.810223e-002, 3.272521e-002, 4.494715e-002, 4.975468e-002, 4.088136e-002, 2.522631e-002, 8.816462e-003, -5.314036e-003, -1.241511e-002, -1.391832e-002, -1.903980e-002, -2.663751e-002, -3.290182e-002, -4.058291e-002, -3.546621e-002, -2.329734e-002, -1.437964e-002, -4.564831e-003, 6.782476e-003, 1.673075e-002, 2.425647e-002, 1.904562e-002, 6.299016e-003, 2.160095e-003, 1.655814e-002, 1.511195e-002, 1.648824e-003, 1.944812e-002, 6.697148e-003, -1.393576e-002, -5.773449e-003, -6.358445e-003, 1.125648e-002, 5.727684e-003, 3.788834e-004, -1.348538e-002, 3.438276e-003, 2.130969e-003, -1.658067e-002, -4.600452e-003, 1.152381e-003, 5.392129e-003, 1.346139e-003, -1.011061e-002, -2.612152e-002, -2.550524e-002, -1.103810e-002, -1.088910e-002, -6.826699e-003, -2.613558e-003, 4.449597e-003, 1.453073e-002, 2.176086e-002, 2.257392e-002, 2.600443e-002, 2.434286e-002, 2.445570e-002, 2.059478e-002, 1.535786e-002, 2.883175e-003, -4.032997e-003, -8.294298e-003, -8.579773e-003, -1.678723e-003, 4.060160e-003, 9.734876e-003, 1.524872e-002, 1.262471e-002, -4.848680e-003, -1.503309e-002, -9.957674e-004, 3.310657e-003, -1.526617e-002, 1.211478e-003, 5.643465e-003, -1.084391e-002, -1.504380e-002, -1.739591e-002, 1.193272e-002, 3.896013e-003, -6.294147e-003, -1.631058e-002, 5.054288e-003, 3.303478e-003, -2.092600e-002, -6.236805e-003, -6.464902e-003, 8.016100e-004, -3.334952e-003, -9.356129e-003, -2.002920e-002, -1.660777e-002, -3.125241e-003, -2.750815e-003, -4.124700e-004, -1.645352e-003, -2.850673e-003, -2.567647e-003, 1.119797e-002, 2.843763e-002, 4.673995e-002,

© ISO/IEC 2004 — All rights reserved


--`,,```,,,,````-`-`,,`,,`,`,,`---
Copyright International Organization for Standardization
Provided by IHS under license with ISO
No reproduction or networking permitted without license from IHS
Not for Resale

4.800078e-002, 4.424852e-002, 4.010569e-002, 3.336843e-002, 2.018939e-002, 9.735870e-003, 2.162770e-003, 1.709856e-003, 7.635443e-003, 3.470224e-003, -3.019933e-003, 1.294687e-003, 1.212389e-002, -1.732180e-003, -2.236116e-002, -1.927831e-002, -7.932712e-003, -2.357959e-002, -1.662301e-002, -1.306550e-003, -5.678697e-003, -1.821452e-002, -2.350339e-002, 9.639640e-003, -1.935366e-003, -1.085937e-002, -2.760837e-002, 6.222189e-003, 1.100183e-002, -1.979501e-002, -5.701744e-003, -7.464186e-003, -1.123903e-003, -3.266957e-003, -5.003948e-003, -1.378613e-002, -2.533161e-002, -2.950042e-002, -2.184069e-002, 4.080948e-003, 2.649460e-002, 3.898682e-002, 3.316285e-002, 2.568155e-002, 2.752646e-002, 4.388893e-002, 4.196778e-002, 2.816592e-002, 1.541649e-002, 1.235126e-002, 1.104677e-002, 1.958199e-002, 2.803866e-002, 2.925792e-002, 2.373214e-002, 8.094718e-004, -2.506259e-002, -2.996861e-002, -7.053480e-003, 7.034538e-003, -9.579385e-003, -1.972276e-002, -1.449538e-002, -2.010726e-002, -2.338216e-002, -5.710632e-003, -1.980440e-003, -1.749909e-002, -2.182019e-002, 5.993567e-003, -7.842029e-003, -5.101455e-003, -2.211361e-002, 4.492416e-003, 1.877210e-002, -5.585242e-003, -1.255399e-003, -2.356647e-003, 4.517833e-004, 4.278086e-003, -2.496604e-003, -2.800731e-002, -6.351402e-002, -8.002657e-002, -6.751443e-002, -3.576021e-002, -4.587293e-003, 1.954908e-002, 3.423784e-002, 3.340439e-002, 2.743435e-002, 3.084050e-002, 2.465409e-002, 8.944484e-003, -1.027393e-002, -4.272537e-003, 2.075339e-002, 4.168655e-002, 4.657843e-002, 3.658889e-002, 1.550213e-002, -1.406317e-002, -4.340664e-002, -5.905133e-002, -3.663451e-002, 3.171090e-003, 5.815597e-003, -7.586580e-003, -6.354844e-003, -9.815498e-003, -1.714510e-002, -6.240604e-003, -3.095920e-003, -1.434259e-002, -2.157128e-002, 4.657422e-004, -6.114673e-003, 2.692224e-003, -3.135630e-003, 7.901691e-003, 2.000074e-002, 7.378428e-003, 3.587249e-003, 5.874842e-003, 9.720253e-003, 1.614072e-002, 7.170621e-004, -4.092375e-002, -7.909382e-002, -6.793324e-002, -4.262368e-002, -1.917814e-002, -8.176674e-003, -8.929918e-003, -3.818145e-003, 1.093658e-002, 1.926926e-002, 2.375783e-002, 1.503946e-002, -1.432729e-003, -1.870810e-002, -3.835661e-003, 2.813223e-002, 3.211090e-002, 3.553949e-002, 3.814447e-002, 2.728866e-002, -4.635522e-003, -2.847544e-002, -5.695617e-002, -6.163953e-002, -2.320284e-002, 1.857799e-002, 1.238255e-002, 1.119491e-002, 1.232607e-002, 1.008590e-004, -5.858698e-003, -4.992321e-003, -2.976095e-003, -1.072656e-002, -7.657564e-003, -4.380072e-003, 2.993887e-003, 6.974334e-003, 5.343506e-003, 4.968632e-003, 1.119320e-002, 5.540153e-003, 1.132411e-002, 2.136163e-002, 2.365492e-002, 1.123299e-002, -2.709050e-002, -4.936458e-002, -3.258889e-002, -1.933080e-002, -1.420842e-002, -3.088646e-002, -5.920789e-002, -4.603734e-002, -1.794523e-002, 3.054783e-003, 1.309118e-002, 1.542142e-002, 1.123575e-002, -7.778598e-003, -5.241166e-003, 2.306174e-002, 1.495314e-002, -2.426428e-005, 9.702353e-003, 4.132636e-003, -1.621784e-002, -1.193241e-002, -8.952048e-003, -4.830437e-002, -3.413494e-002, 1.940425e-002, 3.681057e-002, 2.703338e-002, 2.356776e-002, 1.398648e-002, -3.477483e-003, -1.521454e-002, -4.301563e-003, -4.857156e-003, -7.126138e-003, -7.552180e-003, 1.388012e-003, 1.038651e-002, -1.979573e-003, 6.211269e-004, 1.033833e-002, 1.401166e-002, 1.595963e-002, 2.694931e-002, 2.604792e-002, 2.390219e-002, 4.855430e-003, -8.463316e-003, -3.313230e-003, 4.776397e-003, 3.369260e-003, -2.598907e-002, -4.790201e-002, -3.825375e-002, -1.299783e-002, 6.899125e-004, 1.601053e-002, 3.147733e-002, 2.176718e-002, 4.419754e-003, -4.322617e-003, 2.135642e-002, 1.154256e-002, -2.085959e-002, -7.761071e-003, -7.723484e-003, -3.474368e-002, -2.890416e-002, 1.736792e-002, -4.451868e-003, -1.891810e-002, 1.212123e-002, 4.225357e-002, 3.447209e-002, 1.748551e-002, 1.564151e-002, -4.183035e-003, -1.331096e-002, -6.324589e-003, -2.676969e-003, -1.165444e-002, -1.225982e-002, 2.370434e-003, 5.864085e-003, -6.673644e-003, -1.079365e-002, 2.824602e-003, 2.048141e-002, 1.073548e-002, 1.506779e-002, 8.320061e-003, 9.698561e-003, 1.288026e-002, 5.243331e-003, -4.899212e-003, -9.144450e-003, -4.052211e-003, -5.738315e-003, -1.783524e-003, 1.245514e-002, 1.928227e-002, 6.519166e-003, 1.438738e-002, 2.161267e-002, 1.642859e-002, 1.304869e-002, 1.950716e-003, 3.579144e-002, 3.413728e-002, 1.635573e-002, -1.594774e-003, -1.266714e-002, -2.835908e-002, -2.202339e-002, 1.114824e-002, 1.958092e-002, 5.838380e-003, 1.317126e-002, 2.698131e-002, 8.914044e-003, 6.265467e-003, 2.032161e-002, 1.084823e-002, 7.203955e-003, 9.443606e-004, 4.715795e-003, -1.227609e-002, -1.511171e-002, 9.987826e-004, -1.463658e-003, -8.902030e-003, -1.424569e-002, -9.636046e-003, 1.601631e-002, 3.672391e-003, -7.770198e-003, -1.910135e-002, -1.298423e-002, -1.536283e-003, 2.280072e-003, 2.561910e-003, 5.929980e-003, 1.483237e-002, 2.512254e-002, 3.675187e-002, 4.419252e-002, 3.261695e-002, -1.032085e-002, 2.955027e-004, 4.174125e-003, 8.487080e-003, 1.516863e-002, 8.812388e-003, 2.687044e-002, 5.173726e-002, 3.674665e-002, 1.632871e-002, 1.786445e-003, -1.397444e-002, -1.693575e-002, -7.230725e-003, 2.441692e-003, -7.694903e-003, -3.233443e-003, 1.412947e-002, -5.096973e-003, -5.596833e-003, 1.302634e-002, 6.747076e-003, 1.473112e-002, 9.522716e-003, 9.598326e-003, -1.264042e-002, -1.703979e-002, -2.073369e-003, -3.378007e-003, -4.893761e-003, -1.340704e-003, -1.077449e-002, 7.895247e-003, -6.812092e-003, -2.612343e-002, -4.117292e-002, -3.593508e-002, -8.180694e-003, 1.009893e-004, 1.200951e-002, 2.563742e-002, 3.624024e-002, 4.572579e-002, 5.178373e-002, 4.744314e-002, 9.866561e-003, -2.084556e-002, -1.407030e-002, -6.145365e-003, 3.704290e-003, 1.237199e-002, 1.902850e-002, 9.327030e-003, 3.933469e-002, 4.699598e-002, 3.512672e-002, 1.770472e-002, 6.518075e-004, -8.350915e-003, -7.182421e-003, -1.242717e-002, -2.579226e-002, -2.771825e-002, -7.681920e-003, -


© ISO/IEC 2004 — All rights reserved

Copyright International Organization for Standardization
Provided by IHS under license with ISO
No reproduction or networking permitted without license from IHS
Not for Resale

2.437006e-002, -1.670053e-002, 2.702590e-003, -4.374392e-003, 1.342091e-002, 1.428032e-002, 1.552824e-002, -1.467599e-002, -1.430681e-002, -7.222543e-003, -4.977914e-003, 4.297796e-003, 1.094135e-002, -7.707823e-003, 2.261647e-003, -1.120568e-002, -3.528533e-002, -4.988084e-002, -4.505976e-002, -1.870672e-002, -4.320294e-003, 1.059954e-002, 2.484221e-002, 3.579313e-002, 4.247792e-002, 3.639962e-002, 1.552082e-002, -2.051103e-002, -2.804643e-002, -2.250012e-002, -4.642600e-003, 1.096681e-003, 6.390826e-003, 1.898666e-002, 9.616261e-004, 4.870754e-003, 2.049936e-002, 2.725223e-002, 1.748370e-002, 4.446530e-003, -6.159610e-003, -9.430163e-003, -1.934229e-002, -3.769827e-002, -3.800713e-002, -2.755572e-002, -3.330692e-002, -1.832010e-002, -5.120696e-003, -1.891754e-002, 1.741781e-002, 1.459934e-002, 1.693971e-002, -3.157272e-002, -1.429789e-002, -1.108641e-002, -5.050128e-003, 1.154501e-002, 1.383061e-002, -1.396244e-002, -2.922536e-004, -1.033282e-002, -3.063228e-002, -4.361860e-002, -3.746179e-002, -2.127407e-002, -1.018338e-002, 2.786849e-003, 1.409279e-002, 1.852432e-002, 1.205859e-002, -7.721257e-005, -2.329818e-002, -3.676190e-002, -3.817235e-002, -1.787506e-002, 1.065279e-003, 1.755497e-003, 4.276852e-003, 1.869789e-002, 7.784646e-003, -8.867458e-003, -1.550174e-002, -1.131379e-002, -5.954339e-003, -1.196410e-002, -1.712914e-002, -1.649628e-002, -2.055445e-002, -3.467233e-002, -3.825770e-002, -3.307429e-002, -3.715049e-002, -2.159351e-002, -1.697768e-002, -2.283349e-002, 1.184970e-002, 7.093567e-004, 6.946036e-003, -3.563485e-002, -1.378167e-002, -4.700427e-003, -5.773255e-004, 1.386296e-002, 1.232542e-002, -2.441382e-002, -8.085073e-003, -9.239331e-003, -2.220814e-002, -2.794838e-002, -1.955302e-002, -9.764605e-003, -6.688414e-003, -8.649393e-003, -9.592758e-003, -1.004767e-002, -1.205358e-002, -1.551281e-002, -3.216819e-002, -3.743291e-002, -3.713776e-002, -9.670489e-003, 6.516048e-003, 8.521226e-003, 1.778265e-002, 2.836483e-002, 1.482412e-002, -1.279704e-002, -2.355955e-002, -2.663181e-002, -2.074204e-002, -1.848769e-002, -1.271467e-002, -4.041699e-003, -5.665611e-003, -1.780091e-002, -2.706555e-002, -3.338465e-002, -3.561440e-002, -2.539585e-002, -2.196447e-002, -2.178792e-002, 4.928359e-003, -5.026512e-003, -1.593423e-003, -2.740001e-002, -1.102467e-002, 5.038760e-003, 1.017423e-002, 9.464815e-003, 8.509615e-003, -2.381535e-002, -1.969102e-002, -7.977537e-003, -1.496971e-002, -1.819440e-002, -3.287852e-003, 6.914588e-003, 8.249362e-003, 5.314973e-003, 4.602948e-003, 2.547377e-003, 4.283653e-003, -6.840052e-003, -2.484670e-002, -3.459886e-002, -3.004815e-002, -5.340893e-003, 6.170406e-003, 9.684198e-003, 1.065146e-002, 6.718115e-003, 1.517854e-002, -5.913606e-003, -2.468111e-002, -2.576254e-002, -1.353761e-002, -5.128238e-003, 4.315607e-003, 1.424847e-002, 1.002126e-002, -2.813600e-003, -1.720207e-002, -2.642270e-002, -2.703051e-002, -2.396759e-002, -1.434785e-002, -1.075387e-002, 1.910473e-003, -1.348196e-002, -1.624633e-003, -3.205640e-002, -1.108732e-002, 4.518713e-003, 1.196118e-002, 5.058881e-003, 7.956765e-003, -1.608132e-002, -1.883626e-002, -7.027051e-003, -1.011727e-002, -8.445607e-003, 6.343418e-003, 1.637962e-002, 1.838117e-002, 1.507441e-002, 1.310024e-002, 1.150217e-002, 4.230422e-003, -2.611597e-003, -1.737644e-002, -2.676381e-002, -1.790756e-002, 4.415412e-003, 1.345669e-002, 1.126810e-002, -1.022808e-002, -4.679172e-002, -3.327585e-002, -6.950822e-003, -2.694054e-002, -3.044306e-002, -1.183719e-002, 5.284597e-003, 1.895631e-002, 2.889949e-002, 2.110040e-002, 6.210431e-003, -1.192583e-002, -1.855794e-002, -1.426603e-002, -1.073609e-002, -5.007994e-003, -1.847700e-003, -1.048167e-004, -1.740662e-002, -2.731981e-003, -2.414566e-002, -1.203563e-002, 4.735983e-003, 1.047509e-002, -4.060708e-003, 4.794685e-003, -1.708683e-003, -1.502472e-002, -9.734739e-003, -1.238420e-002, -6.005064e-003, 9.317530e-003, 1.818349e-002, 1.516605e-002, 9.107425e-003, 4.269879e-003, -3.652868e-003, -5.358482e-003, 3.970928e-003, -4.831243e-003, -8.743320e-004, 1.599792e-002, 2.789804e-002, 2.463740e-002, 2.083201e-002, 3.912208e-003, -3.820393e-002, -5.947980e-002, -2.367946e-002, -2.022110e-002, -3.062961e-002, -2.370805e-002, -1.072618e-003, 1.986200e-002, 2.991529e-002, 1.902089e-002, 2.187745e-003, -8.727968e-003, -1.161606e-002, -8.482529e-003, 1.677270e-003, 3.205080e-003, 1.198532e-003, -1.162790e-002, -1.593439e-002, 2.473763e-003, -1.913463e-002, -5.774185e-003, 9.979582e-003, 9.013511e-003, -3.661864e-003, -5.497803e-003, -2.826468e-003, -6.342504e-003, -4.554375e-003, -1.315221e-002, -4.700497e-003, 7.321114e-003, 1.556734e-002, 9.427933e-003, -3.116421e-003, -1.312893e-002, -1.650956e-002, -5.978430e-003, 1.896700e-003, -1.451111e-004, 5.577788e-003, 1.540715e-002, 1.428778e-002, 1.208944e-002, 5.328394e-003, 5.068023e-003, -1.072387e-002, -4.168707e-002, -3.171572e-002, -1.023147e-002, -1.462806e-002, -2.043427e-002, -7.289276e-003, 1.377798e-002, 2.239916e-002, 9.469176e-003, -8.292174e-004, -5.771448e-003, -1.088660e-003, 3.373576e-003, 1.245818e-002, 1.128186e-002, -1.979816e-003, -2.520238e-002, -1.089246e-002, 9.109162e-003, -1.305944e-002, -5.155562e-003, 1.767127e-002, 9.657896e-003, -1.540167e-002, -1.917353e-002, -2.489532e-003, 1.435925e-002, 1.339797e-002, -6.967939e-003, -5.325027e-004, 8.121590e-003, 9.565285e-003, 4.035515e-003, -1.145549e-002, -1.900518e-002, -1.672096e-002, -4.533910e-003, 1.114702e-003, -3.887242e-003, -9.560208e-003, -1.119426e-002, -3.353040e-003, -8.138613e-003, -1.259217e-002, -1.037488e-002, -7.439772e-003, -2.153629e-002, -2.214376e-002, 3.459393e-003, 1.318787e-002, 4.790008e-003, 1.085594e-003, 9.328822e-003, 1.177452e-002, 3.386751e-004, -2.463889e-003, -2.111569e-003, 4.806586e-003, 7.550189e-003, 1.368186e-002, 1.223213e-002, -1.750289e-002, -2.676886e-002, -7.229389e-003, 1.085368e-002, -1.254502e-002, -5.168460e-003, 1.868401e-002, 1.498638e-002, -1.340589e-002, -2.620598e-002, -1.287379e-002, 1.692187e-002, 2.395504e-002,

© ISO/IEC 2004 – All rights reserved


Copyright International Organization for Standardization
Provided by IHS under license with ISO
No reproduction or networking permitted without license from IHS
Not for Resale

7.458569e-004, 2.082817e-003, 1.144212e-002, 7.714932e-003, 2.686086e-003, -1.256880e-002, -1.747638e-002, -9.843275e-003, 2.533402e-003, 6.205906e-003, -5.334110e-003, -1.474592e-002, -2.159700e-002, -1.631915e-002, -1.409811e-002, -1.061174e-002, -1.354458e-002, -1.346436e-002, -1.761635e-002, -1.230680e-002, 1.285609e-002, 3.059152e-002, 3.655785e-002, 2.483391e-002, 1.642820e-002, 4.280482e-003, -4.916009e-003, 1.236132e-003, 5.146620e-003, 8.608850e-003, 3.931777e-004, 1.622997e-002, 6.353214e-003, -1.918491e-002, -9.682122e-003, 2.637038e-003, 6.669888e-003, -1.346436e-002, -6.309785e-003, 1.355684e-002, 2.479354e-002, 4.897112e-003, -1.527387e-002, -1.929223e-002, 1.417839e-002, 3.068098e-002, 8.188193e-003, 4.635017e-003, 1.557236e-002, 1.157808e-002, 5.412263e-003, -8.789843e-003, -6.174135e-003, 7.865567e-003, 2.393614e-002, 2.382064e-002, 7.254454e-003, -9.473639e-003, -2.069004e-002, -1.767385e-002, -1.505241e-002, -1.413949e-002, -1.562362e-002, -1.921151e-002, -1.598514e-002, 4.727878e-003, 2.867963e-002, 4.584354e-002, 5.282082e-002, 4.683781e-002, 2.860696e-002, 5.979343e-003, -1.886493e-003, 1.078312e-002, 9.354370e-003, 8.940543e-003, -2.301496e-003, 1.760013e-002, 1.660208e-002, 1.090212e-002, 1.168607e-002, 1.255548e-002, 5.065399e-003, -9.100963e-003, -5.175444e-003, 1.444171e-002, 2.325800e-002, 1.784341e-002, -2.962271e-003, -1.213603e-002, 8.791485e-003, 2.616235e-002, 1.202956e-002, 4.941152e-003, 1.553477e-002, 1.362811e-002, 8.292114e-003, 3.192119e-003, 1.507117e-002, 2.734061e-002, 3.244038e-002, 2.577696e-002, 3.466256e-003, -1.503249e-002, -2.619432e-002, -1.930276e-002, -9.305910e-003, -1.019172e-002, -9.700205e-003, -1.307822e-002, -1.021331e-002, 9.948668e-003, 2.832458e-002, 4.655665e-002, 5.531649e-002, 5.589222e-002, 3.427858e-002, 1.426246e-002, 1.107896e-002, 1.927942e-002, 1.403292e-002, -3.535960e-003, -4.886705e-003, 2.336988e-002, 2.731026e-002, 2.545789e-002, 1.915568e-002, 1.639373e-002, 7.043894e-003, -4.926570e-003, 3.968335e-004, 1.462122e-002, 2.099497e-002, 2.201132e-002, 9.671932e-003, 1.181187e-003, 9.322433e-003, 1.268726e-002, 7.319530e-003, 4.539812e-004, 1.378556e-002, 1.498165e-002, 1.248560e-002, 1.134513e-002, 2.706163e-002, 4.443412e-002, 3.623438e-002, 9.320611e-003, -2.242693e-002, -3.689224e-002, -3.512528e-002, -2.240115e-002, -1.607569e-002, -1.650473e-002, -1.323417e-002, -1.399430e-002, -1.091649e-002, 3.986900e-003, 1.773040e-002, 3.231432e-002, 4.542726e-002, 4.570216e-002, 2.532366e-002, 1.275142e-002, 2.124315e-002, 2.525970e-002, 1.405051e-002, -1.135602e-002, 2.612501e-003, 2.670805e-002, 2.010993e-002, 2.693334e-002, 2.257001e-002, 1.710283e-002, -3.182933e-003, 3.294510e-003, 9.096087e-004, 1.261959e-002, 1.422947e-002, 6.317313e-003, 4.422234e-003, 1.109043e-002, 1.690018e-002, 1.133853e-002, 1.189849e-002, 4.419130e-004, 1.291043e-002, 1.770385e-002, 1.403628e-002, 1.144664e-002, 2.870422e-002, 4.783440e-002, 3.349401e-002, -2.104128e-003, -1.821737e-002, -1.850414e-002, -1.242056e-002, -5.843950e-003, -9.394963e-004, -1.010885e-003, 9.003818e-004, -1.657415e-003, 1.453727e-003, 1.137119e-002, 2.483013e-002, 2.441323e-002, 1.836204e-002, 1.817142e-002, 1.154505e-002, 1.600830e-002, 2.932266e-002, 2.874243e-002, 7.071270e-003, -1.376511e-002, 1.013917e-002, 2.166266e-002, 1.144032e-002, 1.839794e-002, 1.591270e-002, 1.110244e-002, 2.776936e-003, 4.690507e-003, 3.214020e-003, 8.941572e-003, 5.422012e-003, -5.812503e-003, -7.523929e-003, 4.943566e-003, 2.060711e-002, 9.913352e-003, 1.392697e-002, 6.818819e-003, 1.394274e-002, 1.314064e-002, 1.170687e-002, 8.818461e-003, 2.823054e-002, 4.165766e-002, 1.954029e-002, -1.563163e-002, -2.955064e-002, -1.992858e-002, -5.328641e-003, 2.899144e-003, 7.710371e-003, 1.098525e-002, 1.676283e-002, 1.802251e-002, 1.581677e-002, 1.786086e-002, 1.261563e-002, 2.759127e-003, -1.780123e-003, 6.998656e-004, 4.618681e-003, 1.892525e-002, 2.892033e-002, 2.297709e-002, 5.430354e-003, -8.169961e-003, 1.524495e-002, 4.245428e-003, 4.260004e-003, 1.203743e-002, 2.194774e-003, -7.090933e-004, -4.205411e-003, 4.154374e-003, 1.676527e-004, 5.229646e-003, -4.825914e-003, -1.186537e-002, -1.279849e-002, -5.999763e-003, 1.610810e-002, 9.031175e-003, 2.631837e-003, 9.113826e-003, 1.270485e-002, 9.150617e-003, 5.720083e-003, 2.715706e-003, 1.856003e-002, 2.401052e-002, -3.633137e-003, -3.687892e-002, -4.876050e-002, -3.660394e-002, -1.724951e-002, -3.887254e-003, 2.062597e-003, 5.149226e-003, 8.247741e-003, 1.218710e-002, 1.376948e-002, 1.900811e-002, 1.679277e-002, 1.258403e-002, 4.396731e-003, 1.476720e-003, 1.238137e-002, 2.435297e-002, 2.405718e-002, 1.209134e-002, 6.338579e-003, -2.345443e-003, 3.464502e-003, -1.534020e-002, -4.943807e-003, 4.232046e-003, -1.686332e-003, -7.505287e-003, -1.557402e-002, -8.543355e-004, -3.266360e-003, -2.456808e-003, -1.057374e-002, -8.061542e-003, -1.161158e-002, -1.377515e-002, -1.187592e-003, -4.493735e-003, -1.955546e-002, 4.033692e-004, 9.972959e-003, 8.537336e-003, 5.152827e-003, -4.781747e-004, 6.932439e-003, 5.396042e-003, -1.358525e-002, -3.326348e-002, -3.743209e-002, -2.482537e-002, -5.828550e-003, 6.538267e-003, 1.449877e-002, 1.504537e-002, 1.053922e-002, 2.632518e-003, -9.328408e-003, -7.799020e-003, 3.308845e-003, 1.040883e-002, 8.829569e-003, 1.167805e-002, 1.861729e-002, 1.902160e-002, 8.681142e-003, 1.066612e-003, 1.614095e-003, 3.427543e-003, -1.037832e-002, -2.648231e-002, -9.471647e-003, -5.232248e-003, -8.744557e-003, -4.302386e-003, -9.142046e-003, -2.576182e-003, -9.406505e-003, -7.699155e-003, -1.018496e-002, -2.795521e-003, -2.032316e-003, -9.790526e-003, -1.451647e-002, -1.736320e-002, -3.091626e-002, -1.547467e-002, 3.795223e-003, 3.982704e-003, 2.181707e-003, -4.487705e-003, -5.963825e-003, -6.161195e-003, -7.599950e-003, -2.047185e-002, -3.120211e-002, -2.506631e-002, -9.725825e-003, 4.517268e-003, 9.385563e-003, 6.080712e-003, -


© ISO/IEC 2004 — All rights reserved

Copyright International Organization for Standardization
Provided by IHS under license with ISO
No reproduction or networking permitted without license from IHS
Not for Resale

2.031817e-003, -1.395848e-002, -2.980545e-002, -3.200259e-002, -1.656461e-002, -3.267428e-003, 7.956214e-003, 1.390500e-002, 1.642276e-002, 5.239148e-003, -1.026668e-002, -7.635527e-003, -1.178402e-003, 5.981623e-003, -9.792542e-003, -1.836749e-002, -5.869847e-003, -8.767778e-003, -1.430186e-002, -4.924472e-004, -3.208543e-003, -2.245334e-003, -1.854453e-002, -1.150418e-002, -1.529559e-002, -5.708355e-003, 6.373077e-003, 1.025087e-003, -7.560689e-003, -1.186747e-002, -2.376708e-002, -2.472639e-002, -3.960393e-003, 6.387167e-003, -8.574041e-004, -5.295018e-003, -7.010738e-003, -5.104951e-003, -3.086417e-003, -4.937538e-003, -1.238645e-002, -1.759859e-002, -1.507585e-002, -8.292883e-003, -5.713065e-003, -1.014830e-002, -1.776345e-002, -2.840082e-002, -3.550773e-002, -3.182984e-002, -1.976641e-002, -9.864330e-003, 2.123456e-003, 8.291893e-003, 2.422677e-003, -8.384816e-003, -1.190232e-002, -1.356081e-002, -5.190241e-004, 8.301490e-003, -1.406610e-003, 9.363775e-004, 6.186197e-003, -3.419176e-004, -7.992404e-003, 6.325821e-003, -1.612492e-003, -4.052381e-003, -1.836653e-002, -1.299718e-002, -1.583636e-002, -3.428956e-003, 1.216111e-002, 1.569649e-002, 1.617625e-003, -9.321053e-003, -1.680255e-002, -2.137087e-002, -8.176526e-003, 5.899754e-003, 2.207053e-003, -6.708350e-003, -5.541694e-003, -7.005652e-003, -4.572609e-003, -1.713608e-003, -2.387037e-003, -3.422243e-003, -9.602546e-003, -8.797422e-003, -1.415288e-002, -2.002381e-002, -2.630342e-002, -2.816122e-002, -2.882941e-002, -2.088474e-002, -1.556985e-002, -1.192625e-002, -6.841278e-003, -2.802130e-003, -7.877511e-003, -6.614720e-003, -2.952488e-004, -9.505367e-003, -8.021545e-003, -6.722923e-003, -1.655629e-003, 2.489677e-002, 2.080599e-002, 8.766118e-003, -4.511001e-006, 1.536477e-002, -2.058623e-003, -6.427443e-003, -1.626541e-002, -1.267424e-002, -1.256423e-002, 1.221224e-003, 1.519548e-002, 1.590363e-002, 7.343303e-003, -4.287788e-003, -1.077994e-002, -2.091991e-003, -2.211851e-003, 2.545844e-003, 2.249454e-003, -2.590232e-003, 6.919555e-004, -1.518920e-003, -8.212933e-003, -7.512135e-003, -1.113080e-003, 3.603483e-003, 4.548908e-003, 5.396737e-003, 1.759412e-003, -3.450808e-003, -7.972804e-003, -9.705036e-003, -1.169250e-002, -1.138482e-002, -1.373997e-002, -1.056352e-002, -8.475487e-003, -5.571858e-003, -4.608200e-003, 5.663446e-003, 1.514500e-002, 2.293688e-003, -1.119278e-002, -2.183205e-002, -1.529107e-002, 2.044282e-002, 1.564545e-002, 5.164927e-003, -5.270412e-003, 1.806973e-002, 5.026608e-003, 7.951445e-004, -1.582321e-002, -1.435951e-002, -1.212051e-002, -3.772347e-003, 6.062128e-003, 1.029659e-002, 2.227554e-003, -1.837535e-003, 2.654042e-003, 1.839145e-002, 9.295915e-003, 7.838531e-003, -9.660318e-003, -1.284397e-002, -8.441353e-004, 5.047033e-003, -9.321932e-003, -1.085024e-002, -9.380937e-003, 3.149953e-004, 9.783257e-003, 1.496021e-002, 8.376316e-003, -2.698750e-004, -2.171546e-003, -1.568865e-003, -4.487136e-003, -7.366036e-003, -9.757253e-003, -6.244387e-003, -3.679568e-003, 1.554066e-003, 2.496864e-003, 1.387317e-002, 1.732901e-002, 2.262497e-003, -5.956215e-003, -1.714828e-002, -1.271137e-002, 3.513840e-003, -9.277361e-003, -1.765139e-002, -1.554394e-002, 3.757732e-003, -1.155641e-003, 1.150676e-003, -1.006473e-002, -5.692363e-003, -1.060990e-002, -8.285879e-003, -4.448051e-003, -2.194683e-003, -3.416449e-003, -1.603989e-003, 1.044593e-002, 1.855367e-002, 1.013375e-002, 8.150475e-003, -1.460847e-002, -2.601272e-002, -7.545203e-003, 1.082210e-002, 1.446391e-003, -7.471557e-003, -1.208376e-002, -8.647067e-003, -1.827040e-003, 3.654399e-003, -2.488186e-004, -6.168007e-003, -9.577725e-003, -8.261781e-003, -6.313750e-003, -5.665893e-003, 1.267772e-003, 1.093996e-002, 1.188570e-002, 9.562394e-003, -1.328102e-003, -9.984633e-004, 3.012010e-003, -9.985086e-004, 3.872720e-003, 5.973521e-003, 3.320914e-003, 2.895975e-003, -1.468666e-002, -3.407779e-002, -2.533513e-002, -1.225458e-002, -1.551194e-002, 1.033663e-003, 1.894131e-002, 1.985904e-002, -1.820302e-003, -3.556738e-003, -7.378333e-003, -6.297413e-003, -3.398409e-003, -2.650815e-003, 1.740660e-003, 4.854965e-003, 1.070228e-003, 3.581102e-003, -1.027502e-002, -1.617497e-002, -8.580585e-003, 8.669863e-003, 7.113008e-003, 6.678009e-003, -9.663498e-004, -8.894752e-003, -5.338369e-003, -1.478295e-003, -3.555520e-003, -5.797732e-003, -9.417913e-003, -1.044780e-002, -6.370631e-003, -7.018318e-004, -2.874550e-003, 1.437826e-003, 6.168129e-003, -5.342287e-003, -1.990977e-002, -2.254647e-002, -1.836149e-002, -1.915645e-002, -6.837466e-003, 6.202017e-003, 5.138419e-003, 1.177304e-002, 2.723844e-003, -1.321320e-002, -4.498630e-003, -8.421798e-003, -1.175228e-002, 1.396519e-002, 2.709745e-002, 2.018175e-002, 3.236452e-003, -7.084787e-004, -8.051411e-003, -6.209791e-003, -1.960565e-003, -8.839636e-003, -1.491338e-002, -1.041027e-002, -1.303881e-002, 1.375193e-003, -2.086248e-003, -3.447003e-003, -7.347667e-003, 6.413479e-004, 2.682428e-003, 5.800585e-003, 5.730558e-003, 1.203722e-004, -8.833393e-003, -1.287265e-002, -1.866484e-002, -1.774618e-002, -1.683426e-002, -1.211631e-002, -6.795713e-003, -1.075862e-003, 5.190467e-003, 5.176017e-003, 3.632819e-003, -5.714502e-003, -2.047494e-002, -1.770453e-002, -6.473083e-003, -1.265279e-002, -8.146606e-003, -1.223577e-002, -2.907196e-003, 1.093809e-002, 1.203580e-002, 7.303223e-003, 1.226231e-002, -5.044439e-003, 3.884995e-003, 3.216894e-002, 2.602172e-002, 1.578619e-002, -5.756815e-003, -4.067340e-003, 4.726705e-003, 7.056725e-003, 9.317858e-003, -1.283268e-002, -1.829433e-002, -7.312336e-003, 4.622730e-004, 9.379020e-003, 1.653936e-002, 7.572779e-003, 1.117748e-004, 3.578945e-003, 3.519125e-003, 3.963961e-003, 7.549747e-003, 1.264090e-002, 9.395051e-003, 2.324726e-003, -4.118359e-003, -2.862352e-003, -2.133363e-003, -3.584096e-003, -2.609640e-003, -4.604563e-004, -1.480144e-003, -5.280201e-003, -4.041145e-003, -6.263290e-003, -6.830327e-003, 8.062778e-003, 8.916840e-003, -1.447582e-002, -4.328588e-003, -1.895272e-002, -2.034476e-002, -6.809297e-003,

© ISO/IEC 2004 — All rights reserved


Copyright International Organization for Standardization
Provided by IHS under license with ISO
No reproduction or networking permitted without license from IHS
Not for Resale

6.607484e-003, 5.682558e-003, 7.073069e-003, -1.336405e-002, 3.313690e-003, 3.087422e-002, 2.059787e-002, 8.776571e-003, -9.432234e-003, 4.349555e-003, 1.423953e-002, 1.573835e-002, 3.296127e-003, -1.584125e-002, -3.037433e-003, 1.884990e-002, 2.247278e-002, 1.310808e-002, 1.439378e-002, 1.576309e-002, -1.405730e-003, 3.416422e-003, 7.873181e-003, 4.739994e-003, 5.192780e-003, 1.291167e-002, 1.412710e-002, 1.338324e-002, 1.048310e-002, 7.935528e-003, 4.909924e-003, 9.315660e-004, -4.512207e-003, -8.584155e-003, -1.177115e-002, -9.999167e-003, -2.619442e-003, 6.697027e-003, 1.652915e-002, 3.247534e-002, 2.132980e-002, -1.905570e-003, 6.795414e-003, 1.274415e-003, -9.137182e-003, -8.699276e-003, -6.198728e-003, -1.029806e-002, -3.251609e-003, -1.745364e-002, -2.444705e-003, 2.217388e-002, 1.309988e-002, 9.249696e-003, -1.174623e-003, 3.837081e-004, 8.174062e-003, 8.349907e-003, -1.247694e-002, -2.175432e-002, -1.030571e-002, 1.296193e-004, -4.642721e-003, -1.868939e-002, -2.857346e-002, -1.710440e-002, -1.926214e-002, -1.955151e-002, -1.483107e-002, -7.961138e-003, 4.427587e-003, 1.292119e-002, 1.962176e-002, 2.464211e-002, 2.387609e-002, 1.994952e-002, 1.522081e-002, 1.170843e-002, 3.718777e-003, 4.244566e-004, -1.879565e-003, 2.205928e-003, 1.189745e-002, 1.895793e-002, 2.563070e-002, 3.498934e-002, 1.960183e-002, 1.352994e-003, 1.315567e-002, 3.476610e-003, 2.869524e-003, 9.149177e-003, -1.627528e-003, -2.137389e-002, -2.304132e-002, -3.305720e-002, -2.138916e-002, 8.703943e-003, 2.335232e-003, 7.172541e-003, 1.954351e-003, 1.194915e-002, 2.666916e-002, 3.202969e-002, 1.879428e-002, 1.461991e-002, 1.748964e-002, 1.458158e-002, 3.829389e-003, -6.687761e-003, -1.746721e-002, -1.601114e-002, -9.257537e-003, -1.013198e-002, -7.252987e-003, -6.032006e-003, 1.062076e-003, 9.809181e-003, 1.324983e-002, 1.735294e-002, 1.764620e-002, 1.559939e-002, 1.147246e-002, 3.768211e-003, -3.436676e-003, -9.218808e-003, -9.633390e-003, -5.776411e-003, -9.577489e-003, -1.305483e-002, -1.531223e-002, -2.252538e-003, -1.059239e-002, -1.441866e-002, -6.320366e-003, -1.302706e-002, 5.424234e-003, 4.457252e-002, 5.720664e-002, 3.841710e-002, 2.646026e-002, 4.148777e-002, 5.440412e-002, 7.726943e-002},
{-4.405458e-002, -4.111148e-002, -2.849141e-002, -7.123611e-003, 3.749018e-003, 8.274585e-003, 1.272218e-002, 2.809605e-003, 1.477578e-003, 1.493537e-002, 2.044550e-002, 1.816851e-002, 1.407161e-002, 3.643575e-003, 1.414288e-003, 2.276565e-003, 4.094038e-003, 2.469693e-003, -8.406196e-003, -1.470853e-002, -1.798064e-002, -2.072549e-002, -2.376211e-002, -2.159673e-002, -1.940360e-002, -1.541661e-002, -1.406948e-002, -1.367082e-002, -1.300519e-002, -7.354383e-003, -2.262090e-003, 4.490541e-003, 4.981126e-003, -1.380123e-003, -6.759437e-003, 1.703059e-004, 9.432017e-003, 8.373928e-003, -1.522873e-004, 1.837614e-003, 2.138749e-002, 2.614838e-002, 1.446870e-002, 2.489326e-002, 2.715027e-002, 2.498763e-002, 7.959378e-004, 3.051799e-003, 1.130914e-002, 2.333482e-002, 2.109030e-002, 2.237096e-002, 1.922043e-002, 6.087530e-003, 1.410030e-002, 2.052433e-002, 1.501799e-002, 2.487661e-003, -8.662315e-003, -6.434441e-003, 1.840683e-003, 2.038129e-003, 1.919020e-003, -1.095535e-003, -1.619932e-003, -6.046041e-004, -2.026042e-003, -1.269377e-003, -2.285288e-003, 4.447179e-004, 2.839335e-003, 1.076836e-003, 3.926939e-003, 7.746666e-003, 6.874539e-003, 3.879746e-003, -7.329269e-003, -9.689729e-003, -4.191843e-004, 4.549373e-003, -1.968868e-003, -1.400881e-002, -1.175984e-002, 1.274889e-003, 1.097409e-003, -6.995340e-003, -2.237778e-003, 1.404573e-002, -3.804198e-003, -2.393245e-002, -1.050526e-002, -1.734377e-003, 1.053069e-002, 1.410368e-002, 1.859024e-002, 1.739039e-002, 6.435688e-003, 1.077920e-002, -2.555866e-003, 8.749731e-004, 2.062961e-002, 1.269091e-002, 3.421982e-003, -4.367038e-003, -1.022795e-003, 5.215032e-003, 3.780277e-003, -4.587446e-003, -1.397055e-003, -3.339566e-004, -3.027160e-003, -8.289362e-003, -1.443413e-002, -1.605859e-002, -1.493389e-002, -7.854669e-003, -6.148718e-003, -3.956282e-003, -3.761016e-003, -1.250915e-003, 2.262350e-003, 5.772139e-003, 4.410604e-004, -1.545682e-002, -1.773807e-002, -7.606987e-003, 5.966137e-003, 1.262614e-004, -1.255543e-002, -8.819390e-003, 9.973088e-003, 4.348377e-003, -1.191142e-002, 3.770303e-003, 1.771308e-003, -2.982531e-002, -2.965198e-002, -2.626526e-002, 1.520121e-002, 2.239737e-002, 1.383994e-002, 8.525695e-004, 5.560593e-003, 4.753234e-004, -1.001192e-002, 1.022108e-002, 1.333446e-002, 4.432988e-003, 3.556221e-003, 9.386159e-003, 1.243080e-002, 6.963403e-003, 1.891316e-003, 2.980236e-003, 3.885468e-003, -1.596363e-003, -8.981102e-003, -1.659329e-002, -2.268518e-002, -2.382757e-002, -1.697491e-002, -8.064958e-003, -2.418838e-003, -1.172494e-003, -4.017374e-004, -2.169849e-003, -4.769611e-003, -2.714078e-003, 3.984244e-003, 7.390797e-004, -1.056042e-002, -2.004103e-002, -1.235019e-002, 9.205101e-003, 5.980532e-003, -6.525036e-003, 6.969309e-003, 1.472936e-002, -1.196277e-002, -9.235263e-003, 1.269403e-002, -5.816973e-003, -2.685260e-002, -3.979258e-002, 1.757139e-002, 2.168446e-002, 4.543039e-004, 3.687251e-003, 1.547370e-002, 2.945165e-005, 3.089678e-003, 1.796701e-002, 1.359913e-002, 8.566594e-003, 1.467392e-002, 1.329854e-002, 1.250615e-002, 1.097067e-002, 1.041746e-002, 1.276038e-002, 1.029539e-002, 2.969086e-003, -1.092837e-002, -2.398477e-002, -2.884109e-002, -3.474646e-002, -2.769881e-002, -1.285610e-002, -1.165061e-003, 5.777115e-003, 8.011317e-003, 4.493032e-003, -1.204003e-003, -7.457650e-003, -6.468585e-003, -1.533154e-003, -2.411936e-004, -1.029856e-003, -1.391880e-002, -6.632402e-003, 1.111365e-002, 5.434208e-003, -1.150164e-003, 8.040778e-003, -7.651017e-003, -2.155143e-002, 8.164993e-003, 1.414484e-002, -9.711037e-003, -4.030411e-002, 1.717506e-002, 1.466678e-002, -6.738090e-003, 1.136298e-002, -3.883987e-004, -9.934909e-003, 1.895010e-003, 1.304271e-003, -2.543458e-004, 6.059224e-003,


© ISO/IEC 2004 — All rights reserved

Copyright International Organization for Standardization
Provided by IHS under license with ISO
No reproduction or networking permitted without license from IHS
Not for Resale

3.145472e-003, 7.645010e-003, 1.432207e-002, 1.681287e-002, 2.023614e-002, 2.671243e-002, 2.457391e-002, 8.203241e-003, -1.779675e-002, -3.449989e-002, -4.159833e-002, -4.422308e-002, -3.253508e-002, -1.569294e-002, 3.795197e-003, 1.197774e-002, 1.166449e-002, 6.247784e-003, 1.207719e-003, -7.719772e-003, -1.492786e-002, -1.611482e-002, -8.556910e-003, 3.135582e-003, 2.888309e-003, -2.536600e-003, 4.964514e-003, 7.216160e-003, 2.191366e-003, 1.795048e-003, -1.471743e-004, -1.864773e-002, -2.575997e-003, 1.916881e-002, 8.525709e-003, -3.724503e-002, 9.649362e-003, 5.673953e-003, -8.410040e-003, 8.613406e-003, -1.170862e-002, -1.659405e-002, 1.681012e-003, -3.224626e-003, 3.396528e-003, 5.307835e-003, 1.139134e-003, 4.566385e-003, 1.069783e-002, 2.388570e-002, 4.097198e-002, 4.564640e-002, 3.419593e-002, 1.768903e-002, -8.496635e-003, -2.711013e-002, -3.059287e-002, -2.518150e-002, -1.542243e-002, 3.762059e-004, 1.775651e-002, 2.397623e-002, 1.767986e-002, 4.790721e-003, -3.400306e-003, -1.116278e-002, -1.633510e-002, -1.915605e-002, -1.698893e-002, -4.201541e-003, 7.342373e-003, 1.317281e-002, 8.620434e-003, 4.810433e-004, 3.228836e-003, 4.652017e-003, 8.500153e-003, -9.787567e-003, -1.393204e-002, 1.309357e-002, 2.414330e-002, -1.824952e-002, -1.331914e-003, -3.791557e-003, -1.046191e-002, 5.088439e-003, -2.009398e-002, -1.515985e-002, -5.807761e-004, -4.190884e-003, 3.786087e-003, 1.116225e-003, -4.017567e-003, -6.873305e-003, 7.756827e-003, 2.646710e-002, 4.580478e-002, 4.549935e-002, 3.695999e-002, 2.079016e-002, -3.934554e-003, -1.912947e-002, -1.839210e-002, -6.082563e-003, 8.864268e-003, 2.712444e-002, 3.743243e-002, 3.358205e-002, 1.131010e-002, -9.613742e-003, -2.291589e-002, -3.023915e-002, -3.146193e-002, -2.546440e-002, -1.610291e-002, -1.286795e-002, -4.792229e-003, 7.449937e-003, 1.709422e-002, 5.799968e-004, -6.162303e-003, 1.046297e-003, 4.160961e-003, 2.192053e-003, -1.513072e-002, 6.461181e-003, 3.534829e-002, 6.594837e-004, -1.030961e-002, -7.374858e-003, -3.847930e-003, 9.109298e-003, -2.218254e-002, -5.467671e-003, -1.008590e-002, -1.054924e-002, -1.393385e-003, -5.212743e-003, -1.392655e-002, -1.034053e-002, 3.756649e-003, 2.379283e-002, 3.723951e-002, 3.789659e-002, 3.481358e-002, 1.836652e-002, -2.921216e-003, -1.125170e-002, -5.505911e-003, 1.357313e-002, 3.555847e-002, 5.594511e-002, 6.059299e-002, 4.275303e-002, 1.232445e-002, -1.711459e-002, -3.586664e-002, -4.619155e-002, -4.797938e-002, -3.772261e-002, -2.452474e-002, -1.257030e-002, -1.075538e-002, -7.136002e-003, 8.038062e-003, 9.271454e-003, -1.058709e-002, -8.576527e-003, -9.275242e-004, 1.212697e-002, -6.676421e-003, 3.752902e-003, 3.338609e-002, 9.240713e-003, -1.751459e-002, -4.491437e-003, 5.979922e-003, 8.151465e-003, -2.180358e-002, -6.252810e-003, -2.201080e-002, -1.371694e-002, -3.170538e-003, -9.676604e-003, -2.024496e-002, -1.108508e-002, 2.437081e-004, 1.270649e-002, 2.227477e-002, 2.289820e-002, 1.961213e-002, 5.829273e-003, -7.155209e-003, -7.169460e-003, 8.465870e-003, 3.189716e-002, 5.732405e-002, 7.551639e-002, 7.379880e-002, 5.041715e-002, 1.806133e-002, -1.285639e-002, -3.603793e-002, -5.075801e-002, -5.369967e-002, -4.310496e-002, -2.914093e-002, -1.823335e-002, -1.648023e-002, -1.290097e-002, -1.494285e-003, 1.037726e-002, -7.006603e-003, -1.729521e-002, -7.732174e-003, 8.404619e-003, 8.088758e-003, 6.787554e-003, -3.623468e-005, 1.898241e-003, -2.087056e-002, -2.025397e-002, 1.286619e-002, 4.356760e-003, -2.232929e-002, -8.289813e-003, -2.347573e-002, -7.969969e-003, -2.289279e-003, -1.394012e-002, -1.404318e-002, -1.027944e-002, -7.945911e-003, 4.230931e-003, 1.155564e-002, 1.060031e-002, 1.564498e-005, -1.524951e-002, -2.312679e-002, -1.649498e-002, 5.177004e-003, 2.758498e-002, 5.146561e-002, 7.151605e-002, 6.853673e-002, 5.017092e-002, 2.058324e-002, -8.786653e-003, -2.570544e-002, -3.707201e-002, -4.186988e-002, -3.174371e-002, -1.470073e-002, -1.206475e-002, -1.333959e-002, -1.314586e-002, 2.465774e-003, 9.713751e-003, -2.043977e-003, -1.530793e-002, -1.455356e-002, 7.607028e-003, 1.302019e-002, 8.339537e-003, -1.728471e-002, -1.114983e-002, -2.384883e-002, -1.733448e-002, 1.905374e-002, 1.262502e-003, -1.693908e-002, -7.782991e-003, -1.476458e-002, -3.155297e-003, -1.474787e-003, -1.091159e-002, -7.323867e-003, -9.324755e-003, -6.556193e-003, 3.267805e-003, 4.590639e-003, 8.815983e-004, -1.725780e-002, -3.499561e-002, -4.264104e-002, -3.522021e-002, -1.634688e-002, 3.000172e-003, 2.351963e-002, 4.687540e-002, 5.021010e-002, 3.710872e-002, 1.381627e-002, -9.976781e-003, -2.317696e-002, -2.748563e-002, -2.756674e-002, -1.484005e-002, 5.606139e-003, 1.269149e-002, 2.288474e-003, -2.806666e-003, 1.118396e-002, 1.676209e-002, 3.757351e-003, -1.023787e-002, -1.235513e-002, 7.532262e-003, 1.270810e-002, 1.203562e-002, -2.773696e-002, -2.020633e-002, -2.476411e-002, -1.188348e-002, 2.073436e-002, -1.501925e-003, -6.753543e-003, -2.667702e-003, -3.176487e-003, 3.816533e-003, -9.810150e-004, -2.170399e-003, 1.249139e-003, -9.020412e-004, 5.357242e-003, 8.753122e-003, 3.281347e-003, -1.017716e-002, -3.202310e-002, -4.933811e-002, -5.750899e-002, -5.043939e-002, -3.188488e-002, -1.754017e-002, -3.463394e-003, 1.433098e-002, 1.865755e-002, 1.547327e-002, 5.601848e-003, -8.133114e-003, -1.897149e-002, -1.784850e-002, -1.284978e-002, 5.789263e-003, 2.639690e-002, 3.921748e-002, 2.727813e-002, 1.348826e-002, 1.674955e-002, 3.041520e-002, 1.253881e-002, -4.522223e-003, -6.422157e-003, 7.284786e-003, 1.122163e-002, 1.923045e-002, -1.913811e-002, -2.197939e-002, -2.275385e-002, -1.542636e-002, 1.286918e-002, -8.986989e-004, 2.647506e-004, 3.820785e-004, 4.808875e-003, 5.713066e-003, -4.550148e-003, 3.316757e-003, 6.532364e-003, 2.539924e-003, 9.151854e-003, 8.669271e-003, 1.608385e-003, -1.242521e-002, -3.474081e-002, -5.290367e-002, -5.791944e-002, -5.650145e-002, -3.972277e-002, -2.978405e-002, -2.044163e-002, -1.187910e-002, -9.373979e-003, -6.723641e-003, -

© ISO/IEC 2004 — All rights reserved


Copyright International Organization for Standardization
Provided by IHS under license with ISO
No reproduction or networking permitted without license from IHS
Not for Resale

3.841891e-003, -6.703044e-003, -1.193302e-002, -5.532771e-003, 8.132214e-003, 2.606954e-002, 4.168715e-002, 5.262443e-002, 4.449075e-002, 2.403907e-002, 1.856721e-002, 3.485903e-002, 1.982779e-002, -6.710945e-003, -1.411078e-004, 1.731928e-002, 7.514953e-003, 2.463574e-002, -6.912292e-003, -1.758125e-002, -1.534974e-002, -1.378881e-002, 2.924094e-003, -5.757350e-004, 4.471741e-003, -1.381892e-003, 6.632056e-003, 2.158202e-003, -7.974404e-003, 7.149154e-003, 1.769249e-003, -1.714842e-003, 2.115314e-003, 3.778516e-003, 1.083036e-003, -7.901941e-003, -2.234976e-002, -3.487183e-002, -4.219275e-002, -4.387434e-002, -3.125331e-002, -2.553155e-002, -2.188404e-002, -1.796888e-002, -1.947550e-002, -2.186070e-002, -9.615271e-003, -2.888551e-003, -1.155866e-003, 5.330083e-003, 1.918363e-002, 2.952028e-002, 4.294129e-002, 5.098367e-002, 4.953731e-002, 2.563285e-002, 1.686944e-002, 2.815402e-002, 1.744462e-002, -1.232673e-002, -3.877862e-004, 2.825386e-002, 7.751500e-003, 1.916674e-002, 1.257075e-002, -2.209432e-003, -4.134069e-003, -9.975839e-003, -1.235788e-003, -4.229101e-003, 5.826304e-003, -1.260306e-003, 1.115573e-003, -9.265686e-004, -6.239816e-003, 4.337753e-003, -7.319851e-003, -5.998645e-003, 5.624659e-003, 1.069626e-002, 1.092818e-002, 9.291117e-003, 1.582718e-003, -1.010661e-002, -2.096195e-002, -2.236275e-002, -1.564076e-002, -1.375024e-002, -1.325763e-002, -1.136997e-002, -1.226796e-002, -1.817424e-002, -1.379819e-002, -4.535460e-003, 5.990478e-004, 1.073143e-002, 1.895758e-002, 2.805285e-002, 3.811367e-002, 4.405905e-002, 4.223043e-002, 1.694387e-002, 9.064499e-003, 2.239085e-002, 1.720635e-002, -1.149900e-002, -1.628405e-003, 2.895075e-002, 7.702851e-003, 1.978922e-002, 3.231192e-002, 1.561800e-002, 1.152609e-002, -4.629792e-003, -4.385421e-003, -6.782634e-003, 7.029823e-003, -2.624756e-004, -8.841248e-003, -6.554528e-003, -1.077231e-003, -8.634338e-004, -1.812494e-002, -1.043504e-002, 9.759964e-003, 2.042020e-002, 2.496933e-002, 2.378732e-002, 2.093156e-002, 8.575202e-003, -7.816972e-003, -1.231650e-002, -1.101931e-002, -7.484577e-003, -4.895010e-003, -1.168184e-003, -4.347761e-003, -1.473975e-002, -2.364630e-002, -1.647618e-002, -7.452722e-003, 4.896229e-003, 1.077219e-002, 2.030382e-002, 3.162206e-002, 3.720777e-002, 3.176281e-002, 3.487178e-003, -1.265107e-002, 1.029800e-002, 1.215711e-002, -1.346588e-002, -7.781926e-003, 1.846240e-002, -5.766671e-004, 8.653484e-003, 4.126388e-002, 2.689234e-002, 2.650798e-002, 6.129020e-004, -1.003557e-002, -9.747755e-003, 5.050809e-003, -4.148960e-003, -1.447955e-002, -9.341060e-003, -3.455555e-003, -8.779486e-003, -2.699121e-002, -1.050166e-002, 8.833588e-003, 2.102979e-002, 2.928877e-002, 3.079734e-002, 2.203343e-002, 9.467729e-003, -3.784193e-003, -1.097943e-002, -1.174273e-002, -3.449968e-003, 4.658573e-003, 8.355635e-003, 2.129713e-003, -1.482682e-002, -2.998610e-002, -2.916970e-002, -2.050470e-002, -1.041345e-002, -3.002859e-003, 5.079689e-003, 1.367986e-002, 1.908402e-002, 1.211868e-002, -1.430348e-002, -4.125620e-002, -1.057687e-002, 5.419840e-003, -1.301339e-002, -1.384256e-002, 7.420569e-003, -1.357293e-002, -8.422308e-003, 3.876158e-002, 4.599385e-002, 3.624390e-002, 1.847096e-003, -1.251514e-002, -1.185888e-002, -2.592281e-003, -1.075752e-002, -2.037108e-002, -1.624776e-002, -9.485399e-004, -1.025359e-002, -2.208167e-002, -3.222392e-003, 8.503186e-003, 1.329387e-002, 1.231668e-002, 7.757581e-003, -3.465914e-003, -8.212232e-003, -1.343296e-002, -1.073849e-002, -3.775674e-003, 3.945477e-003, 1.546142e-002, 2.046031e-002, 1.361457e-002, -4.373262e-003, -1.481532e-002, -1.634059e-002, -1.735372e-002, -1.407023e-002, -5.981533e-003, -2.079025e-003, 5.398210e-003, 6.824584e-003, 4.529123e-003, -2.645723e-002, -6.499547e-002, -3.842476e-002, 4.881227e-004, -4.434204e-003, -1.166009e-002, -3.130959e-003, -2.417292e-002, -2.404746e-002, 2.173984e-002, 4.934564e-002, 2.896980e-002, 2.032859e-003, -1.357597e-002, -1.735386e-002, -9.316743e-003, -1.206999e-002, -2.359183e-002, -1.471940e-002, 2.390343e-003, -9.525207e-005, -9.641542e-003, -7.239368e-004, -9.611653e-004, -1.485450e-003, 5.280658e-003, 6.562250e-003, -4.837974e-003, -1.820979e-002, -2.363964e-002, -1.493323e-002, 8.955515e-003, 2.539163e-002, 4.142306e-002, 4.661935e-002, 4.410164e-002, 3.563375e-002, 3.173202e-002, 2.580217e-002, 2.035737e-002, 1.670805e-002, 1.543245e-002, 6.039871e-003, -7.974409e-003, -1.610749e-002, -1.166390e-002, -1.866096e-002, -6.014810e-002, -4.618178e-002, -2.883779e-004, -1.083154e-003, -1.026058e-002, -7.843360e-003, -2.996894e-002, -3.581980e-002, -1.718434e-003, 3.559015e-002, 2.651875e-002, 3.420316e-003, -7.619993e-003, -1.632814e-002, -1.399494e-002, -4.952321e-003, -1.233014e-002, -6.146974e-003, 8.590134e-003, 1.251050e-002, -1.348579e-002, -2.540530e-002, -3.565587e-002, -2.091625e-002, 1.508591e-002, 4.662732e-002, 3.917366e-002, 1.477901e-002, -6.524368e-003, -1.491934e-002, -2.329154e-003, 4.288400e-002, 6.891494e-002, 7.035348e-002, 6.855313e-002, 4.977809e-002, 3.014981e-002, 2.487899e-002, 3.441354e-002, 4.133473e-002, 3.103411e-002, 8.545376e-003, -2.721953e-002, -5.121421e-002, -4.867787e-002, -3.008880e-002, -4.081405e-002, -4.149877e-002, 1.590975e-003, -1.509657e-003, -8.046334e-003, 1.541854e-003, -1.675701e-002, -3.113827e-002, -1.777878e-002, 2.719416e-002, 6.097328e-003, 1.280732e-002, 1.180023e-003, -4.563536e-003, -1.178083e-002, 8.337367e-003, 4.131627e-003, -1.753516e-003, 1.361356e-002, 1.933455e-002, -1.955057e-002, -3.717315e-002, -4.581775e-002, -2.861658e-002, -5.122761e-003, 1.530849e-002, 1.462965e-002, -6.921394e-003, -3.403456e-002, -4.179480e-002, -2.440265e-002, 2.541013e-002, 5.431352e-002, 4.536606e-002, 4.089403e-002, 2.118824e-002, -1.785698e-002, -1.820918e-002, -4.490088e-003, 7.007520e-003, 6.618734e-003, -1.599646e-002, -3.905741e-002, -5.680616e-002, -5.634438e-002, -3.494222e-002, -1.710995e-002, -2.321207e-002, 1.324765e-003, 3.166557e-003, 5.055155e-003, 1.682556e-002,


© ISO/IEC 2004 — All rights reserved

Copyright International Organization for Standardization
Provided by IHS under license with ISO
No reproduction or networking permitted without license from IHS
Not for Resale

5.248591e-003, -2.005466e-002, -3.260060e-002, 1.932277e-002, 1.845651e-003, 1.671346e-002, 4.195614e-003, -3.192446e-003, -1.427780e-002, 1.175124e-002, 9.716578e-003, -1.033690e-003, 2.051959e-002, 2.483561e-002, -4.450236e-003, -1.845987e-002, -1.136585e-002, -1.477735e-003, -4.557764e-004, 1.827261e-002, 2.768057e-002, 1.692301e-002, -1.609790e-002, -3.796889e-002, -2.468892e-002, 7.954132e-003, 2.339492e-002, 1.505985e-002, 1.625709e-002, -2.043680e-003, -2.958666e-002, -2.576132e-002, 8.085228e-003, 3.529574e-002, 5.294816e-002, 3.655748e-002, 1.660174e-002, -9.233009e-003, -3.295421e-002, -2.529454e-002, 7.166309e-003, 6.734037e-003, 1.479128e-002, 3.224412e-003, 1.103827e-002, 2.010620e-002, 4.677179e-003, -2.019453e-002, -5.870932e-002, -2.388750e-002, 7.409918e-003, 1.671359e-002, -5.121864e-003, 1.820251e-003, -1.107678e-002, 6.832090e-003, 9.772739e-003, -1.391040e-002, 4.971258e-004, 1.085422e-002, 1.522454e-002, 2.449751e-002, 2.294354e-002, -2.984019e-002, -6.411928e-002, -4.976368e-003, 6.199594e-002, 5.318905e-002, 4.002606e-002, 2.716132e-002, 5.305808e-003, 1.046129e-002, -5.924706e-003, -2.033169e-002, -6.660400e-003, 2.673524e-003, 9.015800e-003, 1.925195e-002, 1.274012e-002, 1.490479e-002, 3.306383e-002, 1.409857e-002, -2.306200e-002, 1.143724e-002, 2.049549e-002, 7.779775e-003, 1.826023e-002, 2.352766e-002, 2.495548e-002, -1.030583e-002, 4.647665e-003, 9.148840e-003, -5.011683e-003, -2.840817e-002, -6.676287e-002, -3.432133e-002, -7.661493e-003, 1.366263e-002, -8.239298e-003, 1.158485e-002, -6.249924e-004, 1.342551e-002, 1.955766e-002, -1.206886e-002, -2.437846e-002, -1.593770e-002, 4.870998e-003, 2.808261e-002, 2.530912e-002, -1.462647e-003, -3.287686e-002, 3.044574e-002, 8.257597e-002, 7.657588e-002, 9.069466e-002, 5.080010e-002, 3.508167e-002, 1.664639e-002, -1.714020e-002, -3.181269e-002, -2.080460e-002, 1.262465e-002, 3.255938e-002, 6.512223e-002, 6.470707e-002, 2.953121e-002, 4.724137e-002, 4.545543e-002, -1.941414e-002, 4.017687e-003, 4.590167e-002, 4.303899e-002, 3.525995e-002, 1.071768e-002, -9.808862e-004, -2.539749e-002, -1.467791e-003, -5.907732e-003, -1.044950e-002, -1.232865e-002, -5.130624e-002, -3.046595e-002, -7.437896e-003, 1.207365e-002, -3.078392e-003, 1.762586e-002, 1.750168e-002, 2.523688e-002, 2.769482e-002, -3.259030e-003, -1.854806e-002, -1.664141e-002, 5.994172e-003, 1.928928e-002, 7.247728e-003, -1.557537e-002, -2.774536e-002, -1.767699e-002, -1.545919e-003, 1.189244e-002, 1.818718e-002, 4.553216e-003, 2.739653e-002, 2.397621e-002, -1.133032e-002, -2.132997e-002, -1.253537e-002, 8.963034e-003, 1.686092e-002, 2.397034e-002, 2.578382e-002, 1.269506e-002, 4.011953e-003, 2.414686e-003, -3.768505e-003, -8.650095e-003, 9.601239e-003, 2.578779e-002, 2.810886e-002, 4.006557e-004, -1.783400e-002, -3.178917e-002, -5.713939e-003, -1.337849e-002, -1.563395e-002, 1.366754e-002, -2.285440e-002, -1.809854e-002, -2.266904e-003, 1.824468e-002, 4.103808e-003, 2.501721e-002, 2.830230e-002, 4.042354e-002, 3.098257e-002, 2.962677e-003, -9.590175e-003, -1.445812e-002, 2.267773e-002, 3.112717e-002, 3.668800e-003, -4.026933e-002, -7.691893e-002, -9.524432e-002, -9.229679e-002, -7.934801e-002, -5.990475e-002, -2.560401e-002, 3.291022e-002, 2.542341e-002, 5.533371e-003, -3.802325e-003, 4.002766e-003, -3.483007e-003, 8.836514e-003, -1.508590e-002, -2.819996e-002, -5.038730e-002, -6.652998e-002, -6.119449e-002, -4.769487e-002, -2.463213e-002, 7.840844e-003, 2.825770e-002, 2.779553e-002, 3.927330e-004, -1.768486e-002, -1.362885e-002, 7.168915e-003, -7.718920e-003, -4.885030e-003, 3.630367e-002, 7.259167e-003, -4.976979e-003, 2.295194e-003, 1.915473e-002, 2.297082e-003, 2.503038e-002, 2.376288e-002, 3.546793e-002, 2.442478e-002, 5.601965e-003, -1.192608e-003, -1.044192e-002, 2.482635e-002, 3.599348e-002, 1.033395e-002, -3.539674e-002, -7.726900e-002, -9.415000e-002, -9.221239e-002, -8.153654e-002, -5.990269e-002, -4.523254e-003, 4.141671e-002, 2.637524e-002, 1.849965e-002, 1.240832e-002, 1.709732e-002, -4.368266e-003, 1.298552e-002, 2.716552e-003, -2.589238e-002, -4.391110e-002, -5.967764e-002, -5.515126e-002, -3.836307e-002, -9.811124e-003, 1.737575e-002, 3.150406e-002, 2.334251e-002, -2.921864e-003, -1.248757e-002, 2.785770e-003, 2.179223e-002, 6.782234e-003, 9.436035e-003, 4.517118e-002, 2.169942e-002, 7.550386e-003, 1.663475e-004, 1.389377e-002, 2.432892e-003, 1.625952e-002, 1.161449e-002, 7.581351e-003, 9.095083e-003, 7.561675e-003, -3.079286e-003, -1.158450e-002, 1.178708e-002, 3.247226e-002, 1.574013e-002, -1.154933e-002, -4.188956e-002, -5.273623e-002, -4.750820e-002, -3.446398e-002, -1.564579e-002, 2.578185e-002, 3.390777e-002, 3.617617e-002, 2.857515e-002, 2.442940e-002, 3.490259e-002, 3.840513e-003, -5.515492e-003, 2.639017e-002, 1.951375e-002, -4.374692e-003, -1.896968e-002, -1.561947e-002, -3.481232e-003, 1.465423e-002, 3.200988e-002, 2.860502e-002, 8.328174e-003, -1.181638e-002, -1.569373e-002, 1.479853e-002, 2.208425e-002, 1.768397e-002, 1.185972e-002, 2.516880e-002, 1.362581e-002, 1.078386e-002, -7.129001e-003, 4.387764e-003, -4.562527e-004, 7.589330e-003, 2.089834e-003, -1.298730e-002, -7.751989e-003, 3.418130e-003, -1.061994e-002, -2.310626e-002, 6.622505e-004, 2.125838e-002, 1.758902e-002, 7.145521e-003, 3.072844e-003, 4.711212e-003, 8.399786e-003, 5.873879e-003, 1.258755e-003, 1.429045e-002, 3.060589e-002, 4.347706e-002, 2.817687e-002, 2.678846e-002, 4.451679e-002, 2.688113e-002, -2.224795e-002, -8.387635e-003, 2.936368e-002, 3.460028e-002, 2.492449e-002, 2.197835e-002, 2.630857e-002, 3.244721e-002, 3.276413e-002, 1.058924e-002, -1.054299e-002, -2.439747e-002, -1.493162e-002, 1.696913e-002, 3.521542e-003, 6.453195e-003, 5.369839e-003, 3.744863e-003, 1.444780e-003, 1.600204e-002, -3.538973e-002, -5.399745e-003, -8.552201e-003, 2.099423e-003, -3.228910e-006, -3.138563e-002, -2.616907e-002, -3.029205e-003, -1.226352e-002, -3.250990e-002, -2.368419e-002, -4.885563e-003, -

© ISO/IEC 2004 — All rights reserved


Copyright International Organization for Standardization
Provided by IHS under license with ISO
No reproduction or networking permitted without license from IHS
Not for Resale

4.294268e-003, -4.513519e-003, 1.845468e-003, 8.315319e-003, 3.916195e-003, -2.053884e-002, -2.586914e-002, -8.088941e-003, 2.998041e-002, 3.409871e-002, 1.689448e-002, 1.926943e-002, 4.694905e-002, 4.946264e-002, 1.008626e-003, -3.996239e-002, -2.495283e-002, 5.042441e-003, 1.735588e-002, 1.888960e-002, 1.358779e-002, 5.019765e-003, -5.493332e-003, -1.984850e-002, -2.783995e-002, -2.543223e-002, -6.578810e-003, 9.266561e-003, -9.994067e-003, -6.965681e-003, 6.913589e-003, -2.612137e-003, -1.292027e-003, 1.806143e-002, -3.130551e-002, -4.034873e-003, -8.961736e-003, -1.958014e-003, 3.321172e-003, -3.423227e-002, -3.442739e-002, -1.259797e-002, -1.387506e-002, -2.884854e-002, -2.499031e-002, -1.683808e-002, -1.523101e-002, -2.534866e-002, -2.988311e-002, -2.529426e-002, -3.059341e-002, -3.987302e-002, -2.889024e-002, -5.811810e-003, 1.879479e-002, 1.174057e-002, -3.500208e-004, 7.493285e-003, 3.660776e-002, 3.888115e-002, 1.089740e-002, -1.835202e-002, -3.559223e-002, -3.852472e-002, -3.371562e-002, -3.198099e-002, -3.179102e-002, -2.684049e-002, -2.622909e-002, -3.019904e-002, -2.228082e-002, -1.441300e-002, -8.592561e-003, -6.302956e-003, -2.235829e-002, -1.773269e-002, 2.200035e-004, -3.107841e-003, 3.808428e-003, 2.429268e-002, -2.252022e-002, 8.520959e-003, 1.033467e-003, -5.307996e-003, 3.519335e-003, -2.270496e-002, -2.873138e-002, -1.817166e-002, -1.123958e-002, -1.771105e-002, -1.359412e-002, -9.627591e-004, 1.599574e-003, -4.420496e-003, -8.239659e-003, -9.046512e-003, -1.663991e-002, -1.805126e-002, -1.267782e-003, 1.425721e-002, 1.610283e-002, 1.003689e-004, -1.691919e-002, 1.242977e-003, 2.977556e-002, 2.360291e-002, -6.058317e-003, 1.333533e-003, 8.082130e-003, -1.111933e-002, -2.597567e-002, -2.705591e-002, -2.402567e-002, -1.723415e-002, -1.650289e-002, -2.120412e-002, -1.196901e-002, -9.904343e-004, -9.236800e-003, -1.882372e-002, -3.042702e-002, -2.660621e-002, -1.283616e-002, 6.837614e-004, 1.852218e-002, 1.397458e-002, -2.104474e-002, 1.234599e-002, 2.770606e-003, -9.435429e-003, -1.000657e-004, -9.431748e-003, -9.095212e-003, -1.120306e-002, -1.464978e-003, -1.006344e-002, -1.498988e-003, 1.363246e-002, 2.194652e-002, 2.311240e-002, 1.827839e-002, 7.262251e-003, -5.608551e-003, -5.363693e-003, 1.255948e-002, 2.277422e-002, 7.097596e-004, -3.594387e-002, -4.362718e-002, -9.897624e-003, 7.037715e-003, 5.643209e-003, -1.193150e-002, -2.432645e-003, 1.951473e-002, 1.925974e-002, 5.169233e-003, -8.437661e-004, -1.649190e-004, 2.043095e-003, -5.236905e-003, -1.255487e-002, -1.863277e-004, 9.195386e-003, -6.272887e-003, -1.996512e-002, -2.100753e-002, -2.651874e-002, -2.028630e-002, 6.325136e-003, 1.509961e-002, 7.683865e-003, -2.314507e-002, 1.033657e-002, 5.419008e-004, -1.008598e-002, -4.130357e-003, 3.526771e-003, 1.034258e-002, 2.701081e-003, 9.615791e-003, -1.094596e-003, 3.833270e-003, 2.049708e-002, 3.039576e-002, 3.516776e-002, 2.873874e-002, 1.431696e-002, 6.872233e-004, 3.720652e-004, 1.503156e-002, 1.493092e-002, -3.501053e-003, -3.766509e-002, -5.213787e-002, -3.980909e-002, -3.068513e-002, -1.763974e-002, -1.781107e-002, -1.294313e-002, 5.173028e-003, 1.703631e-002, 1.697082e-002, 1.285335e-002, 1.424253e-002, 1.131230e-002, 2.939693e-003, -2.788038e-003, 1.185994e-002, 1.467165e-002, 2.029110e-003, -3.312851e-004, -6.046489e-003, -1.380825e-002, -1.422179e-002, 4.075088e-003, 1.452650e-002, 7.056824e-004, -1.815906e-002, 4.311214e-003, -2.203453e-003, -1.018551e-002, -6.594229e-003, 6.858729e-003, 2.070186e-002, 6.860114e-003, 8.147067e-003, 4.599778e-003, 1.946853e-003, 1.905763e-002, 3.408379e-002, 3.583180e-002, 2.397773e-002, 5.763211e-003, -4.120390e-003, 3.436604e-003, 1.156494e-002, 1.986806e-003, -2.212417e-002, -4.767626e-002, -5.172304e-002, -5.052217e-002, -4.459140e-002, -3.160996e-002, -2.217173e-002, -1.077927e-002, -2.061010e-003, 3.283285e-003, 5.200176e-003, 1.168964e-002, 1.515396e-002, 1.193817e-002, 1.961829e-003, 2.643614e-003, 2.262788e-002, 1.680538e-002, 1.597037e-002, 2.224630e-002, 2.978396e-002, 2.123499e-002, -1.418630e-003, 3.354710e-003, 1.904381e-002, -3.494686e-003, -1.672756e-002, 2.876885e-004, -9.899935e-003, -9.078161e-003, -6.648662e-003, -5.064510e-003, 1.228312e-002, 7.922011e-004, 3.538528e-003, 5.808376e-003, -1.476134e-003, 1.276045e-002, 2.555608e-002, 2.777080e-002, 1.289487e-002, -2.831418e-003, -2.618286e-003, 7.689148e-003, 6.083056e-003, -2.716061e-003, -1.572867e-002, -2.923938e-002, -4.002984e-002, -4.270430e-002, -2.984930e-002, -1.010750e-002, -1.561991e-003, -1.921195e-004, -3.635425e-004, -5.915927e-003, -1.248109e-002, 8.961113e-004, 9.042515e-003, 8.067876e-003, -7.353671e-004, 7.935095e-003, 2.479365e-002, 1.284924e-002, 1.824498e-002, 3.198312e-002, 4.679217e-002, 3.009342e-002, -4.624289e-004, 5.944087e-003, 2.688348e-002, -8.675883e-003, -8.426831e-003, -8.418402e-004, -8.522055e-003, -6.024975e-003, -6.717722e-003, -7.116339e-003, -3.226434e-003, -1.708736e-002, -5.152999e-003, 1.189380e-003, -2.647688e-003, 3.429721e-003, 1.264433e-002, 9.864509e-003, -9.253173e-004, -5.108187e-003, 9.810704e-004, 8.337003e-003, 2.750347e-004, 1.858232e-003, 2.790035e-003, -2.025467e-003, -1.004820e-002, -1.653456e-002, -8.961366e-003, 1.095222e-003, 6.272753e-003, 7.380940e-003, 1.009247e-002, 3.800118e-003, -1.526149e-002, -1.481090e-002, -5.602239e-003, -1.517288e-003, -6.255438e-003, 1.418620e-002, 2.152723e-002, 6.301242e-003, 1.637338e-002, 2.234899e-002, 2.235865e-002, 1.284094e-002, 9.922771e-004, 1.558285e-002, 2.176387e-002, -2.287539e-002, -2.452378e-003, -9.527419e-003, 2.373442e-003, -7.315319e-004, -5.450699e-003, -1.441193e-002, -1.560937e-002, -2.156988e-002, -8.404898e-003, -7.900565e-004, -2.000132e-004, -5.861056e-003, -3.047651e-003, -6.324973e-003, -1.464381e-002, -8.826748e-003, -3.097810e-003, 4.981520e-003, 9.101989e-003, 1.401989e-002, 1.963957e-002, 1.419066e-002, 1.043842e-002, 6.782715e-003, 3.584594e-003, -3.300205e-003, 1.423887e-003, 1.300464e-002,


© ISO/IEC 2004 — All rights reserved

Copyright International Organization for Standardization
Provided by IHS under license with ISO
No reproduction or networking permitted without license from IHS
Not for Resale

1.828900e-002, 1.447659e-002, -5.676968e-003, -2.052470e-002, -1.662023e-002, -1.019015e-002, -5.673662e-003, 1.709499e-002, 1.749732e-002, 1.880834e-004, 9.360218e-003, -1.338544e-003, -2.448600e-004, -1.671636e-003, 7.096362e-003, 2.535595e-002, 1.469699e-002, -2.306286e-002, 5.351544e-003, 7.975258e-004, 2.028952e-002, 8.451712e-003, -7.315684e-003, -1.798548e-002, -2.507682e-002, -1.283608e-002, -2.298819e-004, 2.310132e-003, 3.066133e-003, -7.478725e-003, -1.543881e-002, -1.799263e-002, -2.292782e-002, -1.868478e-002, -8.723598e-003, 1.286646e-003, 5.909620e-003, 1.201237e-002, 1.987936e-002, 2.601922e-002, 2.048623e-002, 1.692207e-002, 6.483393e-003, -7.203969e-003, -1.664528e-002, -1.823196e-002, -1.017678e-002, 5.495839e-003, 7.987093e-004, -1.640875e-002, -2.295860e-002, -1.581091e-002, -6.163257e-004, 1.153858e-002, 5.959878e-003, -1.057881e-003, 5.067354e-003, -9.875559e-003, -6.064573e-003, 7.483872e-003, 2.582579e-002, 3.013383e-002, 6.026228e-003, -3.008519e-002, 6.224996e-003, 2.402154e-003, 2.098738e-002, 7.740128e-003, -1.548869e-002, -1.786796e-002, -1.261225e-002, 1.182004e-003, 7.392898e-003, 4.310989e-003, 9.648586e-004, -3.200693e-003, -1.626481e-002, -2.045573e-002, -2.363447e-002, -2.968396e-002, -2.499714e-002, -1.864960e-002, -2.452662e-003, 2.379065e-002, 3.731652e-002, 4.241689e-002, 3.964158e-002, 3.579150e-002, 2.061732e-002, 4.408006e-004, -1.971766e-002, -3.254766e-002, -3.663286e-002, -1.609550e-002, -3.344342e-003, -1.184722e-002, -2.244028e-002, -1.626622e-002, 1.640537e-003, 6.388806e-003, -7.204740e-003, 2.933258e-003, 5.557058e-003, -1.108766e-002, -4.726757e-003, 1.274712e-002, 2.740836e-002, 2.341740e-002, 3.090661e-003, -2.624592e-002, 1.140771e-002, 7.497182e-004, 1.529166e-002, 3.805484e-003, -6.654858e-003, -5.017505e-003, 7.537978e-003, 1.351561e-002, 1.129954e-002, 5.356858e-003, 4.032744e-003, 1.920942e-003, -1.104307e-002, -1.116422e-002, -1.046250e-002, -2.034387e-002, -1.967478e-002, -1.052884e-002, 8.519110e-004, 1.797905e-002, 3.097938e-002, 4.043395e-002, 4.748436e-002, 4.323240e-002, 3.370718e-002, 1.518365e-002, -1.025077e-002, -3.391108e-002, -3.763732e-002, -1.795971e-002, 2.609127e-003, -5.602795e-003, -2.001960e-002, -1.658341e-002, -1.415083e-003, -6.957611e-003, -1.681431e-002, 7.282479e-003, 1.454836e-003, -1.297197e-002, -9.288770e-003, -2.954436e-003, 7.525627e-003, 8.292191e-003, -9.639269e-003, -1.891845e-002, 5.982237e-003, -7.637208e-003, 1.296841e-003, -5.874554e-003, -2.608210e-004, 1.642023e-002, 2.874135e-002, 2.787966e-002, 8.181691e-003, 1.703140e-003, 5.692935e-003, 2.589233e-004, -4.316494e-003, -2.135515e-003, 3.704649e-003, -5.943469e-004, 1.664514e-003, 4.678216e-003, 1.048567e-002, 2.403026e-002, 3.942169e-002, 5.114255e-002, 5.842652e-002, 5.607693e-002, 4.723656e-002, 2.893978e-002, 9.315333e-003, -4.543797e-003, -7.077867e-003, 3.954809e-004, 1.183846e-002, 2.567851e-003, -1.475538e-002, -1.544662e-002, -3.415951e-003, -1.815941e-002, -2.164134e-002, 6.352682e-003, -6.061390e-003, -1.041072e-002, -1.107109e-002, -1.663193e-002, -1.334562e-002, -2.306441e-003, -1.643470e-002, -1.236304e-002, 3.928005e-004, -1.309735e-002, -3.820951e-003, -7.252932e-003, 4.536290e-003, 3.636005e-002, 4.698475e-002, 3.227550e-002, -4.284222e-003, -6.529171e-003, 5.335699e-003, 4.846559e-003, -1.986904e-003, -3.761038e-004, 1.351689e-002, 1.589980e-002, 1.669468e-002, 8.002294e-003, 8.763239e-003, 1.432636e-002, 2.279594e-002, 3.078478e-002, 3.649495e-002, 3.475477e-002, 2.671165e-002, 7.187487e-003, -2.185934e-003, 2.187575e-003, 1.210431e-002, 1.780566e-002, 1.950757e-002, 3.905848e-003, -1.276232e-002, -1.628047e-002, -1.194091e-002, -2.342563e-002, -2.067154e-002, 7.586004e-004, -1.209418e-002, -8.840380e-003, -1.355887e-002, -1.673224e-002, -1.274487e-002, -1.660931e-003, -8.311498e-003, -4.666660e-003, -2.789351e-003, -1.149172e-002, 7.594512e-003, 4.145204e-003, 9.391884e-003, 3.623523e-002, 3.870438e-002, 1.204754e-002, -1.172979e-002, -4.367334e-003, 1.215179e-002, 1.089054e-002, -4.515329e-003, -7.391578e-003, 1.205292e-002, 2.898830e-002, 2.146415e-002, 7.820514e-003, 4.503968e-004, -1.647089e-004, 8.969532e-004, 9.947245e-003, 1.634914e-002, 1.483248e-002, 7.848139e-003, -4.488594e-003, -4.368101e-003, 4.442053e-003, 1.592185e-002, 2.195310e-002, 1.955575e-002, 2.674895e-003, -6.514581e-003, -8.085156e-003, -1.236006e-002, -1.542590e-002, -8.504269e-003, -2.661959e-003, -6.668721e-003, 3.210112e-003, -6.375727e-003, -6.664422e-003, -2.135526e-003, 6.418671e-003, -4.662119e-003, -6.470764e-003, -1.138242e-002, -1.403121e-002, 5.433865e-003, 1.019087e-002, -1.268380e-003, 5.755516e-003, 1.246174e-003, -2.483610e-003, -6.895443e-003, 8.056078e-003, 2.537504e-002, 2.166778e-002, -1.783386e-003, -1.047530e-002, 1.586710e-003, 2.394965e-002, 2.298041e-002, 1.029321e-002, -6.105964e-003, -1.529148e-002, -1.382452e-002, -5.745660e-003, 1.527509e-003, 3.724931e-003, 7.961102e-004, -2.451108e-003, 2.958811e-003, 1.141654e-002, 1.788494e-002, 1.747467e-002, 1.070255e-002, 1.503538e-003, 6.352861e-004, -3.568494e-003, -7.510879e-003, 6.140526e-003, 1.140444e-002, -7.276901e-003, -9.443200e-003, 5.238211e-003, 1.712371e-003, 5.087045e-003, 1.067288e-002, 1.518063e-002, -7.164732e-003, -8.783054e-003, -2.403362e-002, -1.508470e-002, 7.329070e-004, 6.160255e-003, -1.611386e-002, -2.480090e-002, -1.105329e-002, -3.098272e-003, -1.656899e-003, 1.549032e-002, 2.882801e-002, 1.967794e-002, 2.546805e-003, -1.116454e-002, -1.195143e-002, 9.699441e-003, 1.731423e-002, 1.033897e-002, -6.046293e-003, -1.580128e-002, -1.835085e-002, -1.621641e-002, -1.287243e-002, -5.739971e-003, -8.026530e-003, -7.575912e-003, -2.514636e-003, 7.020855e-003, 1.032571e-002, 7.825608e-003, 1.003943e-003, 5.672869e-003, 6.807722e-003, 1.213864e-002, 8.147529e-003, 2.228947e-002, 2.165771e-002, -7.442960e-003, -1.803533e-002, -3.259873e-003, -5.594371e-003, 1.130912e-002, 1.868705e-002, 1.688904e-002, -

© ISO/IEC 2004 — All rights reserved


Copyright International Organization for Standardization
Provided by IHS under license with ISO
No reproduction or networking permitted without license from IHS
Not for Resale

3.354792e-003, -7.515636e-003, -2.195451e-002, -1.395802e-002, 4.726578e-004, 2.120825e-003, -1.289143e-002, -2.771298e-002, 3.394433e-004, 4.008155e-003, -5.665519e-003, 9.580436e-003, 6.470873e-003, 2.848670e-003, -6.924436e-003, -1.437021e-002, -1.709209e-002, -6.818044e-003, 2.433630e-003, 2.887751e-003, -7.272717e-003, -1.292254e-002, -1.618455e-002, -1.793074e-002, -1.523649e-002, -1.135212e-002, -9.503310e-003, -8.707403e-003, -6.556266e-003, -5.129704e-003, -1.668272e-003, -4.715429e-004, -7.819283e-004, 8.591118e-003, 9.692736e-003, 1.575671e-002, 1.451488e-002, 2.899274e-002, 2.130332e-002, 7.370428e-003, 6.515701e-004, -6.729795e-003, -1.611190e-002, 6.134949e-003, 1.870283e-002, 1.032881e-002, -1.016766e-002, -5.891024e-003, -2.176777e-002, -1.885421e-002, -3.160595e-003, 2.312805e-003, -9.540909e-003, -1.431290e-002, 7.763540e-003, 8.798642e-003, -1.665782e-002, -5.551861e-003, -1.950957e-002, -1.910750e-002, -1.497134e-002, -1.167984e-002, -1.158334e-002, -1.400092e-002, -8.764503e-003, -8.082410e-003, -1.450465e-002, -1.451343e-002, -1.544616e-002, -1.461147e-002, -1.230808e-002, -1.179650e-002, -1.220164e-002, -9.238173e-003, -1.072621e-002, -1.100411e-002, -6.247330e-003, -1.759442e-003, 5.163311e-003, 3.851222e-003, 4.227589e-003, 4.217771e-003, 3.333102e-003, 1.673709e-002, 2.275624e-002, 1.974515e-002, 1.779017e-002, 6.167182e-003, -1.726688e-002, 1.053465e-003, 1.211760e-002, 9.064632e-004, -1.853922e-002, -6.285901e-003, -2.581998e-002, -1.584669e-002, 4.776193e-003, 1.021258e-002, 1.916857e-003, 4.024139e-003, 1.414650e-002, 4.660956e-003, -1.620155e-002, 5.577347e-003, -5.328092e-003, -1.580670e-002, -1.649474e-003, 1.667617e-002, 1.475940e-002, 5.767643e-003, 3.125608e-003, -1.180051e-004, -3.032919e-003, -6.551578e-004, -3.007083e-003, -7.993556e-003, -1.122596e-002, -1.166288e-002, -1.356896e-002, -1.750722e-002, -1.748687e-002, -1.735728e-002, -1.093925e-002, -1.964462e-003, 1.539582e-003, 2.860052e-004, 1.319672e-003, -8.748392e-003, -6.692911e-003, 2.615172e-003, 1.014330e-002, 7.876551e-003, 1.909961e-002, 2.349900e-002, -1.959826e-003, -7.460644e-003, -2.923376e-003, -7.575730e-003, -1.829938e-002, -2.969069e-003, -2.061157e-002, -2.164406e-002, -1.920630e-003, 7.133992e-003, -9.254388e-003, -1.491662e-002, -4.487041e-003, -1.934331e-002, -1.976306e-002, -4.531446e-004, -1.286785e-002, -2.382549e-002, -1.070028e-002, 1.751177e-002, 2.250359e-002, 5.390684e-003, -1.677782e-003, -5.799746e-003, -8.668178e-003, -3.370080e-003, -1.428718e-004, -3.434874e-003, -8.453004e-003, -1.124907e-002, -1.292784e-002, -1.737833e-002, -2.270472e-002, -2.067934e-002, -4.540569e-003, 5.752640e-003, 5.733402e-003, 2.085673e-003, 4.716402e-003, -7.310601e-003, -1.201465e-002, -1.130363e-002, -1.013972e-002, -2.719882e-002, -1.621179e-002, 9.533946e-003, 2.661868e-003, -2.957803e-003, -5.365610e-003, -1.455174e-002, -2.422140e-002, -5.615808e-003, -6.452805e-003, -1.786892e-002, -2.353125e-002, -2.521517e-004, -2.078752e-002, -3.080599e-002, -2.817834e-002, -3.002982e-002, -2.103954e-002, -5.205409e-003, -1.096180e-002, -2.466414e-002, -1.756257e-002, 8.798542e-003, 2.101492e-002, 1.587537e-002, 3.465734e-003, -1.055518e-002, -9.503021e-003, -2.534745e-003, 4.876549e-003, 8.004393e-003, 5.253266e-003, -6.397030e-004, -2.928691e-003, -7.722454e-003, -1.549328e-002, -1.238496e-002, -3.588287e-003, 5.121469e-003, 1.062954e-002, 7.851133e-003, 4.265464e-003, -6.473992e-003, -2.069781e-002, -1.880852e-002, -1.162767e-002, -2.503052e-002, -3.442209e-002, -1.149711e-002, -1.296490e-002, -9.560846e-003, -2.701804e-003, -1.726095e-002, -1.981330e-002, -7.964752e-003, 1.137912e-002, 8.943563e-004, -4.888167e-003, 2.286946e-002, 6.970644e-003, -9.916160e-003, -6.323768e-003, -3.753638e-003, 5.374501e-003, -4.931749e-003, -8.046009e-003, -3.241645e-003, -4.741569e-003, 1.846077e-002, 3.074811e-002, 2.381015e-002, 1.430569e-002, -7.861610e-003, -1.184122e-002, -5.076793e-003, 7.739251e-003, 1.311327e-002, 9.372401e-003, 3.948506e-003, -2.080788e-003, -6.068996e-003, -7.208701e-003, -6.118556e-003, 5.212847e-004, 6.815253e-003, 1.042153e-002, 1.026514e-002, 5.994722e-003, -8.266277e-003, -2.072059e-002, -1.469735e-002, -3.004861e-003, -6.985145e-003, -2.097365e-002, -1.144643e-002, -1.208230e-002, -1.987650e-002, -1.355177e-002, -1.191799e-002, 4.863092e-003, 1.810895e-002, 2.427663e-002, 1.042076e-002, 9.536619e-003, 3.625660e-002, 2.254189e-002, 6.182772e-003, 1.183519e-002, 1.413064e-002, 1.501592e-002, -3.385305e-003, 5.426418e-003, 1.578698e-002, 1.487398e-002, 2.971026e-002, 3.070212e-002, 1.969282e-002, 1.483893e-002, 4.810704e-004, -7.824792e-003, -7.885884e-003, 3.470331e-003, 1.032115e-002, 1.072555e-002, 4.118024e-003, -2.063860e-003, -5.048527e-003, -1.224828e-003, 1.975735e-003, 8.698704e-003, 8.968796e-003, 9.444761e-003, 6.683480e-003, 7.627617e-003, -2.771853e-003, -1.735211e-002, -9.194231e-003, 1.971675e-002, 5.477731e-003, -8.124561e-003, 2.765751e-003, 1.669340e-002, 1.065917e-003, -1.173651e-002, -1.252944e-002, 1.950642e-002, 4.277322e-002, 2.203956e-002, 9.746423e-003, 1.196619e-002, 1.186898e-003, -8.461634e-003, -5.091933e-004, 9.179483e-003, 1.819459e-002, 9.478726e-003, -6.625544e-003, 4.274696e-003, 9.777037e-003, 8.973314e-003, 1.012829e-002, 5.955689e-003, -3.980519e-003, -8.330378e-003, -1.119519e-002, -6.862959e-003, -6.320089e-003, -3.941144e-003, -3.311177e-003, -5.581585e-003, -8.763830e-003, -1.386796e-002, -1.428164e-002, -1.025048e-002, -1.297674e-003, 4.033087e-003, 3.444822e-003, 9.405927e-003, 1.343831e-002, 1.524428e-002, 7.033678e-003, 3.506565e-003, 1.195660e-002, 3.493492e-002, 2.509066e-002, 9.706362e-003, 1.303914e-002, 3.287518e-002, 3.282492e-002, 1.126565e-002, -2.664921e-003, 1.401307e-002, 3.554651e-002, 7.188013e-003, -3.830739e-003, -9.516206e-003, -4.144321e-003, 8.070921e-003, 2.735284e-002, 3.549642e-002, 4.203880e-002, 3.057001e-002, 1.473210e-002, 2.402955e-002, 2.276006e-002, 2.653218e-002, 2.037830e-002,


© ISO/IEC 2004 — All rights reserved

Copyright International Organization for Standardization
Provided by IHS under license with ISO
No reproduction or networking permitted without license from IHS
Not for Resale

1.513440e-002, 7.645311e-003, 1.445035e-003, -5.280337e-003, -3.618797e-003, -6.857160e-004, 3.609884e-003, 5.710837e-003, 5.432478e-003, 4.156024e-003, -1.211829e-003, -2.924537e-003, -2.359450e-003, -4.255339e-004, 6.396945e-004, -7.304303e-004, 5.844359e-003, 9.062997e-003, 1.095078e-002, -1.279718e-002, -2.691735e-003, 1.366862e-002, 2.831397e-002, 1.407802e-002, 5.348185e-003, 2.413796e-003, 1.109261e-003, 1.251266e-002, -1.533788e-003, -6.123464e-004, 5.281259e-003, 2.219147e-002},
{2.616901e-002, 4.724681e-003, 1.668774e-004, -7.666032e-003, 7.857363e-004, 5.294789e-003, 3.668992e-003, 1.433756e-002, 2.211237e-002, 2.038414e-002, 5.876401e-003, -2.621604e-003, -2.834650e-003, 1.908246e-003, 6.038017e-003, 6.997180e-003, 1.137372e-003, -2.497914e-003, -5.357458e-003, -3.406328e-003, -1.612087e-003, 1.983711e-003, 8.481207e-003, 1.353731e-002, 1.282026e-002, 8.265816e-003, -2.976290e-003, -7.889858e-003, -8.029999e-003, -6.191005e-003, -3.097987e-003, -6.314178e-003, -1.482237e-002, -2.370232e-002, -2.902626e-002, -2.486830e-002, -2.807501e-002, -3.063414e-002, -1.277763e-002, 5.637018e-003, 9.386220e-003, 6.723490e-003, 1.556189e-002, -6.204120e-003, -1.121463e-002, -2.383075e-003, 1.603357e-002, -1.434008e-002, -2.576385e-002, -2.406640e-002, -1.388126e-002, -1.354475e-002, -2.393243e-004, 1.715585e-002, 2.096358e-002, 7.464071e-003, 9.800331e-004, 1.025838e-002, 1.916703e-002, 2.191255e-002, 2.195130e-002, 1.314263e-002, -1.422792e-003, -1.473473e-002, -1.436941e-002, -1.198905e-002, -5.643840e-003, 4.832830e-003, 1.526633e-002, 2.023046e-002, 2.299894e-002, 2.249167e-002, 1.125665e-002, 4.198686e-003, -3.284041e-003, -7.547316e-003, -5.212679e-003, 4.347899e-003, 8.778172e-003, -3.891671e-003, -1.292220e-002, -8.866123e-004, 9.814163e-003, 6.770105e-003, -4.430023e-003, 5.119945e-003, 1.516409e-002, 8.822107e-003, 1.165268e-002, 2.011760e-002, -2.646239e-003, -2.042172e-003, 9.896811e-003, -2.181920e-002, -2.424585e-002, -1.254274e-002, -6.478135e-003, -5.544473e-003, -2.536200e-003, -2.182586e-003, -1.135142e-002, -6.206196e-003, -4.342105e-003, 1.059582e-003, 5.260437e-003, 1.235925e-002, 1.207920e-002, -1.688058e-003, -2.226451e-002, -3.135333e-002, -3.276324e-002, -2.817480e-002, -1.865516e-002, -1.090826e-002, 2.702145e-004, 1.198170e-002, 1.804515e-002, 1.463643e-002, 5.928758e-003, -4.426155e-003, -1.129095e-002, -1.056320e-002, -1.016248e-002, -7.613736e-003, 8.320557e-004, 9.947411e-003, 3.680017e-003, -1.227808e-002, 8.313067e-003, 2.939265e-002, 1.791478e-002, 2.533298e-003, 9.061399e-003, 1.921412e-003, -2.817598e-003, 8.970064e-003, -5.318437e-003, -4.008375e-003, 9.100502e-003, -1.996385e-002, -1.069392e-002, 3.467741e-003, 4.524992e-003, -9.505540e-003, -2.117383e-002, -2.308556e-002, -7.856008e-003, -1.471890e-003, -1.993471e-002, -1.285761e-002, 1.017434e-002, 1.794722e-002, 5.369670e-003, -1.532058e-002, -2.722592e-002, -2.786481e-002, -2.027678e-002, -1.433444e-002, -1.013744e-002, -6.075394e-003, 6.941328e-003, 2.276421e-002, 2.824195e-002, 2.401581e-002, 1.368522e-002, -4.253221e-003, -1.906866e-002, -1.936259e-002, -1.002909e-002, 9.337577e-004, 9.023833e-003, 1.109017e-002, 1.890791e-002, 9.387189e-004, -7.140942e-003, 2.194435e-002, 2.963290e-002, 6.492708e-003, -3.348437e-003, -3.932926e-003, -1.418624e-002, -4.379784e-003, -8.635423e-003, -4.098639e-003, -4.359191e-003, -2.831523e-002, -1.733332e-002, -3.680633e-003, -1.037232e-002, -3.475685e-002, -4.048196e-002, -1.889055e-002, -4.448830e-003, -2.706369e-002, -3.350753e-002, -3.789571e-003, 1.644045e-002, 9.330548e-003, -3.317563e-003, -8.387028e-003, -5.005384e-003, 2.290795e-005, 2.678984e-003, 2.131318e-003, 4.953889e-004, 4.693624e-003, 1.921089e-002, 3.699746e-002, 3.933637e-002, 3.620257e-002, 3.083874e-002, 1.548756e-002, -7.434525e-003, -1.790789e-002, -1.407769e-002, -6.177913e-004, 1.295887e-002, 2.169200e-002, 2.419689e-002, 1.415615e-002, -7.756281e-003, -6.561753e-003, 1.659913e-002, 9.081889e-003, -1.375545e-002, -2.060392e-002, -1.089754e-002, -1.350649e-002, -1.488936e-002, -6.785620e-003, 3.102955e-003, -1.767310e-002, -3.616247e-003, 1.687289e-004, -2.618191e-002, -3.924527e-002, -2.314824e-002, -2.724199e-003, -1.900530e-002, -3.972917e-002, -1.602094e-002, 6.542903e-003, 4.174152e-003, -1.285761e-003, 9.407308e-004, 7.552718e-003, 5.240932e-003, 2.660914e-004, -1.061256e-002, -1.647203e-002, -2.286881e-002, -2.237644e-002, -7.233121e-003, 1.427225e-002, 1.904659e-002, 1.542146e-002, 1.397570e-002, 9.398908e-003, 7.937674e-004, -1.164984e-002, -1.439018e-002, -7.766464e-003, 8.094100e-003, 1.879031e-002, 1.985683e-002, 1.253594e-002, -2.897771e-003, -1.756360e-002, -1.314205e-002, -1.395223e-002, -2.669739e-002, -3.902322e-002, -2.454685e-002, -1.303655e-002, -2.054413e-002, -1.243634e-002, 1.251301e-002, -8.116260e-003, 3.485323e-003, 2.893762e-003, -2.018992e-002, -1.841900e-002, 3.567218e-003, 7.817541e-004, -2.627371e-002, -2.016489e-002, -5.828067e-004, 3.990965e-003, -2.463289e-003, 5.876668e-003, 1.287094e-002, 1.095854e-002, 4.052825e-003, -6.449764e-003, -1.838774e-002, -2.532868e-002, -3.266193e-002, -3.028101e-002, -1.727147e-002, 2.845327e-003, 1.216518e-002, 6.329694e-003, 5.216497e-003, 5.778708e-003, 6.663110e-003, 3.905357e-003, -3.780143e-003, -2.597748e-003, 2.317358e-003, 1.536767e-002, 1.896287e-002, 1.041586e-002, -2.978026e-003, -1.106272e-002, -1.708790e-002, -2.309664e-002, -2.696110e-002, -3.950222e-002, -3.810610e-002, -1.432358e-002, -1.392422e-002, -9.249557e-003, 2.087818e-002, -3.211756e-003, 2.143665e-003, 5.120964e-003, -3.991606e-003, 3.432074e-003, 7.029799e-003, 1.496540e-003, -1.086043e-002, -7.805287e-003, -6.011746e-003, 6.902077e-004, 9.545693e-003, 1.807637e-002, 1.915833e-002, 8.025798e-003, -7.018767e-003, -1.760000e-002, -2.088168e-002, -2.956665e-002, -3.413258e-002, -2.851504e-002, -2.074999e-002, 1.205385e-003, 1.365735e-002, 8.002784e-003, 9.529281e-003, 1.260268e-002, 1.390633e-002, 1.597894e-002,

© ISO/IEC 2004 — All rights reserved


Copyright International Organization for Standardization
Provided by IHS under license with ISO
No reproduction or networking permitted without license from IHS
Not for Resale

1.263134e-002, 8.290053e-003, 1.083946e-002, 9.991681e-003, 1.313620e-002, 9.578898e-003, -2.778845e-003, -7.350854e-003, -9.379619e-003, -1.836104e-002, -2.149850e-002, -3.179037e-002, -3.381964e-002, -1.749026e-002, -6.634890e-003, -1.940915e-003, 2.691486e-002, -7.035187e-003, -3.849167e-003, 1.314983e-002, 1.138022e-002, 3.396546e-003, 8.878847e-003, 8.061552e-003, 3.901757e-003, -8.756595e-003, -5.342025e-003, 9.525671e-003, 2.428855e-002, 2.758128e-002, 1.814821e-002, 3.783178e-003, -7.163769e-003, -1.327683e-002, -1.353886e-002, -1.541199e-002, -1.555715e-002, -1.215159e-002, -4.469591e-003, 9.866800e-003, 1.934890e-002, 1.957027e-002, 1.833701e-002, 1.745123e-002, 1.787629e-002, 2.022634e-002, 2.098292e-002, 1.604140e-002, 1.608367e-002, 9.067389e-003, 5.999929e-003, -3.449220e-004, -9.051067e-003, -9.210073e-003, -6.966033e-003, -1.405141e-002, -1.477608e-002, -1.209788e-002, -1.716362e-002, -3.692304e-003, 6.917215e-003, 6.230186e-003, 2.887824e-002, -1.357006e-002, -7.250997e-004, 2.216532e-002, 1.268911e-002, -7.577269e-003, 9.258815e-003, 1.649393e-002, 1.022447e-002, -6.552671e-003, 1.343080e-003, 1.518152e-002, 2.163800e-002, 1.588634e-002, 7.267534e-003, -5.799995e-004, -7.472535e-003, -7.376858e-003, -2.537907e-003, 1.838382e-003, 5.068852e-003, 2.059845e-003, 3.164584e-003, 7.931988e-003, 1.423623e-002, 1.588577e-002, 1.673513e-002, 1.537666e-002, 1.889476e-002, 1.492344e-002, 1.183282e-002, 1.366243e-002, 1.143135e-002, 7.918737e-003, -5.625920e-003, -1.395392e-002, -2.151034e-002, -2.018659e-002, -6.815229e-003, -4.972534e-003, -1.673975e-002, 3.447124e-004, 6.487766e-003, 1.363964e-002, 3.877525e-002, 2.691032e-002, 2.632213e-002, -2.623897e-004, 5.288848e-003, 2.878425e-002, 7.106091e-003, -1.270066e-002, 1.114892e-002, 2.048680e-002, 5.617143e-003, -5.118411e-003, -2.217956e-003, 7.140162e-003, 9.894554e-003, 2.423979e-003, -2.845543e-003, -7.490068e-003, -1.180403e-002, -9.313796e-003, 2.063759e-003, 1.107161e-002, 1.274244e-002, 5.961928e-003, 3.301957e-003, -3.013524e-003, -1.818275e-003, 1.346146e-004, 1.796556e-003, 2.219467e-003, 4.414677e-003, -1.214958e-003, -4.594455e-003, -5.990208e-003, -2.678547e-003, -7.498202e-004, -1.476340e-002, -2.601177e-002, -2.646484e-002, -2.905076e-002, -1.333741e-002, 3.269935e-004, -1.060351e-002, 6.071439e-003, 2.823672e-002, 2.655320e-002, 4.585455e-002, 4.556055e-002, 2.146888e-002, -4.740566e-004, 6.827006e-003, 2.765519e-002, 2.051014e-003, -1.235512e-002, 1.076544e-002, 1.647390e-002, 6.361071e-004, -6.217658e-003, -1.070972e-002, -2.686846e-003, 4.398714e-003, 1.262856e-003, -3.891969e-003, -8.680927e-003, -1.027063e-002, -3.660529e-003, 5.272714e-003, 1.151508e-002, 9.803962e-003, 9.635068e-004, -2.997854e-003, -1.337834e-002, -1.770224e-002, -1.520920e-002, -9.900657e-003, -1.247865e-002, -1.325245e-002, -1.742967e-002, -1.800744e-002, -1.587787e-002, -1.350106e-002, -1.060744e-002, -1.911341e-002, -2.912108e-002, -3.002121e-002, -3.197362e-002, -1.736417e-002, 8.122517e-003, 2.088018e-003, 1.221881e-002, 4.355712e-002, 3.626905e-002, 4.057675e-002, 5.153918e-002, 1.630255e-002, -2.438821e-003, 9.469331e-003, 1.444994e-002, -1.207270e-002, -1.399966e-002, 5.373178e-003, 6.059329e-003, -3.537178e-003, -8.671526e-003, -1.009225e-002, 1.614510e-003, 9.531339e-003, 8.510752e-003, 4.894767e-003, 1.715740e-003, 1.542256e-003, 6.184929e-003, 1.156152e-002, 1.362947e-002, 6.948181e-003, -3.181197e-003, -7.575317e-003, -1.369285e-002, -2.296681e-002, -1.596491e-002, -9.444350e-003, -1.793151e-002, -1.813199e-002, -1.964476e-002, -2.069087e-002, -1.712957e-002, -1.438571e-002, -1.539656e-002, -1.991986e-002, -2.590638e-002, -1.912473e-002, -1.929677e-002, -1.880866e-002, 7.656709e-003, 7.949932e-003, 8.577095e-003, 4.484462e-002, 4.212837e-002, 2.837878e-002, 3.967598e-002, 1.087880e-002, -2.855197e-003, 8.762725e-003, 7.729266e-003, -1.581586e-002, -7.442274e-003, -9.281085e-004, -1.807710e-003, -1.109661e-003, -2.593898e-003, -2.549093e-003, 6.495450e-003, 1.618230e-002, 1.386745e-002, 1.387483e-002, 1.633840e-002, 1.287918e-002, 1.171063e-002, 1.318094e-002, 8.999259e-003, 3.890694e-003, -1.772768e-003, -2.623399e-003, -4.718263e-003, -5.911940e-003, -6.866957e-004, 4.128813e-003, -4.068387e-003, -6.607458e-003, -6.433437e-003, -4.301723e-003, -3.493388e-003, -1.642524e-003, -3.973383e-003, -1.491672e-002, -1.775205e-002, -3.871216e-003, 1.180625e-003, -1.015709e-002, 6.858224e-003, 1.551924e-002, 7.470604e-004, 4.401794e-002, 3.628967e-002, 1.456183e-002, 2.344044e-002, 7.693288e-003, -2.776102e-003, 5.323036e-003, -2.692856e-003, -9.666946e-003, -5.230897e-003, -3.225604e-003, -3.468032e-003, 3.134526e-003, 3.937822e-003, -6.035608e-003, 1.018766e-002, 2.079554e-002, 1.900788e-002, 2.162430e-002, 1.955713e-002, 1.579876e-002, 8.774328e-003, 2.167654e-003, -3.045262e-003, -3.047422e-003, -3.181763e-004, 6.868115e-003, 1.062270e-002, 1.409349e-002, 1.436245e-002, 1.904748e-002, 1.804725e-002, 1.320430e-002, 1.382986e-002, 1.749230e-002, 1.713306e-002, 1.827440e-002, 1.481780e-002, 6.384271e-003, -5.129791e-003, 1.045666e-002, 1.954804e-002, 5.999165e-003, 1.731809e-002, 2.268703e-002, -9.299431e-003, 2.526981e-002, 2.645399e-002, -1.267233e-003, 8.984501e-003, -1.058410e-003, -1.811185e-003, 2.704041e-003, -3.411323e-003, 1.488220e-003, -7.821325e-003, -4.245559e-003, -3.997548e-003, 6.601536e-003, 4.176207e-003, -9.772551e-003, 8.298800e-003, 1.471169e-002, 1.116588e-002, 7.825014e-003, 5.076700e-003, 5.140522e-003, -6.200229e-003, -1.286800e-002, -1.598348e-002, -7.545568e-003, 4.216331e-003, 1.618171e-002, 2.557617e-002, 2.938090e-002, 2.606541e-002, 2.642606e-002, 2.408240e-002, 2.314275e-002, 2.494203e-002, 2.588469e-002, 2.587953e-002, 2.597163e-002, 2.661891e-002, 2.289510e-002, 1.079937e-002, 2.338755e-002, 3.344834e-002, 1.504748e-002, 2.429399e-002, 2.654727e-002, -1.597667e-002, 4.528183e-003, 1.447881e-002, -6.045944e-003, 5.336940e-004, -


© ISO/IEC 2004 — All rights reserved

--`,,```,,,,````-`-`,,`,,`,`,,`---
Copyright International Organization for Standardization
Provided by IHS under license with ISO
No reproduction or networking permitted without license from IHS
Not for Resale

3.848904e-003, 6.375082e-003, 2.480071e-003, -1.554866e-003, 7.686306e-003, -1.171515e-002, -5.987989e-003, -1.340181e-003, 9.470022e-003, -4.055295e-003, -1.530568e-002, -2.852308e-003, -7.875971e-003, -1.239942e-002, -1.298616e-002, -1.668074e-002, -2.364993e-002, -3.203475e-002, -3.564540e-002, -3.055095e-002, -1.260218e-002, 3.976028e-003, 1.782069e-002, 3.149525e-002, 3.187517e-002, 2.629199e-002, 1.806351e-002, 6.539471e-003, 7.101116e-004, -1.023590e-003, -1.497874e-003, 2.911338e-003, 8.955078e-003, 1.745349e-002, 1.707254e-002, 1.628930e-002, 2.725641e-002, 3.588053e-002, 1.845172e-002, 2.402138e-002, 2.429455e-002, -1.613345e-002, -5.256887e-003, 5.347290e-003, -5.264986e-003, -1.662186e-003, -4.747262e-004, 1.338913e-002, 6.673826e-004, 6.059030e-003, 8.786088e-003, -1.867847e-002, -1.587686e-002, -9.137625e-004, 6.911055e-003, -1.392761e-002, -2.469273e-002, -2.483301e-002, -2.580896e-002, -1.264977e-002, -6.221890e-003, -1.344568e-002, -3.300285e-002, -5.738766e-002, -7.164969e-002, -6.175958e-002, -3.242942e-002, -5.050375e-003, 1.484463e-002, 2.865754e-002, 2.426767e-002, 1.392010e-002, -3.903503e-003, -2.552316e-002, -3.429086e-002, -3.545152e-002, -3.238572e-002, -2.334933e-002, -1.374880e-002, -6.308896e-004, -1.173738e-004, 2.303787e-003, 1.473031e-002, 2.371668e-002, 1.178808e-002, 1.765012e-002, 1.542525e-002, -1.472705e-002, -9.555935e-003, -7.577355e-003, -5.477633e-003, 9.514975e-004, 9.856959e-004, 1.386408e-002, 2.949605e-003, 1.226629e-002, 1.061492e-002, -2.202059e-002, -2.522725e-002, -3.491439e-003, -6.182328e-003, -3.137107e-002, -4.444891e-002, -3.573841e-002, -1.655462e-002, 1.887539e-002, 3.294282e-002, 3.143100e-002, 1.153406e-002, -2.325309e-002, -5.359908e-002, -6.754056e-002, -4.858565e-002, -1.301386e-002, 1.316866e-002, 2.409106e-002, 1.687235e-002, 3.791393e-003, -1.000007e-002, -2.277783e-002, -2.351376e-002, -1.510138e-002, -4.706452e-003, 1.005225e-002, 1.471973e-002, 1.751697e-002, 9.660794e-003, -8.937017e-003, -9.762364e-003, -1.284609e-003, -3.985780e-003, 2.570951e-003, 4.618900e-003, -1.326010e-002, -7.836558e-003, -1.103989e-002, -7.716658e-003, -6.351656e-004, -2.914243e-003, 8.752499e-003, 2.813023e-003, 1.118842e-002, 9.609128e-003, -1.950870e-002, -2.777224e-002, -1.007604e-002, -2.889539e-002, -4.950973e-002, -4.491974e-002, -7.297924e-003, 1.665736e-002, 1.866751e-002, 5.692094e-003, 2.596573e-003, -5.477349e-003, -2.336010e-002, -3.999253e-002, -5.455451e-002, -5.259773e-002, -1.737860e-002, 1.499419e-002, 1.913813e-002, 7.550500e-003, -3.782370e-003, -1.595389e-002, -2.638162e-002, -2.049116e-002, -1.785719e-002, -4.691971e-003, 9.682435e-003, 1.933215e-002, 2.354318e-002, 1.923294e-002, 5.783708e-003, -1.497672e-002, -2.780663e-002, -2.331621e-002, -1.345048e-002, -2.618967e-003, -9.776576e-003, -5.592325e-003, -1.598128e-002, -6.043296e-003, 4.724190e-004, -7.038124e-003, 5.483019e-003, -1.256678e-002, 1.070953e-003, 1.124702e-002, -1.360703e-002, -1.649100e-002, -1.416782e-002, -4.413705e-002, -3.684753e-002, -4.940653e-003, 3.329008e-002, 3.020037e-002, 1.617035e-002, 4.787907e-003, -6.052922e-004, 1.418520e-003, 3.069192e-003, -1.076913e-002, -2.880327e-002, -4.457895e-002, -2.151563e-002, 4.596253e-003, 3.758128e-003, -9.975255e-003, -1.524500e-002, -1.793992e-002, -1.270278e-002, -5.793995e-004, 8.178348e-003, 2.482142e-002, 2.884573e-002, 2.194430e-002, 2.410243e-002, 2.377343e-002, 1.612358e-002, 4.943277e-003, -2.794595e-002, -3.923180e-002, -2.861455e-002, -1.059423e-002, -1.279836e-002, -5.199838e-003, -1.820696e-002, -2.197970e-003, 2.683749e-003, -1.318567e-002, 6.891014e-003, -1.426308e-002, -7.329598e-003, 1.487377e-002, 3.111925e-003, -5.496835e-003, -7.940162e-003, -2.629737e-002, 4.168067e-003, 3.334100e-002, 3.548337e-002, 3.244357e-003, -8.516939e-003, -1.982439e-003, 1.792099e-002, 2.519296e-002, 2.748927e-002, 3.082017e-002, 1.947688e-002, -1.707760e-003, -1.296605e-002, -3.951507e-003, -7.374946e-003, -2.139638e-002, -8.152979e-003, 1.456875e-002, 3.576087e-002, 5.560479e-002, 6.179758e-002, 5.434697e-002, 3.519161e-002, 1.901348e-002, 1.316275e-002, 1.375771e-002, 2.290944e-002, 2.588600e-002, -3.842917e-003, -3.026144e-002, -3.052588e-002, -1.017520e-002, -8.903142e-003, -7.978464e-003, -1.782920e-002, 8.538375e-005, 6.139615e-004, -8.134084e-003, 1.737253e-002, 1.542819e-003, -1.965132e-003, 2.117309e-002, 1.967669e-002, 1.155465e-002, 1.777889e-002, 2.665520e-002, 5.318992e-002, 4.343704e-002, 5.123236e-003, -3.409305e-002, -4.417664e-002, -2.358378e-002, 1.745819e-002, 2.341098e-002, -5.906425e-004, -5.110401e-003, 1.402620e-002, 2.649281e-002, 1.423566e-002, 2.257135e-002, 1.557466e-002, 2.920917e-003, 2.514389e-002, 2.692658e-002, 1.253471e-002, 1.669542e-002, 3.159060e-002, 5.593210e-002, 4.400419e-002, 8.830555e-003, -2.405304e-002, -3.238140e-002, -4.726069e-003, 3.493627e-002, 3.172064e-002, -4.352620e-003, -1.678053e-002, -3.767576e-003, 9.774933e-004, -6.715535e-003, -1.571996e-002, 1.832090e-003, -3.195996e-003, -8.859802e-003, 2.061227e-002, 1.931519e-002, -2.925063e-003, 1.339204e-002, 3.035057e-002, 2.202822e-002, 4.619155e-002, 6.218904e-002, 7.745953e-002, 6.039195e-002, 1.096865e-002, -3.188299e-002, -3.311246e-002, -1.258615e-002, 4.104479e-002, 3.154370e-002, -2.850058e-002, -4.614060e-002, -3.657484e-002, 1.567682e-003, 6.708973e-003, 3.379095e-002, 4.239455e-002, 3.844407e-002, 2.589089e-002, -1.655776e-002, -4.882295e-002, -6.473624e-002, -2.824347e-002, 5.663200e-002, 7.475833e-002, 4.673740e-002, 1.283827e-002, -3.447259e-002, -2.402201e-002, 3.478529e-002, 5.740046e-002, 3.180231e-002, 1.138293e-002, 1.387648e-002, 7.126807e-003, -1.144476e-002, -1.366467e-002, -4.750040e-003, -1.637483e-002, -3.409529e-002, 1.441491e-002, 1.517835e-002, -1.226195e-002, 1.105800e-003, 1.866801e-002, 2.101318e-002, 3.578705e-002, 5.068363e-002, 6.326703e-002, 6.050618e-002, 1.983351e-002, 9.772104e-004, -7.938611e-004, 2.180218e-002, 9.879304e-002,

© ISO/IEC 2004 — All rights reserved


--`,,```,,,,````-`-`,,`,,`,`,,`---

Copyright International Organization for Standardization
Provided by IHS under license with ISO
No reproduction or networking permitted without license from IHS
Not for Resale

6.092239e-002, -4.320465e-002, -7.480370e-002, -7.268714e-002, -2.907586e-002, 1.399063e-002, 3.549298e-002, 4.537993e-002, 4.662426e-002, 1.246888e-002, -4.799058e-002, -8.384031e-002, -9.338577e-002, -5.206069e-002, 7.011366e-002, 8.669523e-002, 2.475012e-002, 2.558430e-003, -1.318253e-002, -1.623667e-002, 2.129931e-002, 6.331468e-002, 5.471329e-002, 2.709080e-002, 2.985620e-002, 1.177016e-002, -1.316819e-003, -8.270774e-003, -1.857495e-002, -2.600363e-002, -3.363017e-002, 1.538271e-003, -2.964005e-003, -2.305233e-002, -5.818771e-003, 5.888865e-003, 5.209383e-003, 7.746573e-003, 2.082337e-002, 2.466989e-002, 1.499446e-002, -2.539941e-003, -1.494327e-002, -2.020750e-002, -2.024575e-002, -1.215729e-002, -3.286355e-002, -7.219192e-002, -8.629996e-002, -6.949761e-002, -3.928719e-003, 3.013997e-002, 1.564654e-002, 2.567107e-002, 2.971784e-002, 1.188774e-002, -2.198536e-002, -7.849089e-002, -8.436327e-002, -6.275031e-002, -1.714110e-002, 9.313377e-004, -1.059852e-002, -1.698285e-002, -3.156310e-002, -2.993446e-002, -3.475125e-003, 2.541990e-002, 1.336610e-002, 8.957416e-003, 2.433381e-002, 1.354248e-002, 1.494889e-002, 3.579530e-003, -1.652560e-002, -3.185623e-002, -3.609473e-002, -8.920136e-003, -9.248112e-003, -2.223442e-002, -7.138904e-003, -4.239171e-003, -8.149876e-003, -3.073813e-003, -1.315140e-002, -1.562592e-002, -1.588284e-002, -1.969581e-002, -1.911079e-002, -2.361329e-002, -3.842684e-002, -5.335413e-002, -6.750310e-002, -7.910966e-002, -7.518496e-002, -3.674936e-002, 1.050159e-002, 2.240607e-002, -9.909780e-004, 1.643209e-002, 1.691677e-002, 1.594007e-002, 1.169314e-002, -3.957139e-002, -7.083526e-002, -7.720123e-002, -6.315769e-002, -4.945016e-002, -3.710872e-002, -3.722334e-002, -4.648066e-002, -4.265595e-002, -2.311573e-002, -7.736696e-003, -8.512835e-003, -3.146912e-003, 4.301220e-003, 5.974370e-004, 1.930833e-002, 1.272190e-002, -8.436661e-003, -3.271332e-002, -3.640263e-002, -9.094096e-003, -4.099317e-003, -1.437172e-002, -6.839051e-003, -2.061230e-002, -2.402329e-002, -1.517276e-002, -3.691171e-002, -4.840977e-002, -3.336631e-002, -1.491346e-002, -8.265107e-003, -1.084456e-002, -2.040648e-002, -3.207661e-002, -3.997409e-002, -3.590446e-002, -1.387415e-002, 8.235566e-003, 3.652300e-002, 7.683963e-003, -6.122921e-003, 1.776695e-002, 1.461342e-002, 1.371808e-002, 2.309722e-002, 1.417269e-002, -1.035038e-002, -3.329496e-002, -3.918187e-002, -3.139618e-002, -2.206643e-002, -1.968056e-002, -2.524207e-002, -3.053703e-002, -2.977021e-002, -2.288326e-002, -1.534535e-002, -7.081171e-003, -1.610202e-002, -1.595194e-002, 8.425103e-003, 1.249356e-002, -2.088923e-003, -3.111997e-002, -3.458155e-002, -1.198784e-002, -6.682988e-003, 2.935627e-003, -4.918614e-003, -3.429682e-002, -3.743598e-002, -2.127655e-002, -4.346749e-002, -6.387453e-002, -4.810301e-002, -1.139003e-002, 2.393904e-003, 1.037832e-002, 1.103291e-002, 1.281821e-002, 1.679797e-002, 2.458742e-002, 3.212119e-002, 4.630849e-002, 4.179074e-002, -1.611793e-004, 2.318420e-003, 2.457613e-002, 2.155760e-002, 1.033071e-002, 1.857261e-002, 3.017110e-002, 2.844328e-002, 1.577905e-002, 1.127332e-002, 1.468728e-002, 1.851664e-002, 1.461195e-002, -1.978800e-003, -2.430074e-002, -3.645291e-002, -3.230807e-002, -1.707596e-002, -7.391391e-003, -1.988402e-002, -2.170604e-002, 2.655702e-003, 6.948634e-003, -2.832542e-003, -3.790086e-002, -3.533512e-002, -1.770143e-002, -1.455251e-002, 1.325789e-002, 1.038940e-002, -2.691243e-002, -3.347014e-002, -1.748056e-002, -4.235584e-002, -6.250746e-002, -5.063469e-002, -2.265264e-002, 3.636781e-003, 2.730387e-002, 3.647493e-002, 4.156866e-002, 3.920494e-002, 3.644527e-002, 4.304407e-002, 4.408858e-002, 1.461331e-002, -1.247029e-003, 1.206941e-002, 3.123316e-002, 2.950758e-002, 9.479139e-003, -2.092390e-003, 1.871182e-002, 3.151256e-002, 2.854262e-002, 2.830449e-002, 3.020902e-002, 3.322728e-002, 2.191891e-002, 8.725187e-004, -2.120043e-002, -3.962400e-002, -3.748325e-002, -2.027143e-002, -8.918559e-003, -1.696118e-002, -1.707807e-002, -1.497007e-003, -2.384749e-003, -9.420731e-003, -4.107058e-002, -4.877016e-003, -2.731113e-003, -1.078747e-002, 7.603024e-003, 1.542382e-002, -1.879131e-002, -2.051878e-002, -5.144912e-003, -2.805767e-002, -4.789457e-002, -4.088237e-002, -1.872380e-002, -4.704313e-003, 7.301149e-003, 1.547398e-002, 1.830962e-002, 2.005253e-002, 2.402146e-002, 3.062718e-002, 1.419828e-002, -1.075916e-002, -1.427495e-002, 1.806528e-003, 2.863162e-002, 2.938853e-002, 1.570486e-002, -4.803979e-003, -1.229211e-002, 3.903774e-003, 1.327267e-002, 2.314239e-002, 2.554621e-002, 2.608911e-002, 1.904820e-002, 4.124278e-003, -1.237617e-002, -3.339864e-002, -3.589456e-002, -1.526878e-002, -1.119661e-002, -7.820145e-003, -1.277786e-002, -2.558424e-004, 1.654238e-004, -1.210810e-002, -3.743557e-002, 5.752142e-003, 4.817719e-003, -8.142935e-003, -4.024070e-003, 2.002076e-002, -4.720327e-003, -8.129207e-003, 7.823288e-003, -8.727579e-003, -2.628068e-002, -2.299950e-002, -8.571565e-003, -4.302541e-003, -4.376158e-004, 3.651409e-003, 3.586360e-003, 6.262312e-003, 9.774985e-003, 1.234814e-002, -1.394007e-002, -2.679747e-002, -3.014023e-002, -1.502706e-002, 1.109875e-002, 1.131790e-002, 9.039288e-003, 1.186240e-002, -1.440877e-002, -1.913624e-002, -1.802546e-002, -5.905331e-003, 6.013042e-003, 1.132952e-002, 9.233498e-003, 3.460755e-004, -8.241673e-003, -2.675766e-002, -2.547906e-002, -5.055906e-003, -6.617428e-003, 1.744414e-003, -5.398517e-003, 4.711684e-004, 2.437196e-003, -1.513674e-002, -4.653476e-002, 1.656718e-002, 9.671632e-003, -8.437746e-004, -1.030214e-002, 1.744624e-002, 5.069045e-003, 9.921078e-003, 1.910339e-002, 4.092043e-003, -5.228175e-003, -1.444887e-003, 8.776874e-003, 7.433400e-003, 1.040749e-003, -2.963948e-004, -5.497834e-003, -7.455510e-003, 7.039974e-003, -5.362149e-004, -1.806654e-002, -1.619239e-002, -2.524732e-002, -7.772567e-003, 3.087347e-003, -1.730659e-002, -3.014995e-002, 7.658093e-003, 2.894666e-003, -2.137248e-002, -3.170824e-002, -2.863333e-002, -1.709620e-002, -


© ISO/IEC 2004 — All rights reserved

Copyright International Organization for Standardization
Provided by IHS under license with ISO
No reproduction or networking permitted without license from IHS
Not for Resale

4.209641e-003, 5.505018e-003, 4.653926e-003, 1.127064e-003, -1.582243e-002, -1.349860e-002, 2.999102e-003, 5.822051e-003, 1.079984e-002, -6.828574e-003, -1.277267e-002, -5.615778e-003, -7.782533e-003, -3.553653e-002, 1.987120e-002, 6.699563e-003, 3.039277e-003, -1.159048e-002, 4.494558e-003, 1.664836e-003, 1.152730e-002, 2.223376e-002, 1.467197e-002, 7.604794e-003, 1.460750e-002, 2.226810e-002, 1.936177e-002, 5.484670e-003, -4.651384e-003, -1.281174e-002, -7.403899e-003, 1.309680e-002, 5.240185e-003, 1.312072e-003, 4.852981e-003, -7.608492e-003, 5.193567e-003, 1.188102e-002, -1.210741e-002, -5.143977e-002, -2.671284e-002, -3.113864e-003, -1.421965e-002, -2.720691e-002, -2.574431e-002, -1.742012e-002, -1.288103e-003, 1.508840e-002, 1.780178e-002, 1.109427e-002, -4.608633e-003, -6.848740e-003, 4.260166e-003, 1.156802e-002, 1.297540e-002, -1.715908e-002, -2.771185e-002, -4.785801e-003, 6.298263e-003, -2.631934e-002, 2.849752e-002, 8.637530e-003, 6.348109e-003, 1.630015e-003, -6.385650e-003, -7.303186e-003, 6.117222e-004, 1.396733e-002, 1.779369e-002, 1.714392e-002, 2.313843e-002, 3.401305e-002, 2.743229e-002, 7.714356e-003, -6.314463e-003, -1.427063e-002, -7.255398e-003, 1.568044e-003, 5.811102e-003, 5.227130e-003, 1.169335e-003, -5.025461e-003, -1.670266e-003, -6.108803e-003, -2.390061e-002, -5.103546e-002, -5.066867e-002, -2.390754e-002, -1.520601e-002, -2.671331e-002, -2.298945e-002, -1.408167e-002, 2.420586e-003, 1.772505e-002, 2.627557e-002, 2.176667e-002, 2.934064e-003, -5.274768e-003, -8.231120e-004, 2.248124e-003, -2.387873e-003, -2.938594e-002, -2.905447e-002, 6.735848e-003, 1.815251e-002, -1.400147e-002, 3.056231e-002, 1.135402e-002, 9.255597e-003, 1.501599e-002, -1.210827e-003, -1.444663e-002, 1.406983e-003, 1.252013e-002, 1.638870e-002, 2.197670e-002, 2.277268e-002, 3.843553e-002, 3.373034e-002, 1.050198e-002, -5.682856e-003, -1.287179e-002, -1.276526e-002, -1.018359e-002, -7.836701e-005, 1.209942e-002, 8.437344e-003, 3.241520e-003, -5.566118e-003, -2.653373e-002, -2.947241e-002, -3.998351e-002, -3.624928e-002, -2.109502e-002, -1.279379e-002, -2.251207e-002, -2.105219e-002, -1.276513e-002, 4.283111e-003, 1.931171e-002, 3.246154e-002, 2.550026e-002, 4.806569e-003, -6.497980e-003, -8.737319e-003, -1.289568e-002, -7.979948e-003, -2.369524e-002, -1.918840e-002, 1.347243e-002, 1.888910e-002, 1.703440e-003, 2.565309e-002, 2.299202e-003, -2.981833e-003, 1.298502e-002, 5.709156e-003, -1.188541e-002, 1.099829e-002, 1.455991e-002, 1.644382e-002, 2.007537e-002, 2.029918e-002, 4.044402e-002, 3.686375e-002, 1.355279e-002, -6.720952e-003, -1.447218e-002, -1.493104e-002, -1.058624e-002, -1.374028e-003, 5.067415e-003, 2.428618e-003, 2.076515e-004, -1.157197e-002, -3.175627e-002, -3.670809e-002, -3.150627e-002, -1.847559e-002, -8.596683e-003, -1.103677e-002, -1.983422e-002, -2.552349e-002, -1.655757e-002, 2.738237e-003, 2.284145e-002, 3.717710e-002, 2.877031e-002, 1.067009e-003, -6.820130e-003, -1.025978e-002, -6.219510e-003, 3.508300e-003, 5.842807e-003, 3.413622e-003, 8.087414e-003, 1.313889e-002, 9.059514e-003, 2.526891e-002, 9.020660e-003, -2.022860e-002, 6.680761e-003, 9.756192e-003, -7.591614e-003, 2.550704e-002, 2.235824e-002, 1.415610e-002, 1.240233e-002, 1.392613e-002, 3.677827e-002, 3.702102e-002, 1.182739e-002, -1.028417e-002, -1.254050e-002, 3.270449e-004, 7.066032e-003, 7.704433e-003, 4.651726e-004, -2.027294e-002, -3.506047e-002, -4.362221e-002, -4.685518e-002, -4.657441e-002, -3.468062e-002, -9.480815e-003, 5.956704e-003, 5.647408e-003, -4.833743e-003, -2.485135e-002, -2.399871e-002, -2.172516e-003, 2.529957e-002, 3.973629e-002, 2.735311e-002, 2.672194e-003, 4.942826e-004, -1.611777e-003, 7.465631e-003, 2.829962e-002, 3.190036e-002, 3.406653e-003, -1.146208e-002, 8.083031e-003, 2.160038e-002, 2.391572e-002, -1.462444e-002, -2.949396e-002, -6.684482e-003, 8.727383e-004, -1.306957e-002, 1.946217e-002, 2.225368e-002, 8.211863e-003, 6.134190e-003, 6.496566e-003, 2.670186e-002, 3.010903e-002, 7.728805e-003, -1.178092e-002, 9.868333e-005, 3.168141e-002, 5.077660e-002, 3.810500e-002, 9.808006e-003, -2.373382e-002, -4.386788e-002, -5.226845e-002, -5.151720e-002, -3.971379e-002, -2.534213e-002, 5.489591e-003, 3.743042e-002, 4.708418e-002, 3.094811e-002, 3.096809e-003, -1.297849e-002, -1.940001e-003, 2.685010e-002, 4.005385e-002, 2.106186e-002, 4.783337e-003, -1.450903e-005, -5.550285e-003, 1.286490e-002, 3.607087e-002, 2.731332e-002, -1.030857e-002, -3.251486e-002, 1.609347e-003, 3.126912e-002, 2.712672e-002, -1.170088e-002, -2.937681e-002, -1.476153e-002, -5.051449e-003, -1.399863e-002, 6.256283e-003, 2.018515e-002, 2.688383e-003, -2.346782e-004, -6.249649e-004, 1.115753e-002, 1.798181e-002, -7.861374e-004, -8.860077e-003, 2.463122e-002, 7.356352e-002, 6.418892e-002, 2.619952e-002, 1.712331e-003, -1.202550e-002, -1.335546e-002, -1.238552e-002, -1.954612e-002, -6.865931e-003, -4.525887e-003, 9.132326e-003, 2.578205e-002, 3.346435e-002, 3.470213e-002, 2.958082e-002, 1.050866e-002, 2.436971e-003, 2.151439e-002, 2.594806e-002, 1.376682e-002, 8.620368e-003, 1.889585e-003, -6.707383e-003, 9.766984e-003, 2.488844e-002, 8.358293e-003, -1.899962e-002, -3.814397e-002, -3.112521e-003, 3.950089e-002, 2.844770e-002, -1.610373e-003, -2.461747e-002, -1.019151e-002, -5.321053e-004, -7.733657e-003, 2.736182e-003, 1.236091e-002, -1.361878e-003, -3.166520e-003, -4.584563e-003, -2.430485e-003, 2.543346e-003, -1.044664e-002, -1.199429e-002, 2.718201e-002, 5.555690e-002, 2.798638e-002, -1.470583e-002, -2.264516e-002, -2.292248e-002, -1.486963e-002, -6.132826e-003, -5.775934e-003, 3.536219e-003, -1.557948e-003, -7.670522e-003, -7.241858e-003, 1.085715e-003, 1.419766e-002, 1.871009e-002, 9.164323e-003, 7.351770e-004, 1.116206e-002, 1.204410e-002, 6.937709e-003, 9.973978e-003, 4.999085e-003, -5.198389e-004, 7.995943e-003, 1.072661e-002, 1.614092e-003, -1.789605e-002, -3.304828e-002, 1.010047e-003, 3.878204e-002, 2.388819e-002, 5.725791e-003, -

© ISO/IEC 2004 — All rights reserved


--`,,```,,,,````-`-`,,`,,`,`,,`---

Copyright International Organization for Standardization
Provided by IHS under license with ISO
No reproduction or networking permitted without license from IHS
Not for Resale

1.296881e-002, -6.410425e-003, 8.854724e-005, -8.592549e-003, -5.155930e-003, -8.016982e-004, -1.048323e-002, -8.572321e-003, -6.790742e-003, -1.163546e-002, -7.941921e-003, -1.899940e-002, -1.598475e-002, 1.063453e-002, 4.234619e-002, 4.663251e-002, 2.279035e-002, 1.597244e-003, -1.257296e-002, -2.972212e-002, -3.565970e-002, -3.260384e-002, -2.891316e-002, -1.909510e-002, -4.849304e-003, 1.072066e-002, 2.729959e-002, 3.259120e-002, 1.426307e-002, -5.791142e-003, -9.420477e-003, -1.105952e-003, 1.829789e-003, 2.514573e-003, 1.021737e-002, 5.599852e-003, 1.716386e-003, -9.628717e-004, 2.850773e-003, 2.302345e-003, -6.997424e-003, -6.505659e-003, 5.285138e-003, 3.109978e-002, 1.831279e-002, 8.881468e-003, -9.078786e-003, -2.918622e-004, 6.211647e-003, -5.609730e-003, -7.106557e-003, -5.900459e-003, -2.006784e-002, -1.184036e-002, -4.363912e-003, -1.157151e-002, -1.378082e-002, -2.125182e-002, -1.635150e-002, 4.541321e-003, 3.756637e-002, 6.214245e-002, 5.914699e-002, 3.701416e-002, 1.249803e-002, -1.224840e-002, -2.658342e-002, -3.002652e-002, -2.482293e-002, -8.194693e-003, 1.088239e-002, 2.970890e-002, 4.652187e-002, 3.730324e-002, 1.788170e-003, -1.779760e-002, -1.639336e-002, -5.539403e-003, -2.263131e-003, 1.520300e-003, 1.122113e-002, 4.453580e-003, -2.281241e-003, -1.361075e-002, -1.126033e-003, 8.728618e-003, 1.246180e-002, 1.173122e-002, 1.017376e-002, 2.323091e-002, 1.767428e-002, 2.205812e-003, -1.369608e-002, -4.793413e-003, 2.772426e-003, -2.342241e-003, -5.198100e-003, -6.353401e-003, -1.685139e-002, -6.683932e-003, 1.024527e-002, 5.373353e-003, -3.741644e-003, -1.488295e-002, -1.733291e-002, -1.265513e-003, 1.854388e-002, 3.463358e-002, 4.281365e-002, 3.736007e-002, 2.085773e-002, 3.518474e-003, -9.910359e-003, -1.428269e-002, -9.860826e-003, 1.768983e-003, 1.389993e-002, 1.836171e-002, 1.775780e-002, 6.974991e-003, -1.317580e-002, -2.255747e-002, -1.813039e-002, -9.515017e-003, -4.619544e-003, 6.303845e-003, 1.598670e-002, 1.221122e-002, -2.387287e-004, -1.236629e-002, 3.139161e-005, 1.014413e-002, 1.432199e-002, 1.163766e-002, 7.321233e-003, 1.158551e-002, 9.227627e-003, -7.245935e-003, -1.043101e-002, -2.133675e-003, 2.158264e-003, 1.557198e-003, 5.639896e-003, 8.199638e-003, -3.265284e-003, -1.110277e-003, 1.778980e-002, 2.008758e-002, 9.497046e-003, -3.158434e-004, -9.351135e-003, -2.183894e-003, 4.478706e-003, 7.103852e-003, 1.342109e-002, 1.733095e-002, 1.455118e-002, 1.195750e-002, 8.859449e-003, 8.051986e-003, 1.242371e-002, 1.649284e-002, 1.745620e-002, 1.267170e-002, 2.793090e-003, -1.248092e-002, -2.455112e-002, -2.583132e-002, -1.453813e-002, -6.122911e-003, -6.179324e-003, -2.758204e-004, 1.900947e-002, 2.147570e-002, -2.142360e-003, -6.274300e-003, -1.651095e-003, 4.748872e-003, 5.073805e-003, 4.852083e-004, -2.451129e-003, 3.933379e-004, 2.349321e-004, -4.676288e-003, 1.742105e-002, -3.090788e-003, 3.624688e-003, 6.131453e-003, 1.838387e-002, 1.636751e-002, 3.435246e-003, 3.234919e-003, 1.820396e-002, 8.933658e-003, 1.520190e-002, 1.576803e-002, 8.515012e-003, 4.038935e-003, -1.653298e-003, -9.093925e-003, -9.669697e-003, -7.939348e-003, -3.241369e-004, 5.499829e-003, 1.067942e-002, 1.791392e-002, 2.127494e-002, 2.012486e-002, 1.879039e-002, 1.481208e-002, 3.879584e-003, -1.163976e-002, -2.227933e-002, -1.743394e-002, -4.916048e-003, 4.881397e-003, -5.454421e-003, -1.125038e-002, 2.441020e-002, 2.707756e-002, 5.465053e-003, 1.071889e-002, -2.839648e-003, -2.497777e-003, -1.779392e-003, 2.242018e-003, -5.001492e-004, 2.969384e-004, -2.528139e-003, 1.561256e-003, 2.666976e-002, 3.016687e-003, 1.151885e-002, 5.172027e-003, 1.429074e-002, 1.330202e-002, 1.271896e-002, 2.712762e-003, 1.672711e-003, -1.046177e-002, 9.636161e-003, 2.081343e-002, 1.346931e-002, 8.524561e-003, -4.934495e-003, -1.982152e-002, -2.773381e-002, -2.490897e-002, -1.374671e-002, -2.863408e-003, 8.276592e-003, 1.559743e-002, 1.599653e-002, 1.614703e-002, 1.504700e-002, 1.294260e-002, 2.278172e-003, -9.662686e-003, -1.335319e-002, -8.750940e-003, 2.833595e-003, 1.030907e-002, -1.194091e-002, -1.029195e-002, 2.790480e-002, 1.177264e-002, 8.258928e-003, 2.724714e-002, 4.877294e-003, -5.863080e-003, -1.254495e-002, 1.150121e-003, 1.028781e-003, -5.246904e-004, -4.233790e-003, 3.093456e-003, 3.132760e-002, 8.088898e-003, 7.548607e-003, -5.265456e-003, -2.112314e-003, 4.354074e-003, 9.642018e-003, 8.591244e-003, -2.338097e-003, -1.591801e-002, -5.496219e-003, 9.607387e-003, 1.103327e-003, -3.104267e-003, -6.544348e-003, -1.968130e-002, -2.963866e-002, -2.611143e-002, -1.246052e-002, 2.237022e-003, 1.228310e-002, 1.812519e-002, 1.940764e-002, 1.663857e-002, 1.201561e-002, 6.660613e-003, -3.198402e-003, -1.193076e-002, -1.058526e-002, -1.089443e-003, 1.072046e-002, 9.249854e-003, -1.432273e-002, -1.250334e-003, 2.089747e-002, -3.361731e-003, -1.016788e-003, 3.276820e-002, 1.841740e-002, -5.195132e-003, -1.758858e-002, -5.084531e-003, 2.877038e-004, 2.130558e-003, -1.182801e-002, -5.273641e-003, 2.407509e-002, 7.726427e-003, -2.324062e-003, -8.329311e-003, -1.127414e-002, -4.628721e-003, 9.073258e-003, 1.175012e-002, -1.490123e-002, -2.263833e-002, -1.911567e-002, -4.814126e-003, -1.160230e-002, -2.406945e-002, -2.044650e-002, -1.649603e-002, -1.824766e-002, -1.551554e-002, -5.499513e-003, 6.240913e-003, 1.442339e-002, 1.772275e-002, 1.660768e-002, 1.528003e-002, 1.411914e-002, 4.969605e-003, -7.254932e-003, -1.112990e-002, -7.171149e-003, 5.771684e-003, 1.559973e-002, 6.387440e-003, -2.037370e-002, -3.042146e-003, 1.091899e-002, -1.278081e-002, -1.351024e-002, 2.298132e-002, 2.266628e-002, 4.392953e-003, -1.426631e-002, -1.387105e-002, -1.889818e-003, 2.211206e-003, -1.296548e-002, -3.474585e-003, 1.747614e-002, 1.823074e-003, 3.333965e-003, -7.768609e-004, -1.001583e-002, -1.336926e-002, 5.130290e-003, -2.877150e-003, -2.274387e-002, -1.358184e-002, -1.135220e-002, -2.171132e-004, 7.363499e-005, -1.747292e-002, -2.380310e-002, -1.519924e-002, -


© ISO/IEC 2004 — All rights reserved

Copyright International Organization for Standardization
Provided by IHS under license with ISO
No reproduction or networking permitted without license from IHS
Not for Resale

7.066733e-003, 1.176286e-003, 6.905430e-003, 1.383253e-002, 2.116613e-002, 2.138193e-002, 2.267963e-002, 2.561601e-002, 2.490085e-002, 1.043229e-002, -5.350061e-003, -9.423899e-003, -1.235157e-002, 3.595944e-003, 2.714498e-002, 1.668009e-002, -7.073943e-003, 2.228713e-003, 1.762113e-002, -1.186546e-002, -2.041109e-002, 1.658605e-002, 1.496308e-002, 2.985738e-003, -8.797655e-003, -1.509962e-002, -9.154728e-003, 6.456620e-004, -9.937370e-003, -3.323791e-004, 1.437983e-002, -3.719543e-003, 4.191190e-003, -1.748035e-004, 1.075675e-003, -6.270884e-003, -4.708812e-003, -1.871822e-002, -1.866058e-002, 8.966530e-003, 1.464773e-002, 2.928503e-003, 7.352746e-003, -1.938344e-003, -1.363227e-002, -1.963240e-002, -1.775125e-002, -1.019169e-002, -4.605386e-003, 4.297031e-003, 1.079539e-002, 1.297721e-002, 1.501283e-002, 1.624345e-002, 1.197661e-002, 1.130030e-003, -3.366652e-002, -3.459970e-002, -2.524843e-002, -6.815648e-003, 1.903309e-002, 1.243214e-002, -8.479817e-003, 1.884109e-003, 8.550017e-003, -1.038864e-002, -2.481222e-002, -9.281944e-003, -4.831743e-003, -5.265537e-003, -5.844633e-003, -4.338407e-003, -1.212349e-002, 5.906568e-003, -1.295256e-002, -5.674014e-003, 2.035796e-003, 1.427403e-002, 2.536368e-002, 3.091350e-002, 2.540577e-002, 3.784161e-003, -1.394227e-003, -5.186907e-003, 3.784740e-003, 2.999086e-002, 2.309689e-002, 1.996664e-003, -4.108957e-004, 8.981423e-003, 2.616308e-003, -1.015334e-002, -1.885669e-002, -1.888676e-002, -1.543103e-002, -1.519103e-002, -1.190339e-002, -9.196079e-003, -5.494320e-003, -5.572516e-003, -1.203115e-002, -2.413436e-002, -3.085487e-002, -2.868565e-002, -1.760643e-002, 1.353208e-003, 8.784626e-003, -6.242749e-003, -1.627900e-003, 7.214626e-003, 9.642011e-003, -1.012528e-002, -1.083403e-002, -8.489251e-003, -1.662834e-002, -1.169282e-002, 3.006467e-003, -7.413999e-003, -4.061305e-003, 9.732760e-003, -1.382416e-002, -7.639320e-003, -1.045685e-002, -8.286805e-003, 3.905317e-003, 6.488921e-003, -3.117684e-004, -1.456277e-002, -8.405956e-003, -6.806675e-003, -5.558244e-003, 1.763780e-002, 2.066507e-002, -1.706680e-003, -6.289214e-003, 2.133821e-003, 7.610303e-003, 3.949950e-003, -2.026305e-003, -4.831267e-003, -8.009042e-003, -5.020787e-003, -2.676136e-003, 4.751512e-003, 1.158564e-002, 1.435776e-002, 6.582266e-003, -8.704247e-003, -1.608328e-002, -1.600663e-002, -9.426895e-003, 4.169053e-003, -4.626451e-003, -1.319174e-002, -3.072096e-003, 1.084475e-003, -1.834849e-003, -1.072615e-002, -1.217845e-002, -1.078051e-002, -4.232491e-003, -4.860142e-003, 7.211841e-003, 1.448231e-003, 2.307230e-004, 7.187941e-003, -4.193049e-003, -7.507636e-003, -2.042320e-002, -2.688231e-002, -2.563923e-002, -2.394981e-002, -2.084599e-002, -2.171811e-002, -1.425016e-002, -1.280507e-002, -1.746167e-002, 8.186859e-004, 4.668578e-003, -9.685204e-004, -3.941625e-003, -3.544194e-003, 3.653858e-003, 6.263997e-003, 7.204868e-003, 9.020500e-003, 9.701041e-003, 1.418048e-002, 2.002218e-002, 2.858104e-002, 3.351541e-002, 3.208348e-002, 2.482068e-002, 1.366499e-002, 3.183630e-003, 1.158708e-003, 2.780495e-003, 3.821740e-003, -7.954916e-003, -7.125618e-003, -3.144865e-003, -3.347499e-003, -3.623174e-003, -5.187569e-003, -1.075574e-002, -8.799767e-003, 1.652482e-003, 9.469430e-003, 1.297936e-002, -1.877188e-003, 9.389473e-003, 1.060673e-002, 8.867363e-003, 1.440703e-003, -1.233591e-002, -1.973849e-003, 6.150501e-003, 8.845061e-003, 1.254196e-002, 1.415329e-002, 4.312213e-003, 4.125820e-003, 6.426015e-003, 4.985374e-003, -1.199572e-003, -1.656696e-003, 7.330159e-003, 7.622772e-003, 4.942319e-003, 2.462883e-003, 2.172754e-004, -4.020116e-003, -2.876582e-003, 7.968217e-004, 6.098240e-003, 1.252884e-002, 1.563351e-002, 1.746193e-002, 1.349244e-002, 7.534657e-003, 4.814156e-003, 5.574927e-003, 4.727230e-003, 1.661514e-003, -7.140591e-003, 1.364366e-003, 4.285855e-003, -8.537029e-004, 4.406308e-003, 1.039936e-002, 9.601337e-003, 2.928536e-003, 1.012206e-002, 2.120676e-002, 1.533557e-002, -2.197940e-002, -1.310263e-002, 3.391268e-003, -2.892663e-003, 7.077189e-004, -4.087126e-005, 3.486550e-003, 3.645119e-003, -7.874905e-004, -5.851426e-003, -9.085126e-003, -1.305872e-002, -6.941430e-003, -3.171516e-003, -8.037187e-003, -1.606743e-002, -1.770365e-002, -1.105439e-002, 1.947626e-003, 7.416817e-003, 5.163936e-003, -1.298966e-005, -6.808813e-003, -1.218304e-002, -1.392513e-002, -1.092993e-002, -4.396595e-003, 9.800903e-005, 4.488828e-003, 6.924523e-003, 6.162673e-003, 9.705952e-003, 1.090687e-002, 6.226513e-003, -1.650171e-003, -7.716938e-003, -1.863360e-003, -5.698717e-004, -2.850983e-003, -9.076762e-003, -4.161573e-003, 2.887313e-003, -7.669841e-003, -1.010201e-002, 7.478136e-003, 5.108289e-003, -1.924546e-002, -3.011837e-002, -3.075375e-002},
{-6.220569e-003, 5.197637e-003, 5.966581e-003, 1.335189e-002, 9.276908e-003, -3.213746e-004, -1.933197e-002, -3.374290e-002, -3.436752e-002, -2.631473e-002, 2.411637e-003, 1.742052e-002, 1.029805e-002, -4.157555e-003, -9.179729e-003, -3.769102e-003, -4.309340e-003, -3.511871e-003, -4.958759e-003, 1.936035e-004, 4.667635e-003, 1.053277e-002, 1.418928e-002, 1.457237e-002, 1.041965e-002, 3.435818e-003, -4.414738e-003, -4.017516e-003, -6.541771e-003, -3.282372e-003, 8.853642e-003, 1.301449e-002, 6.913037e-003, 4.101522e-003, 4.544909e-003, 3.922614e-003, 6.450303e-003, 3.088019e-003, -1.431444e-002, -2.500378e-002, -2.923747e-002, -3.159072e-002, -3.232137e-002, 9.897298e-004, 3.116009e-003, 6.088152e-003, -1.868584e-003, 5.752689e-003, 8.697544e-003, 1.119538e-002, 5.761013e-003, -4.971920e-003, -1.425397e-002, -1.649033e-002, -2.398772e-002, -1.050943e-002, 4.113456e-003, -3.113159e-003, -1.771831e-002, -1.884823e-002, -7.071122e-003, -6.123455e-003, -1.249990e-002, -1.600101e-002, -1.223585e-002, -7.780320e-003, -6.953757e-004, 5.705778e-003, 1.247878e-002, 1.436901e-002, 1.238681e-002, 3.647458e-003, -4.010699e-003, -1.178825e-002, -1.177279e-002, -8.433276e-003, 3.174142e-004, 6.195919e-003, 1.053805e-002, 2.726557e-003, -

© ISO/IEC 2004 — All rights reserved


Copyright International Organization for Standardization
Provided by IHS under license with ISO
No reproduction or networking permitted without license from IHS
Not for Resale

6.086981e-003, -1.329284e-002, -1.732429e-002, -5.124256e-003, -5.952727e-004, -2.381316e-004, 7.264495e-003, 8.314142e-003, 5.809540e-003, 3.366694e-003, 4.338579e-003, 1.250601e-002, -9.487589e-003, -3.336682e-003, 1.816284e-003, 1.115052e-002, 2.932828e-003, 4.556046e-004, 5.141569e-003, -6.444807e-003, -1.395259e-002, -8.593045e-003, -1.090092e-002, -1.627349e-002, 1.166739e-003, 1.208749e-002, 7.848763e-003, -4.845495e-003, -1.472196e-002, -1.707605e-002, -1.630016e-002, -1.044800e-002, -3.053693e-003, 6.470476e-003, 1.653589e-002, 1.783445e-002, 1.039832e-002, -4.052172e-003, -1.586605e-002, -2.333005e-002, -2.231999e-002, -1.699687e-002, -2.575256e-003, 8.660866e-003, 1.317753e-002, 7.469293e-003, -3.341743e-003, -7.529310e-003, -1.921431e-002, -2.702987e-002, -1.446612e-002, -4.524358e-003, 1.322542e-004, 4.698173e-003, -1.299921e-004, -7.406557e-003, -1.126278e-002, -7.722631e-004, -1.440152e-002, -1.008309e-002, 5.634819e-003, 1.070961e-002, 6.825669e-003, 1.720737e-002, 1.337009e-002, -7.293579e-003, -1.485749e-002, -2.076768e-002, -1.413386e-002, 1.171049e-002, 3.288542e-002, 2.827141e-002, 1.077731e-002, 8.395811e-004, -8.470357e-003, -8.081293e-003, -1.104041e-003, 9.401610e-003, 1.391514e-002, 2.114022e-002, 2.790103e-002, 3.495277e-002, 2.783444e-002, 1.670354e-002, 5.685912e-003, -6.965314e-003, -1.670579e-002, -1.467485e-002, -3.382109e-003, 9.167452e-003, 1.876358e-002, 1.646763e-002, 2.758517e-003, 1.188231e-003, 3.746143e-003, -1.322833e-002, -2.421306e-002, -8.846970e-003, -5.234961e-003, 9.441614e-003, 1.041863e-002, 4.900742e-004, -1.675816e-002, -1.328185e-002, -2.024674e-002, -5.251926e-003, 1.426495e-002, 1.972556e-002, 2.090004e-002, 3.615308e-002, 2.335781e-002, 2.859226e-003, -1.030870e-002, -1.171309e-002, 8.367627e-003, 2.719394e-002, 3.085021e-002, 1.321820e-002, 2.003489e-004, -7.168853e-003, -1.101474e-002, -2.923023e-003, 5.785456e-003, 8.753268e-003, 3.980481e-003, 1.237661e-003, -1.802910e-003, 2.012879e-003, -6.947115e-004, -2.181075e-003, 5.007225e-005, -2.499999e-003, -1.087591e-002, -1.908641e-002, -2.339991e-002, -1.751530e-002, -7.731846e-003, -1.332689e-003, -9.487155e-003, -1.641962e-002, -7.207579e-003, 8.511884e-003, -9.930948e-003, -9.435764e-003, -6.376875e-003, 1.485001e-003, 1.098754e-002, 1.312548e-002, -1.167731e-002, -1.619085e-002, -2.434873e-002, -2.264221e-003, 1.507024e-002, 1.691211e-002, 1.084685e-002, 1.764947e-002, 9.578400e-004, -6.106250e-003, -1.314140e-002, -1.473233e-002, -6.688536e-003, 2.261377e-004, -6.721594e-004, -1.032028e-002, -1.492742e-002, -1.318866e-002, -7.559299e-003, -2.201964e-004, 4.202648e-003, 2.263829e-003, -8.445678e-003, -2.245222e-002, -2.991207e-002, -3.135674e-002, -3.035733e-002, -2.416838e-002, -1.488761e-002, -5.884356e-003, 7.213023e-004, -3.588479e-003, -1.692857e-002, -2.471616e-002, -2.189662e-002, -1.271272e-002, -7.420016e-003, -1.993337e-002, -2.104584e-002, 3.928751e-003, 1.329634e-002, 3.215411e-003, 2.923178e-004, 3.830112e-003, 1.175024e-003, 1.245444e-002, -8.931872e-003, -2.061031e-002, -2.362604e-002, -5.889874e-004, 4.797882e-003, 7.351163e-003, 1.214478e-002, 1.556024e-002, 1.010101e-002, 7.298387e-003, -9.057729e-003, -1.636601e-002, -1.019193e-002, 6.289651e-004, -6.612773e-003, -1.286989e-002, -1.048031e-002, -3.464356e-003, 1.071300e-002, 2.412405e-002, 2.588212e-002, 1.660488e-002, 2.341559e-003, -2.179495e-002, -3.694440e-002, -4.350008e-002, -4.073796e-002, -2.938279e-002, -1.553251e-002, -4.706186e-003, 6.406707e-003, 1.349025e-002, 5.282007e-003, -7.060145e-003, -2.134562e-002, -2.148211e-002, -1.194587e-002, -9.358749e-003, -2.117505e-002, -1.049305e-002, 1.764274e-002, 1.562802e-002, 1.029286e-002, 1.217396e-002, 6.701266e-003, 1.120560e-002, 3.262855e-003, -1.403670e-002, -2.472137e-002, -3.747505e-003, -4.706403e-003, 8.219541e-004, 1.535383e-002, 2.097513e-002, 2.525916e-002, 1.781137e-002, -1.078373e-002, -1.051387e-002, 2.360778e-004, -1.517818e-003, -1.342950e-002, -1.617991e-002, -4.726657e-003, 1.483071e-002, 3.161791e-002, 4.655326e-002, 4.712796e-002, 3.085962e-002, 9.373795e-003, -2.425924e-002, -4.491702e-002, -5.321405e-002, -4.588449e-002, -3.363587e-002, -1.856556e-002, -6.057630e-003, 3.793297e-003, 1.167508e-002, 1.530221e-002, 5.700149e-003, -1.162865e-003, -1.265445e-002, -1.374725e-002, -5.196164e-003, -1.035754e-002, -1.299305e-002, 4.690596e-003, 1.624134e-002, 7.870391e-003, 1.934867e-002, 1.225345e-002, 4.188765e-003, 3.258155e-003, -5.642329e-003, -2.115894e-002, -7.847099e-003, -1.255810e-002, 8.327909e-004, 1.760042e-002, 2.410940e-002, 2.538663e-002, 1.527856e-002, -7.059448e-003, 1.753433e-003, 6.822358e-003, -7.971968e-003, -2.136584e-002, -1.812162e-002, -3.893039e-003, 1.943847e-002, 3.495474e-002, 4.272448e-002, 4.707973e-002, 3.535460e-002, 1.114418e-002, -2.106036e-002, -3.785698e-002, -4.226756e-002, -3.326525e-002, -2.212289e-002, -1.610718e-002, -6.644144e-003, -7.301592e-004, 3.299409e-003, 8.067237e-003, 3.568084e-003, 3.895756e-003, 1.239344e-003, -9.602906e-004, 1.655561e-003, 6.236289e-003, 2.778374e-004, 4.130593e-003, 1.896801e-002, 8.448323e-003, 1.174637e-002, 2.071979e-002, 5.667812e-003, 2.912425e-003, -2.367584e-003, -1.382947e-002, -1.116615e-002, -2.115122e-002, 6.637867e-003, 1.518083e-002, 1.146004e-002, 1.702920e-002, 9.884581e-003, 4.404060e-003, 3.015172e-003, 1.994754e-003, -1.377643e-002, -2.282733e-002, -2.198289e-002, -1.838183e-002, -1.694744e-003, 1.504887e-002, 2.948008e-002, 4.142760e-002, 3.804109e-002, 2.042951e-002, -3.986510e-003, -1.567999e-002, -1.152202e-002, 2.359533e-003, 9.964015e-003, 1.053154e-002, 7.714191e-003, 7.309973e-003, 3.490114e-003, -2.274830e-003, -5.441386e-003, -8.352124e-004, 4.256675e-003, 5.351701e-003, 7.759924e-003, 1.859698e-002, 1.173926e-002, 7.763373e-003, 1.700700e-002, 1.104557e-002, 6.464886e-003, 2.236859e-002, 1.240572e-002, -6.035977e-003, 5.286228e-004, -7.488872e-003, -2.522087e-002, -1.621099e-002, 1.583152e-002, -


© ISO/IEC 2004 — All rights reserved

Copyright International Organization for Standardization
Provided by IHS under license with ISO
No reproduction or networking permitted without license from IHS
Not for Resale

3.281105e-004, -7.834540e-003, 1.138624e-002, 1.563825e-002, 1.112522e-002, 9.532112e-004, -3.253908e-003, -1.743191e-002, -2.564437e-002, -3.151475e-002, -3.376896e-002, -3.050000e-002, -1.182941e-002, 1.210218e-002, 3.251045e-002, 3.528806e-002, 2.204660e-002, 1.173646e-002, 1.060195e-002, 2.457073e-002, 3.854521e-002, 4.139127e-002, 3.887314e-002, 3.008866e-002, 2.093956e-002, 1.169791e-002, 2.069169e-003, -8.029071e-003, -8.670364e-003, 3.474134e-003, 4.801081e-003, 1.175099e-002, 2.129135e-002, 1.998959e-002, 3.800347e-003, 1.381762e-002, 1.300514e-002, 2.464610e-003, 1.191149e-002, 1.026255e-002, -8.155706e-003, 5.093302e-003, -3.920950e-003, -2.613272e-002, -4.262545e-003, 1.403400e-002, -1.383263e-002, -1.962842e-002, 1.274661e-002, 2.048710e-002, 6.769850e-003, -7.903039e-004, -1.815087e-003, -1.513071e-002, -2.251149e-002, -3.758647e-002, -5.087649e-002, -5.220412e-002, -3.019354e-002, -6.268319e-003, 9.711529e-003, 1.673182e-002, 1.449059e-002, 1.527609e-002, 2.043487e-002, 3.809022e-002, 5.029647e-002, 5.727740e-002, 5.246073e-002, 3.930293e-002, 2.698869e-002, 1.242609e-002, 1.366418e-004, -8.383477e-003, -1.060413e-002, 6.015569e-003, 1.532366e-002, 1.572330e-002, 2.015097e-002, 2.505964e-002, 8.996854e-003, 1.117056e-002, 9.234086e-003, -9.438987e-003, 4.196198e-003, 9.243081e-003, -1.061732e-002, 6.204448e-003, 5.361392e-004, -2.203309e-002, 7.153142e-003, -7.575466e-003, -2.542934e-002, -2.340171e-002, 9.603754e-003, 1.414047e-002, 3.639971e-003, 6.656911e-003, 8.684849e-003, 8.937472e-004, -1.656887e-002, -4.268444e-002, -5.923942e-002, -6.140747e-002, -4.777727e-002, -3.213090e-002, -1.507469e-002, -5.586547e-003, -6.272480e-003, 4.153463e-003, 1.441651e-002, 2.787528e-002, 4.269321e-002, 5.066545e-002, 4.772662e-002, 3.634401e-002, 2.007681e-002, 3.543730e-003, -2.541103e-003, -2.858338e-003, -4.413289e-003, 8.451246e-003, 2.502362e-002, 2.595409e-002, 1.786001e-002, 2.266718e-002, 1.722154e-002, 5.122392e-003, 5.796006e-003, -7.051939e-003, -9.919011e-003, -3.218015e-003, -9.374426e-003, 5.989773e-003, 2.324536e-003, -1.664625e-002, 9.734993e-003, -4.302977e-003, -1.970816e-002, -1.383311e-002, 5.220208e-003, 1.366153e-002, 1.110793e-002, 2.148838e-002, 2.976226e-002, 1.936938e-002, -7.018478e-003, -3.717574e-002, -5.260272e-002, -5.481551e-002, -5.248545e-002, -4.405980e-002, -3.307923e-002, -2.690088e-002, -2.604543e-002, -1.864226e-002, -1.171106e-002, -9.697919e-004, 1.197195e-002, 2.344799e-002, 2.234256e-002, 1.966230e-002, 9.924441e-003, -5.201005e-003, -8.539248e-003, -4.956546e-003, -6.212894e-003, 6.834353e-003, 2.859138e-002, 3.281251e-002, 1.735262e-002, 1.459056e-002, 2.148138e-002, 1.600322e-003, 9.946005e-004, -9.780690e-004, -2.190631e-002, -1.365031e-002, -6.735375e-003, 4.905293e-003, 3.760451e-003, -1.591003e-002, 9.860369e-003, -6.966939e-003, -1.319646e-002, -5.092415e-003, 7.021735e-003, 1.432296e-002, 1.826350e-002, 3.403926e-002, 5.065306e-002, 3.905437e-002, 8.805573e-003, -1.972340e-002, -3.426981e-002, -3.352239e-002, -3.655045e-002, -3.474646e-002, -2.963527e-002, -3.018218e-002, -3.029563e-002, -2.878526e-002, -2.524978e-002, -2.160054e-002, -1.367356e-002, -6.987470e-003, -4.975178e-003, -1.028514e-002, -1.177187e-002, -1.536806e-002, -1.711540e-002, -1.364348e-002, -7.020340e-003, 7.733692e-003, 2.672436e-002, 3.749090e-002, 1.730565e-002, 2.516670e-003, 1.781086e-002, -5.685673e-004, 3.434379e-004, -9.912308e-004, -2.266296e-002, -3.494654e-002, -8.328888e-003, -6.094697e-004, 6.246903e-003, -1.496069e-002, 7.547072e-003, -1.038872e-002, -1.807246e-003, 1.734868e-003, 3.565661e-003, 1.300932e-002, 2.003565e-002, 3.725407e-002, 5.781947e-002, 6.033755e-002, 3.566749e-002, 9.432179e-003, -2.366247e-003, -3.064179e-003, -5.646837e-003, -4.606340e-003, -5.559265e-003, -1.028900e-002, -1.666588e-002, -2.078445e-002, -2.132780e-002, -2.385555e-002, -2.413862e-002, -2.054442e-002, -2.498987e-002, -3.087855e-002, -3.050997e-002, -2.851703e-002, -2.510182e-002, -1.743177e-002, -1.148598e-002, -1.419237e-003, 1.806977e-002, 3.802865e-002, 1.791123e-002, -7.702064e-003, 9.538813e-003, -4.928367e-003, -6.852303e-003, -2.605732e-003, -1.835416e-002, -4.059787e-002, -1.208699e-002, -2.943009e-003, 1.166218e-002, -7.304286e-003, 1.491923e-002, -1.409142e-002, 4.364588e-003, 3.051419e-003, -1.738021e-003, 1.105389e-002, 1.820807e-002, 2.950880e-002, 4.861827e-002, 6.730393e-002, 5.233534e-002, 3.830760e-002, 3.285834e-002, 3.576103e-002, 3.877704e-002, 3.687255e-002, 2.437163e-002, 1.057906e-002, 1.665802e-003, -8.513082e-003, -1.650696e-002, -1.961899e-002, -2.312602e-002, -2.395718e-002, -2.973825e-002, -3.620593e-002, -3.759532e-002, -3.552094e-002, -3.006091e-002, -2.437644e-002, -2.053417e-002, -1.895657e-002, -9.522401e-003, 1.588156e-002, 1.016441e-002, -1.499913e-002, 1.066800e-003, -8.694837e-003, -1.097711e-002, 8.073935e-004, -8.480831e-003, -3.422136e-002, -1.818974e-002, -6.780931e-003, 1.796474e-002, 3.119057e-003, 2.118676e-002, -8.355567e-003, 9.948306e-003, 3.346685e-003, -5.907305e-003, 6.661310e-003, 1.500280e-002, 7.680275e-003, 2.844774e-002, 5.634094e-002, 4.598995e-002, 3.717020e-002, 3.744482e-002, 4.266925e-002, 4.377415e-002, 4.568614e-002, 3.488742e-002, 1.970852e-002, 8.374485e-003, -3.624420e-003, -6.184983e-003, -6.021542e-003, -1.225716e-002, -1.420610e-002, -2.403658e-002, -3.617720e-002, -4.959445e-002, -5.535428e-002, -4.840732e-002, -3.724406e-002, -3.171590e-002, -3.276654e-002, -3.277174e-002, -1.630818e-002, -6.680465e-003, -2.027639e-002, -8.957185e-003, -1.117496e-002, -1.064821e-002, 3.754390e-003, -5.310688e-004, -2.220751e-002, -1.483262e-002, -9.619336e-003, 1.725298e-002, 1.136026e-002, 2.954016e-002, 2.737315e-003, 1.862194e-002, 7.371506e-003, -7.584661e-003, 4.305050e-003, 8.913357e-004, -2.637797e-002, -1.028058e-002, 2.399077e-002, 2.458832e-002, 2.375807e-002, 1.877611e-002, 8.517043e-003, -4.577844e-003, -1.938655e-003, 7.508788e-003, 9.442296e-003,

© ISO/IEC 2004 — All rights reserved


--`,,```,,,,````-`-`,,`,,`,`,,`---

Copyright International Organization for Standardization
Provided by IHS under license with ISO
No reproduction or networking permitted without license from IHS
Not for Resale

1.251731e-002, 1.806362e-002, 2.108416e-002, 2.712850e-002, 2.658922e-002, 2.528736e-002, 5.703838e-003, -1.324456e-002, -3.017208e-002, -3.656471e-002, -2.814423e-002, -1.499323e-002, -1.386593e-002, -2.060090e-002, -2.788564e-002, -2.836782e-002, -2.662539e-002, -2.562396e-002, -1.468425e-002, -1.530868e-002, -1.067543e-002, 1.881244e-003, 1.094316e-002, -6.388964e-003, -2.123878e-003, -3.542107e-003, 1.867234e-002, 1.545668e-002, 3.682022e-002, 1.519924e-002, 1.360596e-002, -1.683893e-003, -2.051493e-002, -7.371550e-003, -2.518834e-002, -6.142151e-002, -3.400847e-002, 2.979932e-002, 5.272193e-002, 5.658481e-002, 5.180037e-002, 3.905997e-002, 2.357567e-002, 8.461346e-003, 5.659497e-004, 2.845998e-003, 2.003618e-002, 4.263732e-002, 5.310407e-002, 5.931415e-002, 6.492030e-002, 7.008367e-002, 4.340674e-002, 3.029450e-002, 2.756770e-002, 2.372766e-002, 2.280171e-002, 1.443556e-002, 5.911377e-003, 7.709036e-004, 2.876182e-003, -4.997268e-003, -2.302410e-002, -3.173271e-002, -1.493688e-002, -1.393225e-002, -1.134648e-002, -2.889585e-003, 1.576678e-002, 8.667182e-003, 1.095396e-002, 6.391596e-003, 1.104645e-002, 1.597401e-002, 2.537874e-002, 1.582656e-002, -4.024955e-003, -1.296466e-002, -3.204527e-002, -1.894215e-002, -4.876869e-002, -7.223667e-002, -2.208308e-002, 2.976608e-002, 2.398007e-002, 2.103084e-002, 3.199603e-002, 4.339602e-002, 4.654555e-002, 2.679484e-002, -8.957436e-004, -1.747521e-002, -7.684942e-003, 1.863031e-002, 3.822634e-002, 4.519923e-002, 4.797307e-002, 4.578991e-002, 2.180038e-002, 2.075853e-002, 3.104890e-002, 3.105034e-002, 2.574933e-002, 2.508848e-003, -1.933470e-002, -3.271752e-002, -2.511682e-002, -1.020667e-002, -8.206351e-003, -1.664236e-002, -1.089799e-002, -3.060718e-003, -9.816777e-003, -5.449144e-003, 1.347758e-002, 1.053507e-002, 2.173501e-002, 1.396039e-002, -1.114559e-002, 8.339230e-003, 1.634178e-002, 1.285914e-002, -9.608395e-003, -1.613821e-002, -3.902749e-002, -3.507348e-002, -5.633834e-002, -5.394820e-002, -1.137608e-002, -7.271781e-003, -2.581639e-002, -2.258796e-002, 2.135094e-004, 2.736046e-002, 4.511025e-002, 4.051320e-002, 5.224435e-003, -3.239059e-002, -3.481620e-002, -1.530992e-002, 7.187034e-003, 8.568739e-003, -5.261850e-003, -1.945924e-003, -1.598019e-004, 1.465868e-002, 4.642820e-002, 7.992703e-002, 9.224774e-002, 6.894163e-002, 2.514762e-002, -1.581734e-002, -3.990201e-002, -2.915456e-002, -1.034067e-003, 8.411013e-003, 2.127593e-003, 1.313823e-002, 5.716991e-004, 2.282470e-003, 9.846768e-003, 8.045447e-003, 2.878765e-002, 1.677229e-002, -1.504744e-002, -1.692661e-003, 7.685609e-004, -6.892953e-003, -4.678132e-003, 1.522134e-003, -1.240721e-002, -1.247316e-002, -2.914738e-002, -1.357941e-002, -1.910850e-002, -6.500475e-002, -8.531865e-002, -7.038591e-002, -5.212829e-002, -3.524911e-002, -1.871670e-002, -1.333396e-002, -2.080423e-002, -2.886464e-002, -2.959702e-002, -3.218909e-002, -1.423266e-002, -1.245037e-002, -3.643784e-002, -2.235434e-002, 3.288723e-003, 5.873340e-003, 1.188585e-002, 3.420597e-002, 3.520169e-002, 1.117790e-002, -1.176493e-002, -3.392077e-002, -6.180624e-002, -4.485206e-002, 3.230918e-003, 1.850244e-002, 5.643875e-003, 2.136760e-002, 7.848966e-003, 5.467335e-003, 6.630139e-003, 7.887139e-003, 1.295560e-002, 1.951766e-002, -9.318699e-003, -6.991914e-003, -1.001564e-002, -2.369719e-002, -1.190808e-002, 8.055800e-003, -3.718193e-003, 2.206143e-002, 1.445822e-002, 1.344136e-002, -2.107661e-002, -7.882711e-002, -7.461061e-002, -2.525816e-002, -4.284906e-003, -2.833869e-004, -5.984415e-003, -5.291989e-002, -4.735475e-002, -2.735408e-003, -1.075158e-003, -2.587169e-002, -1.408623e-002, -1.530019e-002, -3.796649e-002, -1.570870e-002, 2.267919e-002, -6.187262e-003, -2.041384e-002, 1.216919e-003, 2.881060e-002, 6.619075e-003, -2.937081e-002, -3.674497e-002, -5.450515e-002, -4.647000e-002, 1.131681e-003, 1.995565e-002, 6.703457e-003, 2.355487e-002, 1.373030e-003, 6.693305e-003, 1.339584e-002, 1.596868e-002, 5.680458e-003, 2.157411e-002, 6.650906e-003, -6.315196e-003, -1.509078e-002, -3.067125e-002, -1.767371e-002, 6.517781e-003, -3.726788e-003, 3.105167e-002, 4.000128e-002, 4.462870e-002, 1.356300e-002, -1.071440e-002, 1.962895e-002, 1.018135e-002, -2.658749e-002, -3.303556e-002, -4.775816e-002, -7.973670e-002, -2.868359e-002, 2.659315e-002, 2.371693e-002, -6.696976e-003, 1.199614e-002, 1.441965e-002, -1.707078e-002, -1.908537e-002, 3.832608e-002, 2.488907e-002, -1.932254e-002, -4.023001e-002, -4.961401e-003, -1.833698e-003, -2.537641e-002, 1.899674e-002, 1.982168e-002, -6.956640e-003, 1.880754e-002, 3.115352e-002, 3.384732e-003, 1.974531e-002, 2.450801e-003, 4.807805e-003, 1.959422e-002, 1.721124e-002, -2.234432e-003, 1.763917e-002, 8.692521e-003, -6.496555e-003, -1.509275e-002, -2.261594e-002, -2.261511e-002, 9.033708e-003, -9.046126e-003, 2.066497e-002, 2.362938e-002, 2.948876e-002, 2.921164e-002, 3.236646e-002, 4.380491e-002, 1.927657e-002, -2.659886e-002, -4.264403e-002, -4.360160e-002, -2.354805e-002, 2.554445e-002, 4.577681e-002, 2.111954e-002, 9.091649e-003, 2.568221e-002, 2.545085e-002, -2.800243e-003, -2.302441e-002, 2.803378e-002, 3.816352e-002, 1.624709e-002, -1.761147e-002, -2.910093e-002, -2.318206e-002, -7.737773e-005, 4.087148e-002, 4.725249e-002, 1.854191e-002, 1.025168e-002, 1.546053e-002, -4.879726e-003, 1.392344e-002, 2.822549e-003, -1.533454e-003, 1.598352e-002, 1.561081e-002, -3.669466e-003, 8.304797e-003, 1.742919e-002, -8.622430e-003, -6.545597e-003, -1.160452e-002, -2.010025e-002, 3.767583e-003, -1.492442e-002, -1.817524e-003, -3.839870e-003, 7.096503e-003, 1.551979e-002, 2.379824e-002, 2.993310e-002, 1.349056e-002, -1.113630e-002, -1.957987e-002, -1.161472e-002, 1.006673e-002, 4.234285e-002, 3.745212e-002, 5.841516e-003, 1.339759e-002, 3.006454e-002, 2.470939e-002, 6.614363e-003, -9.754855e-003, 4.956768e-003, 3.193523e-002, 2.496267e-002, 4.526111e-003, -4.401505e-003, -1.127645e-003, 1.356415e-002, 3.565843e-002, 3.403979e-002, 7.343855e-003, -


© ISO/IEC 2004 — All rights reserved

Copyright International Organization for Standardization
Provided by IHS under license with ISO
No reproduction or networking permitted without license from IHS
Not for Resale

1.308912e-002, -9.859365e-003, -1.325241e-002, 1.104764e-002, -4.121500e-003, -1.858238e-002, -1.726136e-003, 1.215360e-002, -6.767577e-003, -1.033188e-003, 1.920781e-002, -7.472396e-003, 2.979751e-003, 4.525435e-003, -1.590008e-002, 4.884980e-003, -9.805882e-003, -1.523114e-002, -1.691164e-002, -1.642956e-002, -5.882929e-003, 5.079106e-003, 1.340627e-002, -2.618818e-004, -1.980183e-002, -2.381313e-002, -1.182401e-002, 1.039598e-002, 1.858837e-002, -1.104254e-003, -2.775177e-003, 1.282898e-002, 2.876911e-002, 1.717365e-002, -1.383883e-003, -2.953467e-004, -2.030139e-002, -2.191292e-003, 7.459793e-003, -1.059062e-003, -1.041443e-002, -1.483943e-002, -6.511056e-003, 1.548880e-002, 1.541063e-002, -9.660156e-003, -3.044433e-002, -2.525330e-002, -1.360796e-002, 8.413402e-003, -1.313142e-002, -2.774176e-002, -1.731125e-002, 8.397058e-003, -5.799282e-003, -6.970244e-003, 1.673735e-002, -1.465795e-002, 1.087371e-002, 2.150195e-002, -1.527258e-002, 1.211700e-002, -6.118449e-003, -1.671415e-002, -1.794212e-002, -2.768295e-002, -2.173415e-002, -1.151282e-002, -1.166247e-002, -2.059694e-002, -3.003128e-002, -2.836504e-002, -1.821542e-002, -1.148595e-002, -1.695598e-002, -1.706373e-002, -3.732875e-003, 1.126484e-002, 2.302562e-002, 1.345092e-002, -1.857635e-003, 4.347582e-003, -1.984371e-002, -3.531044e-002, -2.346576e-002, -9.301679e-003, -1.459812e-002, -2.387478e-002, -1.857846e-002, -1.080260e-002, -7.255822e-003, -2.443930e-002, -3.356770e-002, -2.659496e-002, -1.201225e-002, 1.102143e-002, -9.295554e-003, -3.079591e-002, -3.434249e-002, 6.260844e-003, -2.844389e-003, 2.374705e-002, 1.716276e-002, -3.632776e-002, 4.950578e-003, 3.172013e-002, -6.547714e-003, 1.995730e-002, -2.770059e-003, -1.305145e-002, -1.145059e-002, -2.205221e-002, -2.995111e-002, -2.669595e-002, -2.985949e-002, -4.008562e-002, -3.968140e-002, -3.430890e-002, -3.086408e-002, -3.287991e-002, -2.693927e-002, -9.494645e-003, 2.532059e-003, 2.292484e-002, 3.535737e-002, 2.401201e-002, 9.892480e-003, 9.236759e-003, 3.204019e-003, -2.856502e-002, -4.405724e-002, -3.579079e-002, -3.082696e-002, -3.334119e-002, -3.405705e-002, -3.098197e-002, -2.338824e-002, -2.759204e-002, -3.319746e-002, -2.197611e-002, -1.532794e-003, 1.271444e-002, 1.759843e-004, -1.247121e-002, -2.988750e-002, 3.567293e-003, -4.152730e-003, 2.474809e-002, 1.580937e-002, -3.118392e-002, -5.026006e-003, 2.964669e-002, -8.607950e-004, 1.453170e-002, 2.831794e-003, -9.264060e-003, 5.668982e-003, -4.620015e-003, -2.286667e-002, -2.788125e-002, -3.749851e-002, -4.921504e-002, -5.189965e-002, -4.660972e-002, -3.875008e-002, -2.872049e-002, -7.758109e-003, 1.279583e-002, 1.596058e-002, 3.733885e-002, 5.942711e-002, 4.650264e-002, 2.533003e-002, 2.303443e-002, 2.923119e-002, 1.160899e-002, -1.663018e-002, -3.620896e-002, -3.839326e-002, -4.217027e-002, -4.144688e-002, -3.492932e-002, -2.026017e-002, -1.930859e-002, -1.930163e-002, -1.072625e-002, 5.598276e-003, 1.198560e-002, 3.279542e-003, -4.015302e-003, -1.809335e-002, 3.585225e-003, -7.494936e-003, 7.852914e-003, 1.672434e-002, -2.065951e-002, -8.843130e-003, 1.662898e-002, -1.156131e-002, 2.619482e-003, 4.754626e-003, -7.187513e-003, 1.244465e-002, 1.941981e-002, -2.941481e-003, -1.353491e-002, -2.009122e-002, -2.991929e-002, -3.196852e-002, -2.725268e-002, -1.406641e-002, -8.161588e-004, 1.587809e-002, 8.206230e-003, -2.970807e-003, 2.967517e-002, 5.483601e-002, 3.805287e-002, 1.722648e-002, 2.819928e-002, 5.423323e-002, 4.065854e-002, 1.362206e-002, -3.914512e-004, -8.345027e-003, -1.625555e-002, -1.667803e-002, -9.755880e-003, 6.460093e-004, -2.024912e-003, -6.064035e-003, 1.778602e-003, 5.821049e-003, 1.953985e-003, 5.494562e-003, -1.162217e-003, -2.374648e-003, 4.072808e-003, -8.713463e-003, 7.561218e-003, 2.083776e-002, -1.216187e-002, -1.325331e-002, 2.823578e-003, -2.626658e-002, -1.712306e-002, -2.718751e-003, -1.204034e-002, 6.973172e-003, 2.977113e-002, 1.479969e-002, 5.088640e-003, 1.359019e-003, -4.552105e-003, -8.822927e-003, -4.505020e-003, 1.043906e-002, 2.823434e-002, 3.417328e-002, -9.390019e-003, -3.337507e-002, 2.053362e-002, 2.725508e-002, -4.926460e-003, -2.747068e-002, -1.279120e-002, 4.069677e-002, 4.893390e-002, 2.858079e-002, 1.695283e-002, 2.173475e-002, 1.869035e-002, 1.665351e-002, 2.221775e-002, 2.123686e-002, 9.349565e-003, 1.369177e-003, 5.857247e-003, -2.370354e-003, -1.697419e-002, 1.180677e-002, 7.322651e-003, -2.285963e-003, 1.336671e-003, -9.196446e-003, 4.319284e-003, 1.999142e-002, -5.591523e-003, -9.387085e-003, -8.678620e-003, -3.260874e-002, -1.808266e-002, -4.679675e-003, -1.521095e-002, 3.724855e-005, 3.219484e-002, 2.083868e-002, 8.929561e-003, 6.101819e-003, -9.641063e-004, -5.623801e-003, -1.231349e-004, 1.410403e-002, 4.102095e-002, 4.906139e-002, 7.980614e-003, -2.032514e-002, 1.562618e-003, -1.916202e-002, -3.945317e-002, -3.379032e-002, -1.483812e-002, 1.654731e-002, 4.973333e-002, 3.836654e-002, 1.346646e-002, 1.568394e-002, 1.687584e-002, 1.729591e-002, 2.382989e-002, 2.186606e-002, 8.088841e-003, 4.778639e-004, 3.033771e-003, -1.316004e-002, -2.982664e-002, 1.383429e-002, 8.016927e-003, -8.115665e-003, -3.019745e-003, -6.300631e-003, 5.745053e-003, 2.461932e-002, 2.564982e-003, 3.913744e-003, -3.048942e-003, -2.363196e-002, -7.730288e-003, 1.957605e-003, -1.561558e-002, -2.692176e-003, 2.421001e-002, 2.360458e-002, 6.821433e-003, -9.168148e-004, -8.511360e-003, -1.178436e-002, -8.555587e-003, 1.163613e-002, 4.061632e-002, 4.883482e-002, 3.733525e-002, 1.770254e-002, -2.308916e-002, -5.142874e-002, -3.937128e-002, -8.019150e-003, 1.866326e-002, 2.818490e-002, 5.231212e-002, 4.569778e-002, 1.443086e-002, 2.538995e-003, 3.759111e-003, 6.020250e-003, 1.750748e-002, 1.564272e-002, 6.348898e-003, 7.076403e-004, 2.111808e-004, -1.732552e-002, -1.582629e-002, 2.576411e-002, 9.034722e-003, -1.137925e-002, 4.270031e-004, -5.663992e-003, 5.891013e-003, 2.995913e-002, 1.021571e-002, 1.338115e-002, 1.203558e-002, -6.817051e-003, 4.898823e-003,

© ISO/IEC 2004 — All rights reserved


Copyright International Organization for Standardization
Provided by IHS under license with ISO
No reproduction or networking permitted without license from IHS
Not for Resale

2.282098e-002, -4.141665e-003, -1.003833e-002, 1.241353e-002, 2.339697e-002, 4.319424e-003, -1.182238e-002, -1.646266e-002, -1.918781e-002, -1.263646e-002, 1.250864e-002, 2.793077e-002, 3.073930e-002, 2.423496e-002, -4.092725e-003, -4.876415e-002, -6.997084e-002, -5.753146e-002, -3.842634e-002, -8.510876e-003, 8.455072e-003, 1.972732e-002, 2.056521e-002, 1.060022e-002, -4.625754e-003, -7.103899e-003, 8.692237e-004, 1.234508e-002, 1.026722e-002, 4.177533e-003, 3.679553e-003, -1.035214e-003, -1.332309e-002, -9.840954e-004, 3.735171e-002, 7.914760e-003, -8.465460e-003, 1.149094e-002, 2.815836e-003, 1.033702e-002, 2.758142e-002, 7.889777e-003, 8.383779e-003, 1.620874e-002, 9.408400e-003, 1.369074e-002, 2.956619e-002, 5.288003e-003, -1.241354e-002, 9.864388e-004, 1.998866e-002, 2.996543e-003, -1.894632e-002, -2.120861e-002, -2.120829e-002, -9.265068e-003, 6.440366e-003, 8.682311e-003, 5.961186e-003, -3.520471e-003, -3.187702e-002, -6.051923e-002, -6.815835e-002, -6.511102e-002, -5.128637e-002, -2.590450e-002, -1.056577e-002, -1.239053e-002, -1.759778e-002, -1.106383e-002, -1.545056e-002, -1.713370e-002, 1.232623e-003, 1.381470e-002, 3.957135e-003, 1.800054e-004, 5.707335e-003, 1.849056e-003, -1.073632e-002, 9.215155e-003, 3.038575e-002, -8.571004e-003, -8.793975e-003, 1.586187e-002, 3.494320e-003, 7.922855e-003, 1.350498e-002, -1.090138e-002, -8.043547e-004, 1.475692e-002, 1.435883e-002, 9.550576e-003, 2.229947e-002, 3.372564e-003, -1.328729e-002, -1.077655e-002, 9.974416e-003, 2.521470e-003, -1.786691e-002, -1.430816e-002, -6.784171e-003, 9.185621e-003, 1.211847e-002, 1.262486e-002, 9.379087e-004, -1.704009e-002, -4.124479e-002, -5.201809e-002, -4.327980e-002, -4.497335e-002, -3.802577e-002, -1.490578e-002, -7.836852e-003, -1.900221e-002, -2.868037e-002, -2.155610e-002, -1.899085e-002, -1.749008e-002, 1.363422e-003, 1.397646e-002, -5.899324e-004, -4.192387e-004, 9.327002e-003, 9.347198e-003, -8.350000e-003, 2.868295e-003, 9.356414e-004, -2.266691e-002, -8.086857e-003, 6.266893e-003, -6.113218e-003, -8.780852e-004, -1.758457e-002, -8.244567e-003, -1.272057e-003, 1.230548e-002, 1.378844e-002, 6.621282e-003, 8.637745e-003, 2.169625e-003, -1.780762e-006, -9.380127e-003, 1.014211e-004, 1.262900e-003, -1.035212e-002, -3.334175e-003, 1.356263e-002, 3.257520e-002, 2.884349e-002, 1.498441e-002, -9.505240e-003, -2.265719e-002, -2.058929e-002, -1.616794e-002, -4.457788e-003, -6.239617e-003, -9.162833e-003, -2.346833e-003, -4.343181e-003, -9.291289e-003, -1.974568e-002, -1.613278e-002, -1.092705e-002, -5.597316e-003, 8.757271e-003, 1.368944e-002, -1.305959e-003, -2.524329e-003, 7.694010e-003, 1.627244e-002, -9.279968e-003, -1.334139e-002, -2.275236e-002, -2.511278e-002, -1.314428e-002, -3.598391e-003, -1.322080e-002, -3.344180e-003, -1.689948e-002, -9.263766e-003, -1.390395e-003, 7.261233e-003, 1.250173e-002, 4.811335e-003, 8.674038e-004, -2.347378e-005, 2.339843e-002, 5.646288e-003, -4.858662e-003, -2.595927e-003, -5.166953e-003, 3.491938e-003, 2.397457e-002, 3.642502e-002, 1.810045e-002, -9.156984e-003, -2.952810e-002, -3.012489e-002, -2.206079e-002, -1.682761e-002, -3.616358e-003, 6.618511e-004, -1.113491e-003, 1.781669e-003, -1.638792e-002, -2.698260e-002, -3.552599e-002, -3.857264e-002, -1.496438e-002, 7.556157e-003, 1.549387e-002, 7.828213e-003, -5.093124e-003, -5.975935e-003, 8.271129e-003, 1.959759e-002, -5.430996e-003, -1.394277e-002, -2.591173e-002, -1.435481e-002, -6.300679e-003, -8.924773e-003, 2.435089e-003, -6.066305e-003, -1.209086e-002, -2.777425e-003, -3.928330e-003, -2.686300e-003, -2.679463e-003, -3.686452e-003, 6.871802e-003, 1.295511e-002, 3.429319e-002, 2.322624e-002, -5.146467e-003, -9.837517e-003, -2.685520e-003, 8.120067e-003, 2.387219e-002, 2.968682e-002, 2.169275e-002, -3.551917e-003, -2.443528e-002, -3.301973e-002, -3.532629e-002, -3.281924e-002, -2.117593e-002, -8.156407e-003, -5.749729e-004, 1.137797e-002, 5.531610e-003, -7.033162e-003, -1.360060e-002, -1.211477e-002, -1.278399e-004, 2.600826e-002, 2.557503e-002, 7.091749e-003, -8.132356e-003, -4.345482e-003, 1.378181e-002, 1.001702e-002, -2.319954e-003, -1.976070e-002, -2.019813e-002, 4.802439e-003, 6.690632e-003, -1.117799e-002, -5.184894e-003, -6.217924e-003, -4.595626e-003, 5.735120e-003, 1.442912e-003, -3.182671e-003, -1.260076e-002, -9.719625e-003, 8.817854e-003, 2.078402e-002, 3.524743e-002, 3.456838e-002, 1.198340e-003, -1.530472e-002, -7.131915e-003, 6.305120e-003, 1.783815e-002, 2.322634e-002, 2.146350e-002, 1.017800e-002, -5.232680e-003, -2.095865e-002, -2.957690e-002, -3.446718e-002, -2.576315e-002, -1.157924e-002, -2.380428e-003, 1.354274e-002, 2.463344e-002, 2.661386e-002, 2.796478e-002, 2.683812e-002, 2.736734e-002, 3.968969e-002, 2.989233e-002, 3.803661e-003, -1.065566e-002, -1.926187e-003, 8.709920e-003, 4.860448e-003, -1.881908e-003, -1.542811e-002, 2.443225e-003, 1.841663e-002, 1.861534e-002, -9.719305e-004, -5.198164e-003, -3.826595e-003, 5.794563e-003, 1.456338e-002, 6.286608e-003, -6.415136e-004, -1.322524e-002, -1.121809e-002, 8.636624e-003, 2.006635e-002, 2.182425e-002, 3.366948e-002, 1.061735e-002, -1.163143e-002, -9.838035e-003, 3.364701e-003, 8.190132e-003, 9.831779e-003, 1.562622e-002, 1.843642e-002, 2.136175e-002, 1.467237e-002, 5.465589e-004, -1.013854e-002, -1.133980e-002, -7.213216e-003, -1.944675e-003, 2.172902e-003, 4.189536e-003, 6.236992e-003, 1.071586e-002, 1.981462e-002, 3.151266e-002, 3.938881e-002, 3.024943e-002, 1.164468e-003, -6.170183e-003, 4.817657e-003, -1.562533e-003, -2.380375e-003, -4.607323e-003, -1.336539e-002, 1.130582e-002, 1.756482e-002, 1.764066e-002, 4.899944e-003, 1.329453e-003, 2.220923e-003, 1.612452e-002, 1.452692e-002, -7.208307e-004, -4.377622e-003, -7.925722e-003, -9.592726e-003, 7.649110e-003, 1.244682e-002, -2.154826e-003, 1.644162e-002, 1.563107e-002, -4.163513e-003, -7.476801e-003, 2.693093e-003, 5.558039e-003, 6.103947e-003, 8.319635e-003, 1.243887e-002, 2.165643e-002, 2.664292e-002, 2.745844e-002, 2.750314e-002,


© ISO/IEC 2004 — All rights reserved

Copyright International Organization for Standardization
Provided by IHS under license with ISO
No reproduction or networking permitted without license from IHS
Not for Resale

2.709732e-002, 2.388685e-002, 1.745635e-002, 8.247099e-003, -1.510551e-003, -1.121228e-002, -9.954380e-003, 5.124793e-003, 2.384750e-002, 3.104519e-002, 1.815441e-002, -5.680183e-004, 4.551789e-003, 1.065463e-002, -1.038048e-002, -2.259476e-003, -8.270931e-003, -7.409323e-003, -3.801637e-003, 2.410829e-003, 7.744123e-003, -6.301272e-003, 9.685959e-004, 6.594056e-003, 1.066346e-002, 6.958183e-003, -7.947585e-003, -1.037798e-002, -8.131938e-003, -1.096438e-002, 2.381267e-003, 7.745241e-003, -1.337187e-002, -8.693373e-003, 1.240242e-002, 2.085508e-003, -4.247504e-003, 4.596584e-003, 8.094043e-003, 6.200363e-003, 1.357681e-003, 1.047291e-003, 6.123520e-003, 1.478438e-002, 2.162603e-002, 3.039100e-002, 3.498880e-002, 3.319645e-002, 3.062912e-002, 1.994881e-002, 3.757593e-003, -7.875346e-003, -1.047578e-002, 2.276202e-003, 1.997305e-002, 2.068021e-002, 8.906799e-003, 1.110058e-002, 2.163556e-002, 1.058365e-002, -6.823157e-003, 6.518665e-003, 3.934374e-003, 5.235119e-003, -1.123150e-002, -1.408366e-002, -4.012959e-003, -1.771603e-002, -4.164016e-003, 6.990151e-004, -4.999813e-004, -3.921685e-004, -1.817847e-002, -6.712564e-003, 2.772753e-003, -1.502097e-003, 6.890276e-003, 9.695860e-003, -4.149968e-003, -2.125946e-002, -1.174647e-003, -8.959794e-003, -4.940679e-003, 1.217746e-002, 1.425320e-002, 6.555637e-003, -2.289538e-003, -7.670564e-003, -9.035921e-003, -3.500872e-003, 5.926749e-003, 2.069008e-002, 3.095399e-002, 3.105506e-002, 2.599537e-002, 1.323355e-002, -2.158428e-004, -1.251115e-002, -1.461854e-002, -2.927975e-003, 1.392590e-002, 1.229661e-002, 4.817668e-003, 1.603692e-002, 2.168331e-002, 1.193188e-003, -7.566583e-003, 1.827598e-002, 2.079903e-002, 1.226238e-002, -9.145004e-003, -1.390932e-002, -1.081692e-002, -2.066117e-002, -5.597843e-003, -1.111310e-003, -1.140540e-002, -5.235842e-003, -1.930180e-002, 7.885866e-004, 9.561029e-003, 2.427580e-003, 2.028455e-003, 7.863691e-003, -1.853075e-003, -2.659452e-002, -2.299161e-002, -1.438881e-002, -2.577141e-003, 5.333936e-003, 1.569064e-002, 5.396779e-003, -1.935154e-003, -2.659821e-003, -2.585780e-003, -2.268351e-003, 6.077504e-003, 2.120229e-002, 3.020878e-002, 2.908670e-002, 1.821477e-002, 3.037203e-003, -1.152442e-002, -1.838724e-002, -1.687989e-002, 1.219881e-003, 1.103061e-002, 8.958900e-003, 7.819368e-003, 1.949673e-002, 1.746259e-002, -1.018739e-002, -1.243355e-002, 1.464427e-002, 2.452741e-002, 1.289491e-002, -6.968051e-003, -2.897302e-004, -2.429495e-003, -1.271228e-002, 3.733021e-003, 1.036865e-002, -1.528903e-002, -6.765115e-003, -1.733806e-002, 1.465689e-003, 1.043462e-002, 3.829162e-003, -1.097414e-002, -3.217654e-003, -1.215808e-002, -2.089109e-002, -2.305698e-002, -8.481253e-003, 1.477767e-003, -8.845660e-004, 3.796670e-003, 1.803012e-003, 1.344384e-003, 9.603487e-003, 9.283808e-003, 7.872998e-003, 1.569010e-002, 2.816706e-002, 3.335302e-002, 2.943828e-002, 1.856094e-002, 2.140313e-003, -1.325943e-002, -1.685999e-002, -1.108771e-002, -1.243732e-003, 3.303421e-004, -3.117591e-003, 6.190396e-003, 2.061158e-002, 1.184200e-002, -1.592114e-002, -1.967187e-002, -2.058442e-004, 4.895821e-003, -2.641705e-003, -7.847196e-003, -1.078620e-003, 5.063152e-003, -1.442963e-002, 9.860704e-003, 1.966028e-002, -1.326965e-002, 8.673518e-004, -8.682414e-003, -5.596596e-003, -5.201719e-003, -4.247805e-003, -1.889957e-002, -1.343887e-002, -1.339466e-002, 4.570506e-003, -1.115832e-003, -1.208016e-003, 4.691663e-003, -4.926876e-004, -7.654498e-003, -8.164652e-003, -2.957113e-003, 9.525691e-003, 1.442729e-002, 1.579253e-002, 2.087772e-002, 2.563576e-002, 2.694779e-002, 2.235193e-002, 9.842826e-003, -4.082080e-003, -1.404841e-002, -1.329284e-002, -5.676750e-003, -8.703951e-003, -1.634043e-002, -8.255077e-003, 3.829977e-003, 6.867955e-003, 3.429977e-004, -1.583234e-002, -1.429709e-002, 7.272208e-005, -4.734254e-003, -2.265037e-002, -1.649398e-002, -7.337336e-003, -7.626104e-003, -2.468819e-002, -1.230972e-003, 2.537904e-002, 4.602078e-003, 2.170723e-002, 4.569238e-003, -5.603625e-003, -3.937890e-003, 8.315406e-003, -2.158903e-003, -3.873058e-003, -8.277543e-003, 1.980815e-002, 1.777937e-002, 7.948398e-003, 8.561423e-003, 4.203002e-003, -8.495012e-004, -6.094210e-003, -6.721583e-003, 9.692631e-003, 1.737605e-002, 1.930668e-002, 2.536530e-002, 2.907623e-002, 2.860050e-002, 2.117763e-002, 9.873427e-003, 3.410350e-003, 1.309407e-003, 1.366205e-004, 8.987422e-004, -1.031264e-003, -5.647429e-003, 2.608051e-003, -4.431535e-003, -8.265984e-003, -4.829746e-003, -8.283456e-003, -9.820249e-003, 1.100283e-002, 9.072483e-003, 7.686419e-004, -2.799497e-003, 4.218490e-003, -1.208801e-002, -3.038775e-002, -1.350734e-002, 1.589033e-002, 7.965615e-003, 1.561577e-002, -7.173088e-003, -2.063723e-002, 5.000603e-004, 1.152518e-002, 3.241393e-003, -6.148195e-003, -1.585614e-002, 7.650669e-003, 1.301460e-002, 7.433402e-004, -3.317054e-004, 1.131816e-003, -5.447211e-003, -1.424881e-002, -2.337437e-002, -1.746291e-002, -8.023397e-003, -4.194024e-003, -2.036908e-003, 7.888715e-004, -2.420478e-003, -4.459509e-003, -8.269134e-003, -8.041286e-003, -4.479419e-003, 1.234349e-004, 2.659350e-002, 2.549988e-002, 2.235594e-002, 1.503811e-002, 5.945525e-003, 5.766269e-004, 7.877863e-003, 3.734835e-003, -2.417415e-003, 1.380857e-002, 1.744745e-002, 1.945741e-002, 2.486782e-002, 3.897551e-002, 1.339525e-002, -1.637867e-002, 2.791778e-003, 2.562063e-002, 1.340685e-002, 2.008229e-002, 1.734347e-002, -4.411012e-003, 1.223723e-002, 2.205023e-002, 1.573774e-002, -1.309257e-003, -1.087060e-002, 7.372921e-004, 4.729220e-003, 3.183627e-003, 1.033056e-002, 1.232030e-002, 1.395599e-002, 7.683071e-003, -5.532312e-003, -4.553935e-003, 7.790525e-004, 7.226443e-004, 3.798112e-004, -3.264694e-003, -4.112214e-003, -2.308702e-003, 1.908811e-005, 2.212150e-003, 7.055724e-003, 1.863122e-002, 2.945783e-002, 2.948194e-002, 1.241907e-002, -4.851852e-003, -1.104049e-002, 1.355746e-003, 1.008500e-002, -9.362678e-003, -1.064278e-002, -6.196578e-004,

© ISO/IEC 2004 — All rights reserved


Copyright International Organization for Standardization
Provided by IHS under license with ISO
No reproduction or networking permitted without license from IHS
Not for Resale

1.984634e-002, 2.056618e-002, 1.503740e-002, 2.288578e-002, 8.180344e-003, 1.641559e-002, 6.352620e-003, 2.280485e-002, 1.175129e-002, 2.035548e-002, 1.456731e-002, -6.577065e-003, 1.590019e-003, 1.580407e-002, 1.773288e-002, -3.179303e-003, -1.650576e-002, -4.696362e-003, -1.157312e-002, -1.000643e-002, 9.677793e-003, 1.329895e-002, 1.371181e-002, 8.150707e-003, 1.324911e-003, -2.545530e-004, 9.568816e-004, -8.617888e-004, -1.394747e-003, -5.123003e-003, -5.590625e-003, -2.732972e-003, -9.921746e-004, 2.437951e-003, 8.363150e-003, 1.876638e-002, 2.408273e-002, 1.794168e-002, -2.905188e-004, -1.090259e-002, -1.217759e-002, 1.100426e-002, 2.105582e-002, 1.357137e-003, -1.757140e-002, 9.109215e-004, 1.729200e-002, 1.560236e-002, 6.030404e-003, 1.019028e-002, -8.579167e-003, -3.027147e-003, -6.820555e-003, 1.142249e-002, -4.336222e-003, 4.063434e-003, -1.832018e-003, -1.747491e-002, -4.764380e-003, 9.027313e-003, 4.492516e-003, 3.126804e-004, -8.289233e-003, -4.150341e-003, -1.384531e-002, -2.778415e-002, -1.017462e-002, -3.633304e-003, -1.214387e-002, -1.281228e-002, -6.511332e-003, -3.556659e-003, -4.868623e-003, -7.924680e-003, -1.026032e-002, -7.114588e-003, -6.138100e-003, -7.102429e-003, -6.612557e-003, -8.625654e-003, -1.066626e-002, -8.352768e-003, -6.935422e-003, -9.775318e-003, -1.830932e-002, -1.930752e-002, -1.248230e-002, 5.277440e-003, 1.864712e-002, 8.403420e-003, -1.379453e-002, -5.031220e-003, 7.600117e-003, 7.464316e-004, -9.466153e-003, -9.331091e-003, -1.702714e-002, -1.654459e-002, -3.270951e-002, -1.136142e-002, -2.400452e-002, -2.417415e-002, -1.986986e-002, -9.818821e-003, -8.858171e-003, -1.382695e-002, -3.306401e-003, 3.072926e-003, -3.108018e-003, -8.569086e-003, -2.552632e-002, -3.923785e-002, -2.708455e-002, -2.127256e-002, -2.737674e-002, -2.387589e-002, -1.076879e-002, 3.169290e-003, 4.064686e-003, -1.626326e-003, -5.095933e-003, -5.625237e-003, -8.632619e-003, -1.098946e-002, -1.316865e-002, -2.436555e-002, -3.143088e-002, -3.003005e-002, -2.203571e-002, -1.626843e-002, -1.939175e-002, -1.455258e-002, -1.952860e-003, 8.378751e-003, 9.540827e-003, 1.168331e-002, 8.575454e-003, 1.227655e-002, 1.123665e-002, -9.818115e-003, -1.440833e-002, -5.013115e-003, 8.456290e-003, 1.957531e-002, -1.968165e-002, -3.053794e-002, -1.514374e-002, -1.493800e-003, 1.024939e-002, 1.285105e-002, 6.375730e-004, -1.727667e-003, 9.705749e-003, 2.018083e-002, 1.501469e-002, 1.275311e-002, 5.190321e-003, -9.619507e-003, -1.336950e-002, -1.282168e-002, -1.708387e-002, -1.825681e-002, -9.182621e-003, 7.327579e-003, 1.761126e-002, 1.967009e-002, 1.821501e-002, 1.199728e-002, 5.724812e-003, -7.371011e-004, -6.211564e-003, -1.389750e-002, -1.597982e-002, -1.474122e-002, -8.013665e-003, -5.945729e-004, -3.104784e-003, -2.638992e-003, 3.205329e-003, -4.212476e-002, -4.094994e-002, -2.673804e-002, -1.261809e-002, 8.587851e-003, 1.312203e-002, 9.756695e-004, -8.123428e-003, 7.353543e-003, 3.707337e-002, 3.557087e-002, 4.235543e-003, -1.462312e-002},
{6.139554e-003, 3.559136e-003, -2.615901e-004, -9.856799e-004, 3.257581e-003, -6.047463e-004, -4.260372e-003, 4.471000e-003, 1.302991e-002, -1.430456e-004, -7.534135e-003, -6.366595e-003, 3.457496e-003, 1.443361e-002, 1.610416e-002, 1.521475e-002, 1.429861e-002, 1.192744e-002, 5.922180e-003, 2.384536e-003, 3.328257e-003, 5.936577e-003, 2.637551e-003, -1.391254e-003, -5.281597e-003, -1.059950e-002, -1.591741e-002, -1.796689e-002, -2.027544e-002, -2.851540e-002, -3.189529e-002, -1.975355e-002, -4.856165e-003, 6.827887e-003, 9.154425e-003, -4.082153e-003, -1.619533e-002, -5.407575e-003, 9.663924e-003, 1.077723e-002, -3.996281e-004, -5.899135e-003, -1.087394e-002, -2.387313e-002, -1.161384e-002, 6.411514e-004, 1.226166e-003, 4.589003e-003, -1.073232e-003, -1.955576e-003, -3.234837e-003, -1.010178e-002, 2.475221e-004, 1.738477e-002, 1.051122e-002, -1.009620e-002, -1.386344e-002, -1.492406e-003, 1.302359e-002, 1.763176e-002, 2.140518e-002, 2.359115e-002, 2.516818e-002, 2.419646e-002, 1.934634e-002, 1.331129e-002, 1.104206e-002, 9.712128e-003, 8.277205e-003, 1.194963e-003, -5.829206e-003, -4.736459e-003, -5.806938e-003, -1.153824e-002, -1.399114e-002, -1.406651e-002, -1.429479e-002, -1.005568e-002, -6.532307e-003, 8.329422e-003, 1.619909e-002, 1.591674e-002, -4.846112e-003, -2.262991e-002, -7.691819e-003, 1.800093e-003, -4.728384e-003, -1.349542e-002, -2.583944e-002, -2.787984e-002, 8.489396e-004, 1.547095e-002, 2.236892e-003, 6.411366e-003, -6.200638e-003, -9.883304e-003, -1.199816e-002, -7.203414e-003, 4.667871e-003, 6.146980e-003, -1.434379e-002, -2.393472e-002, -2.076334e-002, -1.313444e-002, -5.922780e-003, 3.686840e-003, 1.205774e-002, 1.324346e-002, 1.406231e-002, 4.945971e-003, -1.321480e-003, -3.697523e-003, -4.911164e-003, -8.011785e-003, -1.133739e-002, -2.190939e-002, -2.615839e-002, -2.196779e-002, -1.776537e-002, -1.859387e-002, -2.112224e-002, -2.031281e-002, -1.152443e-002, -1.021803e-003, 3.581968e-003, 1.825231e-003, 9.088393e-004, 8.978195e-003, 6.972993e-003, -5.944357e-003, -1.076804e-002, 7.754951e-003, 1.195673e-002, 1.194681e-002, 7.489070e-003, -5.145838e-003, 1.438107e-002, 2.834110e-002, 2.729440e-003, 3.156156e-003, -1.001615e-002, -8.184196e-003, -9.355987e-003, -2.006872e-003, -9.488157e-004, -1.066735e-002, -1.963708e-002, -1.472337e-002, -1.007619e-002, -7.962844e-003, -9.762172e-004, 1.121005e-002, 1.465697e-002, 1.225910e-002, 8.796429e-003, 6.957051e-003, 9.063997e-003, 1.300231e-002, 1.320705e-002, 4.180428e-003, -1.040740e-002, -2.391088e-002, -2.855431e-002, -2.186341e-002, -1.379834e-002, -4.327216e-003, 6.505208e-004, -1.178733e-003, -1.568897e-003, 1.291362e-002, 2.279054e-002, 2.894301e-002, 1.632915e-002, 9.057535e-003, 1.330946e-002, 1.449398e-002, 4.489969e-003, -5.590526e-004, 1.361284e-002, 1.092639e-002, 1.420946e-002, 9.913446e-003, 1.977743e-002, 3.126748e-002, -1.054620e-002, -1.085941e-002, -2.273544e-002, -2.093044e-002, -2.047678e-002, -1.505780e-002, -2.082125e-002, -2.508763e-002, -


© ISO/IEC 2004 — All rights reserved

Copyright International Organization for Standardization
Provided by IHS under license with ISO
No reproduction or networking permitted without license from IHS
Not for Resale

2.065418e-002, -1.235463e-002, -1.697951e-002, -1.270196e-002, 1.274438e-003, 7.402174e-003, 7.092171e-003, 1.184739e-002, 2.135947e-002, 2.505520e-002, 2.604265e-002, 2.784123e-002, 2.065318e-002, 4.376897e-003, -2.027883e-002, -4.057012e-002, -5.103003e-002, -4.319475e-002, -2.454319e-002, -5.219752e-003, 1.268077e-002, 2.089505e-002, 1.613463e-002, 1.509667e-002, 2.285649e-002, 3.361642e-002, 3.881310e-002, 1.797919e-002, 5.148349e-003, 4.855988e-003, 7.691342e-003, -7.501012e-003, -3.246646e-003, -4.317504e-003, 8.886251e-003, 1.099634e-002, 1.711122e-002, 2.924474e-002, -4.306882e-003, -6.452710e-003, -1.325706e-002, -1.208563e-002, -3.003173e-002, -3.086335e-002, -3.196564e-002, -3.040514e-002, -1.757260e-002, -2.851551e-002, -2.935834e-002, -2.714953e-002, -2.377259e-002, -1.586274e-002, -2.864952e-003, 1.225881e-002, 2.559015e-002, 3.475760e-002, 3.810608e-002, 3.380831e-002, 1.285123e-002, -1.626019e-002, -5.194903e-002, -7.921301e-002, -8.920984e-002, -7.630902e-002, -5.150553e-002, -2.223754e-002, 6.818627e-003, 2.645546e-002, 3.624773e-002, 2.730132e-002, 1.493225e-002, 1.427004e-002, 2.446654e-002, 2.430502e-002, -1.642018e-003, -1.731243e-002, -1.301047e-002, -1.690458e-002, -2.667635e-002, -2.182938e-002, -1.219458e-002, -4.484636e-003, -2.785152e-003, 9.207509e-003, 2.880458e-003, 6.529975e-003, -1.161546e-003, -8.516070e-004, -2.108845e-002, -1.274251e-002, -2.029578e-002, -7.381197e-003, -1.253870e-002, -2.191851e-002, -2.943457e-002, -3.113137e-002, -1.916932e-002, -4.405070e-003, 4.849654e-003, 2.005789e-002, 3.667412e-002, 5.361976e-002, 5.386933e-002, 4.601683e-002, 1.833682e-002, -1.733227e-002, -5.476092e-002, -8.341067e-002, -8.879824e-002, -7.265097e-002, -4.456293e-002, -1.774866e-002, 7.462254e-003, 3.177093e-002, 5.255702e-002, 4.980289e-002, 3.182853e-002, 1.338291e-002, 1.375574e-002, 2.231754e-002, 1.842481e-002, -1.070893e-002, -2.212585e-002, -1.552628e-002, -2.074509e-002, -2.406496e-002, -1.839768e-002, -3.359108e-003, -4.833406e-003, 1.865636e-003, 1.551265e-002, 1.520563e-002, 4.474557e-003, 6.390020e-003, -4.468408e-003, 5.734526e-003, -1.405800e-003, 4.820724e-005, -5.951307e-003, -1.519607e-002, -2.566789e-002, -2.673232e-002, -1.231089e-002, -2.700317e-003, 6.812844e-003, 2.217010e-002, 3.643267e-002, 4.436830e-002, 4.748324e-002, 4.219913e-002, 2.180647e-002, -7.058554e-003, -3.908610e-002, -6.081026e-002, -6.319390e-002, -4.773138e-002, -2.068357e-002, 2.287735e-003, 1.873272e-002, 3.313427e-002, 4.343777e-002, 4.577124e-002, 2.752286e-002, 1.076268e-002, 2.706883e-004, 6.784029e-003, 1.459785e-002, 4.419773e-004, -2.226897e-002, -1.771526e-002, -9.049942e-003, -1.929295e-002, -1.480634e-002, -7.015798e-003, -5.121792e-003, -4.446258e-003, 2.933650e-002, 2.079060e-002, 4.562592e-003, 1.741994e-002, 1.642475e-002, 1.507908e-002, 7.908198e-003, 8.347045e-003, 5.631113e-003, -5.498492e-003, -1.887947e-002, -1.619941e-002, -1.319614e-002, -9.319427e-003, -5.125206e-003, 7.284982e-004, 1.121250e-002, 2.608661e-002, 3.833542e-002, 3.844232e-002, 2.695332e-002, 6.583365e-003, -1.542399e-002, -2.886015e-002, -2.620396e-002, -1.229317e-002, 6.827988e-003, 2.372250e-002, 2.951331e-002, 3.513617e-002, 3.134925e-002, 3.013302e-002, 1.314272e-002, -5.081368e-003, -1.425253e-002, -1.507390e-002, -6.062717e-003, -3.787767e-003, -2.314304e-002, -2.228116e-002, -3.781608e-003, -1.195378e-002, -1.933135e-002, -1.174682e-002, -7.009489e-003, -5.123555e-003, 3.742044e-002, 2.101423e-002, 8.801292e-003, 3.719128e-002, 3.260227e-002, 2.147417e-002, 9.739977e-003, 1.470604e-002, 1.191910e-002, 1.289515e-003, -7.338268e-003, -1.183709e-002, -1.661198e-002, -2.065798e-002, -1.609321e-002, -9.529704e-003, 8.096385e-006, 1.594976e-002, 2.783494e-002, 3.192773e-002, 2.519675e-002, 1.598094e-002, 1.754089e-003, -9.646976e-003, -7.374632e-003, 5.481044e-003, 2.021894e-002, 2.906521e-002, 3.164591e-002, 2.955900e-002, 2.123475e-002, 1.526008e-002, 2.386887e-003, -1.287529e-002, -2.262093e-002, -2.441453e-002, -2.213828e-002, -7.351940e-003, -2.107790e-002, -2.472447e-002, -4.110046e-003, 5.940201e-004, -1.140944e-002, -3.731315e-003, -1.081452e-002, -6.372975e-004, 3.502516e-002, 7.932485e-003, 1.287205e-002, 5.547813e-002, 4.213478e-002, 1.627270e-002, 1.310010e-002, 1.272548e-002, 1.719438e-002, 1.129438e-002, 4.231614e-003, -1.168313e-002, -2.675289e-002, -2.809643e-002, -1.414367e-002, -6.840464e-004, 7.137696e-003, 1.586290e-002, 2.373843e-002, 2.584825e-002, 2.132502e-002, 1.462205e-002, 3.396887e-004, -1.287962e-002, -1.137367e-002, -2.493169e-003, 1.026312e-002, 2.395125e-002, 2.603045e-002, 2.547516e-002, 1.979105e-002, 1.086410e-002, -3.644482e-004, -1.366697e-002, -1.973528e-002, -1.875244e-002, -2.729156e-002, -1.795861e-002, -1.834447e-002, -2.022253e-002, -6.855179e-003, 7.284766e-003, 4.917664e-003, 9.244231e-003, -1.751871e-004, 4.593905e-003, 2.936497e-002, 3.038126e-003, 1.919735e-002, 5.732138e-002, 3.342983e-002, 9.707423e-003, 1.343409e-002, 1.295156e-002, 1.891213e-002, 2.705910e-002, 1.021152e-002, -2.133552e-002, -3.252174e-002, -2.250418e-002, -4.308854e-003, 6.012476e-003, 1.538816e-002, 2.200859e-002, 1.690490e-002, 1.602280e-002, 1.127445e-002, 2.263385e-003, -1.288284e-002, -2.603006e-002, -2.713418e-002, -1.833449e-002, -6.146825e-003, 8.542023e-003, 1.460655e-002, 1.927454e-002, 1.474604e-002, 4.015709e-003, -5.925575e-003, -1.795092e-002, -1.848000e-002, -5.763756e-003, -1.370253e-002, -1.812330e-002, -1.622303e-002, -9.094057e-003, -3.043051e-003, 7.266454e-003, 1.651145e-002, 2.003150e-002, 7.720617e-003, 9.804197e-003, 2.459437e-002, 5.129500e-003, 1.958512e-002, 2.226850e-002, 1.470287e-002, 1.017507e-002, 1.172088e-002, 1.432346e-002, 3.043716e-002, 3.480948e-002, 2.005199e-006, -2.836896e-002, -2.369460e-002, -6.397185e-003, 5.827425e-003, 8.217775e-003, 2.006402e-002, 2.589259e-002, 1.594989e-002, 8.959731e-003, 3.827930e-004, -6.454855e-003, -2.057809e-002, -3.600952e-002, -

© ISO/IEC 2004 — All rights reserved


Copyright International Organization for Standardization
Provided by IHS under license with ISO
No reproduction or networking permitted without license from IHS
Not for Resale

3.977207e-002, -3.121536e-002, -2.014475e-002, -8.282742e-003, 3.709127e-003, 7.752619e-003, 7.603692e-003, -9.553944e-006, -1.039964e-002, -2.187454e-002, -1.649714e-002, 3.766441e-003, 3.970963e-003, -1.036619e-002, -9.218458e-003, 1.825051e-003, 5.496955e-003, 6.818840e-003, 1.704860e-002, 2.162229e-002, 7.616967e-003, 1.043088e-002, 1.839070e-002, 4.604793e-003, 7.761442e-003, -1.316199e-003, 2.721070e-003, 7.114056e-003, 6.494385e-003, 1.859204e-002, 3.916239e-002, 2.931181e-002, -1.031354e-002, -2.113600e-002, -7.610361e-003, 7.803141e-003, 1.114473e-002, 8.600752e-003, 1.943110e-002, 2.090657e-002, 8.527885e-003, 3.900481e-003, -5.108672e-003, -1.189832e-002, -2.044323e-002, -3.453857e-002, -4.097918e-002, -3.466946e-002, -2.310002e-002, -1.222159e-002, -3.951834e-003, 1.432845e-004, -6.546284e-004, -3.399214e-003, -7.787762e-003, -1.900564e-002, -1.186086e-002, 8.624014e-003, 2.142314e-002, 1.732502e-003, -3.165155e-003, 9.471373e-003, 1.622821e-002, 5.558492e-003, 9.662082e-003, 1.553740e-002, 6.471143e-003, 1.048308e-002, 8.687488e-003, -2.122057e-004, -1.723236e-003, -1.961320e-002, -4.930279e-003, 3.483166e-004, -2.758914e-004, 1.900954e-002, 3.718493e-002, 2.008001e-002, -3.609989e-003, -5.312058e-003, 7.550616e-003, 1.348494e-002, 9.031625e-003, 4.281670e-003, 5.968746e-003, 3.945175e-003, -5.490208e-003, -1.082428e-002, -1.857793e-002, -2.322398e-002, -2.379923e-002, -2.710652e-002, -3.168324e-002, -2.721196e-002, -1.965434e-002, -6.007453e-003, 2.084472e-003, 3.046565e-003, 4.784925e-003, 4.630049e-003, 2.560079e-003, -6.968856e-003, -5.665421e-003, 1.463054e-002, 2.969027e-002, 1.590258e-002, 5.849927e-004, 1.666028e-002, 2.592092e-002, 7.714595e-003, 6.789120e-003, -9.691339e-003, 6.407104e-003, 7.156660e-003, 2.179008e-003, -2.337089e-003, -7.836107e-003, -2.772177e-002, -6.355152e-003, -2.627256e-005, -7.494861e-004, 1.566303e-002, 2.958235e-002, 1.624370e-002, 8.685571e-003, 5.396239e-003, 7.464044e-003, 5.962962e-003, -2.234176e-003, -7.137968e-003, -5.345720e-003, -5.938986e-003, -9.994997e-003, -1.060938e-002, -2.181667e-002, -2.451116e-002, -2.462239e-002, -2.435555e-002, -2.299071e-002, -1.529214e-002, -6.338947e-003, 2.246488e-003, 1.069402e-002, 1.188201e-002, 1.300442e-002, 1.250298e-002, 6.317945e-003, -1.052909e-003, -2.282383e-003, 1.680124e-002, 3.292181e-002, 2.151571e-002, 5.808805e-003, 1.885128e-002, 3.464060e-002, 1.340742e-002, 6.848119e-003, -4.546988e-003, 8.076377e-003, -1.581312e-003, -7.455907e-003, 2.588933e-003, -4.522383e-003, -2.175356e-002, -1.126932e-003, 3.377065e-003, -3.827635e-003, 6.430375e-003, 1.532601e-002, 1.542763e-002, 1.883275e-002, 6.776918e-003, -8.293713e-003, -1.380192e-002, -1.333420e-002, -1.031403e-002, -2.271448e-003, 5.246102e-003, 8.382055e-003, 7.738420e-003, -3.683644e-003, -1.118913e-002, -1.435690e-002, -1.607522e-002, -9.949913e-003, 4.064179e-003, 1.916488e-002, 2.565657e-002, 3.089087e-002, 3.030748e-002, 2.825993e-002, 1.972482e-002, 5.501610e-003, -9.993558e-003, -1.350897e-002, 6.898693e-003, 2.837919e-002, 1.596871e-002, 5.303310e-003, 1.470011e-002, 3.106984e-002, 1.522171e-002, 9.905768e-003, -7.290974e-003, 7.462643e-003, -8.489672e-003, -1.035900e-002, 7.120293e-003, 4.685515e-003, -8.083991e-003, 1.109624e-002, 1.220017e-002, -1.190775e-002, 1.097870e-003, 5.734543e-003, 1.244249e-002, 1.458789e-002, -1.609935e-002, -3.586429e-002, -3.872345e-002, -3.281686e-002, -2.205279e-002, -2.776919e-003, 1.440379e-002, 2.898071e-002, 3.259417e-002, 2.434483e-002, 1.196275e-002, 2.932114e-003, -4.021309e-003, 3.627346e-003, 1.961385e-002, 3.257923e-002, 3.727484e-002, 4.232795e-002, 4.120641e-002, 3.198522e-002, 1.571387e-002, -7.001941e-003, -3.495943e-002, -4.837365e-002, -2.908788e-002, 6.938569e-003, 5.074587e-003, -2.090810e-003, 8.906681e-003, 2.083138e-002, 8.226930e-003, 1.397847e-002, -2.780284e-003, 6.887198e-003, -1.439838e-002, -1.124331e-002, 8.448395e-003, 9.518543e-003, 1.463609e-003, 2.289679e-002, 1.816538e-002, -1.185978e-002, 1.040005e-003, -3.566811e-003, -7.306780e-004, -1.572467e-003, -3.121265e-002, -4.315594e-002, -4.137882e-002, -2.914964e-002, -1.130217e-002, 1.352797e-002, 2.428237e-002, 3.664901e-002, 3.845676e-002, 3.184128e-002, 1.976869e-002, 2.685981e-003, -1.055852e-002, -6.312431e-003, 5.212049e-003, 1.942281e-002, 3.150263e-002, 4.472244e-002, 5.213176e-002, 4.802774e-002, 3.609341e-002, 8.123061e-003, -2.861254e-002, -6.577416e-002, -6.189038e-002, -2.364815e-002, -7.178373e-003, -1.010577e-002, -1.401845e-003, 6.974552e-003, -3.368696e-003, 1.308140e-002, 4.352946e-003, 9.435946e-003, -1.689761e-002, -2.033185e-002, 5.032834e-003, 1.052573e-002, 1.787366e-003, 2.539066e-002, 1.741530e-002, -9.752768e-003, 3.662511e-004, -8.865215e-003, -7.246304e-003, 1.013776e-002, 4.406352e-003, 4.137396e-003, 1.109346e-002, 1.418886e-002, 9.417626e-003, 7.208842e-003, 2.685449e-003, 1.295057e-003, 2.899211e-003, -2.700520e-003, -1.161966e-002, -2.898391e-002, -4.042644e-002, -4.437530e-002, -4.189617e-002, -3.131698e-002, -1.094989e-002, 1.850107e-002, 4.489523e-002, 5.862744e-002, 6.847097e-002, 6.283641e-002, 3.232870e-002, -1.717986e-002, -4.354568e-002, -2.568804e-002, -7.802481e-003, -6.216522e-003, -4.351380e-003, -5.423181e-003, -1.420429e-002, 9.174756e-003, 2.150158e-003, 7.330365e-003, -1.641607e-002, -2.646037e-002, 3.874056e-003, -1.243096e-002, 1.312498e-003, 1.452259e-002, 9.025960e-003, -8.501737e-003, -3.713924e-003, -1.644072e-002, -1.960362e-003, 3.870520e-002, 4.242656e-002, 4.481503e-002, 4.974277e-002, 4.020558e-002, 1.649130e-002, 6.746716e-005, -9.629763e-003, -2.204633e-002, -2.640139e-002, -2.718028e-002, -4.473632e-002, -5.424143e-002, -6.072239e-002, -6.982014e-002, -6.543407e-002, -4.779271e-002, -2.613416e-002, -1.272016e-002, -6.548004e-003, -1.551768e-003, 1.288638e-002, 3.271049e-002, 3.684421e-002, 1.927902e-002, -3.259852e-003, -1.392444e-002, 1.069677e-003, 9.105490e-003, -7.945936e-003, -


© ISO/IEC 2004 — All rights reserved

Copyright International Organization for Standardization
Provided by IHS under license with ISO
No reproduction or networking permitted without license from IHS
Not for Resale

2.393964e-002, -2.805650e-002, 8.827333e-003, 1.001520e-003, 5.289909e-003, -1.308110e-002, -2.189206e-002, 4.684028e-003, -1.377333e-002, -5.708439e-003, -4.078758e-003, -6.412639e-003, -9.261337e-003, -4.451452e-003, -2.392835e-002, -4.608732e-003, 2.500496e-002, 1.395950e-002, 1.884487e-002, 2.728525e-002, 3.282596e-002, 2.878223e-002, 2.466976e-002, 2.818297e-002, 2.727614e-002, 2.104238e-002, 1.463251e-003, -2.741922e-002, -3.908696e-002, -3.784326e-002, -4.840382e-002, -3.716895e-002, -9.741831e-003, 1.254754e-003, -3.535659e-003, -1.377674e-002, -2.323557e-002, -1.064885e-002, 7.272565e-003, 1.114981e-002, 8.807687e-003, 1.506622e-003, -1.590645e-002, -8.276250e-004, 2.020102e-002, -7.566490e-003, -3.595099e-002, -4.044975e-002, 5.545542e-003, 2.296483e-003, 1.115852e-002, -5.464855e-003, -2.063821e-002, 1.708656e-003, -1.411814e-002, -5.797720e-003, -1.558519e-002, -2.422620e-002, -1.701010e-002, -9.332974e-003, -1.972321e-002, -1.691628e-002, 6.277730e-003, -1.099089e-002, -1.503082e-002, -1.076724e-002, 7.306162e-003, 1.486736e-003, -4.772715e-003, 8.173432e-003, 3.206879e-002, 4.706193e-002, 5.589432e-002, 2.057533e-002, 1.460912e-002, 3.119596e-002, 1.149561e-002, 1.225194e-002, 2.602352e-002, 1.743963e-002, -2.163138e-003, -3.332939e-002, -5.832947e-002, -4.086598e-002, -1.515579e-002, -3.901175e-003, -5.211639e-003, -8.817532e-003, -2.767204e-002, -1.685790e-002, 1.770163e-002, 8.142698e-004, -3.035126e-002, -4.029569e-002, 5.658901e-003, 3.552778e-003, 2.916682e-003, 1.035842e-003, -2.491614e-002, 1.917908e-003, -1.371097e-002, -1.652773e-002, -3.246317e-002, -3.286652e-002, -2.292000e-002, -3.430999e-003, -1.545747e-002, -1.609341e-002, -7.064221e-003, -1.963751e-002, -2.321635e-002, 2.396390e-003, 3.523096e-002, -3.129737e-003, -3.663444e-002, -1.634436e-002, 5.605159e-003, 3.785640e-002, 6.907784e-002, 5.302437e-002, 6.920597e-002, 8.355019e-002, 6.109755e-002, 4.299221e-002, 3.033010e-002, 1.778671e-002, 7.796699e-003, -9.807090e-004, -4.634665e-002, -2.960699e-002, 7.189122e-003, -1.241932e-002, -1.157545e-002, -5.316072e-003, -1.952588e-002, -3.060689e-002, 3.702629e-003, 1.451763e-002, -1.204665e-002, -1.065421e-002, 1.416532e-002, 1.202602e-002, 8.170623e-003, 3.757426e-004, -3.098798e-002, 4.723047e-003, -8.735251e-003, -1.257306e-002, -3.531443e-002, -3.161148e-002, -2.736798e-002, -1.038038e-002, -1.257299e-002, -9.792275e-003, -1.433447e-002, -3.824555e-002, -4.326019e-002, -8.255943e-003, 1.751010e-002, -3.035613e-002, -4.505128e-002, 1.131800e-002, 1.840463e-002, 3.715686e-002, 5.365027e-002, 5.826969e-002, 7.126324e-002, 7.403649e-002, 7.872689e-002, 4.930449e-002, 3.633753e-002, 3.477962e-002, 5.536236e-002, 3.674280e-002, -4.271988e-002, -6.022409e-002, -3.003661e-002, -3.503213e-002, -3.069650e-002, -1.021578e-002, -1.812245e-002, -4.532495e-002, -3.310298e-002, 8.314544e-003, 6.599115e-003, 9.383301e-003, 1.785685e-002, 7.484529e-003, 3.139963e-003, 4.175813e-003, -3.277591e-002, 3.166416e-003, -5.658947e-003, 4.729225e-003, -8.156293e-003, -5.972125e-003, -5.559124e-003, 6.997736e-003, 5.968420e-003, 5.553761e-003, -6.466788e-003, -4.082531e-002, -5.973052e-002, -4.608979e-002, -2.061578e-002, -1.418413e-002, 1.340433e-003, 1.754862e-002, 2.045419e-002, 2.162181e-002, 2.911800e-002, 5.071869e-002, 4.489451e-002, 3.665790e-002, 4.996613e-002, 3.578348e-002, 3.508774e-002, 3.585458e-002, 3.666295e-002, 2.815927e-002, -9.583897e-003, -3.533773e-002, -4.094092e-002, -6.812462e-002, -4.880461e-002, -1.097613e-002, -1.089885e-002, -2.892910e-002, -2.256058e-002, 1.564617e-002, 1.981669e-002, 8.672368e-003, 6.336077e-003, 2.661359e-003, -4.886467e-003, -1.193253e-003, -3.467503e-002, 4.414844e-003, -3.059820e-003, 1.155624e-002, 1.153119e-002, 1.685977e-002, 7.782189e-003, 2.542422e-002, 2.022704e-002, 2.191060e-002, -4.754239e-004, -3.704206e-002, -5.786564e-002, -4.502106e-002, -1.724634e-002, 6.168316e-003, 2.058285e-002, 2.392641e-002, 1.511102e-002, -3.332420e-003, 6.628926e-003, 3.153494e-002, 1.113835e-002, 2.939616e-003, 1.724569e-002, 2.817177e-002, 9.487651e-003, 3.042466e-002, 4.268336e-002, 3.932534e-002, 1.977917e-002, -7.489590e-003, -3.227961e-002, -5.800703e-002, -4.302078e-002, -8.483005e-003, 4.302610e-004, -1.063418e-002, -9.575195e-003, 1.748381e-002, 2.423558e-002, -4.691695e-003, -1.213418e-002, -2.955259e-003, -1.296223e-002, -5.613514e-004, -2.633779e-002, 1.400940e-002, 1.367509e-003, 1.172172e-002, 2.885098e-002, 2.493553e-002, 1.344738e-002, 2.973564e-002, 1.594269e-002, 2.828518e-002, 9.536260e-003, -1.607388e-002, -3.396939e-002, -2.421564e-002, 1.801986e-003, 1.980096e-002, 2.426391e-002, 1.219181e-002, -1.203479e-002, -2.511860e-002, -1.070854e-002, 7.052247e-003, -2.188928e-002, -2.073408e-002, -5.869929e-003, 6.034944e-003, -6.760706e-003, -6.080182e-003, 2.313755e-002, 3.811624e-002, 3.292335e-002, 1.110427e-002, -1.243552e-002, -3.621818e-002, -2.829037e-002, 7.564346e-003, 9.940965e-003, 4.984075e-003, -6.448310e-004, 1.619695e-002, 1.128661e-002, -1.951485e-002, -2.466105e-002, -4.959973e-003, -1.710835e-002, -5.978973e-004, -1.262855e-002, 1.796741e-002, -3.196164e-003, -1.088139e-003, 2.208370e-002, 2.055602e-002, 9.064543e-003, 2.212204e-002, 1.465184e-002, 2.337403e-002, 2.669914e-002, 6.807227e-003, -3.946174e-003, -7.466148e-004, 1.246077e-002, 1.572363e-002, 7.017439e-003, -1.589601e-002, -3.982390e-002, -4.926054e-002, -1.418427e-002, -2.317952e-002, -4.257046e-002, -3.298639e-002, -2.017746e-002, -1.758458e-002, -4.136973e-003, -2.508877e-002, -1.189881e-002, 8.594084e-003, 1.992890e-002, 1.302303e-002, -8.471993e-004, -1.642682e-002, -1.382267e-002, 1.273423e-002, 1.576649e-002, 1.465362e-002, 9.947001e-003, 9.501283e-003, -6.316331e-004, -2.614800e-002, -1.620119e-002, -4.842991e-003, -2.168580e-002, -1.883936e-002, -4.711193e-003, -3.906602e-004, -6.732317e-003, -1.290679e-002, 3.785662e-003, 1.177955e-002, -6.756184e-003, 1.266319e-002, 1.128755e-002, 1.849008e-002,

© ISO/IEC 2004 — All rights reserved


Copyright International Organization for Standardization
Provided by IHS under license with ISO
No reproduction or networking permitted without license from IHS
Not for Resale

2.942376e-002, 2.210496e-002, 1.070391e-002, 9.486766e-003, 9.060159e-003, -2.815981e-005, -1.845790e-002, -4.359649e-002, -5.767453e-002, -3.338810e-002, -2.048893e-002, -3.047808e-002, -3.443900e-002, -2.703988e-002, -2.815225e-002, -3.357965e-002, -1.803056e-002, -1.318441e-002, -2.583020e-002, -2.420645e-002, -1.170111e-002, -2.548640e-003, -1.977439e-003, -6.800373e-003, -6.449625e-004, 1.936149e-002, 2.417405e-002, 1.671757e-002, 1.265040e-002, -5.224792e-004, -8.862195e-003, -2.109789e-002, -3.095824e-003, -2.605020e-005, -2.031164e-002, -2.075714e-002, 3.978010e-003, 1.952316e-005, 2.669287e-004, -2.099668e-002, -9.748394e-003, 6.345381e-003, -1.767926e-002, -3.698158e-003, 4.373074e-003, 7.842349e-003, 2.253091e-002, 2.435381e-002, 1.861075e-002, 6.879302e-003, -8.630052e-003, -2.656669e-002, -4.463369e-002, -5.279444e-002, -3.525498e-002, -1.746211e-002, -1.885017e-002, -1.921932e-002, -1.595184e-002, -8.740267e-003, -1.632872e-002, -4.483979e-002, -4.378181e-002, -1.045333e-002, -1.002544e-002, -2.305717e-002, -2.541495e-002, -1.905066e-002, -1.289989e-002, -4.445016e-003, 7.375787e-003, 2.413286e-002, 2.478256e-002, 1.594024e-002, 6.185155e-003, -5.044427e-003, -1.562982e-002, -1.640095e-002, 4.203353e-003, 7.703822e-003, -1.274452e-002, -4.186224e-002, 3.162468e-003, -3.315179e-004, -1.180146e-003, -2.528915e-002, -9.263130e-003, 3.197607e-003, -2.029886e-002, -1.392086e-002, -2.089229e-003, -6.999063e-004, 1.061726e-002, 1.718846e-002, 1.107918e-002, 4.664164e-003, -6.965801e-003, -2.292085e-002, -3.545776e-002, -3.511014e-002, -1.106932e-002, -8.438207e-003, -6.856707e-003, -1.911953e-002, -1.653475e-002, -2.173550e-004, 2.583477e-003, -3.024046e-002, -5.713882e-002, -2.660446e-002, 4.686594e-003, -4.258676e-003, -1.142510e-002, -9.122794e-003, -5.335592e-003, -1.621948e-003, 4.651478e-003, 1.490442e-002, 1.647587e-002, 1.358503e-002, 7.192574e-003, -3.664497e-003, -1.239498e-002, -2.754780e-003, 9.726873e-003, 1.591600e-002, -2.156228e-004, -3.174613e-002, 9.111361e-003, 7.370645e-004, -1.847253e-004, -2.281971e-002, -1.522579e-002, 8.143064e-003, -1.709071e-002, -2.122728e-002, -8.521167e-003, -1.010519e-002, -2.101433e-003, 7.015550e-005, -2.435161e-003, -7.122405e-003, -1.555196e-002, -2.493403e-002, -2.946461e-002, -1.860281e-002, -4.763057e-003, -1.249730e-002, -1.573320e-002, -4.074881e-002, -3.327763e-002, -5.976581e-003, -1.403029e-003, -2.523807e-002, -3.912521e-002, -3.008522e-002, 4.590411e-003, 5.030290e-003, -9.463828e-003, -1.507132e-002, -1.440095e-002, -1.321898e-002, -5.044744e-003, 6.504331e-003, 1.343606e-002, 1.148335e-002, 9.563947e-003, 4.513695e-003, 8.719193e-003, 1.048159e-002, 1.193694e-002, 1.955446e-002, 1.843218e-002, -4.144955e-003, 8.070069e-003, 8.995398e-003, 6.507279e-003, -1.915042e-002, -2.387159e-002, 1.584358e-003, -1.177398e-002, -1.923844e-002, -1.252419e-002, -1.293664e-002, -9.987707e-003, -1.074477e-002, -1.073023e-002, -1.300612e-002, -1.472709e-002, -1.484667e-002, -9.836137e-003, -2.923453e-003, -8.746327e-003, -1.595896e-002, -1.486910e-002, -2.984514e-002, -2.651597e-002, -2.101437e-002, -7.862892e-003, -2.645334e-002, -2.914100e-002, -1.284091e-002, 1.394306e-002, 1.836417e-002, 7.733249e-003, -3.983005e-003, -1.147600e-002, -1.471412e-002, -6.314406e-003, 6.751843e-003, 1.081107e-002, 1.138446e-002, 1.461192e-002, 2.129326e-002, 2.343791e-002, 5.437519e-003, 2.375620e-003, 1.115020e-002, 2.972589e-002, 1.387228e-002, 9.645426e-004, 7.271182e-003, 9.474479e-003, -9.816713e-003, -3.181395e-002, -1.401997e-002, -8.568972e-003, -6.782281e-003, -1.473084e-002, -1.400415e-002, -1.401984e-002, -1.256857e-002, -7.852619e-003, -8.365977e-003, -4.054212e-003, 3.710524e-003, 1.306772e-002, 1.243725e-002, 6.373391e-003, 2.199000e-003, 9.699076e-003, 1.533964e-002, -7.326102e-003, -1.716652e-002, 2.721831e-003, 1.248383e-002, 8.120887e-003, 8.471966e-003, 2.650645e-002, 2.990472e-002, 2.589792e-002, 1.327171e-002, 5.874430e-004, -8.085572e-003, 4.217252e-004, 8.822714e-003, 7.427937e-003, 8.424729e-003, 2.013114e-002, 3.198191e-002, 2.317313e-002, -9.549653e-003, -1.440545e-002, -4.230730e-004, 3.879198e-002, 2.217709e-002, -1.080876e-002, -1.628327e-003, 9.809252e-003, -3.477431e-003, -3.480289e-002, -3.804459e-002, -1.744667e-002, 6.188808e-003, -1.219749e-002, -1.750948e-002, -1.150839e-002, -9.848706e-003, -9.193143e-004, 5.925403e-004, 1.008322e-002, 2.490082e-002, 3.209369e-002, 2.575657e-002, 1.175925e-002, 5.298884e-003, 1.432280e-003, -3.289936e-003, -3.527872e-003, -2.696307e-003, -4.866769e-003, -1.094641e-003, 2.411163e-003, 1.416696e-002, 2.930048e-002, 3.247558e-002, 3.448610e-002, 2.669108e-002, 9.290368e-003, -3.473286e-003, 4.011499e-003, 7.372522e-003, 4.115505e-003, 6.796812e-003, 1.952159e-002, 2.306949e-002, -1.604092e-003, -3.324912e-002, -2.744032e-002, -2.854489e-003, 4.635239e-002, 2.153671e-002, -1.524698e-002, -1.003128e-002, 1.103963e-002, -8.250058e-004, -2.504502e-002, -4.054804e-002, -1.979139e-002, 1.789100e-002, -2.965451e-003, -1.645580e-002, -5.509365e-003, -5.528536e-003, 2.119215e-003, 5.556238e-003, 2.017380e-002, 3.095418e-002, 2.518899e-002, 7.029125e-003, -8.069943e-003, -1.379041e-002, -1.615777e-002, -1.492625e-002, -2.615317e-003, 7.001265e-004, -7.283190e-003, -1.297374e-002, -1.150976e-002, 2.216760e-003, 1.478591e-002, 2.191760e-002, 2.827573e-002, 3.158863e-002, 1.522778e-002, 4.253780e-003, 4.213994e-003, 2.268601e-003, 1.195145e-003, -2.225476e-003, 9.969795e-003, 1.219677e-002, -8.716797e-003, -2.191507e-002, -2.276105e-002, -1.033791e-003, 4.043118e-002, 1.611784e-002, -1.254876e-002, -8.849805e-003, 9.359951e-003, 5.520376e-003, -1.216875e-002, -1.751134e-002, 1.355561e-003, 2.722844e-002, 5.375752e-003, -1.220395e-002, -2.537416e-003, -2.258832e-003, -5.608719e-004, 1.733238e-004, 9.784728e-003, 6.161479e-003, -9.453205e-003, -2.249907e-002, -1.806233e-002, -9.114925e-003, 2.410909e-004, 6.951607e-003, 1.675727e-002, 1.780727e-002, 1.059457e-002, 4.671512e-003,


© ISO/IEC 2004 — All rights reserved

Copyright International Organization for Standardization
Provided by IHS under license with ISO
No reproduction or networking permitted without license from IHS
Not for Resale

3.168443e-003, 1.250362e-003, 3.944086e-004, 2.169259e-004, 9.603997e-003, 1.642530e-002, 1.155945e-002, 6.071713e-003, 4.257974e-003, -3.170982e-003, -6.072285e-003, -1.361831e-002, -1.521092e-003, 9.652455e-003, 5.627384e-003, -5.584416e-003, -2.065482e-002, -3.005177e-003, 2.580255e-002, 1.065335e-002, -1.082283e-002, -8.470301e-003, 1.395997e-002, 7.441234e-003, -9.603831e-003, 6.873497e-003, 2.096335e-002, 2.681848e-002, 6.157001e-003, -1.344367e-002, -6.344841e-004, 1.878725e-003, -3.465275e-003, -1.248843e-002, -1.209753e-002, -2.470659e-002, -3.443878e-002, -2.182388e-002, 3.140054e-003, 1.686386e-002, 2.497326e-002, 3.478848e-002, 4.496890e-002, 3.816314e-002, 2.406104e-002, 1.982921e-002, 1.565914e-002, 1.243874e-002, 8.509596e-003, -2.986137e-004, 3.272123e-004, -6.769603e-003, -6.628292e-003, -3.396486e-003, -1.619571e-003, -1.090619e-002, -1.392896e-002, -2.247708e-002, -8.958245e-003, 1.204672e-002, 2.202018e-002, 3.481607e-003, -1.512070e-002, -6.971966e-003, 2.027671e-002, 7.289934e-003, 2.944134e-003, 1.202394e-003, 1.291022e-002, 2.078176e-003, -1.314466e-002, 1.985496e-003, 2.673311e-002, 1.877013e-002, 5.505630e-003, -1.181135e-002, 3.097946e-004, 1.478134e-003, -8.418882e-003, -2.787155e-002, -3.746985e-002, -4.613237e-002, -3.557488e-002, -9.217819e-003, 2.009504e-002, 3.333400e-002, 3.693158e-002, 4.428096e-002, 4.328943e-002, 3.587916e-002, 1.986738e-002, 1.078833e-002, -2.466228e-003, -8.895265e-003, -8.606632e-003, -1.381212e-002, -1.822851e-002, -3.582982e-002, -2.773090e-002, -1.225944e-002, -5.366926e-003, -9.985726e-003, -1.718237e-002, -2.117471e-002, -6.827237e-003, 1.250905e-002, 2.361720e-002, 3.435987e-003, -1.117021e-002, -1.027282e-002, -6.858183e-003, 6.915895e-003, 1.356864e-002, 7.667521e-003, 1.287702e-002, 1.556374e-003, -9.771477e-003, -6.136867e-003, 1.843527e-002, 5.994476e-003, 1.809163e-003, 1.155146e-003, 2.562093e-003, -2.087837e-003, -1.019520e-002, -3.118402e-002, -4.536559e-002, -4.114237e-002, -3.239952e-002, -1.672454e-002, -2.190231e-003, 1.198375e-002, 3.049795e-002, 4.237843e-002, 3.568760e-002, 3.145727e-002, 3.040936e-002, 2.275334e-002, 2.814032e-003, -2.008991e-002, -3.089429e-002, -4.188929e-002, -4.787089e-002, -5.236584e-002, -3.951596e-002, -1.820502e-002, -7.963765e-003, -1.992035e-003, -1.519766e-002, -9.438308e-003, -4.515990e-003, 1.273318e-002, 1.416952e-002, 1.627529e-003, -8.282170e-003, -1.694708e-002, -1.217199e-002, 4.400968e-003, 1.420161e-002, 8.005090e-003, 1.428102e-002, 5.790359e-003, -5.536481e-003, -1.179681e-002, 6.207850e-003, 3.329856e-003, -4.486927e-003, 6.260616e-003, 5.007045e-004, 2.686306e-004, -6.408751e-003, -2.364620e-002, -3.827437e-002, -2.642557e-002, -1.186146e-002, 2.830132e-003, 1.096064e-002, 1.819060e-002, 3.146807e-002, 3.988544e-002, 3.574652e-002, 2.978710e-002, 2.466309e-002, 2.058822e-002, 1.035282e-002, -1.846694e-003, -9.186464e-003, -1.703429e-002, -3.879072e-002, -5.078923e-002, -3.879353e-002, -1.833626e-002, -4.990639e-003, -1.726527e-003, -1.065099e-002, -5.216059e-003, -1.042656e-002, 7.749768e-003, 1.925845e-003, 2.933877e-003, -7.958455e-004, 1.980373e-003, -1.063206e-002, 3.313568e-003, 8.931500e-003, 1.691916e-003, 6.546198e-003, 1.463313e-002, 3.859266e-003, -8.410207e-003, 2.857692e-003, 2.179367e-003, -9.123879e-003, 8.312897e-003, 7.897737e-003, 4.553405e-003, -2.188761e-003, -1.372153e-002, -2.322244e-002, -7.726906e-004, 2.417109e-002, 3.672123e-002, 4.275826e-002, 3.773852e-002, 3.269018e-002, 2.255468e-002, 1.675286e-002, 1.152938e-002, 7.790061e-003, 1.146626e-002, 1.872160e-002, 2.561271e-002, 2.925590e-002, 2.345604e-002, -1.128567e-002, -3.442187e-002, -2.426206e-002, -7.628894e-003, 2.626367e-003, -8.076360e-003, -8.506809e-003, -6.219327e-003, -1.911183e-002, -1.035674e-003, 3.670876e-003, 6.478395e-003, -1.735056e-003, -3.864667e-003, -8.466725e-003, 9.949918e-004, 1.271425e-002, 1.853220e-003, 2.575151e-003, 1.372427e-002, 8.905430e-003, 5.871189e-004, 3.082360e-003, 5.886314e-003, -5.052052e-003, 5.187391e-003, 1.483703e-002, 2.393726e-003, -3.096121e-004, -2.708174e-003, -5.816629e-003, 1.145417e-002, 2.712195e-002, 3.799118e-002, 4.122253e-002, 4.501291e-002, 4.207155e-002, 2.993538e-002, 1.871157e-002, 1.401009e-002, 1.535664e-002, 2.729075e-002, 3.887849e-002, 4.767584e-002, 4.947627e-002, 4.078975e-002, 3.093114e-003, -2.076396e-002, -1.245808e-002, 3.182300e-003, 2.968742e-003, -1.256190e-002, 2.204429e-003, -5.012148e-003, -1.363567e-002, -5.396254e-003, 9.484503e-004, 1.498589e-002, 8.275160e-004, -2.221379e-003, -9.098865e-003, -1.890252e-003, 1.502898e-002, -1.572102e-003, -7.327047e-003, 2.819131e-003, 6.357104e-003, 1.287575e-002, 9.527216e-003, 1.676891e-002, 1.581389e-003, 2.356577e-003, 1.938599e-002, -9.465000e-004, -4.696887e-003, 4.944884e-003, 5.685940e-003, 6.970662e-003, 1.364399e-002, 2.286626e-002, 2.907403e-002, 3.414334e-002, 3.051364e-002, 1.813206e-002, 5.155743e-003, 4.514380e-003, 1.017195e-002, 2.336965e-002, 3.781925e-002, 4.805124e-002, 4.659804e-002, 3.029926e-002, -1.682962e-003, -1.342714e-002, -5.028103e-003, 7.563166e-003, 2.577901e-003, -1.138437e-002, 1.272752e-002, 2.644436e-003, -1.069105e-002, -5.017704e-003, 3.903235e-003, 1.722902e-002, 1.681918e-003, -3.100364e-004, -7.287168e-003, -2.849540e-003, 1.434178e-002, -8.269038e-003, -1.279651e-002, -1.827728e-003, 7.411193e-003, 2.176877e-002, 1.841007e-002, 1.319013e-002, -5.329378e-003, -5.510904e-004, 9.357442e-003, -1.859439e-002, -1.694596e-002, 3.382782e-003, 9.930060e-003, 6.795771e-003, 5.319313e-003, 9.071627e-003, 1.482496e-002, 1.630682e-002, 5.849168e-003, -1.030228e-002, -2.254716e-002, -2.255994e-002, -6.277871e-003, 1.317639e-002, 2.786779e-002, 3.537755e-002, 2.753850e-002, 7.902533e-003, -8.715846e-003, -5.008568e-003, 5.634832e-003, 7.083527e-003, -3.692196e-003, -4.383567e-003, 2.195364e-002, 1.664575e-002, -2.398170e-003, -1.698212e-003, 9.271264e-003, 8.661691e-003, -

© ISO/IEC 2004 — All rights reserved


Copyright International Organization for Standardization
Provided by IHS under license with ISO
No reproduction or networking permitted without license from IHS
Not for Resale

3.410878e-003, 4.841249e-003, -6.159253e-003, -1.986102e-003, 2.071597e-002, -1.035463e-002, -1.188519e-002, -2.433982e-003, 1.036333e-002, 1.862874e-002, 1.326369e-002, 8.597806e-003, 2.256903e-003, 3.982205e-003, 3.359766e-003, -2.336882e-002, -2.570370e-002, 9.664648e-004, 1.585052e-002, 1.191318e-002, 1.039113e-002, 9.872623e-003, 1.039628e-002, 7.932206e-003, -7.761393e-003, -2.423130e-002, -3.640277e-002, -3.886805e-002, -1.751286e-002, 7.994320e-003, 2.358147e-002, 2.458153e-002, 1.303949e-002, -1.635747e-003, -6.723879e-003, -9.892171e-004, 6.257024e-003, 2.368032e-003, -5.095290e-003, 5.876514e-003, 2.596065e-002, 2.228204e-002, 8.159882e-003, 1.066937e-002, 1.400523e-002, 5.161455e-003, -1.705508e-003, 1.707315e-002, 4.776575e-003, 1.920060e-003, 1.704989e-002, -1.672949e-002, -1.003402e-002, -4.802425e-004, 6.528408e-003, -2.739368e-003, -1.169988e-002, -2.063496e-003, 4.680755e-003, -6.401479e-003, 9.257734e-003, -1.540485e-002, -2.174507e-002, -3.898736e-003, 1.881214e-002, 1.634859e-002, 9.957912e-003, 1.106169e-002, 1.186354e-002, 1.125819e-003, -1.625011e-002, -3.092079e-002, -3.642045e-002, -3.383754e-002, -2.110359e-002, -1.097118e-004, 1.353888e-002, 1.361854e-002, 4.986248e-003, -6.420357e-003, -4.823585e-003, -6.806536e-003, -8.996095e-003, -7.319849e-003, 9.756335e-005, 8.199291e-003, 1.775739e-002, 3.560956e-003, -7.730825e-003, 4.842820e-003, 1.375271e-002, 1.547083e-003, -3.835684e-003, 2.426283e-002, 1.178734e-002, 6.710296e-003, 1.644628e-002, -1.295555e-002, -5.933362e-003, -6.137743e-004, -1.368621e-002, -3.355899e-002, -2.825296e-002, -1.395829e-002, 4.142344e-003, -6.237915e-003, 1.309208e-002, -9.458767e-003, -2.313839e-002, -1.011369e-002, 1.554423e-003, 5.848989e-004, -6.025775e-003, -3.459324e-003, 1.324743e-003, -5.922062e-003, -2.110511e-002, -3.416752e-002, -3.811761e-002, -3.334456e-002, -2.144419e-002, -1.090816e-002, -2.192883e-003, -1.197236e-003, -9.120341e-003, -1.398708e-002, -1.695277e-002, -1.863741e-002, -2.338408e-002, -1.796589e-002, 1.558554e-003, 1.850639e-003, 9.604744e-003, -9.579872e-003, -3.299838e-002, -1.939670e-002, -4.766057e-004, -1.279959e-002, -1.922872e-002, 9.812837e-003, 8.538181e-003, 5.323212e-003, 3.127293e-002, 4.742014e-003, 1.006171e-002, 1.436085e-002, 2.314029e-003, -9.413364e-003, 5.402179e-004, 1.687828e-002, 3.737516e-002, 1.186817e-002, 1.876707e-002, 8.524789e-003, 5.640251e-004, 7.799940e-003, 1.990639e-002, 8.895524e-003, -3.850828e-003, -2.842824e-003, 8.526872e-003, 9.114005e-003, -1.877722e-004, -9.068996e-003, -1.319790e-002, -1.320504e-002, -8.536429e-003, -3.807570e-003, 3.844766e-004, 5.689333e-003, 3.540434e-003, -1.929647e-003, -5.336884e-003, -9.474314e-003, -1.027495e-002, -1.097163e-003, -2.651419e-003, -6.556715e-003, 4.348902e-003, -1.413657e-002, -3.175012e-002, -2.059252e-002, 3.578424e-004, -3.411162e-003, -1.333958e-002, -1.421002e-002, -2.032463e-002, -1.635369e-002, 1.565241e-002, -9.951210e-003, 2.090627e-003, 1.406744e-002, 1.651219e-002, -1.749573e-004, 6.410405e-004, 1.775768e-002, 1.782862e-002, -1.365241e-002, -1.278171e-002, -7.734690e-003, -4.121723e-003, -1.186628e-003, 8.457521e-003, 2.503525e-003, -1.754920e-002, -2.077655e-002, -1.418052e-002, -4.946304e-003, -3.526587e-003, -5.934776e-003, -1.015398e-002, -1.687550e-002, -1.958970e-002, -1.989545e-002, -1.515828e-002, -6.093677e-003, 2.070213e-002, 1.082602e-002, 4.216352e-004, 4.438646e-003, 7.926950e-003, 1.400519e-002, 6.743436e-003, -2.484295e-003, 1.783368e-002, 5.701843e-003, -2.401189e-002, -2.054753e-002, 4.969990e-003, 1.366899e-002, 1.528165e-002, 8.361698e-003, -1.215316e-002, -1.582788e-002, 2.276802e-003, -5.331759e-003, -5.468661e-004, 2.430466e-002, 1.485774e-002, -5.276062e-003, -1.241485e-002, -1.877495e-003, -4.190900e-003, -3.229096e-002, -2.084281e-002, 1.229742e-004, 9.385948e-004, -3.751721e-003, 1.857316e-003, 3.039842e-003, -6.360626e-003, -1.043797e-002, -7.109228e-003, -1.446022e-003, 6.504407e-003, 1.344559e-002, 1.677147e-002, 1.535793e-002, 1.015338e-002, 8.880560e-003, 1.291243e-002, 1.303545e-002, 9.242034e-003, -2.051727e-003, -6.749256e-003, 3.423896e-003, 9.331980e-003, 2.142645e-003, -9.450709e-003, -2.362375e-002, -4.327158e-003, -1.324909e-003, -1.475545e-002, -2.192438e-002, -4.239840e-003, 3.487434e-003, 1.182796e-002, 6.960964e-003, 3.580579e-003, -1.141064e-002, 4.924394e-003, -1.004198e-003, -1.061967e-003, 1.442495e-002, 1.242402e-003, -1.060791e-002, -1.960739e-002, -3.936026e-003, -4.742606e-003, -2.332809e-002, -1.281565e-002, 1.013118e-002, 4.820020e-005, -1.397102e-002, -6.637251e-003, -3.488590e-003, -6.231961e-003, -9.667501e-003, -1.124903e-002, -1.174168e-002, -7.568481e-003, -1.810503e-004, 4.595740e-003, 4.687755e-003, 2.749392e-003, 1.543429e-004, -4.043115e-003, -6.274061e-003, -8.285962e-003, -8.273745e-003, -7.660267e-004, 8.163849e-003, 9.985836e-003, 4.548448e-004, -9.054047e-003, -2.970496e-002, -2.046819e-002, 4.016917e-003, 4.041973e-003, -3.164562e-003, 9.337199e-003, 6.635645e-003, 1.502041e-003, 5.209457e-003, 2.033910e-002, 6.095506e-003, -6.468733e-003, -1.059098e-002, -1.228038e-002, 1.167645e-002, 2.213162e-003, -7.207364e-003, 7.581436e-003, 3.566738e-002, 2.640247e-002, 8.062225e-003, 9.532892e-003, 3.220670e-002, 1.738386e-002, 1.196666e-003, 6.209687e-003, 1.653064e-002, 9.937241e-003, 6.958146e-003, 2.751576e-003, -1.017567e-003, -3.929432e-003, -7.295352e-003, -8.242301e-003, -4.705665e-003, -4.013415e-003, -6.104323e-003, -8.485230e-003, -1.258313e-002, -1.164166e-002, -5.139706e-003, 7.319006e-003, 1.820881e-002, 1.634015e-002, 5.861029e-003, 5.579412e-003, -1.280076e-002, -1.380644e-002, 1.353025e-002, 2.177960e-002, 7.615003e-003, 1.291137e-002, 1.508877e-002, 1.865389e-003, -2.981375e-003, 1.182723e-002, 1.344561e-002, -1.830605e-003, -5.347949e-003, -1.014216e-002, 2.464032e-003, 2.607326e-003, 2.817168e-003, 2.064770e-002, 3.138754e-002, 4.624329e-003, -7.412999e-003, -3.558630e-003, 1.185449e-002,


© ISO/IEC 2004 — All rights reserved

Copyright International Organization for Standardization
Provided by IHS under license with ISO
No reproduction or networking permitted without license from IHS
Not for Resale

9.047403e-003, -6.304562e-003, -2.515319e-003, 1.231607e-002, 1.371369e-002, 7.059533e-003, 5.944380e-003, 2.707002e-003, 2.652181e-003, 4.756131e-004, 1.822005e-003, 2.887494e-003, 7.043548e-003, 8.358534e-003, 5.047894e-003, 7.991173e-004, -8.925030e-004, 1.178280e-003, 9.533942e-003, 1.553657e-002, 9.161511e-003, -2.902014e-003, 4.339295e-003, -3.867763e-003, -1.060578e-002, 4.260632e-003, 1.164735e-002, -1.207843e-002, -1.839720e-002, -1.273974e-002, -1.632868e-002, -3.191100e-002, -2.698632e-002, -2.205482e-002, -8.715421e-003, -9.444410e-004, 1.841513e-004, -2.810012e-003, -1.459556e-002, -1.415847e-002, -4.190218e-003, 7.028110e-005, -1.762426e-002, -3.208106e-002, -1.486215e-002, 5.576560e-003, 3.688024e-003, 9.221668e-004, -2.075718e-003, 1.104908e-002, 1.588399e-002, 1.668710e-002, 1.071572e-002, 4.769854e-003, 2.639630e-003, 3.505937e-003, 2.483629e-003, 4.268456e-003, 6.121570e-003, 3.217705e-003, -4.466981e-004, -7.787026e-003, -1.216734e-002, -1.474506e-002, -8.657700e-003, -2.116532e-003, -1.190285e-002, 8.428520e-003, 2.114720e-002, 1.823310e-002, 3.730485e-003, 1.505091e-002, 2.216055e-002, -3.809889e-003, -8.056807e-003, -8.958860e-004, 7.026487e-004, -5.772411e-003, 4.981865e-003, 4.307896e-003},
{1.112417e-002, 1.039212e-002, 5.565631e-003, -9.089318e-003, -1.565277e-002, -1.681871e-002, -1.855007e-002, -2.487732e-002, -2.449777e-002, -1.560103e-002, 3.609411e-003, 1.753611e-002, 2.616320e-002, 2.569460e-002, 1.511345e-002, 4.025900e-003, -4.602136e-003, -1.047057e-002, -8.410174e-003, -1.311260e-002, -1.943374e-002, -1.922476e-002, -2.116258e-002, -2.102168e-002, -1.573059e-002, -8.910977e-003, -1.453966e-004, -1.986060e-003, -5.039022e-003, -4.717171e-003, 3.727769e-003, 1.446418e-002, 1.684698e-002, -3.240380e-004, -1.657596e-002, -3.662461e-003, 1.913498e-002, 2.769052e-002, 2.256435e-002, 2.083805e-003, -1.325357e-002, -3.204363e-002, -4.025395e-002, -7.640371e-003, -2.220774e-003, -1.974410e-003, 1.755717e-002, 1.907517e-002, 1.160306e-002, 4.073316e-004, 6.964973e-004, -4.739015e-004, -1.762565e-003, -1.503292e-002, -1.758069e-002, 1.573822e-004, 1.200913e-002, 1.531997e-002, 1.717566e-002, 1.649949e-002, 1.253787e-002, 5.192205e-003, 6.942297e-004, 1.619715e-003, 8.218430e-004, -6.408150e-003, -1.082312e-002, -1.375276e-002, -1.079553e-002, -8.002902e-003, 2.704108e-003, 1.432553e-002, 2.308741e-002, 3.040831e-002, 2.966788e-002, 2.119981e-002, 1.343384e-002, 1.639111e-002, 2.423358e-002, 2.224142e-002, 5.033745e-003, -1.426143e-002, -5.195195e-003, 9.372771e-003, 2.478130e-002, 1.567582e-002, 1.338466e-002, 1.767574e-002, 7.846328e-003, 7.055320e-003, 1.170132e-002, 9.049850e-004, 1.899791e-002, 1.558271e-002, 8.442410e-003, 1.398014e-003, 9.036423e-003, 6.055200e-003, 6.091427e-005, -1.077883e-002, -1.527464e-002, -9.376564e-003, -4.964737e-003, -1.512524e-002, -1.499840e-002, -1.801781e-002, -1.698420e-002, -1.193304e-002, -3.487364e-003, -6.430186e-003, -1.829429e-002, -3.157832e-002, -4.114676e-002, -4.076884e-002, -3.915219e-002, -3.553883e-002, -2.610227e-002, -1.098069e-002, 2.660593e-003, 1.642160e-002, 2.572880e-002, 2.490926e-002, 1.095437e-002, -1.763972e-003, -7.012905e-003, -3.023531e-003, 1.711123e-003, -1.202387e-002, -2.784596e-002, -1.655944e-002, 4.719201e-003, -2.509891e-003, -1.636768e-002, 3.351558e-003, 1.573136e-002, 1.129810e-002, 1.617467e-002, 4.889791e-004, 1.831726e-002, 1.197863e-002, 4.218889e-003, 5.313646e-003, 9.903585e-003, 8.779193e-003, 7.323226e-003, 6.290182e-004, 4.948438e-004, 3.634775e-003, -5.376504e-004, -1.184705e-002, -1.696501e-002, -1.290019e-002, 9.665265e-004, 9.694163e-003, 9.206022e-003, 3.913120e-004, -1.272510e-002, -2.268645e-002, -2.904483e-002, -2.621882e-002, -2.467371e-002, -2.568626e-002, -2.131271e-002, -1.190871e-002, 1.150190e-003, 1.654126e-002, 3.026867e-002, 3.516015e-002, 2.879228e-002, 7.540334e-003, -9.203160e-003, -1.170207e-002, -3.951970e-003, -1.482328e-003, -1.806291e-002, -2.308419e-002, 4.057947e-003, 1.156508e-002, -2.253281e-002, -2.576530e-002, -1.238578e-003, 1.240296e-002, 1.043751e-002, -3.028844e-003, 1.739347e-002, 1.477930e-002, 8.768788e-003, 1.385141e-002, 1.494445e-002, 1.968152e-002, 2.317024e-002, 1.973774e-002, 2.943488e-002, 2.729914e-002, 1.274672e-002, -1.923098e-003, 5.490788e-003, 1.575347e-002, 2.257054e-002, 1.842779e-002, 1.110471e-002, 5.178065e-003, 1.202408e-003, -6.202418e-004, -4.686060e-003, -8.402003e-003, -9.521808e-003, -1.688954e-002, -1.610379e-002, -1.264496e-002, -1.534628e-003, 7.633550e-003, 1.640628e-002, 2.199429e-002, 2.024807e-002, 8.578070e-003, -1.585677e-002, -2.969724e-002, -2.580195e-002, -1.890027e-002, -2.034942e-002, -2.641063e-002, -1.934970e-002, 1.505042e-002, -6.621091e-003, -4.821618e-002, -2.019570e-002, 4.055898e-003, 1.753969e-002, -5.097857e-003, 1.300307e-002, 5.844218e-003, 3.380387e-003, 1.300753e-002, 1.914730e-004, 3.259606e-003, 1.198693e-002, 1.316392e-002, 1.245750e-002, 8.694100e-003, -1.095372e-002, -9.677048e-003, 7.386225e-003, 1.314751e-002, 1.266531e-002, 5.376666e-003, -1.691053e-003, 1.865800e-003, 4.603449e-003, 3.333876e-003, 3.437431e-003, 3.726315e-003, 7.767037e-004, -7.522843e-003, -1.200405e-002, -1.096640e-002, -3.640410e-003, 2.135180e-003, -1.596803e-003, -6.020072e-003, -5.629966e-003, -9.276168e-003, -1.500141e-002, -2.805026e-002, -3.271231e-002, -1.693168e-002, -1.084856e-002, -1.050849e-002, -1.388153e-002, 1.614985e-002, 2.340990e-002, -1.867198e-002, -2.191736e-002, -6.742392e-003, 2.245832e-002, 1.673249e-003, 7.584802e-003, -3.784740e-003, -2.050583e-003, -4.294832e-003, -1.393898e-002, 2.515328e-003, 5.710803e-003, -1.526457e-003, 6.159091e-003, 2.772221e-003, -6.521869e-003, -3.627325e-003, 1.061921e-002, 1.386134e-002, 1.199514e-002, 8.261569e-003, 6.650203e-003, 9.080644e-003, 1.058780e-002, 1.184265e-002, 1.019066e-002, 6.793086e-003, 5.922023e-003, 3.515851e-003, 3.859463e-003, 9.845576e-003, 1.982301e-002, 2.256978e-002,

© ISO/IEC 2004 — All rights reserved


Copyright International Organization for Standardization
Provided by IHS under license with ISO
No reproduction or networking permitted without license from IHS
Not for Resale

1.768647e-002, 2.809120e-003, -8.639995e-003, -1.464889e-002, -1.827228e-002, -1.909522e-002, -2.508952e-002, -8.597515e-003, 7.188950e-003, 6.469858e-003, -1.237264e-003, 1.604013e-002, 3.455435e-002, 9.589038e-003, -2.392129e-002, -1.030014e-002, 1.983096e-002, 5.483062e-003, 1.259310e-003, -8.759927e-003, -8.107101e-003, -1.357690e-002, -1.890131e-002, 3.826398e-003, -5.635536e-003, -1.825909e-002, 1.853031e-003, 4.498516e-003, -7.368719e-003, -6.641744e-003, 3.618189e-003, 7.251765e-003, 8.381361e-003, 7.539510e-003, 2.622014e-003, 1.673410e-003, -1.199148e-003, -8.578003e-004, -1.366072e-003, 1.293985e-003, -2.644780e-003, 8.820737e-004, 1.034130e-002, 2.403619e-002, 3.788315e-002, 4.487623e-002, 3.784353e-002, 2.848181e-002, 1.519760e-002, -6.484429e-004, -1.228088e-002, -1.575563e-002, -9.768038e-003, 4.406712e-004, 2.048682e-002, 2.739878e-002, 5.267533e-003, 1.191321e-002, 3.366061e-002, 2.422401e-002, -4.455738e-003, -5.099589e-004, 1.795742e-002, 6.074501e-003, 3.695917e-003, -1.104848e-002, -1.221069e-002, -1.336636e-002, -1.679041e-002, 3.082234e-004, -2.274406e-002, -2.080326e-002, 1.237293e-002, 8.923184e-003, -1.474894e-002, -1.122212e-002, -6.239760e-004, -1.328506e-003, -3.631909e-003, -5.996748e-003, -1.209663e-002, -1.735995e-002, -2.121533e-002, -1.938659e-002, -1.657805e-002, -1.650696e-002, -1.493154e-002, -1.076129e-002, -1.597263e-003, 1.522421e-002, 3.193420e-002, 4.892474e-002, 4.718247e-002, 3.730930e-002, 2.234120e-002, 1.003985e-002, 6.060324e-004, -6.291707e-003, -4.328131e-003, 2.069960e-003, 1.880012e-002, 3.390927e-002, 1.997788e-002, 5.340852e-004, 2.413310e-002, 2.158749e-002, 4.062604e-003, 1.793040e-002, 2.005653e-002, 2.765116e-003, 8.028334e-003, -1.622091e-002, -2.286490e-002, -1.778263e-002, -1.718829e-002, -5.702791e-003, -3.633425e-002, -1.329299e-002, 2.503533e-002, -3.613514e-003, -2.181672e-002, -9.996806e-003, -1.471657e-003, -5.081065e-003, -5.609966e-003, -3.771814e-003, -1.084012e-002, -1.937109e-002, -1.775907e-002, -1.388061e-002, -1.484767e-002, -1.681159e-002, -1.788410e-002, -1.674653e-002, -1.573533e-002, -4.828617e-003, 1.101232e-002, 2.545159e-002, 2.834027e-002, 2.409867e-002, 1.407527e-002, 5.966725e-003, 1.598261e-003, -5.951197e-003, -1.085384e-003, -6.328062e-004, 7.659702e-003, 2.338650e-002, 2.762815e-002, -8.773784e-004, 1.045528e-002, 1.323433e-002, -3.390997e-003, 2.675294e-002, 1.665389e-002, 3.479287e-003, 5.586259e-003, -2.109107e-002, -1.902367e-002, -1.165979e-002, -1.104104e-002, -1.637374e-002, -2.970453e-002, 2.479029e-003, 2.135859e-002, -1.632058e-002, -1.958337e-002, -3.997732e-003, 4.356903e-003, 6.202260e-003, 1.093955e-002, 1.218771e-002, 6.425963e-003, -3.508048e-003, -3.455297e-003, 1.811492e-003, 4.548092e-004, -4.811432e-003, -1.545649e-002, -2.218495e-002, -2.844039e-002, -2.460090e-002, -1.856065e-002, -6.733952e-003, -2.536103e-003, 5.821704e-004, 1.120927e-004, -6.996605e-003, -8.955680e-003, -9.632628e-003, -4.294427e-003, -6.449381e-004, -3.880293e-003, 2.871053e-004, 1.529760e-002, -6.096656e-004, 5.655168e-004, 5.575464e-003, -1.996172e-002, 2.158465e-002, 2.234228e-002, 1.668652e-003, 4.720425e-003, -1.824196e-002, -7.642247e-003, -1.057774e-003, -9.562547e-004, -1.339159e-002, -1.239556e-002, 1.750227e-002, 9.917786e-003, -2.140160e-002, -1.304379e-002, 8.838165e-003, 1.406685e-002, 1.442683e-002, 1.968378e-002, 2.193592e-002, 1.498270e-002, 8.196157e-003, 9.245735e-003, 1.337364e-002, 1.312575e-002, 6.924504e-003, -8.101331e-003, -2.425390e-002, -3.731646e-002, -4.115141e-002, -4.036408e-002, -3.069836e-002, -2.125705e-002, -1.775550e-002, -1.504983e-002, -2.017512e-002, -1.966980e-002, -1.687338e-002, -9.881824e-003, -7.099019e-003, -5.076818e-003, -1.177075e-002, -4.537133e-003, -8.727741e-003, -6.640606e-003, 3.749468e-003, -3.060571e-002, 4.257257e-003, 1.871329e-002, -1.833277e-003, 5.862658e-003, -1.328058e-002, 5.082312e-003, -3.902012e-003, 1.077752e-002, 4.592209e-003, 7.236228e-003, 2.347021e-002, 9.203036e-004, -1.657362e-002, 1.368888e-003, 1.435236e-002, 4.999644e-003, 6.605013e-003, 1.763857e-002, 2.769996e-002, 2.447530e-002, 2.291833e-002, 2.323972e-002, 2.551016e-002, 2.302909e-002, 1.582575e-002, 4.939113e-004, -2.128451e-002, -3.846637e-002, -5.533238e-002, -5.880889e-002, -4.748458e-002, -3.182993e-002, -2.284429e-002, -2.332351e-002, -2.130287e-002, -1.909001e-002, -1.828443e-002, -1.420035e-002, -5.724289e-003, -3.626371e-003, -1.204123e-002, -1.301125e-002, -1.646477e-002, -1.249228e-002, 1.185706e-002, -2.873531e-002, -2.028926e-002, 1.146850e-002, -3.921794e-003, 6.366089e-003, -7.476244e-004, 1.419456e-002, 4.162925e-003, 2.213147e-002, 2.029805e-002, 1.640533e-002, 1.403134e-002, -4.522025e-003, -9.260368e-003, 6.884141e-003, 7.739343e-004, -1.572327e-002, -1.033088e-002, 7.328415e-003, 2.419590e-002, 2.791368e-002, 2.719473e-002, 2.758533e-002, 3.184699e-002, 2.922817e-002, 1.544385e-002, 3.632948e-003, -1.513834e-002, -3.371812e-002, -5.451863e-002, -6.157433e-002, -5.517633e-002, -3.646139e-002, -1.918978e-002, -1.481954e-002, -7.098410e-003, -1.197030e-003, -1.125193e-003, -1.866379e-003, 1.251980e-004, -5.015089e-004, -5.006132e-003, -8.875625e-003, -1.856452e-002, -1.423932e-002, 1.565692e-002, -1.687287e-002, -3.100474e-002, -5.665519e-003, -1.456197e-002, 4.903179e-003, 1.266621e-002, 1.723070e-002, 6.951182e-003, 3.518613e-002, 2.480773e-002, 1.337870e-002, 5.180689e-003, -1.061127e-002, -4.238463e-003, 2.999251e-003, -2.186783e-002, -3.449236e-002, -1.875465e-002, 1.171969e-003, 1.855723e-002, 2.488900e-002, 2.634903e-002, 2.561558e-002, 2.753411e-002, 2.269090e-002, 9.655431e-003, 3.715028e-003, -1.058381e-002, -2.454001e-002, -3.924826e-002, -4.649143e-002, -3.840897e-002, -2.270729e-002, -4.853534e-003, 5.295916e-003, 1.273359e-002, 2.251641e-002, 2.086393e-002, 1.490672e-002, 1.646077e-002, 9.631397e-003, 2.979505e-003, -5.115641e-003, -1.741814e-002, -1.709609e-002, 1.620075e-002, -1.984680e-003, -4.700002e-002, -


© ISO/IEC 2004 — All rights reserved

Copyright International Organization for Standardization
Provided by IHS under license with ISO
No reproduction or networking permitted without license from IHS
Not for Resale

1.710560e-002, -2.181727e-002, 1.052649e-002, 1.678841e-002, 1.510562e-002, 6.562260e-004, 3.597879e-002, 1.948275e-002, 2.501839e-003, 3.511932e-003, -1.104258e-002, -4.642762e-004, -2.690808e-003, -4.271358e-002, -4.846379e-002, -2.624187e-002, -5.588837e-003, 8.542891e-003, 1.705960e-002, 2.074375e-002, 2.219955e-002, 2.010401e-002, 1.384664e-002, 7.928549e-003, 2.364414e-003, -6.558743e-003, -1.495595e-002, -2.083838e-002, -2.443105e-002, -9.797857e-003, 1.980364e-003, 1.530424e-002, 2.705286e-002, 3.581425e-002, 4.588590e-002, 4.299845e-002, 3.206944e-002, 2.695681e-002, 2.048878e-002, 9.129643e-003, 3.662283e-003, -6.474197e-003, -1.434338e-002, 2.078458e-002, 1.027508e-002, -3.558669e-002, -1.301651e-002, -2.803643e-002, 1.225646e-002, 1.952411e-002, 1.055442e-002, -1.108235e-002, 2.972750e-002, 1.578222e-002, -5.419801e-003, -1.287459e-003, -9.137751e-003, 3.325273e-003, -8.691320e-003, -5.244907e-002, -5.895273e-002, -3.723511e-002, -1.616782e-002, 1.792240e-004, 1.427111e-002, 2.331802e-002, 2.781406e-002, 1.830019e-002, 7.571881e-003, 5.180043e-003, -1.345542e-003, -6.631153e-003, -7.934246e-003, -8.931788e-003, -6.422094e-003, 7.353882e-003, 2.186605e-002, 3.237020e-002, 3.762624e-002, 4.519158e-002, 4.780008e-002, 4.329050e-002, 3.348037e-002, 2.352384e-002, 2.073752e-002, 5.862135e-003, 6.043195e-003, 5.897298e-003, 7.469590e-004, 2.101021e-002, 1.730445e-002, -1.629672e-002, -1.324111e-003, -2.590948e-002, 8.411887e-003, 1.746866e-002, 1.139679e-002, -1.710857e-002, 2.586860e-002, 1.075038e-002, -7.666155e-003, -6.416078e-004, -3.776850e-003, 7.520492e-003, -7.734481e-003, -4.915346e-002, -6.399333e-002, -5.354929e-002, -4.379215e-002, -2.583190e-002, -3.199878e-004, 2.220467e-002, 3.666019e-002, 3.284234e-002, 1.791077e-002, 1.376132e-002, 5.889198e-003, -1.969203e-004, -2.306238e-003, 6.717194e-004, 4.962220e-003, 1.098281e-002, 2.126024e-002, 2.519135e-002, 2.356776e-002, 2.402794e-002, 2.559941e-002, 2.825871e-002, 2.538613e-002, 9.595233e-003, 9.640608e-003, 3.638447e-004, 2.778304e-003, 1.258801e-002, 1.457719e-002, 1.803625e-002, 1.665892e-002, 2.014116e-003, 1.593386e-002, -1.945906e-002, 5.466791e-003, 1.430863e-002, 8.925223e-003, -2.141796e-002, 1.569635e-002, 5.353331e-004, -5.084648e-003, 8.773742e-003, -1.885465e-003, 1.143746e-002, 1.105085e-002, -1.623412e-002, -4.115659e-002, -5.698461e-002, -6.500787e-002, -5.764804e-002, -3.082610e-002, 5.275407e-003, 3.770772e-002, 4.868213e-002, 3.907298e-002, 2.620067e-002, 1.352596e-002, 8.951178e-003, 6.161543e-003, 1.016857e-002, 8.455025e-003, 1.711235e-003, 4.406985e-004, -3.866875e-003, -9.772083e-003, -1.500383e-002, -1.271731e-002, -1.311533e-003, 8.553142e-003, 4.972032e-004, 3.354852e-005, -4.131984e-003, -3.938574e-003, 1.247122e-002, 1.809643e-002, 5.792935e-003, 6.868252e-003, 5.381117e-003, 3.190892e-002, -1.670716e-002, -8.376074e-003, 7.783856e-003, 6.722574e-003, -2.203861e-002, -5.707324e-004, -1.266886e-002, -2.264396e-003, 7.170406e-003, -5.462058e-004, 3.512479e-002, 5.237945e-002, 2.072442e-002, -1.400250e-002, -2.622020e-002, -3.228422e-002, -2.998995e-002, -1.331100e-002, 1.788559e-002, 4.874119e-002, 6.999189e-002, 6.581391e-002, 3.873494e-002, 1.468444e-002, 9.862165e-003, 1.386542e-002, 1.810241e-002, 2.412757e-002, 2.282000e-002, 1.395606e-002, 2.563244e-003, -1.545031e-002, -2.989111e-002, -3.871729e-002, -2.642218e-002, -3.921865e-003, 5.433464e-003, 8.834592e-003, -4.270249e-003, -9.574717e-003, 9.054463e-003, 1.000296e-002, -1.489790e-002, -1.669848e-002, -5.049179e-003, 3.754246e-002, -1.339101e-002, -2.147611e-002, 3.629327e-003, -6.680147e-003, -1.029250e-002, -8.577227e-003, -1.520801e-002, -3.671297e-003, 2.779966e-003, 2.842953e-003, 5.677371e-002, 6.123328e-002, 5.002340e-003, -2.192474e-002, -8.050581e-003, 4.265447e-003, 1.173500e-002, 2.017119e-002, 3.419893e-002, 5.243119e-002, 6.933260e-002, 7.192950e-002, 4.237036e-002, 1.181222e-002, 2.064598e-003, 6.816150e-003, 2.346272e-002, 4.167422e-002, 3.896347e-002, 2.127952e-002, 3.473497e-003, -1.581003e-002, -3.875667e-002, -5.167908e-002, -5.658154e-002, -4.356581e-002, -1.207616e-002, 2.433623e-002, 1.512887e-002, -1.334666e-002, 3.508398e-003, -7.654924e-003, -2.912718e-002, -3.326490e-002, -2.050486e-002, 3.217536e-002, -3.514215e-003, -1.236548e-002, 6.360079e-003, -4.989755e-003, 1.224586e-003, -5.177073e-003, -1.452314e-002, -3.111904e-003, -3.627730e-004, -3.087153e-004, 3.786064e-002, 3.892530e-002, -1.566952e-003, -3.079336e-003, 2.389034e-002, 4.044736e-002, 4.456441e-002, 4.824738e-002, 4.965775e-002, 3.064824e-002, 2.566980e-002, 3.530798e-002, 1.885359e-002, -8.905125e-003, -1.925207e-002, -1.502970e-002, 9.635009e-003, 2.763987e-002, 1.723154e-002, 2.226925e-003, -7.767434e-004, -1.308476e-004, -5.137351e-003, -1.023824e-002, -2.705384e-002, -4.394344e-002, -3.567612e-002, 2.840083e-003, 1.731898e-002, -1.374068e-002, -9.352974e-003, -2.783977e-002, -2.783046e-002, -3.107575e-002, -2.329480e-002, 2.763466e-002, -4.676013e-004, -1.713990e-002, 9.424506e-003, -7.549699e-004, 6.403733e-003, -5.464364e-003, -1.270282e-002, -1.089346e-002, -1.434874e-002, -2.777928e-002, -1.194119e-002, 6.461452e-003, 2.706572e-003, 1.341846e-002, 1.906918e-002, 1.027754e-002, 7.343934e-003, 1.408763e-002, 2.732593e-002, 2.273176e-002, -1.775626e-005, -6.902273e-003, -8.400767e-003, -4.024763e-002, -5.512087e-002, -4.702204e-002, -9.920844e-003, 2.587430e-004, -7.833160e-003, -3.473747e-002, -4.909073e-002, -4.251894e-002, -2.790184e-002, -2.058980e-002, -9.825211e-003, -2.000219e-002, -4.392008e-002, -2.526773e-002, 3.842644e-003, -1.698449e-002, -2.023049e-002, -2.873968e-002, -1.718116e-002, -2.114407e-002, -1.858093e-002, 9.514428e-003, 6.031341e-003, -1.844485e-002, 1.183298e-002, 2.920250e-003, 9.416770e-003, -1.983653e-003, -4.233891e-003, -1.068029e-002, -2.278047e-002, -4.364386e-002, -4.854460e-002, -1.733836e-002, 1.387063e-003, 4.844651e-003, -1.046022e-002,

© ISO/IEC 2004 — All rights reserved


Copyright International Organization for Standardization
Provided by IHS under license with ISO
No reproduction or networking permitted without license from IHS
Not for Resale

1.002490e-002, 1.411423e-002, 1.619763e-002, -6.310516e-003, -1.784111e-002, -1.428868e-002, -4.620732e-003, 3.776143e-004, -3.567365e-002, -5.099737e-002, -4.973209e-002, -6.991795e-003, -3.247336e-003, -1.395784e-002, -4.968930e-002, -5.233974e-002, -6.948786e-003, 1.296319e-002, -2.050346e-002, -6.890530e-003, -1.192225e-002, -4.096675e-002, -4.340322e-002, -4.737012e-003, -2.158017e-002, -2.176591e-002, -1.878231e-002, 3.202941e-005, 8.097035e-003, 4.306654e-003, 1.219084e-002, 1.279125e-002, 9.709400e-003, 1.523904e-002, 1.145628e-002, 1.835734e-002, 1.039217e-002, 1.224176e-002, 6.068995e-003, -2.913766e-003, -1.284553e-002, -2.470645e-002, -5.268224e-003, 1.407448e-002, 6.168535e-003, -1.023812e-002, -4.851822e-003, -2.098575e-002, -1.578230e-002, -2.831538e-002, -3.770341e-002, -5.929454e-003, 4.043558e-003, -4.852901e-003, -3.409917e-002, -4.328158e-002, -4.010751e-002, -1.934673e-003, 8.550512e-003, 4.857301e-003, -9.468648e-003, -1.421873e-002, 2.661720e-002, 5.008761e-002, 7.658613e-003, 1.505325e-002, 1.721215e-002, -2.624589e-002, -2.865776e-002, 1.849087e-003, -9.724723e-003, -6.833073e-003, 1.402799e-002, 2.372218e-002, 3.035914e-002, 1.019054e-002, 1.228412e-002, 6.404883e-003, 1.368819e-002, 1.439365e-002, 1.677716e-002, 1.720414e-002, 7.811408e-003, 1.113003e-002, 1.659848e-002, 1.408574e-002, 2.222467e-002, 4.265386e-003, 1.083361e-002, 2.406129e-002, 2.826955e-002, 2.513834e-002, 1.925059e-002, 7.947043e-003, -1.181935e-003, -3.473578e-003, -1.099943e-002, -6.073539e-004, 7.374355e-003, -5.250722e-003, -1.541116e-002, -2.252932e-002, -2.907035e-002, -1.817354e-002, 1.312586e-002, 2.235596e-002, 3.126065e-002, 3.600447e-002, 4.391787e-002, 4.301498e-002, 3.174478e-002, 3.382784e-002, 3.148946e-002, 4.738077e-003, -2.764996e-003, 8.009635e-003, -7.556670e-003, 7.189229e-004, 2.914266e-002, 2.992653e-002, 2.438720e-002, 3.828358e-003, 5.106642e-003, -1.359323e-003, 7.865164e-003, 7.165117e-003, 2.032397e-002, 9.889243e-003, 5.041558e-003, 1.466404e-002, 1.709077e-002, 1.733008e-002, 3.089335e-002, 2.255035e-002, 2.482378e-002, 2.914262e-002, 1.507743e-002, 6.763157e-003, 1.037693e-002, 9.418957e-003, 2.934549e-003, 4.889025e-003, 9.794265e-003, 1.904006e-002, 1.245731e-002, -6.441368e-003, 3.585262e-003, 2.047883e-004, -1.240573e-002, -2.361572e-002, -4.775762e-004, 2.122271e-002, 3.886889e-002, 4.400174e-002, 4.720756e-002, 4.297762e-002, 2.928208e-002, 2.140349e-002, 1.914971e-002, 1.150236e-002, 1.115149e-002, 1.056951e-002, 1.908553e-003, 5.937395e-003, 2.671920e-002, 1.226128e-002, 4.548884e-003, -3.747704e-004, 4.450691e-003, -1.723062e-003, -2.144159e-004, -8.424425e-003, 1.635815e-002, 6.886738e-005, -5.623282e-003, 1.611619e-002, 1.729178e-002, 1.601598e-002, 2.925999e-002, 2.880325e-002, 3.063921e-002, 3.053940e-002, 4.842852e-003, -1.509857e-002, -1.753137e-002, -1.618147e-002, -1.447098e-002, -1.469805e-003, 1.529343e-002, 1.995970e-002, 1.131441e-004, -5.178166e-003, 1.488849e-002, 1.593186e-002, 5.203042e-003, -1.540326e-002, -1.818024e-002, 1.304773e-002, 2.865304e-002, 2.540580e-002, 1.745886e-002, 1.153243e-002, 1.796567e-003, 9.893524e-004, 6.834959e-003, 6.724863e-003, 8.339102e-003, 1.047877e-002, 5.915778e-003, 1.319844e-002, 2.001192e-002, 1.261515e-003, -1.960609e-003, -4.303115e-003, 3.879357e-003, -9.752927e-003, -1.079840e-002, -2.505276e-002, 4.917472e-003, -8.195814e-003, -1.259044e-002, 2.014128e-002, 1.609716e-002, 1.334235e-002, 2.322580e-002, 2.660481e-002, 2.944590e-002, 2.943884e-002, 9.104973e-003, -1.070541e-002, -1.755291e-002, -1.732111e-002, -1.402703e-002, 1.082294e-003, 1.454866e-002, 5.432463e-003, -1.280341e-002, 5.752087e-003, 2.252047e-002, 2.780485e-002, 1.987811e-002, 3.719896e-004, -2.630712e-002, -1.217226e-002, 1.401104e-002, 1.723780e-002, 8.521489e-003, 3.768453e-004, -4.317902e-003, -2.116605e-003, 4.679422e-003, 5.538294e-003, 7.342880e-003, 1.091875e-002, 1.307348e-002, 1.861599e-002, 2.186545e-002, 5.358496e-003, -7.550042e-004, -2.357890e-003, -2.399345e-003, -3.510421e-002, -1.199951e-002, -3.376046e-002, -3.344487e-003, -2.094135e-002, -1.879508e-002, 1.890375e-002, 1.599126e-002, 7.717232e-003, 1.639771e-002, 1.631419e-002, 2.547858e-002, 2.634761e-002, 1.079498e-002, -6.121251e-003, -1.136955e-002, -1.112515e-002, -6.491350e-003, 3.111879e-004, -6.536120e-004, -1.166743e-002, -1.283375e-002, 1.529630e-002, 3.158353e-002, 3.727333e-002, 3.156817e-002, 1.597257e-002, -1.143347e-002, -2.917793e-002, -1.355651e-002, 3.468685e-003, 2.460445e-003, -2.602808e-004, -7.229096e-004, 2.511792e-003, 7.911338e-003, 4.746366e-003, 8.684413e-003, 1.584612e-002, 2.012718e-002, 1.685215e-002, 1.665425e-002, 6.861864e-003, -1.836204e-004, 3.544755e-003, 8.963650e-004, -3.385431e-002, -9.204755e-003, -2.850186e-002, -6.002391e-003, -2.023076e-002, -1.586393e-002, 2.484772e-002, 9.440541e-003, -1.045935e-003, 1.069209e-002, 1.096595e-002, 1.451167e-002, 1.535937e-002, 5.633244e-003, -8.914071e-003, -1.260918e-002, -1.342333e-002, -1.108227e-002, -1.237722e-002, -2.593062e-002, -2.128303e-002, 1.572645e-003, 2.196057e-002, 4.209349e-002, 4.179739e-002, 2.924431e-002, 2.068781e-002, -5.120907e-003, -3.504221e-002, -3.147711e-002, -1.997077e-002, -1.278938e-002, -1.051870e-002, -6.880718e-003, -2.079503e-003, -2.648557e-004, 1.024758e-003, 9.592628e-003, 2.400513e-002, 1.997739e-002, 9.792746e-003, 5.277620e-003, 8.179276e-003, 1.503903e-003, 6.974287e-003, 7.593652e-003, -5.115255e-002, 5.698793e-004, -2.410668e-002, -8.656847e-003, -1.393469e-002, -1.497460e-002, 2.018590e-002, -1.480931e-003, -1.147327e-002, 3.500637e-003, 6.303430e-003, 8.260035e-003, 1.084723e-002, 3.818863e-003, -5.787761e-003, -7.234131e-003, -5.920501e-003, -6.580929e-003, -2.262070e-002, -4.037501e-002, -1.581945e-002, 2.777534e-003, 7.972832e-003, 2.393678e-002, 2.320949e-002, 1.199674e-002, 1.697247e-003, -1.527635e-002, -4.909980e-002, -4.639778e-002, -2.538239e-002, -


© ISO/IEC 2004 — All rights reserved

Copyright International Organization for Standardization
Provided by IHS under license with ISO
No reproduction or networking permitted without license from IHS
Not for Resale

1.897718e-002, -1.827256e-002, -1.231802e-002, -2.939440e-003, 3.349477e-003, 7.371081e-003, 1.443328e-002, 2.674541e-002, 1.737072e-002, 2.118800e-003, -3.126144e-003, 7.270349e-003, 3.574409e-003, 1.085604e-002, 7.725689e-003, -3.587933e-002, 9.963529e-003, -1.229704e-002, -3.916928e-003, -9.888539e-004, -1.694742e-002, 2.113465e-003, -1.260854e-002, -2.202874e-002, 3.078859e-004, 1.100002e-003, 3.978843e-003, 1.172893e-002, 1.306562e-002, 6.846030e-003, 9.121827e-003, 1.421698e-002, 4.155321e-003, -3.517923e-002, -4.724090e-002, -9.743989e-003, -7.746885e-003, -1.472758e-002, 2.393877e-003, 1.329513e-002, 1.144778e-002, -4.378028e-003, -2.132884e-002, -5.321463e-002, -6.457907e-002, -2.569570e-002, -1.532696e-003, 4.555238e-003, 8.440589e-003, 1.276438e-002, 1.065585e-002, 7.559894e-003, 1.167839e-002, 2.348698e-002, 1.290659e-002, -7.203866e-003, -1.564149e-002, 4.639476e-003, 7.022211e-003, 9.411116e-003, 9.909477e-003, -2.913959e-002, 1.362248e-002, -4.558194e-003, -7.070276e-003, 8.441500e-003, -9.053810e-003, -9.464067e-003, -2.461926e-002, -2.934039e-002, -4.560918e-003, -3.207937e-003, -2.667073e-003, 7.607742e-003, 1.684015e-002, 2.018754e-002, 2.350822e-002, 1.854326e-002, -1.326908e-002, -5.667903e-002, -4.641177e-002, -2.932965e-003, 2.305721e-005, 3.338157e-003, 1.355874e-002, 1.778476e-002, 1.311675e-002, -1.211856e-003, -2.351643e-002, -5.357360e-002, -8.322719e-002, -4.781211e-002, -7.188311e-005, 2.000278e-002, 2.474048e-002, 2.182242e-002, 1.021295e-002, -4.872299e-004, 9.870462e-003, 2.219347e-002, 8.550581e-003, -1.764266e-002, -3.167365e-002, -9.350624e-004, 5.915692e-003, 3.035926e-003, 9.281465e-003, -2.123294e-002, 1.831335e-002, -5.602209e-003, -9.247607e-003, 7.592663e-003, 1.331966e-003, -5.258907e-003, -1.218557e-002, -2.676899e-002, -1.434334e-002, -8.928752e-003, -1.227476e-002, -3.452575e-003, 9.432409e-003, 2.007271e-002, 1.841537e-002, 5.860247e-004, -3.309563e-002, -5.478763e-002, -4.378174e-002, -2.142197e-002, -1.746772e-002, -1.175923e-002, -7.135403e-003, -6.862603e-003, -1.964353e-002, -3.431041e-002, -5.086117e-002, -6.127443e-002, -7.948355e-002, -7.103967e-002, -2.314347e-002, 1.487081e-002, 2.680504e-002, 1.988576e-002, 1.738211e-003, -7.789218e-003, 7.490042e-003, 1.676044e-002, 2.137701e-003, -3.338795e-002, -4.291964e-002, -5.048097e-003, 1.016553e-002, -1.897996e-003, 6.630307e-003, -2.010203e-002, 3.133385e-002, -5.393464e-003, -1.367690e-002, 1.127569e-003, 8.283358e-003, 1.314772e-002, 1.469025e-002, -4.274269e-003, -1.427910e-002, -1.358196e-002, -2.019323e-002, -2.293091e-002, -1.092596e-002, 6.801040e-003, -1.808837e-003, -2.488915e-002, -3.495186e-002, -2.982520e-002, -2.928430e-002, -4.294470e-002, -5.376060e-002, -4.609742e-002, -4.072061e-002, -4.450685e-002, -3.226356e-002, -4.219963e-002, -6.349384e-002, -5.552003e-002, -5.105037e-002, -5.444226e-002, -3.729646e-002, -3.840977e-003, 1.539005e-002, 8.591964e-003, -1.044417e-002, -1.958169e-002, -1.096933e-003, 8.392245e-003, -1.995204e-003, -3.841449e-002, -3.444411e-002, 5.633475e-003, 1.180060e-002, -2.970932e-003, 3.482070e-003, -2.160984e-002, 3.200185e-002, -1.534103e-002, -2.247479e-002, -5.362706e-003, 1.157407e-002, 2.377929e-002, 3.480629e-002, 1.509751e-002, -5.090117e-003, -7.290861e-003, -2.019287e-002, -3.707265e-002, -3.106241e-002, -8.856391e-003, -1.406620e-002, -2.358234e-002, -1.352634e-002, 3.202023e-003, 4.153064e-003, -2.071256e-002, -4.665792e-002, -5.653748e-002, -6.231136e-002, -5.461401e-002, -3.360306e-002, -2.159043e-002, -2.095656e-002, -1.089684e-002, -6.107081e-003, -1.673941e-002, -2.037789e-002, -8.195784e-003, 1.864884e-003, -8.882981e-003, -2.544965e-002, -2.925421e-002, -9.231209e-003, 6.923577e-003, 4.359521e-003, -1.977187e-002, 1.605023e-003, 1.912969e-002, 7.099464e-003, -3.997143e-004, 4.697731e-003, -1.409424e-002, 1.757091e-002, -2.792151e-002, -3.499955e-002, -1.828000e-002, 8.558331e-003, 1.337958e-002, 2.545806e-002, 1.805849e-002, 7.985270e-004, -1.489248e-004, -1.591153e-002, -4.458854e-002, -5.132435e-002, -2.653698e-002, -1.294483e-002, 2.011153e-003, 2.769779e-002, 4.712667e-002, 3.511691e-002, 8.927275e-003, -1.677017e-002, -3.362845e-002, -5.336003e-002, -4.732102e-002, -2.957593e-002, -3.898220e-003, 1.664276e-002, 3.287226e-002, 4.070085e-002, 2.959494e-002, 1.260807e-002, 4.946716e-003, -8.563492e-003, -2.837257e-002, -4.376324e-002, -4.053851e-002, -2.508776e-002, -7.973815e-004, 1.180164e-003, 2.884299e-003, 2.245125e-002, 1.099050e-002, -6.247866e-003, -6.028142e-005, 5.524428e-003, -3.440100e-003, -8.866699e-003, 4.509004e-004, -3.627063e-002, -1.860062e-002, 5.730213e-003, -2.863696e-003, -1.058340e-002, -1.466242e-002, -1.217532e-002, -7.297133e-004, -6.341093e-003, -3.855112e-002, -5.485991e-002, -3.348385e-002, 3.684918e-003, 3.387369e-002, 5.616857e-002, 5.692903e-002, 2.837455e-002, 1.363750e-003, -1.788938e-002, -3.128258e-002, -4.301071e-002, -3.190236e-002, -2.060370e-002, 2.110528e-003, 1.869170e-002, 4.010760e-002, 5.705467e-002, 5.681872e-002, 3.832511e-002, 1.352634e-002, -1.793422e-002, -4.189322e-002, -5.443882e-002, -4.324338e-002, -3.261851e-002, -1.088367e-002, -2.464712e-003, 1.164699e-002, 1.393865e-002, -1.092748e-002, -2.380810e-002, -6.535449e-003, 1.672241e-003, -3.621017e-003, -1.270286e-002, 7.689585e-003, -3.056224e-002, -1.676794e-002, 8.601561e-003, -1.551622e-002, -4.957607e-002, -3.854558e-002, -2.605434e-002, -7.238969e-003, 3.138173e-004, -2.432040e-002, -4.363714e-002, -2.967870e-002, 1.512864e-002, 3.597017e-002, 3.578806e-002, 2.971907e-002, 1.472311e-002, 2.467307e-003, -7.406368e-003, -1.654742e-002, -2.626396e-002, -2.004511e-002, -2.004330e-002, -4.343146e-003, 1.259139e-002, 3.700155e-002, 6.441930e-002, 5.976801e-002, 3.029965e-002, 2.961604e-003, -2.507125e-002, -4.417421e-002, -5.013425e-002, -3.733754e-002, -3.221508e-002, -1.823504e-002, -1.411173e-002, 1.966025e-003, -7.952899e-003, -2.390585e-002, -3.170272e-002, -3.612269e-003, -1.516785e-002, -1.913319e-003, -

© ISO/IEC 2004 — All rights reserved


Copyright International Organization for Standardization
Provided by IHS under license with ISO
No reproduction or networking permitted without license from IHS
Not for Resale

1.345580e-002, 1.430200e-002, -2.083161e-002, -1.114049e-002, 1.149198e-002, -5.598260e-003, -5.006351e-002, -4.054166e-002, -2.549425e-002, -1.195605e-002, 7.376761e-003, -5.679923e-003, -1.600071e-002, -9.588110e-003, 2.008090e-002, 2.222911e-002, 2.125993e-002, 3.542724e-002, 4.581696e-002, 3.906611e-002, 2.129731e-002, -8.831165e-003, -2.914058e-002, -2.247558e-002, -2.130116e-002, 2.453912e-003, 2.485805e-002, 5.197648e-002, 5.901308e-002, 2.736809e-002, 1.196654e-003, -9.005381e-003, -2.211221e-002, -3.426567e-002, -3.164906e-002, -2.378487e-002, -2.480576e-002, -1.447611e-002, -2.169739e-002, -1.608237e-002, -1.178827e-002, -1.413985e-002, -1.929603e-002, 4.285902e-004, -5.182950e-003, 7.682034e-003, -8.054373e-003, 2.442567e-002, -1.367063e-002, -4.114218e-003, 1.605081e-002, 1.337248e-002, -2.410311e-002, -2.278095e-002, -9.457878e-003, -1.199036e-002, 5.018060e-003, 6.107979e-003, 1.099901e-002, 1.273677e-002, 2.586097e-002, 2.450814e-002, 1.520300e-002, 1.403101e-002, 1.633556e-002, 1.255293e-002, 1.338717e-003, -1.591358e-002, -2.627544e-002, -2.078782e-002, -9.626137e-003, 1.892232e-002, 3.899233e-002, 4.881215e-002, 4.070705e-002, 7.793471e-003, -1.012951e-002, -9.386801e-004, -2.686928e-003, -8.882350e-003, -4.154108e-003, -2.372859e-003, -1.995772e-003, 1.393815e-003, -5.906262e-003, -6.702458e-003, 5.640086e-003, -1.866646e-004, -3.887721e-003, 7.509149e-004, -1.286316e-003, 1.861085e-002, 6.372354e-004, 3.156521e-002, -7.846575e-003, -4.786439e-003, 1.752558e-002, 2.733823e-002, 1.121489e-002, 6.650606e-003, 1.155321e-002, -1.201922e-002, -9.776526e-003, 1.278737e-002, 2.405341e-002, 2.770991e-002, 2.810309e-002, 1.771070e-002, -4.813300e-003, -1.577916e-002, -1.663146e-002, -1.221595e-002, -3.378327e-003, 4.184616e-003, 4.583427e-003, 9.785013e-003, 1.979377e-002, 3.374654e-002, 3.457743e-002, 2.415120e-002, 6.705793e-003, -3.549410e-003, -2.382582e-003, 1.336516e-002, 1.585509e-002, 1.539438e-002, 1.197263e-002, 7.749251e-003, 1.156011e-002, 6.307990e-003, -2.727839e-004, 6.220037e-003, 1.409972e-002, 1.217133e-002, 9.417351e-003, 1.339561e-002, 3.833064e-003, 3.132842e-002, -1.262116e-003, 3.671628e-002, 2.320934e-003, -7.734566e-003, 5.850226e-003, 2.884287e-002, 3.139244e-002, 2.605782e-002, 2.799353e-002, -1.548276e-003, -1.868124e-002, 5.355626e-003, 2.896240e-002, 3.146394e-002, 2.434170e-002, 9.215837e-003, -1.082681e-002, -2.218674e-002, -1.903521e-002, -1.059794e-002, 1.180845e-003, 1.249286e-002, 1.717466e-002, 1.855436e-002, 2.073459e-002, 2.313161e-002, 1.746690e-002, 3.195005e-003, -6.398195e-003, -3.980203e-004, 1.439952e-002, 2.940099e-002, 3.246356e-002, 3.600030e-002, 2.473800e-002, 1.280397e-002, 9.970995e-003, 1.167582e-002, 7.220643e-003, 1.460020e-002, 1.931774e-002, 1.641562e-002, 7.020025e-003, 1.294207e-002, 8.400692e-003, 3.170338e-002, -1.078481e-003, 4.386588e-002, 1.098668e-002, -1.199841e-002, -5.483664e-003, 1.977640e-002, 3.060698e-002, 3.114925e-002, 2.578575e-002, 8.098680e-003, -1.743084e-002, -1.059055e-002, 1.992470e-002, 2.855676e-002, 1.939824e-002, 2.819125e-003, -9.370879e-003, -1.435927e-002, -1.555091e-002, -7.348698e-003, 4.473141e-003, 1.499857e-002, 1.844934e-002, 1.593360e-002, 1.091610e-002, 5.480929e-004, -6.487185e-003, -8.294482e-003, -4.561083e-003, 7.968196e-003, 2.465106e-002, 3.788508e-002, 4.162654e-002, 3.753294e-002, 2.014824e-002, 8.989484e-003, -1.654471e-003, 2.381221e-003, 6.954933e-003, 1.440032e-002, 1.341037e-002, 1.209822e-002, 1.599498e-003, 5.144734e-003, -4.164047e-004, 2.169793e-002, -7.201464e-003, 4.122432e-002, 1.622811e-002, -7.263395e-003, 3.720715e-005, 1.034401e-002, 5.425978e-003, 1.215958e-002, 2.394100e-002, 1.232126e-002, -1.324644e-002, -1.547129e-002, 2.831247e-003, 2.161959e-002, 1.239241e-002, -5.165945e-004, -7.720135e-003, -5.454465e-003, -6.565990e-003, 5.138006e-004, 9.668572e-003, 2.141136e-002, 2.508692e-002, 2.374498e-002, 1.457397e-002, -6.311043e-004, -5.298142e-003, -5.492381e-003, -1.585135e-003, 1.092803e-002, 2.395441e-002, 3.564281e-002, 3.045376e-002, 1.576179e-002, 1.962651e-003, 3.868287e-003, -9.984611e-004, 1.177472e-002, 6.768654e-003, -8.756346e-004, -5.155401e-004, 2.085197e-003, -2.524885e-003, 6.349949e-004, -8.657458e-003, 1.491142e-002, -2.692766e-002, 3.125535e-002, 1.504277e-002, -4.346140e-004, 7.102657e-003, 7.621471e-003, -1.272321e-002, -1.393002e-002, 1.241177e-002, 2.598696e-002, 5.655057e-003, 7.749645e-004, -2.905313e-003, 3.824355e-003, 3.726480e-004, -1.276917e-002, -1.691083e-002, -4.000861e-003, 4.568070e-003, 1.022572e-002, 1.544147e-002, 2.282033e-002, 2.292833e-002, 2.007687e-002, 1.709586e-002, 9.362036e-003, 5.939439e-003, 5.329841e-003, 6.856577e-003, 1.505878e-002, 2.214921e-002, 1.913570e-002, 3.556498e-003, -8.991524e-003, -1.570728e-002, -1.140907e-002, 5.800019e-003, 1.946246e-002, 1.406291e-002, -2.992117e-003, -3.293639e-003, 3.132683e-003, 4.571005e-003, 4.103460e-003, -1.386533e-002, 8.394875e-003, -4.588784e-002, 1.925743e-002, 7.822589e-003, 6.853463e-004, 1.001885e-002, 7.544380e-003, -2.246413e-002, -2.750746e-002, 1.292692e-002, 2.954305e-002, 1.732729e-002, 1.281637e-002, -9.651291e-004, -5.195567e-003, -2.490595e-004, -1.496315e-002, -2.196926e-002, -1.054647e-002, 8.021065e-003, 1.271716e-002, 1.350249e-002, 1.362252e-002, 1.367029e-002, 1.824466e-002, 1.589888e-002, 1.684525e-002, 1.512367e-002, 9.871998e-003, 5.400313e-003, 4.309341e-003, 5.570920e-003, -2.389789e-004, -1.030575e-002, -1.480546e-002, -2.043955e-002, -1.506355e-002, 9.015722e-003, 1.664118e-002, 9.199660e-003, 2.895680e-003, 6.408911e-003, 1.373024e-002, 2.348359e-002, 1.811563e-002, -1.110886e-002, 4.091278e-003, -5.192771e-002, 1.522674e-002, 6.939377e-003, 4.712570e-003, 8.208388e-003, -3.166462e-003, -2.788183e-002, -2.191981e-002, 4.361119e-003, 6.851939e-003, 4.705983e-003, 4.932117e-003, 3.310685e-004, -8.463473e-003, -2.458313e-003, -3.260697e-003, -


© ISO/IEC 2004 — All rights reserved

Copyright International Organization for Standardization
Provided by IHS under license with ISO
No reproduction or networking permitted without license from IHS
Not for Resale

1.379605e-002, -1.140271e-002, 6.236235e-004, 5.727162e-003, 5.030358e-003, 1.721068e-003, 3.526915e-003, 1.034516e-002, 8.121673e-003, 1.149720e-002, 8.380177e-003, 2.432520e-003, -4.807781e-003, -1.183625e-002, -1.213568e-002, 5.881158e-004, -4.480121e-004, -3.289089e-003, -1.394794e-002, -8.878118e-003, 7.816787e-004, -2.389890e-003, -8.082444e-003, -4.813664e-003, 3.305850e-003, 5.906925e-003, 8.696469e-003, 2.022237e-002, 1.710068e-003, 1.272107e-002, -3.265079e-002, 2.785698e-002, 1.847518e-002, 1.296761e-002, 1.400716e-004, -1.803943e-002, -2.521924e-002, -1.361835e-002, -1.250571e-002, -1.746722e-002, -1.144571e-002, 9.243454e-004, 4.290382e-004, -9.812918e-003, -2.256143e-003, 1.522352e-002, 1.133961e-002, 4.267879e-003, 3.931401e-004, 1.761354e-003, -3.956559e-003, -1.146336e-002, -1.113051e-002, -3.783502e-003, -2.681012e-003, -4.075091e-003, -3.944623e-003, -2.220355e-003, -8.103500e-003, -1.328770e-002, -9.695276e-003, 9.007767e-003, 1.475530e-002, 9.769427e-003, -5.498357e-003, -3.124251e-003, -1.096223e-002, -1.989408e-002, -1.766417e-002, -4.675125e-003, 1.050503e-002, -2.720599e-003, -2.097834e-002, -1.225019e-002, -5.688065e-004, 1.581556e-002, -4.059384e-002, 1.230495e-002, 5.451681e-003, 1.106637e-003, -1.658497e-002, -2.211090e-002, -1.682359e-002, -7.021706e-003, -1.156283e-002, -2.252888e-002, -2.648912e-002, -4.042051e-003, -1.141271e-002, -2.046273e-002, -1.146275e-002, 1.268897e-002, 1.506251e-002, 1.381449e-002, 4.279112e-003, -3.344348e-003, -1.083099e-002, -1.984762e-002, -2.294440e-002, -1.759634e-002, -1.306849e-002, -8.349808e-003, -3.895826e-003, -1.230687e-003, 1.402924e-002, 1.005318e-002, 6.971018e-003, 1.134246e-002, 2.145564e-002, 2.042762e-002, 1.310345e-002, 1.607608e-002, 6.883925e-003, -3.084226e-003, -6.910863e-004, 6.927432e-003, 1.196387e-002, 1.154095e-002, 4.103536e-004, -9.044869e-003, -8.227677e-003, 1.187482e-002, -4.350606e-002, 6.459860e-003, 1.963713e-002, -9.121245e-003, -1.394552e-002, -4.530838e-003, 2.834631e-003, 4.072720e-003, 9.856440e-003, -9.215777e-003, -2.092673e-002, 8.424539e-003, 5.146513e-003, -9.460366e-003, -1.223089e-002, 3.552411e-003, 1.061154e-002, 1.628487e-002, 1.839685e-002, 1.171046e-002, 1.188325e-003, -4.800069e-003, -5.241587e-003, 3.780663e-003, 1.320001e-002, 2.064789e-002, 2.486948e-002, 2.403587e-002, 1.185946e-002, 1.067640e-003, -3.976766e-003, 1.862941e-004, 5.272815e-003, 6.948582e-003, 4.592636e-003, 3.824301e-003, 2.174932e-003, 8.582195e-003, 2.639511e-002, 3.902884e-003, -1.132005e-002, -1.640558e-004, 6.424096e-003, -3.582216e-004, -4.933506e-003, 1.161637e-003, -4.929606e-002, 7.548344e-004, 1.657991e-002, -9.956737e-003, 1.339903e-003, 1.050140e-002, 5.429852e-003, -1.261689e-003, 9.461083e-003, -3.995529e-003, -1.413031e-002, 1.070389e-002, 7.670770e-003, -1.082216e-002, -1.951235e-002, -1.015524e-002, 9.663021e-004, 4.746961e-003, 5.787665e-003, 1.644070e-003, -1.961599e-003, -4.414780e-003, -5.517479e-004, 6.235452e-003, 1.366011e-002, 1.802165e-002, 1.883159e-002, 1.139778e-002, -2.304914e-003, -1.049374e-002, -1.335599e-002, -1.141517e-002, -1.169664e-002, -9.199376e-003, -9.637192e-003, -1.045729e-002, -9.707479e-003, -1.699419e-004, 3.153286e-002, 1.555384e-002, -1.382267e-002, -9.430033e-003, -3.738651e-003, 8.288026e-003, 4.046719e-003, 7.090019e-003, -5.485771e-002, -8.622258e-004, 2.320422e-002, -4.884788e-003, 1.988136e-003, 3.263683e-003, -1.198287e-002, -2.091271e-002, 6.003924e-004, 2.239944e-003, -7.899017e-003, 4.905023e-003, -5.430244e-004, -1.262367e-002, -2.775412e-002, -1.622865e-002, -3.159034e-003, -2.258492e-003, -8.251279e-003, -1.740123e-002, -2.312830e-002, -2.104140e-002, -1.569046e-002, -8.425378e-003, -2.136478e-003, 1.270927e-003, -2.577758e-003, -9.417822e-003, -1.759863e-002, -1.886458e-002, -1.273786e-002, -1.477406e-002, -1.754699e-002, -1.890680e-002, -1.835161e-002, -1.484723e-002, -5.588463e-003, -1.152623e-002, 2.326002e-003, -5.038017e-003, -1.727101e-002, -3.034587e-003, -3.263736e-003, -5.698108e-003, -5.532624e-003, -5.325341e-003, -4.883623e-002, -6.023091e-003, 1.070801e-002, 7.402207e-003, 1.428296e-002, 8.604921e-003, -3.574886e-003, -1.906998e-002, 9.101179e-003, 1.223218e-002, 1.118101e-002, 1.321723e-002, 6.171487e-003, 7.441961e-003, 1.579609e-003, 6.740285e-003, 1.049931e-002, 1.360747e-002, 5.158359e-003, -1.555610e-003, -8.382468e-003, -9.143526e-003, -5.335178e-003, -4.216504e-004, 2.124609e-003, 4.437309e-003, -2.271406e-003, -1.021206e-002, -1.146910e-002, -3.062423e-003, 4.795788e-003, 4.561633e-003, -6.266832e-003, -1.258423e-002, -7.831303e-003, 5.276824e-003, 1.444093e-002, -9.686438e-004, 1.361290e-003, -1.795875e-002, -2.354596e-002, -1.533554e-003, 6.503043e-003, -2.910518e-003, -1.299142e-002, -1.427528e-002, -4.216401e-002, -1.453615e-002, -4.559089e-003, -1.954508e-003, 1.022656e-003, 3.084613e-003, 2.807557e-003, -1.363212e-002, 3.501629e-003, 9.280269e-003, 4.839440e-003, 1.394806e-002, 3.357483e-004, 1.485356e-003, 1.408074e-002, 1.490256e-002, 9.979642e-003, 1.115978e-002, 4.429979e-003, -4.886966e-003, -1.060635e-002, -1.619412e-002, -1.497136e-002, -7.792273e-003, -8.194335e-003, -5.865884e-003, -9.179199e-003, -2.198437e-003, 9.248404e-003, 1.654617e-002, 2.504613e-002, 2.059098e-002, 1.069668e-002, 1.350896e-002, 1.577431e-002, 2.744555e-002, 3.239486e-002, 1.749219e-002, 1.488967e-002, -1.225060e-002, -1.801443e-002, -9.643007e-003, 5.560676e-003, 1.141128e-002, 6.706682e-004, 4.197941e-003},
{-4.747027e-002, -4.061246e-002, -1.007073e-002, 5.273950e-003, 3.759044e-003, -1.074634e-002, -2.337664e-002, -1.553854e-002, -2.882153e-003, -4.767020e-003, -1.429384e-003, 1.232859e-002, 2.918080e-002, 3.390007e-002, 2.801779e-002, 1.255050e-002, 5.369474e-005, -1.307727e-002, -2.084004e-002, -2.070432e-002, -2.155984e-002, -1.353578e-002, -6.061192e-003, 3.815377e-003, 1.379812e-002, 1.838887e-002, 1.443460e-002, 1.693744e-002, 2.336861e-002, 2.974501e-002, 3.381305e-002, 2.551024e-002,

© ISO/IEC 2004 — All rights reserved


Copyright International Organization for Standardization
Provided by IHS under license with ISO
No reproduction or networking permitted without license from IHS
Not for Resale

9.538366e-003, -1.047835e-002, -3.476978e-002, -3.960896e-002, -2.603921e-002, -5.933395e-003, 7.058545e-003, 8.105464e-004, -9.878454e-003, -2.239069e-002, -3.301430e-002, -7.566799e-003, -2.402150e-002, -3.323747e-002, -2.192087e-002, -2.257043e-002, 9.099755e-003, 1.665798e-002, 1.074602e-002, -8.034200e-003, -1.216151e-002, -4.355387e-004, -1.034721e-002, -2.011998e-002, -1.921252e-002, 6.340743e-004, 1.561483e-002, 1.010457e-002, -2.668769e-003, -3.928585e-003, -1.328307e-002, -1.907619e-002, -2.378509e-002, -2.282432e-002, -1.823358e-002, -8.737159e-003, 9.070297e-004, 9.510189e-003, 1.752871e-002, 2.339107e-002, 2.115786e-002, 1.127956e-002, -4.819466e-004, -5.776347e-003, -1.960196e-003, 1.017228e-002, 1.275401e-002, 5.674288e-003, -3.416524e-003, -1.023534e-002, -9.204277e-003, 8.554910e-003, 3.337943e-002, 2.701069e-002, 1.257623e-002, 4.671644e-003, -2.684811e-003, -7.948721e-003, -4.272827e-003, -1.790171e-002, -1.000649e-002, -9.353752e-003, 1.677292e-002, 1.450702e-002, 2.854454e-003, 5.665488e-005, 1.373912e-002, 1.758489e-002, -6.954728e-003, -7.990579e-003, -4.686355e-003, 2.826821e-003, 1.153950e-002, 1.116700e-002, 1.312450e-002, 1.397724e-002, 6.469201e-003, -1.996426e-003, -8.759488e-003, -1.184660e-002, -8.853553e-003, -8.986247e-003, -8.601581e-003, -1.917031e-003, 1.219362e-002, 1.859946e-002, 1.836119e-002, 8.690606e-003, 8.752120e-004, -9.960448e-003, -2.258949e-002, -2.696648e-002, -1.644041e-002, -5.361761e-004, 7.610899e-004, -4.847435e-003, -5.211668e-003, 3.342506e-003, 2.346620e-002, 1.709829e-002, 7.913409e-003, 2.142743e-003, 8.889543e-003, 2.669580e-003, 5.645036e-003, -3.872070e-004, 9.992869e-004, 2.978892e-004, 1.510062e-002, 4.133086e-004, -3.370353e-003, 8.374077e-003, 2.533371e-002, 9.868579e-003, -7.389687e-003, -6.080645e-003, -7.808452e-003, -1.310523e-003, 1.285900e-002, 2.015535e-002, 2.340554e-002, 1.755572e-002, 8.463007e-003, 8.425136e-004, -6.443459e-003, -1.187302e-002, -1.828243e-002, -2.113331e-002, -1.656414e-002, -3.580458e-003, 1.063495e-002, 1.309308e-002, 1.233889e-002, 6.108252e-003, -2.171387e-003, -1.222587e-002, -2.382509e-002, -3.269554e-002, -3.668538e-002, -2.528496e-002, -1.027611e-002, -7.116477e-003, -5.880756e-003, 4.096737e-003, 1.162113e-002, 5.509734e-003, -9.028366e-003, -7.629783e-003, 1.722599e-003, 1.024684e-002, 6.410262e-003, 7.305096e-003, 1.018586e-002, 1.751797e-003, -1.394870e-003, -1.047789e-002, -4.646553e-004, 7.418837e-003, 1.692532e-002, 4.272392e-003, 2.043970e-003, -3.841351e-003, -1.015438e-002, 4.333516e-003, 2.041974e-002, 1.982991e-002, 1.576802e-002, 1.148324e-002, 1.055937e-002, 8.277739e-003, 8.164921e-004, -1.064177e-002, -2.120669e-002, -2.365991e-002, -1.287090e-002, 2.405345e-003, 1.791970e-002, 2.263663e-002, 2.756188e-002, 2.205736e-002, 1.159261e-002, -7.002308e-004, -1.715308e-002, -2.344745e-002, -2.654202e-002, -2.262958e-002, -1.236113e-002, -4.897621e-003, -5.918020e-003, 4.049431e-004, 1.928788e-002, 1.727906e-002, -3.833467e-003, -6.285198e-003, -6.818577e-003, 5.601539e-003, 4.698663e-003, 4.278036e-003, 1.315815e-002, -2.472155e-003, -8.679430e-003, -9.562464e-003, -5.128217e-003, 2.045676e-003, 7.774196e-003, 9.440387e-003, 5.988702e-003, -1.097972e-002, -5.909302e-003, 1.070453e-002, 1.344152e-002, 8.486488e-003, 8.922727e-003, 1.363902e-002, 1.384305e-002, 7.854594e-003, -8.433268e-003, -2.332825e-002, -3.519994e-002, -3.542375e-002, -1.606595e-002, 7.139434e-003, 2.178510e-002, 2.589552e-002, 2.497465e-002, 1.957218e-002, 8.534318e-003, -3.299729e-003, -1.242518e-002, -1.667871e-002, -1.842297e-002, -1.298765e-002, -2.476098e-003, 1.350893e-003, -9.070544e-004, -9.881843e-003, 4.214692e-003, 2.063675e-002, -7.238674e-003, -1.129673e-002, -1.222625e-002, -1.994854e-003, -2.723200e-003, -5.069162e-004, 1.951766e-002, -4.408055e-003, -3.880584e-003, -2.432284e-003, -1.715884e-003, 3.506827e-003, 9.262857e-003, 1.287685e-002, 1.268120e-004, -1.061649e-002, -6.912798e-004, 9.194700e-003, 8.412244e-003, 1.054480e-002, 1.498909e-002, 1.973594e-002, 2.258894e-002, 4.629120e-003, -1.430984e-002, -3.133117e-002, -4.386352e-002, -3.775679e-002, -1.507606e-002, 1.305751e-002, 2.763235e-002, 3.118602e-002, 3.202760e-002, 2.306988e-002, 8.548166e-003, -7.026665e-003, -1.617533e-002, -1.331818e-002, -1.173317e-002, -6.881593e-003, 2.696763e-006, 1.609432e-002, 1.590329e-002, -5.783427e-003, -2.775297e-003, 1.578355e-002, 1.337664e-003, -1.492677e-002, -3.341583e-003, 3.476488e-003, -5.404536e-003, -4.325820e-004, 1.991998e-002, -9.461057e-003, 2.581627e-004, -4.426523e-003, -6.327872e-003, 6.370622e-003, 9.635711e-003, 1.545069e-003, -6.386668e-003, -5.265832e-004, 3.484989e-003, 5.108878e-003, 1.355076e-002, 2.005482e-002, 2.940453e-002, 2.951300e-002, 2.609370e-002, 7.705661e-003, -6.509082e-003, -2.094335e-002, -3.285322e-002, -2.497368e-002, -7.558365e-003, 1.845455e-002, 3.219428e-002, 3.596829e-002, 3.886272e-002, 3.314186e-002, 1.833124e-002, 3.158564e-003, -5.455994e-003, -1.127227e-002, -7.256241e-003, 4.844348e-004, 7.613793e-003, 1.204483e-002, 2.708340e-002, 1.134076e-002, -9.162184e-003, 4.114111e-003, 4.750859e-003, -1.647655e-002, -1.002597e-002, 4.702028e-003, -4.650790e-003, 2.903163e-003, 1.618617e-002, -1.018158e-002, 8.873612e-004, -4.615332e-003, -6.165744e-003, 7.227184e-003, 3.561870e-003, -2.005291e-003, -1.813324e-003, -4.656940e-004, 1.426297e-003, 5.145756e-003, 1.305001e-002, 1.758418e-002, 2.303703e-002, 2.047404e-002, 2.170825e-002, 1.252626e-002, 3.202356e-003, -9.638531e-003, -1.917430e-002, -1.407463e-002, -3.872972e-003, 1.367916e-002, 2.847601e-002, 3.297960e-002, 3.572914e-002, 3.597987e-002, 2.960734e-002, 1.729868e-002, 3.890721e-003, -6.704153e-003, -1.423218e-002, 2.210421e-004, 7.720237e-003, 1.053258e-002, 1.685535e-002, 2.016767e-002, -7.030735e-004, -5.195218e-003, 4.233999e-003, -1.152794e-002, -1.811449e-002, 1.547791e-003, -5.489851e-003, 6.862869e-003, 1.917201e-002, -7.609517e-003, -


© ISO/IEC 2004 — All rights reserved

Copyright International Organization for Standardization
Provided by IHS under license with ISO
No reproduction or networking permitted without license from IHS
Not for Resale

3.627306e-003, -6.352100e-003, -5.946451e-003, -3.652149e-004, 1.432550e-003, 3.606864e-004, 4.683326e-004, -5.418692e-003, 3.125518e-004, 7.372004e-003, 5.844620e-003, 4.011885e-003, 5.263288e-003, 1.638363e-002, 1.987832e-002, 1.163417e-002, 3.459094e-005, -1.287772e-002, -1.677836e-002, -1.649568e-002, -1.165144e-002, -4.287210e-003, 4.773771e-003, 1.241709e-002, 1.768812e-002, 2.045864e-002, 2.011418e-002, 1.499559e-002, 5.611623e-003, -9.515948e-003, -2.527504e-002, -2.369177e-002, -2.670383e-003, 6.618200e-003, 5.628147e-003, 9.043261e-003, 6.687450e-003, -3.789709e-003, 1.753784e-003, 6.390624e-004, -1.986458e-002, -8.390620e-003, 2.589227e-004, 6.756202e-003, 2.748261e-002, -1.127793e-003, -8.872426e-004, 8.676116e-004, -9.581436e-003, -1.021113e-002, 1.963074e-003, 4.576045e-003, -3.874720e-003, -1.382827e-002, -3.949584e-003, -7.365154e-003, -1.118199e-002, -5.878809e-003, 9.078301e-003, 1.824975e-002, 1.200676e-002, 5.448200e-004, -1.058343e-002, -2.200134e-002, -2.427197e-002, -2.800835e-002, -2.734236e-002, -2.234015e-002, -1.808656e-002, -1.381733e-002, -6.390212e-003, -2.634300e-003, -2.296946e-003, -2.088185e-003, -3.089504e-003, -1.833659e-002, -3.935102e-002, -4.553683e-002, -2.889324e-002, -4.981682e-003, -6.537496e-003, -3.419587e-003, -2.219511e-003, 1.408330e-003, -9.677673e-004, 2.551089e-003, -1.547274e-002, -1.245570e-002, 4.237549e-003, 3.945192e-003, 3.568312e-002, 6.887191e-003, 8.513885e-003, 7.783277e-003, -9.528943e-003, -1.459370e-002, 1.990875e-003, 4.858449e-003, -1.702817e-002, -2.335728e-002, -1.394423e-002, -1.979629e-002, -2.084403e-002, -4.156029e-003, 2.043870e-002, 2.193295e-002, 1.108184e-002, -1.325794e-003, -1.547877e-002, -2.902214e-002, -3.030076e-002, -3.350181e-002, -3.321472e-002, -2.849581e-002, -2.733032e-002, -2.295151e-002, -1.850924e-002, -1.743567e-002, -1.606456e-002, -1.659128e-002, -1.883331e-002, -3.053866e-002, -4.557203e-002, -5.508827e-002, -4.664573e-002, -2.026017e-002, -8.345580e-003, -3.713321e-003, -9.438639e-003, -3.809195e-003, 2.715064e-003, 1.015991e-003, -1.376309e-002, -1.040601e-002, 9.506981e-003, 1.055931e-002, 3.534218e-002, 8.230099e-003, 1.197656e-002, 5.549248e-003, -3.616676e-003, -1.320555e-002, 4.944075e-003, -5.943825e-005, -2.420810e-002, -2.200935e-002, -1.615870e-002, -1.285179e-002, -1.304034e-002, 4.330311e-003, 2.951536e-002, 3.352967e-002, 2.687659e-002, 1.496116e-002, -5.068788e-003, -2.122049e-002, -2.563882e-002, -2.338967e-002, -1.849099e-002, -1.601036e-002, -1.490837e-002, -1.185713e-002, -1.034741e-002, -1.075424e-002, -1.051381e-002, -1.309506e-002, -1.898688e-002, -2.979073e-002, -3.746778e-002, -4.605333e-002, -4.469768e-002, -2.583935e-002, -6.448115e-003, 1.181587e-003, -5.324655e-003, -1.382391e-002, 5.923099e-003, 1.178351e-002, -4.654220e-003, -2.304703e-003, 1.434459e-002, 1.290902e-002, 3.064062e-002, 1.054937e-002, 1.603312e-002, 1.175161e-002, 4.701121e-003, -6.145810e-003, 1.205377e-002, -2.739297e-003, -2.302279e-002, -1.213025e-002, 2.852404e-003, 3.167468e-003, 1.252350e-003, 2.101252e-002, 4.156410e-002, 4.758469e-002, 4.156338e-002, 2.510811e-002, 3.988839e-003, -7.526999e-003, -8.593023e-003, -3.477840e-003, 3.549725e-003, 9.441082e-003, 1.289206e-002, 1.390659e-002, 1.488480e-002, 1.206984e-002, 1.393288e-002, 1.151924e-002, 2.463081e-003, -1.207774e-002, -2.709692e-002, -3.269288e-002, -2.941146e-002, -2.445928e-002, -1.755287e-003, 7.141066e-003, 4.057996e-003, -1.305473e-002, -2.574691e-003, 1.280746e-002, 8.987927e-004, 4.992206e-003, 1.455277e-002, 1.584397e-002, 1.836422e-002, 2.755285e-003, 1.177060e-002, 1.134224e-002, 7.710887e-003, 5.485276e-003, 2.262743e-002, 1.026716e-003, -1.473800e-002, 4.507880e-003, 2.362715e-002, 1.327770e-002, 1.072095e-002, 3.217975e-002, 4.765032e-002, 5.149343e-002, 3.811216e-002, 1.793420e-002, 2.571257e-003, -3.652082e-003, -6.537033e-003, -1.950177e-003, 8.856855e-003, 2.059005e-002, 2.540492e-002, 3.118862e-002, 3.585631e-002, 3.763044e-002, 3.762674e-002, 3.052770e-002, 2.066551e-002, 8.088814e-003, -7.367493e-003, -1.192922e-002, -8.388569e-003, -7.346488e-003, 3.342315e-003, 1.299660e-002, 9.394915e-003, -5.666499e-003, -6.924518e-003, 6.194438e-003, 1.466796e-003, 2.667225e-002, 7.643748e-003, 8.795861e-003, 8.477452e-003, -8.183938e-003, 5.889646e-003, 3.270445e-003, 5.879545e-003, 1.260478e-002, 2.188533e-002, 5.256732e-003, -2.599368e-003, 2.474640e-002, 3.084959e-002, 9.520721e-003, 6.803171e-003, 2.604593e-002, 3.169298e-002, 2.527863e-002, 1.111683e-002, 2.369603e-003, -5.670825e-003, -8.974257e-003, -1.273552e-002, -1.113208e-002, 5.514380e-004, 1.270033e-002, 1.867564e-002, 2.545431e-002, 3.064924e-002, 3.183868e-002, 3.190377e-002, 2.499119e-002, 2.031592e-002, 1.660768e-002, 9.100263e-003, 9.645426e-003, 1.457208e-002, 2.032837e-002, 1.686156e-002, 1.161948e-002, 8.232047e-003, 2.130378e-003, -7.193361e-003, -2.628866e-003, -3.899448e-003, 2.868856e-002, -1.074063e-002, 2.585620e-003, -7.191581e-003, -1.896827e-002, 2.982400e-003, -1.371841e-003, 8.018405e-003, 1.105188e-002, 1.774747e-002, 9.787111e-004, 1.735010e-003, 2.730838e-002, 2.321264e-002, -2.217359e-003, -6.434077e-003, 4.802575e-003, 1.883834e-003, -2.685075e-003, -5.987737e-003, -6.024487e-003, -8.622039e-003, -1.401357e-002, -2.286499e-002, -2.291670e-002, -1.954143e-002, -1.156620e-002, -5.337147e-003, 1.166234e-003, 6.262720e-003, 8.200327e-003, 1.129930e-002, 7.781920e-003, 1.203481e-002, 1.480901e-002, 1.677925e-002, 2.043530e-002, 2.265390e-002, 2.814848e-002, 1.974955e-002, 1.759299e-003, -8.081252e-004, -2.755734e-003, -2.949237e-003, -6.371682e-003, -1.053750e-002, 2.638104e-002, -3.015307e-002, -4.840055e-003, -1.985608e-002, -2.836853e-002, 4.464148e-003, -1.034334e-003, 9.601178e-003, 4.527657e-003, 8.413759e-003, -2.473172e-003, 4.257472e-003, 1.730616e-002, 7.748676e-003, -1.844507e-002, -2.333213e-002, -1.541719e-002, -1.875909e-002, -1.398036e-002, -9.846730e-003, -5.604624e-003, -

© ISO/IEC 2004 — All rights reserved


Copyright International Organization for Standardization
Provided by IHS under license with ISO
No reproduction or networking permitted without license from IHS
Not for Resale

5.488465e-003, -1.184015e-002, -1.990256e-002, -2.808365e-002, -3.546467e-002, -3.473732e-002, -3.290681e-002, -2.227230e-002, -2.162207e-002, -1.710501e-002, -1.032757e-002, -1.218068e-003, 1.412097e-002, 2.028383e-002, 2.103948e-002, 2.430202e-002, 2.077194e-002, 1.550689e-002, 1.238613e-002, -6.052168e-003, -1.258944e-002, -1.042991e-002, -8.910351e-004, -6.681494e-003, -1.725280e-002, 1.834242e-002, -4.004194e-002, -1.440505e-002, -2.452742e-002, -2.271447e-002, 9.476478e-003, -2.263096e-003, 5.967701e-003, -1.061852e-002, -6.624652e-003, -3.809945e-003, -4.447263e-003, -5.321327e-003, -1.216045e-002, -2.189452e-002, -1.610956e-002, -4.004458e-003, -4.666800e-003, -4.142025e-003, -4.497970e-003, -1.181986e-005, 1.249352e-003, -2.408721e-003, -4.322687e-003, -9.989991e-003, -1.858148e-002, -2.337092e-002, -2.260443e-002, -1.188633e-002, -1.229623e-002, -7.083841e-003, 4.399111e-003, 1.430785e-002, 3.080571e-002, 3.452575e-002, 2.620782e-002, 9.918918e-003, -1.830579e-003, -4.237268e-003, -4.856989e-003, -9.649912e-003, -2.074513e-002, -2.617985e-002, -4.241331e-003, -5.711880e-003, -1.636711e-002, 1.270987e-002, -3.564568e-002, -1.555027e-002, -2.789155e-002, -1.762521e-002, 1.552489e-002, -5.611281e-003, 2.437437e-003, -2.267803e-002, -1.578165e-002, -6.551879e-003, -1.636644e-002, -2.540286e-002, -1.614383e-002, -4.473656e-003, 1.713764e-002, 3.054381e-002, 3.320864e-002, 2.321651e-002, 1.255651e-002, 1.636374e-004, -1.156887e-002, -1.331575e-002, -3.494911e-003, 1.023550e-003, 2.599897e-003, 6.039396e-003, -3.782209e-004, -3.551938e-003, -8.395650e-003, -1.665768e-003, 9.936423e-003, 2.233318e-002, 3.335708e-002, 3.315197e-002, 1.994875e-002, 6.331198e-003, -1.735882e-002, -3.735930e-002, -3.331161e-002, -2.034123e-002, -2.507513e-002, -3.824787e-002, -1.151095e-002, -7.693715e-004, -5.656753e-003, 1.361321e-002, -2.549293e-002, -5.743991e-003, -1.956173e-002, -2.264198e-003, 7.351199e-003, -5.495866e-003, 3.456657e-003, -2.669978e-002, -2.198646e-002, -4.355589e-003, -2.419691e-002, -3.702232e-002, -1.713948e-002, 4.681115e-003, 1.884850e-002, 3.322868e-002, 3.766583e-002, 3.005523e-002, 1.813949e-002, -4.473262e-003, -3.688033e-002, -5.026190e-002, -3.727791e-002, -1.493205e-002, -9.875115e-005, 6.404718e-003, -1.160025e-002, -2.384953e-002, -3.130560e-002, -2.915019e-002, -1.901191e-002, -6.575728e-003, 5.592855e-003, 1.005923e-002, 1.172371e-002, 9.272619e-003, -9.427368e-003, -4.330140e-002, -5.124241e-002, -2.963942e-002, -2.799051e-002, -4.337307e-002, -1.713202e-002, 1.588066e-003, -6.877402e-004, 1.943600e-002, -1.592785e-002, 6.679516e-003, -2.304913e-003, 1.503341e-002, 1.468870e-002, -7.569466e-003, 1.850349e-003, -2.239398e-002, -3.010976e-002, -5.838234e-003, -2.893418e-002, -4.550206e-002, -2.030540e-002, 3.589474e-003, 1.854900e-002, 2.708096e-002, 3.140401e-002, 3.651873e-002, 4.370684e-002, 3.959203e-002, 8.485268e-003, -2.488467e-002, -2.373388e-002, -1.310598e-002, -2.345615e-003, -3.026305e-003, -2.624510e-002, -3.570204e-002, -2.042379e-002, -6.451288e-004, 8.253447e-003, 8.452074e-003, 5.544193e-003, 4.930206e-003, 6.997725e-003, 1.218551e-002, 7.764183e-003, -1.731253e-002, -4.515568e-002, -2.780186e-002, -7.287171e-003, -2.588153e-002, -3.491320e-003, 8.483804e-003, 6.604036e-003, 2.503272e-002, -7.829546e-003, 1.877554e-002, 9.460181e-003, 2.173427e-002, 7.332960e-003, -2.032552e-002, -8.009872e-003, -3.878415e-003, -1.014837e-002, 9.526878e-003, -1.593789e-002, -3.276603e-002, 4.350518e-003, 2.032181e-002, 1.250562e-002, 3.692282e-003, -1.357206e-002, -4.941288e-004, 3.088016e-002, 5.137598e-002, 3.745771e-002, 7.992463e-003, 5.250365e-003, -1.343185e-003, -1.727044e-002, -1.484054e-002, -3.950692e-002, -2.170217e-002, 1.046666e-002, 3.288587e-002, 2.075588e-002, -1.413705e-002, -5.884459e-002, -8.238258e-002, -6.551563e-002, -3.401166e-002, -7.467280e-003, -3.792775e-003, -1.289164e-002, -5.267689e-003, 2.802902e-002, 2.051417e-002, 2.309599e-002, 1.861127e-002, 1.501961e-002, 1.603217e-002, 1.074181e-002, 1.509040e-002, 9.265763e-003, 1.227065e-002, -3.776202e-003, -1.848296e-002, -7.254921e-003, 1.246769e-002, 1.262005e-002, 3.608188e-002, 1.317327e-002, 6.334433e-003, 4.225391e-002, 3.278624e-002, -1.741544e-002, -2.134865e-002, 3.846516e-003, 2.543938e-002, 4.165301e-002, 4.590781e-002, 1.783482e-002, -2.974939e-003, -1.567041e-003, 7.238958e-003, -1.053380e-002, -9.847452e-003, -3.423442e-002, -2.396180e-002, -8.172007e-004, 8.589690e-003, 9.962708e-003, -3.875213e-003, -3.739224e-002, -6.005770e-002, -4.974879e-002, -5.613538e-002, -3.262948e-002, 1.170197e-002, 2.098263e-002, 2.888422e-002, 6.972754e-002, 6.031547e-002, 3.701795e-002, 2.261884e-002, 1.197420e-002, 8.186205e-003, 1.083307e-002, 2.029049e-002, 1.555428e-002, 7.142738e-004, -1.549715e-002, -1.826686e-002, 1.688590e-004, 1.612413e-002, 2.573644e-002, 3.996987e-002, 4.140288e-002, 5.610723e-002, 6.751727e-002, 8.398574e-003, -5.539445e-002, -6.396476e-002, -4.297963e-002, -1.750630e-002, 6.153047e-003, -1.125790e-002, -2.879069e-002, -3.741217e-002, -2.370311e-002, 9.814332e-003, 2.841475e-002, 3.615446e-002, 2.958190e-003, -2.983326e-002, -1.738316e-002, -7.190007e-003, -1.494209e-002, -3.271826e-002, -2.373860e-002, -2.024067e-002, -1.488454e-002, -4.115992e-002, -2.663077e-002, 1.917229e-002, 3.622255e-002, 4.410656e-002, 6.955509e-002, 5.808774e-002, 3.216979e-002, 9.898289e-003, 2.914359e-004, -1.232489e-003, 8.969295e-003, 2.550880e-002, 5.429011e-003, -1.012694e-002, -2.409332e-002, -1.451593e-002, 8.545123e-003, 1.212907e-002, 1.796669e-002, 1.253310e-002, 1.463875e-002, 3.537242e-002, 4.632444e-002, -8.900275e-004, -4.333549e-002, -5.161467e-002, -4.938581e-002, -2.599642e-002, -1.696474e-002, -2.629829e-002, -4.139800e-002, -4.507715e-002, -1.965455e-002, 1.324445e-002, 2.669515e-002, 3.273839e-002, 3.336451e-002, -2.672849e-002, -1.841814e-002, 2.516508e-003, 8.916371e-003, -9.899555e-003, -1.172999e-002, -2.091681e-002, -3.036725e-002, -1.194141e-002,


© ISO/IEC 2004 — All rights reserved

Copyright International Organization for Standardization
Provided by IHS under license with ISO
No reproduction or networking permitted without license from IHS
Not for Resale

1.402376e-002, 3.804736e-002, 3.500353e-002, 1.928603e-002, 3.410347e-002, 3.791389e-002, 1.584097e-002, 4.243420e-004, -1.148207e-002, -3.523028e-003, 1.099965e-002, 2.240263e-002, -2.706827e-003, -1.299070e-002, -2.036378e-002, -1.559882e-002, 2.299254e-003, 4.683723e-003, 1.116966e-002, -1.274336e-002, -1.360437e-002, 1.010127e-002, 2.124213e-002, 3.626442e-004, -9.316441e-003, 2.403118e-003, 2.190672e-002, 4.198485e-002, 4.629210e-002, 3.180094e-002, -4.079920e-003, -2.834885e-002, -6.543020e-003, 1.627964e-002, -1.243788e-003, 5.705588e-003, 3.532967e-002, 7.800213e-003, -1.986477e-002, 1.507674e-002, 4.551989e-002, 5.288981e-002, 4.719424e-002, 2.784862e-002, 1.663826e-002, 2.174448e-002, 3.353412e-002, 3.748362e-002, 1.122423e-002, -1.597928e-002, -1.981586e-003, 8.404776e-003, -1.317721e-003, -9.302418e-003, -1.071130e-002, 5.229356e-003, 1.261084e-002, 1.974306e-002, 2.734102e-004, -5.786302e-003, -9.683841e-003, -4.360844e-003, 7.872072e-003, 2.237926e-003, 1.608739e-003, -2.290866e-002, -2.509434e-002, -4.507921e-003, 1.105615e-003, -2.195176e-003, -4.308323e-003, 1.031162e-002, 3.623010e-002, 5.190391e-002, 5.070916e-002, 3.568509e-002, 6.474736e-003, -6.881802e-003, 5.884271e-003, 5.884005e-003, -2.423409e-002, -1.252031e-002, 2.209182e-002, 3.595526e-002, -2.426363e-002, -1.220450e-003, 4.006304e-002, 6.110586e-002, 6.124271e-002, 4.469765e-002, 2.878630e-002, 2.003964e-002, 2.443435e-002, 1.916810e-002, -1.286277e-002, -3.487533e-002, -3.004564e-002, -1.139009e-002, -1.400738e-002, -2.526751e-002, -1.580096e-002, 4.376828e-003, 6.942440e-003, 1.566982e-002, 1.270186e-003, 4.798716e-003, 3.241467e-003, 6.592091e-003, 2.027281e-002, 5.642035e-003, 1.162473e-003, -2.228981e-002, -2.459824e-002, -1.360023e-002, -1.522897e-002, -1.607216e-002, -1.664954e-002, -2.180451e-003, 1.780324e-002, 2.806808e-002, 2.313262e-002, 9.010771e-003, -7.911269e-003, -3.734499e-003, 1.327083e-002, -8.992672e-003, -3.645391e-002, -2.240769e-002, 8.020677e-003, 4.293817e-002, -5.560877e-003, -4.472839e-002, -9.868918e-003, 1.997622e-002, 2.664322e-002, 1.856462e-002, 5.872144e-003, -2.133535e-003, 3.120513e-003, -4.068624e-003, -2.266282e-002, -3.410703e-002, -4.086645e-002, -2.188980e-002, -9.931188e-003, -2.695117e-002, -1.382672e-002, 3.225621e-003, 2.956023e-003, -4.410583e-003, 3.858208e-003, -6.024830e-003, 6.111960e-003, 7.539978e-003, 2.085363e-002, 5.662008e-003, -2.265467e-003, -1.519482e-002, -1.863489e-002, -1.626160e-002, -2.120533e-002, -2.955612e-002, -3.660088e-002, -3.350199e-002, -2.643237e-002, -2.593628e-002, -3.032765e-002, -3.549857e-002, -2.134446e-002, 5.490163e-003, 9.990650e-003, -1.386618e-002, -3.524826e-002, -2.714578e-002, -3.960047e-003, 3.350458e-002, 4.417980e-002, -2.460156e-002, -6.513016e-002, -5.015219e-002, -4.149724e-002, -3.833204e-002, -4.025125e-002, -4.134114e-002, -3.044972e-002, -2.071764e-002, -9.659106e-003, -1.759176e-002, -4.523641e-002, -2.611548e-002, 3.376743e-003, -4.384192e-003, -4.309382e-003, 4.389896e-003, -1.985713e-003, -3.932341e-003, 3.064130e-003, -6.725659e-003, 1.382724e-002, 8.802677e-003, 7.906825e-003, -1.014298e-003, -7.998293e-003, -7.919771e-003, -7.766559e-003, -2.586555e-004, -5.571480e-003, -1.801978e-002, -3.737867e-002, -5.204919e-002, -6.188324e-002, -6.281851e-002, -5.163025e-002, -2.269270e-002, 7.852696e-003, 1.871254e-002, -1.397409e-003, -1.175588e-002, -2.176741e-002, -2.727658e-002, -1.380691e-002, 2.185940e-002, 5.435202e-002, 3.861872e-002, -1.367477e-002, -5.342723e-002, -6.776521e-002, -6.868670e-002, -6.070745e-002, -4.447387e-002, -1.647253e-002, 3.850304e-003, 1.845308e-002, -8.697530e-003, -4.656122e-002, -2.629882e-002, 1.272602e-002, 1.005760e-002, 1.114886e-002, 1.325746e-002, 4.307792e-004, 1.557749e-002, -1.294467e-002, -1.353531e-002, 1.053844e-002, 5.085127e-003, -2.548264e-003, -1.533083e-002, -1.643417e-002, 6.579324e-004, 7.900105e-003, 1.363735e-002, 1.592322e-002, 1.595565e-002, 9.537472e-003, -5.364060e-003, -1.224843e-002, -1.327169e-002, 3.100605e-003, 2.762028e-002, 3.711812e-002, 1.792258e-002, -4.653390e-003, 4.791325e-004, -7.258768e-003, -2.806265e-002, -2.740826e-002, 7.404672e-003, 3.706584e-002, 4.776179e-002, 5.039904e-002, 2.693182e-002, 4.592701e-003, -6.068132e-003, -6.948439e-003, 5.612298e-003, 2.498422e-002, 3.584189e-002, 3.009618e-002, -2.479279e-003, -3.424943e-002, -9.764124e-003, 1.774576e-002, 1.409726e-002, 2.141031e-002, 1.915805e-002, 6.128681e-003, 1.436810e-002, -1.962685e-002, -2.117216e-002, 2.983615e-003, 3.458730e-003, -7.147572e-003, -2.899090e-002, -3.134967e-002, -7.101285e-003, 1.125682e-002, 2.023125e-002, 3.252529e-002, 3.638659e-002, 4.039311e-002, 3.675321e-002, 3.469010e-002, 3.259068e-002, 3.032669e-002, 3.581049e-002, 2.882879e-002, -7.445043e-004, -2.451505e-002, -1.551491e-002, -1.682708e-003, -2.331465e-002, -4.229683e-002, -3.174756e-002, -3.183816e-003, 8.926089e-003, 3.372461e-002, 6.185747e-002, 6.458428e-002, 5.754078e-002, 5.416348e-002, 5.668237e-002, 6.085722e-002, 5.805021e-002, 3.765330e-002, 6.408504e-003, -1.935343e-002, 4.954870e-003, 1.005717e-002, 1.708344e-003, 1.612258e-002, 1.078239e-002, 6.221340e-003, 1.459023e-002, -1.707465e-002, -1.915489e-002, 5.596361e-003, 1.088626e-002, -3.574273e-003, -2.773346e-002, -4.749066e-002, -1.338688e-002, 9.837344e-003, 2.051372e-002, 2.910747e-002, 3.519942e-002, 4.095805e-002, 3.969405e-002, 3.550021e-002, 2.266399e-002, 1.294352e-002, 1.451262e-002, 7.828858e-003, -1.101717e-002, -1.139185e-002, 1.746369e-002, 1.687288e-002, -4.366333e-003, -1.983385e-002, -2.681055e-002, -2.275283e-002, -2.244485e-002, -1.002297e-002, 2.693508e-002, 5.077679e-002, 5.784961e-002, 6.185691e-002, 6.779599e-002, 6.839390e-002, 5.951732e-002, 3.585504e-002, 8.763023e-003, -8.453865e-003, 1.178764e-002, 2.943861e-003, -1.309277e-002, 8.116812e-003, 7.545967e-003, 8.103335e-003, 4.563826e-003, -5.223834e-003, -1.340009e-002, 7.728146e-003, 1.019819e-002, -

© ISO/IEC 2004 — All rights reserved


Copyright International Organization for Standardization
Provided by IHS under license with ISO
No reproduction or networking permitted without license from IHS
Not for Resale

3.887624e-003, -1.258879e-002, -2.913642e-002, -7.266221e-003, 5.343693e-003, 1.381628e-002, 1.836307e-002, 2.187763e-002, 2.638807e-002, 1.751001e-002, 4.976763e-003, -3.856258e-003, -6.808820e-003, 2.772371e-003, 1.117107e-002, 6.266688e-003, -2.366082e-003, 2.850592e-003, 8.406553e-003, 2.071049e-002, 1.236803e-002, 3.437035e-003, 2.047739e-003, 2.257197e-004, -1.849991e-002, -1.148117e-002, 8.518891e-003, 2.386429e-002, 3.635324e-002, 4.828628e-002, 5.207765e-002, 4.886402e-002, 2.984656e-002, 9.044571e-003, 8.514216e-003, 2.329645e-002, -4.844195e-003, -1.813052e-002, 1.122521e-002, 1.807114e-003, -2.880529e-003, -3.213791e-003, 4.148800e-003, -2.707924e-003, 1.332548e-002, 7.394592e-003, -4.662345e-003, 7.447651e-003, 1.864228e-002, 2.091896e-002, 4.907454e-003, 7.942747e-003, 5.954240e-003, 1.043084e-003, 1.839826e-003, -8.779249e-003, -1.978865e-002, -2.163894e-002, -9.687529e-003, 8.661450e-003, 1.521910e-002, 8.466862e-003, -1.072707e-002, -2.429960e-002, -2.410754e-002, 1.088551e-003, 2.014905e-002, 3.312047e-002, 3.766425e-002, 3.257298e-002, 8.333522e-003, -1.610113e-002, -1.931242e-002, -1.409345e-002, 2.594560e-005, 1.898947e-002, 3.202464e-002, 3.284911e-002, 2.130406e-002, 1.888586e-002, 3.702267e-002, 3.800300e-002, -6.761150e-003, -2.314358e-002, 8.486704e-003, -5.549088e-003, -1.805238e-002, -1.053609e-002, 1.146018e-002, 6.270495e-003, 1.355041e-002, 9.371187e-003, 1.508460e-003, 1.186766e-002, 2.721661e-002, 3.510876e-002, 4.052883e-003, 5.120770e-003, 7.946316e-004, -1.780798e-002, -1.950511e-002, -2.989186e-002, -4.249779e-002, -3.802034e-002, -7.230980e-003, 2.088290e-002, 2.571792e-002, 1.210888e-002, -8.083085e-003, -2.768780e-002, -3.530651e-002, -9.010490e-003, 1.788923e-002, 3.888581e-002, 4.838094e-002, 5.091801e-002, 3.930135e-002, 8.149798e-003, -2.382991e-002, -4.063590e-002, -3.202667e-002, -1.040986e-002, 8.239754e-003, 1.317398e-002, 9.330989e-003, 2.526594e-002, 4.355237e-002, 3.949458e-002, -1.171589e-002, -1.546522e-002, 5.756645e-003, -1.202928e-002, -1.916851e-002, -1.286377e-002, 9.888919e-003, 1.417070e-002, 2.062188e-002, 1.068605e-002, 6.012337e-003, 1.132945e-002, 2.245596e-002, 3.223061e-002, 8.346725e-004, -1.680264e-003, -1.766540e-003, -2.731334e-002, -3.917861e-002, -4.854871e-002, -6.195327e-002, -4.825936e-002, -2.442938e-003, 3.064106e-002, 3.260654e-002, 1.773869e-002, 4.833796e-003, -1.096651e-002, -2.482944e-002, -9.496135e-003, 5.451641e-003, 2.446429e-002, 3.734557e-002, 4.768334e-002, 5.020791e-002, 2.707777e-002, -2.011914e-002, -5.955539e-002, -6.209241e-002, -4.044276e-002, -1.322171e-002, -2.881978e-003, -5.009887e-003, 1.608940e-002, 2.369911e-002, 1.889098e-002, -6.304096e-004, -2.586600e-003, 1.576081e-003, -8.766325e-003, -8.960311e-003, -1.841868e-002, -5.945659e-003, 2.457387e-002, 1.438129e-002, -2.637093e-003, -4.236601e-003, 2.823356e-003, 8.090141e-003, 1.219088e-002, -5.998352e-003, -6.917073e-003, -2.937991e-003, -2.475168e-002, -4.573126e-002, -6.128777e-002, -6.787735e-002, -4.689292e-002, -1.353583e-002, 1.077256e-002, 1.610020e-002, 1.530049e-002, 1.583872e-002, 1.238604e-002, 7.950173e-003, 7.695565e-003, 1.572471e-002, 3.255891e-002, 4.041661e-002, 3.575035e-002, 3.071992e-002, 1.538368e-002, -2.280106e-002, -6.307787e-002, -7.572630e-002, -5.564190e-002, -2.651054e-002, -1.272361e-002, -1.464064e-002, -4.677793e-003, -9.339285e-003, -5.389943e-003, 2.106708e-004, -8.446168e-004, -4.089131e-003, 1.478368e-003, 2.697787e-003, -2.231136e-002, -1.689063e-002, 1.363653e-002, 3.604451e-003, -1.124482e-002, -6.117567e-003, -1.553479e-003, 4.324068e-003, 3.877223e-003, -6.867393e-003, -1.119460e-002, -1.368468e-003, -1.606420e-002, -4.009652e-002, -5.326193e-002, -4.684383e-002, -2.912934e-002, -1.585808e-002, 3.239984e-004, 1.768892e-002, 2.551607e-002, 3.226630e-002, 2.354463e-002, 1.644215e-002, 1.066284e-002, 1.589452e-002, 2.294806e-002, 2.998016e-002, 2.798987e-002, 9.408584e-003, -5.168973e-003, -2.507093e-002, -5.694689e-002, -7.548820e-002, -5.808661e-002, -3.050994e-002, -2.181337e-002, -2.071729e-002, -2.471909e-002, -3.446403e-002, -1.542075e-002, -9.022490e-003, -6.508110e-003, -1.300487e-003, 1.110079e-002, 1.192107e-003, -1.580126e-002, -2.652042e-002, 2.122451e-003, -1.072160e-003, -1.500125e-002, -1.072978e-002, -4.556317e-003, 7.702952e-003, 7.576061e-003, -5.209165e-004, -2.983594e-003, -6.494958e-005, -7.015218e-003, -2.630404e-002, -3.389135e-002, -1.468673e-002, 1.227802e-004, -9.421675e-003, -7.029294e-003, 1.023459e-002, 1.745019e-002, 1.909910e-002, 1.031964e-002, -6.012814e-004, -3.016972e-003, -4.276969e-003, 3.838295e-003, 1.117361e-002, 1.849475e-002, 4.620320e-003, -1.213183e-002, -1.961988e-002, -4.279782e-002, -6.139643e-002, -4.872875e-002, -2.674273e-002, -2.258033e-002, -1.951924e-002, -2.815103e-002, -2.963952e-002, -8.201577e-003, 3.454445e-005, -2.074248e-003, 3.329098e-003, 1.160647e-002, -9.261389e-003, -2.184412e-002, -3.322589e-002, -2.978260e-003, -1.703319e-003, -1.193821e-002, -1.139664e-002, 1.950414e-003, 1.855812e-002, 1.469524e-002, -1.233862e-003, -2.741502e-003, 6.019875e-003, 6.539938e-003, -7.575216e-003, -1.142510e-002, 6.807303e-003, 2.088661e-002, 4.043745e-003, -2.420834e-003, -3.946488e-003, -2.065264e-003, -3.000499e-003, -1.338080e-002, -1.292688e-002, -6.338569e-003, -4.915798e-003, -2.308743e-003, 5.179352e-003, 9.215364e-003, 5.710816e-003, -4.609251e-003, -3.172676e-003, -1.918336e-002, -3.763043e-002, -3.279077e-002, -2.118880e-002, -1.375177e-002, -1.230016e-002, -1.500467e-002, -4.709012e-003, 1.274235e-002, 9.419860e-003, 6.191421e-003, 2.782311e-003, 4.899299e-003, -1.695282e-002, -2.349452e-002, -3.332202e-002, 3.313299e-003, 9.135520e-003, 1.395038e-003, -5.251565e-003, 4.691901e-003, 1.959485e-002, 2.208655e-002, -1.777625e-003, -5.324669e-003, 8.470435e-003, 1.934231e-002, 1.025434e-002, 3.708501e-003, 1.728533e-002, 2.666008e-002, 1.592210e-002, -2.708972e-003, -1.474924e-002, -1.992982e-002, -


© ISO/IEC 2004 — All rights reserved

Copyright International Organization for Standardization
Provided by IHS under license with ISO
No reproduction or networking permitted without license from IHS
Not for Resale

2.611913e-002, -3.540683e-002, -3.592642e-002, -3.522349e-002, -3.242489e-002, -2.872059e-002, -1.725221e-002, -3.415595e-003, 4.399317e-005, -1.292940e-003, 4.089671e-004, -8.402277e-003, -2.136934e-002, -2.214281e-002, -1.642450e-002, -7.642491e-003, -1.034743e-002, -5.364441e-003, 1.752975e-002, 3.240156e-002, 5.198150e-003, 6.465023e-003, 4.487033e-003, 4.354622e-004, -1.284162e-002, -1.978705e-002, -1.780060e-002, 2.078868e-002, 2.572226e-002, 1.361605e-002, 6.232705e-003, -4.109811e-004, 7.107832e-003, 9.910269e-003, -5.951686e-003, 1.772862e-004, 5.343163e-003, 2.005756e-002, 2.164114e-002, 5.783660e-003, 1.349628e-002, 2.197469e-002, 1.519659e-002, -1.016182e-003, -7.617326e-003, -7.721685e-003, -9.029359e-003, -1.674875e-002, -1.556023e-002, -1.713425e-002, -2.484818e-002, -2.583469e-002, -1.972109e-002, -1.502438e-002, -1.130249e-002, -6.527231e-003, 3.462970e-003, 3.512560e-003, -7.819602e-003, -1.284697e-002, -4.956695e-003, -2.457637e-004, -3.545748e-003, 5.263110e-003, 3.149260e-002, 2.743583e-002, -7.408337e-003, -2.048307e-003, -2.399296e-003, -9.083713e-004, -6.557811e-003, -1.194189e-002, -1.036683e-002, 2.446941e-002, 2.318626e-002, 1.679887e-002, 1.413007e-002, -7.768723e-003, -9.779158e-003, -6.538053e-003, -1.406250e-002, 1.163119e-002, 1.260166e-002, 1.186099e-002, 2.109941e-002, 6.067714e-003, 7.802381e-003, 1.217161e-002, 1.330471e-002, 6.064670e-003, 2.285844e-003, 2.398616e-003, 3.692236e-003, 1.030225e-003, 1.393573e-003, -1.869068e-003, -6.823661e-003, -1.046890e-002, -1.200062e-002, -1.031971e-002, -5.571135e-003, 1.833458e-003, 1.462615e-002, 1.316066e-002, 1.681230e-003, 3.259227e-004, 6.976991e-003, 2.971904e-003, -6.410708e-003, 4.126548e-003, 2.211643e-002, -3.329843e-003, -1.176720e-002, -1.479990e-003, -1.745867e-003, -3.799332e-003, -7.260785e-003, -1.113564e-002, -9.849424e-003, 1.044716e-002, 4.896252e-003, -2.366513e-003, -3.468884e-003, -1.250185e-002, -1.624535e-002, -5.835385e-003, -7.695572e-003, 1.216645e-002, 1.007868e-002, -6.618959e-003, 3.813353e-003, 1.720458e-003, 4.212534e-003, 6.190005e-003, 1.322415e-002, 1.171622e-002, 7.976994e-003, 6.516626e-003, 7.666989e-003, 6.749325e-003, 8.446148e-003, 9.271098e-003, 6.266319e-003, 1.289795e-004, -4.508329e-003, -5.769892e-003, 1.795656e-003, 1.290454e-002, 1.610590e-002, 1.276800e-002, 3.696487e-003, 3.205632e-004, 1.449960e-002, 6.663612e-003, -1.473343e-002, -1.104246e-002, -5.068579e-003, -1.642712e-002, -5.467846e-003, 1.642674e-003, 5.662184e-004, 1.395926e-003, -6.400170e-003, -1.041007e-002, -1.961401e-002, -4.785264e-003, -1.197209e-002, -1.355553e-002, -1.351292e-003, 3.967974e-003, -5.348239e-003, 2.574857e-003, 4.134605e-003, 4.605656e-003, 6.593311e-003, -1.642494e-002, -1.083731e-002, -3.748648e-003, -7.452820e-004, -2.750761e-003, 5.163115e-003, 1.534591e-002, 1.464799e-002, 8.525865e-003, 8.416386e-004, -7.281940e-004, -9.409171e-004, -4.044117e-004, -1.994806e-003, -1.818285e-003, -4.703081e-003, -4.980033e-003, 1.238492e-003, 1.152456e-002, 1.757516e-002, 1.160323e-002, 8.725061e-004, 2.869179e-003, 1.886706e-002, 5.709315e-003, -1.618531e-002, -2.279263e-002, -1.530968e-002, -3.853017e-003, 2.062094e-003, -1.868306e-003, -1.011606e-003, 6.689274e-003, -1.163246e-002, -1.061446e-002, -2.308373e-002, -8.306350e-003, -1.461737e-002, -3.987113e-003, 1.218747e-002, 1.271036e-002, 5.859418e-003, 4.525695e-003, -2.633640e-004, -9.385582e-003, -3.322399e-003, -2.258653e-002, -3.048908e-002, -8.898722e-003, -1.078690e-003, -7.793066e-003, -6.617483e-003, 5.889222e-003, 1.414768e-002, 1.106714e-002, 2.056237e-003, -3.710715e-004, 2.909114e-003, 5.423286e-003, 4.041734e-003, -8.342152e-004, -5.742402e-003, -4.871687e-003, 1.917493e-003, 1.158858e-002, 1.476742e-002, 7.327507e-003, -3.008785e-003, 2.156411e-003, 1.873305e-002, 3.805839e-003, -9.162894e-003, -2.392550e-002, -1.640186e-002, 6.081549e-003, 8.549877e-003, -4.998745e-003, -4.441005e-004, 1.045675e-002, -9.055588e-003, -1.221569e-002, -2.097666e-002, -5.032938e-003, 1.490643e-003, 8.212227e-003, 1.861064e-002, 9.500127e-003, -5.007678e-003, -1.022306e-002, -9.815946e-003, -2.776429e-002, -9.996041e-003, -1.827076e-002, -3.327683e-002, -1.694463e-002, -4.699465e-003, -1.219643e-002, -2.334978e-002, -1.207596e-002, 2.238852e-003, 1.228932e-002, 1.029737e-002, 5.237330e-003, 6.340016e-003, 7.975773e-003, 4.219942e-003, -3.100420e-003, -7.525028e-003, -4.992757e-003, -1.670034e-004, 4.065043e-003, 2.931208e-003, 1.334856e-003, -5.755286e-003, -1.467621e-003, 1.421047e-002, 3.209071e-003, 1.977955e-003, -1.393603e-002, -3.316548e-003, 1.373402e-002, 1.480443e-002, -4.118152e-003, -3.479429e-003, 1.422279e-002, -2.809232e-003, -1.005903e-002, 3.535926e-003, 1.170543e-002, 1.049915e-002, 8.522422e-003, 1.780775e-002, 8.279884e-004, -3.249407e-002, -3.712838e-002, -2.158571e-002, -3.295250e-002, -2.230600e-003, 3.167832e-003, -1.473137e-002, -1.610095e-002, -1.716478e-003, -3.019611e-003, -1.767800e-002, -1.523891e-002, -1.546408e-003, 1.421419e-002, 1.823848e-002, 1.365967e-002, 1.031550e-002, 1.064403e-002, 8.545045e-003, 3.208183e-003, -1.841259e-003, -6.060562e-003, -7.513610e-003, -3.282156e-003, -1.698125e-003, -1.271994e-003, -1.101941e-002, -6.378518e-003, 2.438938e-003, -1.408595e-003, -2.043509e-003, -8.298353e-003, 3.107978e-003, 1.988654e-002, 2.029414e-002, -1.536743e-003, -6.208670e-003, 5.158821e-003, -4.648741e-003, 2.697870e-003, 7.962514e-003, 1.040782e-002, 2.987077e-003, 5.731068e-003, 8.691023e-003, -1.195145e-002, -3.775053e-002, -2.538966e-002, 2.155412e-003, -1.162387e-002, 1.629212e-003, 1.317799e-002, 2.445870e-003, -1.285000e-002, -2.660087e-003, -6.428093e-003, -1.799368e-002, -1.456195e-002, -4.638583e-003, 6.769957e-003, 1.108849e-002, 1.105635e-002, 5.808055e-003, 1.986005e-003, -2.771028e-004, -6.852207e-003, -9.418371e-003, -1.028492e-002, -4.531851e-003, -2.434570e-003, 4.031942e-003, 3.912888e-003, -6.218911e-004, -7.657125e-004, 2.035706e-003, -5.132950e-003, -

© ISO/IEC 2004 — All rights reserved


Copyright International Organization for Standardization
Provided by IHS under license with ISO
No reproduction or networking permitted without license from IHS
Not for Resale

7.385671e-004, -5.039689e-003, -4.706723e-003, -1.326045e-004, -1.038196e-002, -1.586397e-002, -1.113740e-002, 2.913332e-003, -1.328759e-002, 1.848892e-004, 1.468942e-002, 1.145513e-002, 5.016194e-004, -3.920877e-003, 3.660298e-003, 3.562015e-003, 1.152359e-003, 2.089126e-002, 3.031572e-002, 8.289642e-003, 1.075981e-002, 1.659725e-002, 2.206435e-002, 1.162066e-002, 1.368595e-002, 3.262575e-003, -3.456798e-003, -3.345493e-004, 7.933245e-003, 1.460588e-002, 1.820013e-002, 1.690638e-002, 1.162329e-002, 8.187129e-003, 6.157265e-003, 4.987308e-004, -6.233005e-004, -3.006656e-003, -4.217416e-003, -5.099662e-003, -1.309911e-003, 7.162164e-003, 1.089826e-002, 5.205997e-003, 3.331332e-003, -6.489747e-003, 3.740343e-003, 6.015962e-003, 7.056263e-003, -7.313117e-003, -2.739714e-002, -3.447787e-002, -7.671638e-003, 1.116253e-003, -2.368830e-003, 3.206686e-003, 1.134828e-002, -3.053965e-004, -8.375808e-003, -1.785667e-003, 6.300248e-003, 1.533777e-002, 9.358502e-003, 1.536316e-002, 1.042104e-002, -5.858342e-003, -1.895781e-003, 9.377682e-003, 1.721127e-002, 8.179932e-003, 1.111594e-002, 4.786955e-003, -6.609774e-003, -7.037095e-003, 2.037798e-003, 6.250731e-003, 1.007345e-002, 9.275173e-003, 4.756559e-003, 2.889941e-003, 2.497424e-003, -8.142983e-005, -6.147220e-003, -9.789330e-003, -9.466424e-003, -1.013045e-002, -5.405105e-003, 1.310342e-002, 1.981058e-002, 9.689448e-003, -6.612944e-003, -1.723823e-002, -1.155641e-002, -2.554124e-003, 9.256628e-003, 6.951528e-003, -2.558774e-002, -3.729919e-002, -7.460585e-003, 1.321699e-002, 9.915961e-003, 1.132777e-002, 1.290383e-002, 2.838770e-003, -1.668979e-002, -1.503417e-002, -1.184267e-002, 2.758595e-003, 3.787827e-003, -1.023181e-002, -1.736108e-002, -1.326524e-002, -1.105365e-002, 3.988477e-004, -1.270094e-003, -3.394921e-003, -3.903581e-003, -3.281714e-003, -7.713682e-003, -9.489905e-003, -6.287819e-003, -3.258976e-003, -2.604971e-003, -3.790558e-003, -5.182649e-003, -5.910645e-003, -5.984634e-003, -4.741228e-003, -9.308934e-003, -1.233054e-002, -1.261860e-002, -1.429327e-002, -1.918352e-003, 2.005833e-002, 2.442526e-002, 7.955380e-003, -1.515861e-002, -1.705843e-002, -2.502992e-002, -2.490852e-002, 1.748350e-003, 4.614382e-003, -1.737951e-002, -2.136017e-002, 4.806074e-003, 1.409146e-002, 1.543150e-002, 1.303162e-002, 1.782466e-002, 2.504988e-003, -2.309885e-002, -2.377733e-002, -2.797928e-003, 7.197771e-003, -1.207401e-003, -3.127090e-002, -2.912048e-002, -4.003570e-003, -7.723420e-004, -2.355989e-003, -1.888827e-002, -1.279317e-002, -3.147992e-003, 2.934478e-003, 1.571733e-002, 2.012366e-002, 1.853136e-002, 1.750744e-002, 1.704673e-002, 1.530617e-002, 1.325960e-002, 9.504281e-003, 6.309550e-003, 3.435585e-003, -5.809704e-004, -3.145839e-003, -5.512608e-003, -5.307505e-003, 8.844249e-003, 2.070555e-002, 1.655378e-002, 6.048147e-003, 7.019616e-003, 2.399870e-002, 8.263561e-003, -8.154111e-003, 1.519355e-002, 1.952699e-002, 1.051341e-002, 1.032503e-002, 3.694898e-002, 4.047519e-002, 2.642611e-002, 2.204202e-002, 2.141434e-002, 9.264807e-003, -1.039248e-003, 2.349328e-003, 1.537319e-002, 2.722993e-002, 1.074010e-002, -1.393759e-002, -6.439260e-003, 1.637518e-002, 1.862788e-002, 5.724418e-003, -2.059734e-002, -1.506765e-002, -4.969379e-003, -4.088326e-003, 3.850981e-003, 9.599509e-003, 1.097958e-002, 9.631710e-003, 7.517615e-003, -9.623624e-004, -8.332362e-003, -1.128291e-002, -1.468497e-002, -1.816524e-002, -1.991098e-002, -2.088137e-002, -2.207214e-002, -2.603992e-002, -1.912432e-002, -1.768629e-002, -2.493481e-002, -1.669907e-002, 9.815728e-003, 3.534441e-002, 2.943695e-002, 1.187837e-002, 9.210432e-003, 1.420812e-002, 1.137837e-002, 4.602428e-003, 1.836240e-002, 3.075539e-002, 1.743645e-002, 1.506009e-002},
{-7.476262e-003, -9.304130e-003, -6.952649e-003, -1.751788e-002, -1.849142e-002, -1.178131e-003, 2.775477e-003, -6.252010e-003, -1.313272e-002, 1.503329e-003, 1.651537e-002, 1.092037e-002, -8.065524e-003, -2.181040e-002, -1.993149e-002, -1.107720e-002, -8.518244e-003, -9.117229e-003, -8.178341e-003, -8.642915e-003, -8.754130e-003, -2.040995e-003, 9.004800e-003, 1.988493e-002, 2.529260e-002, 2.090395e-002, 1.858032e-002, 1.351196e-002, 5.401796e-003, 1.661429e-003, 1.982145e-003, 4.311603e-003, 8.647784e-003, 1.625663e-002, 1.273137e-002, 9.445005e-004, -1.454676e-002, -2.108075e-002, -9.332658e-004, 3.115671e-004, -1.453940e-002, -6.057214e-003, 3.673292e-003, 4.154326e-003, 5.890920e-003, 4.103124e-003, 1.612081e-002, -2.479591e-003, -4.979179e-003, -1.322835e-002, -6.992445e-003, 1.208591e-002, 1.096910e-003, -1.506052e-002, -4.234178e-003, 1.808679e-002, 2.042371e-002, 2.446946e-003, -1.121922e-002, -6.618974e-003, 3.591652e-004, 1.292431e-004, -9.505353e-003, -2.342022e-002, -3.093658e-002, -2.416439e-002, -1.292311e-002, -3.195788e-003, 1.067545e-002, 1.988366e-002, 2.852598e-002, 2.594268e-002, 2.054525e-002, 1.770168e-002, 1.225064e-002, 2.703022e-003, -6.222841e-003, -1.105405e-002, -8.512326e-003, -3.946739e-003, 6.242739e-003, 5.969646e-003, -4.168720e-003, -8.510968e-003, -1.083244e-003, 9.739373e-003, -9.939205e-003, -1.865424e-002, 1.058140e-004, 1.403619e-002, -1.419278e-003, -2.077714e-003, 7.779586e-003, -8.064575e-003, -8.218494e-003, -9.216303e-003, -1.239874e-003, 1.484088e-003, -1.842352e-002, -2.067927e-002, 3.030423e-003, 8.548410e-003, -3.944853e-005, -9.696399e-004, 2.742361e-003, 7.763127e-003, -1.557467e-004, -9.549317e-003, -2.374778e-002, -3.208210e-002, -3.293993e-002, -2.345116e-002, -9.668440e-003, 1.727150e-003, 1.280838e-002, 1.951010e-002, 2.519051e-002, 2.261504e-002, 1.746840e-002, 1.295022e-002, 1.394000e-002, 1.355994e-002, 6.573996e-003, -4.075008e-003, -8.638228e-003, -8.542665e-004, 5.749067e-004, 8.366498e-003, 1.607566e-002, 9.013278e-003, 8.598979e-003, 1.233146e-002, 1.059724e-002, -9.728864e-003, -6.724163e-003, 1.293947e-002, 2.980467e-003, 1.035272e-003, 9.474261e-003, -8.727310e-003, -6.268991e-003, -9.010237e-003, -8.221073e-003, -1.371545e-002, -


© ISO/IEC 2004 — All rights reserved

Copyright International Organization for Standardization
Provided by IHS under license with ISO
No reproduction or networking permitted without license from IHS
Not for Resale

1.642066e-002, -7.049408e-003, -7.368994e-003, -1.072639e-002, -6.647753e-003, 5.750164e-003, 9.403866e-003, 2.449608e-003, -1.095057e-002, -1.832455e-002, -1.955811e-002, -2.183347e-002, -2.467075e-002, -2.572880e-002, -2.183444e-002, -9.707395e-003, 1.991314e-003, 1.306188e-002, 2.188414e-002, 1.868354e-002, 4.749248e-003, -7.850090e-003, -1.388677e-002, -1.033044e-002, -1.243567e-003, -2.991049e-003, -4.504661e-003, -5.166601e-003, -3.054750e-003, -3.238104e-003, 4.878606e-003, 1.311867e-002, 6.111349e-003, 7.224029e-003, 9.091045e-003, 8.922074e-003, 3.467897e-003, 1.097542e-002, 6.019658e-003, 5.803676e-003, 2.271319e-002, -9.218180e-004, 1.731340e-006, -2.643015e-003, -9.587971e-003, -1.058579e-002, -9.834655e-003, -1.565305e-002, -1.997189e-002, -9.625416e-003, 4.861771e-003, 1.825609e-002, 1.421856e-002, 7.135465e-003, 1.005164e-002, 3.529335e-003, -4.699372e-003, -1.385881e-002, -1.963194e-002, -1.716165e-002, -8.438838e-003, 4.865252e-003, 2.062135e-002, 3.696936e-002, 4.774215e-002, 4.398008e-002, 2.571747e-002, 4.367482e-003, -1.321389e-002, -1.874106e-002, -2.000516e-002, -1.394833e-002, -6.881200e-003, -4.805504e-005, -2.501232e-003, -4.523266e-003, -7.464477e-003, 2.066537e-003, 9.469114e-004, 4.586962e-003, 1.307986e-002, 7.202059e-003, 1.156896e-002, 1.099194e-002, 1.430388e-003, 5.905232e-003, 1.828095e-002, -1.641378e-003, 1.014684e-003, -9.197946e-003, -1.156501e-002, -7.618836e-003, -1.825700e-002, -1.778878e-002, -1.597629e-002, -8.274464e-003, 7.769623e-003, 1.454154e-002, 1.499770e-002, 1.798345e-002, 1.113545e-002, -1.015147e-003, -1.536548e-002, -2.557278e-002, -3.250530e-002, -2.924624e-002, -1.164992e-002, 1.335951e-002, 3.749418e-002, 6.174319e-002, 7.080632e-002, 6.087269e-002, 3.747407e-002, 1.182000e-002, -1.208814e-002, -2.544229e-002, -2.959437e-002, -3.262262e-002, -2.882543e-002, -1.830005e-002, -2.848045e-003, -4.241064e-003, -9.788654e-003, -9.717269e-003, -8.695987e-003, -1.033419e-003, 5.483061e-003, -5.384513e-003, -4.562413e-003, 1.217483e-002, 3.009650e-003, 3.542338e-003, 1.361833e-002, -5.641352e-003, 8.239932e-004, -1.210773e-002, -3.714825e-003, -1.386210e-002, -1.321338e-002, -6.964390e-003, -5.638204e-003, -5.227743e-003, 7.611027e-003, 1.296809e-002, 1.728287e-002, 1.092134e-002, 2.949934e-003, -1.198509e-002, -3.161396e-002, -4.647319e-002, -4.821129e-002, -4.019128e-002, -2.171309e-002, 1.088391e-002, 4.435414e-002, 7.112344e-002, 7.500666e-002, 5.536683e-002, 2.769334e-002, 1.775093e-003, -1.736785e-002, -3.090948e-002, -3.512718e-002, -3.101335e-002, -2.890700e-002, -2.541913e-002, -1.134619e-002, 3.215485e-003, 7.399654e-004, -3.086313e-003, -9.829110e-003, -5.737260e-003, 2.546929e-003, -6.307420e-003, -1.544713e-002, 5.973533e-003, 3.873006e-003, 4.707851e-003, 7.535876e-003, -5.194667e-003, 3.066462e-004, -5.736940e-003, -5.861411e-004, -1.517183e-002, 5.401577e-003, 2.705447e-003, -1.260743e-002, -8.209359e-003, 7.885437e-003, 1.416702e-002, 8.599212e-003, 4.766982e-003, -1.091165e-002, -2.500373e-002, -3.606985e-002, -4.051648e-002, -4.295329e-002, -3.405157e-002, -1.806878e-002, 8.138745e-003, 3.441533e-002, 5.108996e-002, 4.511160e-002, 2.232025e-002, -7.595495e-003, -3.164638e-002, -4.396993e-002, -4.759177e-002, -4.479005e-002, -2.909922e-002, -1.384247e-002, -7.852388e-003, -2.900880e-003, 6.394538e-003, 1.405843e-002, 6.841295e-003, -2.458108e-003, -8.474329e-003, -1.959005e-003, -7.132828e-003, -1.529203e-002, -4.030415e-003, 1.823221e-004, 3.322717e-003, 2.801983e-003, -9.468992e-003, 5.946188e-003, 4.380662e-003, -7.145428e-003, -2.732896e-003, 1.635057e-002, -9.885332e-005, -1.707757e-002, -3.146717e-003, 8.830331e-003, 7.572405e-003, 3.778693e-003, 3.065796e-003, -6.899589e-003, -6.877825e-003, -8.180143e-004, 1.717354e-003, -8.979399e-003, -1.148543e-002, -8.747371e-003, -4.594531e-006, 1.572911e-002, 1.854919e-002, 4.805772e-003, -1.721158e-002, -4.255425e-002, -6.152202e-002, -6.493604e-002, -6.219292e-002, -5.090485e-002, -3.091219e-002, -3.301991e-003, 1.494827e-002, 2.238159e-002, 1.572228e-002, 1.816745e-002, 1.281112e-002, 4.940834e-003, 1.009978e-003, -7.769836e-004, -2.451554e-003, -9.117395e-003, -5.457227e-003, 8.750315e-004, 2.429935e-004, -3.429616e-003, -7.208261e-003, 1.412806e-002, 6.161182e-003, -1.104407e-002, 1.595706e-002, 1.934846e-002, -8.888360e-003, -1.168408e-002, -8.532085e-004, 1.013043e-002, 4.235439e-003, 1.011848e-002, 1.731864e-002, 1.992325e-002, 3.950099e-002, 5.028201e-002, 5.203648e-002, 3.358058e-002, 1.267996e-002, -6.147046e-003, -1.434122e-002, -1.102282e-002, -8.203174e-003, -1.946567e-002, -3.491554e-002, -5.369693e-002, -6.271158e-002, -6.102768e-002, -5.480213e-002, -4.178984e-002, -2.056247e-002, 6.764675e-003, 2.961205e-002, 3.750685e-002, 2.597142e-002, 1.115098e-002, 5.560929e-003, 4.474256e-003, 1.251445e-002, 6.438292e-003, 1.060894e-003, -4.205117e-003, -1.008538e-002, 1.430632e-002, 1.384464e-003, -4.511527e-003, 8.106060e-003, 1.713669e-002, 3.676778e-003, -9.079170e-003, 2.406212e-002, 9.530938e-003, -5.725638e-003, -2.554611e-004, 7.579636e-003, 6.384126e-003, 2.833593e-003, 1.901151e-002, 3.168268e-002, 4.881615e-002, 6.044272e-002, 7.119222e-002, 6.944719e-002, 4.904436e-002, 1.572697e-002, -1.313998e-002, -2.737857e-002, -2.995320e-002, -2.084881e-002, -1.962854e-002, -2.629905e-002, -3.744964e-002, -4.162160e-002, -3.820690e-002, -2.705382e-002, -1.665885e-002, -1.745281e-003, 2.704204e-002, 4.503898e-002, 4.722643e-002, 3.132260e-002, 1.314220e-002, -1.041075e-004, 2.060937e-003, 1.015922e-002, 6.374352e-003, 5.608045e-003, 3.984564e-003, -8.641008e-003, 5.778356e-003, -2.172498e-003, 1.842139e-003, 1.339931e-002, 1.664845e-002, 5.022699e-003, 4.720979e-003, 2.100243e-002, -1.928955e-003, 9.058292e-004, 1.064506e-002, 9.966543e-003, 2.094091e-003, 6.604504e-003, 1.948861e-002, 2.736474e-002, 3.303855e-002, 4.165749e-002, 4.972547e-002, 4.536440e-002, 3.153261e-002, 2.028405e-003, -2.067383e-002, -3.270517e-002, -

© ISO/IEC 2004 — All rights reserved


Copyright International Organization for Standardization
Provided by IHS under license with ISO
No reproduction or networking permitted without license from IHS
Not for Resale

3.190620e-002, -1.628443e-002, -4.768045e-003, -1.524023e-003, -6.686464e-003, -8.019081e-003, -1.604667e-003, 8.297809e-003, 1.980956e-002, 3.266623e-002, 5.362623e-002, 6.299379e-002, 5.606713e-002, 3.257710e-002, 6.939660e-003, -2.000546e-003, 5.616829e-004, 8.315588e-003, 1.013833e-002, 7.556840e-003, 6.768611e-003, -3.300099e-003, 1.908558e-003, -8.807508e-003, 7.413716e-003, 1.874605e-002, 1.402769e-002, 4.892487e-003, 1.534253e-002, 1.323780e-002, -3.086952e-003, 8.297295e-003, 1.283219e-002, 3.551941e-003, -1.908484e-003, 3.046034e-003, 9.041995e-003, 3.442378e-003, -2.659985e-003, 1.031235e-003, 6.615439e-003, 7.204944e-003, 3.701454e-004, -1.941260e-002, -3.587215e-002, -4.392703e-002, -3.867757e-002, -1.547808e-002, 7.934105e-003, 1.670376e-002, 2.180470e-002, 2.324699e-002, 2.612522e-002, 3.450998e-002, 4.642727e-002, 6.162760e-002, 7.149814e-002, 7.340450e-002, 6.050387e-002, 2.857381e-002, -3.659071e-003, -1.130424e-002, -3.588045e-003, 2.905027e-003, 9.491621e-003, -1.181741e-003, -1.751599e-003, 1.301499e-003, 2.742347e-003, -1.426241e-002, 9.425044e-003, 1.978975e-002, 1.734107e-002, 1.144791e-002, 2.030702e-002, 2.050638e-003, -5.582522e-003, 6.020911e-003, 5.137582e-003, -7.127063e-003, -1.081187e-002, -5.659183e-003, -9.164586e-003, -1.783031e-002, -2.361380e-002, -2.067986e-002, -1.808411e-002, -1.157433e-002, -1.456642e-002, -3.036757e-002, -4.606076e-002, -5.049016e-002, -4.212641e-002, -1.743323e-002, 9.897559e-003, 2.368066e-002, 3.235711e-002, 3.620880e-002, 3.504903e-002, 3.674300e-002, 4.929661e-002, 5.904224e-002, 6.024668e-002, 5.875663e-002, 4.446844e-002, 1.583708e-002, -1.292871e-002, -1.754784e-002, -7.486209e-003, 1.000776e-003, 8.562459e-003, -1.071882e-002, -9.511293e-003, 9.535678e-004, 1.164734e-004, -1.791343e-002, 1.782035e-002, 2.048258e-002, 1.924982e-002, 8.840669e-003, 1.927551e-002, -1.710398e-003, -5.922737e-003, 1.126982e-003, -7.282241e-003, -1.993369e-002, -1.768537e-002, -1.653328e-002, -2.553824e-002, -2.834446e-002, -2.395458e-002, -1.828350e-002, -8.569673e-003, 2.445972e-003, 9.794389e-004, -1.132893e-002, -2.523702e-002, -3.359600e-002, -2.657179e-002, -1.460820e-002, 3.980657e-003, 2.195052e-002, 2.818215e-002, 2.946086e-002, 3.014653e-002, 2.329749e-002, 2.353626e-002, 2.709019e-002, 2.730552e-002, 2.562650e-002, 1.873422e-002, -1.379621e-003, -2.882654e-002, -2.794325e-002, -1.203997e-002, -5.853053e-003, 5.365281e-003, -1.545508e-002, -1.819314e-002, 3.689010e-003, -6.221005e-003, -1.837085e-002, 1.173885e-002, 1.206051e-002, 1.318326e-002, 1.619070e-003, 1.286944e-002, -1.249050e-003, -1.150585e-002, -6.122393e-003, -1.679934e-002, -2.872225e-002, -2.539562e-002, -2.698910e-002, -3.013693e-002, -2.479398e-002, -1.596439e-002, -5.108156e-003, 9.459559e-003, 2.229657e-002, 2.048679e-002, 9.687361e-003, -7.921177e-003, -1.937644e-002, -1.699070e-002, -1.096836e-002, -4.773178e-004, 1.488430e-002, 2.315514e-002, 2.111863e-002, 1.830798e-002, 1.020567e-002, 3.722168e-003, -4.018031e-003, -1.081260e-002, -1.009843e-002, -4.595134e-003, -1.589008e-002, -3.820134e-002, -3.631459e-002, -1.900937e-002, -1.185340e-002, -2.380215e-003, -6.975974e-003, -1.638573e-002, -7.555886e-003, -7.425720e-003, -1.432202e-002, 5.235451e-003, -2.509693e-008, 4.041723e-003, -7.155872e-003, 3.709617e-003, 5.638386e-003, -7.657537e-003, -6.404320e-003, -2.213723e-002, -3.040269e-002, -2.661938e-002, -2.623303e-002, -2.475049e-002, -2.357311e-002, -1.318491e-002, 6.469974e-003, 2.525475e-002, 3.309287e-002, 3.182713e-002, 1.696174e-002, -3.036831e-004, -1.189061e-002, -1.530973e-002, -1.457301e-002, -8.807938e-003, 1.527245e-003, 1.043813e-002, 6.953199e-003, 2.246415e-003, -6.103208e-003, -1.374796e-002, -2.514506e-002, -3.471786e-002, -3.742469e-002, -2.869939e-002, -2.995104e-002, -4.292824e-002, -3.496481e-002, -1.709890e-002, -1.132906e-002, -7.978814e-003, -2.465617e-006, -9.615383e-003, -1.265453e-002, -1.070209e-002, -5.976556e-005, -2.634364e-003, -1.393606e-002, -8.842288e-003, -1.516359e-002, -5.471111e-003, 7.350666e-003, 3.214577e-003, -1.878134e-003, -1.858065e-002, -2.163912e-002, -8.929514e-003, -1.206497e-002, -1.905820e-002, -2.665657e-002, -1.699882e-002, 1.527782e-003, 2.098315e-002, 3.714589e-002, 4.083158e-002, 2.617169e-002, 6.472756e-003, -1.037845e-002, -2.454838e-002, -2.898418e-002, -2.746383e-002, -1.575828e-002, 3.459096e-003, 1.372023e-002, 1.138558e-002, 1.917601e-003, -1.419022e-002, -3.252609e-002, -4.629290e-002, -5.315883e-002, -4.140296e-002, -3.393058e-002, -3.639909e-002, -2.554926e-002, -9.287296e-003, -4.414843e-004, -1.223026e-002, 1.538197e-004, -3.187654e-004, -1.530925e-002, -1.745450e-002, 1.509977e-002, -9.625795e-003, -2.184370e-002, -9.611808e-003, -2.194783e-002, -1.152364e-002, 6.017268e-003, 1.091714e-002, 1.169757e-002, -8.653705e-003, -4.029228e-003, 1.446600e-002, 4.041641e-003, -2.275274e-002, -3.737256e-002, -4.034219e-002, -3.506336e-002, -1.867867e-002, 1.185705e-002, 3.679037e-002, 3.530796e-002, 1.664024e-002, -1.404946e-002, -3.743439e-002, -4.499504e-002, -3.847928e-002, -1.100243e-002, 2.761164e-002, 5.321576e-002, 4.725461e-002, 2.669238e-002, -8.477170e-003, -4.207438e-002, -5.764865e-002, -5.219627e-002, -3.593772e-002, -2.103287e-002, -1.490812e-002, -1.170130e-002, 6.544192e-003, 1.389305e-002, -8.769323e-003, 1.789612e-003, 7.031250e-003, -1.556639e-002, -1.821821e-002, 2.046068e-002, -9.938438e-003, -2.422218e-002, -6.963013e-003, -1.939243e-002, -1.443214e-002, 9.316883e-003, 1.766381e-002, 2.296016e-002, 3.195801e-003, 1.896674e-002, 3.886411e-002, 1.644955e-002, -5.678978e-004, -7.382967e-005, -6.750730e-003, -7.564840e-003, -3.762143e-003, 1.716443e-002, 3.973575e-002, 5.479565e-002, 3.766718e-002, -2.624395e-004, -2.483726e-002, -3.286327e-002, -1.504857e-002, 2.757389e-002, 6.798664e-002, 7.076157e-002, 3.764819e-002, 4.105985e-003, -2.793049e-002, -3.990943e-002, -2.916648e-002, -6.556882e-003, 8.679902e-003, 1.295892e-002, 1.772286e-002, 5.962809e-003,


© ISO/IEC 2004 — All rights reserved

Copyright International Organization for Standardization
Provided by IHS under license with ISO
No reproduction or networking permitted without license from IHS
Not for Resale

1.820372e-002, 2.298524e-002, -7.806125e-004, 5.922338e-003, 1.297078e-002, -7.061846e-003, -8.219249e-003, 2.445383e-002, -7.049090e-003, -2.173215e-002, -4.624815e-003, -1.298023e-002, -8.306176e-003, 7.571671e-003, 1.638120e-002, 2.763140e-002, 2.504116e-002, 3.458915e-002, 3.552415e-002, 2.379438e-002, 1.782065e-002, 2.377954e-002, 2.760474e-002, 2.885758e-002, 3.396447e-002, 4.647725e-002, 6.338762e-002, 7.996905e-002, 6.807897e-002, 3.022622e-002, 2.972032e-003, -7.611042e-003, 9.037251e-003, 4.959764e-002, 5.871736e-002, 2.632351e-002, 2.635622e-003, -6.382502e-003, -3.676077e-003, 1.028655e-002, 2.798052e-002, 4.383415e-002, 5.777536e-002, 5.354565e-002, 4.104502e-002, 2.110308e-002, 1.839482e-002, 2.819617e-002, 1.894238e-003, 8.822105e-003, 2.310695e-002, 5.948795e-003, 7.026874e-003, 2.628319e-002, 1.976583e-002, -7.110298e-003, 5.963927e-003, 2.263501e-003, -2.955045e-003, 1.072502e-002, 8.353883e-003, 2.806188e-002, 2.533849e-002, 1.343173e-002, 2.129938e-002, 1.056848e-002, 8.984908e-003, 1.285391e-002, 1.127875e-002, 1.346654e-002, 2.522736e-002, 4.005432e-002, 5.126667e-002, 7.251469e-002, 7.760123e-002, 4.493800e-002, 1.524816e-002, -1.370999e-003, 2.140090e-002, 5.147408e-002, 3.782798e-002, 6.432648e-003, 9.848579e-003, 1.335042e-002, 1.652190e-002, 2.112002e-002, 2.317453e-002, 2.352445e-002, 2.455090e-002, 2.913613e-002, 3.617068e-002, 1.408244e-002, 1.912745e-003, 1.773964e-002, -5.564409e-003, 9.178051e-003, 2.771027e-002, 9.257291e-003, 1.317539e-002, 2.884905e-002, 2.565220e-002, 6.933787e-003, 1.769704e-002, 1.794715e-002, 1.693956e-003, 5.574259e-003, -1.117897e-003, 1.354442e-002, -9.490945e-003, -1.881939e-002, -3.106198e-002, -3.196479e-002, -3.093631e-002, -2.872824e-002, -3.836245e-002, -3.318216e-002, -2.188639e-002, -9.473869e-003, 1.403087e-002, 3.637501e-002, 4.074298e-002, 2.523577e-002, 4.770768e-003, -6.937125e-003, 1.841215e-002, 4.606277e-002, 9.904468e-003, -9.447942e-003, -1.225976e-002, -3.745826e-003, -8.453390e-003, -2.596773e-002, -3.298840e-002, -2.771502e-002, -2.247479e-002, -2.518658e-002, -4.173591e-003, -6.846657e-003, -2.785926e-002, -1.184145e-002, -1.247213e-002, 2.025253e-003, 1.187770e-002, 1.519355e-003, 2.234455e-002, 2.186344e-002, 2.820103e-002, 1.736580e-002, 2.577283e-002, 3.676124e-002, 1.848127e-002, 5.088003e-004, -1.008619e-002, -1.714862e-002, -3.491545e-002, -3.760023e-002, -5.104012e-002, -4.994262e-002, -2.067173e-002, 7.268247e-003, 2.460164e-002, 1.770119e-002, -5.738032e-003, -4.177226e-002, -3.194895e-002, -5.609024e-003, -2.439221e-004, -1.745324e-002, -4.627208e-002, -4.546107e-002, -1.392248e-002, 1.826257e-002, -1.701227e-002, -3.543287e-002, -2.950719e-002, 1.871181e-003, 4.955537e-003, -1.239751e-002, -3.605521e-002, -3.587459e-002, -5.032796e-002, -6.250690e-002, -5.007047e-002, -3.400883e-002, -3.471349e-002, -2.655795e-002, -2.269120e-002, -1.193167e-002, -7.843770e-003, -9.122061e-003, -8.508300e-004, -5.429953e-003, 1.938452e-003, 2.412380e-002, 2.188572e-002, 3.960545e-002, 2.568759e-002, 7.951881e-004, -1.728434e-002, -1.159358e-002, -1.469104e-002, -5.622238e-003, -3.407806e-003, -1.681722e-003, 2.255628e-002, 1.358498e-002, -4.101887e-003, 7.399000e-003, -4.167147e-002, -8.321315e-002, -5.735238e-002, -3.881690e-002, -2.818523e-002, -3.902611e-002, -4.581836e-002, -4.268305e-002, -3.293803e-002, -8.532116e-003, -3.358421e-002, -4.472377e-002, -5.553546e-002, -1.198082e-002, 2.751849e-002, 1.738603e-002, 1.042755e-002, 2.765069e-002, -7.388170e-003, -5.077846e-002, -4.694174e-002, -1.099713e-002, -1.025091e-002, -1.451227e-002, -1.408354e-002, -1.422948e-002, -1.518537e-002, -9.150448e-003, -1.124036e-002, -2.392697e-002, -4.116364e-003, 1.689326e-002, 1.432928e-003, 1.050946e-002, 1.701620e-002, -4.067982e-003, -1.880510e-002, -1.292976e-002, -9.954162e-003, 9.447045e-003, 1.696651e-002, 1.039389e-002, 1.487910e-002, 7.867205e-003, -5.246768e-003, -2.659428e-002, -5.500296e-002, -6.357984e-002, -5.184438e-002, -3.830183e-002, -4.290968e-002, -3.533853e-002, -1.527270e-002, -1.527823e-002, -2.415440e-002, -2.289151e-002, -3.013934e-002, -4.140191e-002, -4.814671e-002, -4.682513e-002, -2.421528e-002, -1.534334e-003, 1.176765e-002, 4.244698e-002, 3.224066e-002, 4.010152e-003, -1.346745e-002, 8.004332e-003, 6.908896e-003, -4.572216e-003, -2.204781e-003, -1.207295e-002, -1.423864e-002, -9.749502e-003, -1.928445e-002, -3.290478e-002, -7.159600e-003, 2.902058e-003, -2.388999e-002, -1.424930e-002, 5.026962e-003, -7.376246e-003, -1.728341e-002, -2.120428e-002, -1.729711e-002, 1.086811e-002, 1.262807e-002, -4.686127e-003, -1.325334e-002, -9.208013e-003, -9.334634e-003, -1.530099e-002, -2.182602e-002, -1.244169e-002, -5.266690e-004, -1.793296e-003, -2.997122e-002, -1.740840e-002, 7.674720e-003, 1.052559e-002, -4.384370e-003, -2.855690e-002, -8.285065e-003, 3.585481e-004, -2.961059e-003, -2.053734e-002, -2.614700e-002, -1.725793e-002, -7.487942e-003, 2.785545e-003, 2.539742e-003, -5.116252e-003, -4.932728e-003, 1.597623e-002, 1.697506e-003, -9.896142e-003, -3.358149e-004, -7.849909e-003, -8.316351e-003, 1.813906e-005, -5.059199e-003, -2.777083e-002, -1.230294e-002, -1.323076e-002, -3.902806e-002, -1.996084e-002, 2.806074e-004, -1.574995e-002, -8.864901e-003, -1.508007e-002, -1.381591e-002, 9.520011e-003, 9.556608e-003, -1.271099e-002, -2.189574e-002, -1.671720e-002, -1.141947e-002, -6.144563e-003, 2.006074e-003, 1.666303e-002, 2.015302e-002, 5.202725e-003, -1.594031e-002, 5.193911e-003, 2.736105e-002, 2.518905e-002, 1.687477e-002, -1.004910e-002, -7.263643e-003, 2.595916e-002, 2.541571e-002, 1.045271e-002, -3.440138e-003, -9.826353e-003, -9.855982e-003, -9.986970e-003, -1.078866e-002, -1.779261e-002, -4.596688e-003, 1.170972e-002, 5.968809e-003, -4.936448e-003, 1.075669e-002, -8.130336e-004, -8.795478e-004, 8.082299e-003, 1.695905e-002, -8.424957e-003, -1.822712e-002, -1.545564e-002, -3.833511e-002, -2.110334e-002, -1.048074e-002, -1.654010e-002, -5.314001e-004, -2.257994e-003, -

© ISO/IEC 2004 — All rights reserved


Copyright International Organization for Standardization
Provided by IHS under license with ISO
No reproduction or networking permitted without license from IHS
Not for Resale

4.307058e-003, 5.683163e-003, 9.430386e-003, -1.067444e-002, -2.178332e-002, -1.498473e-002, -6.099770e-003, 5.057112e-003, 1.425649e-002, 1.809381e-002, 9.971380e-003, -8.134893e-003, -8.784980e-003, 3.233552e-002, 3.973960e-002, 2.722091e-002, 2.601164e-002, 1.408070e-002, -2.105755e-002, 3.748005e-003, 2.748903e-002, 2.244816e-002, 9.813561e-003, 2.049446e-003, -4.397881e-003, -7.650189e-003, -8.211902e-003, -9.545842e-003, -2.860407e-003, 5.976893e-003, 9.598591e-003, 5.314716e-003, 2.352380e-002, 8.210766e-003, 7.741116e-003, 1.962146e-002, 3.546121e-002, -5.015140e-003, -1.644809e-002, -1.173038e-002, -2.153263e-002, -1.554507e-002, -1.732599e-002, -2.763160e-002, 2.964946e-003, 5.766234e-003, 5.501228e-003, 5.166474e-003, 1.402755e-002, 2.820468e-003, -9.687227e-003, -7.438218e-003, -1.716958e-004, 5.940610e-003, 6.234855e-003, -2.289648e-003, -2.340290e-002, -2.732929e-002, 8.079625e-003, 3.874350e-002, 3.062875e-002, 1.500432e-002, 2.269102e-002, 2.386465e-002, -1.262096e-002, -3.901571e-002, -1.361872e-002, 1.303696e-002, 1.715000e-002, 1.426046e-002, 7.903272e-003, 3.664834e-003, 1.733116e-003, -2.144482e-003, 2.313990e-003, 1.046826e-002, 1.325705e-002, 1.381443e-002, 2.389097e-002, 1.974993e-002, 1.727242e-002, 1.565924e-002, 4.313144e-002, 6.455934e-003, -2.379193e-002, -6.543146e-003, -8.568345e-003, -1.265836e-002, -1.584127e-002, -3.115905e-002, 3.832344e-003, 1.079969e-002, 1.001408e-002, 1.169102e-002, 1.743101e-002, 1.552971e-002, 9.821028e-003, 1.122121e-002, 7.386080e-003, 1.810642e-003, -8.181372e-003, -2.687823e-002, -4.683674e-002, -1.891504e-002, 2.695992e-002, 3.212967e-002, 1.452157e-002, -9.462656e-003, -9.988405e-003, 5.615400e-003, -3.313377e-004, -3.875935e-002, -5.842950e-002, -3.145282e-002, -9.154453e-003, 3.343766e-003, 1.036960e-002, 1.292572e-002, 1.250141e-002, 1.165355e-002, 1.120499e-002, 1.487716e-002, 1.119316e-002, 9.560798e-003, 1.979191e-002, 2.261929e-002, 1.026552e-002, 3.440051e-003, 3.356466e-002, 1.573833e-002, -2.347314e-002, -1.595320e-003, 4.747535e-003, -3.186403e-004, -6.188262e-003, -1.708911e-002, -2.329302e-003, 1.269533e-002, 8.997720e-003, 1.890063e-002, 2.917261e-002, 3.027527e-002, 2.426989e-002, 1.832164e-002, 6.735917e-003, -4.558291e-003, -1.719799e-002, -3.677273e-002, -4.075589e-002, 4.751902e-003, 2.719004e-002, 2.183546e-002, 6.283688e-003, -2.648166e-002, -3.644427e-002, -2.210168e-002, -3.691669e-003, -1.914249e-002, -5.539704e-002, -4.470021e-002, -2.238185e-002, -1.758180e-003, 1.504883e-002, 2.969131e-002, 3.632323e-002, 3.410848e-002, 2.119633e-002, 1.179300e-002, 1.655999e-003, 5.173949e-003, 1.312711e-002, 1.240220e-002, -9.510925e-003, -1.038523e-002, 1.909333e-002, -8.142881e-003, -2.312768e-002, 9.873022e-003, 1.705358e-002, 1.169632e-002, 9.274905e-003, 5.826007e-003, -6.973959e-004, 1.139009e-002, 8.203956e-003, 1.881817e-002, 3.535314e-002, 4.193693e-002, 3.999355e-002, 3.596554e-002, 2.468617e-002, 1.183743e-002, -9.331241e-003, -3.566669e-002, -2.580951e-002, 7.521981e-003, 1.841636e-002, 2.610231e-002, 1.294056e-002, -1.889911e-002, -3.354473e-002, -1.986754e-002, -9.935882e-003, -7.295943e-003, -2.081866e-002, -1.612210e-002, -8.847970e-003, 9.669407e-003, 3.196354e-002, 4.754671e-002, 5.743793e-002, 4.229425e-002, 2.128758e-002, 6.713521e-003, -3.923737e-003, -2.447310e-003, -8.239008e-004, -2.311379e-003, -2.497828e-002, -1.346196e-002, 1.657276e-002, -2.547204e-002, -1.986540e-002, 9.229032e-003, 2.116217e-002, 2.641237e-002, 2.255690e-002, 2.963119e-002, 1.082023e-002, 1.884834e-002, 9.570394e-003, 1.548321e-002, 3.398667e-002, 4.188100e-002, 4.637995e-002, 4.548071e-002, 3.660837e-002, 1.561419e-002, -1.257799e-002, -2.595585e-002, -1.496638e-002, -1.006064e-002, 5.157005e-003, 2.641724e-002, -1.781797e-003, -2.594667e-002, -3.955089e-002, -1.266305e-002, -1.481093e-002, -9.849865e-003, 7.715535e-003, 7.292536e-003, 4.890595e-003, 1.511190e-002, 3.887712e-002, 5.346950e-002, 5.759744e-002, 3.620703e-002, 2.132735e-002, 1.280580e-003, -9.423522e-003, -1.387652e-002, -7.484133e-003, -6.820907e-003, -2.648679e-002, -4.198604e-003, 1.225963e-002, -2.852787e-002, -1.350557e-002, 6.859809e-003, 1.503512e-002, 2.588948e-002, 2.709544e-002, 3.245427e-002, 1.620190e-002, 1.612566e-002, 6.410413e-003, 5.314636e-003, 2.523470e-002, 3.313313e-002, 3.814611e-002, 3.910861e-002, 2.547053e-002, 2.899376e-003, -1.353812e-002, -8.743649e-003, -1.014308e-002, -1.820553e-002, -1.098382e-002, -6.480839e-003, -1.981730e-002, -3.079444e-002, -3.610002e-002, -2.182696e-002, -3.462102e-003, -3.880714e-003, 1.532425e-002, 1.886580e-002, 9.291998e-003, 1.147344e-002, 2.356462e-002, 4.112486e-002, 4.268521e-002, 2.267930e-002, 1.302445e-002, -6.249900e-003, -1.495042e-002, -2.319359e-002, -1.938011e-002, -1.906850e-002, -1.817694e-002, 3.996763e-003, 1.130300e-002, -2.553372e-002, -5.036373e-003, 9.285470e-004, 2.939141e-003, 4.417167e-003, 5.679439e-003, 1.451652e-002, 3.188999e-003, 5.578082e-003, 5.166694e-004, -7.058634e-003, 1.367114e-002, 1.882950e-002, 1.884684e-002, 1.580648e-002, 2.784467e-003, -7.789860e-003, 3.262045e-004, 5.167645e-003, -5.447122e-003, -7.263223e-003, -2.138780e-004, 3.070740e-003, -5.384709e-003, -4.058620e-003, 8.041627e-003, 6.565186e-003, 1.675781e-002, 1.952918e-002, 1.965759e-002, 2.101596e-002, 9.345509e-003, 1.181641e-003, 5.882307e-003, 2.049317e-002, 2.243160e-002, 1.079608e-002, 1.151349e-003, -1.471548e-002, -1.287724e-002, -1.961371e-002, -2.449496e-002, -2.106595e-002, -8.468792e-003, 8.205663e-003, 2.964938e-003, -1.990869e-002, 1.024651e-002, -2.473282e-003, -1.212266e-002, -1.069460e-002, -1.065322e-002, -8.645798e-003, -7.739827e-003, -4.160381e-003, 4.479991e-003, -1.431003e-002, -3.083606e-003, 1.062391e-003, -3.730824e-003, -6.435111e-003, -8.413947e-003, 1.002461e-004, 1.410573e-002, 1.401128e-002, 1.085897e-002, 1.572066e-002, 2.477513e-002, 2.573217e-002, 2.069271e-002, 3.031994e-002,


© ISO/IEC 2004 — All rights reserved

Copyright International Organization for Standardization
Provided by IHS under license with ISO
No reproduction or networking permitted without license from IHS
Not for Resale

2.958051e-002, 2.236527e-002, 2.531856e-002, 3.188529e-002, 2.678594e-002, 1.971453e-002, 9.890798e-003, -9.362843e-003, -9.594758e-003, 4.231715e-004, 1.908678e-003, 4.472752e-004, -7.958770e-003, -1.230466e-002, -7.864136e-003, -1.617759e-002, -2.117982e-002, -1.853803e-002, -1.212587e-003, 8.414809e-003, 1.800330e-004, -1.690922e-002, 2.473076e-002, 6.403578e-003, -1.262807e-002, -1.065797e-002, -1.654922e-002, -1.119941e-002, -1.537313e-002, -8.211861e-003, 6.539356e-003, -1.744189e-002, -1.356038e-002, -9.419228e-003, -2.005584e-002, -1.594347e-002, -6.679209e-003, 1.205686e-002, 2.465965e-002, 2.095829e-002, 1.195250e-002, 1.192015e-002, 1.313399e-002, 1.938155e-002, 2.962117e-002, 3.565347e-002, 2.424332e-002, 1.595698e-002, 1.837148e-002, 2.686566e-002, 2.659626e-002, 1.871782e-002, 1.009317e-002, -1.128132e-002, -2.421457e-002, -1.469892e-002, -7.081603e-003, -7.928973e-003, -8.075102e-003, -5.796585e-003, -7.250423e-003, -1.738651e-002, -1.556407e-002, -8.016810e-003, 7.527297e-003, 7.373019e-003, 3.309453e-003, -1.091341e-002, 3.286659e-002, -3.531183e-003, -7.400588e-003, -4.911026e-003, -1.098348e-002, -1.566276e-002, -2.343545e-002, -1.427674e-002, 6.116773e-003, -8.557458e-003, -1.965486e-002, -1.044469e-002, -2.630553e-002, -1.832715e-002, -3.601832e-003, 1.131235e-002, 1.405937e-002, 7.051660e-004, -1.678947e-002, -2.110955e-002, -8.626540e-003, -2.420153e-003, 3.846480e-003, 8.205989e-003, 1.039850e-002, 7.736010e-003, 9.082082e-003, 1.821327e-002, 2.039720e-002, 1.024121e-002, -5.996958e-003, -2.002422e-002, -3.366542e-002, -2.320717e-002, -8.866099e-003, -7.635650e-003, -3.363919e-003, 5.502435e-003, -4.027566e-003, -3.632722e-003, -1.170704e-002, -6.178498e-003, 7.359178e-003, 3.802963e-003, -1.602845e-003, -1.088328e-002, 3.699028e-002, 2.930569e-003, -1.263306e-003, -9.326290e-004, 1.221075e-003, -3.672609e-003, -2.070012e-002, -1.371657e-002, 8.380282e-003, 5.868002e-003, -1.617144e-002, -5.638126e-003, -2.088716e-002, -1.593916e-002, -1.497094e-003, 7.175028e-003, -4.344905e-004, -7.456553e-003, -9.239758e-003, -1.051032e-002, 6.318677e-004, -2.329474e-003, -1.082251e-003, -5.151530e-003, -5.729486e-003, 2.564324e-003, 1.701224e-002, 2.948088e-002, 3.466162e-002, 2.648862e-002, 4.664905e-004, -1.679423e-002, -3.362397e-002, -2.512875e-002, -7.245413e-003, -2.055593e-003, 1.382313e-003, 1.707242e-002, 1.348300e-002, 1.225508e-002, -3.291070e-003, -2.808024e-003, 6.062133e-004, -2.177617e-003, -1.548178e-002, -6.112379e-003, 3.413083e-002, 2.979160e-003, 7.595266e-003, 3.552960e-003, 7.377769e-003, 4.786290e-003, -1.191518e-002, -1.898191e-002, 3.403532e-003, 1.465005e-002, -1.843927e-003, -3.125341e-003, -1.009698e-002, -1.549457e-002, -6.291074e-003, -6.499611e-004, 1.403371e-002, 2.408316e-002, 1.858625e-002, 1.287065e-002, 1.678324e-002, 1.590492e-002, 1.831742e-002, 7.048536e-003, 7.765665e-004, 4.810778e-004, 9.324644e-003, 2.370122e-002, 3.711485e-002, 4.238423e-002, 1.797936e-002, -1.501026e-002, -3.530278e-002, -2.416448e-002, -3.184282e-003, 2.233482e-003, 7.315170e-003, 1.344537e-002, 2.336309e-002, 2.372722e-002, 1.155008e-003, -6.076576e-003, -9.003057e-003, -5.486662e-003, -1.276393e-002, 2.540737e-003, 2.376794e-002, -2.845431e-003, 1.695075e-002, 8.170248e-003, 2.214762e-003, -3.587827e-003, -1.182366e-002, -2.583146e-002, -5.899580e-003, 1.560851e-002, 1.975337e-003, -2.869006e-003, -8.628136e-004, -1.862404e-002, -1.792178e-002, -2.937397e-003, 1.164977e-002, 1.470756e-002, 9.640460e-003, 1.776606e-003, -4.464346e-003, -7.140356e-003, -1.263733e-003, -3.787997e-003, -8.304335e-003, -1.543446e-002, -1.243104e-002, -1.566451e-003, 2.383366e-004, 1.053724e-002, 1.446235e-002, -1.062250e-002, -2.880225e-002, -1.785911e-002, 4.049961e-003, 7.432204e-003, 8.605620e-003, 4.831800e-003, 1.852481e-002, 2.463830e-002, 8.256542e-003, -6.763291e-003, -8.276505e-003, 6.551380e-003, -3.363095e-003, 1.337966e-002, 1.048415e-002, -1.393738e-002, 1.406357e-002, 1.150266e-002, 1.250034e-003, -1.515477e-002, -1.647710e-002, -2.277912e-002, -1.149699e-002, 8.076547e-003, -9.782500e-003, -4.397774e-003, 4.179050e-003, -9.125122e-003, -1.980818e-002, -1.273105e-002, -7.459329e-003, -8.870122e-003, -7.945289e-003, -2.897939e-003, 6.023272e-003, 2.001773e-002, 3.252810e-002, 3.364153e-002, 2.627879e-002, 1.089278e-002, -1.116046e-002, -2.924436e-002, -3.046497e-002, -2.179387e-002, -4.496375e-003, -1.561865e-002, -2.934341e-002, -1.745663e-002, 5.032878e-003, 1.290712e-002, 8.914878e-003, -8.561494e-003, -8.383053e-004, 2.822502e-004, 6.944031e-003, 2.227563e-003, 3.880151e-003, 1.667890e-002, 7.172840e-003, 1.919622e-002, 3.342455e-003, -2.520850e-002, 6.016103e-003, 8.346204e-003, 5.470655e-004, -1.574166e-002, -1.365862e-002, -9.437190e-003, -1.034759e-002, -2.419666e-003, -2.273348e-002, -1.067776e-002, 7.310694e-003, -3.930409e-003, -2.472296e-002, -2.649794e-002, -2.334811e-002, -2.354856e-002, -2.520968e-002, -1.512259e-002, 2.109171e-003, 1.571210e-002, 2.982154e-002, 3.468616e-002, 2.291028e-002, 4.742268e-003, -1.297835e-002, -2.172344e-002, -3.160598e-002, -2.825888e-002, -1.305842e-002, -1.726878e-002, -2.868488e-002, -1.718828e-002, -7.902877e-004, 8.552230e-003, -2.108394e-003, -1.491242e-002, -1.012464e-002, -6.200299e-003, -1.401591e-003, -4.324250e-004, 6.386069e-003, 1.625850e-002, 9.534434e-004, 1.273962e-002, -1.356489e-003, -3.119100e-002, -6.099805e-003, 6.765603e-003, -1.077689e-003, -1.227999e-002, -6.022545e-003, 1.768767e-002, 5.825475e-003, -3.953126e-003, -1.972782e-002, -2.368790e-002, 3.104376e-003, 4.161494e-003, -1.343012e-002, -2.557018e-002, -2.667452e-002, -2.831238e-002, -2.698331e-002, -1.858208e-002, -2.747558e-003, 1.332864e-002, 2.331497e-002, 1.838112e-002, 5.838320e-003, -6.457426e-003, -1.636938e-002, -2.303056e-002, -2.637964e-002, -1.775793e-002, -1.330996e-002, -1.841490e-002, -2.817605e-002, -2.078005e-002, -1.711875e-003, 4.538925e-003, -1.008616e-002, -1.621935e-002, -1.549260e-002, -1.887015e-002, -

© ISO/IEC 2004 — All rights reserved


Copyright International Organization for Standardization
Provided by IHS under license with ISO
No reproduction or networking permitted without license from IHS
Not for Resale

2.173591e-002, -7.525768e-003, -2.993935e-003, 3.674171e-003, -1.434130e-002, 1.213673e-003, 6.289469e-004, -3.779178e-002, -1.668953e-002, 6.639200e-003, 9.886856e-003, -3.604703e-003, 1.132694e-002, 3.098555e-002, 2.242670e-002, 1.995819e-004, -1.055899e-002, -1.576725e-002, 1.366866e-003, 1.173063e-002, 6.168664e-003, -4.986692e-003, -1.473685e-002, -1.906797e-002, -1.649741e-002, -9.500736e-003, 9.100181e-003, 2.568537e-002, 3.151035e-002, 2.098107e-002, 7.455148e-003, -3.512070e-003, -1.348878e-002, -1.984833e-002, -1.699409e-002, -7.554187e-003, -6.632890e-003, -1.469006e-002, -2.193785e-002, -1.216570e-002, 6.560703e-003, 1.573842e-002, -6.634300e-003, -8.216846e-003, -2.652766e-003, -1.413521e-002, -2.100446e-002, -2.452767e-003, 1.602578e-003, 1.179907e-003, -1.724947e-002, 4.447520e-004, 1.481069e-002, -2.664422e-002, -8.276253e-003, 7.105279e-003, 6.253119e-003, -6.223120e-003, 1.004463e-002, 2.757671e-002, 1.955397e-002, -3.107684e-003, 2.949947e-003, -3.915905e-003, 3.351542e-004, 8.892864e-003, 1.365174e-002, 1.392263e-002, 4.981820e-003, -8.138474e-003, -1.410479e-002, -8.733001e-003, 4.298770e-003, 1.381433e-002, 1.473353e-002, 8.096588e-003, 1.046313e-003, -5.545334e-003, -1.191449e-002, -1.675534e-002, -1.085211e-002, -1.694163e-003, -9.563464e-004, -1.173838e-002, -1.394350e-002, -7.203672e-003, 1.840580e-002, 2.502260e-002, -7.749853e-004, -3.531196e-004, 5.743680e-003, -7.685596e-003, -1.124611e-002, 2.613634e-003, 2.848525e-003, 6.104452e-003, -1.448514e-002, 3.877398e-003, 2.836006e-002, -1.484217e-002, -5.087765e-003, -7.131267e-003, -1.307198e-002, -1.617180e-002, -7.395046e-004, 1.056356e-002, 7.247880e-003, 7.158283e-003, 1.258568e-002, 2.422326e-003, -5.229160e-003, -7.981319e-003, -2.168569e-004, 1.304926e-002, 1.525575e-002, 1.082655e-003, -1.478780e-002, -2.052476e-002, -1.610580e-002, -9.640696e-003, -3.571456e-003, -4.441142e-003, -4.401219e-003, -9.512301e-003, -1.622692e-002, -1.708339e-002, -7.973324e-003, 2.429177e-003, 1.918735e-003, -1.148677e-002, -2.120575e-003, 8.661093e-003, 1.914585e-002, 2.643091e-002, 6.282986e-003, 1.037980e-002, 1.470765e-002, -1.098786e-002, -1.629425e-002, -4.371594e-003, 2.562645e-003, 4.639600e-003, -4.720089e-003, 1.348266e-002, 3.388947e-002, -1.023968e-002, -6.031860e-003, -1.229887e-002, -1.787865e-002, -1.383040e-002, -1.199288e-002, -2.242286e-003, 9.582986e-003, 9.137235e-003, 1.124292e-002, 3.194902e-003, -1.315490e-002, -2.410178e-002, -2.135751e-002, 3.847450e-004, 8.286599e-003, -3.322518e-003, -1.051267e-002, -2.613876e-002, -3.072813e-002, -2.784551e-002, -1.848651e-002, -9.466414e-003, -8.838371e-003, -1.314637e-002, -1.779045e-002, -1.317721e-002, -3.867823e-003, -2.813936e-003, -8.067757e-003, -8.862730e-003, 8.816284e-003, 1.205443e-002, 5.145604e-004, 1.346427e-002, 1.201970e-004, 7.066125e-003, 1.529255e-002, -1.522557e-002, -2.693451e-002, -1.478507e-002, 2.042723e-003, 7.071096e-003, 1.720301e-003, 1.428644e-002, 4.747860e-002, 4.549152e-003, 1.014231e-002, 8.975311e-004, -8.457883e-004, -2.954658e-003, -4.287554e-003, 2.872495e-003, 8.761983e-003, 3.975061e-003, 1.502087e-002, 1.743266e-002, -3.603871e-003, -2.297676e-002, -2.371965e-002, -9.407749e-003, 6.177341e-004, -8.371814e-003, -1.181387e-002, -1.554842e-002, -2.155079e-002, -1.666328e-002, -7.662400e-003, 1.332293e-003, 6.468386e-003, 3.728797e-003, 1.221031e-003, 3.343646e-003, 8.199042e-003, 1.010439e-002, 6.598420e-003, 4.824968e-003, 9.182162e-003, 8.014346e-005, -7.107831e-003, 5.951351e-003, -5.106153e-003, -3.785022e-003, 1.623017e-002, -1.265550e-003, -1.462286e-002, -8.608553e-003, 1.217493e-003, 1.332629e-002, 1.564837e-002, 2.441659e-002, 2.969151e-002, -6.266116e-003, 9.471362e-003, 1.192808e-002, 7.527613e-003, 2.424574e-003, -6.093302e-003, 1.526789e-004, 6.439370e-003, 3.495342e-003, 1.115822e-002, 1.517870e-002, -6.089241e-003, -1.196110e-002, -1.044975e-002, -8.815996e-003, -4.438021e-003, -3.640042e-003, -2.780525e-003, -1.117313e-002, -1.357519e-002, -7.727579e-003, 2.109645e-003, 1.131062e-002, 1.540499e-002, 1.349851e-002, 9.637501e-003, 6.845905e-003, -1.243851e-002, -5.056049e-003, 6.167299e-003, 3.375682e-003, -6.957961e-003, -1.746640e-002, -1.936871e-002, 2.127535e-003, -1.374714e-002, -9.925203e-003, -1.181072e-003, -4.940414e-003, 1.035076e-003, 1.324369e-002, 1.116010e-002, 4.506131e-003, 5.456266e-003, 1.868162e-002, 6.147844e-003, -2.145508e-002, -2.596569e-002, 8.551281e-003, 1.478375e-002, 4.211070e-003, -8.081218e-003, 7.022014e-003, 1.641562e-002, 5.340385e-003, -7.238497e-003, 9.460749e-003, -3.557711e-003, 2.293607e-003, 5.791657e-003, -7.414860e-003, -2.072456e-002, -1.941196e-002, -1.478664e-002, -1.230508e-002, -9.276795e-003, -4.088336e-003, 3.599768e-003, 5.252374e-003, 3.307596e-003, -6.171790e-003, -1.191816e-002, -1.290629e-002, -9.530972e-003, -5.325876e-003, 3.548905e-003, 6.219231e-003, -5.249930e-003, -1.429158e-002, -1.715342e-002, 9.406654e-004, -7.277507e-003, 4.501694e-003, 8.504954e-003, -4.145235e-003, 4.533612e-003, 2.380465e-002, 2.328384e-002, -7.860514e-003, 7.335459e-003, 2.200830e-002, 5.246652e-003, -1.929389e-002, -1.341840e-002, 2.811664e-002, 2.602517e-002, -1.188270e-003, -1.311381e-002, 2.215767e-004, 1.887273e-002, -1.006730e-002, -2.733794e-002, 4.450927e-003, -3.423817e-003, 3.775897e-003, 1.058052e-002, 6.372104e-003, -9.376196e-003, -1.944180e-002, -1.407593e-002, -6.776928e-003, -2.527657e-003, -6.709059e-004, 2.684265e-003, 2.593513e-004, -3.765727e-003, -7.629290e-003, -1.109991e-002, -1.210354e-002, -9.046458e-003, -8.170786e-003, -6.345473e-003, -3.773018e-003, -5.340243e-003, -6.671778e-004, -1.568279e-002, -1.686939e-002, -7.763751e-003, 1.498460e-002, 2.411909e-002, 7.035300e-003, -9.352783e-004, 1.824474e-002, 2.956218e-002, -5.454553e-003, 2.140822e-004, 1.159160e-002, 2.570314e-002, 2.162487e-004, 2.871523e-003, 2.145321e-002, 1.882735e-002, -8.437057e-003, -1.106504e-002, 2.336670e-004, 1.612995e-002, -4.267655e-003, -



--`,,```,,,,````-`-`,,`,,`,`,,`---

© ISO/IEC 2004 — All rights reserved

Copyright International Organization for Standardization
Provided by IHS under license with ISO
No reproduction or networking permitted without license from IHS

Not for Resale

2.269063e-002, 3.961169e-003, 8.467936e-003, 9.754453e-003, 1.467714e-002, 1.504009e-002, -1.358028e-004, -1.254694e-002, -1.474060e-002, -6.406966e-003, -2.686231e-003, 9.193965e-004, 6.324136e-003, 5.351047e-003, 4.811272e-003, 9.630502e-004, -1.196239e-002, -1.857085e-002, -1.635525e-002, -8.281971e-003, -1.543325e-003, 2.815105e-003, 3.540901e-003, 1.333939e-002, -3.363496e-003, -6.872357e-003, 5.997211e-003, 1.610369e-002, 1.916876e-002, 2.100842e-002, 5.497906e-003, 1.148975e-002, 1.822932e-002, -6.107279e-003, -5.250400e-003, -5.271773e-004, 4.082082e-002, 1.400573e-002, 5.497698e-004, -1.353065e-003, 4.607762e-003, -3.593196e-003, 2.411438e-003, 2.264673e-003, 8.323481e-003, 2.706455e-003, -1.200742e-002, 5.938183e-003, 2.178596e-003, 1.445104e-003, 2.245821e-003, -1.316671e-003, -5.947663e-003, -1.281855e-002, -1.338097e-002, -4.567051e-003, 1.982351e-003, 3.189926e-003, 5.658617e-003, 8.393458e-003, 7.668917e-003, -1.008112e-003, -1.421862e-002, -2.031258e-002, -1.264260e-002, -1.251486e-003, 7.120544e-003, 1.342681e-002, 1.499996e-002, 1.880906e-002, 2.604049e-003, 5.319789e-003, 1.288159e-002, 9.122371e-003, 4.686459e-003, 9.198177e-003, -1.131882e-003, -4.430510e-003, -3.786408e-004, -1.719596e-002, -1.461578e-002, -1.452233e-002, 4.127813e-003, -2.435903e-002, -3.349880e-002, -2.033569e-002, -4.948940e-003, -2.935418e-003, -6.954340e-003, -2.544091e-002, -2.179597e-002, -7.107347e-003, -4.359593e-003, 3.493914e-003, -8.230098e-004, 2.100794e-003, 6.591117e-003, 1.100641e-003, -2.026569e-003, -1.706833e-003, 1.094341e-004, 1.231298e-002, 2.681947e-002, 3.034775e-002, 3.382840e-002, 3.669313e-002, 3.052010e-002, 2.323836e-002, 1.072976e-002, 5.965175e-003, 4.895617e-003, 5.593720e-003, 1.052436e-002, 8.719557e-003, 1.613505e-002, 1.690429e-002, 1.102193e-002, 6.905928e-003, 1.646981e-002, 8.773136e-003, -4.032388e-003, -4.488536e-003, -6.169849e-003, -1.655156e-002, -2.265630e-002, -1.336533e-002, -6.442178e-003, 3.423085e-003},
{-5.018637e-003, -4.769395e-003, -5.302595e-003, -1.000717e-002, -1.452704e-002, -3.094297e-003, 1.419043e-002, 1.511757e-002, -4.330928e-003, -5.385211e-003, 9.675511e-003, 1.402909e-002, 8.953045e-003, -1.328874e-002, -3.049549e-002, -3.839647e-002, -3.422757e-002, -2.003168e-002, -1.293423e-003, 1.876549e-002, 3.221780e-002, 3.158162e-002, 3.060949e-002, 2.522195e-002, 2.645657e-002, 2.318115e-002, 1.924343e-002, 1.582647e-002, 7.465184e-003, 9.896971e-003, 1.628396e-002, 2.137033e-002, 2.328564e-002, 2.354145e-002, 1.614429e-002, 7.427292e-003, 5.373322e-004, -1.986356e-003, -7.042840e-005, -5.490197e-003, -1.029734e-002, -9.132488e-003, -5.593122e-003, 2.613145e-003, 7.680197e-003, 1.343510e-002, -3.329204e-003, -2.101982e-003, -2.053522e-003, -1.061372e-002, -1.281739e-002, 2.763494e-003, 3.949444e-003, -2.287084e-002, -2.659519e-002, -1.683394e-002, -9.403402e-003, -2.920817e-003, -1.172074e-002, -2.314597e-002, -3.213661e-002, -3.167315e-002, -2.286705e-002, -1.193091e-002, 4.053813e-003, 1.660103e-002, 1.976699e-002, 1.608152e-002, 1.015127e-002, 6.965763e-003, 3.663894e-003, -3.588357e-003, -9.672766e-003, -1.523292e-002, -2.514311e-002, -2.303320e-002, -1.490877e-002, -8.217971e-003, -5.646471e-003, -4.011866e-003, -9.726152e-003, -1.109487e-002, -1.650598e-002, -1.757088e-002, -8.999856e-003, 4.431856e-003, -7.120354e-004, -4.459680e-003, -4.529209e-003, -1.047073e-003, 5.507472e-003, 1.163663e-002, -4.765695e-004, 1.206521e-002, 7.251676e-003, 1.392148e-003, 2.622003e-003, -4.859118e-004, -1.355423e-002, -1.961835e-002, -4.261594e-003, -4.626043e-003, -6.739847e-004, 1.143304e-003, 1.683217e-003, -7.349292e-003, -1.801174e-002, -1.496670e-002, -8.571522e-003, -1.064870e-004, 1.147131e-002, 1.927289e-002, 1.839682e-002, 1.568967e-002, 1.284496e-002, 1.427075e-002, 9.936524e-003, 5.529754e-003, -2.209024e-003, -1.211596e-002, -1.669725e-002, -1.315393e-002, -1.065527e-002, -6.352234e-003, -5.587506e-003, 8.683550e-004, 4.741429e-003, -3.105293e-003, -6.154652e-003, -4.236118e-003, 1.717148e-003, 1.995920e-002, 2.365682e-002, 2.423934e-003, -2.030981e-003, 1.446052e-003, 1.230527e-002, 1.348550e-002, 7.218077e-003, 2.083149e-002, 1.531195e-002, 1.037898e-002, -1.377716e-003, -1.176877e-002, -9.077087e-003, 9.632920e-003, 5.838067e-003, 6.526478e-003, 9.961163e-003, 9.685294e-003, 1.253067e-003, -1.323710e-002, -2.202111e-002, -1.711994e-002, -1.033194e-002, -1.047474e-003, 9.606861e-003, 2.053026e-002, 1.852188e-002, 1.335859e-002, 1.141673e-002, 1.211755e-002, 1.036738e-002, 1.698460e-002, 2.165816e-002, 9.889007e-003, -2.562346e-003, -4.553485e-003, -5.568451e-003, -4.457386e-003, -2.663425e-003, 8.398028e-004, 6.696220e-003, 5.800825e-004, -1.255616e-002, -1.092835e-002, -1.178826e-003, 1.657796e-002, 2.709096e-002, 1.767316e-002, -6.231670e-003, -1.778873e-003, 8.304903e-003, 1.587829e-002, 9.125888e-003, 2.528324e-002, 2.331332e-002, 1.244232e-002, -2.926411e-003, -7.912108e-003, 2.460327e-002, 2.384845e-002, 2.080653e-002, 2.478263e-002, 2.925565e-002, 9.160833e-003, -1.062307e-002, -2.469539e-002, -2.721107e-002, -2.033764e-002, -1.159806e-002, 2.312989e-003, 1.620148e-002, 1.914431e-002, 1.287175e-002, 1.685908e-003, -3.755914e-003, -6.614315e-003, -5.689755e-004, 1.650893e-002, 3.722105e-002, 4.079087e-002, 2.952547e-002, 1.777250e-002, 1.191586e-002, 3.577705e-003, 2.998846e-003, 2.006777e-003, 2.289279e-003, 2.727207e-003, -1.193299e-002, -1.523236e-002, -3.028955e-003, 4.158846e-003, 6.490987e-003, 1.486080e-002, -1.022513e-003, -6.323873e-003, -6.331939e-004, 1.108903e-002, 1.430739e-002, 3.065513e-002, 2.266914e-002, 1.507875e-002, -2.202988e-003, 2.807441e-003, 1.610007e-002, 1.066584e-002, 1.591504e-002, 2.435341e-002, 9.608152e-003, -1.021972e-002, -2.449097e-002, -2.718583e-002, -2.291120e-002, -1.638622e-002, -4.045749e-003, 1.217874e-002, 1.867783e-002, 1.651039e-002, 1.935713e-003, -2.001129e-002, -3.394998e-002, -4.094530e-002, -2.758072e-002, -2.626401e-003,

© ISO/IEC 2004 — All rights reserved


--`,,```,,,,````-`-`,,`,,`,`,,`---
Copyright International Organization for Standardization
Provided by IHS under license with ISO
No reproduction or networking permitted without license from IHS
Not for Resale

2.480280e-002, 4.593611e-002, 4.962672e-002, 3.541531e-002, 2.092337e-002, 1.152797e-002, 9.957413e-003, 1.320083e-002, 1.101782e-002, 9.522108e-003, 5.108963e-004, -6.239416e-003, 4.812197e-003, 1.192951e-002, 6.463673e-003, 1.399101e-002, 2.651981e-002, 2.819817e-004, -3.243180e-003, 8.314658e-003, 1.678414e-002, 2.616451e-002, 1.952134e-002, 1.421252e-002, -7.561785e-004, -3.613700e-003, 2.326677e-003, -1.201024e-003, 6.407963e-003, 9.023585e-003, -2.968332e-003, -7.885526e-003, -1.160396e-002, -1.295494e-002, -1.473023e-002, -1.240308e-002, -4.837972e-004, 1.613789e-002, 2.282134e-002, 1.740366e-002, 2.173705e-005, -2.767168e-002, -5.177103e-002, -5.871741e-002, -4.614780e-002, -2.317888e-002, 5.885687e-003, 3.126980e-002, 4.000783e-002, 3.561119e-002, 1.679939e-002, 3.356339e-003, -4.228056e-003, -6.759884e-003, 9.799342e-004, 1.106604e-002, -2.278765e-003, -8.569989e-003, 3.475798e-004, 1.336603e-002, -3.672682e-004, -2.633718e-003, 1.462077e-002, 3.442482e-003, -8.908778e-003, 1.540341e-003, 1.423779e-002, 1.184062e-002, 7.733284e-003, 7.765053e-003, -3.282449e-003, -1.387160e-002, -6.005642e-003, -4.951637e-003, 4.601382e-003, 6.460264e-003, 7.995569e-003, 1.332391e-002, 3.936062e-003, -1.674912e-002, -2.803105e-002, -2.116540e-002, -3.518490e-003, 1.442242e-002, 2.195856e-002, 1.542166e-002, -5.601631e-003, -3.228453e-002, -5.149112e-002, -5.259070e-002, -3.888667e-002, -2.237334e-002, -3.027247e-003, 1.269919e-002, 1.869000e-002, 1.546039e-002, 4.729627e-003, -8.127811e-003, -1.288994e-002, -2.787655e-002, -2.738176e-002, -1.968092e-003, 6.673187e-003, -6.438423e-004, -1.220762e-002, 5.053396e-003, 2.309453e-003, -1.808922e-002, -8.614138e-004, 1.326297e-002, -1.078672e-002, -7.729813e-003, 3.924264e-003, -2.289177e-003, -1.072557e-003, 8.444939e-003, -1.094491e-002, -1.841759e-002, -7.346722e-003, 5.026866e-003, 4.081296e-003, 7.650827e-003, 1.861318e-002, 2.215421e-002, -2.201526e-003, -3.010227e-002, -3.383090e-002, -2.314175e-002, -5.127916e-003, 1.098783e-002, 1.595332e-002, 1.356396e-002, -5.276486e-003, -2.520723e-002, -4.192064e-002, -3.953812e-002, -2.473756e-002, -1.216844e-002, -1.071863e-003, 1.019439e-002, 1.254957e-002, 8.040612e-003, 2.438576e-003, -6.781317e-003, -1.615802e-002, -3.023519e-002, -3.825356e-002, -2.299280e-002, 5.016052e-003, 4.686884e-003, -7.464264e-003, -2.750133e-003, 1.211090e-003, -1.570283e-002, -1.096111e-002, 2.371571e-002, -1.097985e-002, -1.534767e-002, -7.353054e-003, -1.466475e-002, -3.270433e-003, 8.099198e-003, -1.314455e-002, -1.879247e-002, -4.694397e-004, 1.083461e-002, 3.465897e-003, 1.028875e-002, 2.255867e-002, 1.725171e-002, -1.514709e-002, -3.659341e-002, -2.949870e-002, -1.300869e-002, 6.849043e-003, 1.457018e-002, 1.368617e-002, 1.173257e-002, 8.464944e-005, -1.439784e-002, -2.428824e-002, -1.794935e-002, -3.716298e-003, 5.909328e-003, 1.081805e-002, 1.413647e-002, 1.647160e-002, 1.322100e-002, 5.951427e-003, -5.283523e-003, -1.139801e-002, -1.729831e-002, -3.206332e-002, -2.876295e-002, -2.211716e-003, 4.933347e-003, -5.761632e-003, -8.381991e-003, -1.572950e-003, -8.926610e-003, -1.781320e-002, 2.129722e-002, -6.612812e-003, -2.535309e-002, -9.487432e-003, -1.629214e-002, 2.357374e-003, 1.418041e-003, -1.082603e-002, -1.135538e-002, 8.655140e-003, 7.591259e-003, -2.371878e-003, 6.825126e-003, 2.312265e-002, 6.225537e-003, -1.655168e-002, -2.329087e-002, -6.479223e-003, 1.348806e-002, 1.898046e-002, 1.426407e-002, 8.897243e-003, 1.036200e-002, 5.467989e-003, -6.222185e-003, -8.148030e-003, 9.700761e-004, 1.395679e-002, 1.700853e-002, 1.445553e-002, 1.031526e-002, 9.345307e-003, 1.300910e-002, 1.346660e-002, 3.015019e-003, -6.484302e-003, -3.825865e-003, -1.177854e-002, -1.832845e-002, -8.322410e-003, 3.955512e-003, -3.350942e-003, -7.609705e-003, -5.506796e-003, -6.257485e-003, -1.738445e-002, 1.175654e-002, -1.408065e-003, -2.496781e-002, -1.010714e-002, -1.381976e-002, 3.470116e-004, -9.326969e-003, -7.789961e-003, 1.121733e-003, 1.623562e-002, 3.219981e-003, -1.473190e-002, 3.323417e-003, 1.620720e-002, 1.418346e-003, -6.813333e-003, 2.288294e-003, 1.722091e-002, 2.637309e-002, 1.969737e-002, 7.736674e-003, 6.385025e-004, 6.724075e-003, 3.203280e-003, -2.389508e-003, 1.249411e-003, 1.329211e-002, 2.522790e-002, 2.383362e-002, 1.423029e-002, 3.528193e-003, 2.699453e-004, 3.839616e-003, 6.295332e-003, -3.065245e-004, -8.464114e-003, 2.153909e-003, 7.455798e-003, 1.047959e-003, -1.309435e-003, 8.821923e-003, -2.242903e-004, -1.077296e-002, -1.366080e-002, -5.678900e-003, -1.266175e-002, -1.621998e-003, 1.079634e-004, -2.025539e-002, -1.458539e-002, -6.010109e-003, -2.830109e-003, -1.612919e-003, 5.976109e-003, 8.570221e-003, 1.824753e-002, -4.317786e-003, -2.835798e-002, -3.031627e-003, 1.143575e-002, 4.141751e-003, 2.595791e-003, 1.802845e-002, 2.991537e-002, 2.400956e-002, 1.138609e-002, -7.919474e-003, -1.590425e-002, -7.642200e-003, -7.844825e-003, -5.410594e-003, 7.008013e-003, 2.227476e-002, 2.999925e-002, 2.353000e-002, 1.160755e-002, -1.213746e-003, -8.849136e-003, -1.042028e-002, -9.615081e-003, -1.146379e-002, -1.460689e-002, -6.480523e-003, 1.347398e-002, 1.679162e-002, 9.092244e-003, 1.007045e-002, 2.074285e-003, -9.760438e-003, -1.610876e-002, -6.752168e-004, -7.115315e-003, -9.546179e-003, 7.363517e-004, -7.962398e-003, -2.039988e-002, -4.206797e-003, -7.160406e-003, 9.430948e-003, 1.701662e-002, 1.724519e-002, 2.387801e-002, -5.131818e-003, -3.433132e-002, -5.589593e-003, 1.223475e-002, 4.964815e-003, 1.012664e-002, 2.103484e-002, 2.874626e-002, 1.901436e-002, 2.361987e-003, -2.095910e-002, -2.956185e-002, -2.531201e-002, -1.690459e-002, -8.214152e-003, 8.790996e-003, 2.502024e-002, 2.706923e-002, 1.884114e-002, 8.035553e-003, -9.844016e-004, -5.167790e-003, -6.703117e-003, -1.309452e-002, -1.713433e-002, -2.597636e-002, -2.321544e-002, -3.653870e-003, 2.095982e-002, 1.627006e-002, 6.669311e-003, 6.647748e-003, -6.026760e-003, -1.249806e-002, 1.239312e-002, -


© ISO/IEC 2004 — All rights reserved

--`,,```,,,,````-`-`,,`,,`,`,,`---

Copyright International Organization for Standardization
Provided by IHS under license with ISO
No reproduction or networking permitted without license from IHS
Not for Resale

3.476634e-004, -1.108512e-002, 8.704973e-004, -2.612241e-003, -2.177082e-002, -5.537482e-003, -1.031101e-002, 8.761270e-003, 1.961896e-002, 1.532917e-002, 2.766435e-002, -4.554077e-003, -2.584252e-002, -2.344520e-003, 1.641009e-002, 8.192612e-003, 8.105798e-003, 1.731273e-002, 2.032345e-002, 1.251059e-002, -8.948605e-003, -2.696502e-002, -3.277608e-002, -3.110620e-002, -1.586505e-002, -2.985619e-004, 1.343492e-002, 2.442539e-002, 2.261178e-002, 1.325036e-002, 8.770651e-003, 3.086221e-003, 2.342040e-003, 7.626641e-003, -8.333903e-004, -1.446674e-002, -2.615933e-002, -3.591243e-002, -2.838859e-002, 1.140997e-002, 2.153784e-002, 7.379190e-003, 7.665205e-003, 3.611391e-004, -6.761048e-003, 1.595262e-002, 1.265175e-002, -1.836140e-002, -4.345914e-003, 3.856031e-003, -1.663412e-002, -9.299834e-004, -1.096257e-002, 4.531983e-003, 1.777404e-002, 1.242246e-002, 2.562791e-002, 1.272752e-004, -1.328007e-002, 9.987656e-003, 2.042741e-002, 9.034769e-003, 8.501335e-003, 1.166501e-002, 8.848847e-003, -1.530865e-003, -1.822582e-002, -2.930312e-002, -3.359579e-002, -2.860761e-002, -9.890807e-003, 9.649333e-003, 1.834997e-002, 2.351689e-002, 2.237519e-002, 1.045727e-002, 5.813556e-003, 9.562226e-003, 1.153403e-002, 1.945130e-002, 1.681366e-002, 4.239362e-003, -1.027689e-002, -2.871172e-002, -3.883551e-002, -2.770204e-003, 2.298937e-002, 7.142923e-003, 3.439369e-003, 3.112122e-003, -3.070014e-003, 1.604128e-002, 2.382903e-002, -1.640455e-002, -3.472576e-003, 1.041892e-002, -1.542019e-002, 6.206191e-003, -9.139071e-003, 2.772138e-003, 1.080521e-002, 7.938164e-003, 1.761088e-002, 2.406881e-003, 2.413341e-003, 2.180246e-002, 1.754879e-002, 8.003248e-003, 1.452858e-002, 2.136526e-002, 1.658639e-002, 4.949024e-003, -3.652590e-003, -1.534283e-002, -3.077243e-002, -3.317205e-002, -2.038115e-002, 2.194687e-003, 1.426928e-002, 1.713859e-002, 1.517666e-002, 9.737862e-003, 3.563936e-003, 1.208233e-002, 2.536785e-002, 3.330331e-002, 3.182201e-002, 2.693115e-002, 1.301858e-002, -9.289212e-003, -3.475044e-002, -1.728686e-002, 1.633295e-002, 7.273214e-003, -4.038675e-003, -3.838881e-003, -2.167704e-003, 1.313941e-002, 3.135755e-002, -1.012712e-002, -7.765149e-003, 1.018987e-002, -1.200302e-002, 1.590181e-002, -5.722717e-003, -3.565996e-003, 3.202831e-004, -7.002329e-004, 7.842683e-003, 2.334867e-003, 8.867061e-003, 2.396647e-002, 1.000160e-002, 5.839326e-003, 1.413531e-002, 3.877049e-002, 5.431986e-002, 5.261795e-002, 3.926398e-002, 7.809625e-003, -2.990509e-002, -5.145990e-002, -5.288832e-002, -2.797315e-002, -2.282390e-003, 4.811199e-003, 1.765633e-003, -9.104027e-004, -4.047763e-003, 2.738653e-003, 2.224810e-002, 4.114464e-002, 5.232044e-002, 4.721102e-002, 2.717292e-002, 2.463543e-003, -2.682297e-002, -2.014523e-002, 1.163988e-002, 9.383782e-003, -9.882529e-003, -1.200541e-002, -3.001923e-003, -3.397027e-003, 2.930549e-002, -3.129018e-003, -1.331699e-002, 1.181107e-002, -5.667033e-003, 2.358254e-002, -1.574012e-003, -5.812605e-003, -8.305564e-003, -9.688012e-003, -3.001108e-003, -2.110965e-003, 6.602562e-003, 1.263569e-002, -1.365552e-002, -2.244710e-002, 3.707159e-003, 4.955448e-002, 7.651397e-002, 7.768049e-002, 5.225058e-002, 1.117165e-002, -3.809936e-002, -7.159489e-002, -7.992080e-002, -4.833008e-002, -1.114437e-002, 5.172908e-003, -5.252213e-003, -2.558052e-002, -4.414677e-002, -5.161310e-002, -3.164014e-002, 1.135350e-002, 5.137364e-002, 5.912161e-002, 4.278937e-002, 3.489842e-003, -3.595709e-002, -3.317865e-002, 1.450032e-004, 6.931419e-003, -1.728016e-002, -1.157960e-002, -8.529592e-003, -2.066192e-002, 1.710046e-002, 1.691007e-003, -1.713530e-002, 1.356268e-002, -2.116112e-003, 2.443376e-002, 7.449347e-004, -9.146400e-004, -9.760945e-003, -1.215529e-002, -1.296684e-002, -7.831403e-003, -5.671039e-004, -2.190563e-003, -4.232705e-002, -5.565404e-002, -3.568574e-002, -1.320912e-002, 8.127960e-003, 2.736394e-002, 3.287243e-002, 1.140228e-002, -3.069545e-002, -7.640936e-002, -8.875230e-002, -4.930875e-002, -3.990902e-003, 2.298342e-002, 6.456464e-003, -4.480828e-002, -8.088272e-002, -7.932212e-002, -3.629957e-002, 2.307255e-002, 6.686266e-002, 6.259653e-002, 2.483980e-002, -2.664590e-002, -6.067736e-002, -5.939520e-002, -2.415189e-002, -1.461455e-003, -2.245045e-002, -1.234800e-002, -7.718553e-003, -3.303184e-002, 1.962384e-003, 3.700686e-003, -8.077289e-003, 1.264789e-002, -2.433483e-004, 2.423605e-002, 1.355684e-002, 1.197279e-002, -3.473006e-003, -9.092334e-003, -7.797880e-003, -9.046642e-003, -8.162646e-003, -6.865774e-003, -5.367499e-002, -8.925785e-002, -8.882327e-002, -7.126558e-002, -3.666450e-002, 1.189961e-002, 4.025936e-002, 3.536221e-002, 4.623107e-003, -4.024775e-002, -5.820403e-002, -1.013903e-002, 4.811713e-002, 8.043274e-002, 6.854410e-002, 4.649797e-003, -4.052236e-002, -7.358139e-003, 5.294083e-002, 8.579385e-002, 7.795005e-002, 3.831909e-002, -2.089781e-002, -7.353454e-002, -1.090832e-001, -9.361200e-002, -2.940034e-002, -2.755202e-003, -1.523225e-002, -1.364092e-003, 9.346897e-003, -2.942240e-002, -6.063788e-003, 3.210763e-003, -2.809566e-003, 1.197008e-002, 3.377192e-003, 1.300431e-002, 1.346745e-002, 1.963378e-002, -4.428357e-003, -9.811328e-003, -2.579087e-003, -6.304567e-003, 8.527947e-003, 8.700897e-003, -4.908442e-002, -8.396091e-002, -7.173967e-002, -4.498607e-002, -2.455284e-002, -2.885948e-003, 1.823794e-002, 3.340266e-002, 2.182522e-002, -1.425899e-002, -2.504777e-002, 2.638228e-002, 8.907865e-002, 1.269840e-001, 1.171359e-001, 5.085301e-002, -8.905305e-003, 1.471124e-002, 5.000410e-002, 6.749015e-002, 5.677686e-002, 1.745127e-002, -1.735928e-002, -4.084289e-002, -7.469654e-002, -7.650575e-002, -1.851385e-002, 9.764906e-003, -2.818559e-003, 1.163167e-002, 2.453664e-002, -1.950021e-002, -4.498140e-003, 1.122381e-002, -1.209291e-003, 1.391388e-002, 1.034272e-003, -1.663029e-003, -1.827986e-003, -1.270334e-003, -2.727636e-002, -4.364854e-003, 2.030499e-003, -6.825168e-003, 1.805669e-002, 3.110256e-002, -1.228395e-003, -3.117667e-002, -

© ISO/IEC 2004 — All rights reserved


Copyright International Organization for Standardization
Provided by IHS under license with ISO
No reproduction or networking permitted without license from IHS
Not for Resale

1.417072e-002, -1.211925e-003, -7.163111e-003, -6.823169e-003, -1.453803e-002, -9.832214e-003, 3.628002e-003, -2.004442e-005, -1.727551e-003, 1.455012e-002, 5.040704e-002, 7.767054e-002, 8.620778e-002, 3.883142e-002, -2.320653e-002, -1.702513e-002, 6.693965e-003, 2.150527e-002, 2.870284e-002, 7.229345e-003, 1.633052e-004, 4.237555e-003, -2.887799e-005, -1.257294e-002, 1.614234e-002, 3.360164e-002, 8.949761e-003, 2.303012e-002, 3.361095e-002, -4.052003e-003, 3.107866e-003, 1.973775e-002, -8.008756e-004, 6.910177e-003, 5.295581e-005, -1.218505e-002, -1.798117e-002, -1.583553e-003, -1.684279e-002, -1.640030e-003, -2.744144e-003, -3.105092e-002, -9.862983e-004, 3.634927e-002, 3.113148e-002, 1.999106e-002, 1.599839e-002, -1.480548e-003, -1.764857e-003, 2.271785e-002, 1.441687e-003, -4.215198e-002, -1.282051e-002, 1.312838e-002, 1.082910e-002, -3.624119e-003, -8.036921e-003, -2.037465e-003, 2.142339e-002, -1.813626e-003, -3.217769e-002, -2.794013e-002, -2.410833e-002, -1.794134e-002, -2.614235e-003, -2.615275e-002, -5.497298e-002, -5.785993e-003, 3.987712e-002, 3.625097e-002, 2.749861e-002, 3.640800e-002, 1.465113e-002, 1.116206e-002, 1.912504e-002, 5.111392e-004, 1.610489e-002, 2.353470e-002, 1.158112e-002, 1.660034e-002, 1.033891e-002, -1.684081e-002, -2.214787e-002, 4.122718e-003, -7.766247e-003, -2.249637e-003, 2.056767e-003, -2.941368e-002, -1.351863e-002, -4.170052e-004, 8.845005e-003, 3.356474e-002, 3.173765e-002, -6.341231e-004, -1.575089e-002, 1.364159e-002, -3.783763e-003, -4.511728e-002, -4.034742e-003, 3.615622e-002, 2.305007e-002, -1.922099e-002, -3.814069e-002, -4.695505e-002, -1.874331e-002, -6.314853e-003, -2.069134e-002, -9.065071e-003, -6.131306e-003, -2.351509e-002, 9.221320e-003, -4.188989e-003, -5.392186e-002, -3.595493e-002, 1.651704e-002, 2.062446e-002, 5.124057e-003, -3.641808e-003, -6.278035e-003, -1.747244e-002, -1.364718e-002, -5.028683e-003, 1.869330e-002, 2.904327e-002, 2.078169e-002, 1.902754e-002, 1.153911e-002, -2.007184e-002, -1.276245e-003, 1.477464e-002, -4.734052e-003, -2.214306e-003, 1.121374e-003, -9.154875e-003, -9.635352e-003, -3.056152e-002, -2.673883e-002, -1.041461e-002, 1.582673e-002, 3.221560e-002, 2.001475e-002, 2.686710e-002, 2.585249e-002, 2.483894e-002, 4.595534e-002, 5.518443e-002, 2.139219e-002, -1.050373e-002, -3.251131e-002, -5.242967e-002, -2.990350e-002, 5.707719e-003, -5.044819e-003, -5.770732e-003, 1.678898e-002, 2.458988e-002, 2.137670e-002, 1.653427e-002, 1.642821e-002, 1.970231e-002, -5.433525e-003, -2.765079e-002, -3.577828e-002, -2.689078e-002, -1.543181e-002, -1.669301e-002, -1.832834e-002, -8.731465e-003, 8.378888e-003, 1.734890e-002, 1.716159e-002, 2.003312e-002, 1.157678e-002, -2.122583e-002, 5.779314e-003, 2.202301e-002, -8.419736e-003, -7.174994e-003, -3.409835e-003, 2.635683e-003, 3.369706e-003, -4.653432e-002, -4.865251e-002, -3.486982e-002, -3.045949e-003, 2.256879e-002, 2.748220e-002, 2.588410e-002, 2.823257e-002, 3.237520e-002, 5.015611e-002, 5.906437e-002, 3.338073e-002, 4.042461e-003, -1.851921e-002, -4.484765e-002, -2.958041e-002, 1.031184e-002, 1.917295e-002, -7.175239e-003, 5.549702e-003, 2.221985e-002, 3.199587e-002, 3.756379e-002, 4.063478e-002, 3.267877e-002, 1.184165e-002, -2.101808e-002, -4.021395e-002, -2.292834e-002, 1.401769e-003, 2.939628e-003, -4.878103e-003, 3.968338e-003, -6.500288e-003, -5.417153e-003, 1.284668e-003, 1.736312e-002, 4.520883e-003, -2.383037e-002, 9.424626e-004, 1.443138e-002, -2.189037e-002, -9.556646e-003, -5.431045e-003, 4.016638e-003, 7.628907e-003, -4.520264e-002, -5.745242e-002, -4.651178e-002, -2.935054e-002, -1.851539e-002, -1.886186e-002, -1.959362e-002, -1.010491e-002, 4.510034e-003, 2.629857e-002, 3.693341e-002, 2.278201e-002, 8.068212e-003, -5.826908e-003, -3.412353e-002, -2.609735e-002, 1.525751e-002, 3.791895e-002, 3.357300e-003, -1.656375e-002, -5.773189e-003, 6.508973e-006, 4.170829e-003, 7.483703e-003, 6.329086e-003, -3.015391e-003, -2.303945e-002, -2.821167e-002, -1.012186e-002, 1.228748e-002, 1.200917e-002, -7.563390e-004, 1.580499e-002, -1.094099e-002, -2.248363e-002, -1.084898e-002, 7.580289e-003, -2.823557e-003, -1.957350e-002, -2.983035e-003, -1.768547e-003, -3.529815e-002, -1.858375e-002, -1.748119e-003, 5.528528e-003, 3.785278e-003, -2.485263e-002, -4.581501e-002, -4.499564e-002, -3.631433e-002, -3.928204e-002, -4.414713e-002, -4.113662e-002, -3.221622e-002, -2.045571e-002, 3.964073e-003, 2.017275e-002, 2.360654e-002, 1.357839e-002, 3.702005e-003, -2.188029e-002, -1.630079e-002, 1.014566e-002, 3.364880e-002, 2.389271e-002, -1.455632e-002, -2.570710e-002, -2.466403e-002, -2.281372e-002, -1.883922e-002, -1.298912e-002, -1.130804e-002, -1.909349e-002, -1.286633e-002, 1.169132e-003, 1.622645e-002, 1.545312e-002, 1.188744e-003, 2.120959e-002, -1.708405e-002, -3.549977e-002, -2.329368e-002, -4.916428e-003, 2.713627e-003, 3.007898e-003, -4.861587e-003, -8.599442e-003, -2.652474e-002, -1.912994e-002, -5.568733e-003, 1.369567e-003, 2.765964e-003, -1.478593e-002, -1.494379e-002, -1.103534e-002, -1.410621e-002, -3.137745e-002, -3.945804e-002, -3.745733e-002, -3.089038e-002, -2.080228e-002, 8.676657e-003, 2.709653e-002, 3.355254e-002, 2.388463e-002, 1.599269e-002, -1.417690e-002, -1.301687e-002, 1.269069e-002, 2.287452e-002, 2.969850e-002, 8.148631e-003, -1.070227e-002, -1.943582e-002, -1.833997e-002, -1.184020e-002, -1.497951e-003, 3.093595e-003, -1.245144e-003, 6.692091e-004, 7.606413e-003, 1.904546e-002, 1.426087e-002, -2.342549e-003, 4.050237e-003, -1.904066e-002, -2.985090e-002, -1.553549e-002, -3.706851e-003, 1.110002e-002, 9.121724e-003, -7.786104e-003, -3.946017e-004, -5.701967e-003, -8.676524e-003, -6.285858e-003, -1.447885e-003, 6.029928e-004, -9.320819e-003, 2.632715e-003, 2.097275e-002, 2.151477e-002, 8.178223e-003, -1.205451e-003, -5.203555e-003, -4.592524e-003, -1.400414e-004, 1.275867e-002, 2.328021e-002, 3.448453e-002, 4.106731e-002, 3.120502e-002, -3.287700e-003, -1.330666e-002, 1.582067e-002, 2.087594e-002, 1.815116e-002,


© ISO/IEC 2004 — All rights reserved

Copyright International Organization for Standardization
Provided by IHS under license with ISO
No reproduction or networking permitted without license from IHS
Not for Resale

2.032487e-002, 1.746295e-002, 8.273792e-003, 1.068187e-002, 1.547985e-002, 2.251869e-002, 2.078214e-002, 7.772869e-003, 8.597476e-003, 1.343608e-002, 1.982447e-002, 3.568216e-003, -1.095979e-002, -5.133179e-003, -1.579666e-002, -1.441494e-002, 5.065702e-003, 4.213956e-003, 8.498972e-003, 7.716521e-003, -1.759780e-002, 9.770829e-003, 1.216996e-002, 2.533595e-003, -1.945918e-003, -3.332662e-003, -1.660414e-003, -8.357319e-003, 3.732169e-003, 2.591597e-002, 3.977990e-002, 3.393782e-002, 2.513534e-002, 1.364730e-002, -3.763401e-003, -2.316575e-002, -1.615753e-002, 8.438931e-003, 2.641515e-002, 4.448808e-002, 3.643432e-002, 4.248945e-003, -3.966691e-003, 1.434774e-002, 1.906843e-002, -3.113047e-003, -7.427196e-003, 7.018361e-003, 1.790530e-002, 2.713433e-002, 3.481961e-002, 4.065331e-002, 2.655719e-002, 8.967859e-003, 1.132515e-002, 1.801641e-002, 1.842853e-002, -6.580805e-003, -9.253044e-003, -1.098456e-002, -6.944824e-003, 2.432454e-003, 2.376518e-002, 2.889011e-003, 8.522081e-003, 5.421307e-003, -2.179693e-002, -1.499139e-003, 9.970809e-003, 1.456876e-002, -7.446827e-004, -5.910029e-003, -6.803032e-003, -5.957380e-003, 2.168793e-003, 2.149366e-002, 3.599448e-002, 3.506661e-002, 2.300904e-002, -3.213489e-003, -3.431248e-002, -5.057972e-002, -3.125659e-002, -9.553749e-003, 7.026836e-003, 3.636250e-002, 2.413698e-002, 3.733084e-003, -4.575744e-003, 9.823872e-003, 1.900158e-002, -1.015563e-002, -3.960853e-002, -2.510319e-002, 2.396374e-003, 2.109774e-002, 3.499128e-002, 3.728570e-002, 1.806963e-002, 4.355429e-003, 1.258600e-002, 1.538649e-002, 9.535536e-003, -1.568907e-002, -4.351115e-003, -1.109982e-002, 2.468656e-004, 8.462164e-003, 2.677718e-002, -7.404846e-003, 8.198076e-003, 4.424585e-003, -1.829572e-002, -1.554632e-002, -1.256740e-003, 3.625392e-003, 3.958761e-003, -7.158249e-003, -1.107913e-002, -8.037498e-003, 1.148331e-003, 1.639057e-002, 2.763584e-002, 2.778069e-002, 1.100183e-002, -1.858184e-002, -4.979632e-002, -6.399652e-002, -5.731833e-002, -3.471907e-002, -1.364785e-002, 2.589320e-002, 2.903730e-002, -5.884305e-006, -3.390722e-002, -2.915735e-002, 1.280019e-002, -1.555519e-002, -5.473210e-002, -5.003053e-002, -2.066333e-002, 6.927794e-003, 2.374884e-002, 2.605875e-002, 1.188653e-002, 5.350520e-003, 1.258404e-002, 7.583256e-003, -3.965019e-003, -1.388414e-002, 1.961786e-003, 2.736480e-003, 1.304551e-003, 1.200171e-002, 1.438200e-002, -1.419970e-002, 7.557738e-003, 3.919318e-003, -1.215304e-002, -1.995959e-002, -8.573480e-003, -7.399664e-003, 4.335767e-003, -4.213215e-003, -1.127919e-002, -7.063520e-003, 1.167825e-003, 9.928882e-003, 2.014796e-002, 2.508875e-002, 7.981547e-003, -2.074729e-002, -4.314490e-002, -6.139367e-002, -6.607539e-002, -4.661470e-002, -1.186329e-002, 2.087669e-002, 3.096567e-002, 2.186240e-002, -1.733143e-002, -4.448027e-002, -1.997052e-002, -2.540978e-002, -6.045679e-002, -6.099991e-002, -3.789028e-002, -3.403363e-003, 1.737499e-002, 1.931368e-002, 9.550691e-003, 1.493222e-002, 1.732159e-002, -8.838568e-004, -1.467574e-002, -9.814071e-004, 1.710730e-002, 1.897784e-002, -1.813370e-003, 6.152399e-003, 5.711113e-003, -1.672462e-002, -3.672671e-003, -2.611514e-003, -3.783742e-003, 9.072646e-004, 1.998997e-003, 3.456586e-004, 1.079239e-002, -5.813017e-003, -1.138773e-002, -3.911934e-003, -2.064755e-003, 7.261153e-003, 1.553903e-002, 2.279766e-002, 9.014851e-003, -1.432722e-002, -3.104942e-002, -3.799660e-002, -3.543221e-002, -2.655317e-002, -1.962645e-003, 2.727205e-002, 2.426693e-002, 1.639026e-002, 6.126805e-003, -1.105022e-002, -1.496384e-002, -2.760467e-002, -4.471124e-002, -5.324263e-002, -4.591319e-002, -1.433818e-002, 1.074375e-002, 1.422668e-002, 8.274274e-003, 1.876943e-002, 1.616137e-002, -7.903585e-003, -9.358956e-003, 1.599922e-002, 4.244637e-002, 3.025751e-002, -4.102883e-003, -6.697185e-003, -2.822947e-003, -2.424036e-002, -1.282179e-002, -9.617149e-003, 1.717787e-003, 1.750897e-002, 1.603667e-002, 9.569392e-003, 6.929805e-003, -1.288024e-002, -1.311042e-002, 3.463939e-003, -1.089206e-003, 4.585561e-003, 1.231655e-002, 2.241740e-002, 1.816596e-002, 2.219704e-003, -1.168452e-002, -9.952789e-003, -2.285815e-003, 3.186354e-003, 3.783669e-003, 8.194340e-003, -1.221227e-004, -9.707862e-004, 5.942304e-003, -5.921107e-003, -4.754404e-003, -1.286342e-002, -1.866487e-002, -2.571542e-002, -2.706247e-002, -1.347231e-002, 3.207092e-003, 5.483007e-003, 6.104128e-003, 2.206584e-002, 1.140998e-002, -1.295420e-002, -7.173395e-003, 1.531835e-002, 3.263269e-002, 3.623277e-004, -3.438452e-002, -2.081776e-002, -3.631961e-003, -3.414713e-002, -1.684998e-002, -9.076350e-003, 1.488089e-003, 1.966496e-002, 2.538923e-002, 2.122613e-002, 8.079665e-003, -2.263397e-002, -9.623835e-003, 1.255918e-002, 6.429881e-003, 4.514304e-003, 8.098255e-003, 2.034762e-002, 2.509819e-002, 2.108996e-002, 1.949526e-002, 2.556299e-002, 2.977263e-002, 2.917862e-002, 1.920397e-002, 7.754759e-003, -7.969970e-003, -9.528572e-003, 1.145345e-003, 3.511027e-003, 5.669427e-003, 1.929187e-003, 4.851905e-003, 8.293451e-003, 3.298604e-003, -2.926721e-003, -2.734482e-003, -5.526085e-003, -7.500368e-004, 1.575197e-002, 3.876996e-003, -1.279113e-002, -5.290205e-003, -3.971142e-003, -1.171103e-002, -2.433498e-002, -3.646557e-002, -1.521741e-002, -7.061449e-004, -3.187982e-002, -2.779679e-004, -1.034658e-003, 4.041001e-003, 1.652656e-002, 1.881843e-002, 2.113551e-002, 2.292479e-002, -9.339647e-004, -2.340875e-003, 2.466108e-002, 1.524827e-002, 5.889271e-004, 4.553707e-003, 1.195369e-002, 1.277014e-002, 2.394382e-002, 3.861698e-002, 3.496412e-002, 2.393090e-002, 1.064515e-002, 3.542575e-003, -3.012063e-003, -1.501146e-002, -1.254969e-002, -1.121904e-002, 3.317500e-003, 1.312850e-002, 1.165544e-002, 1.903444e-002, 2.806044e-002, 2.552555e-002, 7.010443e-003, -1.012838e-002, -1.793551e-002, -5.718906e-003, 2.697166e-003, -5.031433e-003, -1.128673e-002, -1.792080e-003, -1.530554e-002, -1.766135e-002, -9.489538e-003, -1.761603e-002, -1.020063e-002,

© ISO/IEC 2004 — All rights reserved


--`,,```,,,,````-`-`,,`,,`,`,,`---

Copyright International Organization for Standardization
Provided by IHS under license with ISO
No reproduction or networking permitted without license from IHS
Not for Resale

6.998096e-003, -2.147237e-002, 8.139600e-003, -4.366453e-003, -3.551745e-003, 1.228592e-002, 1.298998e-002, 1.501442e-002, 2.161744e-002, 1.114162e-002, -6.029964e-004, 3.591847e-002, 2.326870e-002, 2.446766e-003, 2.269193e-004, -1.553580e-003, -8.339878e-003, 3.672522e-003, 2.396653e-002, 2.871967e-002, 1.950121e-002, 8.039205e-003, -8.960185e-003, -1.860867e-002, -2.473634e-002, -1.428465e-002, -1.085264e-002, 5.794419e-003, 2.094993e-002, 3.040617e-002, 3.839058e-002, 3.620559e-002, 2.652218e-002, 1.941947e-003, -2.017855e-002, -2.523650e-002, -7.986848e-003, -9.734995e-003, -1.352952e-002, -3.270865e-003, -6.150130e-003, -9.437485e-003, -6.576875e-003, 2.020939e-003, -6.804890e-003, 1.068100e-003, 1.464023e-002, -1.748927e-002, 7.541355e-003, -5.916887e-003, -1.418003e-002, 9.226264e-003, 9.295384e-003, 1.296570e-003, 1.602438e-002, 1.450222e-002, -1.356341e-002, 2.853102e-002, 2.870140e-002, 1.017392e-002, -3.807652e-003, -1.189629e-002, -1.850619e-002, -1.164201e-002, 9.799082e-003, 1.899307e-002, 2.828684e-002, 2.159196e-002, 1.100887e-002, -8.544015e-004, -8.875473e-003, 2.682035e-003, 4.597330e-003, 1.347170e-002, 2.910206e-002, 3.746518e-002, 3.658848e-002, 2.449593e-002, 3.634235e-003, -1.734589e-002, -2.754152e-002, -2.149244e-002, -8.335282e-003, -1.560693e-002, -9.908264e-003, 2.446931e-003, -1.719267e-002, -5.570448e-003, 1.387769e-002, 1.212166e-002, -1.562520e-003, 1.104969e-002, 1.549077e-002, -1.187944e-002, 9.150405e-003, -5.960430e-003, -1.666289e-002, 9.456799e-003, 9.512831e-003, -7.638144e-003, 7.259856e-003, 1.644531e-002, -2.127015e-002, 8.774636e-003, 3.932139e-002, 1.575462e-002, -4.039726e-003, -7.807325e-003, -3.823655e-003, -1.175248e-003, 1.294943e-003, -5.355317e-003, -3.679638e-003, -5.300725e-004, 3.248352e-003, 6.193972e-003, 4.352499e-003, 8.583571e-003, 1.046203e-002, 2.096693e-002, 2.647212e-002, 2.600673e-002, 2.604500e-002, 1.717737e-002, -8.899308e-003, -2.847667e-002, -3.009165e-002, -1.715271e-002, -7.569958e-003, -1.738142e-002, 1.452060e-003, 4.517634e-003, -2.182846e-002, -7.900650e-003, 1.228676e-002, 1.019231e-002, -1.973871e-003, 5.084026e-003, 1.654802e-002, -1.664902e-003, 1.036187e-002, -8.271084e-003, -1.390788e-002, 2.812057e-003, 3.028872e-004, -1.900780e-002, -1.211601e-002, 7.760781e-003, -1.208844e-002, -9.387282e-003, 3.631211e-002, 1.474983e-002, -4.200334e-003, 3.911796e-004, 7.764511e-003, -8.782093e-003, -2.611038e-002, -3.584494e-002, -3.431911e-002, -1.815688e-002, 2.101329e-003, 1.272223e-002, 1.343163e-002, 1.663017e-002, 1.652742e-002, 1.784440e-002, 1.353350e-002, 5.933275e-003, 6.207938e-003, 5.541929e-003, -3.972256e-003, -1.723778e-002, -1.811575e-002, -7.301581e-003, -7.040154e-003, -5.496871e-003, 2.181909e-002, 1.235627e-002, -1.743103e-002, -3.863329e-003, 6.592427e-003, 1.616251e-003, -1.064406e-004, 7.201867e-003, 1.090119e-002, 1.021771e-002, 1.026676e-002, -7.544166e-003, -1.389960e-002, -4.847700e-003, -2.472691e-003, -1.948767e-002, -2.270692e-002, 1.387239e-004, -2.456856e-003, -1.489979e-002, 7.749067e-003, 5.453209e-003, -5.601280e-003, 6.835658e-003, 1.511468e-002, -4.495579e-003, -2.094756e-002, -2.300684e-002, -2.146769e-002, -1.338298e-002, 3.449446e-004, 8.470248e-003, 9.153429e-003, 1.316574e-002, 1.486064e-002, 5.938669e-003, -6.058069e-003, -1.050303e-002, -1.945872e-003, 2.375303e-003, -3.070094e-004, -4.605905e-003, -3.298529e-003, 1.755835e-003, -1.656653e-003, 1.043476e-002, 3.644024e-002, 9.514767e-003, -5.744372e-003, -3.511410e-003, -6.476755e-003, -7.399491e-004, 5.996049e-004, 5.935745e-003, 1.196467e-002, 1.811297e-002, 6.863200e-003, -3.890300e-003, -6.777459e-003, -5.460683e-003, -5.907770e-004, -1.239877e-002, -1.578841e-002, -9.960680e-004, 8.729705e-003, -7.430832e-003, -1.907751e-002, -1.164799e-002, -6.610401e-003, 8.315447e-003, 1.714950e-002, 1.095040e-002, -4.329527e-003, -4.646026e-003, -4.634509e-003, -4.077655e-003, 1.396490e-003, 3.691096e-003, 7.059774e-003, 9.310893e-003, 9.079203e-003, -2.946068e-003, -1.883815e-002, -2.252322e-002, -1.258467e-002, -4.173343e-003, 3.617503e-003, 5.482076e-003, 1.045753e-002, 9.231328e-003, -1.763243e-003, 1.408835e-002, 2.854240e-002, -2.433320e-003, 2.562526e-003, 8.694720e-003, 8.558777e-004, 1.938243e-003, 2.198735e-003, 3.883735e-004, 1.228077e-002, 2.013575e-002, -2.850119e-003, -6.847375e-003, 6.935961e-003, 2.085138e-003, 6.342938e-003, -7.963239e-003, -1.628508e-002, 7.082004e-004, 1.229877e-002, -1.023053e-002, -2.385051e-002, -1.811940e-002, -3.481211e-003, 1.190311e-002, 2.056491e-002, 1.544305e-002, 2.949971e-003, -3.082768e-004, 2.583744e-003, 5.288208e-003, 5.975846e-003, 3.799599e-003, 2.777710e-003, 5.852370e-003, 2.241403e-003, -9.760847e-003, -1.618876e-002, -1.481351e-002, -1.129099e-002, -3.851693e-003, 8.175315e-003, 2.042823e-002, 2.161677e-002, 9.832383e-003, -5.497351e-003, 2.589905e-003, 1.499617e-003, -1.539984e-002, -9.524303e-004, 1.159582e-002, 1.575344e-003, 6.228827e-003, -6.752997e-004, -1.719901e-002, -2.991902e-003, 1.422311e-002, -1.948844e-002, -4.807601e-003, 1.589991e-002, 9.320085e-003, 1.248668e-002, -3.788449e-003, -1.944515e-002, -5.188753e-003, 1.125581e-002, -1.262964e-002, -5.491964e-003, -1.082237e-002, -4.355561e-003, 8.527447e-003, 1.951183e-002, 1.332646e-002, 2.383648e-004, -8.636596e-003, -7.768828e-003, -5.706563e-003, -7.022975e-003, -8.675962e-003, -5.760238e-003, -3.435564e-003, -1.014668e-002, -1.594448e-002, -1.317249e-002, -1.366710e-002, -1.176223e-002, -4.648564e-003, 9.231793e-003, 2.386022e-002, 1.980432e-002, 5.515952e-003, -1.415223e-002, -1.578428e-002, -1.647751e-002, -1.998730e-002, -1.426547e-002, -6.771568e-003, -3.019991e-003, -2.265335e-004, -1.194960e-002, -2.885440e-002, -1.099500e-002, 8.025585e-003, -1.881270e-002, 7.005209e-003, 2.551199e-002, 1.621271e-002, 1.634192e-002, 3.877577e-003, -4.086882e-003, 1.252597e-003, 9.425157e-003, 1.649083e-003, 5.029642e-003, -8.556250e-004, -8.950027e-003, 1.312655e-003,


© ISO/IEC 2004 — All rights reserved

Copyright International Organization for Standardization
Provided by IHS under license with ISO
No reproduction or networking permitted without license from IHS
Not for Resale

8.552817e-003, 2.665143e-003, -9.144695e-003, -2.182630e-002, -2.395565e-002, -1.664333e-002, -1.174951e-002, -1.281182e-002, -9.819503e-003, -1.362728e-002, -1.789463e-002, -1.607317e-002, -9.942769e-003, -1.024916e-002, -8.552341e-003, -3.241121e-003, 8.616417e-003, 1.711526e-002, 1.295195e-002, 4.855854e-004, -2.237401e-002, -2.199675e-002, 1.675562e-003, -1.315005e-003, -5.693712e-003, -1.214151e-002, -6.164358e-003, 9.434501e-004, -5.636159e-003, -2.840767e-002, -6.866333e-003, 5.030071e-003, -1.484408e-002, 1.103269e-002, 2.879587e-002, 1.538718e-002, 1.000387e-002, 7.734007e-003, 7.993523e-003, 9.249038e-003, 9.138412e-003, 6.283126e-003, 2.191250e-002, 1.605977e-002, 2.250504e-003, -4.984955e-003, 5.324818e-004, -6.423796e-003, -1.113633e-002, -1.903065e-002, -2.587261e-002, -1.904192e-002, -1.163197e-002, -3.882198e-003, 2.050150e-003, -5.135182e-004, -2.779442e-003, 1.623103e-003, 2.011603e-003, -2.608571e-003, -5.149636e-003, 2.990672e-003, 7.943601e-003, 1.251687e-002, 1.497893e-002, 7.048371e-003, -1.092701e-002, -1.012960e-002, 3.168704e-002, 2.541172e-002, 1.582364e-002, 4.932987e-003, 8.529570e-004, 2.380759e-003, -3.691469e-003, -1.170757e-002, 6.993091e-003, 2.069486e-002, -2.513308e-002, -1.819091e-003, 7.291771e-003, -1.661239e-002, -2.260046e-002, -9.478299e-003, -4.984737e-004, 1.469394e-003, 1.758594e-003, 5.973054e-003, 1.949489e-002, 1.711254e-002, 4.721962e-003, -1.418646e-002, -1.018455e-002, -4.798394e-003, -6.119902e-003, -9.814858e-003, -1.521296e-002, -1.256081e-002, -4.460711e-003, 1.558376e-003, 7.634068e-003, 1.548800e-003, -4.327928e-003, -5.223902e-003, -6.550863e-003, -1.035922e-002, -1.259814e-002, -1.521489e-003, 2.037207e-003, 5.244863e-003, 1.470235e-002, 1.142753e-002, -1.968204e-003, -2.152278e-003, 2.863942e-002, 2.579575e-002, 1.406738e-002, 9.895898e-003, 1.636053e-003, 7.810557e-003, -5.176482e-003, -5.144506e-003, 2.212551e-002, 3.405017e-002, -1.392073e-002, -9.086553e-003, -9.541940e-003, -2.552216e-002, -1.819160e-002, 7.440651e-003, 5.969756e-003, 2.530736e-003, -2.198935e-003, -3.829875e-003, 1.607469e-003, 3.679885e-003, 3.056955e-003, -6.018179e-003, -1.018662e-002, -1.206773e-004, -1.109303e-003, 2.885941e-003, 2.722332e-003, 4.383209e-003, 9.697504e-003, 8.548002e-003, 7.587042e-003, -2.547599e-004, -4.979109e-003, -7.650801e-003, -5.968129e-003, -2.151567e-003, -4.177569e-003, 5.206258e-003, -3.052986e-003, -1.011990e-002, 2.754105e-004, 1.764181e-003, -1.056538e-002, -1.367895e-002, 1.628315e-002, 1.236083e-002, 1.435206e-003, -5.230064e-003, -6.726102e-003, 6.548676e-004, -1.859416e-003, 2.504541e-003, 2.645315e-002, 4.031989e-002, -9.611077e-003, -1.512311e-003, 1.875550e-005, -3.439572e-003, 1.858824e-002, 2.583419e-002, 1.114318e-002, 8.568713e-003, 7.064521e-003, -6.145720e-004, -2.108490e-003, -1.212937e-003, 1.240961e-002, 1.767320e-002, 8.263080e-003, 8.567778e-003, 8.086701e-003, 1.126510e-002, 1.951636e-002, 1.872569e-002, 1.137201e-002, 2.832029e-003, -5.293464e-003, -1.423363e-002, -2.133778e-002, -2.038043e-002, -1.275440e-002, 3.810985e-004, 8.404863e-003, 8.558865e-003, -7.696132e-003, -1.196319e-002, 1.908572e-003, 4.773589e-003, -2.030804e-003, -1.309268e-002, 4.468573e-003, 1.422581e-003, 7.211467e-003, -1.635364e-003, -8.946752e-003, 5.023353e-003, 1.909451e-003, -1.104116e-002, 3.270350e-003, 1.744186e-002, 5.764938e-003, 6.506663e-003, 4.223530e-003, 2.807521e-003, 9.039078e-003, 2.027000e-002, 9.141244e-003, 7.143615e-003, 1.441196e-003, -2.021226e-003, 5.485301e-003, 2.120417e-003, 6.973933e-003, 1.318902e-002, 1.376851e-002, 3.329841e-003, -8.232931e-004, 3.512122e-004, 1.349132e-002, 1.496642e-002, 9.539734e-003, 2.986528e-003, -7.277736e-003, -1.310136e-002, -1.615191e-002, -1.256424e-002, -3.234312e-003, 5.736378e-003, 1.341604e-002, 1.032325e-002, -4.346596e-003, -3.116998e-003, 4.029475e-003, 2.634428e-003, 2.469596e-003, -1.383522e-003, -4.609164e-003, -5.035732e-003, 8.548267e-003, 1.199235e-002, 1.284401e-003, 1.147033e-002, 1.966934e-002, -8.263420e-003, -1.703788e-002, -1.860580e-002, 4.580542e-003, -5.339735e-003, -3.235565e-003, -1.719476e-002, -9.878002e-003, 7.552296e-003, -6.088997e-003, -6.087324e-003, -4.231589e-003, -1.000323e-002, -5.175549e-003, -7.564531e-003, -1.382129e-002, -9.797016e-003, -5.098070e-003, -1.127316e-002, -1.530859e-002, -1.600149e-002, -6.046625e-003, -2.521715e-003, -4.057023e-003, -9.266431e-003, -1.988526e-002, -2.531252e-002, -2.065047e-002, -1.259116e-002, 7.539340e-004, 9.713575e-003, 1.467527e-002, 6.127049e-003, -6.885032e-003, -2.927387e-003, -4.372837e-003, -5.572403e-003, 5.217235e-003, 1.078413e-002, -1.195089e-002, -2.672700e-002, 8.763079e-003, 1.743834e-002, 1.176161e-002, 1.804866e-002, 2.880209e-002, 1.563924e-003, -1.858058e-002, -3.730849e-002, -8.625046e-004, -1.250328e-002, -7.332966e-003, -4.833960e-003, 6.588842e-004, 3.310579e-003, -9.409280e-003, -6.375201e-003, 3.208166e-003, -2.798616e-003, 5.109469e-003, -8.649522e-004, -1.808201e-003, -3.220061e-003, 3.297127e-003, 3.049116e-003, -3.313276e-003, -2.374051e-003, -5.470828e-005, -1.867707e-004, -3.006818e-003, -7.711829e-003, -1.117747e-002, -1.426349e-002, -1.067950e-002, -2.437022e-003, 7.705605e-003, 1.739967e-002, 1.721202e-002, 2.529042e-003, -8.263292e-003, -8.627638e-003, -1.045783e-002, -6.190361e-003, 6.080472e-003, 2.729230e-002, -6.658161e-004, -2.930517e-002, 4.780891e-003, 1.435662e-002, 7.853384e-004, 5.947205e-003, 1.842184e-002, 7.616081e-003, 6.800027e-004, -1.856830e-002, -1.132860e-002, -1.602806e-002, 2.075413e-004, 8.937437e-004, -8.590116e-004, -1.198457e-002, -2.294161e-002, -1.653585e-002, -3.537519e-003, -1.802679e-003, 3.387115e-003, -1.237102e-003, -2.919249e-003, 3.575945e-004, 4.827504e-003, 1.969906e-003, 4.952604e-004, 8.692278e-004, 7.950868e-003, 8.892111e-003, 7.302069e-003, 7.376872e-003, 4.577243e-003, -6.046107e-004, -3.968402e-004, 6.713682e-003, 1.330815e-002, 1.999026e-002, 1.565359e-002, 5.675975e-003, -

© ISO/IEC 2004 — All rights reserved


--`,,```,,,,````-`-`,,`,,`,`,,`---

Copyright International Organization for Standardization
Provided by IHS under license with ISO
No reproduction or networking permitted without license from IHS
Not for Resale

7.350582e-003, -5.616790e-003, -4.384297e-003, -2.307640e-003, 1.168891e-002, 3.090858e-002, 3.320098e-003, -1.057446e-002, 8.485995e-003, 1.373093e-002, -2.086899e-002, -3.806437e-002, -2.847399e-002, -1.961157e-002, -1.407595e-002, -2.983721e-002},
{3.753201e-002, 1.540362e-002, 2.715549e-002, 7.349246e-003, -1.067489e-002, -1.528811e-002, -3.376666e-003, 3.571198e-003, 9.581173e-003, 7.808162e-004, -1.064913e-002, -8.894457e-003, -1.729298e-003, 3.637838e-003, 2.331696e-003, -5.377322e-003, -6.963717e-003, -5.638063e-003, 5.202527e-003, 8.532826e-003, 8.479687e-003, -6.627699e-004, -1.620065e-004, 3.414136e-003, 6.834841e-003, 1.133303e-002, 2.062545e-002, 2.636006e-002, 2.776934e-002, 2.071634e-002, 4.360440e-003, 1.043107e-003, -4.940144e-003, -1.412346e-002, -1.959385e-002, -2.464408e-002, -1.282606e-002, 1.371314e-002, 8.646725e-003, -9.020567e-003, -1.123374e-002, 1.187394e-002, 1.605153e-002, 2.479057e-003, 9.956435e-003, 1.117228e-002, 8.166076e-003, -2.455519e-002, -1.424421e-002, -2.343424e-002, -2.680834e-002, -1.496594e-002, -6.315607e-003, -1.499276e-002, -1.706247e-002, -3.146240e-002, -2.096765e-002, -2.140927e-003, 9.349118e-003, 1.252617e-002, 1.931821e-003, 2.944788e-004, 4.550307e-003, 1.179499e-002, 1.190672e-002, 3.455494e-003, -7.294300e-003, -2.060774e-002, -2.979756e-002, -3.102509e-002, -2.425055e-002, -1.240723e-002, -6.320714e-003, -5.361254e-003, -4.268977e-003, -6.918921e-003, -5.466778e-003, -4.813610e-003, -1.127731e-002, -9.151311e-003, -8.672768e-003, -1.980373e-002, -2.321204e-002, -4.338511e-003, 1.534578e-002, 3.183109e-003, -2.164319e-002, -9.069407e-003, 4.204865e-003, 5.403456e-004, -4.185995e-003, -9.644974e-004, 1.137990e-002, -2.740429e-002, -4.877944e-003, -9.519651e-004, -1.493108e-003, 9.480197e-004, -6.629625e-003, -9.916032e-003, -1.804514e-002, -2.036957e-002, -9.509160e-003, 8.802358e-003, 8.336436e-003, 2.734628e-003, 3.290389e-003, 9.415112e-003, 1.065573e-002, 1.541447e-002, 1.273875e-002, 4.076230e-003, 1.219408e-003, -8.722460e-003, -1.599139e-002, -2.211165e-002, -1.681483e-002, -6.125824e-003, 4.389560e-003, 1.152925e-002, 6.437090e-003, -1.399138e-003, -6.438414e-003, -2.855698e-003, -7.376911e-004, -6.174068e-003, 1.984250e-004, 2.753570e-003, -6.989618e-003, -8.143641e-003, 1.588536e-002, 2.512831e-002, -8.875567e-003, -1.650169e-002, 3.670385e-003, 4.636680e-003, -1.056781e-002, -1.458547e-002, 8.153961e-003, -1.989429e-002, 1.318001e-002, 1.445768e-002, 9.928456e-003, 7.167791e-003, 2.862524e-003, 3.482226e-003, -8.182048e-004, -9.817163e-003, -3.326270e-004, 4.548967e-003, 3.663680e-003, 1.805015e-003, 4.723375e-003, 9.692143e-003, 1.900652e-002, 2.794418e-002, 3.086336e-002, 2.645245e-002, 1.888227e-002, 3.848181e-003, -1.075992e-002, -1.702445e-002, -1.339462e-002, 1.509008e-003, 1.843854e-002, 3.469892e-002, 4.257848e-002, 2.818944e-002, 6.047202e-003, 3.132748e-003, 7.023398e-003, -8.253833e-004, -3.739345e-003, -5.839917e-004, 1.184089e-002, 3.217985e-003, 1.176734e-002, 3.538746e-002, 2.452632e-002, -8.082383e-003, 5.316274e-003, 1.918191e-002, -2.710154e-003, -1.387975e-002, -5.135440e-003, -2.417116e-002, 1.515372e-002, 8.844962e-003, 1.037492e-002, -1.446655e-003, 7.087675e-003, 1.368069e-002, 6.059345e-004, -1.194152e-002, -8.939451e-003, -7.098777e-003, -9.223135e-003, -9.565770e-003, -1.866583e-003, 1.552284e-002, 2.971358e-002, 3.617036e-002, 3.495717e-002, 2.475464e-002, 7.059593e-003, -1.442792e-002, -3.367077e-002, -4.376453e-002, -3.646245e-002, -1.882297e-002, 3.608381e-003, 2.653723e-002, 4.294795e-002, 4.106793e-002, 1.900983e-002, 9.110486e-004, -7.426448e-003, -5.311647e-003, -5.851209e-003, -1.392518e-002, -1.092292e-002, 2.565287e-003, -8.208143e-003, 1.043627e-002, 1.726318e-002, -1.162809e-002, -1.374972e-003, 2.268422e-002, 6.078196e-003, -1.228949e-002, 5.840330e-003, -4.025949e-003, 2.943811e-002, 2.121749e-002, -1.838086e-003, -1.534476e-002, 8.406064e-003, -9.601855e-005, -1.998471e-002, -2.305024e-002, -1.520005e-002, -2.224997e-002, -2.501224e-002, -1.272441e-002, 1.470229e-004, 1.249823e-002, 2.147319e-002, 2.511840e-002, 2.438571e-002, 1.413868e-002, -8.544482e-004, -2.448159e-002, -4.642908e-002, -5.542128e-002, -4.484862e-002, -2.035324e-002, 4.131885e-003, 2.119156e-002, 3.150706e-002, 3.120290e-002, 1.877978e-002, -2.928842e-004, -1.186739e-002, -1.625666e-002, -5.457553e-003, 5.002414e-003, -5.790373e-003, -7.837369e-003, -1.328797e-003, -2.052214e-004, 9.757727e-003, -1.934773e-003, -1.277177e-003, 9.368522e-003, 1.095074e-002, -9.554600e-003, 1.805330e-002, 6.115086e-003, 2.962787e-002, 2.041592e-002, -4.249666e-003, 1.197802e-004, 8.787853e-003, -8.875714e-003, -1.682706e-002, -6.896251e-003, -1.512130e-002, -1.979754e-002, -1.726713e-002, -4.807735e-003, 2.844754e-003, 3.642313e-003, 1.008831e-002, 1.710864e-002, 1.718985e-002, 1.564278e-002, 3.604945e-003, -1.413148e-002, -2.963873e-002, -2.742193e-002, -1.251494e-002, 1.581623e-002, 3.786903e-002, 4.083558e-002, 3.642166e-002, 2.830087e-002, 1.876453e-002, -8.894567e-004, -1.519015e-002, -2.102646e-002, -1.831355e-002, 3.607914e-004, 9.828540e-003, -1.270870e-003, -2.555489e-003, 3.159615e-004, -1.915809e-004, -1.097306e-002, -2.387229e-002, 1.609719e-003, 6.784969e-003, -3.768658e-003, 2.143730e-002, 6.538889e-003, 2.344533e-002, 1.934797e-002, 4.816613e-003, 1.372847e-002, 3.134700e-003, -1.191111e-003, 1.309341e-002, 5.380564e-003, -6.269017e-003, -7.183822e-003, -8.067648e-003, -1.183771e-002, -1.331071e-002, -2.103417e-002, -1.349532e-002, -2.541746e-003, 4.553232e-003, 2.418520e-003, -7.261088e-003, -2.138645e-002, -2.662628e-002, -1.669583e-002, 6.685179e-003, 3.034783e-002, 4.555367e-002, 4.076054e-002, 3.463420e-002, 2.595710e-002, 1.768752e-002, -1.296839e-003, -2.367999e-002, -2.913884e-002, -1.920322e-002, -4.091059e-003, 7.437507e-003, 9.847585e-003, -3.526647e-003, -9.339551e-003, -5.369818e-003, -1.500270e-002, -2.746376e-002, -2.819712e-004, 3.550284e-003, 1.739490e-003,


© ISO/IEC 2004 — All rights reserved

--`,,```,,,,````-`-`,,`,,`,`,,`---

Copyright International Organization for Standardization
Provided by IHS under license with ISO
No reproduction or networking permitted without license from IHS
Not for Resale

1.907527e-002, 1.235917e-003, 1.631661e-002, 2.132302e-002, 1.361775e-002, 1.096322e-002, -2.429388e-003, 1.604262e-002, 2.660933e-002, 1.425912e-002, 7.114039e-003, 5.792269e-003, -4.449088e-003, -2.088650e-002, -3.074280e-002, -3.917126e-002, -3.013597e-002, -1.646916e-002, -7.773297e-003, -1.153568e-002, -2.584670e-002, -3.927658e-002, -3.994719e-002, -2.649374e-002, -1.909806e-003, 1.796903e-002, 2.595872e-002, 2.523810e-002, 2.011400e-002, 1.501396e-002, 1.167272e-002, -2.276424e-003, -2.123154e-002, -3.129455e-002, -2.762072e-002, -5.581350e-003, 7.474908e-003, 7.761554e-003, -2.732238e-003, -1.111332e-002, -1.015382e-002, -1.533351e-002, -2.462763e-002, -1.813119e-003, -4.413140e-003, -2.346654e-003, 1.557081e-002, -7.580154e-003, 1.400790e-002, 2.544839e-002, 2.177580e-002, 1.092895e-002, 1.133129e-003, 3.100780e-002, 2.919117e-002, 1.773640e-002, 1.543325e-002, 1.635372e-002, 2.846588e-003, -1.498521e-002, -2.671085e-002, -3.184587e-002, -2.856773e-002, -1.448936e-002, -5.128529e-003, -1.057301e-002, -2.836409e-002, -4.416600e-002, -4.337803e-002, -3.037960e-002, -8.084768e-003, 4.851343e-003, 7.553074e-003, 3.795892e-003, -1.998789e-004, -3.132065e-005, 3.601425e-003, -2.565812e-003, -1.681308e-002, -2.203853e-002, -2.346441e-002, -1.508701e-002, 8.267478e-003, 9.884458e-003, -4.289693e-003, -1.485069e-002, -8.326760e-003, -5.013725e-003, -1.301715e-002, -3.304337e-003, -2.969365e-003, -1.185919e-002, 9.159141e-003, -1.122381e-003, 1.326709e-002, 3.378110e-002, 2.460997e-002, 1.367002e-002, 1.333105e-002, 3.421087e-002, 1.846252e-002, 9.025317e-003, 2.342871e-002, 3.028182e-002, 1.048617e-002, -1.040926e-003, -2.477911e-003, -2.025837e-003, 6.695590e-004, 4.611673e-003, 1.073697e-002, 6.176387e-003, -1.297225e-002, -2.532475e-002, -2.430194e-002, -1.309564e-002, 2.231856e-003, 8.896777e-003, 5.435939e-003, -3.814743e-003, -1.039136e-002, -9.537661e-003, -3.860321e-003, -1.792440e-003, -8.256272e-003, -1.303871e-002, -1.566704e-002, -8.703873e-003, 2.419303e-003, 1.529553e-002, -7.752420e-004, -1.149997e-002, -4.597672e-003, 4.056169e-003, -4.789781e-003, -3.080598e-003, -2.977967e-003, -1.738796e-002, -9.757278e-004, -1.139171e-002, 7.551735e-003, 2.550769e-002, 1.613447e-002, 1.285055e-002, 1.873631e-002, 2.754394e-002, 3.370517e-004, -6.479274e-003, 3.074998e-002, 3.858124e-002, 1.923369e-002, 1.434174e-002, 1.975679e-002, 2.538482e-002, 2.706953e-002, 2.635703e-002, 2.715115e-002, 2.186809e-002, 7.234401e-003, 1.506432e-003, 1.559482e-004, 1.078884e-002, 1.941037e-002, 1.747449e-002, 4.278820e-003, -8.994334e-003, -1.380279e-002, -1.291303e-002, -8.611923e-003, -3.532163e-003, -2.973734e-003, -6.957974e-003, -1.599582e-002, -4.092493e-003, 2.046014e-003, 1.459072e-002, -1.366738e-003, -8.814850e-003, -3.609080e-003, 9.016039e-003, 1.260751e-003, 3.788401e-003, -1.418375e-003, -1.625549e-002, -1.449373e-002, -1.781870e-002, 1.703294e-003, -1.761695e-003, 3.560203e-003, 4.964214e-003, 1.194592e-002, 1.286115e-002, -1.416798e-002, -1.028153e-002, 3.526554e-002, 4.159988e-002, 2.144339e-002, 1.599681e-002, 2.642120e-002, 3.387839e-002, 3.787979e-002, 3.518421e-002, 3.221665e-002, 3.050884e-002, 2.384531e-002, 2.335538e-002, 2.535178e-002, 3.421456e-002, 3.804234e-002, 2.909965e-002, 9.861522e-003, -8.343874e-003, -1.824024e-002, -1.976132e-002, -1.424545e-002, -1.189649e-002, -9.292788e-003, -1.217052e-003, -1.113861e-002, -5.092342e-003, 8.559358e-004, 3.321597e-003, -3.636330e-003, -9.938520e-003, -1.673688e-003, 1.052511e-002, 9.960236e-003, 1.259500e-002, 5.496146e-003, -1.215194e-002, -2.171881e-002, -1.727285e-002, -2.717428e-004, -1.693516e-002, -3.715149e-003, -4.237723e-003, 1.914686e-003, 6.385881e-003, -2.649461e-002, -1.241393e-002, 3.365195e-002, 3.207238e-002, 1.544546e-002, 7.882163e-003, 1.568885e-002, 2.045491e-002, 2.361953e-002, 1.800934e-002, 1.687178e-002, 2.230950e-002, 2.865585e-002, 3.302184e-002, 3.674473e-002, 4.279617e-002, 4.593397e-002, 3.627351e-002, 1.834502e-002, -5.337833e-003, -2.015199e-002, -2.473769e-002, -2.348486e-002, -2.012741e-002, -1.861847e-002, -3.036264e-003, -3.882446e-003, -5.032492e-003, -1.722020e-003, -3.300202e-003, -6.463828e-003, -1.517405e-002, -2.044405e-003, 9.515920e-003, 1.585971e-002, 1.521853e-002, 6.904407e-003, -9.962723e-003, -2.246106e-002, -9.759880e-003, -3.426550e-003, -2.472370e-002, -3.506406e-003, -1.098498e-002, -3.509058e-003, 1.194877e-003, -2.699278e-002, -1.186263e-002, 2.762798e-002, 1.705212e-002, 1.834794e-004, -2.652537e-003, -6.912722e-004, -1.063259e-003, -5.643756e-003, -1.359392e-002, -1.112076e-002, -9.314147e-004, 1.234440e-002, 1.644178e-002, 2.301584e-002, 3.317926e-002, 3.687365e-002, 2.790685e-002, 8.514496e-003, -1.313127e-002, -2.818729e-002, -3.268731e-002, -3.153041e-002, -2.652270e-002, -2.119949e-002, -2.751383e-003, 6.288956e-003, 8.780033e-004, -6.577177e-003, -3.482908e-003, -3.062966e-003, -1.435638e-002, -5.963872e-003, 9.448594e-003, 1.993937e-002, -5.892234e-003, 9.215664e-003, -5.499819e-003, -2.019848e-002, 3.357102e-003, 1.041093e-003, -1.747828e-002, -2.060626e-003, -1.746413e-002, -9.515864e-003, -4.352806e-003, -2.363307e-002, -1.564213e-002, 1.168665e-002, -3.447318e-003, -1.391564e-002, -1.843029e-002, -2.158813e-002, -2.980600e-002, -3.862185e-002, -4.088637e-002, -3.409445e-002, -2.310159e-002, -1.217601e-002, -5.374331e-003, -9.958290e-004, 1.112498e-002, 1.785579e-002, 1.452678e-002, -2.266736e-003, -2.194148e-002, -3.728425e-002, -3.710846e-002, -3.169630e-002, -2.447506e-002, -1.436907e-002, 4.178241e-003, 1.989706e-002, 1.262506e-002, -8.363359e-003, -1.064003e-003, 3.291143e-003, -8.123161e-003, -5.309034e-003, 9.369104e-003, 1.933783e-002, -8.896691e-003, 1.659000e-002, 1.704879e-003, -1.538747e-002, 1.560734e-002, 6.709871e-003, -8.251340e-003, 3.016300e-003, -2.272790e-002, -1.345788e-002, -6.667287e-003, -1.981348e-002, -1.725662e-002, 1.131106e-003, -9.670939e-003, -1.823603e-002, -2.629685e-002, -3.194938e-002, -3.882614e-002, -

© ISO/IEC 2004 — All rights reserved


Copyright International Organization for Standardization
Provided by IHS under license with ISO
No reproduction or networking permitted without license from IHS
Not for Resale

3.829859e-002, -3.272826e-002, -3.014858e-002, -2.561114e-002, -2.461944e-002, -2.122957e-002, -1.406091e-002, -1.557452e-003, 8.424556e-003, 8.635455e-003, 3.597210e-003, -8.063050e-003, -1.529029e-002, -1.090752e-002, -3.619760e-003, -3.712352e-003, -2.794659e-004, 1.649236e-002, 3.228058e-002, 2.737985e-002, -3.167039e-003, -5.705706e-003, 9.009154e-003, 3.240052e-003, -2.581527e-003, 3.236616e-003, 1.347368e-002, -1.926457e-002, 1.773123e-002, 6.584077e-003, -9.727908e-003, 2.237591e-002, 1.251463e-002, 1.406277e-003, 9.217259e-003, -2.119425e-002, -7.412405e-003, -2.615198e-003, -1.630334e-002, -1.887516e-002, -1.450302e-002, -1.196326e-002, -1.403406e-002, -2.416331e-002, -2.916111e-002, -2.819841e-002, -1.567012e-002, 1.492194e-003, 7.063697e-003, -5.894486e-003, -2.169296e-002, -2.420137e-002, -2.257560e-002, -9.808089e-003, 7.085704e-003, 2.024434e-002, 2.631189e-002, 2.475289e-002, 2.441398e-002, 2.350921e-002, 1.671048e-002, 6.416078e-003, 5.876073e-003, 1.751240e-002, 3.045460e-002, 3.122887e-002, 8.146090e-003, -7.234793e-003, 1.283068e-002, 1.032531e-002, 3.187172e-003, 1.846184e-003, 7.436898e-003, -2.288898e-002, 1.697593e-002, 1.007953e-002, -5.362128e-003, 1.759160e-002, 1.166104e-002, 5.124184e-003, 1.631544e-002, -1.131162e-002, -1.469745e-003, -1.868423e-003, -1.723122e-002, -1.796219e-002, -1.416242e-002, -3.278835e-003, -8.069604e-003, -3.366079e-002, -4.647058e-002, -4.176306e-002, -1.399887e-002, 2.075671e-002, 3.857714e-002, 2.766346e-002, -2.808306e-003, -2.264077e-002, -2.670637e-002, -1.640582e-002, 7.814903e-003, 3.404037e-002, 4.538161e-002, 4.538793e-002, 3.519454e-002, 1.855810e-002, -1.645396e-003, -2.220333e-002, -3.051348e-002, -2.073488e-002, 5.129592e-003, 2.354229e-002, 1.627687e-002, -3.163350e-003, 1.381445e-002, 1.798830e-002, 1.264148e-002, 4.043690e-003, 8.390548e-003, -2.188801e-002, 1.812539e-002, 9.447340e-003, 3.726662e-003, 1.674142e-002, 1.071262e-002, 8.861175e-003, 2.249149e-002, 1.911695e-003, 1.054201e-002, -5.537306e-003, -2.014593e-002, -4.318893e-003, 1.739303e-002, 3.586963e-002, 1.318471e-002, -2.295365e-002, -4.194249e-002, -4.950814e-002, -3.686215e-002, -2.613028e-003, 3.237236e-002, 4.425560e-002, 2.066851e-002, -1.740883e-002, -3.168991e-002, -2.488215e-002, 3.054401e-003, 3.780605e-002, 5.035052e-002, 4.172830e-002, 3.002739e-002, 1.548530e-002, -2.234637e-003, -1.728864e-002, -2.046580e-002, -2.361808e-002, -1.437902e-002, 6.381022e-003, 1.380888e-002, 3.661254e-003, 7.250218e-003, 1.923044e-002, 1.904181e-002, 7.386919e-003, 9.899625e-003, -1.969071e-002, 1.757967e-002, 4.229249e-003, 6.086077e-003, 9.393094e-003, -4.482152e-003, 6.083288e-003, 2.017954e-002, 8.373416e-003, 1.866094e-002, -9.047530e-003, -8.115326e-003, 2.557724e-002, 5.771850e-002, 4.086052e-002, 5.538624e-003, -1.300264e-002, -2.247582e-002, -3.294652e-002, -3.382973e-002, -1.712715e-002, 1.300035e-002, 3.338727e-002, 3.196730e-002, -1.156943e-002, -3.270102e-002, -2.643695e-002, 1.736258e-003, 4.094931e-002, 5.490744e-002, 2.626714e-002, -6.285667e-003, -1.802811e-002, -1.707259e-002, -8.857248e-003, -4.037011e-003, -7.669014e-003, -4.689206e-003, 4.246195e-003, 1.111392e-002, 7.035170e-003, -3.054406e-003, 1.682264e-002, 1.259440e-002, 6.169904e-003, 1.932509e-002, -8.491411e-003, 2.507807e-002, 4.121197e-003, 4.878802e-003, 5.048055e-003, 8.099921e-004, -5.513722e-003, 2.186088e-003, 1.282217e-002, 1.614653e-002, -1.268717e-002, 7.354558e-003, 3.295364e-002, 2.054413e-002, -1.564864e-002, -3.763954e-002, -3.553203e-002, -2.581166e-002, -1.894760e-002, -1.014381e-002, 7.410219e-003, 1.599011e-002, 3.426144e-002, 4.301767e-002, 1.013488e-002, -2.015062e-002, -1.537107e-002, 1.805955e-002, 5.384057e-002, 5.749102e-002, 8.895542e-003, -1.431827e-002, -9.280951e-003, 1.085177e-002, 2.452788e-002, 1.802310e-002, -3.708721e-003, -1.239194e-002, -6.623895e-003, 7.067636e-003, 1.756248e-002, -4.638637e-003, 5.628037e-003, -2.973137e-003, 7.266711e-003, 2.785230e-002, 1.241150e-003, 2.882301e-002, 4.815647e-003, -1.011150e-002, -7.874007e-003, 9.116581e-003, -5.904664e-003, -1.414009e-002, 1.067678e-002, 1.307956e-002, -1.833825e-002, 2.290636e-003, -1.292642e-002, -3.698845e-002, -4.171553e-002, -4.606164e-002, -4.137233e-002, -2.952128e-002, -1.833413e-002, -2.054417e-002, -2.942644e-002, -5.303145e-003, 2.626369e-002, 4.511508e-002, 1.930167e-002, -1.933923e-003, 2.796087e-003, 3.005758e-002, 4.807675e-002, 4.764681e-002, 2.680002e-003, -2.140299e-002, -1.078906e-002, 3.036718e-002, 4.569433e-002, 2.871537e-002, 1.491830e-002, -2.501116e-003, -9.855999e-003, -1.576164e-002, -5.836762e-003, -2.428342e-002, -1.568929e-002, -1.425369e-002, -1.836407e-003, 2.516440e-002, 1.062369e-002, 1.362318e-002, 2.616110e-003, -2.253735e-002, -2.734810e-002, 4.808296e-003, -1.862701e-003, -2.316167e-002, 4.290014e-003, 3.103770e-003, -2.024909e-002, -1.086931e-002, -4.217909e-002, -4.469507e-002, -3.366336e-002, -2.610658e-002, -4.568445e-002, -4.006055e-002, -4.183595e-002, -3.785677e-002, -6.914788e-002, -4.169261e-002, 1.830139e-003, 2.531799e-002, 2.567062e-002, 3.156198e-002, 3.221337e-002, 2.517642e-002, 2.442631e-002, 3.214303e-002, -1.499726e-003, -2.823243e-002, -1.661071e-002, 4.530609e-002, 6.331450e-002, 1.034027e-002, -4.740482e-003, 2.678329e-003, 2.631724e-003, -1.898132e-002, -3.243310e-002, -4.697691e-002, -3.981121e-002, -2.139036e-002, -3.476668e-003, 1.321793e-002, 2.011623e-003, 1.116537e-002, -8.291421e-003, -4.153094e-002, -3.334479e-002, 3.732296e-003, 4.124616e-003, -3.032658e-002, -2.881751e-003, -4.294730e-003, -1.216514e-002, 6.244986e-003, -2.013904e-002, -1.942291e-002, 1.737849e-002, 1.486756e-002, -3.609143e-002, -3.208413e-002, -2.047456e-002, -4.142829e-002, -7.641256e-002, -2.548041e-002, 8.415474e-003, -3.933854e-003, -5.860592e-003, 1.620453e-002, 2.357966e-002, 1.145237e-002, -1.102756e-002, 8.245895e-003, 8.636711e-003, -3.343622e-002, -1.390083e-002, 4.037689e-002, 3.635812e-002, -


© ISO/IEC 2004 — All rights reserved

Copyright International Organization for Standardization
Provided by IHS under license with ISO
No reproduction or networking permitted without license from IHS
Not for Resale

2.569043e-002, -1.207664e-002, 5.901459e-003, 7.178854e-003, -1.285643e-002, -4.011832e-002, -5.233599e-002, -5.075318e-002, -1.750452e-002, -8.858339e-003, -1.219154e-002, -1.714820e-002, -6.488236e-004, -1.709114e-002, -3.772789e-002, -2.963732e-002, 8.659472e-003, 1.094093e-002, -2.522714e-002, -9.479742e-003, -8.025646e-003, -2.975691e-003, 1.197877e-002, 9.683645e-004, 2.275881e-002, 6.575853e-002, 7.053893e-002, 2.305682e-002, -1.671098e-002, -2.853916e-002, -4.211640e-002, -3.496358e-002, -6.814031e-003, -4.958004e-003, -4.116205e-002, -4.380093e-002, -2.484293e-003, 6.153223e-003, -3.299495e-005, -2.623934e-002, -2.424579e-002, 9.907144e-003, 1.822860e-003, -5.726142e-003, 8.217500e-003, 6.134681e-003, 2.741966e-003, 3.541871e-002, 5.208925e-002, 3.027653e-002, 2.794305e-003, 2.518425e-003, -1.289119e-002, -2.554012e-002, -9.888633e-003, -2.611329e-002, -2.029268e-002, -1.711975e-002, -4.757212e-003, -1.367506e-002, -2.853255e-002, -2.227461e-002, 1.075106e-002, 1.273922e-002, -2.058494e-002, -5.247461e-003, -7.556273e-003, -5.728554e-003, 1.112635e-002, 1.236976e-002, 2.727772e-002, 6.452907e-002, 8.469575e-002, 6.476306e-002, 3.683742e-002, 1.658154e-002, 4.089990e-003, -4.885678e-003, -1.068227e-002, -3.277597e-002, -5.767489e-002, -3.322596e-002, -2.046908e-003, -3.134152e-003, -7.507795e-003, -1.865673e-002, -4.303103e-002, -1.151864e-002, 2.113792e-002, 4.126427e-002, 5.827568e-002, 7.109485e-002, 7.693053e-002, 8.954123e-002, 8.246024e-002, 5.401579e-002, 1.454784e-002, 2.023127e-002, 7.951088e-003, -7.823435e-003, -7.453698e-003, -3.266018e-002, -2.350584e-002, -1.181757e-002, -1.132761e-002, -8.995702e-003, -1.431219e-002, -1.916803e-002, -1.268635e-003, 6.561196e-003, -1.394353e-002, -1.019541e-002, -1.127802e-002, -6.995182e-003, 1.989139e-003, 1.640890e-002, 2.991249e-002, 3.275172e-002, 4.547844e-002, 3.655288e-002, 1.526214e-002, -5.264957e-003, -2.393897e-002, -3.208523e-002, -3.461908e-002, -4.027028e-002, -3.678933e-002, -2.805240e-003, 1.493129e-002, -1.486474e-004, -3.444593e-003, 8.461468e-004, -2.786718e-002, -4.064191e-002, -1.909202e-002, -4.854721e-004, 2.741184e-002, 5.170311e-002, 6.719105e-002, 7.059796e-002, 6.952251e-002, 4.669936e-002, 2.306039e-002, 2.995830e-002, 2.153280e-002, 6.330570e-003, 9.150540e-003, -1.752557e-002, -1.864616e-002, -6.377491e-003, -1.698244e-002, -1.176766e-002, -8.984391e-003, -1.699567e-002, -1.213272e-002, 6.883305e-004, -6.995582e-003, -8.297679e-003, -4.850034e-003, -5.045002e-003, -3.937372e-003, 1.181938e-002, 2.760229e-002, 9.805787e-003, -1.508995e-003, -1.431067e-002, -2.878035e-002, -4.515568e-002, -5.460330e-002, -5.417057e-002, -4.281983e-002, -2.890143e-002, -4.351137e-004, 2.382946e-002, 2.543295e-002, 8.689089e-003, 4.116873e-003, 1.572430e-002, 1.303664e-002, -2.317425e-002, -4.121053e-002, -4.073827e-002, -2.707418e-002, -6.411819e-003, 9.959020e-003, 2.000304e-002, 2.460220e-002, 2.027607e-002, 1.466995e-002, 3.334375e-002, 3.161021e-002, 6.670601e-003, 1.981948e-002, -1.525548e-003, -2.482059e-002, -6.917611e-003, -1.521385e-002, -3.825709e-002, -1.505391e-002, -2.631391e-002, -2.143911e-002, 2.325648e-003, -4.687979e-003, -1.072809e-002, 1.955262e-003, 3.921084e-003, -5.824036e-003, -8.350275e-004, 1.096133e-002, 1.048931e-003, -2.012813e-002, -4.581381e-002, -5.628191e-002, -6.375609e-002, -5.781927e-002, -3.757224e-002, -3.363330e-003, 1.804875e-002, 3.224539e-002, 3.124162e-002, 2.893240e-002, 1.328124e-002, 3.662408e-003, 1.553545e-002, 4.436280e-002, 2.760147e-002, -7.893909e-003, -3.968100e-002, -5.599988e-002, -5.169079e-002, -3.994125e-002, -2.082570e-002, -7.248662e-003, -2.142851e-004, 1.786038e-003, 2.267071e-002, 2.741093e-002, 3.602534e-003, 1.611762e-002, 5.142729e-003, -1.837020e-002, -1.824266e-003, -2.283142e-004, -3.445458e-002, -2.716142e-003, -2.549665e-002, -2.357505e-002, 7.615121e-003, -2.309004e-004, -1.444587e-002, 5.707317e-003, 8.524117e-003, -7.959992e-003, -7.326314e-003, -1.424431e-003, -1.022959e-002, -1.221885e-002, -3.005010e-002, -3.328095e-002, -2.946797e-002, -1.257322e-002, 1.273128e-002, 4.200184e-002, 4.691161e-002, 3.249192e-002, 1.660359e-002, 9.049031e-003, -3.701264e-003, -1.100273e-002, -2.129000e-003, 2.961249e-002, 6.731781e-002, 5.082466e-002, 4.225862e-003, -3.377217e-002, -4.933468e-002, -5.179836e-002, -4.010741e-002, -2.998987e-002, -2.685498e-002, -1.097196e-002, 1.348402e-002, 1.685556e-002, -1.079023e-003, 1.114257e-002, 1.072484e-002, -9.310090e-003, 2.953089e-003, 7.779503e-003, -1.584868e-002, 4.108059e-004, -1.828856e-002, -1.743610e-002, 1.424000e-002, 6.910203e-003, -1.088555e-002, 1.304500e-002, 1.007804e-002, -1.064489e-002, -1.175636e-002, -1.081948e-002, -1.438382e-002, -1.420689e-002, -1.241790e-002, -4.611413e-003, 7.170323e-003, 2.776096e-002, 4.899929e-002, 5.990643e-002, 4.067274e-002, 4.613057e-003, -7.198232e-003, -1.049279e-002, -2.295159e-002, -2.942437e-002, -1.585378e-002, 5.873965e-003, 5.235643e-002, 7.369481e-002, 5.755824e-002, 2.065474e-002, -1.035298e-002, -2.903232e-002, -3.639222e-002, -3.827332e-002, -3.874504e-002, -2.086855e-002, 3.191933e-003, 8.178225e-003, -4.864266e-003, 1.071631e-002, 1.738378e-002, 4.070010e-003, 5.327007e-003, 1.531510e-002, 1.863863e-002, 9.552066e-003, -7.434934e-003, -1.616611e-003, 2.620090e-002, 2.251021e-002, -3.022165e-004, 1.757362e-002, 8.681030e-003, -1.247261e-002, -1.939306e-002, -1.999451e-002, -2.204563e-002, -2.158282e-002, -1.711038e-002, -6.506489e-003, 1.000369e-002, 2.920084e-002, 4.183306e-002, 5.507901e-002, 2.166262e-002, -6.540427e-003, -2.184226e-003, -7.367721e-003, -1.614866e-002, -1.566849e-002, -3.986796e-003, 2.345057e-003, 2.051737e-002, 4.185208e-002, 4.245667e-002, 2.547838e-002, -3.212795e-003, -3.017469e-002, -4.481507e-002, -5.048267e-002, -4.536179e-002, -1.864131e-002, -3.546839e-003, -7.978600e-004, -6.488462e-003, 1.793679e-002, 1.662291e-002, 5.473990e-003, 9.564387e-003, 1.698853e-002, 2.129028e-002, 1.379968e-002, 3.015398e-003,

© ISO/IEC 2004 — All rights reserved


Copyright International Organization for Standardization
Provided by IHS under license with ISO
No reproduction or networking permitted without license from IHS
Not for Resale

7.200614e-003, 2.909754e-002, 2.297121e-002, 5.553474e-003, 2.499523e-002, 1.552454e-002, -9.375661e-003, -1.743759e-002, -1.938318e-002, -2.490179e-002, -3.244404e-002, -2.577354e-002, -1.269182e-002, 4.768636e-003, 2.218066e-002, 4.004252e-002, 5.142158e-002, 1.795002e-002, 6.711090e-003, 1.210922e-002, -1.079478e-003, 1.806792e-003, 1.238563e-002, 1.816648e-002, 1.115314e-002, -2.375858e-003, 1.333518e-003, 8.249648e-004, -6.139032e-004, -1.659873e-002, -3.974700e-002, -5.241172e-002, -5.411801e-002, -3.930375e-002, -1.259121e-002, -1.647900e-004, 3.817070e-003, -7.211623e-005, 1.735521e-002, 1.390198e-002, 3.604808e-003, 8.580105e-003, 1.887714e-004, 1.183767e-002, 1.480864e-002, 2.658706e-003, 1.071937e-002, 1.787015e-002, 1.138560e-002, -1.496319e-002, 2.165253e-002, 2.359638e-002, -6.390825e-003, -9.815621e-003, -1.102499e-002, -1.576877e-002, -2.565344e-002, -2.118082e-002, -9.399599e-003, 5.218852e-003, 2.381798e-002, 4.548258e-002, 4.649725e-002, 2.838312e-002, 2.287203e-002, 2.543856e-003, -1.709801e-002, -7.542633e-003, 7.807837e-003, 3.227497e-002, 3.003777e-002, 9.159591e-003, -6.181236e-003, -1.522509e-002, -2.114156e-002, -2.467461e-002, -3.424328e-002, -4.438996e-002, -4.402067e-002, -2.166974e-002, 5.888456e-004, 4.544735e-003, 7.853528e-003, 1.868014e-003, 1.332322e-002, 1.539357e-002, 6.187260e-003, -4.630136e-003, -1.266613e-002, 7.476332e-003, 1.615784e-002, -4.516081e-003, 1.540815e-003, 9.100748e-003, 4.098462e-003, -3.341729e-002, -1.040537e-002, 2.104736e-003, -1.308911e-002, -3.027350e-003, 1.356867e-003, -3.199034e-003, -1.373913e-002, -1.219756e-002, -4.303643e-003, 9.409767e-003, 2.419198e-002, 3.867603e-002, 4.577397e-002, 4.277023e-002, 2.934319e-002, -3.797123e-003, -3.176784e-002, -2.622723e-002, -1.214910e-002, 6.964207e-003, 1.971345e-002, 1.228775e-002, -1.441590e-003, -1.698099e-002, -2.498055e-002, -2.387967e-002, -1.882780e-002, -2.356225e-002, -2.355585e-002, -3.337979e-003, 1.476326e-002, 8.708034e-003, 3.657897e-003, -3.623712e-003, 1.768838e-003, 1.582844e-002, -1.036781e-003, -1.990510e-002, -1.248158e-002, 1.580163e-002, 1.657561e-002, -8.775319e-003, -1.786654e-002, -1.084395e-002, -3.247425e-003, -3.623825e-002, -2.486087e-002, -7.160941e-003, -1.260516e-002, 7.827926e-003, 1.356322e-002, 6.367047e-003, -1.034341e-003, -7.443078e-003, -1.925921e-003, 7.369388e-003, 1.120020e-002, 1.552550e-002, 2.544407e-002, 2.485728e-002, 1.274314e-002, -9.519253e-003, -2.159047e-002, -2.594018e-002, -1.853283e-002, 6.214960e-003, 1.932638e-002, 1.315140e-002, -3.728708e-003, -1.260983e-002, -1.644552e-002, -1.533719e-002, -9.527266e-003, -1.109335e-002, -4.345760e-003, 1.397719e-002, 2.576807e-002, 6.356493e-003, 8.210871e-004, -1.126061e-002, -5.076278e-003, 1.066205e-002, -1.049464e-002, -2.614719e-002, -5.102672e-003, 2.102021e-002, 1.524029e-002, 9.456111e-003, -2.366436e-002, -2.393667e-002, -4.577263e-003, -1.586585e-002, -1.156014e-002, 1.228379e-003, -4.738290e-003, 1.550275e-002, 2.127113e-002, 1.161118e-002, 7.132096e-003, -2.928073e-003, -4.540656e-003, -4.589796e-003, -1.700921e-002, -1.827084e-002, -4.648417e-004, 7.123295e-003, 4.455456e-003, -4.442041e-003, -5.860354e-003, -3.505304e-003, -3.188574e-003, 6.357102e-003, 1.091083e-002, 5.826516e-003, -5.446425e-003, -8.382179e-003, -1.925297e-003, 4.859480e-003, 8.000015e-003, 9.860239e-004, 1.305839e-002, 2.976871e-002, 2.939456e-002, 6.246424e-003, 8.019071e-004, -1.027177e-002, -4.511321e-003, 1.397396e-002, -1.439329e-003, -9.147067e-003, 9.152861e-003, 2.168738e-002, 3.258450e-003, 1.106201e-003, -2.046254e-002, -2.743978e-002, -7.168400e-003, 1.379604e-003, 8.838026e-003, 1.268550e-002, -2.240912e-003, 1.144211e-002, 2.451345e-002, 9.940774e-003, 6.697164e-003, -6.541142e-003, -1.353768e-002, -2.190130e-002, -3.986495e-002, -3.447766e-002, -3.608295e-003, 1.395102e-002, 1.448708e-002, 7.932518e-003, 2.518012e-003, 1.756381e-003, -3.186702e-004, -3.309569e-003, -1.313390e-002, -2.635338e-002, -3.341456e-002, -2.151883e-002, -2.247533e-003, 1.605795e-002, 1.875967e-002, 6.904655e-003, 2.370983e-002, 3.895536e-002, 2.507872e-002, 1.140697e-002, 9.327371e-003, 1.689309e-003, 9.842139e-003, 1.868676e-002, 8.068127e-003, 1.211426e-002, 2.384802e-002, 2.495142e-002, 3.286888e-003, -3.790983e-004, -1.143982e-002, -2.669909e-002, -1.051002e-002, -2.606284e-003, 8.341384e-003, 4.120922e-003, -1.538782e-002, -1.004217e-002, 1.773893e-002, 7.205100e-003, -1.157097e-003, -7.526703e-003, -1.837199e-002, -3.158073e-002, -2.372289e-002, 1.671987e-003, 2.842159e-002, 3.439656e-002, 3.373568e-002, 2.793764e-002, 2.128129e-002, 1.883369e-002, 1.458478e-002, 7.840051e-003, -1.899373e-003, -1.806341e-002, -2.779790e-002, -2.439613e-002, -7.378011e-003, 1.785620e-002, 1.930444e-002, 8.115485e-003, 2.116815e-002, 3.271001e-002, 1.043427e-002, 7.350756e-003, 9.956497e-003, 7.392773e-003, 4.749051e-003, 6.494346e-003, 8.405405e-003, 1.921332e-002, -5.070464e-003, 2.681775e-002, 6.581093e-004, 9.590188e-004, -2.873385e-003, -6.762964e-003, -6.063207e-003, -1.234305e-002, -7.020407e-003, -1.592693e-002, -3.196240e-002, -2.531257e-002, 4.259109e-003, 1.581564e-003, -7.848544e-003, -1.276648e-002, -2.735314e-002, -3.777879e-002, -2.067324e-002, 3.149847e-005, 6.042668e-003, 8.785885e-003, 2.414502e-003, 5.608333e-003, 8.230206e-003, 9.327924e-003, 7.016091e-003, 2.130664e-003, -8.537986e-003, -2.111671e-002, -3.208004e-002, -3.409294e-002, -1.336944e-002, 1.319273e-002, 1.158474e-002, 3.897106e-003, 1.316680e-002, 1.034022e-002, -8.922833e-003, -3.951113e-003, 4.793632e-003, 1.685394e-003, -1.296486e-002, -1.193535e-002, 1.251983e-003, 1.355744e-002, -1.982312e-002, 1.798457e-002, 1.014173e-002, 1.059700e-002, 6.563250e-003, 8.261689e-003, 6.268920e-003, -5.584003e-003, -1.240468e-002, -2.440450e-002, -3.711574e-002, -2.614293e-002, -7.063468e-003, 9.148279e-004, -1.161243e-002, -1.277370e-002, -2.131417e-002, -2.646369e-002, -2.612226e-002, -1.454166e-002, -


© ISO/IEC 2004 — All rights reserved

Copyright International Organization for Standardization
Provided by IHS under license with ISO
No reproduction or networking permitted without license from IHS
Not for Resale

2.497541e-003, 5.063276e-003, 8.125824e-003, 9.016420e-003, 9.003903e-003, 3.727046e-003, -2.873730e-003, -7.890314e-003, -1.987658e-002, -3.144082e-002, -4.149298e-002, -3.335761e-002, -6.269828e-003, 6.056783e-003, -5.172207e-003, -6.453668e-003, -4.476885e-003, -1.862529e-002, -2.807893e-002, -6.874150e-003, -4.381936e-003, 2.689819e-003, -1.221037e-002, -1.542477e-002, -7.104468e-003, -5.610939e-003, -3.019487e-002, 9.752507e-003, 1.392290e-002, 9.953072e-003, 6.902281e-003, 1.399993e-002, 1.509701e-002, 5.556325e-003, -8.587598e-003, -2.184677e-002, -2.623467e-002, -1.424328e-002, -4.866636e-003, -3.035628e-003, -1.604745e-002, -9.854576e-003, -5.833387e-003, -8.674629e-003, -5.965955e-003, 5.956369e-003, 1.483075e-002, 2.053378e-002, 1.564059e-002, 1.129445e-002, 1.120811e-002, 6.956645e-003, 4.972496e-004, -9.047380e-004, -1.492687e-002, -2.760916e-002, -2.776153e-002, -1.491593e-002, 3.968078e-003, -2.570727e-003, -1.758308e-002, -1.858964e-002, -2.625775e-002, -3.678532e-002, -3.030576e-002, -1.560026e-002, -3.472861e-003, 1.609042e-002, -1.191051e-002, -1.821278e-002, -1.459111e-002, -1.191202e-002, -4.031675e-002, -7.767371e-004, 1.075975e-002, 9.780833e-003, 4.631470e-003, 1.001955e-002, 1.942822e-002, 1.641112e-002, -2.452018e-003, -1.058053e-002, -4.974647e-003, 1.379632e-002, 1.378353e-002, -6.049061e-003, -1.541457e-002, -3.372964e-003, 9.778805e-003, 1.034951e-002, 8.396165e-003, 1.948680e-002, 2.300548e-002, 2.157576e-002, 1.234252e-002, 9.608134e-004, -1.890164e-003, -2.027477e-004, -4.655511e-003, -7.316192e-003, -1.560384e-002, -1.707391e-002, -1.484191e-002, -7.744602e-004, 3.349860e-003, -1.484723e-002, -2.816070e-002, -2.914754e-002, -3.790630e-002, -2.989299e-002, -2.011031e-002, -2.356053e-002, 8.399453e-003, 1.970241e-002, -5.995773e-003, -2.811046e-003, 1.822124e-003, -2.425436e-004, -3.637492e-002, -4.378565e-003, 1.726236e-002, 1.269078e-002, 1.236990e-004, 2.276031e-003, 1.899239e-002, 1.786305e-002, 8.055314e-003, 1.265156e-002, 2.537686e-002, 4.004707e-002, 4.027234e-002, 1.135064e-002, -1.153363e-002, 6.943806e-003, 2.555009e-002, 2.707500e-002, 1.574324e-002, 1.701996e-002, 1.277297e-002, 9.434149e-003, 6.561689e-003, -1.235123e-004, -4.179941e-003, -5.479348e-003, -1.336608e-002, -1.769639e-002, -1.688519e-002, -1.143677e-002, 5.567347e-005, 8.664429e-003, 5.437139e-003, -1.069019e-002, -2.347219e-002, -2.756608e-002, -2.470065e-002, -6.862580e-004, -1.051929e-002, -3.239291e-002, 8.071308e-003, 1.390430e-002, -1.141954e-002, 1.841771e-003, 1.912381e-002, 1.406428e-002, -1.163105e-002, 1.139958e-002, 1.896804e-002, 9.172895e-003, 1.758435e-002, 3.745687e-003, 1.635043e-002, 1.072927e-002, 8.816583e-003, 2.236240e-002, 3.813544e-002, 4.554251e-002, 4.447759e-002, 2.200099e-002, -8.147936e-003, 1.116250e-002, 3.212781e-002, 2.872506e-002, 1.791862e-002, 1.447040e-002, 1.176546e-002, 7.726295e-003, 5.383113e-003, -7.237904e-004, -1.844660e-003, 1.593403e-003, 1.556784e-003, -5.102659e-003, -9.441481e-003, -3.803037e-003, 7.550094e-003, 8.692108e-003, 6.252748e-003, -2.849572e-003, -9.511735e-003, -1.014097e-002, 1.059905e-002, 3.645149e-002, -9.640790e-003, -4.226698e-002, -6.598991e-003, -7.958100e-003, -1.478219e-002, -7.509122e-003, 1.732114e-002, 2.179792e-002, -3.940588e-003, 2.245102e-002, 8.715901e-003, -4.867152e-003, 1.411371e-002, 1.307470e-003, 1.540852e-003, -3.635595e-003, 1.314662e-002, 2.907948e-002, 4.944743e-002, 3.602322e-002, 2.148068e-002, 2.271625e-002, -1.042625e-002, 4.448428e-003, 2.955194e-002, 2.904842e-002, 1.640778e-002, 1.463789e-002, 1.068640e-002, 9.651300e-003, 8.846003e-003, 8.376136e-003, 1.146025e-002, 1.113769e-002, 1.084413e-002, 3.979005e-003, 1.135911e-003, 6.591467e-003, 1.712450e-002, 1.322224e-002, 1.919643e-002, 1.446631e-002, 6.880920e-003, 1.197120e-002, 4.351306e-002, 5.255242e-002, -1.204618e-002, -3.004270e-002, -7.690563e-003, -1.748224e-002, -1.163664e-002, -1.021049e-002, 9.708495e-003, 2.540776e-002, -2.985731e-003, 2.140791e-002, -6.110408e-003, -1.558666e-002, 1.224452e-002, -2.712449e-003, -9.323904e-003, -1.227505e-002, 7.835385e-004, 1.753282e-002, 2.916080e-002, 5.089623e-004, -1.103530e-002, 1.516909e-002, -9.293307e-003, -1.311412e-002, 8.914114e-003, 1.635804e-002, 1.106608e-002, 6.174292e-003, 2.539618e-003, 3.424984e-003, 6.709506e-004, 8.869847e-004, 3.382838e-003, 8.538129e-005, -3.469370e-003, -9.063772e-003, -5.456238e-003, 5.325793e-003, 1.951307e-002, 2.579518e-002, 3.441076e-002, 2.693844e-002, 9.146877e-003, 1.044463e-002, 3.714532e-002, 3.925199e-002, -1.529369e-003, -1.319236e-003, 5.568391e-003, -2.321111e-003, 3.649815e-004, -7.674753e-003, 1.801943e-003, 1.278250e-002, -1.642469e-002, 1.247855e-002, -1.994165e-002, -1.787657e-002, 1.130338e-002, -1.162355e-002, -2.078291e-002, -1.890025e-002, 1.663316e-004, 3.125102e-003, -1.155080e-002, -3.688654e-002, -3.667558e-002, 5.002687e-003, -2.569460e-003, -2.259485e-002, -9.296219e-003, -1.029886e-002, -5.881429e-003, -6.674068e-003, -6.013978e-003, -3.854114e-003, -6.109669e-003, -9.115669e-003, -1.252844e-002, -1.932458e-002, -2.306918e-002, -2.446078e-002, -2.067594e-002, -1.212111e-002, 6.197075e-003, 2.793672e-002, 3.170102e-002, 1.514001e-002, -5.698934e-003, -1.714527e-002, -3.640522e-003, 1.563448e-002, 7.276492e-003, 2.188312e-002, 1.602202e-002, 1.825439e-002, 2.770390e-002, 8.032377e-003, 1.851269e-003, 3.766641e-003, -2.990793e-002, -1.400765e-002, -1.703584e-002, -1.901523e-002, 6.647911e-003, -1.083365e-002, -3.859776e-003, 5.176916e-003, 5.651931e-003, -1.619135e-002, -2.537940e-002, -2.488310e-002, -2.357943e-002, 2.483720e-002, 1.839008e-002, -1.168244e-002, -3.100408e-003, -1.389368e-002, -1.002185e-002, -2.596669e-003, 2.595051e-003, 1.045879e-002, 1.547637e-002, 1.127426e-002, 3.838259e-003, -5.816327e-003, -1.692766e-002, -2.019025e-002, -2.359576e-002, -1.316944e-002, 4.713896e-003, 1.859246e-002, 2.432549e-002, 1.407956e-002, -5.589403e-003, -2.617291e-002, -

© ISO/IEC 2004 — All rights reserved


Copyright International Organization for Standardization
Provided by IHS under license with ISO
No reproduction or networking permitted without license from IHS
Not for Resale

2.719577e-002, -1.246942e-002, 9.740236e-003, 2.884841e-002, 6.966522e-003, 1.434192e-002, 2.688746e-002, 2.227184e-002, 2.097489e-002, 1.950869e-002, -2.317012e-002, -2.949150e-002, -1.928173e-002, -1.622965e-002, 1.447399e-002, 2.084206e-003, 8.477147e-003, 6.641373e-003, -8.576057e-003, -1.788701e-002, -1.303143e-002, 1.695966e-004, -1.010893e-002, 1.395766e-002, 1.211569e-002, -7.134947e-003, -1.030173e-002, -6.223258e-003, -1.168569e-002, -1.310739e-002, -6.056274e-003, 7.531481e-003, 2.215816e-002, 2.364138e-002, 1.249374e-002, 5.926574e-003, -3.886575e-003, -1.231539e-002, -1.512679e-002, -1.068539e-002, -4.645598e-003, 6.028168e-003, 1.102036e-002, 7.740007e-003, -2.312967e-004, -1.213266e-002, -2.470694e-002, -2.885325e-002, -4.621329e-003, 1.804751e-003, -2.423342e-002, -2.819819e-002, -2.109409e-002, -1.480910e-002, 6.755907e-004, 2.151711e-002, -7.706229e-003, -1.027479e-002, -1.091647e-002, -9.816786e-003, -1.934573e-002, 1.051062e-002, 1.789276e-002, 1.610874e-002, 2.657475e-003, -1.871112e-003, 7.489904e-003, 2.032050e-002, 6.026558e-004, -6.432806e-003, -3.667155e-003, -4.914171e-003, 3.048450e-003, 1.258523e-002, 7.997799e-003, -1.932979e-003, -5.008061e-003, -4.143856e-003, 2.894612e-003, 8.468193e-003, 7.364447e-003, 6.427126e-003, 5.338220e-004, -7.460811e-003, -1.237314e-002, -8.255680e-003, -5.186155e-003, -4.517227e-004, -9.655748e-004, -1.420938e-004, 5.313524e-003, 7.765546e-003, -1.255434e-002, -1.602317e-002, -4.793190e-003, -4.131361e-003, -1.722923e-002, -1.811260e-002, -2.335075e-002, -3.529704e-002, -8.870615e-003, -5.349627e-003, -2.187767e-003, -3.443412e-003, 1.271430e-002, -3.315910e-003, -2.413971e-002, 8.577742e-003, 2.032607e-002, 2.334093e-002, 4.866952e-003, -5.683331e-003, -6.788053e-003, 5.494358e-003, -2.779087e-003, -1.504289e-002, -2.088140e-002, -1.707903e-002, 3.927269e-003, 1.490432e-002, 1.312607e-002, 5.258315e-003, -2.010847e-004, -8.121637e-003, -6.631373e-003, -4.192411e-003, -3.205475e-004, 1.094344e-004, -1.038607e-003, -1.259397e-003, -1.784574e-003, -1.854510e-004, 1.789664e-004, -1.921166e-003, -1.016104e-002, -2.640901e-003, 1.629780e-002, 1.025322e-002, -5.877827e-003, -2.418763e-003, -8.558097e-004, -1.080264e-002, -2.827734e-004, 1.343994e-002, -2.608208e-003, -1.278888e-002, -3.688873e-003, 2.805657e-003, 1.142030e-002, 6.719110e-003, 1.039492e-002, -6.849085e-003, -2.301571e-002, 5.978050e-003, 9.067714e-003, 2.864868e-003, 3.757701e-003, -1.452313e-002, -1.751734e-002, 8.205627e-003, 5.637909e-003, -7.985468e-004, -4.392431e-003, -1.810999e-002, 3.117249e-004, 1.450445e-002, 1.776737e-002, 1.722630e-002, 1.186245e-002, 3.002535e-003, -4.005029e-003, -1.230355e-002, -1.041520e-002, -7.374882e-003, -4.393965e-003, -2.154234e-003, 7.040492e-003, 1.190804e-002, 1.154144e-002, 2.879977e-003, -1.146693e-002, 4.016724e-003, 1.905946e-002, 8.487381e-003, -5.059503e-003, 8.516513e-003, -4.102931e-003, -1.231322e-002, 1.180854e-002, 4.592574e-002, 2.957274e-002, 5.466667e-003, 2.121437e-003, 1.288727e-003, 1.263795e-002, 1.817509e-002, 2.068773e-002, 8.019507e-003, -1.879689e-002, -2.611952e-002, -1.307215e-002, 3.256257e-003, 9.259532e-003, -9.589047e-005, -2.989083e-003, 1.499763e-002, 6.385169e-003, 7.592085e-003, 2.146088e-002, 7.532058e-003, 7.854090e-003, 1.452049e-002, 1.942402e-002, 2.181787e-002, 1.270476e-002, 1.427371e-003, -9.066786e-003, -2.130725e-002, -1.941677e-002, -1.694222e-002, -8.752664e-003, 1.042407e-003, 1.336153e-002, 1.895807e-002, 1.024080e-002, -2.074207e-003, -8.964002e-003, 8.698632e-003, 8.435238e-003, -1.218080e-002, -1.209381e-002, -3.495515e-003, -1.098433e-002, -5.288678e-003, 9.801321e-003, 3.209657e-002, 2.054383e-002, -7.750582e-004, -1.344534e-002, -2.037124e-002, -2.296178e-003, 2.205555e-002, 3.523541e-002, 1.795895e-002, -5.681575e-003, -1.483684e-002, -9.587616e-003, 5.727877e-003, 1.272461e-002, 2.190927e-003, -1.339045e-002, -1.270672e-002, -1.408865e-002, -9.968898e-003, 1.709307e-002, 9.543583e-003, 6.189796e-003, 4.425837e-003, 7.489259e-003, 8.988221e-003, 4.245691e-003, -3.895020e-003, -1.284701e-002, -1.630248e-002, -1.908723e-002, -1.632505e-002, -1.349288e-002, -9.729042e-003, -3.557490e-003, -1.874449e-004, -3.801580e-003, -4.284249e-003, 6.717309e-003, 1.517690e-002, -1.916864e-003, -4.935062e-003, 1.059014e-002, 1.606360e-002, 4.197935e-003, 1.030502e-002, 2.399704e-002, 2.295614e-002, 3.000325e-003, -2.622077e-002, -3.068856e-002, -1.688458e-002, 2.889162e-003, 2.926068e-002},
{-2.869435e-002, -2.494071e-002, -3.951779e-002, -2.242959e-002, -5.098782e-003, 1.219385e-002, 1.756661e-002, 1.993699e-002, 3.939154e-003, -1.021648e-002, -1.970432e-002, -1.465341e-002, 8.160884e-004, 5.837266e-003, 8.549631e-003, 3.943034e-003, 2.305977e-003, 5.286739e-003, 9.042559e-003, 1.642410e-002, 2.375015e-002, 2.054288e-002, 1.332492e-002, 3.236645e-003, -2.514062e-003, -8.896049e-003, -1.497531e-002, -1.711337e-002, -1.642544e-002, -5.218216e-003, 1.137152e-002, 2.400209e-002, 2.506355e-002, 1.590339e-002, 6.312655e-003, -4.184207e-003, -1.528124e-002, -9.505702e-003, 1.848164e-002, 1.587174e-002, -1.267450e-002, -1.360730e-002, -8.948688e-003, 9.940714e-004, -2.570725e-002, -4.139782e-002, 8.439402e-004, 6.431004e-003, -4.046085e-003, 7.212487e-003, 2.298940e-002, 2.969818e-002, 2.275325e-002, 1.603192e-002, 5.336748e-003, -1.849604e-002, -2.837012e-002, -1.204133e-002, 1.872560e-003, 3.221427e-003, -4.959396e-003, -1.966700e-002, -1.341062e-002, -2.797530e-004, 1.451326e-002, 2.415904e-002, 2.742987e-002, 2.299345e-002, 1.210244e-002, 3.347222e-003, -1.243376e-004, -1.898729e-003, -4.087270e-003, -7.692830e-003, -1.339925e-002, -1.346210e-002, -4.666657e-003, 4.128648e-003, 1.389880e-002, 1.155354e-002, 2.859517e-003, 6.152595e-005, -4.728524e-003, -9.937417e-003, 3.309215e-003, 2.835376e-002, 8.887873e-003, -6.956536e-003, 3.075027e-003, 9.186669e-003, 6.872126e-003, -2.301075e-002, 7.926654e-003, 2.109219e-002, 4.421957e-003, 4.654547e-003,


© ISO/IEC 2004 — All rights reserved

Copyright International Organization for Standardization
Provided by IHS under license with ISO
No reproduction or networking permitted without license from IHS
Not for Resale

1.708772e-002, 2.090672e-002, 1.503513e-002, 1.652003e-002, 2.438987e-003, -2.684154e-002, -2.668624e-002, -9.213582e-003, -8.151478e-003, -2.066699e-002, -3.138228e-002, -2.864795e-002, -2.051307e-002, -9.717762e-003, 2.565224e-006, 7.929400e-003, 8.370182e-003, 3.727410e-003, -2.265927e-003, -8.654126e-004, -1.918479e-003, 8.508710e-004, 1.509958e-003, 2.839461e-003, 3.060869e-003, 9.417541e-004, -2.883859e-003, -5.307612e-004, 5.970000e-003, 8.114308e-003, 3.178038e-003, -1.299560e-002, -4.567211e-003, -4.629920e-004, -2.236441e-003, 1.366341e-002, 2.467035e-002, -1.688359e-003, -7.927091e-003, 1.422064e-002, 3.036221e-002, -2.570621e-003, 1.610070e-002, 3.070668e-002, -4.435980e-003, -3.324867e-003, 3.829082e-003, 5.262602e-003, 8.899020e-003, 2.260524e-002, -6.076546e-005, -1.555357e-002, -7.952566e-003, -6.576558e-003, -1.579274e-002, -2.723347e-002, -2.725275e-002, -2.274827e-002, -2.254388e-002, -2.329234e-002, -2.169976e-002, -1.272931e-002, -3.146417e-003, -3.306703e-004, 1.082566e-003, 6.799386e-003, 5.501440e-003, 7.717697e-003, 1.122495e-002, 1.197715e-002, 1.089907e-002, 1.528480e-002, 2.083003e-002, 1.823690e-002, 1.896643e-002, 2.084972e-002, 1.646602e-002, -1.242003e-002, -2.102944e-002, 2.459614e-003, 1.927668e-002, 1.225596e-002, 2.261542e-002, 6.213542e-003, -1.173424e-002, -7.391295e-005, 3.301720e-002, 1.227462e-002, 7.297429e-003, 7.202181e-003, -3.388800e-002, -2.911995e-002, -1.695164e-002, -1.981633e-002, 7.269323e-003, 1.273329e-002, -8.793423e-003, -1.234389e-002, -4.126208e-003, -6.183914e-003, -1.662135e-002, -2.166568e-002, -2.550489e-002, -2.963054e-002, -3.221243e-002, -3.407736e-002, -2.958914e-002, -1.942033e-002, -7.893729e-003, 4.766784e-004, 5.049896e-003, 8.014429e-003, 7.601846e-003, 9.833177e-003, 9.964121e-003, 8.875467e-003, 7.543703e-003, 1.225329e-002, 2.957927e-002, 3.720613e-002, 3.587302e-002, 3.061308e-002, 2.914658e-002, 1.419212e-002, -1.683792e-002, -1.345737e-002, 2.673958e-002, 3.062445e-002, 2.087852e-002, 1.644322e-002, -1.015001e-002, -2.023669e-002, 2.090703e-002, 1.561361e-002, 8.759290e-003, 3.682857e-003, -3.136767e-002, -2.108361e-002, -2.419186e-002, -2.344338e-002, 1.326043e-002, 4.705635e-003, -5.873299e-003, -5.238742e-003, 4.676634e-003, 6.866514e-003, -3.179497e-003, -1.581232e-002, -2.496169e-002, -3.050008e-002, -3.227727e-002, -3.666859e-002, -4.116565e-002, -3.724281e-002, -2.959419e-002, -2.123771e-002, -1.532907e-002, -1.188724e-002, -8.246225e-003, -7.760934e-003, -1.174820e-002, -1.248121e-002, -5.205725e-003, 4.823035e-003, 1.670487e-002, 2.733369e-002, 3.228150e-002, 1.959041e-002, 9.568369e-003, 1.051939e-002, -3.436967e-003, -2.391233e-002, 2.568958e-003, 2.328505e-002, 1.453326e-002, 6.264802e-003, -6.401948e-003, -2.297775e-002, 1.158403e-002, 1.407192e-002, 1.419988e-002, 9.363365e-003, -1.478173e-002, -6.789595e-003, -2.621353e-002, -7.179935e-003, 1.627831e-002, 8.985191e-003, -1.270985e-003, 2.139699e-003, 1.724363e-002, 1.274946e-002, -4.590126e-003, -8.554758e-003, -7.587075e-003, -1.074619e-002, -2.308388e-002, -3.487933e-002, -4.375999e-002, -4.235185e-002, -3.312927e-002, -2.149143e-002, -1.120149e-002, -7.430782e-003, -5.267335e-003, -1.101608e-002, -2.346459e-002, -3.037528e-002, -2.447439e-002, -1.277003e-002, 6.880973e-003, 2.362760e-002, 2.591013e-002, 1.419198e-002, -5.931815e-003, -1.195699e-002, -1.235935e-002, -1.791324e-002, -1.262674e-002, 1.879732e-002, 1.592522e-002, -7.942076e-003, -8.986917e-003, -2.092781e-002, 2.567174e-003, 3.245069e-003, 2.175749e-002, 1.533359e-002, -6.240796e-003, -4.036179e-003, -1.806990e-002, -1.268836e-003, 2.623623e-002, 1.335529e-002, -1.291237e-003, 1.589908e-002, 2.449542e-002, 1.049913e-002, 7.091138e-003, 1.373405e-002, 2.135028e-002, 1.310968e-002, -5.176771e-003, -2.299411e-002, -2.766150e-002, -2.059963e-002, -4.412421e-003, 1.567902e-002, 3.242637e-002, 4.011598e-002, 3.511783e-002, 1.785694e-002, -5.524101e-003, -2.411190e-002, -3.000372e-002, -2.317562e-002, -8.457354e-003, 1.338629e-002, 2.524359e-002, 1.137568e-002, -1.350302e-002, -2.571801e-002, -2.212887e-002, -1.527690e-002, -9.169196e-003, 8.377218e-003, 1.708498e-002, -1.639146e-002, -1.608736e-002, -1.612388e-002, 3.985975e-003, -2.794294e-003, 2.488407e-002, 2.110251e-002, -1.172750e-003, 2.382262e-003, -1.685989e-002, 4.429611e-003, 3.888053e-002, 1.283068e-002, 4.613892e-003, 2.011281e-002, 1.747146e-002, 1.462951e-002, 2.844005e-002, 4.018021e-002, 4.251508e-002, 2.869734e-002, 7.792505e-003, -7.207315e-003, -9.463503e-003, 6.200017e-004, 2.237454e-002, 5.388627e-002, 7.219985e-002, 7.932439e-002, 6.509087e-002, 3.811471e-002, 1.030505e-002, -1.600481e-002, -2.785967e-002, -2.732490e-002, -1.499449e-002, 2.446108e-003, 1.719121e-002, 1.398216e-002, -1.488792e-002, -3.297413e-002, -3.390926e-002, -2.159165e-002, -1.003551e-002, 3.971701e-003, 9.150471e-003, -1.257428e-002, -2.717889e-002, -1.037758e-002, 6.573500e-003, 3.303988e-003, 2.322322e-002, 1.957159e-002, 9.983903e-003, 2.225857e-003, -2.127670e-002, 1.660417e-002, 3.862724e-002, 1.085327e-002, 1.337810e-002, 3.158162e-002, 2.277804e-002, 2.237074e-002, 4.421888e-002, 5.422729e-002, 5.469880e-002, 3.320964e-002, 5.399874e-003, -1.521216e-002, -2.165556e-002, -7.913540e-003, 2.178299e-002, 5.441426e-002, 7.758819e-002, 8.298239e-002, 6.694385e-002, 3.233104e-002, 1.088642e-003, -2.109628e-002, -3.562854e-002, -3.622774e-002, -2.372383e-002, -4.561643e-003, 1.056772e-002, 1.491427e-002, -3.599703e-003, -2.610064e-002, -3.362478e-002, -2.372964e-002, -9.015359e-003, 7.924598e-004, -2.360538e-003, -1.823810e-002, -3.308125e-002, -1.147943e-002, 2.277149e-003, 3.687841e-003, 1.626629e-002, -3.654871e-004, 1.943296e-002, -3.299493e-003, -1.709802e-002, 2.020164e-002, 2.828850e-002, 9.657595e-003, 2.220027e-002, 3.115750e-002, 1.746590e-002, 2.053621e-002, 4.379338e-002, 5.626194e-002, 5.601186e-002, 2.714888e-002, -1.322012e-002, -4.308732e-002, -5.268323e-002, -3.518422e-002, -

© ISO/IEC 2004 — All rights reserved


Copyright International Organization for Standardization
Provided by IHS under license with ISO
No reproduction or networking permitted without license from IHS
Not for Resale

1.395257e-003, 2.713076e-002, 5.203984e-002, 6.176140e-002, 4.507963e-002, 1.316265e-002, -2.101190e-002, -3.998120e-002, -4.965012e-002, -4.796120e-002, -3.861235e-002, -1.293339e-002, 1.073643e-002, 2.049004e-002, 1.120871e-002, -8.397479e-003, -1.672959e-002, -1.872554e-002, -4.369417e-003, 7.072682e-003, -1.032587e-002, -2.713467e-002, -3.318809e-002, -1.597775e-002, 4.683915e-003, -6.437730e-004, 9.638619e-003, 2.501815e-003, 2.003924e-002, -3.349140e-003, -1.367364e-002, 1.774580e-002, 1.402035e-002, 5.160485e-003, 2.016181e-002, 1.874842e-002, -4.011535e-004, 5.728560e-003, 3.835301e-002, 6.341161e-002, 4.925751e-002, 1.488264e-002, -2.961139e-002, -6.249874e-002, -6.907040e-002, -5.068069e-002, -2.521136e-002, -1.308669e-003, 2.656121e-002, 3.836304e-002, 2.576668e-002, -1.951941e-003, -3.195632e-002, -4.705671e-002, -5.663999e-002, -5.698355e-002, -4.638346e-002, -1.894768e-002, 5.872707e-003, 2.210007e-002, 1.647203e-002, 5.623758e-003, 1.429596e-003, -4.181061e-003, 1.999456e-003, 8.066737e-003, -8.071531e-003, -2.453601e-002, -3.086437e-002, -1.620548e-002, 6.026356e-003, -4.097643e-003, 1.473650e-003, 5.426210e-003, 1.370471e-002, -4.712683e-003, -9.528647e-003, 4.933832e-003, 4.445101e-005, -2.456801e-003, 6.932105e-003, -6.658466e-003, -2.417712e-002, 4.238436e-003, 4.756589e-002, 6.406107e-002, 4.092902e-002, 5.709194e-004, -3.634117e-002, -6.259622e-002, -6.830248e-002, -5.218288e-002, -3.207107e-002, -1.017651e-002, 1.526190e-002, 2.889263e-002, 1.785258e-002, -4.060600e-003, -2.678168e-002, -4.544441e-002, -5.561823e-002, -5.737347e-002, -4.715373e-002, -2.181889e-002, 7.947321e-003, 2.233459e-002, 1.638170e-002, 5.682462e-003, 4.566886e-003, 8.413476e-003, 8.485863e-003, 1.317692e-002, -1.636411e-003, -2.792396e-002, -2.019804e-002, -2.832972e-003, 1.287835e-002, -3.803259e-003, -1.015116e-003, 6.684397e-003, 9.851364e-003, -7.088530e-003, -1.151662e-002, -2.356327e-003, -6.331764e-003, -7.788389e-003, -4.680324e-003, -2.817229e-002, -3.533064e-002, 1.158782e-002, 5.608909e-002, 5.378635e-002, 2.336090e-002, -8.913160e-003, -3.739411e-002, -5.927912e-002, -6.311443e-002, -5.240361e-002, -2.866577e-002, -6.298135e-003, 1.684353e-002, 3.157923e-002, 2.154702e-002, 4.218824e-003, -7.186866e-003, -2.996702e-002, -4.248542e-002, -4.045973e-002, -3.174558e-002, -1.426944e-002, 9.630193e-003, 2.544789e-002, 1.666770e-002, 6.696034e-003, 3.390957e-003, 9.322152e-003, 9.409802e-003, 1.485964e-002, 3.614513e-003, -1.961455e-002, -2.141057e-003, 9.311253e-003, 1.503356e-002, 1.295712e-004, -7.082684e-003, 9.247521e-003, 1.271368e-002, -1.103808e-002, -1.101444e-002, -2.477143e-003, -1.123787e-002, -1.188738e-002, -1.400393e-002, -3.707020e-002, -3.066483e-002, 1.848627e-002, 4.545324e-002, 3.255830e-002, 7.991688e-003, -1.654315e-002, -3.641011e-002, -4.374970e-002, -4.312482e-002, -3.675830e-002, -1.588467e-002, 5.211471e-003, 2.117241e-002, 3.245876e-002, 2.726069e-002, 1.690914e-002, 1.364268e-002, -3.184486e-003, -1.531607e-002, -1.632469e-002, -1.072514e-002, -4.772321e-003, 1.144329e-002, 2.620172e-002, 2.433048e-002, 1.307821e-002, 5.964912e-003, 1.512976e-002, 9.470396e-003, 1.077725e-002, -5.898854e-003, -1.617627e-002, 1.880803e-002, 8.920383e-003, 1.041280e-002, -1.004678e-003, -7.965444e-003, 1.399170e-002, 1.433579e-002, -8.725900e-003, -1.120834e-002, 5.374070e-004, -1.050108e-002, -1.006012e-002, -1.536319e-002, -3.610820e-002, -2.702591e-002, 1.019443e-002, 2.742815e-002, 1.282680e-002, -5.868247e-003, -1.452584e-002, -1.994996e-002, -2.248506e-002, -2.035969e-002, -1.579231e-002, -1.193048e-003, 1.206027e-002, 2.046293e-002, 2.906096e-002, 2.990669e-002, 1.993939e-002, 2.149747e-002, 1.818118e-002, 1.170854e-002, 1.013593e-002, 9.152560e-003, 1.159161e-002, 1.851554e-002, 3.149099e-002, 3.111557e-002, 1.619664e-002, 7.310797e-003, 1.855406e-002, 1.230130e-002, 7.477681e-003, -1.583354e-002, -1.726360e-002, 3.220772e-002, 1.400577e-002, 5.596609e-003, -5.341641e-003, -1.425125e-002, 7.110150e-003, -8.236508e-004, -4.715489e-004, -8.956652e-003, 3.260184e-003, -1.116273e-002, -1.056725e-002, -1.426265e-002, -2.437977e-002, -2.490942e-002, -5.067875e-003, 2.888147e-003, -4.402697e-003, -9.542262e-003, -1.597679e-003, 3.898420e-003, -2.366411e-003, -4.343872e-003, -4.053796e-003, 8.067483e-004, 8.514788e-003, 1.481100e-002, 1.936277e-002, 2.211510e-002, 1.853244e-002, 1.725126e-002, 2.162384e-002, 2.502391e-002, 1.987602e-002, 1.090566e-002, 7.870381e-004, 3.085760e-003, 1.660903e-002, 2.122841e-002, 1.306519e-002, 1.453413e-004, 9.456308e-003, 1.177259e-002, 8.432118e-003, -2.073267e-002, -1.358858e-002, 4.107348e-002, 1.304034e-002, 2.503493e-003, -7.546295e-003, -1.781567e-002, -7.018886e-003, -1.742787e-002, -2.743911e-003, -1.001615e-002, 3.260414e-003, -1.150082e-002, -1.014841e-002, -9.004621e-003, -1.181852e-002, -3.032990e-002, -3.530739e-002, -2.815860e-002, -1.034258e-002, 1.441485e-002, 4.067955e-002, 4.876531e-002, 3.068442e-002, 8.591577e-003, -6.271646e-003, -9.985338e-003, -2.880467e-003, 6.444217e-003, 6.800196e-003, 7.899901e-003, 7.585809e-003, 9.371862e-003, 2.196201e-002, 3.317661e-002, 3.216739e-002, 1.307824e-002, -1.274889e-002, -2.935706e-002, -3.095766e-002, -1.850952e-002, -5.594015e-003, -6.289362e-003, -2.584485e-003, 6.414968e-003, 1.497418e-002, -1.392910e-002, -6.102402e-003, 4.105731e-002, 9.827429e-003, 4.954960e-004, 5.597951e-003, -2.070342e-002, -1.929873e-002, -2.692945e-002, -5.765551e-003, -1.446567e-002, 1.021221e-003, -1.159423e-002, -1.025958e-002, 6.138444e-003, -2.536723e-003, -3.454573e-002, -5.615116e-002, -4.878841e-002, -1.938065e-002, 2.072663e-002, 4.976639e-002, 5.471345e-002, 3.776089e-002, 1.252922e-002, -1.043231e-002, -2.315594e-002, -1.853827e-002, -5.844193e-003, -3.932585e-003, -8.813906e-003, -1.230586e-002, -5.109115e-003, 8.952549e-003, 1.884469e-002, 3.324829e-002, 3.022925e-002, 3.758093e-003, -1.857112e-002, -3.344889e-002, -3.735397e-002, -2.779900e-002, -


© ISO/IEC 2004 — All rights reserved
--`,,```,,,,````-`-`,,`,,`,`,,`---

Copyright International Organization for Standardization
Provided by IHS under license with ISO
No reproduction or networking permitted without license from IHS
Not for Resale

1.596571e-002, -1.474119e-002, -4.740805e-003, 1.616064e-002, -7.998608e-004, 2.333426e-003, 2.865677e-002, -4.926455e-003, -3.856030e-003, 1.258776e-002, -2.698843e-002, -2.391393e-002, -3.068366e-002, -9.170292e-003, -1.224036e-002, 5.728624e-003, -9.866391e-003, -4.488726e-003, 1.745823e-002, 9.312495e-003, -9.008245e-003, -2.840077e-002, -3.194091e-002, -2.754760e-002, -9.022346e-003, 7.827256e-003, 1.379946e-002, 3.325068e-003, -1.247499e-002, -2.942759e-002, -4.234475e-002, -3.504018e-002, -1.532961e-002, -1.567932e-002, -2.853565e-002, -3.813224e-002, -3.236953e-002, -1.540571e-002, 7.789519e-003, 3.435558e-002, 4.255295e-002, 3.004309e-002, 1.258410e-002, 1.034907e-002, 1.110087e-002, 1.431999e-003, -1.325014e-002, -2.548040e-002, -1.974014e-002, 8.009119e-003, 3.827513e-003, 1.201729e-003, 1.040298e-002, -2.747258e-002, -4.887571e-003, 1.498001e-002, -2.128277e-002, -9.628154e-003, -2.514500e-002, -3.382344e-003, -1.263991e-003, 9.296950e-003, -2.212224e-003, 2.796967e-003, 1.965884e-002, 3.604491e-002, 2.273647e-002, -9.588040e-003, -2.119002e-002, -2.301932e-002, -4.576434e-003, 2.498977e-002, 4.160824e-002, 4.752638e-002, 3.946340e-002, 1.078454e-002, -1.565052e-002, -8.876292e-003, 1.952057e-002, 1.707404e-002, -4.658298e-003, -2.864715e-002, -2.848639e-002, 5.328066e-003, 3.031967e-002, 3.079483e-002, 3.443876e-003, -2.362205e-002, -4.042012e-002, -2.981891e-002, 1.042586e-002, 4.742654e-002, 3.904838e-002, -1.447229e-002, -3.092999e-002, 1.466571e-003, 1.249928e-002, 4.829899e-003, -7.893806e-003, -4.132298e-002, -1.097289e-002, 1.412573e-002, -2.070268e-002, -3.784522e-005, -8.418100e-003, 8.422753e-003, 1.096432e-002, 9.334088e-003, 5.823600e-003, 1.563325e-003, 1.998992e-002, 4.166476e-002, -5.631551e-003, -5.438663e-002, -5.964482e-002, -5.626932e-002, -4.203082e-002, -2.546814e-002, -1.251721e-002, 3.647581e-003, 2.219838e-002, 3.368892e-002, 1.288368e-002, 2.494872e-002, 5.497555e-002, 5.204911e-002, 2.560943e-002, -4.541823e-003, -1.653019e-002, 8.281994e-003, 2.003293e-002, 8.191041e-003, -1.849901e-002, -4.816325e-002, -6.306709e-002, -6.060936e-002, -3.134793e-002, 1.797272e-002, 5.784607e-002, 1.197637e-002, -3.363942e-002, -2.238088e-003, 2.648697e-002, 2.631639e-003, -1.679541e-002, -4.283736e-002, -1.014197e-002, 2.150830e-002, -1.577640e-002, 7.174000e-003, -3.211013e-004, 8.573609e-003, 8.982008e-003, 2.113885e-003, 5.761909e-003, -1.364991e-003, 8.877247e-003, 2.214139e-002, -1.960358e-002, -3.726817e-002, -1.219375e-002, 6.550315e-003, 1.484710e-002, 1.219738e-002, -6.428474e-003, -1.422113e-002, -4.538067e-003, 4.786121e-003, 8.497534e-003, 2.417089e-002, 5.897874e-002, 5.527349e-002, 2.772220e-002, -2.297506e-003, -1.889625e-002, -8.288576e-004, 2.084518e-002, 2.860944e-002, 3.440224e-002, 2.393107e-002, 8.712987e-003, 7.699303e-004, -4.487381e-003, 4.013570e-003, 3.482934e-002, 3.271309e-002, -1.600661e-002, -5.468446e-003, 2.672304e-002, 8.094133e-003, -1.982392e-003, -2.134912e-002, 1.540793e-003, 2.244896e-002, -1.536528e-002, 9.737559e-003, 7.736263e-004, 1.219250e-002, 2.851778e-005, -2.073559e-002, -5.323031e-003, -1.770469e-002, -1.127715e-002, 2.469191e-002, 1.863835e-002, 2.462750e-002, 5.156896e-002, 3.321732e-002, 2.665075e-002, 1.280415e-002, 3.353989e-003, -2.557810e-003, 5.975991e-003, -1.167551e-002, -3.098581e-002, 2.253263e-003, 4.321827e-002, 4.571810e-002, 1.580836e-002, -2.584415e-002, -4.468490e-002, -2.635986e-002, -2.033840e-002, -1.456497e-002, -2.770782e-003, -4.395691e-003, -2.975911e-003, 2.850712e-002, 2.612929e-002, 8.291001e-003, 1.552820e-002, 2.960788e-002, 2.166895e-003, 2.144820e-003, 1.535449e-002, 7.730215e-003, 7.606845e-003, -3.499073e-003, 1.114990e-002, 2.616395e-002, 7.759354e-003, 7.047589e-003, -8.579486e-003, 3.499536e-003, -1.995091e-002, -3.305713e-002, 7.385277e-004, -3.536749e-002, -3.399880e-002, 1.498884e-002, 3.414690e-002, 4.906200e-002, 2.807054e-002, -1.155556e-002, 1.232164e-002, 4.746598e-002, 2.098856e-002, -1.437676e-002, 8.262066e-003, -2.011719e-002, -5.453071e-002, -1.084676e-002, 3.810302e-002, 3.519080e-002, 1.692487e-002, -2.286792e-002, -5.041556e-002, -2.838609e-002, -3.522207e-002, -3.484379e-002, 1.509045e-002, 1.446166e-002, -1.253195e-002, -1.015332e-002, -7.683319e-003, -1.302010e-002, -1.983559e-002, -4.037500e-003, -8.946964e-003, -1.265824e-002, -1.398666e-002, -1.884076e-002, 2.698261e-003, -1.467640e-003, 4.098640e-003, 1.258456e-002, 9.060303e-003, 3.177255e-003, -8.752826e-003, -4.326890e-003, -2.864716e-002, -2.872207e-002, 1.386384e-002, -2.117323e-002, -2.025380e-002, 2.351795e-002, 1.593005e-002, 1.769777e-003, -4.916480e-003, 2.445945e-003, 1.405229e-002, 2.101057e-002, 1.862179e-002, 1.308552e-002, -7.389172e-003, -4.245456e-002, -6.730248e-002, -1.214137e-002, 2.316048e-002, 1.582057e-002, 3.686529e-003, -1.848131e-002, -3.545027e-002, -3.225695e-002, -2.344280e-002, -1.021297e-002, 9.187239e-003, 1.636599e-002, 4.612004e-003, 8.842568e-003, -1.679818e-002, -3.003902e-002, -2.465127e-002, -6.420309e-003, -3.230005e-003, -1.829226e-002, -2.344501e-002, -2.362926e-002, -9.480781e-004, -3.098640e-003, -1.942099e-002, -9.042869e-003, 1.262861e-003, -1.679688e-004, -2.650763e-003, 1.805776e-004, -3.091706e-002, -2.143077e-002, 2.606098e-002, -6.142007e-003, 1.432411e-003, 2.924414e-002, 1.922934e-002, -1.479157e-003, 3.367437e-003, 2.177253e-002, 3.412976e-002, 3.890174e-002, 3.545356e-002, 1.658884e-002, -1.917267e-002, -5.132615e-002, -4.314345e-002, -1.237032e-003, 6.823591e-003, 5.207537e-003, -3.688608e-003, -2.275576e-002, -1.717810e-002, -2.087712e-002, -1.282522e-002, 9.459191e-004, 8.925958e-003, 1.812554e-002, 2.397650e-002, 2.122952e-002, -9.852224e-004, -1.594087e-002, -1.379920e-002, 5.172760e-003, 2.099406e-002, 9.756331e-004, -1.482987e-002, -1.352347e-002, -9.499621e-005, -1.446298e-002, -3.589462e-002, -1.855823e-002, -6.575181e-003, 8.865424e-004, -8.846591e-004, 6.902921e-003, -1.147021e-002, -3.697838e-003,

© ISO/IEC 2004 — All rights reserved


Copyright International Organization for Standardization
Provided by IHS under license with ISO
No reproduction or networking permitted without license from IHS
Not for Resale

2.573386e-002, 2.735114e-005, 1.259637e-002, 3.739001e-002, 1.902120e-002, -2.937374e-003, -1.629914e-003, 1.565719e-002, 2.645001e-002, 2.488249e-002, 1.586317e-002, -6.952294e-003, -3.172470e-002, -3.672183e-002, -1.891881e-002, 1.714773e-003, -1.036542e-002, -6.028973e-003, 5.023088e-004, -1.280069e-002, -7.633707e-003, -8.330210e-003, -1.127053e-002, 4.378277e-003, 1.803370e-002, 2.316166e-002, 2.324901e-002, 1.979475e-002, 7.905141e-003, -3.356060e-003, 2.552139e-003, 1.401975e-002, 3.922369e-002, 1.186294e-002, -7.268082e-003, 4.390298e-003, 1.201621e-002, -1.344309e-002, -3.670866e-002, -1.608358e-002, -5.725371e-003, 1.302590e-003, -1.349170e-003, 6.781881e-003, 4.831183e-003, 8.290638e-003, 3.353042e-002, 9.393788e-004, 1.552760e-002, 4.140764e-002, 1.793437e-002, -7.991220e-003, -9.223013e-003, -2.068816e-003, 8.637913e-003, 7.023836e-003, -5.062415e-003, -2.213093e-002, -2.459524e-002, -1.318823e-002, 2.734177e-003, -7.928207e-003, -2.421053e-002, -1.633179e-002, -3.543065e-003, -3.535416e-003, 2.833085e-003, 5.891956e-003, -1.228934e-003, -1.173570e-003, 1.064582e-002, 1.895707e-002, 1.759056e-002, 1.961157e-002, 1.121077e-002, 8.291412e-003, 5.627269e-003, 1.588625e-002, 4.011677e-002, 1.828543e-002, -4.532519e-003, 1.615295e-002, 2.551355e-002, -6.359830e-003, -2.612783e-002, 1.027330e-002, -3.795009e-003, 5.596601e-003, -5.355152e-003, 1.709443e-003, 1.025839e-002, 7.332454e-003, 2.853012e-002, 3.586440e-003, 1.262395e-002, 3.242387e-002, 2.466368e-002, 2.390174e-003, -1.405055e-002, -1.216864e-002, -1.581132e-002, -1.929778e-002, -2.488053e-002, -2.601615e-002, -1.034699e-002, 1.468856e-002, 1.281462e-002, -2.045627e-002, -3.186274e-002, -2.467438e-002, -1.435257e-002, 1.143061e-003, 7.928325e-003, 1.348441e-002, -9.314160e-004, -3.836437e-003, -1.495266e-003, 4.712717e-003, 9.361700e-003, 1.172742e-002, 8.669704e-003, 7.931690e-003, 1.482131e-003, 1.097829e-002, 3.691774e-002, 2.152582e-002, -3.621289e-003, 1.626436e-002, 3.028647e-002, 2.026951e-004, -2.565565e-003, 2.316834e-002, 1.793746e-002, 1.383739e-002, 8.743612e-004, 3.075622e-003, 8.804801e-003, 5.359439e-003, 2.114209e-002, 8.404820e-003, 6.861172e-003, 2.211407e-002, 5.036369e-003, -3.397803e-003, -1.269841e-002, -1.641286e-002, -2.125834e-002, -2.524860e-002, -1.763489e-002, 6.993446e-004, 2.490235e-002, 2.388778e-002, -9.755371e-004, -2.558418e-002, -2.852175e-002, -1.533745e-002, -1.166099e-002, -4.831610e-003, 7.077623e-003, 2.434076e-002, 7.915938e-003, -6.341045e-003, -1.139933e-002, -8.469728e-003, -2.180249e-003, 3.587892e-003, 2.568554e-003, -3.767982e-003, -8.888672e-003, 4.383755e-003, 2.601613e-002, 1.375449e-002, 4.832277e-004, 1.451026e-002, 2.341570e-002, 8.693500e-003, 1.350252e-002, 3.889739e-002, 2.461579e-002, 2.044620e-002, 5.591311e-003, 1.026780e-002, 8.349211e-003, -3.130771e-003, 7.546575e-003, 1.321711e-002, 7.992508e-003, 1.209290e-002, -6.864457e-003, -1.755714e-002, -1.886107e-002, -1.254680e-002, -1.258526e-002, -7.101616e-003, 6.606596e-003, 2.693221e-002, 3.243690e-002, 1.846134e-002, 8.656657e-003, -1.321291e-002, -1.788181e-002, -4.692210e-003, 6.912868e-003, 4.362382e-003, 6.600398e-003, 2.273151e-002, 1.183656e-002, -4.596579e-003, -1.482802e-002, -1.449213e-002, -1.504556e-002, -1.411506e-002, -1.786368e-002, -2.056560e-002, -2.048966e-002, -4.236858e-003, 2.074489e-002, 3.660296e-003, 7.557873e-003, 1.590354e-002, 1.573228e-002, 1.196848e-002, 1.770810e-002, 6.007849e-002, 2.681009e-002, 2.064484e-002, 7.408309e-003, 1.152447e-002, 1.234014e-002, -7.170113e-004, -8.790773e-004, 1.096230e-002, 1.082884e-002, 7.664180e-003, -1.614041e-002, -2.763511e-002, -3.027977e-002, -1.960609e-002, -8.657218e-003, 1.468100e-003, 1.721144e-002, 2.913752e-002, 1.685258e-002, 1.624229e-003, -7.701916e-003, -2.794225e-002, -1.359056e-002, 6.469287e-003, 8.940357e-003, 7.727780e-003, -4.790218e-003, 1.687914e-002, 7.790515e-003, -7.574737e-003, -2.359522e-002, -3.391152e-002, -3.536736e-002, -3.160639e-002, -2.840693e-002, -2.674935e-002, -2.219538e-002, -8.811224e-003, 1.366107e-002, 6.026888e-003, 8.826781e-003, 3.584997e-003, 8.656397e-003, 7.683093e-003, 1.508994e-002, 4.934519e-002, 2.430196e-002, 1.817908e-002, 1.209364e-002, 1.023748e-002, 1.076058e-002, -1.264604e-002, -1.616470e-002, 8.546729e-003, 1.748544e-002, 2.871700e-003, -1.943332e-002, -3.055700e-002, -3.420865e-002, -2.385831e-002, -6.270646e-003, 9.726763e-003, 2.341781e-002, 1.974852e-002, -1.941935e-003, -1.201919e-002, -3.014501e-002, -3.153446e-002, 9.595746e-003, 2.936947e-002, 9.638935e-003, -8.515240e-003, -9.826255e-003, 7.488757e-003, 6.471143e-003, -4.855668e-003, -1.712137e-002, -2.292004e-002, -2.363881e-002, -2.180008e-002, -2.106421e-002, -2.132009e-002, -1.965887e-002, -7.537129e-003, 1.328936e-002, 1.497210e-002, 5.140921e-003, -2.781263e-003, -4.649381e-003, 1.645253e-003, 7.516458e-003, 3.041067e-002, 2.249258e-002, 1.210799e-002, 9.426098e-003, 9.448147e-003, 1.737711e-002, -1.049424e-002, -2.588225e-002, 1.869804e-003, 2.362167e-002, 1.146371e-002, -1.741812e-002, -2.403351e-002, -2.464252e-002, -1.291093e-002, 1.080973e-002, 3.142229e-002, 2.670569e-002, 4.761280e-003, -1.855042e-002, -1.757886e-002, -1.309576e-002, 2.376815e-002, 4.667661e-002, 3.327024e-002, 4.801387e-003, -1.687741e-002, -1.007721e-002, 7.787480e-004, 9.699464e-003, 3.921287e-003, -9.091226e-003, -8.158857e-003, -3.511824e-003, -3.576535e-003, -5.185598e-003, -1.157434e-002, -1.736812e-002, -4.959225e-003, 6.016204e-003, 1.252157e-002, -4.168417e-003, -6.770649e-003, -8.508441e-003, -1.600697e-003, -1.472275e-003, 1.230918e-002, 7.040683e-003, -9.994419e-004, -2.740010e-003, -5.400484e-003, 8.973523e-003, 1.842461e-003, -1.548768e-002, 1.246526e-003, 3.215759e-002, 2.246299e-002, -1.731122e-002, -2.128807e-002, -1.464685e-002, 9.586481e-004, 2.425397e-002, 3.586254e-002, 1.397740e-002, -1.829923e-002, -3.149049e-002, -2.795372e-002, -1.451606e-002, 6.161441e-003,


© ISO/IEC 2004 — All rights reserved

Copyright International Organization for Standardization
Provided by IHS under license with ISO
No reproduction or networking permitted without license from IHS
Not for Resale

9.741789e-003, -1.344411e-002, -3.882316e-002, -5.493213e-002, -4.261545e-002, -1.794697e-002, 1.783443e-003, 5.594830e-003, -3.892803e-003, 1.370031e-003, 9.997523e-003, 1.207736e-002, 6.174866e-003, -4.385850e-003, -1.455124e-002, -5.721227e-003, 1.328286e-003, 1.275490e-002, -8.031518e-003, -7.144720e-003, -7.268161e-003, -9.686108e-003, -1.058450e-002, -7.102616e-003, -5.084241e-003, -1.332134e-002, -1.387086e-002, -1.631665e-002, -3.531797e-003, 3.790039e-003, -2.537786e-002, -1.431534e-002, 3.202803e-002, 3.067767e-002, -1.659614e-002, -2.458571e-002, -9.397105e-003, 8.780423e-003, 2.784037e-002, 2.944890e-002, 1.094602e-003, -2.325406e-002, -2.927321e-002, -2.519509e-002, -1.275697e-002, -4.128227e-003, -1.228760e-002, -2.665826e-002, -3.879101e-002, -4.938853e-002, -3.955826e-002, -1.966287e-002, -6.565107e-003, -2.024341e-003, -2.679214e-004, 6.154645e-003, 1.699465e-002, 2.090495e-002, 1.341533e-002, -1.914668e-003, -1.554037e-002, -8.498763e-003, -4.354127e-003, -4.393434e-004, -1.031383e-002, -6.062861e-003, -8.295908e-003, -1.571867e-002, -1.952525e-002, -2.598772e-002, -1.924177e-002, -8.362203e-003, -1.693055e-002, -1.815647e-002, -4.479935e-003, 1.164756e-002, -2.054813e-002, -3.764364e-002, 1.343017e-002, 3.101884e-002, -1.327642e-002, -2.853413e-002, -8.045677e-003, 8.284902e-003, 1.715598e-002, 1.133675e-002, -1.255188e-003, -1.101340e-002, -9.492186e-003, 3.442476e-003, 1.757580e-002, 2.279815e-002, 1.583836e-002, 7.448193e-003, 9.871866e-003, 8.082156e-003, 1.228977e-002, 1.358555e-002, 9.935617e-003, 2.400425e-003, 2.824189e-003, 5.137792e-003, 1.708505e-002, 2.373438e-002, 1.594474e-002, -4.816846e-003, -1.802470e-002, -1.485063e-002, -1.500502e-002, -1.899814e-002, -9.658762e-003, -5.666829e-003, -1.127140e-002, -1.563063e-002, -3.463219e-002, -4.503646e-002, -2.432110e-002, 5.821057e-003, -8.867344e-003, -1.018385e-002, -8.430703e-003, 6.691308e-003, -3.224298e-003, -3.890305e-002, -8.383012e-003, 2.548367e-002, -9.824223e-003, -3.076019e-002, -1.306493e-002, 2.441318e-004, -3.806587e-003, -9.615864e-003, -4.615123e-003, -1.103747e-002, -2.137280e-003, 4.158027e-003, -3.917912e-004, -1.012995e-002, -1.464471e-002, -1.539467e-002, -6.948256e-003, -1.189691e-004, 2.283923e-002, 3.734254e-002, 3.392458e-002, 1.342948e-002, -2.522621e-003, -3.278915e-003, 1.186293e-002, 1.826586e-002, 1.274956e-002, -1.037815e-002, -2.081609e-002, -2.276133e-002, -2.613506e-002, -1.652418e-002, -1.629058e-003, 5.976306e-004, -6.913383e-003, -8.877007e-003, -2.589866e-002, -3.434920e-002, -3.376758e-002, 3.535327e-003, 2.245418e-003, 2.257140e-003, -1.101970e-002, -5.692178e-003, 1.320647e-002, -1.587573e-002, -2.608515e-002, 1.211484e-002, -6.896786e-003, -3.123445e-002, -1.828149e-002, -1.044046e-002, -1.865604e-002, -1.666324e-002, -1.060168e-002, -7.553215e-003, 1.361302e-002, 2.022903e-002, 7.873318e-003, 1.401682e-003, -3.579582e-003, -8.496167e-004, 7.693490e-003, 1.503592e-002, 3.007387e-002, 4.706428e-002, 5.436541e-002, 2.674100e-002, -1.271433e-002, -1.922309e-002, 9.201256e-004, 1.389217e-002, 6.149526e-003, -1.881852e-002, -2.234783e-002, -2.623419e-002, -3.053542e-002, -8.478330e-003, 1.422788e-003, -2.693469e-003, 1.430840e-003, 4.315766e-003, 9.181960e-003, -1.644636e-002, -2.880629e-002, 4.073988e-003, 7.673419e-003, 1.794524e-002, -2.822011e-003, -1.238425e-002, 1.723791e-002, 7.661529e-003, -3.014269e-002, -5.398533e-003, -7.304651e-003, -2.397120e-002, -2.034137e-002, -7.196891e-003, -9.673269e-003, -1.514826e-002, -2.620968e-002, -1.701952e-002, 8.281114e-003, 1.839315e-002, 1.908490e-002, 1.654659e-002, 9.730457e-003, 2.124123e-003, 6.587257e-003, 1.223500e-002, 2.878959e-002, 3.784976e-002, 4.014780e-002, 2.153514e-002, -1.054244e-002, -2.167784e-002, -1.759988e-003, 1.249968e-002, 2.155725e-003, -1.465490e-002, -1.843476e-002, -1.827846e-002, -2.214525e-002, 7.689240e-003, 1.128820e-002, 1.822577e-003, 1.120765e-002, 1.450139e-002, 1.304846e-002, -1.070089e-002, -2.115140e-002, 7.170826e-003, 1.209179e-002, 2.685621e-002, 8.154249e-003, -1.156382e-002, 1.830445e-002, 3.444889e-002, -1.616820e-002, -2.352666e-002, -1.044240e-003, -1.450264e-002, -1.567594e-002, 2.247037e-003, 8.961793e-003, -9.320835e-003, -3.351901e-002, -2.076923e-002, 9.716814e-003, 2.332537e-002, 2.089464e-002, 8.210693e-003, -1.108661e-002, -2.020692e-002, -1.587062e-002, -8.335055e-003, 5.580763e-003, 2.004333e-002, 2.995437e-002, 2.683820e-002, 4.746847e-003, -1.112030e-002, -3.593437e-004, 1.128065e-002, 2.635699e-003, -4.420298e-003, -1.536138e-003, -5.338018e-003, 1.689326e-003, 1.932286e-002, 7.484247e-003, 1.111664e-002, 1.836856e-002, 1.762452e-002, 5.513040e-003, -1.462587e-002, -1.954136e-002, -9.477631e-004, 7.259029e-003, 3.071444e-002, 8.649961e-003, -8.641760e-003, 1.303772e-002, 4.589984e-002, -5.829238e-004, -4.162736e-002, 3.262900e-003, -4.370722e-003, -9.965357e-003, 1.020749e-002, 2.444929e-002, -3.005323e-003, -2.769437e-002, -1.439411e-002, 1.699804e-002, 3.414285e-002, 3.317352e-002, 2.134714e-002, 2.181340e-003, -1.149257e-002, -1.466577e-002, -1.924915e-002, -1.249121e-002, 6.764539e-003, 2.718431e-002, 3.256790e-002, 1.969066e-002, 1.675053e-003, -5.073721e-004, 2.365172e-003, -4.150201e-004, 3.962073e-003, 1.383753e-002, 1.088117e-002, 1.807184e-002, 1.974932e-002, -6.039393e-003, 6.722974e-003, 2.028445e-002, 1.246165e-002, -1.217254e-003, -2.143751e-002, -2.034286e-002, -5.914432e-003, -6.454649e-003, 2.071724e-002, 1.327623e-002, 8.004262e-004, 6.783973e-003, 3.577404e-002, 1.443964e-002, -3.944125e-002, -1.297684e-003, 7.586563e-003, -4.042224e-003, 6.641365e-003, 2.666473e-002, 1.526312e-002, -1.562641e-003, -1.536014e-003, 1.459890e-002, 3.107919e-002, 3.370360e-002, 1.395246e-002, -7.545918e-003, -2.084881e-002, -2.844522e-002, -3.330663e-002, -2.618005e-002, -5.935614e-003, 1.751610e-002, 3.117225e-002, 2.176352e-002, -3.586439e-004, -8.545960e-003, -7.008154e-003, -2.812311e-004, 1.642315e-002, 2.082559e-002, 1.024894e-002,

© ISO/IEC 2004 — All rights reserved


Copyright International Organization for Standardization
Provided by IHS under license with ISO
No reproduction or networking permitted without license from IHS
Not for Resale

1.902911e-002, 6.899818e-003, -8.560281e-003, 6.119186e-003, 1.546495e-002, 9.268059e-003, -3.126229e-003, -2.342327e-002, -2.142164e-002, -6.401416e-003, -2.219054e-002, -7.470595e-004, 7.139072e-003, -2.363777e-003, -1.860066e-003, 1.375307e-002, 1.848350e-002, -1.942435e-002, -7.887948e-003, 1.579117e-002, 3.043749e-003, 1.789424e-003, 2.511440e-002, 3.318312e-002, 1.841744e-002, 8.400091e-003, 1.344927e-002, 2.292716e-002, 2.573339e-002, 1.243832e-002, -3.576741e-003, -1.574866e-002, -2.196600e-002, -2.679828e-002, -1.802688e-002, -5.135407e-003, 1.595463e-002, 2.109914e-002, 7.725587e-003, -1.093905e-002, -2.074654e-002, -1.516301e-002, 5.680979e-003, 3.132902e-002, 1.637777e-002, 5.694373e-003, 1.346372e-002, -3.750693e-003, -2.504164e-003, 9.280180e-003, 1.034342e-002, 1.405180e-003, -6.011732e-003, -2.426754e-002, -1.537614e-002, -1.028223e-002, -2.895560e-002, -2.160554e-002, -5.265724e-003, -6.191155e-003, -1.488903e-002, -1.060173e-002, -3.072541e-003, -1.597978e-002, -1.902058e-003, 1.747823e-002, 9.695881e-003, 8.553431e-004, 1.956424e-002, 3.705352e-002, 2.997477e-002, 1.496956e-002, 9.881894e-003, 1.166191e-002, 1.042796e-002, -9.468393e-004, -1.369186e-002, -1.870580e-002, -1.906398e-002, -1.556038e-002, -9.548049e-003, 2.509607e-003, 1.486990e-002, 1.186744e-002, -2.833992e-003, -1.854177e-002, -2.176693e-002, -5.673344e-003, 1.627957e-002, 2.930747e-002, -7.580144e-005, -1.137006e-002, 1.313752e-003, -8.133521e-003, -9.431631e-004, 1.327253e-003, 5.199630e-003, 8.242985e-004, -9.103328e-003, -2.738095e-002, -4.070406e-003, -1.287911e-003, -2.202531e-002, -2.142018e-002, 7.327491e-004, 4.301790e-003, -1.660497e-002, -3.344196e-002, -2.248211e-002, -9.654276e-003, 1.786588e-002, 5.918156e-003, -2.705811e-003, -2.486265e-003, 1.109559e-002, 3.292589e-002, 3.799045e-002, 2.731191e-002, 1.106391e-002, 5.628101e-003, 9.539063e-004, -9.417857e-003, -1.815962e-002, -1.923915e-002, -1.263950e-002, -7.389025e-003, -2.438801e-003, 7.069202e-003, 1.606908e-002, 8.845846e-003, -4.111620e-003, -1.690952e-002, -8.556713e-003, 5.533278e-003, 1.512334e-002, 1.643370e-002, -9.304372e-003, -2.282283e-002, -1.929208e-002, -1.297487e-002, 1.745752e-003, -1.371875e-002, -7.699795e-003, -1.066976e-002, -6.905782e-003, -1.920496e-002, 1.233501e-002, 1.949419e-002, -9.996261e-003, -1.215350e-002, 2.163759e-003, 6.811167e-003, -2.432244e-003, -1.924863e-002, -4.491032e-003, 6.589095e-003, 2.034141e-002, -1.288122e-002, -2.392281e-002, -1.745826e-002, -2.719026e-003, 1.709398e-002, 3.073659e-002, 2.553802e-002, 1.574259e-002, 9.233302e-003, 2.788718e-003, -4.810988e-003, -8.619350e-003, -9.716712e-003, -5.688181e-003, -2.268523e-003, 7.029231e-003, 1.727025e-002, 2.344280e-002, 1.850045e-002, 4.584052e-003, 2.018059e-004, 3.711973e-003, 3.179983e-003, -2.444207e-003, 7.023130e-003, 4.154380e-003, -1.117391e-002, -1.533636e-002, -9.602261e-003, -9.531955e-003, -2.508673e-002, -1.441536e-002, -7.243316e-003, 7.388252e-003, 5.797023e-003, 2.271467e-002, 2.311960e-002, -1.214705e-002, -3.712800e-003, 1.405943e-002, 1.681600e-002, 1.089244e-002, -9.946774e-004, 8.499651e-003, -2.328325e-003, 1.007093e-002, -1.872938e-002, -2.713633e-002, -2.170756e-002, -1.256859e-002, -3.399510e-003, 8.669442e-003, 1.068455e-002, 5.902066e-003, 5.495306e-003, 1.369271e-003, 1.300027e-003, -3.750066e-004, 3.510904e-004, 3.994659e-003, 1.289808e-002, 2.077308e-002, 2.878621e-002, 3.087337e-002, 2.535848e-002, 1.460479e-002, 9.165082e-003, 8.921081e-003, 2.098155e-003, -2.153679e-002, -6.724072e-003, 9.182861e-003, -2.247236e-003, 5.787505e-004, 6.646909e-003, -6.037295e-003, -1.967804e-002, -1.408824e-002, -4.918276e-003, 2.129941e-002, 3.265323e-002, 1.452466e-002, 1.554295e-002, -2.016369e-002, -1.337235e-002, 8.519621e-003, 1.107672e-002, 4.130116e-003, 1.469606e-003, 6.172907e-003, -1.596727e-002, 3.847685e-004, -1.788732e-002, -1.278562e-002, -1.047377e-002, -1.560545e-002, -1.842463e-002, -1.598959e-002, -1.486513e-002, -1.137571e-002, -4.907575e-003, -7.774457e-003, -1.298359e-002, -1.206202e-002, -3.812408e-003, 4.929396e-003, 1.143464e-002, 1.652656e-002, 1.839047e-002, 1.437782e-002, 1.052343e-002, 1.011349e-003, -1.009654e-003, 1.129591e-002, -2.579113e-003, -2.627863e-002, -1.112355e-002, 2.345204e-003, -1.468639e-002, 8.324598e-004, 9.685440e-003, 6.143687e-003, 1.320100e-002, -1.803587e-003, -2.173650e-002, 1.217074e-002, 3.694160e-002, 2.423366e-002, 1.994162e-002, -1.187394e-002, 2.572787e-003, 1.797764e-002, 2.079186e-002, 1.173474e-002, 1.169818e-002, 1.198093e-002, -1.589305e-002, 1.012255e-002, 3.987968e-003, 5.666164e-003, 5.727290e-003, -4.409038e-003, -1.709535e-002, -2.233241e-002, -2.716395e-002, -2.555332e-002, -1.772523e-002, -1.258515e-002, -1.776219e-002, -1.059203e-002, -1.089099e-003, 9.217595e-003, 1.178552e-002, 1.277002e-002, 1.047289e-002, 1.511364e-003, -3.808702e-003, -3.751241e-003, 1.145883e-003, 1.808451e-002, 4.771875e-003, -1.249345e-002, 6.004937e-003, 1.245791e-002, -6.513168e-003, 2.499586e-003, 4.303498e-003, 1.103366e-002, 2.746775e-002, 2.103921e-002, -1.193724e-002, 1.619606e-003, 2.587734e-002, 1.832552e-002, 1.517979e-002, 1.941396e-002, 1.012961e-002, 1.945280e-002, 9.605411e-003, -4.467483e-003, 1.575092e-002, 2.677789e-002, 1.379106e-002, 4.648605e-002, 3.092845e-002, 2.413298e-002, 2.292844e-002, 1.602457e-002, 1.061904e-002, 5.986577e-003, -3.468900e-003, 2.595896e-003, 8.613922e-003, 1.385650e-002, 9.497443e-003, 9.845367e-003, 1.052189e-002, 1.343583e-002, 8.510785e-003, 5.704470e-003, 5.460747e-003, -1.684691e-003, -9.900248e-003, -3.707262e-003, 1.065799e-002, 2.680131e-002, 4.501780e-003, 1.032205e-003, 1.943128e-002, 2.005082e-002, 2.649260e-003, -2.664786e-003, -1.618940e-002, -4.119406e-003, 2.574086e-002, 2.748256e-002, 7.561241e-003, -1.209988e-002, 4.870899e-003, 8.110277e-003, 1.943702e-002, 2.343289e-002, 4.553284e-003, -2.496202e-003, -1.789852e-002, -2.384603e-002, 1.011844e-002,


© ISO/IEC 2004 — All rights reserved

Copyright International Organization for Standardization
Provided by IHS under license with ISO
No reproduction or networking permitted without license from IHS
Not for Resale

2.736954e-002, 9.313176e-003, 2.936124e-002, 1.478745e-002, 3.046823e-003, -4.721320e-005, 6.340563e-003, 3.286928e-003, -1.613727e-003, -9.166145e-003, -3.378075e-003, 1.136855e-002, 1.765611e-002, 1.897728e-002, 1.751115e-002, 1.451850e-002, 1.084798e-002, 5.777299e-003, -1.478152e-003, -7.720104e-003, -2.079398e-002, -2.036315e-002, -9.469668e-003, 8.368476e-003, 1.169101e-002, -1.036000e-002, 5.952843e-004, 1.733148e-002, 1.285906e-002, -3.853287e-003, -5.751998e-004, -1.556879e-002, -2.794817e-002, -6.863790e-003, 1.365339e-002, 2.459779e-003, -2.412632e-002, -1.909133e-002, 1.582427e-002, 2.015704e-002, 6.733341e-003, -1.635319e-002, -2.616051e-002, -3.517939e-002, -2.454703e-002, 8.310650e-003, 3.562454e-003, -1.799955e-002, -3.524659e-003, -1.447450e-002, -3.477134e-002, -3.008213e-002, -1.473228e-002, -1.321124e-002, -1.804294e-002, -2.808555e-002, -1.515928e-002, 2.484736e-003, 6.570685e-003, 9.127132e-003, 6.387392e-003, 2.278047e-003, -1.082959e-003, -9.448642e-003, -1.543377e-002, -2.088298e-002, -2.309897e-002, -2.622175e-002, -2.097072e-002, -1.368425e-002, -2.082676e-002, -2.779416e-002, -1.262692e-002, -2.115509e-003, -5.173135e-003, -1.525790e-002, 4.934552e-003, 4.942745e-003, -1.620652e-002, -1.604407e-002, -1.325729e-002, -1.834374e-002, -2.448904e-002, -2.407924e-002, 1.233303e-002, 1.131683e-002, 2.072086e-003, 7.214511e-003, 6.189371e-003, -4.576434e-003, -1.226276e-002, 4.128027e-003, -1.035850e-002, -2.690050e-002, -5.623532e-003, -1.096432e-002, -3.029157e-002, -3.018236e-002, -2.504636e-003, 5.337143e-003, -2.928180e-005, -8.103095e-003, -4.045261e-003, 9.670738e-003, 1.959418e-002, 2.422311e-002, 2.537401e-002, 1.978229e-002, 1.495956e-002, 9.440128e-003, 3.727330e-003, 4.145511e-003, -3.095716e-003, -1.389238e-002, -1.306699e-002, -1.394879e-002, -2.100854e-002, -2.032389e-002, 1.941450e-003, 1.601678e-002, 3.735183e-003, -1.180270e-002, 1.391298e-002, 3.112787e-002, 1.392549e-002, 4.371896e-003, -1.773315e-003, -1.161959e-002, 5.126717e-003, 2.509230e-002, 2.580653e-002, 2.586926e-002, 2.677395e-002, 2.524372e-002, 2.530361e-002, -2.215248e-003, -2.253701e-002, -1.306153e-002, -2.460051e-002, -3.603793e-002, -2.398074e-002, -1.558506e-002, -2.884785e-002, -3.369772e-002, -1.470498e-002, 1.573595e-003, -3.877371e-003, -1.099558e-002, -1.285534e-002, -6.786844e-003, 3.935649e-003, 1.506595e-002, 1.798032e-002, 1.797209e-002, 1.668889e-002, 1.732613e-002, 1.090299e-002, 1.140677e-002, 1.032209e-002, -6.263093e-003, -1.310225e-002, -1.689748e-002, -2.136046e-002, -2.446579e-002, -5.332941e-003, 8.346546e-003, -1.521674e-002, -3.605273e-002, -1.918821e-002, 6.887910e-004, -1.187598e-002, -2.037359e-002, -3.002521e-002, -2.481775e-002, -2.537157e-003, 3.073471e-002},
{1.177983e-002, 6.229545e-003, 2.277327e-002, 1.889004e-002, 1.703836e-002, 1.613494e-002, 5.488019e-003, -2.263280e-002, -4.790337e-002, -3.719542e-002, -1.103055e-002, 4.206667e-003, 2.025596e-002, 2.966575e-002, 2.697967e-002, 1.771453e-002, 8.993790e-003, 1.257464e-002, 1.639550e-002, 1.793028e-002, 1.934410e-002, 1.802829e-002, 1.075611e-002, -1.238445e-003, -1.781392e-002, -2.942700e-002, -3.176540e-002, -3.247396e-002, -2.840496e-002, -1.752698e-002, 1.802007e-003, 2.145016e-002, 3.317913e-002, 2.455983e-002, 5.700972e-003, -6.041354e-003, -7.904623e-003, -8.041313e-003, -1.608153e-002, -2.765648e-002, -3.503204e-002, -2.986578e-002, -1.396270e-002, -8.250169e-003, 2.530423e-003, 1.010847e-002, 3.620602e-002, 1.124083e-002, 2.733499e-002, 2.756697e-002, 2.511493e-002, 2.533157e-002, 4.375129e-003, -1.937802e-002, -2.394984e-002, -1.721339e-002, -1.944930e-002, -1.567096e-002, -1.079954e-002, -1.468552e-002, -2.113567e-002, -2.152380e-002, -1.083882e-002, 6.476430e-003, 2.002478e-002, 2.538599e-002, 3.424948e-002, 3.957309e-002, 3.380598e-002, 2.668420e-002, 1.009717e-002, -4.048745e-003, -9.807298e-003, -1.280563e-002, -1.209866e-002, -8.923909e-003, -6.634011e-004, 7.997255e-003, 1.835845e-002, 1.689976e-002, 5.733055e-003, -1.146005e-002, -1.777713e-002, -6.808521e-003, 4.454275e-003, 3.290019e-003, -1.866923e-003, -3.065183e-003, 1.374758e-002, 3.649438e-002, 1.898380e-002, 2.600115e-002, 2.697643e-002, -1.444936e-003, 8.422795e-003, 7.480551e-003, 1.270528e-002, 9.754149e-003, 1.370828e-003, -2.939689e-003, -4.253448e-003, -1.820797e-002, -2.000808e-002, -1.198582e-002, -1.734501e-002, -2.201267e-002, -1.800961e-002, -8.897716e-003, 2.225510e-003, 1.404986e-002, 2.603276e-002, 3.293096e-002, 3.466944e-002, 3.671528e-002, 2.743827e-002, 1.631274e-002, 1.277205e-003, -1.367543e-002, -1.788751e-002, -1.746415e-002, -1.568830e-002, -1.175379e-002, 3.929780e-004, 1.362280e-002, 1.940685e-002, 1.401343e-002, 9.293550e-003, -1.436213e-004, -1.330699e-002, -1.465929e-002, -2.392488e-003, 1.219023e-002, 5.937203e-003, -1.935488e-003, -1.147569e-004, 2.191852e-002, 1.666282e-002, 2.719269e-002, 1.752792e-002, -1.517332e-002, -8.418135e-003, -4.413355e-003, 7.491768e-003, 6.823359e-003, 1.955526e-002, 1.544033e-002, -4.248262e-004, -9.486326e-003, 2.354260e-003, -2.907208e-003, -1.497116e-002, -1.302951e-002, -7.757888e-003, -1.542569e-005, 3.468994e-003, 7.149651e-003, 1.252069e-002, 2.069141e-002, 2.615492e-002, 3.009079e-002, 2.396376e-002, 1.068423e-002, -4.429035e-003, -1.996049e-002, -2.655674e-002, -2.692948e-002, -2.448144e-002, -1.601233e-002, -6.693971e-003, 4.038830e-003, 1.594393e-002, 1.709564e-002, 7.260404e-003, -8.447263e-004, -5.411442e-003, -1.019794e-002, -1.282422e-002, -3.340234e-003, 1.128071e-002, 2.021819e-003, -1.238913e-002, -4.656275e-003, -2.961649e-004, 1.324775e-002, 9.661645e-003, -2.667611e-002, -1.492977e-002, -3.865899e-003, -2.191528e-003, 1.291290e-002, 3.200234e-002, 1.413602e-002, 7.842833e-003, 1.669351e-002, 1.326807e-002, -4.366554e-004, -8.355459e-003, -1.242582e-002, -1.813644e-002, -1.824191e-002, -1.039610e-002, -1.104805e-003, 1.424143e-002, 2.657834e-002, 3.420127e-002, 4.095381e-002, 3.779566e-002, 2.174516e-002,

© ISO/IEC 2004 — All rights reserved


Copyright International Organization for Standardization
Provided by IHS under license with ISO
No reproduction or networking permitted without license from IHS
Not for Resale

7.987151e-003, -9.146624e-003, -2.219201e-002, -2.720793e-002, -2.497226e-002, -1.524484e-002, -4.077025e-003, -8.790126e-004, 3.106291e-003, 2.405816e-003, -6.462745e-004, 1.254698e-003, -7.695049e-003, -1.476948e-002, -1.851421e-002, -1.771645e-002, -1.151702e-002, -1.066021e-003, -7.240848e-003, -1.871433e-002, -1.412173e-002, 3.600254e-003, -4.940442e-003, -3.709055e-002, -1.278460e-002, -4.603594e-003, 7.218473e-003, 2.613699e-002, 2.393761e-002, 7.972458e-003, 1.282495e-002, 1.519004e-002, 1.117278e-003, -1.357633e-002, -1.987604e-002, -3.040929e-002, -3.131240e-002, -1.978635e-002, -1.294854e-002, -7.239568e-003, 7.552051e-003, 2.184891e-002, 3.891749e-002, 4.833143e-002, 4.171279e-002, 2.300118e-002, 3.998262e-003, -1.326137e-002, -2.613111e-002, -2.938608e-002, -2.414296e-002, -1.486245e-002, -9.190029e-003, -2.720751e-003, -6.658930e-003, -1.249611e-002, -2.028879e-002, -9.637630e-003, -6.854012e-003, -1.107216e-002, -1.284321e-002, -1.785055e-002, -1.231828e-002, -6.335215e-003, 3.378285e-003, -1.698047e-002, -2.112087e-002, 5.564314e-004, -8.769370e-003, -3.615457e-002, -7.218838e-003, 7.179674e-004, 1.569848e-002, 1.919187e-002, 6.890036e-003, 8.920266e-003, 8.892354e-003, 2.336261e-003, -3.947676e-003, -1.369469e-002, -2.638327e-002, -2.913881e-002, -2.035028e-002, -1.316512e-002, -1.558817e-002, -1.305075e-002, -2.407251e-003, 1.290163e-002, 3.129826e-002, 3.706895e-002, 3.040917e-002, 6.509939e-003, -1.834556e-002, -3.751957e-002, -4.703929e-002, -4.490342e-002, -2.821018e-002, -1.022887e-002, 1.903073e-003, 9.216786e-003, 5.638573e-003, -8.895773e-003, -2.008825e-002, -2.692994e-002, -4.345608e-003, 2.528441e-003, -2.893428e-003, -6.417452e-003, -8.081206e-004, 2.856227e-003, 6.507969e-003, 1.616239e-003, -1.799826e-002, -3.504745e-003, -1.486181e-003, -2.379073e-002, 6.241639e-003, 2.372004e-003, 3.033928e-003, -9.305142e-004, 4.026072e-003, 6.860700e-003, -2.086103e-003, -3.337867e-004, -3.349129e-004, -1.536407e-002, -1.305664e-002, -1.143953e-002, -1.110338e-002, -1.642122e-002, -2.609978e-002, -2.056504e-002, -8.742147e-003, 1.122732e-002, 3.138348e-002, 3.933984e-002, 2.912897e-002, 3.256082e-003, -2.421386e-002, -4.221311e-002, -5.092733e-002, -4.721444e-002, -3.268621e-002, -1.511437e-002, 6.003608e-003, 2.113585e-002, 2.395219e-002, 9.867037e-003, -8.714123e-003, -1.880383e-002, -1.743911e-002, 4.576591e-003, 6.995329e-003, 9.473543e-003, 6.754384e-003, 1.203566e-002, 1.073823e-002, 1.182184e-002, -8.871343e-003, -6.554487e-003, 1.031059e-002, -9.637108e-003, 5.902969e-003, -7.438954e-003, -7.235452e-003, -7.080994e-003, 4.142172e-003, 1.670703e-003, -1.003136e-003, 8.168613e-003, -1.817006e-004, -3.786670e-003, 4.750325e-003, 4.691985e-003, -6.180820e-003, -2.040653e-002, -3.178522e-002, -2.538010e-002, -1.363188e-002, 9.838864e-003, 3.056363e-002, 4.367276e-002, 3.755553e-002, 1.440213e-002, -7.132695e-003, -1.963249e-002, -2.667031e-002, -2.293740e-002, -1.326542e-002, -5.415941e-003, 6.580102e-003, 2.560719e-002, 3.289492e-002, 2.728444e-002, 1.164990e-002, -1.927998e-003, -1.272933e-002, -1.101862e-003, 1.188693e-002, 1.696509e-002, 1.709389e-002, 1.117110e-002, 7.223784e-003, 8.779237e-003, -2.431970e-004, 1.282005e-003, 2.255385e-002, -1.081039e-003, 1.628088e-003, -1.655009e-002, -1.374108e-002, -4.103044e-003, 5.854941e-003, 3.291057e-003, 1.007225e-002, 1.129343e-002, 5.028096e-003, 1.045180e-002, 1.742410e-002, 1.295861e-002, -2.152223e-003, -2.082239e-002, -2.951854e-002, -3.306875e-002, -1.791114e-002, 3.859631e-003, 2.613251e-002, 3.918365e-002, 3.918471e-002, 2.798052e-002, 1.534348e-002, 8.359879e-003, 3.843671e-003, 3.928674e-003, 1.097799e-002, 1.531826e-002, 1.817424e-002, 2.665300e-002, 3.312699e-002, 2.660222e-002, 2.290358e-002, 1.602259e-002, 5.662277e-003, -5.328773e-004, 9.763911e-003, 5.569848e-003, 1.469521e-002, 1.232842e-002, 3.888950e-003, -9.764801e-004, 1.746973e-002, 1.296723e-002, 3.202156e-002, 2.164975e-002, -9.792511e-003, -2.110376e-002, -1.116473e-002, 3.154191e-003, 7.608648e-003, 4.870772e-003, 1.231390e-002, 7.751835e-003, 1.135946e-002, 1.715620e-002, 1.597284e-002, 5.176053e-003, -9.031197e-003, -2.111350e-002, -3.264660e-002, -3.506563e-002, -2.511462e-002, -1.051321e-002, 1.087369e-002, 2.212324e-002, 2.839577e-002, 2.575685e-002, 1.929073e-002, 1.932624e-002, 1.916135e-002, 1.955063e-002, 2.450714e-002, 3.040331e-002, 3.067438e-002, 3.318867e-002, 2.523085e-002, 1.468055e-002, 1.318411e-002, 1.883675e-002, 1.385704e-002, 5.003867e-003, 7.488792e-003, -9.316937e-004, 4.722455e-004, 8.009654e-003, -8.133655e-003, -7.132619e-003, 1.192785e-002, 1.743078e-002, 3.791672e-002, 2.189720e-002, -2.083546e-002, -2.200525e-002, -6.387381e-003, 4.013483e-003, 2.808726e-003, 2.878539e-003, 9.336732e-004, 3.245139e-003, 1.038218e-002, 1.354148e-002, 8.072033e-003, -5.785843e-003, -1.495778e-002, -2.125520e-002, -2.865407e-002, -3.594662e-002, -3.537173e-002, -2.669404e-002, -1.327789e-002, -5.066736e-003, 6.941849e-003, 7.351887e-003, 6.724627e-003, 1.255956e-002, 1.615470e-002, 1.535705e-002, 1.635474e-002, 2.208725e-002, 2.421546e-002, 2.942889e-002, 1.698728e-002, -2.021084e-003, -5.995087e-003, -4.070613e-003, 6.152528e-003, 5.464882e-003, 1.234485e-002, -5.284224e-003, -1.586471e-002, -2.135977e-003, -1.235403e-002, -1.837399e-002, 6.250353e-003, 1.461944e-002, 4.220936e-002, 1.405164e-002, -2.678155e-002, -1.253461e-002, 6.656264e-004, 7.839200e-005, -2.004685e-003, -4.644264e-003, -7.968087e-003, -2.479208e-004, 2.072611e-003, 1.636511e-003, -1.799021e-003, -1.066727e-002, -1.239622e-002, -1.612176e-002, -2.298366e-002, -3.311157e-002, -4.027032e-002, -3.878010e-002, -3.601388e-002, -2.857325e-002, -2.038236e-002, -2.203535e-002, -1.559116e-002, -6.078694e-003, -7.245853e-004, 5.363457e-004, -1.923416e-003, 5.738352e-004, 6.230136e-003, 1.310738e-002, 1.025032e-002, -6.185785e-003, -1.823290e-002, -2.721000e-002, -1.353991e-002, -8.946516e-004, 1.418500e-002, 4.771324e-003, -


© ISO/IEC 2004 — All rights reserved

Copyright International Organization for Standardization
Provided by IHS under license with ISO
No reproduction or networking permitted without license from IHS
Not for Resale

2.286917e-002, -8.404324e-003, -9.874539e-003, -2.726392e-002, 3.021536e-003, 1.136437e-002, 3.924716e-002, 5.592085e-003, -1.850608e-002, 4.450702e-003, -1.422191e-004, -4.001158e-003, -7.748127e-003, -1.054586e-002, -7.552218e-003, 6.582407e-004, -3.204822e-003, -2.268884e-003, -1.511579e-003, -2.540898e-003, -7.153889e-004, 1.992644e-003, -2.494053e-003, -1.443683e-002, -3.030711e-002, -3.781641e-002, -4.450814e-002, -4.397867e-002, -4.179446e-002, -4.117023e-002, -3.664608e-002, -2.731778e-002, -1.719629e-002, -1.779489e-002, -1.881402e-002, -1.773334e-002, -1.394166e-002, -2.218101e-003, 7.079566e-003, 9.434293e-004, -1.845624e-002, -4.057478e-002, -3.427140e-002, -1.293579e-002, 6.256571e-003, 7.068428e-003, -2.459376e-002, -6.823720e-003, -1.315216e-002, -3.260563e-002, 6.155788e-003, 1.520846e-002, 2.133586e-002, -5.815035e-003, -4.067820e-003, 1.537996e-002, -3.298666e-003, -8.958561e-003, -5.198009e-003, -3.815673e-003, 5.049692e-003, 1.436656e-003, -4.908241e-004, 2.782706e-003, 9.774227e-003, 1.769574e-002, 2.246054e-002, 2.697989e-002, 2.511478e-002, 1.302555e-002, -5.389190e-003, -1.880909e-002, -3.324092e-002, -3.615979e-002, -3.817017e-002, -4.144123e-002, -3.460771e-002, -2.729866e-002, -2.096374e-002, -2.389072e-002, -2.827706e-002, -2.639724e-002, -2.128067e-002, -8.608464e-003, 7.600166e-003, 1.132230e-002, -3.703743e-003, -3.113617e-002, -4.235869e-002, -2.069022e-002, 3.534407e-003, 2.712924e-003, -2.377171e-002, -9.782915e-003, -1.347982e-002, -3.012366e-002, 5.915914e-003, 1.739671e-002, 5.213443e-003, -1.175639e-002, 7.439225e-003, 1.739326e-002, -1.966681e-003, -5.049755e-003, -1.419794e-003, 4.854061e-003, 1.011461e-002, -6.165248e-004, 4.914338e-003, 1.298355e-002, 2.819829e-002, 4.429293e-002, 5.369654e-002, 5.657864e-002, 5.377351e-002, 3.951849e-002, 2.080311e-002, 2.621506e-003, -1.113273e-002, -1.653835e-002, -1.847673e-002, -1.939499e-002, -1.729483e-002, -1.202356e-002, -8.069376e-003, -5.453338e-003, -1.285190e-002, -1.596743e-002, -1.248138e-002, 5.173508e-004, 1.890084e-002, 3.003252e-002, 1.987339e-002, -1.058920e-002, -3.322441e-002, -1.663813e-002, 1.082126e-002, 3.769933e-003, -1.706272e-002, -2.707007e-003, -8.724664e-003, -2.492100e-002, 8.551920e-003, 1.290468e-002, -1.067659e-002, -1.173016e-002, 1.615320e-002, 2.026633e-002, -6.154768e-004, 1.307860e-003, 2.159731e-003, 7.194934e-003, 9.411215e-003, 6.366360e-003, 1.275004e-002, 1.827367e-002, 3.244642e-002, 4.857979e-002, 6.023323e-002, 5.899264e-002, 5.386224e-002, 4.104219e-002, 2.931835e-002, 1.438653e-002, 6.355227e-003, 4.163754e-003, 2.159510e-003, 4.442839e-003, 1.067068e-002, 1.529795e-002, 1.304365e-002, 1.116694e-002, 1.625365e-003, -5.416727e-003, -5.624677e-003, 5.239205e-003, 2.106552e-002, 4.081613e-002, 4.094963e-002, 1.422745e-002, -7.543445e-003, 9.982622e-004, 2.523476e-002, 9.912371e-003, -3.842862e-003, 8.070901e-003, -2.900812e-004, -1.054114e-002, 1.181275e-002, 9.451706e-003, -2.117079e-002, -1.068987e-002, 2.252723e-002, 1.697376e-002, -2.712686e-003, 3.676074e-003, 9.774115e-003, 1.018550e-002, 7.304893e-003, 1.030285e-002, 7.921238e-003, -6.963113e-003, -1.169084e-002, -1.161314e-002, -4.925794e-003, 1.840065e-003, 7.240013e-003, 1.114597e-002, 1.225969e-002, 7.248577e-003, 5.907003e-003, 7.646760e-003, 7.230273e-003, 1.430187e-002, 2.628281e-002, 3.572115e-002, 3.465094e-002, 2.401213e-002, 9.522884e-003, -7.139247e-003, -1.862707e-002, -2.161761e-002, -1.390148e-002, 1.048309e-002, 3.544927e-002, 3.126344e-002, 1.301601e-002, 1.720618e-002, 3.245502e-002, 1.142708e-002, 5.472263e-003, 2.015243e-002, 9.781299e-003, 7.626106e-003, 2.152794e-002, -1.972225e-003, -2.794097e-002, -5.502744e-003, 1.848161e-002, 7.724010e-003, -6.970952e-003, 6.331403e-003, 1.994671e-002, 1.270489e-002, -1.579258e-003, 6.025928e-003, -1.801850e-002, -6.098885e-002, -7.950683e-002, -7.374898e-002, -3.860895e-002, 2.351305e-003, 2.983031e-002, 4.081017e-002, 3.009407e-002, 1.492070e-002, 1.861647e-003, -3.139645e-003, -2.636877e-003, 6.983136e-003, 2.069000e-002, 3.691955e-002, 4.632074e-002, 4.228355e-002, 3.581505e-002, 1.817409e-002, -1.294222e-002, -4.449469e-002, -6.108790e-002, -5.149477e-002, -1.664903e-002, 1.648389e-002, 1.893259e-002, 2.838430e-002, 3.180156e-002, 9.423501e-003, 7.146066e-003, 3.356809e-002, 1.631178e-002, 1.475910e-002, 2.746452e-002, -9.979618e-003, -3.883602e-002, -1.204663e-002, 7.556314e-003, -5.066560e-005, -8.476195e-003, 7.338649e-003, 1.867687e-002, 5.309845e-004, -1.485257e-002, 1.032504e-002, -1.650814e-002, -6.940937e-002, -8.570227e-002, -6.995028e-002, -2.932129e-002, 2.390920e-002, 6.828219e-002, 8.709897e-002, 7.378366e-002, 3.751403e-002, -3.048723e-003, -2.885957e-002, -3.643380e-002, -2.312710e-002, -5.302336e-003, 1.242051e-002, 3.842698e-002, 5.502119e-002, 5.515304e-002, 3.807394e-002, 1.701681e-003, -4.092473e-002, -7.382870e-002, -7.621807e-002, -5.061700e-002, -1.335746e-002, 1.104833e-002, 1.948693e-002, 2.679758e-002, 1.197070e-003, 1.081857e-002, 3.516700e-002, 1.107587e-002, 1.533357e-002, 1.797861e-002, -1.676760e-002, -4.343482e-002, -2.193935e-002, -3.041291e-003, -5.510390e-003, -1.219628e-002, 1.635055e-003, 6.722354e-003, -1.537025e-002, -9.335536e-003, 3.731046e-002, 2.340194e-002, -2.815188e-002, -3.731982e-002, -3.154168e-002, -2.191996e-002, -1.031471e-002, 3.021588e-003, 1.482220e-002, 1.847791e-002, 8.390670e-003, -1.695145e-002, -4.654464e-002, -5.867170e-002, -4.479066e-002, -2.675758e-002, -1.611023e-002, 7.060012e-003, 1.886640e-002, 1.845442e-002, 1.130196e-002, -3.142254e-003, -2.284090e-002, -3.770909e-002, -4.557191e-002, -3.916489e-002, -5.727159e-003, 1.643380e-002, 8.328061e-003, 1.248993e-002, -1.125565e-002, 2.002296e-003, 2.614729e-002, -6.182070e-003, -1.454156e-003, -1.631671e-003, -2.162039e-002, -1.567174e-002, -3.615616e-002, -1.755459e-002, -1.392752e-002, -1.772774e-002, -1.390871e-002, -6.983474e-003, -1.766030e-002, 6.562429e-003, 5.487801e-002,

© ISO/IEC 2004 — All rights reserved


Copyright International Organization for Standardization
Provided by IHS under license with ISO
No reproduction or networking permitted without license from IHS
Not for Resale

3.251458e-002, -6.799372e-003, -2.401139e-004, 8.429264e-003, 1.889115e-002, 2.439757e-002, 2.423864e-002, 1.131505e-002, -9.880051e-003, -2.058993e-002, -1.939694e-002, -2.367034e-002, -2.314944e-002, -1.148340e-002, -3.474623e-003, -7.997688e-003, -4.411170e-003, 1.079584e-002, 3.074479e-002, 4.437843e-002, 4.073004e-002, 2.657069e-002, 1.180714e-002, -6.814715e-003, -1.362784e-002, 7.214906e-003, 2.241773e-002, -1.395972e-003, -1.357080e-003, -2.147873e-002, -1.631974e-002, 6.315289e-003, -2.488841e-002, -1.965179e-002, -1.723774e-002, -2.682432e-002, -4.166698e-003, -3.764833e-002, -3.713168e-002, -2.327510e-002, -2.169268e-002, -1.593290e-002, -8.756045e-003, -1.002856e-002, -6.502142e-003, 1.283434e-002, 4.243298e-003, -8.742774e-003, 9.838401e-003, 1.914325e-002, 2.466302e-002, 2.852114e-002, 2.346516e-002, 6.391864e-003, -7.656199e-003, -2.520448e-002, -1.358760e-002, 1.323977e-002, 2.749557e-002, 3.991691e-002, 2.499809e-002, -2.922754e-003, -2.181245e-004, 2.582410e-002, 4.537577e-002, 4.360637e-002, 3.176095e-002, 1.641043e-002, 3.595339e-003, -8.737691e-004, 5.763766e-003, 1.510762e-002, 1.568963e-002, -1.248838e-002, -1.291715e-002, -2.162954e-002, -2.668133e-002, 3.867126e-003, -1.573343e-002, -2.656457e-002, -1.474565e-002, -2.836098e-003, 5.353739e-003, -2.819354e-002, -2.747591e-002, -9.632480e-003, -6.119538e-003, -1.153979e-002, -1.217433e-002, -9.827025e-003, -2.035988e-002, -2.042629e-002, -2.333494e-002, -2.793895e-002, 6.405633e-004, 7.936235e-003, 5.270830e-003, 4.784278e-003, 2.008785e-003, -1.521030e-002, -2.558015e-002, -2.722591e-002, -1.603861e-002, 2.743947e-002, 3.846753e-002, 4.834853e-002, 2.953400e-002, -1.827073e-002, -2.054785e-002, -3.148794e-003, -3.935700e-003, -2.621614e-002, -2.242633e-002, -7.655366e-003, -1.200314e-002, -2.470573e-002, -9.269005e-003, 8.892496e-003, 1.369054e-002, -5.491073e-003, -1.099672e-003, 3.899170e-003, -9.358454e-003, 2.726885e-002, 1.850762e-002, -1.275027e-002, -2.314233e-003, 1.911874e-002, -2.191530e-002, -1.502088e-002, -6.230701e-003, 2.090706e-002, 1.424433e-002, 9.216381e-003, -9.551997e-005, 4.644286e-004, -1.353551e-002, -3.377909e-002, -2.825867e-002, -4.013088e-003, 3.126585e-002, 6.493688e-003, -1.925822e-002, -2.411996e-003, 1.249947e-002, -9.966690e-003, -1.463025e-002, -1.474433e-002, -1.668119e-002, 6.588779e-003, 2.279649e-002, 2.957102e-002, 2.084193e-002, -3.076768e-002, -3.470462e-002, -1.350170e-002, -1.183069e-002, -4.007674e-002, -3.363212e-002, 1.058324e-002, 2.088718e-002, 1.852584e-002, 1.721002e-002, 1.156484e-002, 1.094359e-002, -1.884417e-002, -1.137123e-002, 1.600749e-002, -1.148038e-002, 2.992668e-002, 2.252357e-002, -8.664665e-003, 5.044790e-003, 2.711886e-002, -8.214335e-003, -1.420560e-003, 1.029672e-002, 4.031678e-002, 2.199224e-002, 1.326183e-002, 3.625246e-003, 1.796343e-003, -8.725855e-003, -3.436780e-002, -1.685469e-002, 1.167049e-002, 3.629710e-002, 3.974318e-002, 3.795026e-002, 3.543344e-002, 2.779725e-002, 1.457511e-002, 5.271542e-003, -9.007396e-004, -1.740856e-002, -1.090979e-002, 1.264022e-002, 1.447979e-002, 1.293978e-002, -2.310594e-002, -3.812438e-002, -1.207083e-002, 8.067961e-004, 1.278206e-002, 3.002768e-002, 4.898335e-002, 4.623482e-002, 3.635967e-002, 2.793240e-002, 2.336615e-002, 6.272700e-003, -3.242284e-002, -2.576498e-002, 2.994761e-002, -9.513119e-003, 2.786668e-002, 7.989556e-003, -1.699947e-002, 1.881275e-004, 2.154923e-002, 4.959566e-004, 9.499549e-003, 1.920827e-002, 3.345646e-002, 1.131507e-002, 4.689652e-003, -1.781294e-004, 8.808319e-005, 4.892863e-004, -1.637721e-002, -1.047569e-002, 5.590352e-003, 1.292712e-002, 1.453514e-002, 1.755586e-002, 1.665518e-002, 1.391670e-002, 1.081460e-002, 7.056387e-003, -5.276410e-003, -1.100089e-002, 1.165656e-003, 2.102423e-002, 1.911622e-002, 2.222979e-002, 6.474499e-004, -3.691678e-002, -1.879665e-002, -8.301164e-003, 5.339608e-003, 1.850773e-002, 2.748625e-002, 2.669324e-002, 6.664780e-003, 6.926063e-003, 2.117772e-002, 1.172229e-002, -2.423013e-002, -2.766383e-002, 2.939152e-002, -5.465831e-003, 1.651861e-002, -1.529263e-002, -2.972613e-002, -4.505366e-003, 1.877299e-002, 4.542893e-004, 1.809285e-002, 2.337036e-002, 2.438336e-002, 4.761369e-003, 6.662225e-003, 4.034831e-003, -3.588867e-003, 8.367191e-003, 2.413399e-003, -7.319646e-003, 6.799348e-004, 4.528139e-004, -1.137855e-003, -9.353659e-004, -7.496194e-004, -3.199123e-003, -1.241637e-002, -1.980042e-002, -9.244339e-003, 6.335026e-003, 2.687673e-002, 3.257515e-002, 2.293709e-002, 2.921128e-002, 2.724933e-002, -1.727151e-002, -3.356060e-002, -2.475695e-002, -1.579338e-002, -1.944390e-003, 2.736112e-003, 3.636090e-005, -1.188734e-002, -1.208373e-002, 9.454780e-003, 1.216915e-002, -1.778175e-002, -2.248414e-002, 1.956113e-002, -1.537140e-002, -6.641633e-004, -2.503662e-002, -3.353505e-002, -2.825843e-003, 1.516330e-002, 1.235466e-003, 1.702836e-002, 1.412637e-002, 1.065052e-002, 3.160237e-003, 1.975231e-002, 2.919728e-003, -1.091278e-002, 1.058388e-002, 1.405967e-002, 3.124548e-003, -6.668741e-004, -9.205021e-004, -1.079796e-002, -1.230346e-002, -1.643662e-002, -2.628663e-002, -3.986399e-002, -3.191575e-002, 1.110509e-003, 3.442622e-002, 4.371742e-002, 3.472599e-002, 2.397222e-002, 2.454167e-002, 3.764640e-002, 1.078976e-002, -3.051445e-002, -4.029276e-002, -3.304994e-002, -1.956822e-002, -1.227429e-002, -1.348547e-002, -2.271354e-002, -2.163180e-002, 1.920428e-003, 1.235882e-002, -6.240716e-003, -1.368686e-002, 1.389222e-002, -3.062712e-002, -1.569657e-002, -1.582085e-002, -1.798872e-002, 3.544290e-003, -1.319213e-002, -1.263051e-003, 9.139048e-003, -9.781740e-003, -1.014386e-002, -5.957203e-003, 2.460285e-002, 2.317943e-003, -1.366841e-002, 4.833741e-003, 1.463199e-002, 8.221471e-003, 4.125171e-003, 2.277086e-004, -1.606789e-002, -2.504129e-002, -3.448507e-002, -4.360963e-002, -4.480541e-002, -1.116506e-002, 3.178589e-002, 4.743207e-002, 2.540930e-002, 1.454155e-002, 8.676229e-003, 3.039657e-003, 1.972626e-002,


© ISO/IEC 2004 — All rights reserved
--`,,```,,,,````-`-`,,`,,`,`,,`---

Copyright International Organization for Standardization
Provided by IHS under license with ISO
No reproduction or networking permitted without license from IHS
Not for Resale

3.215935e-002, -3.501913e-003, -2.757243e-002, -2.921917e-002, -2.216123e-002, -1.715218e-002, -1.724278e-002, -1.983573e-002, -1.607817e-002, 5.874575e-003, 1.542026e-002, 1.680528e-003, -5.617925e-003, 1.377082e-002, -2.204271e-002, -1.599753e-002, -7.485839e-004, -2.797471e-003, 1.703365e-002, -1.690409e-002, -1.923346e-003, 9.185091e-003, -1.704080e-002, -1.929203e-002, -1.686133e-002, 1.177391e-002, -2.409427e-003, -1.797450e-002, -5.396878e-003, 6.437125e-003, 1.034701e-002, 1.179943e-002, 7.970874e-003, -5.832107e-003, -1.373722e-002, -1.980487e-002, -1.764963e-002, -2.235823e-003, 2.564309e-002, 4.387756e-002, 1.612116e-002, -2.037878e-002, -2.524205e-002, -2.358440e-002, -2.845586e-002, -2.401360e-002, 6.681288e-003, 2.151884e-002, 1.347679e-002, -2.136696e-003, -4.104634e-003, -2.852748e-003, -1.802684e-003, -4.884973e-003, -1.905252e-003, 1.036782e-002, 2.034697e-002, 3.592959e-003, 1.860394e-003, 1.479158e-002, -9.944703e-003, -1.014738e-002, 6.729690e-003, 8.037773e-003, 2.657362e-002, -1.758639e-002, -7.131693e-003, -2.479797e-004, -2.472860e-002, -2.278490e-002, -3.036877e-002, -1.865962e-002, -2.285958e-002, -2.413503e-002, -1.316994e-002, 1.803012e-003, 4.214987e-003, 1.070406e-002, 1.868252e-002, 1.763960e-002, 1.674515e-002, 1.898653e-002, 2.293339e-002, 2.764933e-002, 3.853590e-002, 3.375201e-002, -1.550320e-002, -4.031061e-002, -3.049186e-002, -2.755502e-002, -2.721811e-002, -2.747380e-002, -7.681565e-003, 1.171683e-002, 2.658731e-002, 2.914671e-002, 3.005208e-002, 2.701123e-002, 2.103282e-002, 7.511981e-003, 3.543569e-003, 1.468286e-002, 1.641745e-002, 4.344262e-003, 7.955054e-003, 1.436819e-002, 6.519006e-004, -2.105904e-003, 8.452884e-003, 1.183100e-002, 2.504244e-002, -3.084144e-002, -1.847951e-002, -1.923260e-002, -4.404775e-002, -2.544356e-002, -3.818572e-002, -4.684594e-002, -4.364696e-002, -3.199655e-002, -1.860333e-002, -7.330580e-003, 1.450192e-003, 5.817078e-003, 9.739040e-003, 1.506845e-002, 1.940201e-002, 2.459353e-002, 2.886590e-002, 2.663401e-002, 3.221744e-002, 1.985085e-002, 1.743085e-003, 1.892805e-003, 8.266364e-003, 3.925474e-003, 1.168425e-002, 2.303899e-002, 1.227691e-002, 6.485966e-003, 8.191019e-003, 2.352266e-002, 3.350872e-002, 3.221533e-002, 1.921444e-002, 3.141207e-003, 1.725767e-003, 9.287151e-003, 7.467222e-003, 4.197294e-003, 1.365326e-002, 9.238160e-003, 2.145949e-003, 5.168031e-003, 6.696583e-003, 7.528544e-003, 9.936352e-003, -4.172503e-002, -2.537466e-002, -2.417760e-002, -4.120387e-002, -1.792513e-002, -2.764869e-002, -5.638363e-002, -5.874595e-002, -3.296183e-002, -1.567456e-002, -1.114046e-002, -1.108302e-002, -1.061009e-002, -8.561371e-003, -4.984293e-003, -2.093565e-003, 3.625379e-003, 1.229539e-002, 1.635227e-002, 1.433891e-002, 3.634853e-004, -9.007024e-003, 9.878103e-004, -1.634248e-004, -5.654231e-003, 3.625846e-003, 2.015146e-002, 1.395195e-002, 5.881014e-003, -1.194893e-003, 1.183632e-003, 4.616244e-003, 9.217519e-003, -1.716212e-003, -9.597050e-003, -6.631577e-003, 9.847861e-004, -2.747444e-003, 4.594075e-003, 1.336748e-002, 2.910196e-003, -5.175519e-003, 3.043654e-003, 3.000081e-004, -5.994746e-003, -3.785138e-003, -5.117742e-002, -2.064796e-002, -1.638327e-002, -2.516251e-002, -1.673535e-003, -1.983682e-003, -3.083380e-002, -4.469013e-002, -2.560592e-002, -6.367911e-003, -1.187332e-002, -1.676479e-002, -2.002211e-002, -2.031269e-002, -1.858040e-002, -1.339670e-002, -4.949376e-003, 7.996406e-003, 1.674607e-002, 9.666780e-003, -5.580736e-003, -2.512064e-002, -3.105138e-002, -3.311116e-002, -2.930270e-002, -2.452294e-002, -2.283506e-002, -9.444705e-003, 3.213272e-003, 7.086574e-003, 3.222191e-003, -7.054722e-003, -9.991224e-003, -1.978183e-002, -2.373897e-002, -1.792461e-002, -1.154584e-002, -9.659872e-003, 7.826203e-003, 1.191140e-002, -3.998598e-003, 3.228994e-003, 1.389801e-002, 4.454613e-005, -1.257146e-002, -1.208489e-002, -4.859371e-002, -2.949673e-003, 5.726151e-003, -3.202590e-003, 1.448339e-002, 2.906918e-002, 1.341279e-002, 4.285444e-003, 1.304204e-002, 1.305234e-002, -4.189409e-003, -1.735948e-002, -2.451352e-002, -2.957197e-002, -2.152855e-002, -1.575121e-002, -7.931688e-003, 6.254326e-003, 1.268261e-002, 1.816688e-002, 2.559673e-002, 1.981401e-002, 3.441983e-003, -1.961197e-002, -2.915675e-002, -1.576727e-002, 8.701803e-004, 8.084524e-003, 7.659856e-003, 9.114399e-003, 7.242844e-003, -2.510145e-003, -1.705988e-002, -2.567200e-002, -2.702972e-002, -2.225991e-002, -2.113225e-002, -1.346090e-002, 1.412504e-002, 7.603511e-003, -3.447231e-003, 1.142453e-002, 1.610744e-002, 5.457493e-003, -9.528049e-004, -4.614639e-003, -3.354155e-002, 1.296332e-002, 2.866082e-002, 2.139061e-002, 3.361922e-002, 4.417197e-002, 4.977808e-002, 4.580983e-002, 4.642717e-002, 2.476704e-002, 7.396354e-003, -1.258633e-002, -2.103213e-002, -2.780780e-002, -1.806332e-002, -1.395137e-002, -5.267263e-003, -1.035062e-004, -9.047674e-004, 1.481659e-002, 3.157436e-002, 3.268678e-002, 2.136190e-002, 7.409101e-003, -7.166875e-003, -9.555370e-003, -5.646690e-003, 3.223013e-003, 5.839292e-003, 6.342130e-003, 2.195785e-003, 3.675324e-004, -1.614658e-002, -2.139714e-002, -2.094323e-002, -2.240089e-002, -2.645665e-002, -1.019844e-002, 1.748849e-002, 9.497899e-003, 5.538487e-003, 1.176866e-002, 1.570656e-003, 6.497312e-003, 1.355397e-002, 1.116810e-002, -5.404289e-003, 2.607821e-002, 3.376910e-002, 3.009039e-002, 3.514949e-002, 3.363363e-002, 2.509997e-002, 2.910803e-002, 4.786829e-002, 2.942826e-002, 1.932308e-002, -6.023749e-003, -1.171357e-002, -1.649115e-002, -8.092551e-003, -5.870001e-003, -9.691851e-003, -1.360973e-002, -1.342495e-002, 4.490309e-003, 1.717956e-002, 1.880820e-002, 2.086583e-002, 1.771236e-002, 4.130208e-003, -1.009113e-002, -1.386182e-002, -1.009102e-002, -8.991144e-003, -1.099303e-002, -1.056989e-002, -3.537455e-003, -1.067482e-002, -9.103928e-003, -8.068562e-003, -1.587886e-002, -2.320628e-002, -4.093362e-003, 1.592828e-002, 5.029055e-003, -5.490955e-004, -1.611416e-002, -2.458734e-002,

© ISO/IEC 2004 — All rights reserved


--`,,```,,,,````-`-`,,`,,`,`,,`---

Copyright International Organization for Standardization
Provided by IHS under license with ISO
No reproduction or networking permitted without license from IHS
Not for Resale

3.212506e-003, 1.634794e-002, 2.794289e-002, 1.589556e-002, 2.384255e-002, -1.194429e-002, 1.668748e-002, 2.671659e-002, 2.677183e-002, 3.946909e-003, 3.658578e-003, 3.091982e-002, 2.955511e-002, 2.098931e-002, 1.672072e-003, -1.146110e-003, 5.515768e-004, 4.909830e-003, 3.867447e-003, -1.292244e-002, -1.874102e-002, -1.523141e-002, -6.563172e-003, -3.049056e-003, 3.922515e-003, 1.241436e-002, 1.533136e-002, 9.799060e-003, 3.108074e-004, -6.086960e-003, -5.210405e-003, -1.082667e-002, -2.338839e-002, -2.368324e-002, -7.497754e-003, -2.479713e-003, 3.190507e-003, 1.152077e-003, -9.507687e-003, -1.467507e-002, 1.059001e-003, 1.474609e-002, -2.556278e-003, -7.083251e-003, -3.900974e-002, -3.778433e-002, -7.871176e-003, 7.167155e-003, 2.867520e-002, 2.094904e-002, 2.368068e-002, -2.276733e-002, -1.260124e-003, 1.411271e-002, 2.698289e-002, 1.483186e-002, 9.415596e-003, 2.606767e-002, 2.163134e-002, 1.595861e-002, 7.150608e-003, 4.929466e-003, 1.447653e-002, 1.917494e-002, 2.128900e-002, 5.860219e-003, -8.918711e-004, 8.860521e-003, 1.736802e-002, 1.906516e-002, 6.271688e-003, -5.701360e-003, -9.538365e-003, -8.683731e-003, -1.834631e-002, -1.275418e-002, -3.269907e-003, 3.447127e-003, 1.577590e-003, -3.783012e-003, 1.200160e-003, 9.993420e-003, 1.353953e-002, 5.906845e-003, -7.580718e-003, -1.029225e-002, 5.316036e-003, 8.330925e-003, -5.487538e-003, 3.658382e-003, -2.270722e-002, -2.697328e-002, -1.954408e-002, -3.609058e-003, 3.137843e-003, 1.547299e-002, 1.893431e-002, -3.268222e-002, -1.553100e-002, -4.862190e-003, 2.193743e-002, 2.798417e-002, 1.182609e-002, 2.779204e-002, 1.485258e-002, 1.561728e-003, 7.353443e-003, 1.018845e-002, 1.863356e-002, 2.686889e-002, 3.345348e-002, 2.482978e-002, 1.635430e-002, 2.661088e-002, 3.449262e-002, 2.894334e-002, 4.144800e-003, -2.303336e-002, -3.115374e-002, -2.966012e-002, -3.349255e-002, -1.626366e-002, 8.028911e-003, 3.147160e-002, 3.825311e-002, 2.974654e-002, 2.331870e-002, 2.784261e-002, 2.328443e-002, 6.288506e-003, -8.373241e-003, -1.175633e-002, 1.216613e-002, 6.824306e-003, 7.044945e-003, 1.098414e-002, -3.157796e-003, -1.310089e-002, -2.229976e-002, -3.115419e-003, 5.678831e-003, 1.267912e-002, 1.452704e-002, -3.481713e-002, -2.429496e-002, -1.823922e-002, 5.264810e-003, 2.007120e-002, 8.211173e-003, 2.593682e-002, 1.218923e-002, -1.244982e-002, -1.286353e-003, 1.211427e-002, 1.981041e-002, 2.553416e-002, 3.024844e-002, 2.241359e-002, 1.088107e-002, 8.183574e-003, 1.721430e-002, 1.950126e-002, 1.076648e-003, -2.522846e-002, -3.831307e-002, -4.192091e-002, -3.687911e-002, -1.691781e-002, 1.121731e-002, 3.298262e-002, 3.288991e-002, 2.276522e-002, 2.512873e-002, 3.328779e-002, 2.820369e-002, 8.576269e-003, -1.063338e-002, -8.699036e-003, 1.220109e-002, 5.456525e-003, 2.425635e-002, 1.741678e-002, 1.513483e-002, -9.343093e-003, -2.143169e-002, -6.869862e-003, -1.411976e-003, 1.099144e-002, 8.651416e-003, -2.893090e-002, -1.900588e-002, -2.489026e-002, -1.494107e-002, 2.212767e-004, 4.563968e-003, 1.827470e-002, 1.095837e-002, -2.566515e-002, -1.609125e-002, 1.081826e-002, 1.537560e-002, 2.185708e-002, 2.624772e-002, 1.616077e-002, -6.781094e-003, -1.427960e-002, -8.965720e-003, -5.494756e-003, -1.225700e-002, -2.291065e-002, -2.858607e-002, -2.876912e-002, -1.762804e-002, -3.345163e-004, 2.126457e-002, 3.227420e-002, 2.207124e-002, 9.752111e-003, 1.436010e-002, 2.840053e-002, 2.422816e-002, 8.135164e-003, -1.402816e-002, -3.375119e-003, 4.719967e-003, 1.225047e-002, 3.061459e-002, 2.651662e-002, 2.340601e-002, -1.263160e-002, -2.013146e-002, 7.254299e-004, -4.393546e-003, 1.068266e-002, -3.533370e-003, -2.546410e-002, 6.250527e-004, -9.961375e-003, -2.506097e-002, -2.089992e-002, -2.959658e-003, 1.542505e-002, 3.783486e-003, -4.222890e-002, -3.414773e-002, -2.958456e-003, 6.528736e-003, 1.291295e-002, 1.524961e-002, 4.126910e-003, -9.554702e-003, -2.123785e-002, -2.691887e-002, -3.123773e-002, -3.440237e-002, -3.632056e-002, -3.508019e-002, -2.981694e-002, -1.569058e-002, 4.522084e-003, 2.070177e-002, 2.047272e-002, 1.077976e-002, 1.723517e-005, 8.710073e-003, 1.858757e-002, 2.034112e-002, 5.008309e-003, -9.231290e-003, -4.859855e-003, -6.532677e-003, 9.449985e-003, 1.487254e-002, 2.589430e-002, 2.204812e-002, -1.618801e-002, -1.794877e-002, 8.049272e-003, -2.458012e-003, 1.017964e-002, -6.739066e-003, -2.525725e-002, 2.211044e-002, 1.620162e-003, -2.799151e-002, -3.444559e-002, -8.559569e-003, 1.188700e-002, -5.146408e-003, -4.943495e-002, -4.713438e-002, -1.093677e-002, 2.487263e-003, -3.308395e-003, -2.582844e-003, -9.205815e-003, -1.029993e-002, -1.314341e-002, -1.749772e-002, -1.984505e-002, -2.186255e-002, -2.182375e-002, -1.708143e-002, -5.845371e-003, 5.823704e-003, 1.447042e-002, 1.890508e-002, 7.501684e-003, -9.921264e-003, -1.891912e-002, -3.782383e-003, 1.324558e-002, 1.581949e-002, -3.430700e-004, -1.043696e-002, -1.729607e-002, -1.638671e-002, -5.029151e-003, -4.612916e-003, 1.990618e-002, 1.981961e-002, -1.144488e-002, -5.861889e-003, 1.481137e-002, -4.798554e-003, -2.460421e-004, -8.506481e-004, -6.124102e-003, 4.252321e-002, 1.636014e-002, -8.666972e-003, -1.498368e-002, -1.757145e-003, 4.741399e-003, -9.388720e-003, -5.151599e-002, -3.445948e-002, -5.242613e-003, 5.960174e-003, -1.595235e-002, -2.530044e-002, -2.001881e-002, -8.747967e-003, -3.809534e-003, -7.811025e-003, -7.035168e-003, -6.985512e-003, 3.698844e-003, 1.460840e-002, 2.279671e-002, 2.472206e-002, 2.552934e-002, 1.414284e-002, -5.978967e-003, -2.268282e-002, -2.582804e-002, -8.078145e-003, 1.124480e-002, 9.552227e-003, -5.885551e-003, -3.103356e-002, -2.650062e-002, -1.968734e-002, -2.644407e-002, -6.924100e-003, 2.196134e-002, 2.568115e-002, 2.585810e-003, -2.246550e-003, 1.495778e-002, -7.044707e-003, -7.443822e-003, 7.317325e-003, 2.820056e-003, 4.425360e-002, 2.583827e-002, 1.410983e-002, 4.136041e-003, -2.519611e-003, -7.522428e-003, -2.248537e-002, -3.876856e-002, 2.816771e-003, 1.067557e-002,


© ISO/IEC 2004 — All rights reserved

Copyright International Organization for Standardization
Provided by IHS under license with ISO
No reproduction or networking permitted without license from IHS
Not for Resale

1.149383e-002, -1.769701e-002, -3.782726e-002, -3.324383e-002, -9.211980e-003, 3.778358e-003, 8.573719e-004, -2.509507e-003, -3.051175e-003, 6.613749e-003, 1.514933e-002, 2.146930e-002, 2.472087e-002, 2.172258e-002, 5.947086e-003, -1.103818e-002, -2.051996e-002, -1.460081e-002, 1.799236e-003, 1.463414e-002, 1.133773e-002, -1.877363e-002, -5.263549e-002, -2.338991e-002, -1.898883e-002, -3.975138e-002, -1.750385e-002, 1.041323e-002, 2.681213e-002, 1.747634e-002, 1.525081e-003, 1.062999e-002, -7.691466e-003, -4.671605e-003, 7.440596e-003, 1.266850e-003, 3.623118e-002, 1.997031e-002, 1.012662e-002, 5.980925e-003, 4.943975e-003, -4.088546e-003, -1.584070e-002, -2.744953e-002, 2.415401e-002, 1.963017e-002, 1.436424e-002, 2.931178e-003, -2.037624e-002, -2.580747e-002, -4.411510e-003, 9.676680e-003, 9.169008e-003, -2.125407e-003, -9.554955e-003, -1.277175e-002, -1.343975e-002, -9.137096e-003, -2.749740e-003, 3.137213e-004, -6.884208e-003, -1.518304e-002, -1.445894e-002, -3.273504e-003, 1.165276e-002, 2.042979e-002, 1.638839e-002, -1.954943e-002, -4.410431e-002, -1.100249e-002, -6.860659e-003, -3.855265e-002, -3.691714e-002, -1.352454e-002, 1.602518e-002, 2.155911e-002, 1.054531e-002, 1.127208e-002, -4.345713e-003, -3.362884e-004, 1.000053e-002, -1.369825e-002, 1.926379e-002, 7.513299e-003, 1.663287e-003, -1.378552e-003, 7.390586e-005, -1.036656e-002, -8.861762e-003, -2.163989e-002, 2.983043e-002, 2.801311e-002, 1.962224e-002, 2.178221e-002, 4.078039e-003, -7.678465e-003, 9.377288e-003, 1.989342e-002, 2.275201e-002, 5.701113e-003, -1.037755e-002, -2.127145e-002, -2.849794e-002, -2.460831e-002, -1.859878e-002, -1.120132e-002, -8.976198e-003, -1.067310e-002, 4.002394e-004, 1.090545e-002, 2.071371e-002, 2.113225e-002, 1.601565e-002, -8.378292e-004, -9.515600e-003, 1.319399e-002, 2.126343e-003, -2.761923e-002, -2.783331e-002, -2.752817e-002, 7.125581e-004, -2.355848e-003, 1.997866e-003, 2.115593e-002, 3.136223e-003, 5.948528e-003, 1.355772e-003, -2.852677e-002, 1.008585e-002, 3.570090e-003, -1.006602e-002, -1.888786e-002, -1.694780e-002, -9.365826e-003, -1.447059e-002, -2.776780e-002, 2.079446e-002, 1.314505e-002, 1.171667e-002, 2.781217e-002, 1.125774e-002, 3.113700e-003, 1.331220e-002, 2.561846e-002, 3.516194e-002, 2.203470e-002, -1.160666e-003, -1.553053e-002, -2.200456e-002, -1.672329e-002, -7.301365e-003, 4.748711e-003, 7.018900e-003, 5.748293e-003, 8.484758e-003, 8.419328e-003, 5.646861e-003, 8.909935e-003, 1.403256e-002, 1.408939e-002, 1.227912e-002, 2.671640e-002, 2.873353e-003, -1.910886e-002, -2.124837e-003, -9.615295e-003, -1.538281e-003, -1.537001e-002, -2.586349e-002, -1.869371e-003, -1.997400e-003, 7.406902e-003, -5.282778e-003, -2.683620e-002, 2.058782e-002, 1.058505e-002, -2.607580e-003, -1.742823e-002, -1.386260e-002, 3.492501e-004, -1.993714e-003, -1.568404e-002, 1.279666e-002, -5.849385e-003, -4.447067e-004, 1.624449e-002, 1.185862e-002, 9.637309e-003, 1.066717e-002, 2.051063e-002, 3.364002e-002, 2.921344e-002, 1.684080e-002, 2.655847e-004, -6.663488e-003, -1.934650e-003, 6.890540e-003, 1.681803e-002, 2.235399e-002, 1.999500e-002, -5.237095e-003, -1.590769e-002, -2.619435e-002, -1.524005e-002, -5.846207e-004, -6.045540e-003, -1.684759e-003, 1.795666e-002, -2.176486e-003, -2.545951e-002, 8.184504e-004, 5.870602e-003, 5.243740e-003, -6.532634e-003, -3.051280e-002, -2.529776e-002, -2.440356e-002, -7.455334e-003, 3.837029e-003, -1.163076e-002, -1.251858e-002, 2.023373e-002, 6.598178e-003, -1.640173e-002, -1.558491e-002, -2.031350e-003, 7.330108e-004, -1.008348e-002, -1.113996e-002, -3.214975e-002, -1.856625e-002, -9.279783e-003, -4.212779e-003, -5.120278e-003, -8.274085e-003, -1.231032e-002, -9.798664e-003, -1.221678e-002, -1.816100e-002, -2.805394e-002, -3.272845e-002, -2.528143e-002, -1.502479e-002, -4.506565e-003, 1.744801e-003, -1.139288e-003, -1.407161e-002, -2.526069e-002, -2.950242e-002, -1.958349e-002, -1.959706e-003, -6.479959e-003, -4.712491e-003, 2.703843e-003, 1.203669e-004, -8.799120e-003, -3.322322e-003, -6.222652e-004, 1.407153e-002, 1.705643e-002, -1.006952e-002, -3.405808e-002, -1.830996e-002, -4.237834e-003, 2.474801e-002, 2.060136e-003, -1.208951e-002, 1.772286e-002, 6.268752e-003, -6.877559e-003, -6.498689e-003, 1.089109e-002, 2.090954e-002, 1.801226e-002, -2.812545e-004, -3.095008e-002, -2.215096e-002, -1.032552e-002, -2.913565e-003, 3.862820e-003, -4.851796e-004, -5.772043e-003, -1.600137e-002, -2.219767e-002, -2.280884e-002, -2.526806e-002, -2.644443e-002, -1.822556e-002, -6.645005e-003, 7.535006e-004, 2.059250e-003, -2.149836e-003, -1.114408e-002, -1.758977e-002, -1.000455e-002, -1.233152e-003, -4.895918e-005, -8.365351e-003, -8.776638e-003, 1.107193e-003, 3.387347e-003, 1.217877e-002, -5.204687e-003, -1.792406e-002, -9.982599e-003, 9.318642e-003, 3.076517e-003, -1.115445e-002, 8.115259e-004, 1.415904e-002, 3.374229e-002, -4.682062e-003, -3.701063e-002, 5.747581e-003, 1.700769e-002, 2.741858e-002, 2.267732e-002, 2.861989e-002, 3.464101e-002, 3.824370e-002, 1.408989e-002, -1.493599e-002, -9.037200e-003, 3.078422e-003, 2.153210e-002, 2.131166e-002, 1.753075e-002, 8.684119e-003, -8.842342e-004, -7.618061e-003, -1.146866e-002, -1.134296e-002, -9.110342e-003, 8.810243e-004, 8.759375e-003, 1.369320e-002, 1.484914e-002, 1.397061e-002, 9.049897e-003, 7.046768e-003, 1.689050e-002, 1.919147e-002, 1.353757e-002, -6.345383e-003, 3.999165e-003, 4.578649e-003, 1.144770e-002, 3.010175e-002, 1.867234e-002, -8.189595e-003, -2.076647e-002, -1.090539e-002, -4.167089e-004, 7.066602e-004, 1.836308e-002, 2.969126e-002, 1.380717e-002, -1.927529e-002, -4.215971e-002, -2.952240e-002, -1.953162e-002, -6.586181e-003, -1.233247e-002, -3.956062e-002, -2.240915e-002, 3.409453e-004, -6.031508e-003, -2.029310e-002, -1.743340e-002, -5.546656e-003, 1.103530e-002, 2.311448e-002, 2.147538e-002, 1.310857e-002, 5.361291e-004, -7.456896e-003, -9.892258e-003, -6.792816e-003, -5.076516e-003, 2.480992e-004, 2.636816e-003, 9.070984e-003, 1.770983e-002, 1.944268e-002,

© ISO/IEC 2004 — All rights reserved


Copyright International Organization for Standardization
Provided by IHS under license with ISO
No reproduction or networking permitted without license from IHS
Not for Resale

1.212746e-002, 1.548490e-002, 1.967672e-002, 1.764563e-002, 8.096391e-003, 2.885277e-003, 6.161565e-003, -3.619652e-003, 6.012704e-003, 2.940430e-002, 3.093191e-002, 1.785041e-002, 1.374695e-002, -4.067752e-004, -5.400466e-003, -1.063587e-003, 1.150742e-002, 1.394119e-002, 3.098857e-002, 1.507763e-002, 8.824546e-003, 9.977118e-003, 2.305521e-002, 3.066112e-002, 1.491473e-002, -1.048808e-002, 9.100286e-003, 2.605927e-002, 2.934938e-002, 2.584858e-002, 1.273109e-002, 2.268680e-002, 3.008778e-002, 3.304929e-002, 2.830259e-002, 1.652348e-002, 1.535986e-003, -1.374827e-002, -2.239870e-002, -2.510770e-002, -2.378428e-002, -2.090217e-002, -1.432095e-002, -5.104981e-003, 1.283269e-003, 6.824488e-003, 7.548245e-003, 1.302937e-002, 6.876820e-003, 4.908033e-004, 3.818638e-004, -1.743752e-002, -3.324095e-002, -4.922097e-002, -3.060897e-002, -1.157730e-002, -4.496903e-003, 1.033852e-002, 3.765132e-002, 2.621269e-002, 1.374197e-002, 2.665685e-002, 3.519605e-002, 2.619557e-002},
{-1.141598e-002, -1.983976e-002, -2.500578e-002, -2.609878e-002, -1.510298e-002, -2.439013e-003, 5.289528e-003, 1.209511e-002, 8.076475e-003, -1.382697e-004, 5.494312e-003, 1.215455e-002, 4.089464e-003, -4.859880e-003, -3.594603e-003, -2.111868e-003, 1.149551e-004, 4.628374e-003, -2.072198e-004, -7.023470e-003, -1.303781e-002, -2.009531e-002, -2.721395e-002, -2.575991e-002, -1.727052e-002, -6.044719e-003, 1.886148e-003, 6.692478e-003, 1.058729e-002, 1.117176e-002, 7.200467e-003, -4.634949e-003, -1.671452e-002, -1.588330e-002, -6.615497e-003, 3.026758e-003, 8.367092e-003, -3.202557e-003, -5.851025e-003, 1.346900e-003, 1.627452e-002, 7.644119e-003, -1.564070e-002, 1.020317e-002, 9.338028e-003, 6.776997e-003, 3.642835e-002, 9.958366e-003, 1.107665e-002, 1.783063e-002, 2.489746e-002, 2.968852e-002, 2.396141e-002, 1.176847e-002, 7.955315e-003, 8.085402e-003, -2.481971e-003, -2.406807e-002, -3.656896e-002, -3.246092e-002, -2.362477e-002, -1.300570e-002, -2.826727e-003, 3.674175e-003, 4.256341e-003, -3.068546e-003, -9.758880e-003, -1.871890e-002, -2.539624e-002, -1.901636e-002, -9.655329e-003, 2.388123e-003, 1.551270e-002, 2.513828e-002, 3.326655e-002, 2.861705e-002, 2.012719e-002, 1.131978e-002, -1.360975e-003, -6.102309e-003, 4.684952e-003, 1.730933e-002, 2.214328e-002, 1.856640e-002, 1.182719e-002, 6.797008e-003, 1.484405e-002, 1.871979e-002, -6.072296e-004, -1.099652e-002, 8.408097e-003, 6.908201e-003, 2.752290e-002, -3.199623e-003, 4.290367e-003, 1.281771e-002, 1.718076e-002, 1.448526e-002, 6.165046e-003, -3.107595e-003, 4.347046e-003, 7.684580e-003, -1.355756e-002, -2.846637e-002, -2.245013e-002, -1.722999e-002, -9.919735e-003, -6.359368e-003, -3.997985e-003, 2.728464e-003, 7.476529e-003, -1.317045e-003, -1.261624e-002, -2.128893e-002, -2.512419e-002, -2.501034e-002, -1.664416e-002, 2.614698e-004, 1.671570e-002, 2.656128e-002, 2.843268e-002, 2.765225e-002, 1.144626e-002, -3.692772e-003, -1.258428e-002, -2.068261e-002, -2.001107e-002, -2.305624e-003, 2.884237e-003, -2.014999e-003, -3.395386e-003, -9.987283e-003, -6.998863e-003, 5.339765e-004, -2.679842e-003, -1.447479e-002, 3.048007e-003, 2.028661e-004, 1.863909e-002, -1.801249e-002, -6.250449e-004, 4.380386e-003, 3.592100e-003, -4.620175e-004, -5.016290e-004, 1.165724e-002, 2.306025e-002, 1.047949e-002, 1.285926e-003, 1.483337e-003, -2.048997e-003, -7.989389e-003, -1.173543e-002, -6.718892e-003, 1.882316e-003, 6.867192e-003, 3.839137e-003, -4.538836e-003, -1.589609e-002, -2.259599e-002, -2.924040e-002, -3.504497e-002, -2.716007e-002, -8.396911e-003, 1.078562e-002, 2.675639e-002, 3.319724e-002, 3.116881e-002, 1.751051e-002, 6.763719e-005, -1.585093e-002, -2.392450e-002, -2.768760e-002, -2.350784e-002, -7.085242e-003, -9.423076e-003, -1.470816e-002, -2.030900e-002, -2.031760e-002, -1.328612e-002, -8.929950e-003, -1.599777e-002, -3.729180e-003, -1.200974e-003, 7.417728e-003, -2.903066e-002, -5.465808e-003, -3.318427e-003, -1.911253e-003, -7.700232e-003, 1.131254e-002, 3.364003e-002, 4.209904e-002, 3.789392e-002, 3.360593e-002, 1.520025e-002, -6.068326e-003, -1.451483e-002, -6.740997e-003, 6.584711e-003, 1.341629e-002, 1.454445e-002, 8.588437e-003, -5.067123e-003, -1.636518e-002, -2.417055e-002, -3.205400e-002, -3.756903e-002, -3.215613e-002, -1.102857e-002, 1.240792e-002, 2.442851e-002, 3.217883e-002, 3.018164e-002, 2.183874e-002, 9.483465e-003, -5.713792e-003, -2.185995e-002, -2.455575e-002, -2.186936e-002, -1.535904e-002, -5.885939e-003, -1.813413e-002, -2.461168e-002, -1.976904e-002, -1.006619e-002, -1.004010e-002, -1.654073e-002, -8.010440e-003, 1.213404e-004, -1.016509e-002, -4.239679e-002, -1.719230e-002, -9.751800e-003, -6.837180e-003, -7.539951e-003, 1.533760e-002, 3.567918e-002, 4.391810e-002, 4.895498e-002, 2.676612e-002, -1.563507e-003, -1.161086e-002, -2.726881e-003, 1.349483e-002, 2.024192e-002, 2.135107e-002, 1.654706e-002, 8.789658e-003, 9.146844e-004, -1.079516e-002, -2.193408e-002, -2.884428e-002, -3.524619e-002, -2.820700e-002, -8.729595e-003, 1.147005e-002, 1.659803e-002, 2.068736e-002, 1.946011e-002, 1.533636e-002, 1.158461e-002, 2.192400e-003, -6.244041e-003, -1.262383e-002, -9.498165e-003, 3.537002e-003, 1.100961e-002, 3.777299e-003, -1.324566e-002, -1.677184e-002, 4.191009e-003, 1.396165e-003, -6.960216e-003, -5.017293e-003, 3.822683e-003, -2.104294e-002, -4.863769e-002, -2.187975e-002, -2.046421e-002, -1.992185e-002, -1.010726e-002, 7.441205e-003, 1.977642e-002, 3.852896e-002, 3.384203e-002, 2.510989e-003, -4.534245e-003, 2.854827e-003, 1.139099e-002, 2.455575e-002, 2.866052e-002, 2.965370e-002, 2.712152e-002, 1.993551e-002, 1.490641e-002, 2.542804e-003, -1.406035e-002, -2.422188e-002, -2.690113e-002, -1.581911e-002, 4.383008e-003, 2.335835e-002, 2.494285e-002, 1.923319e-002, 1.362441e-002, -1.272236e-004, -1.100317e-002, -9.616424e-003, -8.436021e-003, -1.208833e-002, -8.172495e-003, 6.435742e-003, 1.970340e-002, 1.555675e-002, 2.606991e-003, -1.595915e-002, 1.972262e-003, 1.026914e-002, 7.343049e-004, -


© ISO/IEC 2004 — All rights reserved

Copyright International Organization for Standardization
Provided by IHS under license with ISO
No reproduction or networking permitted without license from IHS
Not for Resale

5.153498e-003, 7.318480e-003, -1.931242e-002, -4.668566e-002, -2.463505e-002, -2.560817e-002, -2.020235e-002, -1.328455e-002, -1.192424e-002, 3.053380e-003, 2.183580e-002, 1.405099e-002, -1.183272e-003, 7.260005e-003, 1.230402e-002, 2.223882e-002, 3.458347e-002, 3.898629e-002, 4.064150e-002, 3.590103e-002, 2.475429e-002, 1.241474e-002, -4.406549e-003, -2.558441e-002, -3.153771e-002, -2.120621e-002, 2.234335e-003, 2.654364e-002, 4.532919e-002, 4.638083e-002, 3.196860e-002, 1.549066e-002, -3.999349e-003, -2.382974e-002, -3.407613e-002, -2.764395e-002, -1.371422e-002, -1.074485e-002, 2.632916e-003, 1.847632e-002, 1.492728e-002, 7.147935e-003, 2.744852e-003, -2.864111e-003, 2.327737e-003, 1.825988e-003, -7.671416e-004, 7.049754e-003, -1.181847e-002, -4.060279e-002, -2.242203e-002, -2.426291e-002, -2.032448e-002, -1.893421e-002, -2.772024e-002, -1.243466e-002, 7.210685e-003, 4.120610e-003, 6.219993e-003, 9.507204e-003, 8.895882e-003, 1.794692e-002, 2.886932e-002, 3.380573e-002, 3.604439e-002, 2.797712e-002, 1.003262e-002, -1.233879e-002, -2.964002e-002, -4.695508e-002, -4.905523e-002, -2.846802e-002, 9.084423e-003, 4.483231e-002, 6.359759e-002, 5.844808e-002, 4.182433e-002, 2.049492e-002, -1.956131e-003, -2.748626e-002, -4.497768e-002, -4.108756e-002, -2.987515e-002, -1.190770e-002, -4.261928e-003, 9.127918e-003, 1.652158e-002, 6.754397e-003, 8.401188e-003, 1.254165e-002, 2.636539e-003, -2.201708e-004, -1.850076e-004, 4.500437e-003, -3.301877e-004, -3.119057e-002, -1.988899e-002, -2.727048e-002, -1.737266e-002, -2.700887e-002, -3.548893e-002, -1.578758e-002, 1.298297e-003, 3.936325e-003, 8.336004e-003, 2.345873e-003, -5.452063e-004, 8.019166e-003, 2.109832e-002, 2.321059e-002, 1.923887e-002, 6.151414e-003, -1.249674e-002, -3.604300e-002, -5.622498e-002, -6.455132e-002, -5.859348e-002, -3.079041e-002, 7.804738e-003, 4.873352e-002, 6.818651e-002, 6.671020e-002, 4.615521e-002, 2.744224e-002, 1.226275e-003, -2.668603e-002, -4.211576e-002, -3.999288e-002, -3.586951e-002, -2.116206e-002, -2.366591e-003, 1.591775e-003, 8.068648e-003, -4.200843e-004, 1.883024e-003, 2.008749e-002, 9.536422e-003, 2.242550e-003, 3.636198e-003, 5.320118e-003, 1.173434e-002, -1.567227e-002, -1.544776e-002, -2.587678e-002, -1.380115e-002, -2.806991e-002, -3.483759e-002, -1.726164e-002, -6.893335e-003, -4.621831e-004, -1.095615e-003, -1.026310e-002, -8.243189e-003, 3.453239e-003, 1.168820e-002, 1.729376e-002, 7.894103e-003, -9.097203e-003, -2.706881e-002, -4.911627e-002, -6.868987e-002, -6.810950e-002, -5.700077e-002, -2.666508e-002, 8.140105e-003, 4.364350e-002, 6.736839e-002, 6.423817e-002, 4.680104e-002, 2.925958e-002, 2.584395e-003, -2.224671e-002, -3.006535e-002, -2.445613e-002, -2.123572e-002, -9.088466e-003, 4.444878e-003, 1.349008e-002, 3.618865e-003, -5.642292e-003, -1.111460e-002, 1.376072e-002, 1.395060e-002, -1.277236e-003, 1.160799e-002, 8.774269e-003, 2.463488e-002, -2.312746e-003, -1.541732e-002, -2.156805e-002, -1.613111e-002, -2.070314e-002, -2.999559e-002, -1.669322e-002, -1.356362e-002, -1.038854e-002, -1.225762e-002, -1.684587e-002, -5.780396e-003, 3.364741e-003, 1.219920e-002, 1.595648e-002, 5.094430e-003, -9.411451e-003, -3.024319e-002, -4.922581e-002, -6.385817e-002, -5.913798e-002, -4.918421e-002, -2.138731e-002, 9.348594e-003, 4.023880e-002, 5.738839e-002, 5.812519e-002, 4.441213e-002, 2.554115e-002, 2.851905e-003, -2.397934e-002, -3.219865e-002, -1.991642e-002, -7.149756e-003, 4.618891e-003, 2.097357e-002, 2.864271e-002, 9.705801e-003, -7.150042e-003, -1.127781e-002, 1.017603e-002, 7.323623e-003, -7.434998e-003, 2.310803e-002, 1.465057e-002, 3.905942e-002, 9.307437e-003, -1.536074e-002, -4.097948e-003, -8.899835e-003, -9.174498e-003, -1.690092e-002, -1.402037e-002, -1.746317e-002, -1.167399e-002, -1.106861e-002, -1.417118e-002, -5.376171e-003, 3.807500e-003, 1.251104e-002, 1.560600e-002, 1.271256e-002, 4.287489e-004, -1.897809e-002, -3.021569e-002, -4.203542e-002, -4.171337e-002, -3.451662e-002, -2.040078e-002, 1.000858e-002, 3.041536e-002, 4.112530e-002, 4.634518e-002, 3.548861e-002, 1.795377e-002, -1.997128e-003, -2.627890e-002, -4.112676e-002, -3.121517e-002, -5.134841e-003, 1.738722e-002, 3.063157e-002, 3.018238e-002, 1.405332e-002, -2.673911e-003, -6.077126e-003, 1.533667e-002, 7.625491e-003, -1.204325e-002, 2.808455e-002, 2.118757e-002, 4.723152e-002, 1.763763e-002, -5.598502e-003, 7.460656e-003, 6.908649e-003, 9.332509e-003, 1.817928e-003, -1.091197e-002, -1.449145e-002, -2.239960e-003, -4.823505e-003, -1.915609e-002, -7.922208e-003, 1.698123e-003, 1.233086e-002, 1.988661e-002, 2.108811e-002, 1.868949e-002, 8.765563e-003, 1.428289e-003, -1.195064e-002, -1.875029e-002, -1.830604e-002, -1.245146e-002, 4.242239e-003, 1.971073e-002, 2.507023e-002, 2.917494e-002, 1.936673e-002, 4.207305e-003, -1.421804e-002, -3.399995e-002, -4.800768e-002, -4.033664e-002, -1.207454e-002, 2.333504e-002, 3.763085e-002, 2.933928e-002, 1.917066e-002, -9.188043e-004, 5.970913e-003, 2.618350e-002, 8.438867e-003, -1.261683e-002, 2.891230e-002, 1.440649e-002, 4.846993e-002, 2.198817e-002, 9.866301e-003, 1.348734e-002, 2.533790e-002, 2.310903e-002, 1.440842e-002, -3.056825e-003, -2.558940e-003, 1.134297e-002, 9.450867e-004, -1.724413e-002, -1.513283e-002, -1.338366e-003, 1.023826e-002, 2.041132e-002, 2.287222e-002, 3.528372e-002, 3.794416e-002, 3.253953e-002, 1.638395e-002, 3.407632e-003, -6.352743e-003, -6.732430e-003, 2.230890e-003, 1.234950e-002, 1.741687e-002, 1.892854e-002, 1.073604e-002, -1.034648e-002, -2.934337e-002, -4.220063e-002, -5.386557e-002, -4.854947e-002, -2.720068e-002, 2.172213e-002, 4.564541e-002, 2.965793e-002, 2.087308e-002, 3.389780e-003, 4.978953e-003, 2.550180e-002, 1.342357e-002, -1.068863e-002, 2.669302e-002, 5.050201e-003, 3.872527e-002, 2.259882e-002, 2.555502e-002, 1.500255e-002, 2.829943e-002, 2.713119e-002, 1.972318e-002, 4.283363e-003, 9.244228e-003, 2.122338e-002, -3.703568e-004, -1.905782e-002, -2.022935e-002, -1.244117e-002, -

© ISO/IEC 2004 — All rights reserved


Copyright International Organization for Standardization
Provided by IHS under license with ISO
No reproduction or networking permitted without license from IHS
Not for Resale

3.296166e-004, 9.274908e-003, 1.568416e-002, 3.615526e-002, 5.303506e-002, 5.439226e-002, 3.845745e-002, 1.960743e-002, 3.734757e-003, -6.074457e-003, -2.685480e-003, 1.015441e-002, 1.616359e-002, 1.372606e-002, 5.059744e-003, -1.411478e-002, -2.911010e-002, -4.247209e-002, -5.655943e-002, -5.791644e-002, -3.817341e-002, 9.671034e-003, 3.906964e-002, 2.179005e-002, 1.890853e-002, 8.716753e-003, 7.575437e-004, 1.362251e-002, 1.634071e-002, -7.424800e-003, 1.564402e-002, 2.017825e-003, 2.044591e-002, 2.255450e-002, 2.494032e-002, 1.454434e-002, 1.962284e-002, 1.954625e-002, 1.983161e-002, 3.681606e-003, 9.613284e-003, 1.379007e-002, -1.118912e-002, -2.330410e-002, -2.559007e-002, -2.725272e-002, -2.420606e-002, -1.697702e-002, -7.401243e-003, 1.658404e-002, 3.905367e-002, 4.764554e-002, 4.148041e-002, 2.447213e-002, 6.609432e-003, -9.141096e-003, -8.925382e-003, 5.361535e-003, 1.553036e-002, 1.020685e-002, -4.739815e-003, -1.798572e-002, -2.529090e-002, -3.140253e-002, -4.202352e-002, -5.168330e-002, -4.031316e-002, -6.853019e-003, 2.082012e-002, 9.263617e-003, 1.377245e-002, 9.933108e-003, -4.409395e-003, -2.547563e-003, 1.257456e-002, -9.412164e-003, 2.845679e-003, -5.115218e-003, 7.741892e-003, 1.973265e-002, 2.438299e-002, 5.225078e-003, 2.878936e-003, 1.096711e-002, 1.424806e-002, 5.031192e-004, 2.815772e-003, -2.402100e-003, -1.933011e-002, -1.723532e-002, -7.691970e-003, -8.830922e-003, -1.426634e-002, -1.297161e-002, -4.916669e-003, 5.494119e-003, 2.036802e-002, 3.053943e-002, 2.956701e-002, 1.363731e-002, -9.071517e-003, -2.562063e-002, -2.750963e-002, -1.408940e-002, 4.063704e-003, 1.320053e-002, 6.432609e-003, 4.854438e-003, 6.660031e-003, 8.536488e-003, 1.524633e-003, -9.486960e-003, -1.711269e-002, -8.127394e-003, 1.934799e-003, -8.743550e-003, 3.107989e-003, 4.861360e-003, -1.043473e-002, -1.037846e-002, 4.322397e-003, -1.100911e-002, -7.716856e-003, -2.136009e-002, 3.956639e-003, 1.648009e-002, 2.758163e-002, 9.884063e-004, -9.963548e-003, 5.910138e-003, 1.209203e-002, 5.438432e-004, -3.731879e-003, -1.027361e-002, -8.251729e-003, 1.993477e-002, 4.169589e-002, 3.898380e-002, 3.273580e-002, 2.386815e-002, 1.988369e-002, 1.418444e-002, 1.128719e-002, 8.805276e-003, 1.046267e-003, -1.659845e-002, -3.933811e-002, -5.669325e-002, -5.703703e-002, -4.261242e-002, -1.396210e-002, 8.650912e-003, 2.340269e-002, 2.885585e-002, 2.793142e-002, 2.963035e-002, 3.019796e-002, 2.766606e-002, 2.785033e-002, 1.814151e-002, 6.325759e-004, -2.459933e-002, -1.166998e-002, -1.707510e-003, -1.543736e-002, -1.169145e-002, 2.958558e-003, -5.029326e-003, -7.484266e-003, -3.078674e-002, 2.269177e-003, 7.006570e-003, 2.304620e-002, 2.164450e-003, -2.214744e-002, -1.510853e-005, 1.217524e-002, 1.762672e-003, -1.057535e-003, 5.569566e-003, 1.401362e-002, 2.306527e-002, 1.127223e-002, 1.136472e-003, 7.398953e-003, 2.432307e-003, -1.024286e-002, -1.880565e-002, -1.393486e-002, -9.327302e-003, -1.560035e-002, -3.069308e-002, -5.132415e-002, -6.264537e-002, -6.239208e-002, -4.943347e-002, -3.023279e-002, -2.271785e-002, -1.963868e-002, -1.851968e-002, -2.626764e-002, -2.119198e-002, -1.259186e-002, -8.899981e-003, 5.918253e-003, 2.733482e-002, 1.165909e-002, -2.219193e-002, -2.209860e-002, -7.992103e-003, -1.599589e-002, -7.429527e-003, 6.864739e-003, 1.115715e-003, -1.816876e-003, -3.526695e-002, 3.605120e-003, -3.227382e-004, 2.417806e-002, 2.626816e-003, -2.550474e-002, 8.874357e-004, 1.392025e-002, -4.285516e-003, 5.742079e-003, 1.599028e-002, -1.204712e-002, -3.928916e-002, -4.264976e-002, -3.291665e-002, -8.964253e-003, 9.956866e-003, 1.527316e-002, 1.022131e-002, 9.896449e-003, 1.867348e-002, 2.351513e-002, 7.909726e-003, -1.200964e-002, -1.322858e-002, -1.151537e-002, 1.105107e-003, 9.615620e-003, 1.239523e-002, 2.405299e-002, 2.647288e-002, 1.964128e-002, 1.854948e-002, 1.104996e-002, -6.768110e-003, -2.008908e-002, -1.480310e-002, 1.845042e-003, -1.299217e-002, -1.788898e-002, -3.548043e-003, -5.629927e-003, 4.717680e-003, 2.023857e-002, 5.509697e-003, 4.426781e-003, -2.836443e-002, -3.537937e-003, -8.090090e-003, 1.579883e-002, 5.377245e-004, -2.430085e-002, -4.614432e-003, 4.582735e-003, -1.183328e-002, 1.129307e-002, 9.765374e-003, -2.854116e-002, -4.713418e-002, -2.176999e-002, 6.830820e-003, 2.380369e-002, 2.489689e-002, 2.042336e-002, 2.264332e-002, 3.027692e-002, 4.384962e-002, 5.341090e-002, 5.058765e-002, 3.988976e-002, 3.946901e-002, 5.606121e-002, 6.150191e-002, 4.605725e-002, 5.395149e-002, 6.501059e-002, 5.342319e-002, 4.038065e-002, 3.467403e-002, 3.064525e-002, 2.311965e-002, 3.912139e-003, -1.782462e-002, -5.872449e-003, -3.687752e-003, -1.560780e-002, 3.694033e-003, 1.103966e-005, 1.763392e-002, 2.610030e-002, 5.586032e-003, 1.129046e-002, -1.562125e-002, -8.211246e-003, -1.835140e-002, 1.676736e-003, -1.031686e-002, -2.942949e-002, -1.735908e-002, -8.211035e-003, -2.150666e-002, 1.552320e-002, 1.033280e-002, -2.231814e-002, -1.349078e-002, 1.564734e-002, 1.840449e-002, -7.151444e-003, -2.850048e-002, -4.496745e-002, -3.308098e-002, -2.011372e-002, -6.878470e-003, 1.915905e-002, 3.257074e-002, 2.502177e-002, 4.779535e-002, 7.540222e-002, 6.494244e-002, 1.289326e-002, 3.995167e-003, 2.934245e-003, -1.601171e-002, -2.140949e-002, -1.921548e-002, -5.405360e-003, 2.264928e-002, 2.631442e-002, 2.397457e-003, -9.512178e-003, 5.140403e-003, 9.150919e-004, 6.311852e-003, -4.846084e-003, 1.907567e-002, 1.854068e-002, -9.447367e-003, 9.171205e-003, 5.170232e-003, -1.289700e-002, -2.574850e-002, -1.320916e-002, -1.545796e-002, -2.502387e-002, -1.512561e-002, -1.825961e-002, -3.985271e-002, -3.260400e-005, 3.963799e-004, -1.269902e-002, 1.175702e-002, 2.154375e-002, 4.002075e-003, 7.482176e-003, 1.931107e-002, 1.982188e-002, 1.678141e-002, -1.329999e-002, -4.431683e-002, -2.669117e-002, -1.401862e-003, 2.458305e-004, 2.229712e-002, 6.144892e-002, 3.471055e-002, -4.321882e-002, -3.953875e-002, -1.093321e-002, 9.760102e-003,


© ISO/IEC 2004 — All rights reserved

Copyright International Organization for Standardization
Provided by IHS under license with ISO
No reproduction or networking permitted without license from IHS
Not for Resale

2.259841e-002, 1.399718e-002, -1.389774e-002, -3.512958e-004, 2.174545e-002, 1.213857e-002, -5.909091e-003, 6.997390e-003, 3.452819e-003, -1.463140e-003, -9.236896e-003, 1.296275e-002, -4.993226e-003, -2.715913e-002, 8.760710e-003, 1.102020e-002, -7.912586e-003, -2.358348e-002, -1.890011e-002, -1.714210e-002, -1.773928e-002, -1.035664e-003, -1.928817e-002, -4.130726e-002, -1.110773e-002, -6.416095e-003, -1.752968e-002, -1.357617e-002, -2.262651e-002, -4.067926e-002, -2.386296e-002, -4.348818e-003, -6.357648e-003, -1.520843e-002, -2.445118e-002, -5.621616e-002, -4.800533e-002, -1.171275e-002, -1.893339e-002, -1.481214e-002, 2.361532e-002, 2.079462e-002, -7.282111e-002, -7.629872e-002, -4.066890e-002, -1.260171e-002, 2.371488e-002, 2.204898e-002, -1.637392e-002, -3.318831e-002, -1.973791e-002, -1.527609e-002, -1.940664e-002, -2.016319e-002, -3.938712e-002, -3.511071e-002, -2.630083e-002, -1.176087e-003, -3.953095e-002, -4.290801e-002, -1.644546e-003, 4.660393e-003, 1.753595e-003, -1.024628e-002, -4.496027e-003, -2.066531e-003, -2.080540e-003, 1.610321e-002, -2.614559e-003, -2.075036e-002, 8.532205e-003, 1.613184e-002, -1.259499e-002, -2.801391e-002, -3.831842e-002, -3.378863e-002, -2.646266e-002, -1.565151e-002, -1.757550e-002, -3.267843e-002, -5.315977e-002, -6.963640e-002, -5.610227e-002, -2.125117e-002, -2.715075e-002, -3.546616e-002, -1.053790e-002, 1.027345e-002, -5.178399e-002, -8.888387e-002, -5.399457e-002, -2.418884e-002, -9.137165e-003, -6.055361e-003, -2.325013e-002, -4.452063e-002, -4.524645e-002, -4.223171e-002, -3.606232e-002, -2.908884e-002, -4.455289e-002, -4.105995e-002, -3.685775e-002, -1.936601e-002, -4.747324e-002, -4.478128e-002, -1.628849e-002, -6.306057e-003, 6.316428e-003, -5.352501e-003, 5.951990e-003, 9.034500e-003, 1.451226e-002, 3.050988e-002, 1.658955e-002, -5.586896e-003, 2.607639e-002, 2.923201e-002, 6.349528e-003, -9.649661e-003, -1.381216e-003, 1.626556e-002, 2.346926e-002, 3.012356e-002, 2.299215e-002, 3.169337e-003, -2.476128e-002, -4.632957e-002, -4.031904e-002, -1.553396e-002, -2.101327e-002, -3.101076e-002, -2.649529e-002, -4.022379e-003, -2.962586e-002, -6.803620e-002, -2.977396e-002, 1.398992e-002, 3.471271e-002, 3.468594e-002, 2.601208e-002, 1.136142e-002, 1.370531e-003, -1.177261e-002, -1.564442e-002, -1.320549e-002, -2.800790e-002, -2.303593e-002, -2.017918e-002, -8.386363e-003, -3.224325e-002, -2.891846e-002, -1.964106e-002, -7.680428e-003, 1.254885e-002, -5.095706e-004, 1.092114e-002, 1.622823e-002, 2.058170e-002, 2.947739e-002, 2.525684e-002, 6.659472e-003, 3.112293e-002, 3.567599e-002, 1.368624e-002, 6.469009e-003, 2.145133e-002, 4.160595e-002, 5.158151e-002, 5.225784e-002, 4.356280e-002, 2.205107e-002, -7.367553e-003, -2.559126e-002, -2.128836e-002, 1.798209e-003, -4.169374e-003, -1.519805e-002, -2.376739e-002, -1.814504e-002, -5.337028e-003, -2.924415e-002, -1.449568e-002, 2.435752e-002, 5.426194e-002, 6.518000e-002, 6.230293e-002, 5.439776e-002, 3.798131e-002, 1.677984e-002, 1.036738e-002, 3.353073e-003, -7.482216e-003, -8.382966e-003, 8.140007e-004, 4.344778e-003, -9.967519e-003, -3.191258e-003, -1.314995e-002, -3.429437e-003, 1.292363e-002, 3.304283e-003, 1.664379e-002, 1.781708e-002, 1.449674e-002, 1.299937e-002, 3.018204e-002, 1.244383e-002, 3.046453e-002, 3.471940e-002, 1.116256e-002, 6.832839e-003, 2.846460e-002, 4.461636e-002, 5.226247e-002, 4.934156e-002, 3.382213e-002, 1.467713e-002, -9.576596e-003, -2.443994e-002, -2.116238e-004, 1.881885e-002, 8.927956e-003, -1.232783e-003, -1.145710e-002, -1.674375e-002, -7.853778e-003, -1.173927e-002, -6.485676e-003, 2.072110e-002, 5.034071e-002, 6.666900e-002, 6.975495e-002, 6.127851e-002, 4.498512e-002, 2.403068e-002, 1.851617e-002, 1.177279e-002, 6.859216e-003, 8.619895e-003, 1.623547e-002, 1.497131e-002, 1.424879e-002, 1.131039e-002, -3.855045e-003, 6.734970e-003, 1.123566e-002, 9.773899e-003, 2.397476e-002, 1.441448e-002, -2.211139e-003, -2.392324e-003, 1.800201e-002, 4.468505e-003, 1.904185e-002, 2.403585e-002, -2.794444e-003, -8.002049e-003, 1.717061e-002, 2.672573e-002, 3.023958e-002, 2.617718e-002, 1.485625e-002, -3.762162e-003, -2.339279e-002, -1.914951e-002, 1.525404e-002, 2.268117e-002, 1.531578e-002, 5.264948e-003, -1.404987e-003, -3.637591e-003, -1.570430e-002, -1.416249e-002, -1.533628e-002, 3.518410e-003, 2.374089e-002, 4.051730e-002, 4.637919e-002, 4.687629e-002, 3.324835e-002, 1.723447e-002, 1.538029e-002, 1.665307e-002, 1.509818e-002, 2.103595e-002, 2.954077e-002, 1.545397e-002, 2.599245e-002, 1.476274e-002, 4.605056e-003, 1.660410e-002, -2.757376e-003, 2.408961e-003, 2.176420e-002, 8.377628e-003, -1.410756e-002, -2.271491e-002, 4.477336e-003, -1.010925e-002, 1.776540e-003, 9.748115e-003, -7.290625e-003, -1.883616e-002, -6.173270e-004, 7.073570e-004, 2.087143e-003, 6.661395e-004, -8.291821e-003, -2.187435e-002, -2.553511e-002, -1.265405e-002, 2.353096e-002, 2.733301e-002, 1.856248e-002, 3.537586e-003, -7.201099e-003, -1.554478e-003, -1.544583e-002, -3.061311e-002, -2.573604e-002, -9.340606e-003, 2.147378e-003, 1.668554e-002, 2.612096e-002, 2.837650e-002, 1.554000e-002, 3.782580e-003, 8.728496e-003, 1.801143e-002, 1.795634e-002, 2.213273e-002, 1.841336e-002, 9.854128e-003, 2.442142e-002, 8.616730e-003, 1.205052e-002, 9.200260e-003, -1.268386e-002, -7.617668e-003, 6.017670e-003, -3.016084e-003, -1.516908e-002, -2.179589e-002, -3.484797e-003, -1.662575e-002, -9.695828e-003, 1.314115e-004, -1.844785e-002, -2.471022e-002, -1.254863e-002, -4.717287e-003, -2.007106e-003, -3.714558e-003, -1.185829e-002, -1.682495e-002, -2.532391e-002, -7.273859e-003, 4.618898e-003, 4.662940e-003, 2.463606e-003, -1.780085e-002, -3.181071e-002, -1.525209e-002, -1.873849e-002, -3.979256e-002, -3.760343e-002, -1.817475e-002, -5.270684e-003, 5.225068e-003, 1.234470e-002, 1.125710e-002, -1.191888e-004, -7.788948e-003, 5.221196e-003, 1.554697e-002, 1.597933e-002, 1.820567e-002, 1.518022e-003, 4.164047e-003, 1.697069e-002, 2.176482e-003, 1.137792e-002, -3.249463e-003, -

© ISO/IEC 2004 — All rights reserved


Copyright International Organization for Standardization
Provided by IHS under license with ISO
No reproduction or networking permitted without license from IHS
Not for Resale

9.832585e-003, -7.878706e-003, -1.133587e-002, -2.038694e-002, -1.545079e-002, -8.018975e-003, -5.875191e-003, -1.434765e-002, -1.507894e-002, -8.560444e-003, -2.585799e-002, -3.200607e-002, -2.135233e-002, -9.028701e-003, -2.666115e-003, 4.134827e-004, -1.552647e-004, -1.314031e-002, -2.168662e-002, -1.646957e-002, -2.427902e-002, -9.581120e-003, 2.771924e-003, -1.511017e-002, -2.392012e-002, 8.079446e-003, 6.630061e-003, -2.729288e-002, -3.959907e-002, -2.297645e-002, -7.398625e-003, 2.684128e-003, 8.492895e-003, 4.185176e-003, -8.829490e-003, -9.406714e-003, 7.355529e-003, 1.582773e-002, 1.130417e-002, 9.059647e-003, -1.231368e-002, 1.971834e-003, 7.908659e-003, -5.418156e-003, 2.608083e-003, -2.632829e-003, -7.533148e-003, -1.109614e-003, -1.246523e-002, -2.789407e-002, -1.181805e-002, 1.159804e-002, 7.152941e-004, -1.189585e-002, -1.671343e-002, -1.380029e-002, -2.585829e-002, -3.487264e-002, -2.384944e-002, -4.946157e-003, 6.496960e-003, 1.210098e-002, 4.011592e-003, -1.815004e-002, -2.270866e-002, -2.364939e-002, -3.188358e-002, -4.863136e-004, 4.121774e-003, -2.045064e-002, -2.349496e-002, 1.541153e-002, 2.942462e-002, -6.670944e-003, -3.653594e-002, -2.310179e-002, -4.097914e-003, 8.897380e-003, 1.097665e-002, 3.513692e-004, -1.501894e-002, -7.538643e-003, 6.916758e-003, 1.113724e-002, 6.227981e-003, -1.941258e-003, -2.168656e-002, -5.277621e-003, -3.673065e-003, -1.207795e-002, -2.941221e-003, -1.736021e-004, -1.040380e-002, -1.340262e-003, -8.447413e-003, -2.905493e-002, -8.340636e-003, 2.761065e-002, 1.987388e-002, 3.415618e-003, -1.018329e-002, -1.344487e-002, -2.454111e-002, -3.254448e-002, -2.042525e-002, 3.433560e-003, 1.868422e-002, 1.949742e-002, -5.331106e-004, -2.891846e-002, -3.004364e-002, -1.762339e-002, -1.439529e-002, 8.531724e-003, -7.586212e-003, -2.383666e-002, -1.736362e-002, -7.805032e-004, 1.673446e-002, 1.742853e-003, -2.007131e-002, -2.241320e-002, -4.909518e-003, 1.117406e-002, 1.519174e-002, 3.088985e-003, -1.250564e-002, -2.830552e-003, 7.889038e-003, 8.316368e-003, 2.250857e-004, -7.784188e-003, -2.360876e-002, -6.781925e-005, -5.366578e-003, -1.792107e-002, 7.327544e-004, 6.738187e-003, -1.251483e-002, -5.633238e-003, -3.693035e-003, -2.174153e-002, -1.164395e-002, 2.282602e-002, 2.891587e-002, 1.530407e-002, -3.377787e-004, -1.840175e-002, -2.176711e-002, -2.449566e-002, -1.472679e-002, 1.248175e-002, 2.435358e-002, 1.284115e-002, -1.278618e-002, -3.158904e-002, -3.086078e-002, -1.443315e-002, 4.281710e-003, 1.182731e-002, -1.699969e-002, -3.323787e-002, -1.315164e-002, 8.138128e-003, 2.127815e-002, 2.187907e-002, 4.976598e-003, -6.084075e-003, -5.510328e-004, 1.164796e-002, 1.578076e-002, 5.445373e-003, -7.455757e-003, -3.816293e-004, 9.320856e-003, 7.192394e-003, 2.447773e-004, -2.832316e-004, -1.248453e-002, 9.456662e-003, -1.016545e-002, -1.754537e-002, 8.001103e-003, 9.289799e-003, -6.466724e-003, -3.579356e-004, 3.691888e-003, -9.576086e-003, -5.779376e-003, 5.701088e-003, 1.272297e-002, 1.239581e-002, 1.046121e-002, -1.480723e-002, -1.619458e-002, -1.440890e-002, -9.519924e-003, 1.679614e-002, 3.171225e-002, 1.704237e-002, -8.477887e-003, -2.501083e-002, -2.560131e-002, -1.108122e-002, 8.896521e-003, 1.276801e-002, -8.434787e-003, -2.913906e-002, -1.981447e-002, 1.891334e-003, 2.126693e-002, 3.213744e-002, 2.762113e-002, 2.229559e-002, 1.846239e-002, 1.857731e-002, 1.570004e-002, 8.490381e-003, 1.267607e-003, 2.320081e-003, 7.903443e-003, 9.103060e-003, 1.010834e-002, 3.062414e-003, -8.197794e-003, 6.510441e-003, -1.053628e-002, -5.500327e-003, 1.393994e-002, 1.210433e-002, 1.374026e-003, -3.595148e-003, 2.842955e-003, 3.981088e-003, 1.396169e-002, 5.416455e-003, -3.622371e-003, 9.506871e-004, 1.589554e-002, -5.144348e-003, -1.065238e-002, -8.220164e-003, -5.120747e-003, 2.259982e-002, 3.814463e-002, 2.062749e-002, -1.191041e-002, -3.321140e-002, -3.678703e-002, -2.792856e-002, -9.176067e-003, 2.770516e-003, -2.450084e-003, -1.749876e-002, -2.153591e-002, -1.716374e-002, -6.721842e-003, 5.900662e-003, 1.731368e-002, 2.453601e-002, 3.419666e-002, 3.450993e-002, 2.229095e-002, 7.445078e-003, 8.686923e-003, 8.868302e-003, 6.141222e-003, 5.399798e-003, 8.033274e-003, 7.126843e-003, -2.413535e-003, -1.211140e-003, -1.264546e-003, 7.843328e-003, 1.586825e-002, 6.295645e-003, 8.036252e-003, -2.700104e-003, 7.316802e-004, 1.155116e-002, 2.325404e-002, 1.540538e-002, -9.832852e-003, -1.263826e-002, 1.500768e-002, 3.700283e-003, -5.798816e-003, -3.181668e-003, 3.959307e-003, 2.684696e-002, 3.800694e-002, 2.373770e-002, -7.989634e-003, -2.676405e-002, -3.220218e-002, -2.899193e-002, -2.113101e-002, -1.524467e-002, -1.145036e-002, -1.451825e-002, -2.608467e-002, -2.251249e-002, -2.156490e-002, -2.367737e-002, -1.095582e-002, 1.151903e-002, 3.482721e-002, 4.216646e-002, 3.011037e-002, 9.439109e-003, 9.746905e-003, 1.288857e-002, 6.718499e-003, 6.185257e-004, 1.095353e-002, 1.115535e-002, -2.462325e-004, 6.866444e-003, 1.294810e-002, 1.399071e-002, 1.771003e-002, -3.070435e-003, 1.480685e-002, -2.075599e-003, -5.670721e-003, -7.374728e-004, 1.664919e-002, 1.106285e-002, -1.813212e-002, -2.705406e-002, 8.894050e-003, 1.149583e-002, -6.789938e-003, -1.425647e-003, 1.038289e-002, 2.751652e-002, 3.814281e-002, 3.045323e-002, 1.259218e-002, -1.928638e-003, -7.069123e-003, -5.414486e-003, -2.183457e-003, -6.203207e-003, -1.312074e-002, -1.791359e-002, -2.666122e-002, -2.119135e-002, -1.635185e-002, -1.129838e-002, -3.855607e-003, 9.051443e-003, 2.194141e-002, 3.029866e-002, 2.696971e-002, 1.232754e-002, 7.679088e-003, 1.000040e-002, 7.726137e-004, -7.053317e-003, 1.201136e-002, 7.711857e-003, -7.514676e-003, 8.512789e-003, 1.666075e-002, 1.333741e-002, 1.396780e-002, -1.119339e-002, 2.168590e-002, 6.263775e-003, -8.095802e-003, -1.649961e-002, -5.097044e-004, -1.252359e-003, -1.490707e-002, -2.502864e-002, -9.471725e-004, 2.034069e-002, -2.788540e-003, -7.299429e-003, 1.058746e-002, 2.599113e-002, 3.467197e-002, 2.590558e-002,


© ISO/IEC 2004 — All rights reserved

Copyright International Organization for Standardization
Provided by IHS under license with ISO
No reproduction or networking permitted without license from IHS
Not for Resale

1.342026e-002, 1.112639e-002, 1.527583e-002, 2.035892e-002, 1.964955e-002, 6.681542e-003, -1.416000e-002, -1.688713e-002, -2.589715e-002, -2.072608e-002, -1.019089e-002, 6.821515e-004, 2.302587e-003, 6.678285e-004, 3.044210e-003, 1.199625e-002, 1.772137e-002, 9.511257e-003, 5.130424e-003, 5.979282e-003, -1.126943e-002, -4.558585e-003, 1.262695e-002, -7.904965e-004, -1.046831e-002, 9.552681e-003, 9.901519e-003, 1.178440e-002, 8.800295e-003, -1.490845e-002, 2.039117e-002, 5.867164e-003, -7.860755e-003, -2.470115e-002, -1.283355e-002, -8.648541e-003, -8.172506e-003, -8.898486e-003, -6.345929e-003, 1.602297e-002, 3.233353e-003, -7.781269e-003, 7.598025e-003, 2.817148e-002, 2.994024e-002, 1.087531e-002, -9.738313e-003, 3.273427e-003, 2.167989e-002, 2.291564e-002, 1.869853e-002, 1.056188e-002, -1.118075e-002, -1.608239e-002, -2.279278e-002, -2.209500e-002, -1.942278e-002, -1.296292e-002, -1.093465e-002, -1.124659e-002, -5.318928e-003, 5.396415e-003, 1.033344e-002, 7.134476e-003, 3.000339e-003, -1.828641e-004, -1.934465e-002, 6.962339e-004, 5.629765e-003, -4.097735e-003, -9.281282e-003, -8.590852e-004, 2.208181e-003, -6.343333e-004, 7.890784e-003, -1.424234e-002, 1.586516e-002, 7.066149e-003, 2.577230e-004, -1.550209e-002, -1.334576e-002, -8.610418e-003, -2.688183e-003, 9.005524e-003, -6.166691e-003, -3.865948e-003, -5.269606e-003, -1.165268e-002, 9.276281e-004, 2.861936e-002, 2.800527e-002, 1.005978e-002, 1.937909e-003, 1.902745e-002, 3.090564e-002, 3.264320e-002, 2.575136e-002, 1.511406e-002, -1.589480e-003, -1.305784e-002, -2.016850e-002, -2.008648e-002, -1.443598e-002, -1.082045e-002, -9.017568e-004, 1.036338e-003, 4.813938e-003, 7.907502e-003, 8.341640e-003, 8.657235e-003, 1.247483e-003, -6.481646e-003, -1.793326e-002, 1.229320e-003, -3.575573e-003, -2.816275e-003, -2.539960e-003, -9.785288e-003, -1.188791e-002, -8.361156e-003, 8.403502e-003, -1.121975e-002, 9.091853e-003, 9.157743e-003, 4.514540e-003, -7.197533e-003, -6.718834e-003, -2.856267e-005, 8.037952e-003, 2.672021e-002, 2.367223e-003, -1.175761e-002, -1.055154e-002, -2.359708e-002, -9.428244e-003, 1.963868e-002, 2.456972e-002, 5.795889e-003, -1.653466e-003, 1.295717e-002, 2.559690e-002, 2.497281e-002, 1.366787e-002, -7.573947e-003, -2.575129e-002, -3.160735e-002, -3.296721e-002, -2.947458e-002, -1.995985e-002, -6.072640e-003, 4.771667e-003, 1.122236e-002, 1.595383e-002, 1.356627e-002, 1.403001e-002, 1.526076e-002, 3.561336e-003, -7.687805e-003, -3.179257e-003, 1.002840e-002, -1.592160e-004, 6.110096e-003, -6.873841e-004, -2.239093e-003, -9.270837e-003, -1.711945e-002, 2.640229e-003, -1.120522e-002, 8.038597e-004, 3.748437e-003, 2.734294e-003, -6.917799e-003, 2.601929e-003, 1.638011e-002, 1.305580e-002, 2.486060e-002, 1.141856e-002, -7.829268e-003, -5.476120e-003, -1.945577e-002, -1.846849e-002, 7.445723e-003, 1.720292e-002, 5.144939e-003, -4.569493e-003, 5.723517e-003, 1.788422e-002, 1.451466e-002, 1.791926e-003, -1.876245e-002, -3.025125e-002, -3.360866e-002, -3.929909e-002, -3.819797e-002, -2.294479e-002, -7.485939e-003, 2.703465e-003, 8.339126e-003, 1.333851e-002, 1.593113e-002, 1.542450e-002, 1.243570e-002, -1.864212e-004, -1.050457e-002, 2.189296e-003, 3.436613e-003, 7.191210e-003, 1.141293e-002, 2.759189e-003, 1.552467e-002, 1.343266e-003, -2.410259e-002, -2.771912e-003, -1.078186e-002, -5.024223e-003, -1.688476e-003, -2.724754e-003, 8.118546e-004, 9.924639e-003, 1.191324e-002, 2.530251e-004, 8.193046e-003, 6.466624e-003, -1.036236e-002, -5.537753e-003, -7.883315e-003, -1.985790e-002, -2.371350e-003, 1.413387e-002, 3.890990e-003, -4.591472e-003, 2.480074e-003, 1.119816e-002, 7.871684e-003, -2.863012e-003, -1.731255e-002, -2.489186e-002, -2.533818e-002, -2.564111e-002, -2.554564e-002, -1.597220e-002, -5.192350e-003, -4.052045e-003, -1.799437e-004, 2.952696e-003, 7.449957e-003, 6.383644e-003, 6.207896e-003, -1.092459e-003, 2.608102e-003, 1.956504e-003, -1.184219e-002, 1.921746e-003, 7.661071e-004, -5.009859e-003, 1.867041e-002, 1.399951e-002, -1.931704e-002, -2.358817e-003, -4.919740e-003, -7.235546e-003, -5.600697e-003, 3.738196e-003, 7.692653e-003, 5.466724e-003, -1.441563e-003, -1.417546e-002, -8.618191e-003, 9.239639e-003, -2.917947e-003, -9.141204e-004, 3.212834e-003, -8.060251e-003, -9.695704e-003, 7.697605e-003, 7.178784e-003, 2.605542e-003, 1.298275e-003, 5.282245e-003, 6.070965e-003, 4.174490e-003, -1.822290e-003, -7.529071e-003, -1.142867e-002, -6.132349e-003, -4.693886e-003, -1.082763e-003, -9.056626e-004, -1.053738e-002, -1.367757e-002, -1.129109e-002, -6.846677e-003, -3.901046e-003, 3.822095e-004, 1.840629e-004, 1.175827e-002, -6.872982e-003, -1.843381e-002, -6.933829e-003, -8.145115e-003, -6.260452e-003, 1.695675e-002, 2.270544e-002, -4.475202e-003, 5.313534e-003, -3.620729e-003, -1.116723e-002, -1.222924e-002, -3.533654e-003, 7.568413e-003, 6.877083e-003, -9.818347e-003, -2.517918e-002, -1.098297e-002, 1.650835e-002, 9.140281e-003, -5.468144e-003, 5.042888e-003, 7.135432e-003, -3.098320e-003, 6.119604e-003, 7.450025e-003, 5.877232e-003, -1.171168e-003, -1.213396e-003, 3.516044e-003, 7.235028e-003, 5.979878e-003, -3.206176e-004, -1.877758e-003, 2.299748e-003, 5.854608e-003, 3.991116e-003, -2.518927e-003, -1.694395e-002, -2.267926e-002, -1.830581e-002, -1.304552e-002, -8.192770e-003, 1.815057e-003, 3.792364e-003, 9.412404e-003, -1.726723e-003, -5.153447e-003, -6.074594e-003, -1.579888e-002, -8.556369e-003, 1.434794e-002, 2.669476e-002, 5.804613e-003, 6.549946e-003, -9.295460e-003, -9.049174e-003, -7.257728e-003, 1.136530e-003, 1.179082e-002, 1.243025e-002, -5.168077e-003, -1.262822e-002, 4.882456e-003, 1.549229e-002, 3.025517e-003, -9.952310e-003, 1.071583e-003, 1.562745e-002, 8.684081e-003, 7.591538e-003, 1.772352e-002, 1.498723e-002, 3.581588e-003, -8.893897e-003, -3.198833e-003, 2.252257e-004, -1.567773e-004, -4.483306e-003, -1.609197e-003, 3.019075e-003, 6.148109e-003, 1.068947e-003, -3.745026e-003, -1.849945e-002, -2.202880e-002, -1.594537e-002, -9.700230e-003, -

© ISO/IEC 2004 — All rights reserved


Copyright International Organization for Standardization
Provided by IHS under license with ISO
No reproduction or networking permitted without license from IHS
Not for Resale

5.528789e-003, 8.287273e-003, 7.213017e-003, 5.730089e-004, -5.411223e-003, 8.949162e-003, 1.039852e-002, -1.268765e-002, -1.920099e-002, -3.766067e-003, 7.252058e-003, 1.662735e-003, -2.255812e-003, -1.804260e-002, 9.109860e-003, 3.575554e-003, 5.123504e-003, 1.047764e-002, 7.308884e-003, -2.579538e-003, 2.816650e-004, 8.864034e-003, 5.037477e-003, -1.172223e-002, -1.623286e-002, -1.061664e-002, -5.124731e-004, -1.114409e-003, -2.067412e-003, 2.947485e-003, 9.678233e-003, -1.633431e-003, -2.048143e-002, -1.889124e-002, -1.200615e-002, -1.207652e-002, -1.044983e-002, -6.454629e-003, -1.157743e-003, -2.407870e-003, -2.108050e-003, -6.743141e-004, -1.187109e-002, -1.599158e-002, -1.296413e-002, 1.071618e-004, 5.040204e-003, 1.135881e-002, -9.688677e-004, -9.299260e-003, -1.173122e-002, 5.543965e-003, 1.529114e-002, 5.910498e-004, -1.518378e-002, -1.502426e-002, -1.416365e-002, -2.066967e-002, -1.183350e-002, -2.876235e-002, 4.092572e-003, -6.523408e-003, -5.535214e-003, 1.149913e-003, 8.263353e-003, 1.342282e-002, 1.187217e-002, 1.545483e-002, 9.558118e-003, -3.226780e-003, -7.450307e-003, -1.189456e-002, 6.048329e-004, -3.641111e-004, -1.730042e-003, 9.565580e-004, 3.858334e-003, -4.121728e-005, -1.515627e-002, -1.553640e-002, -9.427658e-003, -5.562411e-003, 2.138078e-005, 5.296171e-003, 9.193662e-003, 1.157605e-002, 1.062852e-002, 7.097025e-003, 3.418824e-003, -2.546912e-003, -7.767191e-003, 4.905077e-003, 1.537986e-002, 1.040957e-002, -7.916483e-004, -1.147993e-002, -7.168420e-003, -6.119650e-003, 1.007836e-002, 2.234643e-002, 1.620065e-002, 1.080343e-002, -1.024657e-002, -2.201579e-002, -1.648657e-003, -2.098306e-002, -1.169475e-002, -1.298280e-002, -8.514300e-003, -5.574236e-003, -2.043548e-003, 2.457880e-003, -4.353466e-003, 2.617164e-003, 4.367258e-003, 7.884679e-003, -3.208212e-003, -1.050420e-002, 5.200970e-003, 1.517549e-002, 8.714062e-003, 1.517660e-004, 3.699703e-003, 1.307321e-003, -6.507931e-003, -6.012330e-003, 2.000736e-004, 7.717589e-003, 1.513055e-002, 2.146268e-002, 2.239563e-002, 2.138836e-002, 1.707675e-002, 1.204403e-002, 3.230446e-003, -1.093956e-003, -2.346841e-004, 1.126079e-002, 1.485181e-002, -5.730994e-003, -1.301180e-002, -4.039780e-004, 6.879381e-004, -2.001791e-002, -2.162546e-002, 3.570447e-003, 1.672541e-002, 5.401050e-003, -1.846944e-002, -1.998379e-002, 2.532552e-003, -1.905186e-002, -9.903727e-003, -8.763690e-003, -3.588189e-003, 2.017358e-003, -8.436671e-003, -5.644853e-003, -2.007198e-003, 8.863645e-003, 2.492243e-003, 1.888119e-002, 1.402298e-002, -1.248005e-003, -1.031505e-003, 1.001545e-002, 1.474737e-002, -1.588368e-003, -2.327763e-003, -6.342858e-003, -1.089333e-002, -1.448553e-002, -1.189553e-002, -6.976540e-003, 1.656870e-003, 9.031997e-003, 6.907729e-003, 2.938302e-003, 1.948068e-003, -2.073084e-003, -4.170237e-003, -1.330332e-003, 2.949670e-003, 6.875725e-003, 1.556179e-003, -2.626016e-002, -2.929497e-002, 5.092071e-003, 1.334483e-002, -1.754161e-002, -3.807539e-002, -1.399092e-002, -1.282646e-002, -2.014794e-002, -2.182093e-002, -5.794462e-003, 2.236242e-002, 1.445045e-003, 2.150779e-004, -1.296451e-003, 1.365002e-002, 1.175765e-002, -1.079350e-002, -7.481439e-003, 1.106532e-002, 2.142552e-002, 4.756294e-003, 1.940125e-002, 2.295453e-002, -1.419803e-003, -3.418388e-003, 8.212080e-003, 1.886753e-002, 6.338351e-003, 3.034244e-003, -8.363164e-004, -7.028947e-003, -1.606080e-002, -1.478809e-002, -1.615069e-002, -1.556153e-002, -1.440995e-002, -1.390703e-002, -1.414150e-002, -1.111044e-002, -1.017101e-002, -3.981976e-003, 1.866179e-003, 2.236380e-003, 1.488493e-003, -4.313850e-003, -1.515790e-002, -1.536761e-002, 7.471937e-003, 1.949846e-002, 4.644199e-003, -8.943331e-003, -4.138961e-003, -1.421678e-002, -2.622448e-002, -2.612398e-002, 4.897549e-003, 3.446648e-002, 2.575891e-002, 1.566199e-002, 1.855999e-002, 1.633033e-002, -5.951869e-003, -2.977953e-002, -2.460880e-002, -3.849669e-003, -5.075755e-003, -1.421734e-002, -1.023970e-003, 9.819849e-003, -1.124392e-002, -1.012329e-002, -2.901192e-003, 8.241009e-003, 1.149661e-002, 1.461527e-002, 1.897296e-002, 1.476046e-002, 8.603173e-003, -5.529426e-004, -9.307829e-003, -1.311643e-002, -1.226793e-002, -1.234041e-002, -1.248420e-002, -1.090572e-002, -9.638757e-003, -5.506276e-003, 1.045720e-005, -7.287945e-003, -1.051945e-002, -4.763910e-003, -1.021415e-003, 7.954030e-003, 1.590504e-002, 2.314710e-002, 1.887819e-002, 2.647699e-002, 2.848270e-002, 2.993083e-002, 1.947916e-002, 8.926717e-003, 2.453856e-002, 3.967043e-002, 2.645027e-002, 3.523049e-002, 3.143755e-002, 1.717758e-002, -7.660938e-003, -2.585875e-002, -2.592773e-002, -8.251584e-003, -2.958743e-003, -5.886020e-003, -2.682260e-003, 1.119709e-003, -1.166477e-002, -1.551759e-002, -6.526680e-003, -8.251117e-004, 4.172801e-003, 1.297991e-002, 2.075826e-002, 2.131726e-002, 1.954858e-002, 1.131411e-002, 2.818908e-003, 1.088815e-004, -1.516877e-003, -2.290279e-003, -5.503892e-003, -1.124309e-002, -1.163813e-002, -7.533225e-003, -7.302846e-003, -9.407812e-003, -5.016841e-003, -4.767020e-003, -4.425354e-002, -3.201415e-002, -1.749090e-002, -9.230449e-003, -8.280071e-003, 2.580582e-003, 6.806607e-003, 2.194127e-002, 1.643723e-002, 7.324996e-003, -5.426588e-003, -6.729829e-003, -2.802552e-002},
{-4.541908e-003, -8.801419e-003, -4.718798e-003, 5.626632e-003, 9.887170e-003, 1.731703e-002, 2.060185e-002, 1.723300e-002, 4.160197e-003, -6.451834e-003, -1.869828e-002, -1.629567e-002, -1.275498e-002, -1.242473e-002, -7.691748e-003, -5.554788e-003, -5.680150e-004, 1.056988e-002, 1.465843e-002, 1.472087e-002, 2.181114e-002, 2.429549e-002, 2.466423e-002, 2.007123e-002, 1.374554e-002, 1.120136e-002, 7.852532e-003, 3.963146e-003, 3.537652e-003, 7.502820e-005, -9.836774e-003, -5.193475e-003, -2.752353e-003, 3.815921e-004, 5.508320e-003, 3.191265e-003, -1.233148e-002, -1.259185e-002, 4.153776e-003, 1.083454e-002, -8.560645e-004, -4.576585e-003, 1.800336e-003, -2.237284e-002, -2.888742e-002, -4.230690e-002, -5.648001e-003, -1.043569e-002, -


--`,,```,,,,````-`-`,,`,,`,`,,`---
© ISO/IEC 2004 — All rights reserved

Copyright International Organization for Standardization
Provided by IHS under license with ISO
No reproduction or networking permitted without license from IHS
Not for Resale

7.943014e-003, 4.593418e-003, 1.135282e-002, 1.503215e-002, 1.220735e-002, 8.749347e-004, -7.324813e-003, -1.651934e-002, -2.031844e-002, -2.266492e-002, -2.906734e-002, -2.357507e-002, -1.879841e-002, -1.821021e-002, -1.792838e-002, -1.204049e-002, 1.273487e-004, 9.591085e-003, 2.066851e-002, 2.694092e-002, 2.290399e-002, 1.392051e-002, 5.872163e-003, 2.394487e-004, -1.005123e-002, -1.590008e-002, -2.331537e-002, -2.788384e-002, -2.455330e-002, -1.574657e-002, -2.184423e-002, -2.375230e-002, -1.056609e-002, 6.934007e-003, 6.632050e-003, 3.755576e-003, 7.844007e-003, 2.384974e-002, 1.597941e-002, 3.018846e-003, 1.117373e-002, 1.493546e-002, -1.086673e-002, -3.110088e-002, -2.697135e-003, -6.849918e-003, 1.535990e-003, 1.144031e-002, 8.367750e-003, 4.731070e-003, 7.528590e-003, 1.019799e-002, 7.059251e-003, 6.237517e-003, 3.925359e-003, -3.904568e-003, -7.952029e-003, -9.333838e-003, -1.115334e-002, -1.688736e-002, -1.292613e-002, -5.231040e-004, 1.948737e-002, 2.915515e-002, 3.729937e-002, 3.733738e-002, 3.481213e-002, 3.015352e-002, 2.268352e-002, 1.610866e-002, 6.197247e-003, -7.892829e-003, -2.188610e-002, -3.355186e-002, -3.180547e-002, -1.861659e-002, -1.092662e-002, -9.980412e-003, -3.200986e-003, 9.665556e-003, 2.693610e-002, 3.053000e-002, 1.865800e-002, 2.454199e-002, 2.711717e-002, 7.734431e-004, 2.894805e-003, 1.993863e-002, -2.761791e-004, -1.858012e-002, -1.894577e-004, 1.102038e-003, 7.170163e-003, 9.130820e-003, -5.170564e-003, 7.059156e-003, 2.352776e-002, 2.983186e-002, 2.641096e-002, 2.612141e-002, 1.472178e-002, 3.204732e-003, -2.835871e-003, -6.852522e-003, -1.586326e-002, -2.382700e-002, -1.721506e-002, -4.339775e-003, 5.890922e-003, 1.545308e-002, 2.705379e-002, 2.632106e-002, 1.962606e-002, 1.499592e-002, 8.435313e-003, 4.351654e-003, -5.811460e-004, -1.017556e-002, -2.630556e-002, -4.265992e-002, -5.057627e-002, -3.950984e-002, -2.104853e-002, -8.147239e-003, -5.059348e-004, 2.653176e-003, 1.853121e-002, 3.241910e-002, 3.017839e-002, 1.882451e-002, 2.759640e-002, 1.087890e-003, -1.669490e-002, 2.928645e-003, 2.596205e-003, -1.068909e-002, -1.262966e-002, -4.961843e-003, -2.899152e-003, -1.017242e-002, -5.153626e-003, 2.221970e-002, 3.693269e-002, 3.704272e-002, 4.454074e-002, 3.026913e-002, 1.818985e-002, 1.721395e-002, 1.503478e-002, 2.191704e-003, -1.280567e-002, -2.514994e-002, -2.339913e-002, -1.220490e-002, 5.133000e-003, 1.833301e-002, 2.848660e-002, 2.474695e-002, 1.506921e-002, 6.300056e-003, -8.187711e-005, -1.374553e-003, -3.525679e-003, -1.184512e-002, -2.538820e-002, -3.546131e-002, -4.296268e-002, -3.645153e-002, -1.906396e-002, -7.368601e-003, 1.908810e-002, 1.731549e-002, 1.584856e-002, 2.284109e-002, 2.998195e-002, 2.317013e-002, 2.665305e-002, 1.356073e-002, -2.539904e-002, -1.880906e-002, -2.001152e-003, -4.570501e-003, -2.339507e-003, 4.185089e-003, -5.246822e-003, -8.143048e-004, 1.941543e-002, 2.571333e-002, 2.204138e-002, 3.430801e-002, 2.774378e-002, 8.741395e-003, 1.566509e-002, 1.979306e-002, 3.241053e-003, -1.795136e-002, -3.612190e-002, -4.188599e-002, -3.903059e-002, -2.330856e-002, -4.221013e-003, 1.098829e-002, 1.905748e-002, 1.176095e-002, -4.060273e-003, -1.522907e-002, -2.111171e-002, -1.845724e-002, -1.311278e-002, -1.501444e-002, -2.615801e-002, -3.599278e-002, -4.195345e-002, -3.410995e-002, -1.419910e-002, -2.805267e-003, 1.211379e-002, 2.920913e-002, 1.866896e-002, 5.644110e-003, 8.150492e-003, 1.191262e-002, 2.840729e-003, 2.025488e-003, -1.907255e-002, -3.334701e-002, -1.426530e-002, -4.319332e-003, 2.022405e-003, 7.509518e-003, -1.847557e-003, 1.266202e-002, 2.291488e-002, 2.076905e-003, 1.136629e-002, 2.058488e-002, 8.293050e-003, 1.137783e-002, 2.717445e-002, 1.317819e-002, -1.076862e-002, -2.053734e-002, -2.934268e-002, -3.698173e-002, -3.825094e-002, -2.383039e-002, 1.187505e-003, 2.217540e-002, 2.641602e-002, 1.717887e-002, 1.539246e-003, -1.624333e-002, -2.364551e-002, -2.307313e-002, -9.969867e-003, -9.187529e-003, -1.887072e-002, -2.962839e-002, -4.157682e-002, -3.440191e-002, -1.711070e-002, 9.203317e-005, 1.562788e-002, 2.620340e-002, 2.643953e-002, 7.699420e-003, -6.072873e-003, -9.267406e-003, -1.133388e-002, -2.039293e-002, -2.204365e-002, -3.037213e-002, -2.061744e-002, -6.076584e-003, -7.920253e-004, 7.801910e-003, 3.181623e-003, 1.739542e-002, 1.693111e-003, -1.317063e-002, 5.449841e-003, 3.156217e-003, -2.031706e-003, 2.164746e-002, 2.332223e-002, 6.573479e-003, 9.141707e-004, -3.382221e-003, -1.685916e-002, -3.342058e-002, -3.719728e-002, -1.832976e-002, 1.366557e-002, 3.584741e-002, 3.886303e-002, 2.828755e-002, 9.310905e-003, -9.515697e-003, -1.670342e-002, -1.402386e-002, 2.027853e-003, 6.213381e-003, 2.769420e-003, -9.603793e-004, -1.686233e-002, -1.965206e-002, -9.478544e-003, 2.998084e-003, 1.991353e-002, 3.204218e-002, 3.076605e-002, 1.582675e-002, -1.410010e-002, -2.390689e-002, -1.512847e-002, -4.092204e-002, -3.312683e-002, -2.676203e-002, -2.488746e-002, -1.445347e-002, -5.922397e-003, 4.401703e-003, 2.713721e-003, 6.446095e-003, -1.644223e-002, -1.698636e-002, 1.607102e-003, -9.681383e-003, 4.856276e-003, 2.744528e-002, 2.123984e-002, 1.697930e-002, 2.076104e-002, 1.244808e-002, -8.640264e-003, -2.978054e-002, -3.002536e-002, 1.788871e-003, 3.425110e-002, 5.490751e-002, 5.412136e-002, 3.903308e-002, 1.715671e-002, -2.339782e-003, -6.159271e-003, 4.436933e-003, 2.217696e-002, 2.926565e-002, 2.938951e-002, 2.799352e-002, 2.157940e-002, 1.567735e-002, 1.452082e-002, 1.696392e-002, 2.368950e-002, 3.375903e-002, 2.991214e-002, 1.443700e-002, -1.237489e-002, -2.882790e-002, -1.952977e-002, -3.716834e-002, -4.724872e-002, -1.842606e-002, -1.087791e-002, -1.186869e-002, -1.456648e-002, -4.793206e-003, -5.062464e-003, -9.576906e-003, -2.471499e-002, -1.152234e-002, -1.560200e-003, -9.080320e-003, 1.026048e-002, 2.923890e-002, 2.397866e-002, 2.724512e-002, 2.521501e-002, 1.085940e-002, -1.430390e-002, -2.762591e-002, -1.756912e-002, 1.246596e-002,

© ISO/IEC 2004 — All rights reserved


Copyright International Organization for Standardization
Provided by IHS under license with ISO
No reproduction or networking permitted without license from IHS
Not for Resale

3.756947e-002, 5.006831e-002, 4.114219e-002, 2.480123e-002, 3.967750e-003, -7.786648e-003, -7.254133e-003, 6.110952e-003, 2.433733e-002, 3.131043e-002, 3.336717e-002, 3.354105e-002, 2.910971e-002, 2.628662e-002, 3.357042e-002, 3.413176e-002, 3.525047e-002, 3.729973e-002, 2.629680e-002, 1.473695e-002, -8.889068e-003, -3.205194e-002, -2.382366e-002, -1.648272e-002, -3.566597e-002, -2.031806e-002, 1.422850e-002, -5.747869e-003, -1.877343e-002, -3.077386e-002, -1.961100e-002, -2.014681e-002, -2.542921e-002, -2.536427e-003, -4.751291e-003, -8.850680e-003, 1.202753e-002, 2.633636e-002, 2.095168e-002, 2.240428e-002, 1.679755e-002, -9.468727e-003, -3.011963e-002, -3.119809e-002, -1.425547e-002, 1.484389e-003, 2.027273e-002, 2.562667e-002, 1.530618e-002, -2.486901e-003, -1.914384e-002, -2.784888e-002, -2.217742e-002, -5.212900e-003, 1.328862e-002, 1.747250e-002, 2.097211e-002, 2.163801e-002, 1.886097e-002, 1.626037e-002, 2.285031e-002, 3.443539e-002, 3.637465e-002, 3.653227e-002, 2.564004e-002, 1.034042e-002, -2.598839e-004, -1.903937e-002, -2.181715e-002, -1.251030e-003, -9.644035e-003, -1.644018e-002, 2.416773e-002, 2.705608e-003, -2.105666e-002, -3.602568e-002, -2.125101e-002, -1.916559e-002, -2.212827e-002, 4.137307e-003, -1.230360e-002, -7.114197e-003, 7.384465e-003, 1.841176e-002, 1.353725e-002, 7.676429e-003, -1.382762e-002, -4.201188e-002, -4.931566e-002, -3.837732e-002, -1.958110e-002, -6.377331e-003, 7.353627e-003, 5.607688e-003, -1.229117e-002, -3.384550e-002, -4.334016e-002, -4.849663e-002, -3.751954e-002, -2.096315e-002, -4.997139e-003, -5.760863e-003, -6.534806e-003, -6.607800e-003, -7.192085e-003, -8.863982e-003, -8.568907e-004, 1.498502e-002, 1.930329e-002, 1.976077e-002, 1.905026e-002, 2.653174e-003, -7.342862e-003, -8.068982e-003, -7.554062e-003, 7.083532e-003, 1.862602e-002, -4.323940e-003, 2.942676e-002, 8.611518e-003, -2.485275e-002, -3.994495e-002, -1.201316e-002, -1.331938e-002, -8.784955e-003, 7.929483e-003, -1.307950e-002, -1.220524e-002, 1.150998e-003, 7.278067e-003, 2.840469e-003, -1.337229e-002, -4.244970e-002, -5.840712e-002, -5.163707e-002, -3.075672e-002, -1.112738e-002, 4.583792e-003, 9.953007e-003, 5.816213e-003, -1.700729e-002, -4.081243e-002, -5.188293e-002, -5.033296e-002, -4.300634e-002, -2.914600e-002, -2.035838e-002, -2.217727e-002, -2.619375e-002, -2.969096e-002, -2.852960e-002, -3.115582e-002, -2.032110e-002, -2.065718e-003, 4.910638e-003, 1.352267e-003, 3.900725e-003, -8.685411e-003, -2.245128e-002, 2.607659e-003, 1.732973e-002, 1.088242e-002, 3.457783e-002, 1.839147e-002, 3.234703e-002, 8.500361e-003, -2.121194e-002, -3.183444e-002, -4.190424e-003, -1.743795e-003, -1.592930e-003, 6.481054e-003, -1.928932e-002, -1.808865e-002, 1.382290e-005, -1.410573e-003, -4.264818e-003, -2.324882e-002, -4.484162e-002, -4.889732e-002, -3.074209e-002, -9.398273e-003, 1.007445e-002, 2.747179e-002, 3.139562e-002, 2.061417e-002, -2.783605e-003, -2.263944e-002, -3.075117e-002, -2.921441e-002, -2.634332e-002, -2.137709e-002, -2.042520e-002, -2.696585e-002, -3.336246e-002, -3.400221e-002, -3.413275e-002, -3.330326e-002, -2.292426e-002, -4.933730e-003, -1.679622e-003, -1.337961e-002, -1.354001e-002, -1.833675e-002, -2.807377e-002, 5.860914e-003, 3.373098e-002, 8.892950e-003, 3.703885e-002, 3.275358e-002, 3.622874e-002, 2.804739e-003, -1.026475e-002, -1.439483e-002, 8.855569e-003, 7.567513e-003, 7.282291e-003, 6.139736e-003, -2.021297e-002, -1.693804e-002, 3.397044e-003, -1.086884e-003, -4.674960e-003, -1.684659e-002, -2.832385e-002, -2.062386e-002, -1.189295e-003, 1.623970e-002, 3.323321e-002, 4.854397e-002, 5.000748e-002, 3.584017e-002, 1.475947e-002, 2.267336e-003, 4.271434e-004, 3.025293e-003, 4.113374e-003, 3.620785e-003, -3.479073e-003, -1.258412e-002, -2.234760e-002, -2.379238e-002, -2.053344e-002, -1.744614e-002, -1.127960e-002, 1.995839e-003, 5.906717e-003, -8.171755e-003, -1.781956e-002, -2.007232e-002, -2.490492e-002, 8.059739e-003, 3.252488e-002, 2.596913e-003, 3.160205e-002, 3.975675e-002, 3.314179e-002, -9.816440e-004, 9.723105e-003, 1.045658e-003, 1.681169e-002, 1.242481e-002, 1.075168e-002, 6.587531e-003, -2.216676e-002, -1.797363e-002, 4.667387e-003, 8.314024e-004, 3.012493e-003, -1.524534e-003, -1.536547e-003, 1.061331e-002, 2.613833e-002, 3.720165e-002, 4.738335e-002, 5.220214e-002, 4.893337e-002, 3.824354e-002, 2.615518e-002, 1.807300e-002, 2.008623e-002, 2.534487e-002, 2.739486e-002, 2.603432e-002, 2.018234e-002, 8.928453e-003, -3.986931e-003, -5.601027e-003, 2.047822e-004, 5.259645e-003, 9.466630e-003, 1.629251e-002, 1.750109e-002, 3.368865e-003, -1.199326e-002, -1.317109e-002, -1.987531e-002, 9.648387e-003, 2.484102e-002, -4.504892e-003, 1.799558e-002, 2.792160e-002, 2.218677e-002, -3.094854e-003, 2.359247e-002, 1.332016e-002, 1.617377e-002, 9.589938e-003, 2.753211e-003, 9.551825e-004, -2.484702e-002, -1.677745e-002, 1.275549e-003, 2.018551e-003, 1.097657e-002, 1.508549e-002, 1.670195e-002, 2.157449e-002, 2.691712e-002, 3.041230e-002, 3.213330e-002, 3.118359e-002, 2.765253e-002, 2.242193e-002, 1.822887e-002, 1.977285e-002, 2.640366e-002, 3.153838e-002, 3.262018e-002, 3.373394e-002, 3.016345e-002, 1.619794e-002, -2.628922e-003, -8.605297e-003, -1.019751e-003, 1.011470e-002, 1.350519e-002, 2.675813e-002, 3.420868e-002, 1.962066e-002, -3.210008e-003, -8.297567e-003, -1.179333e-002, 4.726687e-003, 7.817645e-003, -1.168166e-002, 4.190858e-003, 5.477314e-003, 9.198707e-003, -3.796478e-003, 3.010941e-002, 1.347112e-002, 8.425774e-003, -1.034821e-002, -1.938641e-002, -8.526379e-003, -2.403840e-002, -1.545572e-002, -3.342436e-003, 4.198548e-003, 1.393261e-002, 1.174809e-002, -2.212320e-003, -8.702191e-003, -7.797766e-003, -6.206403e-003, -6.321612e-003, -4.065281e-003, -3.122256e-003, -8.684106e-003, -1.119876e-002, -3.800819e-003, 6.606137e-003, 1.157105e-002, 1.726324e-002, 1.876007e-002, 2.297489e-002, 1.006335e-002, -8.339709e-003, -1.801693e-002, -1.790340e-002, -1.415363e-002, -1.065049e-002, 1.852444e-003,


© ISO/IEC 2004 — All rights reserved

Copyright International Organization for Standardization
Provided by IHS under license with ISO
No reproduction or networking permitted without license from IHS
Not for Resale

2.819823e-002, 3.175156e-002, 6.950021e-003, -1.065785e-003, -2.087423e-003, -1.619804e-003, -8.362307e-003, -2.092089e-002, -7.184996e-003, -1.811422e-002, -8.809118e-003, -7.847442e-004, 2.685579e-002, 1.987614e-003, -6.437163e-003, -2.642599e-002, -3.942266e-002, -1.452488e-002, -1.685186e-002, -1.262397e-002, -7.649738e-003, 9.999768e-003, 1.012604e-002, -1.980138e-002, -4.238617e-002, -3.495524e-002, -1.603698e-002, 6.952451e-004, 1.391562e-002, 1.923578e-002, 1.156849e-002, -7.932308e-003, -2.536329e-002, -2.654658e-002, -1.705001e-002, -9.074908e-003, -3.385372e-003, 5.511230e-003, 2.271927e-002, 3.061987e-002, 3.160673e-002, 2.797837e-002, 1.454076e-002, -9.440983e-003, -3.211846e-002, -4.205553e-002, -2.660208e-002, 6.954059e-003, 1.027856e-002, -1.157546e-003, 5.108784e-003, -5.105577e-004, -1.202425e-002, -2.232871e-002, -1.149763e-002, -3.005168e-002, -2.342407e-002, -2.212268e-003, 1.660449e-002, -1.448547e-002, -1.733070e-002, -2.706237e-002, -4.435755e-002, -7.060346e-003, -6.939697e-003, -9.016016e-003, -1.333000e-002, 1.283576e-002, 1.792951e-003, -2.962785e-002, -3.625949e-002, -3.012439e-002, -2.149079e-002, -1.410506e-002, 2.182067e-003, 2.058771e-002, 2.247497e-002, 3.828385e-003, -3.248405e-002, -4.388533e-002, -3.313647e-002, -2.254774e-002, -1.495995e-002, 2.071887e-003, 2.991062e-002, 4.516027e-002, 5.162188e-002, 5.303987e-002, 4.142734e-002, 3.016226e-002, 1.211448e-002, -1.779164e-002, -4.826198e-002, -4.637042e-002, -1.577264e-002, -3.739589e-003, 8.098336e-003, 2.185011e-003, -6.165895e-003, -2.190582e-002, -8.796710e-003, -3.279604e-002, -2.499418e-002, 1.367802e-003, 1.112696e-002, -2.068045e-002, -2.405205e-002, -4.743641e-003, -2.645823e-002, 4.214538e-003, 5.635652e-003, -6.694673e-003, -1.486148e-003, 1.489501e-002, 1.530146e-002, 2.232915e-002, 3.596280e-002, 3.655104e-002, 2.481056e-002, 4.044848e-003, -2.274255e-002, -3.130369e-002, -3.092882e-002, -3.131546e-002, -4.476142e-002, -4.690224e-002, -2.863506e-002, -2.107881e-002, -2.060785e-002, -1.433807e-002, -7.632762e-003, -1.785588e-002, -1.073352e-002, 5.847260e-003, 2.802537e-002, 5.059156e-002, 6.021492e-002, 5.992294e-002, 2.755871e-002, -1.392351e-002, -2.383377e-002, -7.982931e-003, 5.070643e-003, 7.866097e-003, 1.786991e-003, -1.853364e-002, 5.661574e-003, -2.433023e-002, -1.422628e-002, 1.475053e-002, -1.402704e-002, -2.052174e-002, -9.033254e-003, 2.380436e-002, -4.295265e-003, 1.912468e-002, 2.398006e-002, 9.426308e-003, 1.965553e-002, 2.018237e-002, 2.869115e-002, 5.154211e-002, 4.614612e-002, 2.430813e-002, 1.729468e-002, 2.188535e-002, 1.165342e-002, -4.593473e-003, -1.782063e-002, -2.382633e-002, -1.710332e-002, -1.421781e-002, -6.870697e-003, -4.503631e-003, -6.226148e-003, -1.290677e-002, -2.635310e-002, -2.766034e-002, -1.120201e-002, -2.998188e-003, 3.799197e-003, 6.148616e-003, 1.478936e-002, 3.759933e-002, 4.928249e-002, 3.204105e-002, 1.829632e-003, -3.566357e-003, -1.739386e-004, 1.023414e-002, 1.748962e-002, -5.551398e-003, 2.288863e-002, -3.823057e-003, 1.718940e-003, 2.605503e-002, -1.988128e-002, -2.118472e-002, 5.342041e-003, 4.544892e-002, 1.718680e-002, 3.519152e-002, 3.780109e-002, 2.404502e-002, 3.578716e-002, 1.703227e-002, 1.073698e-002, 9.534290e-003, -2.965767e-002, -5.096024e-002, -2.012068e-002, 1.939281e-002, 3.170900e-002, 1.681940e-002, 4.099061e-003, -2.638890e-003, 2.082011e-002, 3.265745e-002, 1.425896e-002, 6.076997e-004, 2.167546e-003, -7.146736e-003, -2.388141e-002, -2.782602e-002, -1.437675e-002, -9.623152e-003, -2.979223e-003, -1.969971e-002, -4.506571e-002, -4.004872e-002, 2.169563e-003, 3.224307e-002, 2.406212e-002, 2.114962e-002, 6.805136e-003, 2.462302e-002, 4.498803e-002, 2.365893e-002, 3.923948e-002, 1.883037e-002, 2.566821e-002, 2.629166e-002, -1.528624e-002, -2.034858e-002, 1.373601e-002, 5.865452e-002, 2.567211e-002, 2.228604e-002, 1.248773e-002, -7.412470e-003, 1.169141e-003, -2.455108e-002, -2.252015e-002, -1.952205e-002, -4.665134e-002, -3.115237e-002, 1.681969e-002, 2.035147e-002, 1.277253e-002, -2.994850e-003, -9.918869e-004, 4.821877e-003, 2.589205e-002, 3.621571e-002, 1.101200e-002, -1.842002e-003, 1.164367e-003, -2.126144e-002, -4.399807e-002, -4.933367e-002, -3.071254e-002, -2.325415e-002, -5.833419e-003, 4.230694e-003, -1.529745e-002, -5.455414e-002, -3.342210e-002, 1.508179e-002, 2.300180e-002, 2.726911e-002, 1.601234e-002, 1.113969e-002, 3.569773e-002, 1.963086e-002, 2.877564e-002, 1.409212e-002, 2.943001e-002, 2.860780e-002, -1.876920e-002, -1.828746e-002, 1.474284e-002, 3.557146e-002, -5.040475e-003, -7.912833e-003, -1.148384e-002, -2.197499e-002, -1.071890e-002, -4.163281e-002, -2.779214e-002, -1.458241e-002, -1.466891e-002, -1.733986e-002, -1.514447e-002, -2.153308e-002, -3.189673e-002, -4.048363e-002, -2.264520e-002, -4.719311e-003, 1.842434e-003, 1.764799e-003, -2.085840e-002, -3.837231e-002, -2.305287e-002, -2.599816e-002, -4.498612e-002, -5.646591e-002, -3.343295e-002, -3.398544e-002, -3.341809e-002, -2.291604e-002, -2.954860e-002, -2.764861e-002, -3.466975e-002, -1.684294e-002, -8.893963e-003, 3.363859e-003, -4.116916e-003, -2.511014e-002, -1.922865e-003, -1.490855e-002, -7.283764e-003, -2.222501e-003, 1.071600e-002, 5.834583e-003, -9.839817e-003, -9.088893e-003, 2.026526e-002, 1.176232e-002, -1.876845e-002, -2.078126e-002, -1.922725e-002, -1.807240e-002, -1.579568e-003, -3.852493e-002, -2.573250e-002, 4.467838e-003, 1.340008e-002, 1.152762e-002, 8.727168e-003, 8.703784e-003, 3.069105e-003, -4.425903e-004, -4.316213e-004, -9.033989e-003, -1.975846e-002, -2.708328e-002, -3.645845e-002, -4.760802e-002, -4.450073e-002, -1.723266e-002, -1.985904e-002, -2.572567e-002, -8.351266e-003, 1.881623e-003, 1.896401e-002, 3.005563e-002, 1.993276e-002, 1.443676e-002, -1.038643e-002, -2.619513e-002, -2.386829e-002, -1.133954e-002, -9.942368e-003, -2.422414e-002, -1.554685e-002, -3.956512e-002, -2.774553e-002, -1.180631e-002, -1.218186e-002, -1.861308e-002, -5.323822e-003, -1.409922e-003, 1.152169e-002, -5.807279e-003, -

© ISO/IEC 2004 — All rights reserved


Copyright International Organization for Standardization
Provided by IHS under license with ISO
No reproduction or networking permitted without license from IHS
Not for Resale

2.566900e-002, -1.999979e-002, -1.599042e-002, -9.100943e-003, 7.274222e-003, -2.482598e-002, -2.908809e-002, -1.763137e-003, 1.327552e-002, 2.275794e-002, 2.837788e-002, 2.650080e-002, 1.845084e-002, 5.615088e-003, -7.463958e-003, -1.259506e-002, -2.772573e-002, -3.995276e-002, -3.271342e-002, -4.264380e-002, -4.984798e-002, -2.418065e-002, 3.727958e-003, -1.107657e-002, -7.359852e-004, 2.029625e-002, 3.790383e-002, 4.757792e-002, 4.420012e-002, 2.961547e-002, 3.110161e-003, -1.526229e-002, -1.733085e-002, -5.503516e-003, -4.577879e-003, -1.826833e-002, -1.143783e-002, -3.290924e-002, -2.663385e-002, -2.922850e-003, -2.276918e-002, -2.737224e-002, 7.265421e-003, 7.234179e-003, 3.250329e-003, -1.196849e-002, -2.474558e-002, -1.444862e-002, -8.014699e-003, -2.811766e-003, 9.619842e-003, -1.856950e-002, -2.136136e-002, -1.340501e-002, -1.054065e-002, -1.146545e-002, -1.168815e-002, -1.678866e-002, -2.594482e-002, -3.135385e-002, -1.931996e-002, -7.667792e-003, -2.656647e-002, -3.197860e-002, -2.428986e-002, -3.312782e-002, -3.738089e-002, -3.207726e-002, 1.847307e-002, 1.518621e-002, -6.686440e-003, -1.976879e-003, 1.033112e-002, 1.810139e-002, 2.219374e-002, 1.844839e-002, 3.850340e-003, -1.730542e-003, -4.204193e-003, 1.257191e-003, 4.875877e-003, -1.712704e-002, 2.303071e-003, -2.141658e-002, -9.292131e-003, 7.647069e-003, -1.993271e-002, -2.980880e-002, 1.493254e-002, 1.059775e-002, -1.019544e-002, -1.694963e-002, -2.084263e-002, -4.644425e-003, -1.564968e-003, 3.326277e-003, 8.554089e-003, -7.761595e-003, -8.098771e-003, -1.334559e-002, -2.393914e-002, -3.694564e-002, -4.260512e-002, -4.737453e-002, -4.664746e-002, -3.113865e-002, -4.770432e-003, 7.102416e-004, -9.417551e-003, -5.940316e-003, -5.906613e-003, -1.342277e-002, -1.521800e-002, -1.981726e-002, 1.983955e-002, 4.126576e-002, 2.043572e-002, -2.664254e-003, -6.513634e-003, -2.584163e-003, 2.082619e-003, 6.003464e-003, 2.848892e-003, -7.198639e-004, -3.186730e-003, 8.756046e-003, 3.373885e-003, -1.434070e-002, 3.826122e-003, -6.338818e-003, 1.088403e-002, 1.383627e-002, -1.111718e-002, -1.578164e-002, 1.197256e-002, -1.706705e-003, -1.929378e-002, -1.595224e-002, -2.033979e-002, -2.806309e-003, 5.985979e-003, 1.338653e-002, 2.387760e-003, -1.188944e-003, 3.993013e-003, -2.891004e-003, -1.087141e-002, -2.806029e-002, -3.290860e-002, -3.195758e-002, -1.845761e-002, 3.750105e-003, 2.317670e-002, 1.201422e-002, 1.600524e-002, 1.806874e-002, 1.832352e-002, 1.051452e-002, 9.932150e-003, -2.828308e-004, 1.266722e-002, 5.347011e-002, 5.710429e-002, 3.385741e-002, 1.546116e-002, 4.302817e-003, 5.619425e-003, 1.199643e-002, 9.203403e-003, 2.080568e-003, -5.619222e-003, 6.415679e-003, 4.369885e-004, -6.607041e-003, -2.785183e-003, 5.698419e-003, 2.159057e-002, 1.337410e-002, 2.635012e-004, -2.967591e-004, 2.059546e-002, 1.129265e-003, -1.090998e-002, -1.078532e-002, -2.416570e-002, -1.302189e-002, 1.491489e-002, 1.796456e-002, -2.343960e-003, -6.526464e-003, 9.248386e-003, 1.012666e-002, 2.311256e-003, -1.906155e-003, -2.307936e-003, 6.039303e-003, 2.576739e-002, 3.985415e-002, 2.813613e-002, 1.277123e-003, 2.071357e-002, 3.070408e-002, 2.774586e-002, 2.395992e-002, 2.493688e-002, 1.920260e-002, 4.076057e-003, 2.766928e-002, 7.130697e-002, 6.943575e-002, 4.861606e-002, 3.443378e-002, 2.365645e-002, 1.918358e-002, 8.834562e-003, -7.640578e-003, -1.318043e-002, -1.976585e-003, -2.772596e-004, -5.594356e-004, 1.251658e-003, 1.289328e-002, 1.838592e-002, 1.162288e-002, 1.165461e-002, 1.904364e-002, 2.107578e-002, 1.107795e-002, 6.866585e-003, 6.692327e-003, -1.051977e-002, -1.644470e-002, 1.963534e-002, 2.432798e-002, -7.198043e-003, -1.325979e-002, 3.808067e-004, 1.016634e-002, 1.006526e-002, 9.754461e-003, 1.640404e-002, 2.780014e-002, 3.643430e-002, 2.766685e-002, -8.039480e-003, -1.407939e-002, 2.904758e-002, 3.541033e-002, 2.819710e-002, 1.961230e-002, 2.466789e-002, 3.642759e-002, 8.910170e-003, -1.591403e-003, 3.283352e-002, 6.004824e-002, 5.631824e-002, 3.962574e-002, 2.471686e-002, 8.456092e-003, -1.147488e-002, -2.482281e-002, -1.981855e-002, -5.999431e-003, 2.379865e-003, 7.904629e-003, 1.396462e-002, 1.027847e-002, 1.298560e-002, 1.128908e-002, 1.513215e-002, -9.107750e-004, 2.159402e-002, 2.495613e-002, 2.665794e-002, 2.526368e-002, 1.051586e-002, -7.814970e-003, 2.185185e-002, 1.952179e-002, -1.393864e-002, -2.306851e-002, -1.084158e-002, 3.482864e-003, 5.381763e-003, 8.841103e-003, 1.601466e-002, 1.964858e-002, 1.819698e-002, -7.394333e-003, -4.286466e-002, -2.696097e-002, 4.940607e-003, 7.599440e-004, 1.479860e-002, 1.568021e-002, 1.118687e-002, 1.792469e-002, 4.365850e-004, -2.812285e-002, -2.044392e-002, 1.373154e-002, 2.432672e-002, 1.516764e-002, 1.042136e-003, -1.340801e-002, -2.650442e-002, -3.071876e-002, -1.670892e-002, -3.600027e-003, 6.037294e-003, 1.610530e-002, 2.060352e-002, 6.841588e-004, 1.210384e-002, 1.418970e-002, 1.890511e-002, -1.056912e-002, 8.774859e-003, 2.793069e-002, 3.980597e-002, 4.369589e-002, 2.373761e-002, 5.178117e-003, 2.106791e-002, 1.711958e-002, -1.953534e-002, -2.655891e-002, -1.313271e-002, 1.696155e-003, 4.761884e-003, 9.277606e-003, 1.205947e-002, 1.701152e-002, 1.252503e-002, -1.644372e-002, -5.400788e-002, -5.030723e-002, -4.023955e-002, -2.016953e-002, 2.634345e-002, 3.538142e-002, 1.183387e-002, -1.154353e-002, -1.736636e-002, -3.788366e-002, -4.497387e-002, -1.743303e-002, 4.775016e-003, 9.314695e-003, -1.884838e-004, -1.547510e-002, -2.476230e-002, -2.355332e-002, -7.843060e-003, 3.741141e-003, 1.233197e-002, 9.613307e-003, 7.622781e-003, -7.294030e-003, 8.809021e-003, 6.116601e-003, 1.045185e-002, -1.153280e-002, -8.071179e-003, 1.203248e-002, 2.498337e-002, 3.398218e-002, 2.292516e-002, 8.203108e-003, 1.832977e-002, 9.145241e-003, -2.448403e-002, -2.195005e-002, -5.819665e-003, 7.962422e-003, 1.300196e-002, 2.244710e-002, 2.869043e-002, 2.972968e-002, 1.854254e-002, 2.591841e-004, -2.147083e-002, -2.489888e-002, -


© ISO/IEC 2004 — All rights reserved

Copyright International Organization for Standardization
Provided by IHS under license with ISO
No reproduction or networking permitted without license from IHS
Not for Resale

8.430054e-003, 2.013077e-002, 5.563606e-002, 5.870470e-002, 3.551155e-002, -6.965213e-003, -1.584293e-002, -2.691058e-002, -3.694396e-002, -2.476542e-002, -7.916104e-003, 7.099273e-003, 6.179503e-003, -7.433870e-003, -1.067667e-002, -8.922052e-003, 2.526952e-003, 9.449147e-003, 1.049609e-002, -2.827381e-003, -8.768512e-003, -5.383768e-003, -5.629318e-003, -8.193126e-003, 8.017131e-003, -1.364667e-002, -2.174505e-002, -1.417294e-002, -2.775088e-003, 1.028889e-002, 1.076345e-002, 2.905991e-003, 6.245243e-003, -5.335862e-003, -1.835994e-002, -1.861161e-002, 3.652508e-003, 1.886019e-002, 2.217725e-002, 3.036041e-002, 3.601308e-002, 3.388180e-002, 2.482704e-002, 1.879296e-002, 1.639762e-002, 6.814427e-003, 3.479992e-003, 1.069811e-002, 2.101609e-002, 1.999224e-002, 9.082178e-003, -1.162317e-002, -2.204590e-002, -2.217294e-002, -1.911216e-002, -1.687657e-002, -9.276502e-003, -7.593899e-004, 4.044498e-003, -2.216002e-003, 1.284284e-004, 3.990495e-003, 1.344037e-002, 1.093858e-002, 9.689270e-003, 4.462791e-003, 7.204297e-005, 2.398780e-003, -1.380070e-002, -1.159909e-002, 7.770049e-003, -2.620697e-002, -1.780854e-002, -2.781466e-002, -3.158170e-002, -2.267871e-002, -8.587414e-003, 1.669612e-003, -2.369213e-004, -1.007785e-002, -1.277519e-002, -1.720701e-002, 8.560389e-003, 2.576948e-002, 2.702631e-002, 2.878317e-002, 2.673621e-002, 2.168833e-002, 1.707637e-002, 1.698201e-002, 2.217936e-002, 1.133101e-002, -2.637125e-003, -4.118983e-003, -9.129597e-003, -2.557700e-002, -3.221472e-002, -3.245809e-002, -3.116156e-002, -1.967478e-002, -1.676880e-002, -1.657903e-002, -1.467296e-002, -1.309751e-002, -8.650176e-003, -3.970316e-003, 3.113339e-003, 5.819534e-003, 1.078287e-002, 4.386240e-003, 8.927688e-003, 1.233001e-002, 1.113505e-002, -1.930149e-003, -1.848214e-002, 9.842199e-004, 1.457073e-002, -2.858560e-002, -2.747796e-003, -4.198162e-003, -3.987898e-002, -4.487564e-002, -3.250805e-002, -1.344204e-003, 3.702400e-003, -1.818404e-002, -6.592485e-003, -9.301984e-003, 7.451834e-003, 2.711909e-002, 2.136183e-002, 1.325485e-002, 4.537386e-003, 1.732745e-003, 2.523853e-003, 6.435460e-003, 2.164373e-002, 2.653234e-002, 2.392438e-002, 1.832363e-002, 7.227351e-003, -1.051246e-002, -1.342146e-002, -1.433685e-002, -2.029246e-002, -1.636516e-002, -1.510841e-002, -2.001974e-002, -2.342404e-002, -2.325275e-002, -2.293954e-002, -1.198824e-002, 3.379428e-003, 2.583519e-003, 4.666797e-003, -1.731377e-003, 1.584793e-002, 2.186729e-002, 1.628973e-002, -7.449743e-003, -1.451354e-002, 6.770535e-003, 1.944033e-002, -2.130605e-002, 1.078875e-002, 2.860892e-003, -2.430448e-002, -4.832703e-002, -4.941460e-002, -2.121165e-002, -4.812429e-004, -2.180065e-002, -5.394114e-003, 5.013575e-003, 2.945204e-003, 1.936316e-002, 9.621636e-003, -1.174793e-002, -2.573633e-002, -2.632310e-002, -1.013108e-002, 6.330842e-003, 1.876495e-002, 1.972507e-002, 1.088841e-002, 5.947818e-003, -1.300726e-003, -9.682285e-003, -6.279553e-003, -8.054579e-003, -1.740317e-002, -1.865778e-002, -1.790475e-002, -2.192761e-002, -2.280111e-002, -2.805879e-002, -3.015549e-002, -1.639481e-002, -9.180275e-004, -2.860332e-003, 1.519909e-004, -2.976888e-003, 1.669892e-002, 1.760164e-002, 1.590200e-002, -1.764693e-003, -6.698587e-003, 4.981061e-003, 2.023743e-002, -1.513659e-002, 1.538923e-002, 1.553918e-002, 2.379242e-004, -2.934369e-002, -4.636235e-002, -2.780576e-002, -6.018138e-003, -2.164269e-002, -1.472349e-002, 1.645727e-002, 4.392046e-003, 6.621743e-003, -3.645272e-004, -2.842952e-002, -4.276312e-002, -2.897816e-002, 5.936310e-003, 1.990546e-002, 2.335237e-002, 1.010292e-002, -7.891627e-003, -1.705366e-002, -2.073627e-002, -1.773131e-002, -1.253717e-002, -1.300130e-003, 1.169465e-002, 7.448179e-003, 3.643909e-003, -9.283718e-004, -1.563132e-002, -2.315264e-002, -2.561859e-002, -1.488322e-002, -2.794729e-003, -6.019758e-003, -9.462185e-003, -5.527969e-003, 1.038725e-002, 1.307269e-002, 4.997084e-003, -5.486818e-004, -3.109454e-003, 2.976980e-003, 2.226810e-002, -1.071894e-002, 1.999027e-002, 3.258841e-002, 2.935239e-002, 5.467172e-003, -2.284705e-002, -2.061428e-002, -7.690109e-003, -1.934250e-002, -2.727106e-002, 3.250376e-002, 1.526517e-002, -4.765135e-003, -8.064179e-003, -3.145392e-002, -4.475540e-002, -1.949275e-002, 8.147213e-003, 2.113155e-002, 2.307868e-002, 1.724303e-002, 6.305369e-003, -1.773563e-004, 8.355056e-004, 5.856828e-003, 8.874013e-003, 6.595492e-003, 1.540368e-002, 2.428797e-002, 2.735473e-002, 2.538099e-002, 1.321980e-002, -2.642066e-003, -9.059896e-003, -6.850925e-003, -2.702235e-003, -1.144838e-002, -1.575830e-002, -3.168709e-003, 2.356057e-003, 1.342931e-002, 3.873602e-004, -1.325258e-003, -3.396872e-003, 1.926503e-003, 1.424396e-002, -7.278208e-003, 2.047915e-002, 3.669942e-002, 4.119303e-002, 3.336613e-002, 9.493603e-003, -2.767924e-003, 4.800809e-004, -1.399245e-002, -3.229586e-002, 3.600031e-002, 3.318554e-002, -7.639056e-003, -1.096290e-002, -2.642129e-002, -3.764489e-002, -1.480235e-002, -1.425074e-003, 3.384200e-003, 2.919944e-003, 6.009315e-003, 8.374496e-003, 1.094606e-002, 8.687208e-003, 5.278402e-004, -6.893762e-003, -1.634527e-002, -2.328515e-002, -2.506258e-002, -1.950597e-002, -4.906414e-003, 1.213663e-002, 8.379690e-003, 5.380542e-004, -6.574592e-004, -5.051664e-003, -2.095847e-002, -2.003452e-002, -4.998041e-003, -3.274543e-003, 5.265854e-003, -1.320816e-002, -3.673316e-003, 5.881640e-004, 4.890080e-003, 1.398267e-002, -4.258285e-003, 7.505603e-003, 1.782207e-002, 3.238186e-002, 4.258174e-002, 3.161774e-002, 2.088052e-002, 1.390095e-002, 8.581555e-003, -1.747891e-002, 2.860137e-002, 4.544194e-002, 1.580251e-003, -1.183527e-002, -1.209524e-002, -1.130991e-002, 1.518370e-003, 1.526520e-002, 2.409202e-002, 1.785352e-002, 6.283316e-003, -5.477643e-004, -2.078012e-004, -4.457268e-003, -1.087172e-002, -1.145397e-002, -9.683957e-003, -1.791813e-002, -2.048582e-002, -1.000550e-002, 1.297047e-003, 1.300984e-002, 1.721937e-002, 7.277769e-003, 2.186478e-003, -1.278312e-002, -2.287545e-002, -

© ISO/IEC 2004 — All rights reserved


Copyright International Organization for Standardization
Provided by IHS under license with ISO
No reproduction or networking permitted without license from IHS
Not for Resale

9.739864e-003, -7.618031e-003, 4.727662e-003, -2.246393e-003, -2.997379e-002, -1.280239e-002, -2.882938e-003, -2.592132e-003, 1.451902e-002, -4.058521e-003, -1.236006e-002, -2.654726e-003, 1.516834e-002, 3.858939e-002, 4.145842e-002, 3.824920e-002, 2.369576e-002, 2.171583e-002, 9.747512e-003, 1.566609e-002, 3.171216e-002, 3.452599e-003, -6.473075e-003, -4.986326e-004, 7.102195e-003, 1.311926e-002, 3.743481e-002, 5.848769e-002, 4.501355e-002, 1.949539e-002, -4.659857e-003, -2.345512e-002, -3.343384e-002, -3.125596e-002, -2.015973e-002, -5.185007e-003, 3.874409e-003, 1.227367e-002, 1.707292e-002, 2.207623e-002, 2.685745e-002, 2.414717e-002, 1.160063e-002, -3.873777e-003, -2.157570e-002, -1.290434e-002, -1.376029e-003, -7.653097e-003, 9.674263e-003, -1.943898e-002, -2.560644e-002, -1.166494e-002, -1.127973e-002, -1.073303e-002, 9.158769e-003, -6.708025e-003, -2.398845e-002, -2.678174e-002, -1.122731e-002, 1.433646e-002, 3.315692e-002, 3.929313e-002, 1.795671e-002, 1.471420e-002, 1.922816e-002, 1.227416e-002, 5.377332e-003, 2.656161e-003, 4.796501e-004, 1.004661e-002, 1.885007e-002, 1.942716e-002, 3.309071e-002, 5.377590e-002, 5.016018e-002, 3.097901e-002, 3.100246e-003, -2.961122e-002, -4.678833e-002, -4.185737e-002, -2.499164e-002, -1.560470e-003, 1.748446e-002, 2.366980e-002, 2.467814e-002, 2.555662e-002, 2.616345e-002, 2.112297e-002, 4.668969e-003, -1.231214e-002, -1.446642e-002, 9.833815e-004, -5.019433e-003, -5.402938e-003, -3.952012e-003, -2.740881e-002, -6.268894e-003, 5.203672e-003, -1.211720e-002, -1.039934e-002, 5.225939e-003, -7.871590e-003, -2.047296e-002, -3.133046e-002, -7.563816e-003, -2.546481e-003, 1.761004e-002, 2.657458e-002, 3.924305e-003, 4.936094e-003, 1.262539e-002, 1.014853e-002, -9.756918e-003, -4.429387e-003, -9.187610e-004, 4.880591e-003, 1.701349e-002, 1.305542e-002, 1.041684e-002, 2.144083e-002, 3.386936e-002, 2.753657e-002, 7.571755e-003, -1.903896e-002, -2.966665e-002, -1.911028e-002, -4.511552e-003, 7.677693e-003, 1.478570e-002, 1.677943e-002, 1.786952e-002, 1.444909e-002, 1.164564e-002, 7.473782e-003, -8.185098e-003, -1.267553e-002, 3.893558e-003, 1.716486e-002, -1.123000e-003, 5.517099e-003, -1.399099e-002, -2.016775e-002, 1.658614e-002, 1.866110e-002, -3.247157e-004, -8.909212e-003, 7.700735e-003, -5.736430e-003, -1.224840e-002, -2.301023e-002, -1.773220e-003, -1.233942e-002, -4.085658e-003, -1.849127e-003, -8.107963e-003, -2.798301e-004, 1.153634e-002, 1.329416e-002, -1.100504e-003, -1.063526e-002, -7.015485e-003, -6.985971e-003, 4.944277e-003, 9.983640e-003, 4.930343e-004, -6.486627e-003, -1.438262e-004, 5.596045e-003, -5.607411e-005, -8.922581e-003, -1.003023e-002, -1.601660e-003, 3.462053e-003, 6.180258e-003, 6.502279e-003, 2.794379e-003, 4.163654e-003, 1.084191e-003, 1.746162e-003, -2.310908e-003, -1.262003e-002, -4.093961e-003, 1.515669e-002, 2.051718e-002, -3.414696e-004, 3.708413e-003, -2.587291e-002, -1.309562e-002, 1.804041e-002, 1.757545e-002, 4.671096e-003, -8.778853e-004, 1.361760e-002, -5.491118e-003, -4.408058e-003, -1.352258e-002, -9.551269e-005, -1.851429e-002, -2.614245e-002, -2.409776e-002, -1.427439e-002, 7.877250e-003, 3.143297e-002, 1.980947e-002, 4.850971e-003, 4.993402e-004, -5.477050e-003, -7.158428e-003, -7.893818e-003, 4.271364e-004, -4.178060e-003, -2.289071e-002, -2.759240e-002, -1.918054e-002, -1.372948e-002, -1.157228e-002, -3.470743e-003, 4.202363e-003, 3.307967e-004, -5.383148e-003, -7.316466e-003, -4.837213e-003, -7.979482e-004, -1.941302e-003, 2.644999e-003, 3.429569e-003, -3.402206e-003, 2.262070e-003, 1.032924e-002, 1.657750e-002, 2.565120e-002, 9.405793e-003, -2.324522e-002, -1.215096e-002, -2.173838e-003, -3.451055e-003, -7.182883e-003, -6.391392e-004, 1.988435e-002, -3.395553e-003, -2.395551e-003, -1.083669e-002, -1.751014e-005, -1.908616e-002, -3.189888e-002, -2.258470e-002, -5.051685e-003, 1.543348e-002, 2.631178e-002, 4.243256e-003, 1.270795e-003, 9.012846e-003, -3.466213e-003, -1.503134e-002, -1.223296e-002, -7.699063e-003, -2.512812e-003, -2.176910e-002, -3.099023e-002, -3.152137e-002, -2.297882e-002, -1.570041e-002, -7.456942e-003, -3.738692e-003, -4.628855e-003, -7.155155e-003, -5.177102e-003, -4.598764e-003, -1.987438e-003, 1.407976e-003, 1.317844e-002, 1.233455e-002, 7.236590e-003, -1.050001e-004, -6.555816e-003, 1.076552e-002, 3.442602e-002, 1.856494e-002, -4.613799e-003, 1.418340e-003, -4.478354e-003, -7.252485e-003, -1.611165e-002, -7.698478e-003, 9.813261e-003, -1.585226e-002, 6.392905e-003, -1.688052e-003, 7.519231e-003, -1.544772e-002, -1.660158e-002, -5.092345e-004, 1.092485e-002, 1.395447e-002, 4.038929e-004, -2.193123e-003, -4.067223e-003, 1.987811e-002, 1.748705e-002, 2.411126e-003, 6.399148e-003, 1.055526e-002, 1.437807e-002, 2.727409e-003, -6.862762e-003, -9.665986e-003, -5.954900e-003, -1.379490e-004, 8.015540e-003, 1.230525e-002, 1.469312e-002, 1.096935e-002, 7.525691e-003, 6.285708e-003, 2.650480e-003, 7.237682e-003, 1.726110e-002, 1.637326e-002, 1.520856e-002, 4.322273e-003, -1.206996e-002, -7.296464e-003, 6.860329e-003, 1.197520e-002, -1.571243e-003, 4.802845e-003, 1.170460e-002, 1.389407e-002, -7.871861e-003, -1.255980e-002, -7.013154e-003, -3.017980e-002, 8.654470e-003, 2.383918e-003, 9.502407e-003, -1.160507e-002, -5.468882e-004, 5.517033e-003, 9.446176e-003, -1.166013e-002, -3.215679e-002, -1.804141e-002, -9.305654e-003, 6.826028e-003, 1.550272e-002, 1.231101e-003, -5.397748e-003, 2.155002e-004, 1.232559e-002, 4.479801e-003, -9.607127e-003, -1.087222e-002, -1.237081e-002, -1.132230e-002, 1.883000e-003, 9.493518e-003, 1.049327e-002, 1.168396e-002, 1.184404e-002, 1.061645e-002, -1.727424e-003, -1.860911e-003, 1.185881e-003, -7.760399e-004, 8.432204e-003, 7.383744e-003, -9.542715e-003, -2.592526e-002, -1.919180e-002, -8.723669e-003, -1.037235e-002, -1.027417e-002, 3.441378e-003, 1.803225e-002, 1.224927e-002, 2.229000e-002, 1.092515e-002, -1.824324e-002, -4.556290e-003, -1.357776e-002, -1.800812e-002, 1.543577e-002, 3.428995e-002, 1.113939e-002, -


© ISO/IEC 2004 — All rights reserved

Copyright International Organization for Standardization
Provided by IHS under license with ISO
No reproduction or networking permitted without license from IHS
Not for Resale

1.129106e-002, -2.457705e-002, -2.511867e-002, -1.747029e-002, -1.478142e-002, 2.623938e-003, 1.416035e-002, 2.232146e-003, -1.183738e-002, -1.135016e-002, 3.634102e-003, 1.050371e-002, 6.646489e-003, -3.475072e-003, -1.121473e-002, -1.713788e-002, -1.496679e-002, -1.228165e-002, -6.985495e-003, -1.846361e-003, -1.842255e-004, -2.976849e-003, -8.891850e-003, -1.813587e-002, -2.253390e-002, -1.597393e-002, 6.192838e-003, 1.277602e-002, 7.335005e-003, -1.571809e-002, -1.885155e-002, -5.579515e-003, -6.798842e-003, -1.630972e-003, -3.491391e-003, -7.289902e-003, -5.558352e-003, 1.493585e-002, 2.626900e-002, 2.475695e-003, 3.702023e-003, -6.638549e-003, -3.089152e-003, 4.621626e-002, 4.282770e-002, 3.605083e-003, -2.568045e-002, -1.202687e-002, 9.525233e-003, -6.120666e-003, -1.698838e-002, -1.377825e-003, -4.567854e-003, -1.455602e-002, -1.900113e-002, -1.277691e-002, -6.631843e-003, 2.039651e-003, 6.369017e-003, 1.707909e-004, -5.864313e-003, -5.722537e-003, -2.739017e-003, 1.336250e-003, 4.177789e-003, 8.324934e-003, 7.539407e-003, -1.025081e-003, -1.474199e-002, -3.087112e-002, -3.151914e-002, -8.803464e-003, 1.019705e-002, 1.346517e-002, 1.004521e-002, 1.846214e-003, -1.506602e-003, -4.334063e-003, -1.418537e-002, -8.079638e-003, -4.798386e-003, -1.412748e-002, -2.588311e-002, -2.010277e-002, 1.155629e-003, -2.410036e-003, 1.064592e-002, -6.841753e-003, -9.001394e-003, 2.778378e-002, 1.368871e-002, -1.701162e-002, -9.139670e-003, 1.010487e-002, 1.414280e-002, 1.283639e-003, -1.922654e-002, -1.424362e-002, -2.137279e-002, -2.463144e-002, -1.326166e-002, -8.975887e-003, -1.018230e-002, -8.291898e-003, -5.725228e-003, -1.178648e-003, -2.555953e-004, 4.948389e-003, 1.006855e-002, 1.752229e-002, 2.184003e-002, 2.026609e-002, 1.368854e-002, -1.639749e-003, -1.542763e-002, -2.630267e-002, -1.770029e-002, -4.818135e-003, -2.086263e-004, -7.413582e-003, -1.621924e-003, 1.286609e-002, 1.394865e-002, 1.016874e-002, -4.972523e-003, 1.060497e-003, 1.725501e-003, -9.131380e-003, -2.481151e-002, -2.287633e-002, -6.211848e-003, -1.205611e-002, 6.415909e-003, -3.554520e-003, -2.588643e-002, -2.810194e-002, -2.398142e-002, -1.988458e-002, -3.521233e-003, -5.304378e-003, -1.905509e-002, -1.559558e-002, -7.841872e-003, -1.062706e-002, -1.277717e-002, -1.178711e-002, -7.634099e-003, -2.805877e-003, -4.835513e-003, -1.359669e-002, -2.146599e-002, -2.042564e-002, -1.363893e-002, -3.733290e-003, 6.580400e-003, 1.683676e-002, 2.418573e-002, 2.823616e-002, 2.341427e-002, 1.181962e-002, 5.555988e-003, 6.663590e-003, 8.764872e-003, 8.368766e-003, -1.043211e-002, -2.887201e-002, -8.279189e-003, 1.894987e-002, 2.225933e-002, 2.050620e-002, 8.613924e-003, 1.145487e-003, 5.712503e-003, 1.220692e-002, 7.077959e-003, 1.288736e-002, 4.426120e-002, 4.907096e-002, 2.650625e-002, 6.476967e-003, -9.685449e-003, -2.623330e-003, 8.438743e-003, 1.115495e-002, 1.253542e-002, 1.444848e-004, -6.237004e-003, 6.369914e-003, 2.350733e-002, 1.520789e-002, 8.499491e-003, 9.990326e-003, 9.689288e-003, 1.047212e-002, 1.339770e-002, 1.002710e-002, -8.889467e-004, -8.875900e-003, -8.081428e-003, -2.669382e-003, 5.503161e-003, 1.425760e-002, 2.087466e-002, 2.957467e-002, 2.920868e-002, 2.852902e-002, 3.296624e-002, 2.995575e-002, 2.491454e-002, 1.519005e-002, -1.101432e-002, -4.263536e-002, -1.510535e-002, 1.073771e-002, 1.603377e-002, 2.148077e-002, 1.091690e-002, -1.021416e-002, -1.544277e-002, -1.637203e-002, -1.688384e-002, -1.332516e-003, 3.156000e-002, 3.422473e-002},
{1.229005e-003, -7.770629e-003, -3.980027e-003, -1.166413e-002, -2.053658e-002, -1.042072e-002, 1.062413e-002, 3.286776e-002, 2.912380e-002, -2.023055e-003, -2.314929e-002, -1.568913e-002, -5.148370e-003, -1.517627e-003, -7.110193e-003, -3.795689e-003, 4.667000e-003, 9.715395e-003, 6.127682e-003, -3.275445e-003, -1.343597e-002, -2.496620e-002, -2.624354e-002, -2.417107e-002, -1.332502e-002, 4.241512e-003, 1.964078e-002, 2.294361e-002, 1.469898e-002, 4.744629e-004, -9.782274e-003, -6.973807e-003, 3.380416e-003, 1.214640e-002, 1.089892e-002, 7.533894e-003, 5.935932e-003, 5.673466e-003, 5.940537e-003, 1.150257e-002, 1.815147e-002, 3.250954e-002, 3.274612e-002, 9.732607e-003, -6.871461e-003, -2.127114e-002, -8.500070e-003, -1.067323e-002, -8.941176e-003, -1.920222e-002, -2.374946e-002, -1.375527e-002, 3.366593e-003, 1.381002e-002, 2.716603e-003, -1.973937e-002, -1.900321e-002, -1.036993e-002, -7.655849e-003, -1.373026e-002, -1.223757e-002, -9.290797e-004, 1.508426e-002, 2.129461e-002, 1.523746e-002, -1.023267e-003, -1.911128e-002, -3.436071e-002, -4.306625e-002, -4.235907e-002, -3.156697e-002, -1.054302e-002, 2.082807e-002, 4.531803e-002, 5.824025e-002, 4.735126e-002, 2.098149e-002, 1.837168e-003, -1.332432e-003, 1.098715e-002, 1.985779e-002, 1.133895e-002, -4.036925e-003, -1.913978e-002, -1.494818e-002, -7.718120e-003, -1.080356e-002, -3.680316e-003, 7.429194e-003, 4.900897e-003, -8.545096e-003, -3.105551e-002, -3.236740e-003, -7.385975e-003, -5.690502e-003, -1.389004e-002, -2.141596e-002, -1.682583e-002, -6.414430e-004, 8.694822e-004, 1.478641e-004, -3.139290e-003, -4.294499e-003, -3.499127e-003, -5.483946e-003, -9.937768e-003, -4.835307e-003, 5.714107e-003, 1.643801e-002, 1.164868e-002, -5.812574e-004, -2.081276e-002, -3.928121e-002, -5.033486e-002, -5.679753e-002, -5.748645e-002, -4.780386e-002, -2.444385e-002, 4.149286e-003, 4.123450e-002, 6.131086e-002, 6.675836e-002, 5.047482e-002, 1.805420e-002, -7.141913e-003, -1.697276e-002, -2.621080e-003, 1.089461e-002, 1.497064e-003, -1.552084e-002, -1.349406e-002, 6.244402e-003, 4.936855e-003, -1.117452e-002, -1.690180e-003, 9.641448e-003, 4.409469e-003, -2.061593e-002, 1.218145e-003, -3.768110e-003, 1.638767e-003, -1.227600e-002, -2.501174e-002, -2.123283e-002, -8.668975e-003, 5.867757e-003, 1.260221e-002, 7.365413e-003, 3.178592e-003, 8.229418e-004, -2.574979e-003, -2.510126e-003, -1.799229e-003, 6.389334e-003, 1.368466e-002, 1.352965e-002, 7.593640e-003, -4.279683e-003, -1.895532e-002, -2.409568e-002, -

© ISO/IEC 2004 — All rights reserved


Copyright International Organization for Standardization
Provided by IHS under license with ISO
No reproduction or networking permitted without license from IHS
Not for Resale

3.227525e-002, -3.895194e-002, -3.126727e-002, -1.569653e-002, 7.940524e-003, 3.809808e-002, 5.737013e-002, 5.871834e-002, 4.822772e-002, 2.562119e-002, -1.530057e-003, -2.482007e-002, -3.562722e-002, -1.573668e-002, -2.721710e-003, -7.326362e-003, -4.188615e-003, 1.777888e-002, 2.651074e-002, -2.806404e-003, -9.420497e-003, 5.150809e-003, 1.707915e-002, -5.561810e-003, 2.315318e-002, 2.013953e-002, 1.590012e-002, 3.482716e-003, -8.154770e-003, -1.986575e-002, 6.738915e-003, 2.390938e-002, 2.071295e-002, 1.509505e-002, 1.187583e-002, 1.359882e-002, 1.135282e-002, 6.581115e-004, -5.500182e-003, 6.869078e-003, 2.670272e-002, 3.390668e-002, 2.798097e-002, 1.685824e-002, 7.120921e-003, -2.733086e-003, -1.499638e-002, -2.692171e-002, -2.752254e-002, -1.704722e-002, 6.306776e-003, 3.110060e-002, 4.729495e-002, 5.098414e-002, 3.335505e-002, 6.525801e-003, -1.714169e-002, -2.775670e-002, -4.018096e-002, -4.467123e-002, -2.750970e-002, -7.673667e-003, -8.117186e-003, 6.599914e-003, 3.061054e-002, 1.778211e-002, -1.384605e-002, -1.204808e-002, 1.492090e-002, -3.994812e-004, 2.698615e-002, 1.994476e-002, 1.124900e-002, 1.007059e-002, -2.151085e-002, -3.857652e-002, -5.234424e-003, -1.094228e-002, -1.635813e-002, -1.081765e-002, -7.045692e-003, -1.342158e-002, -2.099174e-002, -2.522027e-002, -1.725279e-002, 8.561722e-004, 1.449372e-002, 1.456371e-002, 8.772039e-003, 1.177983e-003, -4.909600e-003, -1.442613e-002, -2.570077e-002, -3.774684e-002, -4.074326e-002, -3.413256e-002, -1.280456e-002, 6.323386e-003, 2.471149e-002, 3.617174e-002, 2.979921e-002, 4.256549e-003, -2.824868e-002, -4.721741e-002, -4.091272e-002, -3.215684e-002, -3.153791e-002, -1.086741e-002, -1.152419e-003, -3.711474e-003, 1.045332e-002, 1.537880e-002, -8.270428e-003, -2.291922e-002, -1.815113e-003, -8.696460e-003, 2.630394e-002, 1.138976e-002, 1.192830e-002, 1.794890e-002, -2.274730e-002, -2.089944e-002, -6.005673e-003, -1.876785e-002, -9.609707e-003, 6.267948e-003, -9.696017e-003, -1.853610e-002, -1.478988e-002, -1.021771e-002, -5.316941e-003, 6.379577e-003, 1.448340e-002, 1.319177e-002, 7.492654e-003, 6.917623e-003, 6.522098e-003, 1.809446e-003, -4.295459e-003, -9.226511e-003, -1.040173e-002, -7.008334e-003, 7.741752e-004, 6.152332e-003, 1.403111e-002, 2.206388e-002, 2.942766e-002, 2.139273e-002, -5.336613e-003, -3.522554e-002, -4.382203e-002, -1.341683e-002, 2.635082e-003, 2.265982e-003, 1.175286e-002, 1.119775e-002, 6.576174e-003, 3.538641e-003, -7.056984e-003, -1.602115e-002, -4.077061e-003, -1.002410e-002, 1.835399e-002, -4.648815e-004, 1.382175e-002, 2.617467e-002, -1.208723e-002, -3.605526e-003, -6.298332e-003, -1.352145e-002, 1.059780e-002, 5.704475e-003, -1.079686e-002, -4.712749e-003, 2.167868e-003, -5.967816e-003, -1.327903e-002, -7.568892e-003, 7.228681e-003, 5.267416e-003, -1.640858e-003, 1.901811e-003, 5.463789e-003, 6.751299e-003, 6.538030e-003, 9.737308e-003, 1.225484e-002, 1.288039e-002, 1.167310e-002, 9.221022e-003, 8.114747e-003, 7.707571e-003, 1.658147e-002, 2.432384e-002, 1.336723e-002, -1.407773e-002, -4.000169e-002, -2.041817e-002, 2.180076e-002, 2.850724e-002, 1.213067e-002, 2.147863e-002, 2.352123e-002, -2.702572e-004, -1.239686e-002, -1.183405e-002, -4.287861e-003, -6.320635e-003, 9.114160e-003, -4.096320e-003, 2.049210e-002, 3.184258e-002, 5.279746e-003, 1.111878e-002, -6.671076e-003, 5.480432e-003, 1.879724e-002, 6.189621e-004, 3.895229e-004, 7.867971e-003, -3.535332e-004, -1.644726e-002, -1.889387e-002, -1.150216e-002, -4.550602e-003, -9.805956e-003, -1.462266e-002, -1.247826e-002, -9.141754e-003, -1.852998e-003, 4.775559e-003, 1.530940e-002, 2.356672e-002, 2.244781e-002, 1.513644e-002, 4.568467e-003, 1.512683e-004, -4.131054e-003, -8.790683e-004, 1.071275e-002, 1.565249e-002, 3.730707e-003, -2.798050e-002, -3.134058e-002, 1.093845e-002, 3.664521e-002, 1.771026e-002, 1.087658e-002, 3.282816e-002, 1.131690e-002, -1.853403e-002, -9.099720e-003, -1.840216e-003, -5.078137e-003, 2.526276e-003, -2.964849e-003, 2.867116e-002, 3.300906e-002, 1.882224e-002, 1.673587e-002, -2.215836e-004, 2.036790e-002, 9.920115e-003, 3.246499e-003, 1.365566e-002, 9.997931e-003, -7.728935e-003, -1.551529e-002, -1.260310e-002, -1.288197e-002, -1.712808e-002, -2.203127e-002, -2.396667e-002, -2.457709e-002, -2.181732e-002, -9.426278e-003, 6.452657e-003, 2.319623e-002, 3.086756e-002, 2.968980e-002, 1.787762e-002, 3.971166e-003, -9.421201e-003, -1.700046e-002, -2.034767e-002, -7.484844e-003, 6.504741e-003, 7.664917e-003, -1.329964e-002, -3.223628e-002, -8.077440e-003, 2.708494e-002, 2.971620e-002, 9.862692e-004, 1.989690e-002, 1.622351e-002, -1.764689e-002, -7.120869e-003, -1.331217e-002, -5.814151e-003, -1.444364e-003, 1.384026e-002, 3.013744e-002, 3.679061e-002, 2.320451e-002, 1.109592e-002, 8.408054e-003, 1.819759e-002, 1.484857e-003, 1.027403e-002, 2.788197e-002, 1.340843e-002, -7.472906e-003, -1.247676e-002, -1.388396e-002, -1.340767e-002, -1.627150e-002, -2.411012e-002, -3.092418e-002, -2.869434e-002, -2.843604e-002, -1.358226e-002, 8.727719e-003, 2.594825e-002, 3.299039e-002, 3.206691e-002, 2.083739e-002, 7.614028e-003, -5.638352e-003, -1.799273e-002, -2.858465e-002, -2.136305e-002, 2.926559e-003, 9.868602e-003, 2.220477e-004, -1.438105e-002, -1.626249e-002, 9.402466e-003, 3.267713e-002, 1.271054e-003, -1.058590e-003, 1.199496e-002, -2.212362e-002, -1.109534e-002, -1.064594e-002, -9.565801e-003, -4.321259e-003, 1.408594e-002, 1.945808e-002, 3.385571e-002, 2.483508e-002, 8.999287e-003, 5.569554e-003, 1.624499e-002, 2.388175e-003, 1.999116e-002, 3.495303e-002, 1.666384e-002, 1.259264e-003, -4.039852e-003, -5.539466e-003, -4.978372e-003, -1.150719e-002, -2.708714e-002, -4.026327e-002, -3.871831e-002, -3.025578e-002, -1.274051e-002, 6.141885e-003, 2.302438e-002, 3.026480e-002, 3.312605e-002, 2.626795e-002, 1.397319e-002, 1.517318e-003, -1.199689e-002, -2.287842e-002, -2.347912e-002, -5.770220e-003, 8.811242e-003, 1.236487e-002, 4.732281e-003, -6.038699e-003, -3.217457e-003,


© ISO/IEC 2004 — All rights reserved

Copyright International Organization for Standardization
Provided by IHS under license with ISO
No reproduction or networking permitted without license from IHS
Not for Resale

1.879084e-002, 1.084309e-003, -1.377296e-002, -2.211000e-003, -3.465048e-002, -1.709396e-002, -9.331951e-003, -1.374196e-002, -4.376728e-003, 1.149876e-002, 3.855000e-003, 4.400230e-004, 2.422069e-002, 7.333227e-003, 5.596459e-003, 1.849912e-002, 1.035352e-002, 2.625340e-002, 3.250098e-002, 1.507025e-002, 1.234046e-002, 1.270325e-002, 9.446186e-003, 5.190950e-003, -4.948483e-003, -2.453464e-002, -4.061032e-002, -3.793487e-002, -2.517986e-002, -9.572895e-003, 6.157210e-003, 1.448119e-002, 2.191051e-002, 2.347068e-002, 2.221996e-002, 1.497922e-002, 4.635143e-003, -6.863030e-003, -1.568935e-002, -2.003562e-002, -8.698466e-003, 1.027584e-002, 1.882020e-002, 2.109280e-002, 1.108307e-002, -3.932589e-003, 5.683651e-003, 5.671024e-004, -2.422622e-002, -2.014906e-002, -4.611966e-002, -1.857017e-002, 9.646030e-004, -7.681310e-003, -6.885345e-003, 1.990801e-004, -9.572390e-003, -9.481184e-003, 1.959466e-002, 5.737411e-003, 7.620693e-003, 1.890415e-002, 7.246638e-003, 1.722964e-002, 2.058172e-002, 1.397983e-002, 2.880007e-002, 2.647131e-002, 2.008433e-002, 1.257311e-002, -1.573059e-003, -2.097889e-002, -3.125779e-002, -2.938779e-002, -1.393808e-002, -1.779959e-003, 7.219839e-003, 1.297364e-002, 1.374152e-002, 1.384413e-002, 1.492322e-002, 6.907453e-003, -4.885516e-003, -1.598074e-002, -1.998766e-002, -1.970396e-002, -7.507589e-003, 1.517060e-002, 3.252244e-002, 2.834773e-002, 1.697357e-002, -3.314149e-003, -3.972297e-003, -3.907949e-003, -2.287059e-002, -2.205578e-002, -4.289290e-002, -1.247258e-002, 8.543777e-003, -7.483836e-003, -8.236066e-003, -1.510497e-002, -2.077116e-002, -1.721320e-002, 1.452177e-002, 2.367212e-003, 1.073322e-003, 1.639294e-002, 1.587569e-003, 4.517820e-003, 1.043770e-002, 2.225496e-002, 4.104324e-002, 4.233899e-002, 3.076601e-002, 1.723851e-002, -2.960045e-003, -1.511959e-002, -2.219044e-002, -1.925346e-002, -6.272655e-003, 2.720857e-003, 6.336028e-003, 1.267714e-002, 1.043932e-002, 7.883136e-003, 5.657791e-003, -1.639988e-003, -1.338286e-002, -2.499841e-002, -2.855677e-002, -2.392764e-002, -9.908973e-003, 1.731230e-002, 3.673361e-002, 3.408582e-002, 1.884422e-002, 4.766731e-004, -1.004874e-002, -1.174156e-002, -2.022813e-002, -1.511533e-002, -2.511218e-002, -2.572613e-002, 1.566803e-002, -1.131613e-002, -6.527690e-003, -2.010456e-002, -2.186684e-002, -2.313160e-002, 7.625604e-003, -6.204089e-003, -6.171225e-003, 7.740233e-003, -1.098340e-002, -1.140265e-002, 2.795920e-003, 3.138341e-002, 5.492353e-002, 5.476957e-002, 3.680823e-002, 1.510135e-002, -8.565592e-003, -2.035283e-002, -2.027954e-002, -1.016121e-002, 1.675361e-003, 1.075706e-002, 1.319691e-002, 1.435184e-002, 9.180448e-003, 7.903975e-003, 1.436707e-003, -1.104638e-002, -2.225033e-002, -3.252534e-002, -3.516638e-002, -3.028516e-002, -1.993146e-002, 3.888854e-003, 2.650441e-002, 3.106376e-002, 1.748556e-002, 1.351871e-003, -7.671120e-003, -1.224141e-002, -1.908636e-002, -2.008652e-003, -5.445374e-003, -1.291299e-002, 1.373277e-002, -8.504602e-003, -1.739658e-002, -1.958461e-002, -1.788351e-002, -2.854434e-002, -9.256558e-004, -1.584145e-002, -1.834750e-002, -7.328610e-003, -2.903529e-002, -3.166649e-002, -1.294564e-003, 3.457477e-002, 5.563999e-002, 4.220493e-002, 1.756688e-002, -1.019831e-002, -3.094079e-002, -3.485715e-002, -2.402709e-002, -4.871390e-003, 9.116187e-003, 1.924046e-002, 2.075247e-002, 2.135484e-002, 1.902126e-002, 1.557231e-002, 5.252190e-003, -1.174212e-002, -3.086735e-002, -4.397554e-002, -5.038988e-002, -4.627875e-002, -3.525401e-002, -1.171883e-002, 7.448960e-003, 1.407926e-002, 3.389533e-003, -8.066158e-003, -1.019733e-002, -1.251624e-002, -1.881621e-002, 2.802517e-003, 1.013183e-002, 2.383432e-004, 8.112987e-003, -1.084870e-002, -2.563388e-002, -1.262691e-002, -5.987894e-003, -3.094591e-002, -1.746138e-003, -1.996679e-002, -2.904846e-002, -1.342127e-002, -3.913662e-002, -4.313611e-002, -3.659746e-003, 3.917116e-002, 5.323551e-002, 2.943897e-002, -1.915621e-003, -3.210636e-002, -5.158249e-002, -5.360601e-002, -3.448179e-002, -2.188534e-003, 1.886235e-002, 2.948304e-002, 3.290835e-002, 3.647895e-002, 4.254129e-002, 3.771586e-002, 2.824430e-002, 6.414523e-003, -2.049513e-002, -3.952327e-002, -5.283923e-002, -5.130909e-002, -3.956953e-002, -1.579692e-002, -1.486726e-003, 4.144384e-003, -4.950143e-003, -1.204950e-002, -8.964409e-003, -6.955249e-003, -1.654219e-002, 6.801177e-003, 1.853946e-002, 1.059882e-002, 1.057146e-002, -8.218341e-003, -2.389614e-002, -3.444488e-003, 2.149627e-003, -2.499214e-002, -1.277750e-003, -1.507090e-002, -2.672466e-002, -1.106346e-002, -3.127121e-002, -3.188074e-002, 1.436388e-002, 5.130504e-002, 5.001886e-002, 2.040146e-002, -1.090045e-002, -3.825908e-002, -5.407422e-002, -5.767942e-002, -4.637745e-002, -1.583743e-002, 6.205267e-003, 1.802950e-002, 2.747913e-002, 3.613356e-002, 4.738804e-002, 5.065204e-002, 4.220210e-002, 1.600547e-002, -1.140863e-002, -3.100775e-002, -3.846059e-002, -3.670103e-002, -2.500153e-002, -5.315007e-003, 1.000781e-002, 1.520734e-002, 2.021681e-004, -1.099432e-002, -4.308592e-003, 5.676035e-003, -3.361896e-003, 3.010582e-003, 2.207821e-002, 1.881301e-002, 1.950989e-002, -2.590208e-003, -1.362073e-002, 1.073253e-002, 5.102296e-003, -1.508804e-002, 2.693528e-003, -1.311168e-002, -1.641129e-002, -1.471655e-003, -1.089881e-002, -1.114555e-003, 3.551587e-002, 3.102785e-002, 5.520402e-003, -2.397224e-002, -4.526146e-002, -6.076457e-002, -6.017600e-002, -4.078402e-002, -1.760625e-002, 9.595964e-003, 1.649673e-002, 7.929242e-003, 6.894041e-003, 1.844097e-002, 3.459501e-002, 3.930364e-002, 3.287173e-002, 6.062789e-003, -2.413493e-002, -4.105997e-002, -4.427368e-002, -2.653114e-002, -2.930888e-003, 9.505101e-003, 1.774845e-002, 3.734819e-002, 2.558736e-002, 1.915576e-003, 6.591495e-003, 2.111905e-002, 9.828879e-003, 4.405067e-003, 2.105253e-002, 2.499736e-002, 2.936765e-002, 3.096020e-003, -4.460083e-003, 1.929102e-002, -1.105287e-002, -5.059405e-004, 3.130843e-003, -6.268584e-003, -5.777910e-004, 6.292495e-003,

© ISO/IEC 2004 — All rights reserved


Copyright International Organization for Standardization
Provided by IHS under license with ISO
No reproduction or networking permitted without license from IHS
Not for Resale

9.530256e-003, 1.633363e-002, 1.745083e-002, 5.785566e-003, -1.268401e-004, -5.074048e-003, -1.317784e-002, -3.160668e-002, -3.998152e-002, -2.042767e-002, 1.747276e-002, 4.806986e-002, 4.799207e-002, 1.839140e-002, 1.541379e-004, 5.154220e-003, 1.716398e-002, 2.162852e-002, 1.985848e-002, -1.016172e-002, -3.754303e-002, -4.026091e-002, -2.564055e-002, 1.059938e-002, 5.306047e-002, 6.096003e-002, 4.252621e-002, 4.264487e-002, 4.465718e-002, 2.612470e-002, 2.204554e-002, 3.275337e-002, 1.477985e-002, 5.356453e-003, 2.179673e-002, 2.507976e-002, 2.800303e-002, 6.604005e-003, 3.870484e-003, 1.925933e-002, -5.040553e-003, 9.640040e-003, 3.648275e-003, 3.089392e-003, 9.324489e-003, 1.134261e-002, 2.134356e-002, 1.234301e-002, 1.882808e-003, 1.037290e-002, 3.175176e-002, 4.151084e-002, 2.597533e-002, -5.506311e-003, -3.041749e-002, -2.782800e-002, 5.280215e-003, 4.286606e-002, 5.234619e-002, 2.332399e-002, 3.748008e-003, 8.692363e-003, 2.073751e-002, 1.898942e-002, 1.529589e-002, -2.604405e-002, -5.853619e-002, -6.897492e-002, -5.326813e-002, -3.452167e-003, 5.324333e-002, 8.184533e-002, 6.120376e-002, 1.905856e-002, 2.467357e-002, 3.132975e-002, 2.829320e-002, 2.536343e-002, 1.051540e-002, 8.129807e-003, 2.119225e-002, 1.655587e-002, 2.049276e-002, 1.170885e-002, -6.045354e-003, 1.139642e-002, -9.567380e-003, 1.327531e-002, 5.032758e-003, 1.399995e-002, 1.357012e-002, 6.575869e-003, 1.436064e-002, -3.942704e-003, -7.133334e-003, 2.130392e-002, 4.686163e-002, 3.296985e-002, 1.832806e-002, 1.640758e-003, -2.896403e-002, -3.537036e-002, -2.937418e-003, 3.159019e-002, 3.675225e-002, 1.735506e-002, -2.500342e-003, 1.027191e-002, 2.563873e-002, 2.097385e-002, 1.747996e-002, -2.361461e-002, -6.734708e-002, -1.001795e-001, -7.788736e-002, -2.886509e-002, -2.183188e-003, 5.305701e-002, 6.847771e-002, 1.521496e-002, -1.506216e-002, -1.380002e-003, 7.247871e-003, 1.408842e-002, 8.324729e-003, 8.266868e-004, 1.858071e-003, 7.565638e-003, -8.158500e-003, 1.879899e-002, -1.241332e-002, 3.432967e-003, -1.316028e-002, 1.198746e-002, 8.085750e-003, 1.974909e-002, 1.359553e-002, 3.628024e-004, 1.548699e-003, -2.367480e-002, -1.293580e-002, 3.225235e-002, 2.583500e-002, -1.589763e-002, -1.164311e-003, 1.532969e-002, -1.971361e-004, -2.036033e-002, 1.179062e-002, 2.121160e-002, 2.156331e-002, -3.532556e-003, -1.613349e-002, 4.340822e-004, 9.438230e-003, 2.865668e-002, 2.351610e-002, 7.830149e-003, -2.387508e-002, -3.657426e-002, 2.302905e-002, 4.848299e-002, -2.147145e-002, -8.737325e-003, 5.840526e-002, 3.889431e-002, -1.950527e-002, -2.667498e-002, -8.690480e-003, 4.222620e-003, 1.586014e-002, 1.014652e-004, -7.765907e-003, 1.225647e-002, -2.875352e-003, 2.621030e-002, -8.731212e-003, -3.444058e-003, -1.576936e-002, 1.652336e-002, 4.531044e-003, 1.058663e-002, -1.383835e-005, -1.366984e-003, 6.189590e-003, -2.610781e-002, -3.765634e-002, -2.122118e-002, -4.804270e-002, -9.742753e-002, -7.994649e-002, -3.481525e-003, -2.324087e-003, -3.749273e-002, 6.502206e-003, 1.904521e-002, 1.599099e-002, -1.277274e-002, -4.467107e-002, -3.939919e-002, -1.607008e-002, 3.055681e-002, 3.050261e-002, 1.471311e-002, -1.325203e-002, -3.598813e-002, 4.543966e-002, 3.428639e-002, -7.748958e-002, -9.032256e-002, -1.258848e-002, 2.364442e-002, -9.403278e-003, -1.976760e-002, -8.649790e-003, -4.223596e-003, 2.460547e-002, 9.600866e-003, -8.485436e-003, 1.628500e-002, 9.534676e-004, 2.899327e-002, -2.056029e-003, -3.588004e-003, -1.386464e-002, 4.735889e-003, -3.562405e-003, 9.948257e-004, -1.075764e-002, -1.121370e-003, 1.352207e-002, -2.994294e-003, -4.189101e-002, -5.109754e-002, -6.025645e-002, -5.487341e-002, -3.036194e-002, 6.857083e-003, 1.645914e-002, 1.174243e-002, 1.679616e-002, 8.936771e-003, 1.041194e-003, -1.902807e-002, -4.721575e-002, -4.610960e-002, -3.786437e-002, 1.625026e-002, 3.004668e-002, 1.627442e-002, 2.325871e-002, 2.756593e-002, 3.474323e-002, 9.946444e-003, -3.150959e-002, -6.584898e-002, -6.372711e-002, -3.859727e-002, -2.850108e-002, -1.676898e-002, -1.571382e-002, -2.072235e-002, 1.206527e-002, -1.723263e-003, -1.440814e-002, 6.536526e-003, -1.816415e-002, 1.824583e-002, -2.427713e-003, 1.862212e-003, -1.038781e-002, -2.408902e-003, -8.641169e-003, 1.002153e-003, -9.659414e-003, -6.428087e-003, 6.454698e-003, 9.041196e-003, -1.611974e-002, -3.243985e-002, -4.031015e-002, -3.044582e-002, -6.122166e-003, 1.007552e-002, 1.107546e-002, 9.785735e-003, 4.940598e-003, -8.830450e-003, -1.251893e-002, -2.311767e-002, -3.502793e-002, -3.378333e-002, -3.797291e-002, -9.222573e-003, 1.875136e-002, 1.983276e-002, 2.993146e-002, 3.613957e-002, 3.499265e-002, 1.752502e-002, -6.178263e-003, -3.197867e-002, -4.374520e-002, -3.834762e-002, -2.424973e-002, -1.305472e-002, -1.596894e-002, -3.027636e-002, -2.400369e-003, -2.456722e-003, -9.184719e-003, -2.235976e-003, -2.894492e-002, 1.131209e-002, -7.533694e-003, -1.622928e-003, -9.125438e-003, 1.484384e-003, -9.689350e-003, -6.573532e-003, -1.071908e-002, -1.178278e-002, 7.610398e-003, 1.956304e-002, 1.033538e-003, -1.737621e-002, -3.104984e-002, -2.514124e-002, -8.654592e-003, 4.055786e-003, 4.778332e-003, 7.984474e-003, 1.172188e-002, 2.850127e-003, -1.521688e-002, -1.892045e-002, -2.148050e-002, -1.571106e-002, -2.498742e-002, -3.441293e-002, 7.018854e-003, 1.485912e-002, 2.595733e-002, 2.996481e-002, 2.648671e-002, 1.240695e-002, -2.079707e-003, -2.314995e-002, -3.495687e-002, -3.049864e-002, -1.143672e-002, -8.501855e-003, -1.711420e-002, -3.656363e-002, -9.962431e-003, -2.310304e-003, -1.461651e-002, -1.360684e-002, -3.497947e-002, 1.015214e-002, -6.749840e-003, -1.770511e-003, -5.818968e-003, 6.137521e-003, 2.419974e-004, -5.483937e-003, -3.858490e-003, -1.077841e-002, 4.834489e-003, 1.996549e-002, 9.849561e-003, -1.155299e-002, -2.013480e-002, -1.622497e-002, -3.782758e-003, 7.817160e-003, 1.494814e-002, 2.660132e-002, 3.111942e-002, 5.082085e-003, -7.062848e-003, -9.991874e-004, -6.926638e-004, 1.010243e-002,


© ISO/IEC 2004 — All rights reserved

Copyright International Organization for Standardization
Provided by IHS under license with ISO
No reproduction or networking permitted without license from IHS
Not for Resale

3.986542e-003, -2.873742e-002, -3.219850e-003, 2.222003e-002, 2.952738e-002, 3.008524e-002, 2.398070e-002, 1.297173e-002, 1.514035e-003, -1.731983e-002, -3.102507e-002, -2.438018e-002, -1.333247e-002, -6.456452e-003, -1.295492e-002, -2.874862e-002, -3.838293e-003, 8.474717e-003, -1.813552e-002, -1.585410e-002, -2.835072e-002, -1.330758e-003, -1.418859e-003, -1.122728e-002, -1.049047e-003, 3.163292e-003, 5.789238e-003, -2.415581e-003, -7.780765e-003, -8.252162e-003, -4.573469e-004, 1.044007e-002, 2.015169e-004, -9.116367e-003, -1.702612e-002, -6.430005e-003, 7.353935e-003, 2.165087e-002, 3.385228e-002, 4.296275e-002, 2.968393e-002, 4.983294e-003, 8.067885e-003, 1.734301e-002, 2.429269e-002, 3.341512e-002, 3.194440e-002, -3.474376e-003, -1.989361e-002, 1.198076e-002, 2.895553e-002, 3.275531e-002, 2.584615e-002, 1.786589e-002, 5.664838e-003, -9.113316e-003, -2.255744e-002, -1.958310e-002, -1.268300e-002, -7.260161e-003, -3.355505e-003, -1.050801e-002, 2.042753e-003, 3.615701e-003, -1.862843e-002, -4.574750e-003, -1.021606e-002, -1.778209e-003, -1.216757e-002, -6.770544e-003, 4.636268e-003, -1.242187e-003, 3.943119e-003, -2.120957e-003, -8.925318e-003, -1.016786e-002, -4.734350e-003, -4.927902e-003, -9.432234e-003, -1.207473e-002, -1.190277e-002, -7.854915e-005, 1.681408e-002, 2.702866e-002, 3.166217e-002, 2.737580e-002, 1.054258e-002, -1.365715e-003, 2.392895e-002, 2.841481e-002, 3.706626e-002, 4.368901e-002, 4.497123e-002, 2.040853e-002, -1.416578e-002, -1.975051e-002, 1.016121e-002, 3.373210e-002, 3.408957e-002, 2.551958e-002, 1.138559e-002, -5.897191e-003, -2.030578e-002, -2.072104e-002, -1.565775e-002, -6.627485e-003, 1.759640e-003, 2.878238e-003, -1.927172e-003, 3.734015e-004, -1.912036e-002, 3.387321e-003, 1.094335e-002, -3.362803e-003, -1.217695e-002, -7.235334e-003, 4.820511e-003, -5.462693e-003, -2.079496e-003, -7.731004e-003, -1.298118e-002, -4.995722e-003, -3.263973e-003, -1.311774e-002, -1.668844e-002, -1.499329e-002, -1.313737e-002, -1.228628e-003, 1.297482e-002, 2.177761e-002, 2.146155e-002, 6.536289e-003, -2.158992e-002, -7.041829e-003, 1.449537e-002, 9.667908e-003, 1.114502e-002, 1.410898e-002, 1.409653e-002, 9.887027e-003, -1.896253e-004, -2.106260e-002, -2.004307e-002, -7.409192e-004, 5.309500e-003, 3.069322e-003, -5.777376e-003, -1.728131e-002, -1.894726e-002, -1.694661e-002, -1.409862e-002, -7.222816e-003, 4.521562e-003, 1.005632e-002, -1.107521e-002, -7.812474e-003, -1.153552e-002, 1.743912e-002, 1.708592e-002, -7.211287e-003, -9.835572e-003, -5.161067e-003, -2.842549e-003, -1.422044e-002, -1.280436e-002, -1.546141e-002, -1.800940e-002, 4.383989e-003, 8.181567e-003, -6.656379e-003, -1.247923e-002, -1.022505e-002, -1.078569e-002, -3.313738e-003, 7.537634e-003, 1.733751e-002, 7.126987e-003, -2.012103e-002, -4.053429e-002, -1.399404e-002, 7.907112e-003, -1.880705e-003, -1.076769e-002, -4.888967e-003, 4.734811e-003, 4.968441e-003, 9.095650e-003, -9.438636e-003, -2.365801e-002, -2.532514e-002, -1.821900e-002, -1.465381e-002, -1.675092e-002, -1.886532e-002, -1.452072e-002, -1.046970e-002, -6.719392e-003, -4.730063e-005, 1.447478e-002, 1.055782e-002, -1.591074e-002, -7.389760e-003, 1.582341e-003, 2.011071e-002, 1.810502e-002, -9.985762e-003, 1.857849e-004, 7.764207e-003, 6.153488e-004, -2.072678e-002, -2.171729e-002, -1.464795e-002, -5.561184e-003, 1.369391e-002, 1.502575e-002, 3.893687e-003, -6.957122e-005, 6.988784e-003, 9.776160e-003, 1.559408e-002, 2.157640e-002, 2.157016e-002, -3.856973e-003, -3.290569e-002, -2.619343e-002, 9.288243e-003, 3.305878e-002, 1.942771e-002, -7.102623e-003, 5.157800e-003, 3.622025e-002, 4.573635e-002, 3.570470e-002, 4.034207e-003, -1.789290e-002, -2.510072e-002, -7.444346e-003, 7.310975e-004, -1.235407e-003, -2.218748e-003, -6.159064e-004, 5.134936e-004, 4.908334e-003, 1.485775e-002, 2.941233e-002, 1.571029e-002, -1.562105e-002, -1.145403e-004, 7.616681e-003, 1.315808e-002, 8.070605e-003, -6.528132e-003, 1.862705e-003, 1.096278e-002, 6.926890e-003, -2.026010e-002, -2.244212e-002, -2.208888e-003, 1.692982e-002, 3.584430e-002, 2.485494e-002, 1.174428e-002, 9.180827e-003, 1.765067e-002, 2.174463e-002, 2.933006e-002, 2.613720e-002, 7.185633e-003, -2.657095e-002, -3.895994e-002, -1.815106e-002, 6.985996e-003, 9.060835e-003, -1.200592e-002, -3.185594e-002, -2.526435e-002, 4.126191e-003, 3.578679e-002, 3.545260e-002, 6.401724e-003, -2.055363e-002, -3.119266e-002, -1.809134e-002, 1.230375e-003, 1.214692e-002, 1.246909e-002, 1.372140e-002, 1.059434e-002, 1.479436e-002, 2.688562e-002, 4.137109e-002, 2.486571e-002, -1.102306e-002, 7.560091e-004, 1.122991e-002, -2.672712e-004, -1.849157e-004, 6.744974e-003, 1.224901e-002, 2.157113e-002, 1.350493e-002, -9.361682e-003, -1.616557e-002, 5.900911e-003, 2.529878e-002, 4.106923e-002, 2.706314e-002, 9.844050e-003, 8.188138e-003, 1.815082e-002, 2.273187e-002, 2.988865e-002, 1.288928e-002, -2.021462e-002, -4.560693e-002, -4.027442e-002, -1.924069e-002, -7.731894e-003, -6.588347e-003, -1.656536e-002, -3.031159e-002, -3.797233e-002, -2.127451e-002, 4.726377e-003, 1.487044e-002, 4.731359e-003, -2.264908e-002, -3.529933e-002, -3.157446e-002, -1.239214e-002, 1.034415e-002, 1.963730e-002, 1.818392e-002, 1.070696e-002, 1.607060e-002, 2.736115e-002, 3.650963e-002, 2.636851e-002, -4.303977e-003, 3.991858e-003, 7.321962e-003, -9.362023e-003, -2.367053e-003, 1.705736e-002, 1.861159e-002, 3.337201e-002, 2.606931e-002, 1.161438e-002, 4.202313e-003, 1.436081e-002, 1.092404e-002, 1.922307e-002, 1.364025e-002, 6.532187e-003, 5.711582e-003, 1.301222e-002, 1.961342e-002, 2.123477e-002, -5.095188e-003, -3.573639e-002, -4.975481e-002, -3.401995e-002, -9.970575e-003, 4.230827e-003, 1.864655e-002, 1.742664e-002, 6.220808e-003, 7.227231e-004, 1.726390e-002, 3.980518e-002, 3.516683e-002, 1.550814e-002, -1.565618e-002, -3.598540e-002, -4.174993e-002, -2.307758e-002, -2.201810e-003, 1.485249e-002, 1.821625e-002, 4.598104e-003, 8.996620e-003, 1.834657e-002, 2.737540e-002, 1.964582e-002,

© ISO/IEC 2004 — All rights reserved


--`,,```,,,,````-`-`,,`,,`,`,,`---

Copyright International Organization for Standardization
Provided by IHS under license with ISO
No reproduction or networking permitted without license from IHS
Not for Resale

9.830835e-003, 1.544871e-002, -6.880426e-004, -1.449154e-002, 1.338738e-003, 2.330438e-002, 2.205167e-002, 1.706782e-002, 3.451448e-002, 1.936291e-002, 1.111104e-002, 2.645698e-002, 9.218724e-003, -9.815464e-004, -1.997992e-003, -2.722379e-003, 2.359409e-004, 4.271490e-003, 1.085699e-002, 9.166543e-003, -1.516276e-002, -3.884810e-002, -5.242385e-002, -4.057709e-002, -1.662624e-002, 6.329307e-003, 2.691555e-002, 3.256250e-002, 2.883867e-002, 2.675734e-002, 4.073034e-002, 5.754745e-002, 5.772121e-002, 2.965017e-002, -6.572710e-003, -2.952751e-002, -3.694063e-002, -2.327202e-002, -6.271604e-003, 2.108231e-003, 5.755998e-003, -5.883123e-003, -6.210279e-003, -2.961919e-004, 5.655748e-003, 3.218129e-003, 4.675379e-003, 1.148794e-002, -3.884264e-003, -1.568157e-002, 6.499373e-003, 1.778216e-002, 1.558770e-002, 1.524597e-002, 3.419901e-002, 1.676810e-002, 1.282347e-002, 1.916253e-002, 6.034265e-003, -1.037094e-002, -1.395919e-002, -1.360744e-002, -5.527382e-004, -5.323285e-003, 2.545906e-004, -2.689534e-003, -1.790066e-002, -3.759039e-002, -5.453731e-002, -4.755089e-002, -2.521831e-002, 1.221135e-003, 1.902725e-002, 1.699510e-002, 1.128023e-002, 1.444826e-002, 1.918955e-002, 2.896038e-002, 3.098391e-002, 1.942904e-002, 2.873994e-003, -1.483620e-002, -2.184938e-002, -1.874865e-002, -7.544656e-003, -8.727620e-003, -9.084967e-003, -1.549900e-002, -2.011970e-002, -2.498139e-002, -1.926769e-002, -7.403753e-003, -4.402496e-003, -3.933283e-005, -6.875791e-003, -7.742195e-003, 1.876169e-002, 1.248120e-002, 5.049115e-003, 8.368075e-003, 2.493354e-002, 5.770966e-003, 1.094000e-002, 1.200057e-002, 6.668813e-003, -1.144211e-002, -1.620575e-002, -1.778113e-002, -8.736822e-004, -8.182905e-003, -8.562914e-003, -5.754715e-003, -1.044562e-002, -3.157925e-002, -4.042379e-002, -1.169911e-002, 2.098842e-002, 3.550952e-002, 2.906422e-002, 7.953519e-003, -1.014046e-002, -1.052808e-002, -1.842220e-002, -7.146618e-003, 8.343447e-004, -3.223508e-003, -3.342600e-003, -1.049318e-003, -8.694852e-003, -1.250778e-002, -6.261016e-003, -9.656449e-003, -1.779819e-002, -2.516512e-002, -3.575122e-002, -3.636369e-002, -3.211249e-002, -2.248003e-002, -1.237218e-002, -6.173527e-003, -1.056047e-002, 5.723041e-003, 9.775856e-003, 9.502656e-003, 5.769426e-003, 4.134638e-003, 2.224031e-002, 3.756448e-003, 6.971955e-003, 1.228920e-002, 1.001174e-002, -2.337872e-003, -5.608677e-003, -1.317727e-003, 4.094413e-003, -6.825826e-003, -1.212067e-002, -4.868839e-003, -4.293877e-003, -1.774370e-002, -3.964849e-004, 4.519167e-002, 5.330788e-002, 3.763180e-002, 5.177404e-003, -2.839295e-002, -4.943288e-002, -4.915024e-002, -4.677956e-002, -2.172320e-002, -5.846524e-003, 4.674087e-003, 9.552459e-003, 1.175324e-002, 4.911557e-003, -3.649761e-003, -5.832579e-003, -9.529363e-003, -1.993884e-002, -3.027923e-002, -3.598702e-002, -3.155678e-002, -3.234356e-002, -2.075934e-002, -1.295131e-002, -9.059155e-003, 6.203681e-004, 2.006449e-002, 5.847161e-003, -2.252787e-003, 3.382508e-003, -6.465594e-003, 1.206733e-002, -1.363162e-003, 2.307069e-003, 1.055758e-002, 2.299710e-003, 8.076705e-003, 1.572552e-002, 2.177277e-002, 1.192180e-002, -2.295316e-003, -1.263791e-002, -8.115659e-003, -1.469719e-003, -8.829541e-003, 5.537868e-003, 3.683958e-002, 4.242161e-002, 2.658851e-002, 4.555421e-003, -1.655216e-002, -2.710697e-002, -2.542603e-002, -2.165514e-002, -3.285836e-003, 1.002017e-002, 1.801289e-002, 2.177334e-002, 2.108862e-002, 1.332316e-002, 4.631300e-003, 4.253527e-004, -4.830720e-003, -1.344912e-002, -2.601505e-002, -1.416264e-002, -2.955911e-003, -9.677324e-003, 7.682701e-003, 4.429711e-003, 2.697524e-003, 1.139770e-002, 2.089724e-002, 1.465154e-004, -1.023452e-002, -9.724951e-004, -1.712992e-002, 4.646423e-003, -7.511875e-003, -1.190147e-002, -1.642232e-003, -1.175828e-002, -1.072276e-003, 2.666108e-002, 2.795315e-002, 1.446986e-002, -1.051390e-003, -1.250951e-002, -7.252573e-003, -6.193306e-004, 1.752593e-003, 1.288811e-002, 2.519075e-002, 3.357442e-002, 3.330116e-002, 2.247042e-002, 5.662400e-003, -4.510122e-003, -1.176417e-002, -1.194292e-002, -3.565245e-003, 5.106212e-003, 1.013533e-002, 1.187294e-002, 9.565085e-003, 3.937425e-003, -9.229515e-004, -7.355145e-004, -1.527531e-003, -8.148257e-003, -1.393159e-002, 4.749045e-003, 2.472795e-002, 1.311778e-002, 1.833002e-002, 4.731935e-003, -5.445877e-004, 2.224373e-003, 3.477562e-003, -1.342398e-002, -1.255363e-002, -5.179629e-004, -1.714403e-002, 1.776211e-003, -9.340619e-003, -1.690846e-002, -1.661384e-002, -1.900821e-002, -1.050454e-002, 1.689475e-002, 2.350377e-002, 9.536852e-003, -7.063697e-003, -8.337629e-003, -5.534815e-003, -3.253363e-005, 5.743444e-003, 8.574289e-003, 1.232510e-002, 2.482093e-002, 2.675322e-002, 1.603341e-002, 1.017952e-003, -1.307738e-002, -1.834364e-002, -9.950067e-003, 2.864710e-003, 1.474140e-002, 1.568716e-002, 7.109418e-003, -1.580080e-003, -9.090899e-003, -1.027686e-002, 1.105500e-003, 6.431416e-003, 1.927502e-003, 7.769402e-003, 1.687664e-002, 2.495561e-002, 1.126186e-002, 8.680774e-003, -1.223246e-002, -1.071285e-002, -5.316021e-003, -9.835529e-003, -2.122995e-002, -1.255486e-002, 2.717937e-003, -1.528284e-002, -1.106669e-003, -1.357746e-002, -1.511681e-002, -4.439799e-003, -1.393996e-002, -1.732078e-002, -1.265345e-002, -2.083684e-003, -1.873930e-002, -1.882989e-002, -1.481708e-003, 7.810236e-004, 6.891786e-003, 5.400463e-003, 2.735478e-003, 5.884458e-003, 1.211776e-002, 1.546506e-002, 7.475204e-003, -5.252004e-003, -1.218606e-002, -1.086514e-002, 1.944529e-003, 1.538199e-002, 2.632559e-002, 2.746674e-002, 1.750142e-002, 3.617683e-003, -1.092533e-002, -6.697390e-003, 4.133292e-003, 6.962800e-003, 1.445083e-002, 1.564375e-002, 1.143623e-002, -2.831021e-003, -3.260840e-003, 1.994307e-003, -1.799344e-002, -1.035842e-002, -7.632940e-003, -1.316594e-002, -1.510115e-002, -5.319249e-003, 3.030679e-003, -1.323975e-002, -1.543440e-002, -4.400484e-003, -1.269303e-003, 9.872146e-003, -6.724710e-003, -3.428031e-002, -4.484254e-002, -2.305143e-002, -


--`,,```,,,,````-`-`,,`,,`,`,,`---

© ISO/IEC 2004 — All rights reserved

Copyright International Organization for Standardization
Provided by IHS under license with ISO
No reproduction or networking permitted without license from IHS

Not for Resale

2.728337e-002, -3.234490e-002, -4.120213e-005, 4.492405e-003, 7.994773e-003, 2.377239e-003, -3.429177e-003, -5.685310e-003, -6.617001e-003, -6.568614e-003, -1.185725e-002, -1.548353e-002, -1.532436e-002, -8.425112e-003, 8.486401e-003, 2.468907e-002, 2.978553e-002, 3.024635e-002, 2.319878e-002, 7.210292e-003, -5.120572e-003, 4.044873e-003, 1.049440e-002, 7.061311e-003, 1.232410e-002, 1.833743e-002, -7.737932e-003, -2.632459e-002, -5.735274e-003, 5.954131e-003, -1.489122e-002, -7.641046e-003, -4.478518e-003, -7.677953e-003, -3.019167e-003, 4.369247e-003, 4.151215e-003, -8.717883e-003, -2.757155e-003, 2.455476e-003, 1.161510e-003, 8.612685e-003, -4.542693e-003, -3.215311e-002, -4.338031e-002, -2.132495e-002, -1.662648e-002, -2.402689e-002, -5.595966e-003, 6.755305e-003, 8.752033e-003, 6.608778e-003, -2.104044e-003, -9.639758e-003, -1.387974e-002, -1.719135e-002, -1.905838e-002, -1.852333e-002, -1.478848e-002, -9.559616e-003, 4.728994e-003, 1.547585e-002, 1.903391e-002, 2.334701e-002, 2.184190e-002, 8.156068e-003, 3.251000e-003, 1.152377e-002, 7.943676e-003, -1.722205e-003, 7.110228e-003, 1.815932e-002, -3.026703e-002, -2.957565e-002, -6.219561e-003, -1.152412e-003, -4.453301e-003, 4.496833e-003, 8.620378e-003, 1.343463e-004, 1.551283e-003, 1.053973e-002, 5.877514e-003, -4.055322e-003, 2.438704e-003, 3.124012e-003, -8.030439e-003, 4.349396e-003, 1.997541e-003, -5.024704e-003, -8.034069e-003, -1.550053e-003, 3.466697e-003, -1.502372e-003, -9.397617e-004, 2.680061e-003, 3.858283e-003, 5.258287e-003, 8.855859e-004, -1.463353e-003, -3.313651e-003, -5.501522e-003, -4.534970e-003, -2.855854e-003, -2.211503e-003, -2.136649e-003, 2.040346e-003, 5.977899e-003, 9.618842e-003, 1.606392e-002, 1.579908e-002, 9.963039e-003, 1.408668e-002, 1.320054e-002, -5.078975e-003, -1.222311e-002, 5.659024e-003, 1.278569e-002, -3.065740e-002, -1.893275e-002, -5.468080e-004, -7.312809e-003, -2.285014e-003, 1.480572e-002, 2.136749e-002, 4.439254e-003, -4.555264e-003, 1.327957e-002, -3.761564e-003, -8.890568e-003, -5.217213e-003, 4.687083e-003, -6.087993e-003, 7.017528e-003, 1.490706e-002, 2.574370e-002, 6.650864e-003, -1.604472e-004, 4.277894e-003, 1.493718e-003, 1.223764e-002, 5.675225e-003, -4.117117e-004, -4.375441e-003, -5.161734e-003, 3.953469e-003, 7.011971e-003, 8.615757e-003, 6.147312e-003, 5.568250e-003, 5.651497e-003, 5.803647e-003, 8.622248e-004, -3.161144e-003, -4.389901e-003, -8.293680e-004, 4.768434e-003, 8.809515e-003, 2.095543e-002, 1.902082e-003, -2.089811e-002, -1.582106e-002, 1.011391e-002, 8.926037e-003, -2.274758e-002, 3.358826e-004, 7.058924e-003, -4.907329e-003, -1.558379e-003, 2.215967e-002, 2.372961e-002, 1.254723e-002, -3.745592e-003, 1.616426e-002, -3.180972e-003, -1.537260e-002, -6.378431e-003, 9.498121e-003, -3.850561e-003, 9.261011e-004, 1.134595e-002, 1.716525e-002, 3.668860e-003, 1.231975e-003, 1.463245e-003, 5.304296e-003, 1.151174e-002, 5.489027e-003, 3.945020e-003, -4.341842e-003, -1.239463e-002, -7.973839e-003, 6.513399e-003, 2.060598e-002, 2.207907e-002, 1.511419e-002, 1.293211e-002, 9.350196e-003, 2.530528e-003, -5.251976e-003, -1.157527e-002, -8.264495e-003, -7.028458e-003, -1.828766e-003, 3.661823e-003, -1.646341e-002, -2.190535e-002, -5.132635e-003, 2.165508e-002, 1.252640e-002, -1.715429e-002, 2.305578e-003, 7.153508e-003, 2.223928e-003, -1.335739e-003, 2.347869e-002, 1.821852e-002, 6.158197e-004, -7.948879e-003, 4.184571e-003, -1.423920e-002, -2.217476e-002, -7.521235e-003, 8.816014e-003, -1.854739e-002, -2.536198e-002, -7.451614e-003, -2.767873e-003, -2.641925e-003, -6.390745e-003, 4.688416e-004, -6.907811e-004, -4.510261e-003, -1.260778e-002, -5.152308e-003, -5.168460e-003, -1.301165e-002, -1.697610e-002, -1.156606e-002, 1.029315e-002, 1.638235e-002, 1.328093e-002, 6.454591e-003, -2.973273e-003, -1.205606e-002, -2.121368e-002, -2.848318e-002, -3.002729e-002, -1.135360e-002, -2.067905e-003, 1.210950e-003, -2.407706e-003, -6.250885e-003, 1.710089e-002, 3.158636e-002, 1.952363e-002, -6.077754e-003, -1.131312e-003, 6.560308e-003, 2.453241e-004, -2.870892e-003, 1.090358e-002, -7.027814e-003, -8.078452e-003, -1.614862e-002, -1.297941e-002, -7.420846e-003, -1.213420e-002, -3.776655e-003, -4.682796e-003, -2.757873e-002, -3.520152e-002, -1.335555e-002, -1.753442e-002, -1.305949e-002, -1.611893e-003, 1.125881e-002, 4.997765e-003, -1.725372e-003, -1.686698e-002, -1.662697e-002, -7.335643e-003, -3.909379e-003, -1.625700e-003, -1.841925e-004, 6.190950e-003, 1.188727e-002, 1.208317e-002, 7.534812e-003, 4.727553e-003, 1.472688e-003, -9.634515e-003, -2.112322e-002, -2.564683e-002, -2.268118e-002, -9.935630e-003, 2.881115e-003, 6.927121e-003, 6.670229e-003, 1.982183e-002, 2.751682e-002, 1.701491e-002, 3.659102e-003, 5.106649e-003, 9.382784e-004, -1.617068e-003, 5.340189e-003, 1.438991e-002, -3.956602e-003, -8.177217e-003, -5.591642e-003, -5.758228e-003, 1.816299e-002, 1.217539e-002, 2.350044e-002, 2.569952e-002, 3.178926e-003, -1.258675e-002, -1.091691e-002, -1.393757e-002, -9.434058e-003, 1.535477e-002, 2.068833e-002, 1.911116e-002, 5.335088e-003, -9.945999e-003, -1.378006e-002, -1.379825e-002, -4.560525e-003, 3.754216e-003, 6.083485e-003, 4.871141e-003, 9.559949e-003, 1.038595e-002, 6.728934e-003, 3.129395e-003, -4.671370e-003, -9.684468e-003, -1.514569e-002, -1.579878e-002, -1.146120e-002, -1.432432e-003, -2.800854e-004, 1.808372e-003, 1.088177e-002, 1.128258e-002, 1.621022e-002, 1.272545e-002, 5.864894e-003, 1.338033e-002, 3.306808e-003, -8.603853e-003, -6.229757e-003, 3.456330e-003, -2.169229e-004, 3.324510e-003, 1.000579e-002, 1.233826e-002, 6.878486e-003, 3.711326e-003, 2.293290e-002, 3.365865e-002, 1.005496e-002, -1.047544e-002, -1.281096e-002, 1.208203e-003, 1.133670e-002, 2.722080e-002, 2.353985e-002, 6.610347e-003, 1.125879e-002, 3.687858e-003, 4.211284e-003, -3.167531e-003, -7.875072e-003, -3.609246e-003, 5.183837e-003, 4.968589e-003, 1.239021e-002, 1.035584e-002, 7.004094e-003, 1.823347e-003, -4.394725e-003, -4.780987e-003, -

© ISO/IEC 2004 — All rights reserved


Copyright International Organization for Standardization
Provided by IHS under license with ISO
No reproduction or networking permitted without license from IHS
Not for Resale

5.638673e-003, -3.690708e-003, -1.372794e-003, -1.278110e-003, -9.237429e-003, -1.047960e-002, -1.667448e-003, -1.464821e-003, -8.627777e-003, -1.332533e-002, -7.172771e-003, 9.394467e-003, 2.289479e-003, -1.203276e-002, -7.115446e-003, 4.452090e-003, -5.118470e-003, -5.399103e-003, 4.641689e-003, 1.549728e-002, 4.770620e-003, -1.587792e-003, 5.137481e-003, 2.074736e-002, 1.124044e-002, 1.487019e-003, 1.485606e-002, 2.595772e-002, 2.217429e-002, 1.643576e-002, 3.957391e-003, -1.268442e-002, 8.774181e-003, 2.288337e-002, 2.651575e-002, 1.934487e-002, 4.406406e-003, 1.911655e-004, -1.253417e-003, -2.531755e-003, -1.186197e-004, 4.112367e-003, 7.934527e-003, 7.812855e-003, 1.018981e-002, 1.351574e-002, 1.278749e-002, 8.559215e-003, 2.609291e-003, -1.889688e-003, -4.998411e-003, -5.043307e-003, -6.069087e-003, -1.320651e-002, -2.182180e-002, -4.066809e-002, -3.324857e-002, -1.376710e-002, -1.395987e-002, -2.023772e-002, -1.139100e-002, 1.230979e-002, 1.636621e-003, -1.473540e-002, -1.475261e-002, -7.576285e-003, 1.187906e-002, -1.074545e-003, 8.996571e-004, 1.105876e-002, 5.339791e-003, -2.208780e-003, 6.516385e-003, -5.690610e-003, -2.252939e-002, -3.302663e-002, -4.903179e-002, -5.758055e-002, -3.777239e-002, -4.331058e-003, 1.341639e-002, 1.505772e-002, 1.552188e-003, -2.536634e-003, -2.897058e-003, -6.830236e-003, -7.686020e-003, -3.763003e-003, -3.758492e-004, 5.124258e-003, 5.064255e-003, 4.624925e-003, -1.161729e-004, 1.016439e-003, 2.991100e-003, 4.855675e-003, 1.082896e-002, 1.530070e-002, 1.269865e-002, 1.639274e-002, 1.003802e-002, 3.104673e-003, 3.207860e-003, 1.586800e-002, 1.776807e-002, 5.431043e-003, 1.623136e-003, 2.056127e-002, 2.100517e-002, -1.628717e-004, -1.666218e-002, -2.595948e-002},
{4.875499e-003, -4.022236e-003, -1.592140e-002, -1.750913e-002, -1.105927e-002, -1.314977e-002, -1.475758e-002, -1.394245e-002, -7.957555e-003, -8.053455e-003, -2.347866e-002, -3.100293e-002, -2.724461e-002, -9.177658e-003, 1.622876e-002, 3.554485e-002, 4.215052e-002, 3.773636e-002, 3.926085e-002, 3.689265e-002, 3.072564e-002, 2.247269e-002, 1.478766e-002, 7.581213e-003, -9.666802e-004, -9.795392e-003, -1.217654e-002, -1.371765e-002, -9.830244e-003, -1.222537e-002, -1.409523e-002, -1.483927e-002, -1.114479e-002, 6.122599e-003, 2.965100e-002, 3.411629e-002, 2.485756e-002, 1.089997e-002, 1.161015e-002, 1.452694e-003, -1.375806e-002, -2.715723e-002, -2.952869e-002, -2.478315e-002, -1.881779e-002, -1.596487e-002, 2.319845e-002, 3.192701e-003, -1.153382e-002, -6.242981e-003, 3.041301e-004, -8.644335e-003, -8.449350e-003, -5.494223e-003, 9.805010e-003, 1.338457e-002, -2.291848e-003, -2.520159e-003, 8.860000e-003, 1.709558e-002, 2.342427e-002, 2.679776e-002, 1.654140e-002, 1.435981e-002, 1.172613e-002, 1.002996e-002, 6.637799e-003, 4.814439e-003, 4.252360e-004, -7.640994e-003, -1.115814e-002, -1.554002e-002, -2.062215e-002, -2.495836e-002, -1.930390e-002, -2.019390e-002, -2.405377e-002, -2.282263e-002, -2.217908e-002, -1.463238e-002, 6.879213e-003, 1.779801e-002, 1.263857e-002, 9.629482e-003, 9.087679e-003, 9.294771e-003, 5.508952e-003, -1.299811e-004, -3.571102e-003, 3.439576e-003, -4.764800e-003, -6.151219e-004, 2.557128e-002, 5.262954e-003, -2.376092e-003, 2.175864e-003, -3.055669e-003, -1.050073e-002, -1.094641e-002, 3.472809e-003, 1.021198e-002, 8.977168e-004, -4.591731e-003, 6.753150e-003, 7.887859e-003, -1.231854e-003, -4.964006e-003, -4.184199e-003, -2.138791e-003, 9.532389e-003, 1.922213e-002, 2.858000e-002, 3.272223e-002, 3.026334e-002, 2.761339e-002, 2.077572e-002, 1.504197e-002, 1.028701e-002, 7.513845e-003, -4.960366e-006, -5.108312e-003, -1.125314e-002, -1.439687e-002, -1.598895e-002, -1.788884e-002, -1.325362e-002, -3.732491e-003, 1.735863e-002, 1.726438e-002, -1.373174e-003, -1.261376e-002, -7.166557e-003, 6.763656e-003, 2.303475e-003, 5.891251e-005, 7.087661e-003, 2.617903e-003, 1.154922e-002, 2.836668e-002, 1.221217e-002, 4.459293e-003, 3.567804e-003, -6.067226e-003, -1.007621e-002, 1.319959e-003, 1.425067e-002, 5.822611e-004, -9.116089e-003, -7.790291e-003, -6.815249e-003, -1.547834e-002, -2.654937e-002, -2.500399e-002, -1.152907e-002, 1.177725e-002, 2.914569e-002, 3.880944e-002, 3.919311e-002, 3.494135e-002, 2.707488e-002, 1.978579e-002, 1.375114e-002, 1.322100e-002, 9.870183e-003, 4.117737e-003, 3.872921e-003, 6.324053e-003, -2.047910e-004, -1.221172e-002, -1.378605e-002, -1.105842e-002, -8.485893e-003, -5.562768e-003, 9.937978e-003, 1.942970e-002, 8.396291e-003, -1.642420e-002, -2.061342e-002, -6.553896e-003, -2.400551e-003, -4.129063e-003, 3.373886e-003, -1.650607e-003, 1.894622e-002, 2.595130e-002, 1.040930e-002, 3.143081e-003, -2.601072e-003, -5.732443e-003, -3.086344e-003, 9.520180e-003, 3.257447e-003, -1.725381e-002, -1.826809e-002, -1.329729e-002, -1.520968e-002, -2.939389e-002, -3.155921e-002, -1.424481e-002, 9.498995e-003, 2.889833e-002, 3.351723e-002, 2.504217e-002, 1.275174e-002, 5.484054e-003, -3.605981e-003, -1.009621e-002, -8.921399e-003, -8.543120e-003, -9.048648e-003, -1.493508e-002, -1.654469e-002, -1.170480e-002, -5.532213e-003, -9.741311e-003, -1.579139e-002, -1.016179e-002, 3.387580e-003, 9.867566e-003, 1.279119e-002, 2.693424e-002, 2.437885e-002, 4.828525e-004, -1.510186e-002, -1.566968e-003, 5.355427e-003, -9.913937e-003, -6.427088e-003, -9.288791e-003, 1.778642e-002, 2.706829e-002, 1.571427e-002, 4.752617e-003, 2.214523e-003, 3.134699e-003, 8.631192e-003, 1.359686e-002, 1.426902e-004, -1.131728e-002, -5.543891e-003, 6.284585e-003, -1.271125e-003, -1.306518e-002, -6.815646e-004, 1.636898e-002, 3.084610e-002, 3.258357e-002, 3.024136e-002, 2.038903e-002, 1.145384e-002, 5.486070e-003, 2.275299e-004, -1.137787e-003, 5.587772e-003, 1.371810e-002, 1.451334e-002, 6.307535e-003, -2.062873e-003, -6.204174e-003, -2.049123e-003, 2.896067e-003, 1.966929e-003, -5.695812e-003, -5.285511e-003, 5.003835e-003, 1.257420e-002, 2.226137e-002, 2.406576e-002, 7.157348e-003, -1.142032e-002, -1.503341e-002, 2.380042e-003, -


© ISO/IEC 2004 — All rights reserved

Copyright International Organization for Standardization
Provided by IHS under license with ISO
No reproduction or networking permitted without license from IHS
Not for Resale

1.945893e-002, -1.978283e-002, -1.825659e-002, 9.502794e-003, 2.599351e-002, 1.844602e-002, 8.032197e-003, -3.374889e-003, 1.821112e-003, 1.094477e-002, 4.047306e-003, -6.837321e-003, -3.770352e-003, 1.432032e-002, 2.067761e-002, -6.362903e-003, -6.249199e-003, 4.507268e-003, 1.164376e-002, 1.298299e-002, 1.279165e-002, 8.531154e-003, 2.091774e-003, -3.276388e-003, -9.175937e-003, -6.028411e-003, -2.606793e-004, 1.564578e-002, 2.576173e-002, 2.597645e-002, 1.677762e-002, 4.242267e-003, -5.347350e-003, -4.577080e-003, -4.097523e-003, 9.816949e-004, 2.203467e-004, -6.792097e-003, -7.057676e-003, 1.231662e-003, 1.324341e-002, 1.696057e-002, 6.114493e-003, -1.114706e-002, -2.335263e-002, -9.574516e-003, -4.596002e-003, -2.673504e-002, -2.058290e-002, 8.521878e-003, 2.480924e-002, 2.189596e-002, 1.160750e-002, -2.074093e-003, 6.609259e-003, 4.207453e-003, -6.256095e-003, -8.873559e-003, 1.173439e-002, 2.420928e-002, 7.073541e-003, -1.279634e-002, -1.039467e-002, 5.957960e-004, 6.351295e-004, -5.271837e-003, -2.734931e-003, -1.529348e-003, -2.125421e-003, -1.027308e-002, -1.876101e-002, -2.047990e-002, -1.260506e-002, 5.024430e-003, 2.121198e-002, 2.419119e-002, 1.277607e-002, 9.680195e-004, -2.054377e-003, -5.438125e-003, -5.721260e-003, -6.849526e-003, -7.040500e-003, -1.029598e-003, -5.234335e-003, -8.284183e-003, 5.094846e-003, 8.611163e-003, 1.573570e-003, -1.218283e-002, -2.006615e-002, -2.231893e-002, -5.996073e-003, -2.611812e-002, -2.606439e-002, 7.534606e-003, 1.544081e-002, 1.469804e-002, 1.505753e-002, 8.949323e-003, 2.468514e-003, -1.830631e-003, -8.560035e-003, -8.216665e-003, 1.166752e-002, 1.551866e-002, -1.071241e-002, -2.400810e-002, -2.258878e-002, -1.036648e-002, -1.584128e-002, -1.707062e-002, -1.389631e-003, 8.143776e-003, 6.775348e-003, -1.064114e-002, -2.549090e-002, -3.945679e-002, -3.677141e-002, -1.947976e-002, -2.841158e-003, 1.834803e-003, -5.328401e-003, -1.350029e-002, -1.251619e-002, -1.182056e-002, -9.707104e-003, -1.211164e-002, -1.234166e-002, -4.717109e-003, -5.541104e-004, -5.964911e-003, -1.155532e-003, 1.805982e-003, -2.623979e-003, -7.775668e-003, -1.059022e-002, -1.771040e-002, -1.397818e-002, -3.151837e-002, -2.692959e-002, 7.690108e-003, 3.104950e-003, 9.055047e-003, 2.286366e-002, 1.091571e-002, -9.698713e-003, 1.624504e-003, -4.265746e-003, -1.775103e-002, -3.298464e-003, -1.156232e-003, -2.171225e-002, -3.399254e-002, -2.090145e-002, -1.046802e-002, -1.736056e-002, -8.777009e-003, 7.741829e-003, 2.169436e-002, 1.348780e-002, -1.023472e-002, -3.515985e-002, -5.234588e-002, -5.345086e-002, -3.865059e-002, -2.603001e-002, -1.394205e-002, -1.417981e-002, -1.844352e-002, -1.908751e-002, -1.059888e-002, -3.668229e-003, -3.057225e-003, -7.574403e-003, -6.100652e-003, -2.719859e-003, -4.166104e-003, -6.488578e-003, 8.823328e-004, -9.136308e-003, -9.582869e-003, -2.563990e-003, -9.065990e-003, -9.537177e-003, -3.313467e-002, -2.083693e-002, 4.689740e-004, -5.322380e-003, -9.500678e-004, 2.687821e-002, 2.344160e-003, -1.431340e-002, 1.277650e-002, -1.265426e-002, -3.020455e-002, -8.802765e-003, -7.532203e-003, -2.941009e-002, -2.707624e-002, -1.017080e-002, -8.519185e-003, -9.015655e-003, -4.300000e-003, 1.457281e-002, 2.530376e-002, 1.773676e-002, -9.957819e-003, -3.680935e-002, -5.249570e-002, -5.530878e-002, -4.036111e-002, -2.336835e-002, -8.540046e-003, -1.272164e-003, -3.222724e-003, -4.498190e-003, 1.622759e-003, 8.345333e-003, 1.219237e-002, 1.604691e-002, 1.162817e-002, 2.644921e-003, 1.222665e-003, -2.413880e-003, 1.554821e-003, -8.851805e-003, -1.880153e-002, -1.184233e-002, -7.719271e-004, 4.898143e-004, -2.588822e-002, -2.221804e-002, -1.192199e-002, -9.757028e-003, -3.198926e-003, 2.118734e-002, -5.014707e-003, -6.670165e-003, 1.782819e-002, -2.601891e-002, -3.241287e-002, -3.750824e-003, -8.775632e-003, -2.306171e-002, -9.518990e-003, 1.060128e-003, -8.817520e-003, -1.688805e-002, -1.011730e-002, 1.100128e-002, 2.715623e-002, 2.233029e-002, -3.635572e-003, -2.668999e-002, -4.092584e-002, -4.662275e-002, -3.013839e-002, -7.045325e-003, 1.156866e-002, 1.678221e-002, 1.890322e-002, 1.691229e-002, 2.007647e-002, 2.348278e-002, 2.446678e-002, 3.553259e-002, 3.404694e-002, 2.056347e-002, 6.848977e-003, 4.040285e-003, 7.313309e-003, -3.105924e-004, -2.011938e-002, -1.660782e-002, -1.972740e-003, 4.697259e-003, -1.486641e-002, -2.300086e-002, -1.524857e-002, -1.420575e-002, -3.603672e-003, 1.953032e-002, 3.965723e-003, 5.963753e-003, 1.814152e-002, -2.881709e-002, -2.489361e-002, 3.859682e-003, -6.274223e-003, -3.384420e-003, 9.397913e-003, 6.772989e-003, -2.040502e-002, -3.071213e-002, -1.820124e-002, 5.727543e-003, 2.770372e-002, 2.657325e-002, 8.791720e-003, -1.152739e-002, -2.543408e-002, -3.423284e-002, -1.550587e-002, 1.254861e-002, 2.885405e-002, 3.541362e-002, 3.960506e-002, 3.684224e-002, 2.955486e-002, 2.747913e-002, 2.407894e-002, 3.113285e-002, 4.110564e-002, 3.467000e-002, 1.693179e-002, 7.556978e-003, 8.006671e-003, 4.476482e-003, -1.375687e-002, -2.304232e-002, -1.310628e-002, 2.905016e-003, -3.165002e-003, -9.868557e-003, -1.159066e-002, -1.628853e-002, -4.383562e-003, 1.877822e-002, 3.902838e-003, 1.053808e-002, 1.397107e-002, -1.929638e-002, -1.475310e-002, 1.095924e-002, 4.561298e-003, 1.811934e-002, 2.190274e-002, -1.150222e-003, -3.232274e-002, -3.835811e-002, -2.579158e-002, 1.098443e-003, 2.727569e-002, 3.401985e-002, 2.279235e-002, 8.008993e-004, -1.145048e-002, -1.756393e-002, -2.444253e-003, 2.161209e-002, 3.863880e-002, 4.445672e-002, 4.872352e-002, 4.275470e-002, 2.717800e-002, 1.422145e-002, 4.703126e-003, 3.414564e-003, 2.121033e-002, 2.629837e-002, 2.186327e-002, 1.505467e-002, 5.899532e-003, 6.014651e-004, -5.922565e-003, -1.865241e-002, -2.441340e-002, -3.799664e-004, 8.593327e-003, 6.670336e-003, -3.019451e-003, -1.558529e-002, -2.359740e-003, 1.419018e-002, 6.391278e-003, 1.300853e-002, 1.106465e-002, -1.566567e-002, -1.876433e-003, 1.714113e-002, 1.527233e-002, 3.417388e-002, 2.392285e-002, -

© ISO/IEC 2004 — All rights reserved


Copyright International Organization for Standardization
Provided by IHS under license with ISO
No reproduction or networking permitted without license from IHS
Not for Resale

1.544531e-002, -4.592222e-002, -4.620265e-002, -2.918915e-002, 4.931743e-003, 3.380543e-002, 4.318505e-002, 3.420342e-002, 1.390141e-002, -3.307527e-003, -8.952995e-003, 7.460588e-004, 1.623407e-002, 3.487738e-002, 4.020215e-002, 3.997725e-002, 3.638007e-002, 1.604474e-002, -3.641177e-003, -1.861863e-002, -2.678983e-002, -1.611572e-002, 2.654811e-003, 1.766431e-002, 1.632853e-002, 3.156976e-003, -3.528582e-003, -3.859398e-003, -8.440709e-003, -1.885245e-002, -1.657315e-003, 2.872376e-002, 2.502144e-002, 1.004342e-002, -1.118039e-002, -4.958514e-005, 8.774024e-003, 8.171364e-003, 9.708757e-003, 1.204149e-002, -7.619485e-003, 9.694677e-003, 2.168798e-002, 2.084313e-002, 3.629777e-002, 1.636881e-002, -2.739424e-002, -5.327106e-002, -4.829179e-002, -2.306242e-002, 1.361761e-002, 4.371538e-002, 5.401354e-002, 4.433429e-002, 2.057079e-002, -2.796096e-003, -1.277253e-002, -1.400397e-002, 2.681556e-004, 1.874293e-002, 2.584778e-002, 1.993854e-002, 1.897317e-002, 5.565175e-003, -8.863351e-003, -3.084165e-002, -4.874398e-002, -4.775535e-002, -2.361185e-002, -6.350996e-004, 9.068415e-003, 9.514236e-004, -9.162758e-003, -6.900982e-003, 2.513281e-003, -3.358069e-003, 3.853939e-004, 3.379859e-002, 4.305116e-002, 2.579919e-002, -2.848830e-004, -4.966661e-003, -1.778543e-003, 1.295445e-003, 1.516152e-003, 1.056612e-002, 2.099993e-003, 2.039097e-002, 1.722641e-002, 1.361333e-002, 3.434516e-002, 1.426350e-002, -2.762235e-002, -4.902434e-002, -3.542452e-002, -2.976493e-003, 2.955882e-002, 5.006044e-002, 5.616325e-002, 4.501344e-002, 2.277742e-002, -6.927896e-003, -2.197019e-002, -2.808171e-002, -2.019486e-002, -4.174946e-003, 1.061572e-002, 1.304339e-002, 1.569087e-002, 1.022236e-002, 1.090856e-003, -2.023170e-002, -4.775455e-002, -6.267857e-002, -4.496093e-002, -2.185353e-002, -5.444684e-003, -4.413902e-003, -8.021723e-003, -7.547814e-003, 9.443834e-003, 1.366574e-002, 8.258772e-003, 2.969143e-002, 5.421047e-002, 3.900441e-002, 9.663974e-003, -1.866150e-002, -1.504440e-002, -8.097972e-003, -1.229871e-002, 3.828521e-003, 5.936240e-003, 2.168993e-002, 1.067709e-002, 1.376946e-002, 4.065400e-002, 2.193854e-002, -1.610194e-002, -3.413945e-002, -2.223709e-002, 7.471286e-003, 3.723122e-002, 6.122824e-002, 6.584904e-002, 4.948257e-002, 2.410216e-002, -1.119298e-002, -3.641534e-002, -4.896543e-002, -4.148721e-002, -2.177913e-002, 9.148125e-003, 3.610376e-002, 4.375055e-002, 3.955110e-002, 2.163235e-002, -2.816975e-003, -3.254424e-002, -6.133073e-002, -5.641888e-002, -3.187777e-002, -1.882334e-002, -6.785284e-003, -4.183199e-003, -1.164723e-002, 9.246980e-003, 2.262578e-002, 1.034967e-002, 2.424568e-002, 5.164058e-002, 4.891374e-002, 1.867747e-002, -2.518992e-002, -1.889509e-002, -1.724236e-002, -2.234137e-002, -8.628583e-003, -6.629813e-004, 9.998818e-003, 4.219769e-003, 1.344893e-002, 4.812002e-002, 4.090309e-002, 9.703140e-003, -9.342777e-003, -2.127553e-002, -1.701061e-002, 1.666378e-003, 2.557256e-002, 5.001039e-002, 4.907457e-002, 2.341731e-002, -2.115730e-002, -5.342230e-002, -7.067881e-002, -5.853091e-002, -2.952289e-002, 1.360174e-002, 4.888255e-002, 4.764142e-002, 1.985410e-002, -1.277363e-002, -4.165432e-002, -5.906267e-002, -6.924181e-002, -6.470147e-002, -4.360191e-002, -2.653433e-002, -1.043489e-002, 5.815943e-003, -1.204232e-002, 7.470990e-003, 3.283687e-002, 1.209757e-002, 1.189964e-002, 3.754639e-002, 5.017465e-002, 2.546677e-002, -2.583599e-002, -2.007795e-002, -2.333244e-002, -2.731837e-002, -1.384783e-002, -8.516734e-003, 2.238538e-003, 8.955099e-003, 1.270291e-002, 4.897388e-002, 5.205155e-002, 3.539423e-002, 3.507629e-002, 2.269531e-002, -1.677246e-003, -2.169692e-002, -1.568029e-002, 1.233721e-002, 3.497343e-002, 3.195043e-002, -1.481068e-002, -4.822297e-002, -6.798420e-002, -5.413446e-002, -7.793113e-003, 2.863925e-002, 2.908420e-002, 8.247073e-004, -2.441603e-002, -4.252554e-002, -3.504165e-002, -2.123030e-002, -1.481265e-002, -2.206954e-002, -2.654368e-002, -2.435325e-002, -8.667560e-003, 1.070213e-002, -8.592296e-003, -2.459251e-003, 3.488762e-002, 1.493746e-002, 2.663215e-003, 2.303655e-002, 3.955655e-002, 2.397762e-002, -2.459989e-002, -8.848539e-003, -2.536502e-002, -2.418335e-002, -9.916068e-003, -1.186435e-002, -5.029708e-003, 1.063308e-002, 1.585583e-003, 1.036451e-002, 2.686450e-002, 3.180948e-002, 3.886314e-002, 2.421310e-002, 5.434831e-003, -1.244501e-002, -1.411579e-002, 4.890592e-003, 3.815787e-002, 5.179439e-002, 1.325465e-002, -2.297650e-002, -4.095541e-002, -2.475530e-002, 1.935208e-002, 2.678645e-002, -7.063052e-003, -4.294015e-002, -6.355546e-002, -6.177451e-002, -3.842778e-002, -5.815543e-003, 1.294264e-002, 1.632527e-002, 2.115706e-003, -1.389100e-002, -2.986932e-003, 1.670974e-002, -3.961845e-004, -1.018194e-002, 1.654920e-002, 8.026217e-003, -5.962680e-003, 5.792668e-003, 2.944071e-002, -2.471633e-004, -2.092158e-002, -3.109742e-003, -1.265888e-002, -1.381123e-002, -3.363131e-003, -1.166085e-002, -1.170273e-002, 1.691095e-003, -3.412930e-002, -2.659589e-002, -4.831813e-003, 5.238301e-003, 1.273523e-002, 1.250695e-003, -1.774304e-002, -3.234580e-002, -3.812891e-002, -2.721083e-002, 1.800768e-002, 5.697612e-002, 3.224035e-002, -8.238047e-003, -2.922300e-002, -6.741464e-003, 2.988000e-002, 8.581513e-003, -4.377632e-002, -7.951362e-002, -9.283589e-002, -8.119172e-002, -5.796688e-002, -3.501972e-002, -1.775637e-002, -8.426221e-003, -1.258052e-002, -1.607818e-002, 1.079918e-003, 2.231060e-002, 7.311464e-003, -1.155084e-002, 4.287108e-004, -6.643234e-003, -2.064208e-002, -5.811362e-003, 1.924582e-002, -8.479517e-003, -1.118592e-002, 7.533154e-003, 3.954386e-003, 3.748210e-003, -1.888942e-003, -7.645565e-003, -1.622306e-002, -6.355938e-003, -4.035262e-002, -4.807129e-002, 6.576122e-003, 3.743019e-002, 4.844036e-002, 4.584826e-002, 3.780982e-002, 3.261309e-002, 2.223878e-002, 5.239947e-003, 1.133254e-002, 4.392089e-002, 5.072585e-002, 1.419939e-002, -1.987993e-003, 1.944284e-002, 4.062022e-002, 6.357339e-003, -2.648361e-002, -


© ISO/IEC 2004 — All rights reserved

Copyright International Organization for Standardization
Provided by IHS under license with ISO
No reproduction or networking permitted without license from IHS
Not for Resale

2.319252e-002, -4.838614e-003, 2.476736e-002, 3.922746e-002, 3.518150e-002, 1.865433e-002, 5.222016e-003, -1.810764e-002, -1.850429e-002, 1.430598e-002, 2.545349e-002, 1.056729e-002, -9.178589e-003, -2.534065e-003, -1.412024e-002, -1.944689e-002, -1.771294e-003, 1.446002e-002, -1.252156e-002, -4.062125e-003, 2.120876e-002, 1.122140e-002, 1.172314e-002, -3.167657e-003, 4.487258e-003, -2.529371e-003, 2.052210e-002, -2.134489e-002, -3.163658e-002, 2.182937e-002, 4.927853e-002, 4.010177e-002, 3.933052e-002, 1.158169e-002, 2.787921e-002, 2.879818e-002, 2.697147e-002, 1.653733e-002, 3.214264e-002, 4.695869e-002, 2.011707e-002, 4.351324e-003, 2.438361e-002, 5.015445e-002, 2.256040e-002, 1.810340e-002, 2.178903e-002, 2.859687e-002, 4.504569e-002, 4.922764e-002, 4.337663e-002, 4.172020e-002, 2.009263e-002, -1.473265e-002, -2.440056e-002, -1.531087e-002, -8.454214e-003, -5.290005e-003, -1.381024e-002, -8.590994e-003, -2.607410e-002, -2.957060e-002, -1.707964e-002, 2.128183e-004, -1.234756e-002, 6.630913e-003, 1.882658e-002, 5.497724e-003, 5.025913e-003, -5.843547e-003, 1.261077e-002, 4.990183e-003, 3.190889e-002, 8.399277e-003, 9.509859e-003, 1.873768e-002, 1.035437e-002, 8.284365e-003, 5.315821e-002, 5.190359e-002, 3.547215e-002, 2.438341e-002, 1.732455e-002, 2.719020e-003, 1.678203e-002, 3.292824e-002, 1.768947e-002, 1.009511e-002, 1.180769e-002, 3.555014e-002, 3.289434e-002, 1.945839e-002, 2.260148e-003, 4.021431e-002, 5.556137e-002, 5.636677e-002, 4.178000e-002, 3.482650e-004, -1.879036e-002, -2.324482e-002, -2.609377e-002, -2.633016e-002, -2.920863e-002, -1.082584e-002, -1.553948e-005, -6.828537e-003, -3.567170e-002, -3.727850e-002, -2.806226e-002, -8.365190e-003, -1.197980e-002, 1.464392e-002, 6.294163e-003, -1.494836e-002, -1.039979e-002, -5.523451e-003, 1.221864e-002, -5.312445e-003, 1.555634e-002, 1.342512e-003, 1.232955e-002, -6.333516e-003, -1.081041e-002, -1.053847e-002, 3.904657e-003, -6.102568e-003, -2.073282e-002, -2.568263e-002, -3.586333e-002, -3.586650e-002, 1.930811e-003, 1.574208e-002, 3.682782e-003, 1.295125e-002, 1.192509e-002, 2.782117e-003, 1.150095e-002, -3.378157e-003, -1.786212e-002, -2.185469e-002, -1.784761e-002, -9.739550e-003, -1.120388e-002, -1.781438e-002, -2.100988e-002, -1.711944e-002, -4.871423e-003, -1.392317e-002, -2.322487e-002, -4.890356e-003, 1.843369e-002, 1.408197e-003, -2.365335e-002, -2.195918e-002, -2.403162e-002, -1.460566e-002, -1.496672e-002, 1.632332e-002, -1.513961e-004, -1.662479e-002, -1.048426e-002, 4.016027e-003, 1.026722e-002, -1.464891e-002, -1.710164e-004, -6.757515e-003, 6.326439e-003, -1.077034e-002, -8.376939e-003, -1.722936e-003, -6.273388e-003, -1.377202e-002, -2.913750e-002, -3.969003e-002, -4.828340e-002, -3.446341e-002, -2.947566e-003, 1.039549e-003, -4.245778e-004, 2.120412e-002, 2.033256e-002, -1.558372e-002, 1.759979e-003, -5.787436e-003, -1.224794e-002, -1.935685e-002, -2.416254e-002, -1.691454e-002, -1.315203e-002, -1.005112e-002, -8.693209e-003, 5.444278e-003, 1.715381e-002, 2.504684e-003, -1.850056e-002, -3.638055e-004, 2.894389e-002, 1.718422e-002, 5.542882e-003, 4.265312e-003, -1.229339e-002, -2.208313e-002, -1.364673e-002, 1.219030e-002, 3.002765e-003, -4.820482e-003, 3.543370e-003, 1.898173e-002, 1.854312e-002, -1.112874e-002, -5.098641e-003, -2.390919e-004, 6.780927e-003, -6.268228e-003, -7.817316e-003, -3.673990e-003, -7.780700e-003, -1.484081e-002, -2.377088e-002, -2.929247e-002, -2.728356e-002, -6.405942e-003, -8.674524e-004, -2.844120e-003, -6.474714e-003, 1.443877e-002, 2.324337e-002, -2.063093e-002, -1.666422e-002, 7.003644e-003, 3.696326e-003, -4.994110e-003, -9.725059e-003, -5.848434e-003, -3.956548e-003, 2.120872e-003, 1.282948e-002, 3.166668e-002, 3.555856e-002, 1.024317e-002, -7.592497e-003, 7.962093e-003, 3.547933e-002, 1.135897e-002, 1.853018e-002, 2.100566e-002, 2.287186e-005, -2.716942e-002, -1.289540e-002, 1.000839e-002, 5.275982e-003, 3.359316e-003, 1.661186e-002, 2.120011e-002, 2.119917e-002, -1.575580e-002, -1.322202e-002, 2.993659e-003, 6.683586e-003, -5.342167e-004, -1.624983e-003, 2.395279e-003, 1.604494e-003, -1.139394e-003, -1.775655e-003, 2.865635e-003, 7.407517e-003, 3.448703e-003, -7.010695e-003, -2.781414e-005, -1.199390e-002, -1.664774e-004, 1.737233e-002, -9.445210e-003, -3.142343e-002, 2.496037e-003, 2.236965e-002, 1.512412e-002, 9.757540e-003, 1.278345e-002, 1.279589e-002, 1.698815e-002, 2.685796e-002, 4.363239e-002, 4.214729e-002, 9.013381e-003, 1.886317e-003, 1.986618e-002, 4.120947e-002, 7.885289e-003, 2.159018e-002, 2.700254e-002, 6.108929e-003, -4.194877e-002, -1.904686e-002, -8.937053e-004, 2.570801e-003, 1.433104e-003, 1.154443e-002, 3.318503e-003, 1.033577e-002, -2.045578e-002, -1.681064e-002, 1.264634e-003, 8.539471e-003, -3.324966e-003, -1.975471e-003, 6.299282e-003, 5.600875e-003, 1.049028e-002, 1.658853e-002, 1.720361e-002, 3.059782e-003, -1.798008e-002, -6.200801e-003, -4.681751e-004, -1.955308e-002, -1.692669e-002, 8.278174e-003, 5.375998e-003, -2.694038e-002, -1.738484e-002, 1.162197e-002, 2.467841e-002, 2.140901e-002, 2.003710e-002, 1.797618e-002, 1.759112e-002, 2.415250e-002, 3.805687e-002, 4.008129e-002, 1.332922e-002, 1.434091e-003, 3.023567e-002, 3.684091e-002, 1.851770e-003, 1.612572e-002, 3.165230e-002, 9.977819e-003, -2.851614e-002, -1.553280e-002, -1.427005e-002, -1.205988e-003, -4.827708e-004, -3.509955e-003, -1.994188e-002, -4.149260e-003, -2.165132e-002, -1.821995e-002, -9.795368e-005, 1.907435e-003, -1.177248e-002, -1.286215e-002, -4.682032e-003, -1.000487e-003, 5.653744e-003, 5.816134e-003, -5.542370e-003, -2.206462e-002, -2.003874e-002, 5.989034e-003, 1.660728e-003, -1.982424e-002, -2.308219e-002, 3.355457e-003, 1.363865e-002, -5.459897e-003, -1.343785e-002, -6.609580e-003, 2.756550e-004, -2.280529e-003, -7.312935e-003, -8.147975e-003, -3.124670e-003, 1.016248e-002, 2.827478e-002, 3.328381e-002, 1.550999e-002, 4.510848e-004, 2.307582e-002, 2.257585e-002, -5.691874e-003, 1.454368e-002, 2.756335e-002,

© ISO/IEC 2004 — All rights reserved


Copyright International Organization for Standardization
Provided by IHS under license with ISO
No reproduction or networking permitted without license from IHS
Not for Resale

7.019391e-003, -1.136065e-002, -1.053888e-002, -1.120751e-002, -2.154073e-003, -8.710585e-003, -1.222032e-002, -3.554564e-002, -1.864673e-002, -1.942185e-002, -2.071822e-002, 4.837319e-003, 2.153844e-003, -1.433194e-002, -2.117958e-002, -2.033386e-002, -2.103886e-002, -1.742461e-002, -1.449098e-002, -1.555744e-002, -1.669625e-002, 3.742179e-003, 2.400155e-002, 1.485321e-002, -2.011005e-003, -1.311855e-002, 7.420522e-003, 3.247122e-002, 2.447914e-002, 1.065913e-002, 1.014130e-002, 7.021729e-003, -5.930934e-003, -1.597988e-002, -2.052210e-002, -1.332682e-002, -1.830384e-003, 1.645164e-002, 2.535927e-002, 3.964748e-003, -1.282474e-002, 5.189408e-003, -5.053085e-003, -2.130400e-002, 3.211884e-003, 1.246061e-002, -2.384001e-003, 4.169321e-003, -3.508744e-003, -7.784215e-004, 7.873698e-004, -1.709929e-002, -1.665838e-002, -4.558872e-002, -2.772935e-002, -2.249614e-002, -2.577252e-002, 2.530298e-003, 3.355650e-003, -1.623879e-002, -2.318720e-002, -2.071987e-002, -1.865372e-002, -1.405366e-002, -9.268607e-003, -1.562874e-002, -8.303691e-003, 1.278251e-002, 2.619065e-002, 1.294166e-002, -5.688999e-003, -2.326963e-002, -1.467938e-002, 1.999072e-002, 3.367337e-002, 2.510391e-002, 2.211152e-002, 2.516856e-002, 1.248212e-002, -2.963667e-003, -1.199898e-002, -1.168052e-002, 2.423469e-003, 1.445624e-002, 1.412933e-002, -9.120660e-003, -3.146466e-002, -1.657404e-002, -2.953464e-002, -4.195179e-002, -1.179704e-002, -1.671412e-003, -7.501662e-003, -1.004518e-002, 6.649612e-003, 1.440190e-002, 6.920202e-003, -1.817140e-002, -1.055032e-002, -3.179708e-002, -1.490616e-002, -1.292655e-002, -2.744935e-002, -2.073127e-003, 1.013376e-002, -8.030497e-003, -1.690195e-002, -1.289396e-002, -6.381487e-003, -3.819654e-003, -1.230796e-002, -2.455895e-002, -1.042913e-002, 1.406677e-003, 1.692611e-003, -2.481978e-002, -2.991585e-002, -3.328048e-002, -2.788311e-002, -6.129295e-003, 2.988359e-004, 3.681277e-003, 6.276545e-003, 1.555527e-002, 1.442780e-002, 2.910982e-003, -1.584048e-003, -2.982817e-003, 4.184555e-003, 1.032434e-002, 8.981806e-003, -2.066770e-002, -3.612902e-002, -2.811841e-002, -3.923102e-002, -4.059759e-002, -1.671243e-002, -1.081162e-002, -1.701151e-002, -1.442392e-002, 1.228719e-002, 2.567081e-002, 1.953677e-002, -2.945700e-003, 1.033257e-002, 1.732756e-003, 1.992461e-002, 1.307426e-002, -2.360269e-002, -5.633307e-003, 1.676248e-002, 1.759714e-003, -5.311078e-003, -4.336760e-003, -1.618474e-003, -8.304549e-003, -2.767164e-002, -2.897578e-002, -9.044890e-003, 2.118345e-003, 1.555877e-003, 1.710450e-004, -6.048805e-003, -1.023906e-002, 2.339968e-004, 8.691244e-003, 1.105915e-003, -1.264166e-002, -8.364004e-003, -8.851719e-003, -4.705000e-003, -2.524692e-003, -5.283945e-003, -3.029366e-003, 2.036811e-003, 4.618687e-003, 2.710844e-003, -2.498292e-002, -3.913221e-002, -2.653407e-002, -2.605265e-002, -1.801557e-002, -1.632343e-002, -2.579077e-002, -2.431907e-002, -9.727701e-003, 2.230661e-002, 2.977004e-002, 2.742098e-002, 3.471062e-003, 1.304695e-002, 2.188477e-002, 4.319141e-002, 3.938094e-002, -1.119822e-002, -2.355654e-003, 2.108813e-002, 1.036416e-002, 6.438049e-005, -3.945377e-003, -1.150526e-002, -2.640018e-002, -3.916077e-002, -2.280230e-002, -8.968932e-003, 4.298270e-003, 4.907355e-003, 2.905376e-003, 5.530695e-003, 8.896794e-003, 1.678506e-002, 4.109384e-003, -1.797881e-002, -2.114716e-002, -1.077958e-002, -1.915738e-002, -2.084209e-002, -1.171349e-002, -1.024954e-002, -5.392740e-003, -1.673732e-003, 3.790864e-003, 5.017757e-004, -2.060857e-002, -2.178114e-002, -5.784714e-003, -7.047929e-003, 3.018830e-003, -1.130982e-002, -3.801101e-002, -3.140150e-002, -5.964727e-003, 2.765385e-002, 2.920348e-002, 2.275640e-002, -8.997491e-004, 2.739649e-003, 1.526190e-002, 4.224418e-002, 5.738512e-002, 9.150253e-003, 2.183970e-003, 2.853715e-002, 1.916117e-002, 2.240309e-003, -9.743138e-003, -2.629215e-002, -3.518896e-002, -2.819233e-002, -1.379915e-002, -5.665528e-003, 1.262975e-003, 7.906113e-004, -2.405637e-003, -8.541007e-003, -1.484255e-002, -1.302379e-002, -2.496768e-002, -3.127527e-002, -2.084230e-002, -9.374697e-003, -1.331784e-002, -2.312783e-002, -2.354415e-002, -1.412587e-002, -3.740474e-003, -4.521269e-004, 4.131972e-003, 2.954110e-003, -1.159123e-002, 8.208788e-004, 1.981258e-002, 9.929664e-003, 8.034426e-003, -8.670209e-003, -3.274376e-002, -1.472387e-002, 4.663047e-003, 2.076858e-002, 3.741470e-002, 1.218326e-002, -3.300597e-003, -4.552946e-003, 6.651345e-003, 2.840905e-002, 4.904846e-002, 1.713766e-002, 3.916081e-003, 2.890646e-002, 2.292603e-002, -2.634129e-003, -2.025572e-002, -3.416104e-002, -2.655345e-002, -8.278466e-003, -5.914077e-003, -6.787786e-003, -2.178492e-003, 6.978773e-003, 8.850687e-003, -1.722430e-003, -1.749979e-002, -2.104967e-002, -3.125921e-002, -2.621407e-002, -1.221739e-002, -3.613486e-004, 1.436662e-003, -6.528951e-003, -1.990202e-002, -1.720233e-002, -4.536967e-003, -3.673546e-004, 5.165915e-003, 8.392010e-003, -2.604645e-003, 1.465609e-002, 3.528211e-002, 1.422112e-002, -2.643176e-003, -6.411958e-003, -5.029820e-003, 9.888405e-003, 1.584912e-002, 1.021976e-002, 2.743752e-002, 9.592944e-003, -6.177425e-003, -7.700415e-003, -9.584334e-003, 4.814954e-003, 2.548651e-002, 4.511826e-003, 1.198790e-003, 2.128091e-002, 2.295874e-002, -4.594342e-003, -2.489454e-002, -2.407325e-002, -3.060418e-003, 1.076100e-002, 1.274720e-002, 1.382986e-002, 1.875935e-002, 1.906651e-002, 7.450938e-003, -2.863240e-003, -1.603391e-002, -2.073279e-002, -2.224487e-002, -1.745611e-002, -7.390443e-003, 7.362875e-003, 1.795281e-002, 1.248525e-002, -9.590452e-003, -2.006893e-002, -1.009016e-002, 2.960065e-004, 1.279823e-002, 1.747710e-002, 8.851202e-003, 2.616079e-002, 4.442240e-002, 1.063196e-002, 4.255273e-004, 1.152671e-002, 2.746318e-002, 2.879630e-002, 2.006783e-002, -4.165474e-003, 1.987351e-002, 9.507656e-003, -1.774347e-003, -1.316989e-002, -2.340567e-002, -1.811061e-002, 8.635723e-003, -2.932483e-003, -5.156994e-003, 1.150796e-002, 1.747249e-002, -3.997425e-003, -2.320125e-002, -


© ISO/IEC 2004 — All rights reserved

Copyright International Organization for Standardization
Provided by IHS under license with ISO
No reproduction or networking permitted without license from IHS
Not for Resale

9.018521e-003, 1.991222e-002, 2.435009e-002, 2.467380e-002, 2.224760e-002, 1.370489e-002, -3.581305e-003, -2.104479e-002, -2.673917e-002, -3.072197e-002, -3.121921e-002, -2.399305e-002, 2.930818e-004, 2.077980e-002, 4.333009e-002, 5.046043e-002, 2.972269e-002, -8.658700e-004, -1.973331e-002, -1.454894e-002, -2.073289e-003, 1.978875e-002, 2.048385e-002, 1.123921e-002, 3.049402e-002, 3.980556e-002, 5.326821e-003, 1.283547e-002, 3.748773e-002, 4.508803e-002, 1.484045e-002, 2.015306e-002, -1.253676e-002, 1.391836e-002, 1.247658e-002, 2.292710e-003, -1.664098e-002, -2.949918e-002, -2.561874e-002, -3.659003e-003, -8.054202e-003, -3.126558e-003, 9.220913e-003, 1.102299e-002, -3.923902e-003, -1.862126e-002, -1.753613e-004, 1.989315e-002, 2.034041e-002, 1.229101e-002, 2.594784e-003, -2.019955e-003, -8.394741e-004, -6.732266e-003, -7.467307e-003, -1.352086e-002, -1.057521e-002, -8.059175e-003, 4.398398e-003, 2.158313e-002, 4.076212e-002, 4.349197e-002, 2.778779e-002, 1.862814e-004, -2.374778e-002, -2.161759e-002, -3.664310e-003, 2.687951e-002, 1.665211e-002, 8.028895e-003, 3.393269e-002, 3.507347e-002, -1.133539e-004, 1.039513e-002, 3.330691e-002, 3.629417e-002, 3.229812e-003, 7.735303e-003, -1.471376e-002, 5.229034e-003, 8.922777e-003, 1.835078e-003, -1.033053e-002, -2.463289e-002, -2.216356e-002, -9.456379e-003, -9.977858e-003, -2.440335e-003, 5.347393e-003, 6.725987e-003, -5.792604e-003, -1.569165e-002, 1.531689e-003, 1.685210e-002, 1.478003e-002, 5.396892e-003, -1.258892e-002, -1.652099e-002, -1.186131e-002, -1.826239e-003, 6.547799e-003, 2.811908e-003, 2.504650e-003, -3.933009e-003, -9.374564e-004, 9.905584e-003, 2.503694e-002, 3.223512e-002, 2.736973e-002, 3.165671e-003, -2.466434e-002, -2.200518e-002, 1.201002e-003, 3.063456e-002, 9.588228e-003, 1.216285e-002, 4.003818e-002, 2.727664e-002, -2.046721e-002, -6.534170e-003, 1.694514e-002, 2.137356e-002, -1.144852e-002, -6.699349e-003, -1.043103e-002, 3.468098e-003, 1.564227e-003, 4.969416e-003, 5.180870e-003, -5.203510e-003, -9.433464e-003, 1.850209e-004, -3.071715e-003, -4.637248e-003, 6.166299e-003, 4.028255e-003, -7.085925e-003, -1.603776e-002, -4.097020e-003, 1.199490e-002, 1.642140e-002, 4.900341e-003, -9.196583e-003, -1.593728e-002, -1.364480e-002, -5.604556e-006, 1.097147e-002, 1.090083e-002, 1.171262e-002, 1.164860e-002, 6.935262e-003, 6.553241e-003, 2.054490e-002, 2.681701e-002, 1.874686e-002, -3.042425e-003, -2.876266e-002, -2.387231e-002, 7.817768e-003, 2.381091e-002, -7.436173e-003, 1.682022e-003, 3.199705e-002, 4.673154e-003, -3.328344e-002, -1.988563e-002, -7.642919e-003, -1.955099e-003, -2.565508e-002, -1.952833e-002, -6.658498e-003, 3.286725e-003, -7.515684e-003, 2.782900e-003, 9.860977e-003, 1.348599e-002, 4.939102e-003, 1.258696e-002, 1.101242e-002, -2.925737e-003, 7.088877e-003, 4.203168e-003, -1.074143e-002, -2.089071e-002, -1.029122e-002, 1.145313e-002, 1.996793e-002, 1.795558e-002, 7.425374e-003, 7.366205e-004, -9.580723e-004, 2.401817e-003, 7.907141e-003, 1.032936e-002, 7.256210e-003, 7.877115e-003, 1.263222e-002, 2.088415e-002, 2.653244e-002, 2.349665e-002, 9.505597e-003, -1.270554e-002, -2.948247e-002, -1.805341e-002, 1.054374e-002, 7.474239e-003, -2.450899e-002, -7.924675e-003, 9.858520e-003, -1.428857e-002, -3.194124e-002, -1.724055e-002, -1.521480e-002, -6.589108e-003, -3.563133e-002, -2.227206e-002, -6.238704e-003, -1.444104e-003, -2.421027e-002, -1.000562e-002, 7.497837e-003, 1.980403e-002, 1.633879e-002, 2.585802e-002, 1.266214e-002, 4.620235e-003, 7.659063e-003, 9.454908e-003, -9.772663e-003, -1.782771e-002, -8.837053e-003, 1.469314e-002, 2.505429e-002, 2.587213e-002, 1.963858e-002, 1.294680e-002, 8.522043e-003, 2.497542e-003, -3.533775e-004, -2.512645e-003, -1.056097e-002, -8.081547e-003, 2.623135e-003, 1.447844e-002, 2.024014e-002, 2.052278e-002, 3.705811e-003, -1.944957e-002, -3.074692e-002, -9.588392e-003, 1.317191e-002, -3.803669e-003, -3.233164e-002, -1.089742e-002, -4.298016e-003, -2.483639e-002, -2.713601e-002, -6.952396e-003, -1.138754e-002, 1.017430e-003, -2.797990e-002, -1.712589e-002, -6.881168e-003, -1.168811e-002, -2.600310e-002, -2.222986e-002, -7.199675e-003, 8.714678e-003, 1.467439e-002, 1.710454e-002, 5.274412e-003, 1.172990e-002, 9.447981e-003, 1.575411e-002, -5.352759e-003, -1.739979e-002, -3.808543e-003, 1.845822e-002, 2.888304e-002, 2.969604e-002, 2.425659e-002, 1.648163e-002, 1.301438e-002, -4.950576e-003, -1.733008e-002, -2.195923e-002, -2.497498e-002, -2.331480e-002, -1.372129e-002, 1.394906e-003, 9.896583e-003, 8.103519e-003, -6.408887e-003, -2.081708e-002, -2.365784e-002, -1.476064e-003, 2.098620e-002, 7.413218e-003, -2.964624e-002, -1.329724e-002, -1.237516e-002, -1.326906e-002, -6.752731e-003, -9.003068e-004, 3.614507e-003, 1.536584e-002, -1.671542e-002, -7.353344e-003, -1.188958e-002, -2.078648e-002, -2.694403e-002, -2.281226e-002, -1.437872e-002, 1.177782e-003, 1.809964e-002, 1.036087e-002, -4.404979e-003, 3.971558e-003, 7.259677e-003, 1.707074e-002, 2.962674e-003, -1.123872e-002, -3.767305e-004, 1.659056e-002, 2.841438e-002, 2.283693e-002, 1.146083e-002, 5.871157e-003, 3.102497e-003, -1.272054e-002, -2.760479e-002, -3.329449e-002, -2.744456e-002, -2.351531e-002, -1.484535e-002, -9.432343e-003, -2.930315e-003, -5.348275e-003, -1.043891e-002, -1.798869e-002, -1.455171e-002, 8.460612e-003, 3.433716e-002, 1.480641e-002, -2.376310e-002, -8.404344e-003, -5.480301e-003, 1.349319e-002, 8.335866e-003, -7.407250e-003, 5.745293e-003, 2.894511e-002, -3.584817e-003, 6.808138e-003, -1.497500e-002, -3.034658e-002, -2.551016e-002, -2.771782e-002, -9.892589e-003, 7.618703e-003, 1.141557e-002, -1.275560e-003, -6.499717e-003, -6.163381e-003, 1.886119e-003, 1.502818e-002, 1.424239e-002, -7.289209e-003, -7.986995e-004, 1.994619e-002, 2.871190e-002, 2.229640e-002, 5.414191e-003, -2.129788e-003, -1.174467e-002, -1.863256e-002, -2.190557e-002, -2.000006e-002, -9.655988e-003, -4.964655e-003, -2.447991e-003, 2.771261e-004, 4.948531e-003, 1.272438e-003, -

© ISO/IEC 2004 — All rights reserved


Copyright International Organization for Standardization
Provided by IHS under license with ISO
No reproduction or networking permitted without license from IHS
Not for Resale

2.386796e-003, -1.329973e-002, -4.374318e-003, 2.081863e-002, 3.542831e-002, 1.330642e-002, -1.895437e-002, -2.167501e-002, -2.271566e-003, 3.154055e-002, 1.677694e-002, -1.602017e-002, -8.672782e-003, 2.920546e-002, 5.345350e-003, 1.676220e-002, -7.929688e-003, -2.036586e-002, -1.894013e-002, -2.469099e-002, 2.828214e-003, 3.646495e-003, -1.274069e-002, -2.185174e-002, -1.301585e-002, -1.461610e-002, -6.292506e-003, 8.287519e-003, 9.148715e-003, -6.617833e-003, -9.492151e-003, 1.017463e-002, 1.661440e-002, 1.352717e-002, 1.691211e-003, -7.697966e-003, -1.770557e-002, -2.279152e-002, -1.764562e-002, -2.947005e-003, 1.112853e-002, 1.634678e-002, 1.885090e-002, 1.896871e-002, 1.554173e-002, 5.052029e-003, -8.637250e-003, -1.518418e-002, 8.148789e-003, 2.693421e-002, 1.823810e-002, 1.273239e-002, -4.914198e-003, -2.541295e-002, -1.507614e-002, 2.555646e-002, 1.087063e-002, -1.475023e-002, -1.720759e-002, 1.159579e-002, -1.018904e-002, 5.867525e-003, 1.505639e-002, 8.915573e-003, 2.225950e-003, -1.040233e-002, 1.177539e-002, -8.003043e-003, -3.154543e-002, -2.351389e-002, -7.658689e-003, -1.195994e-002, -1.443490e-002, -9.442329e-003, -8.173556e-003, -1.631647e-002, -2.471830e-002, -1.941866e-002, -1.043016e-002, -7.115176e-003, -1.054552e-002, -1.670297e-002, -2.219672e-002, -2.158979e-002, -1.279103e-002, 3.450298e-003, 1.856355e-002, 2.527775e-002, 2.871572e-002, 2.695615e-002, 2.482616e-002, 1.031182e-002, -2.187620e-003, 5.133162e-003, 2.348598e-002, 2.193576e-002, 1.946522e-002, 1.904737e-002, 1.698536e-002, -6.245029e-003, -1.945574e-002, 3.083869e-003, 1.703758e-002, -3.844299e-003, -8.770115e-003, -1.976791e-003, -2.811609e-002, -1.001642e-002, 2.946537e-002, 1.665590e-002, 2.138416e-003, -4.840937e-003, 1.090822e-002, -1.090014e-002, -2.544052e-002, -3.737335e-003, 1.255136e-002, 3.432972e-003, -1.249581e-002, -1.484841e-002, -1.707414e-002, -1.179636e-002, -1.603407e-002, -3.284989e-002, -2.874559e-002, -1.603991e-002, -8.249656e-003, -9.884182e-003, -1.168354e-002, -7.194188e-003, -1.689198e-004, 1.318524e-002, 2.790004e-002, 3.193188e-002, 3.041951e-002, 2.748878e-002, -3.045557e-003, -1.245730e-002, -1.352842e-002, 1.043970e-003, 2.134164e-003, -4.878433e-003, 1.754692e-003, 1.327494e-002, 1.797934e-002, 1.038301e-002, -1.620258e-002, -1.428384e-002, 3.477767e-003, 3.197636e-003, 7.126590e-003, 1.604438e-002, -1.482017e-002, 9.207143e-003, 1.484998e-002, -1.139944e-003, -3.119444e-003, 1.975094e-002, 3.428286e-002, 1.341280e-002, 1.020084e-002, 3.938256e-002, 5.435576e-002, 3.168920e-002, 6.962884e-003, 9.856310e-003, 3.669294e-003, 1.643426e-002, 2.128333e-002, -3.026067e-003, -1.488113e-002, -5.982068e-004, 8.828773e-003, 1.002505e-002, 1.213299e-002, 1.433042e-002, 1.628868e-002, 2.067628e-002, 2.178546e-002, 1.860863e-002, 1.165397e-002, 4.642621e-003, 1.629067e-003, -3.248804e-003, 1.006217e-003, 9.140065e-003, 8.420241e-003, 4.359191e-003, -8.056750e-003, -5.046616e-003, 9.004471e-003, 2.259428e-002, 6.092668e-003, -8.457472e-003, -1.478828e-003, -8.341395e-003, -2.138142e-003, -4.987295e-003, 3.316954e-003, 2.781085e-002, -6.241243e-003, -1.504797e-002, -3.054131e-003, 1.904757e-002, 1.738553e-002, -8.451731e-003, -1.127488e-002, 1.474163e-002, 1.996251e-002, -4.546950e-003, -1.308395e-002, 3.837013e-003, -7.257822e-003, -6.988286e-003, 8.010123e-003, 7.724793e-003, -8.154606e-003, -1.162563e-002, 3.887808e-004, 7.329193e-003, 1.494334e-002, 1.695998e-002, 1.801116e-002, 1.693003e-002, 1.337114e-002, 7.325210e-003, 1.287719e-003, -1.732905e-003, 1.554991e-003, 1.929557e-003, -1.126554e-003, -6.907899e-004, 1.233105e-002, 1.335608e-002, -1.752434e-002, -2.996956e-002, -1.441331e-002, -5.485959e-004, 9.949837e-003, 3.360276e-003, -3.766512e-003, -1.394109e-002, -6.282685e-004, -1.245895e-002, 4.716647e-003, 3.389748e-002, 8.849438e-004, -5.617408e-004, -2.795653e-003, -1.162579e-002, -2.249267e-002, -4.401273e-002, -4.109794e-002, -3.215248e-002, -2.583819e-002, -3.102982e-002, -2.920603e-002, -9.590010e-003, -2.127845e-002, -2.954749e-002, -1.729077e-002, 2.002274e-003, -7.218928e-003, -1.764053e-002, -1.210624e-002, -5.885822e-004, 8.002990e-003, 1.069884e-002, 1.345110e-002, 1.152837e-002, 8.174506e-003, 2.057936e-003, -1.317287e-003, -2.622188e-003, -1.698435e-003, -2.199308e-004, -1.497390e-002, -1.251701e-002, 6.713269e-003, 1.805842e-002, -1.036245e-002, -2.775104e-002, -1.637125e-002, -4.756514e-003, 4.039057e-003, 1.074548e-002, -5.960633e-003, -1.741291e-002, -3.811326e-003, -7.519154e-003, 7.503494e-003, 3.737581e-002, 2.152556e-002, 1.063544e-002, -1.633049e-003, -1.685467e-004, 6.667605e-003, 9.731183e-004, -5.608876e-003, -2.379026e-003, -3.245094e-003, -6.241216e-003, -9.653729e-003, 8.069679e-003, -8.380919e-004, -1.610396e-002, -1.817519e-002, 1.293085e-004, 9.440442e-003, 9.573302e-003, 1.339606e-002, 1.760828e-002, 1.936107e-002, 1.568208e-002, 1.704417e-002, 1.760267e-002, 1.742789e-002, 1.292001e-002, 6.681313e-003, 7.271825e-004, -2.288263e-003, -1.302391e-002, -2.839727e-002, -1.693712e-002, 6.937596e-003, 2.102324e-002, 5.100896e-003, -1.211814e-002, -4.029022e-004, 9.229239e-003, 2.297031e-002, 2.219986e-002, -2.341798e-004, -3.301656e-002, -1.903582e-002, -1.329608e-002, 2.617147e-002, 6.343682e-002, -4.468307e-003, -1.242526e-002, -8.204169e-003, 1.051715e-002, 1.613576e-002, 1.110581e-002, -4.830697e-003, -1.348656e-002, -1.550760e-002, -1.479475e-002, -2.558545e-002, -1.362727e-002, -6.987117e-003, -2.963538e-002, -3.659189e-002, -2.291115e-002, -1.016195e-002, 7.601324e-004, 4.779522e-003, 1.132966e-002, 1.620627e-002, 1.616067e-002, 2.056639e-002, 2.431890e-002, 2.040174e-002, 1.464645e-002, 4.216399e-004, -1.417514e-002, -3.258873e-002, -5.010726e-002, -5.575626e-002, -4.834590e-002, -2.784138e-002, 1.441527e-003, -2.396870e-004, -1.525554e-002, -8.072641e-003, -1.017447e-002, 1.119372e-002, 1.592926e-002, 6.500565e-003, -2.111115e-002, -2.478255e-002, 1.005817e-003, 4.614827e-002, 1.106339e-001},


© ISO/IEC 2004 — All rights reserved

Copyright International Organization for Standardization
Provided by IHS under license with ISO
No reproduction or networking permitted without license from IHS
Not for Resale

{-1.853366e-003, -9.936389e-003, -1.271602e-002, 7.033113e-004, -2.067884e-003, -1.068696e-002, -4.763018e-003, -3.858143e-003, -3.873800e-003, -1.999864e-003, 3.082167e-003, 7.128124e-003, 1.214071e-002, 8.482843e-003, -3.123888e-003, -1.480997e-002, -1.642778e-002, -1.303025e-002, -8.743807e-003, 8.137708e-004, 8.386983e-003, 1.388435e-002, 1.450825e-002, 1.549680e-002, 1.452975e-002, 1.207609e-002, 5.910548e-003, -4.927504e-004, -9.555882e-003, -1.471894e-002, -7.875158e-003, -9.081988e-003, -1.311649e-002, -2.841410e-002, -2.892015e-002, -4.610346e-003, 2.790565e-002, 3.583167e-002, 1.635888e-002, 1.036597e-002, 1.032343e-002, 1.133755e-002, 2.374340e-003, -9.647546e-004, -1.648261e-003, -4.452090e-003, -7.038754e-003, -1.026612e-002, -1.345031e-002, -6.375046e-003, -1.714762e-002, -2.387752e-002, -2.011294e-002, -2.546296e-002, -2.904487e-002, -2.151316e-002, -7.366758e-003, -1.031040e-002, -1.941703e-002, -2.719752e-002, -2.681595e-002, -2.274550e-002, -1.576843e-002, -2.178354e-003, 9.310284e-005, 1.082665e-002, 1.960586e-002, 1.912202e-002, 1.873625e-002, 1.651764e-002, 1.799055e-002, 1.540319e-002, 1.352461e-002, 8.985317e-003, 1.493804e-003, -5.925878e-003, -1.212634e-002, -4.712342e-003, 5.878818e-003, 9.816919e-003, 5.627077e-003, -5.417493e-003, 8.869650e-003, 3.372057e-002, 1.267317e-002, -8.958235e-003, -6.754124e-003, -8.226392e-004, -1.335194e-002, -3.408232e-002, -1.624451e-002, -1.606100e-002, 9.169238e-003, 9.336467e-003, 3.742693e-003, -1.368947e-003, -9.383522e-003, -6.048948e-003, 3.591351e-003, 3.634694e-003, 5.781792e-003, 1.784740e-003, -3.384075e-003, -9.405286e-003, -1.183587e-002, -1.440198e-002, -6.522661e-003, -8.057488e-003, -4.679778e-003, -4.830717e-003, -4.224855e-003, -7.427427e-004, 5.225104e-003, 1.823064e-003, 3.044001e-003, 5.723265e-003, 5.852190e-003, 2.881074e-003, -4.110815e-003, -9.210218e-003, -9.300868e-003, -7.417528e-003, -1.048980e-002, -1.209545e-002, -1.706543e-003, 1.379960e-002, 2.895647e-002, 2.169879e-002, 4.427839e-003, 7.697047e-003, 1.411209e-002, -1.752475e-002, -2.427507e-002, -1.028706e-002, -6.423695e-003, -2.732772e-002, -1.246877e-002, -2.007769e-002, 1.971954e-002, 2.366146e-002, 4.995542e-003, -1.006444e-003, -2.171527e-003, 1.082083e-002, 2.497688e-002, 3.019364e-002, 1.746604e-002, -2.316458e-003, -6.388444e-003, -7.248379e-003, -1.543782e-003, 5.788909e-003, 4.481949e-003, -5.079756e-003, -1.629445e-002, -2.100368e-002, -1.723925e-002, -1.120888e-002, -7.409536e-003, -5.763692e-003, 1.450489e-003, 5.476954e-003, 1.058484e-002, 8.888650e-003, -1.560584e-003, -1.561787e-002, -2.365659e-002, -2.062740e-002, -8.915793e-003, -1.091781e-002, -1.554625e-002, 2.404642e-004, 2.367209e-002, 3.140672e-002, 1.399760e-002, -5.880913e-004, 2.317867e-003, -2.435425e-003, -2.398015e-002, -1.741127e-002, 1.940705e-003, -1.219814e-002, -1.050451e-002, -2.033672e-002, 2.537295e-002, 2.208787e-002, 5.152475e-003, -5.057130e-004, 6.513493e-003, 2.487275e-002, 3.674417e-002, 3.263062e-002, 7.189207e-003, -5.779088e-003, 2.675681e-003, 6.288823e-003, 1.758042e-002, 1.428623e-002, -1.293081e-003, -1.489739e-002, -2.095786e-002, -2.062684e-002, -1.484040e-002, -4.106906e-003, 5.364142e-003, 1.018054e-002, 1.840690e-002, 2.623759e-002, 3.743365e-002, 4.063551e-002, 2.442120e-002, 7.052442e-003, -1.133018e-002, -2.590533e-002, -1.998549e-002, -9.415445e-003, -6.022956e-003, -3.144899e-003, 2.176883e-003, 1.572000e-002, 1.857881e-002, 7.579398e-003, -6.412754e-003, -8.325942e-003, -2.355852e-002, -2.945020e-002, -2.285772e-003, -1.476899e-003, -4.418092e-003, -1.871795e-002, 2.639478e-002, 2.170840e-002, 4.583073e-003, 5.213329e-003, -1.063215e-002, 9.058257e-003, 1.605799e-002, -1.853997e-003, -1.550334e-002, -1.101139e-002, -5.099422e-003, 6.815691e-003, 5.862484e-003, -1.127814e-002, -2.648230e-002, -3.000848e-002, -3.031616e-002, -2.394005e-002, -1.437751e-002, -8.768378e-003, -6.508279e-003, -5.592122e-003, -6.242136e-004, 8.994010e-003, 2.539002e-002, 3.323501e-002, 2.867571e-002, 1.462711e-002, -2.046180e-003, -1.930971e-002, -3.341948e-002, -3.235385e-002, -1.303704e-002, -1.489279e-003, -5.637956e-003, -1.200085e-002, -5.624719e-003, -3.465202e-003, -5.192075e-003, -1.100589e-002, -1.946810e-002, -2.796166e-002, -5.025642e-003, 1.701596e-003, -2.536209e-003, -2.244930e-002, 2.385272e-002, 1.856071e-002, 5.886571e-003, 4.513386e-003, -1.808750e-002, -1.918769e-003, 7.486934e-003, -6.736470e-003, -4.252032e-003, 3.367631e-003, 8.814482e-003, 7.680717e-003, -1.713395e-003, -1.036478e-002, -1.911549e-002, -2.280815e-002, -1.825430e-002, -9.770016e-003, -5.054435e-003, -1.089247e-002, -1.965206e-002, -2.899824e-002, -2.718387e-002, -1.056219e-002, 8.929925e-003, 2.672066e-002, 2.820055e-002, 2.481699e-002, 1.914917e-002, 9.511226e-003, -4.551194e-003, -1.359280e-002, -1.248071e-002, -1.593036e-003, 3.767301e-003, -5.147798e-003, -2.040731e-002, -2.307545e-002, -1.153376e-002, -2.024660e-003, -8.695370e-003, -1.388751e-002, -5.626805e-003, 8.075898e-003, 4.687184e-003, -2.093004e-002, 1.668454e-002, 1.463308e-002, 5.941150e-003, 9.892290e-004, -2.381544e-002, -6.188397e-003, 1.253557e-002, 4.238438e-003, 1.810788e-002, 9.943779e-003, 1.047394e-002, 5.419765e-003, 2.989581e-004, -7.036601e-003, -1.169711e-002, -9.013350e-003, -2.818802e-003, 2.311143e-003, -3.829406e-003, -1.652747e-002, -3.155634e-002, -4.297752e-002, -4.280244e-002, -2.665743e-002, -1.702010e-003, 2.459363e-002, 3.254271e-002, 3.421851e-002, 2.787881e-002, 2.646495e-002, 2.275851e-002, 1.160893e-002, 1.504357e-003, -3.662992e-003, -2.207684e-003, 3.268112e-003, -1.146151e-002, -2.832140e-002, -2.697746e-002, -2.659476e-003, -6.047675e-003, 7.617820e-004, 1.230105e-002, 2.525129e-002, 2.030240e-002, -1.232151e-002, 7.191946e-003, 1.286420e-002, 9.742688e-003, 1.071532e-002, -2.192063e-002, -4.137686e-003, 1.578175e-002, 1.808497e-002, 1.709176e-002, 1.683090e-002, 1.579541e-002, 1.484803e-002, 1.199114e-003, -8.903621e-003, -4.744189e-003, 7.673134e-004,

© ISO/IEC 2004 — All rights reserved


Copyright International Organization for Standardization
Provided by IHS under license with ISO
No reproduction or networking permitted without license from IHS
Not for Resale

6.903707e-003, 1.399459e-002, 1.208993e-002, -1.673095e-003, -2.121559e-002, -3.636652e-002, -3.903035e-002, -2.263318e-002, -3.292515e-003, 1.772349e-002, 2.967131e-002, 3.712626e-002, 3.426715e-002, 3.472941e-002, 3.147010e-002, 2.501476e-002, 1.410371e-002, -6.564219e-004, -4.374100e-003, -3.230519e-004, -1.139681e-004, -2.354032e-002, -2.980225e-002, -6.206901e-003, 3.286725e-004, -6.743111e-004, 1.856603e-002, 3.197313e-002, 2.718705e-002, -4.871354e-003, 1.649344e-003, 1.199130e-002, 1.856875e-002, 2.660999e-002, -1.460012e-002, -6.894505e-004, 1.647662e-002, 1.466708e-002, 1.327375e-002, 2.808150e-002, 2.565847e-002, 2.071080e-002, -7.909995e-004, -4.752122e-003, 7.776241e-004, 1.421375e-002, 2.849025e-002, 3.826978e-002, 3.488396e-002, 1.734471e-002, -5.643642e-003, -2.023778e-002, -1.992822e-002, -1.155298e-002, 1.500990e-003, 7.549088e-003, 1.483984e-002, 1.923896e-002, 1.833387e-002, 1.847459e-002, 2.392633e-002, 1.905983e-002, 1.088179e-002, -6.804443e-004, -9.020082e-003, 2.283670e-003, 2.483564e-003, -7.038035e-003, -2.494980e-002, -1.196782e-002, 6.562011e-003, -2.064933e-003, 1.025550e-002, 3.104631e-002, 5.669757e-003, -6.082954e-003, -5.719319e-003, 2.049236e-003, 2.930390e-002, 3.487966e-002, -8.371925e-003, 4.532123e-003, 1.836389e-002, 4.150844e-003, 1.787444e-002, 3.383754e-002, 3.320438e-002, 1.887335e-002, 2.737029e-003, 1.170902e-002, 2.350995e-002, 3.678490e-002, 4.903025e-002, 5.095023e-002, 4.065350e-002, 1.766367e-002, -5.285184e-003, -1.778111e-002, -1.574317e-002, -1.240356e-002, -9.760458e-003, -1.028274e-002, -8.416441e-003, -7.101905e-003, -6.979149e-003, -9.237267e-003, -4.112835e-003, -6.175579e-003, -7.982057e-003, -6.644004e-003, -1.115721e-002, -7.691439e-003, -5.834047e-004, 1.162155e-003, -1.044522e-002, -1.117687e-002, 9.903122e-003, 4.845479e-003, 1.716477e-004, 2.282990e-002, -4.962873e-004, -9.878306e-003, -9.275655e-003, -5.458484e-003, 3.201743e-002, 3.849687e-002, -5.236700e-003, 6.596136e-003, 9.871404e-003, -6.705369e-004, 2.003288e-002, 3.043716e-002, 2.665343e-002, 1.182533e-002, 9.689413e-003, 3.070791e-002, 4.636674e-002, 5.284995e-002, 5.321766e-002, 5.323366e-002, 4.319001e-002, 1.794153e-002, -2.650793e-003, -1.292022e-002, -1.726042e-002, -1.389119e-002, -1.346006e-002, -1.931407e-002, -1.873043e-002, -2.061596e-002, -2.017366e-002, -2.358031e-002, -2.341122e-002, -2.828687e-002, -2.777380e-002, -2.129196e-002, -1.563976e-002, -1.309788e-002, -1.866550e-003, 7.739516e-003, 2.485512e-003, -4.131376e-003, 9.893646e-003, 7.943830e-003, -4.869670e-003, 1.032730e-002, -1.125597e-002, -1.771498e-002, -1.334025e-002, -8.834550e-003, 3.255491e-002, 1.952315e-002, 2.090090e-003, -9.186512e-004, 6.330026e-004, -1.191679e-003, 1.720375e-002, 2.326848e-002, 1.309512e-002, 4.894559e-003, 1.224392e-002, 3.516029e-002, 4.699179e-002, 4.762752e-002, 4.615564e-002, 4.801822e-002, 3.746467e-002, 1.680005e-002, 5.968464e-003, -3.076886e-003, -9.237330e-003, -7.559520e-003, -1.024023e-002, -1.574472e-002, -1.754257e-002, -1.843346e-002, -1.756740e-002, -2.345831e-002, -3.010656e-002, -3.451147e-002, -3.788998e-002, -3.364433e-002, -2.372812e-002, -1.170726e-002, -6.791378e-003, 8.448553e-003, 7.348412e-003, -1.527536e-003, 7.981993e-003, 1.050114e-002, -9.338100e-003, -5.249129e-003, -1.357973e-002, -1.808664e-002, -2.093604e-002, -1.532341e-002, 2.120747e-002, 1.113542e-002, -2.656667e-003, -1.056658e-002, -1.954316e-004, -6.162946e-003, 6.455986e-003, 6.015808e-003, -3.284404e-003, -6.617098e-004, 5.626873e-003, 2.151415e-002, 2.623923e-002, 2.474809e-002, 2.415070e-002, 2.471229e-002, 1.917917e-002, 7.329793e-003, 5.187405e-003, -1.451651e-003, -1.538913e-003, -1.075346e-004, -3.082003e-003, -9.556765e-004, -4.052768e-003, -2.563920e-003, 5.615148e-004, -5.467286e-003, -1.490162e-002, -2.302656e-002, -3.540306e-002, -3.822691e-002, -3.059901e-002, -1.113387e-002, -6.571044e-003, -2.296609e-004, 3.944229e-003, 4.995917e-003, 8.713219e-003, 1.377612e-002, -1.599277e-002, -1.048678e-002, -8.838749e-003, -6.040913e-004, -2.865147e-002, -2.367064e-002, 1.017237e-002, 6.035436e-003, -9.007060e-003, -1.402656e-002, 2.910852e-004, -1.440009e-002, -1.070135e-002, -1.418263e-002, -1.692718e-002, -1.208218e-002, -6.481560e-003, -1.229782e-003, -5.156889e-003, -1.098289e-002, -9.066397e-003, -8.800741e-003, -9.728859e-003, -1.033573e-002, -7.440352e-003, -9.204868e-003, -5.705481e-003, -3.019712e-003, 6.593648e-004, 1.023013e-002, 1.110083e-002, 1.799014e-002, 2.299197e-002, 1.982254e-002, 1.186148e-002, -1.013981e-003, -2.092448e-002, -3.455235e-002, -3.438313e-002, -1.493838e-002, -3.785241e-003, -3.783485e-003, 5.728766e-003, 7.025077e-003, 1.665863e-002, 2.654052e-002, -1.247416e-002, -9.758408e-003, 1.627402e-003, 1.468731e-002, -3.231258e-002, -2.351819e-002, 2.543177e-003, -2.921106e-003, -1.397603e-002, -1.785859e-002, 3.800679e-004, -1.929428e-002, -2.638667e-002, -2.260532e-002, -1.777999e-002, -2.042541e-002, -2.230646e-002, -2.422735e-002, -3.378059e-002, -3.708979e-002, -3.656395e-002, -3.648896e-002, -3.555956e-002, -3.310185e-002, -2.595050e-002, -2.082665e-002, -1.706806e-002, -1.110206e-002, -3.025529e-004, 1.039241e-002, 1.862950e-002, 2.846413e-002, 3.654822e-002, 4.153844e-002, 4.040220e-002, 2.655789e-002, 9.549611e-003, -1.130371e-002, -2.346659e-002, -1.418646e-002, -2.028014e-003, -1.439510e-003, 7.021778e-003, 5.590091e-003, 1.895768e-002, 3.434698e-002, -9.903444e-004, -1.203215e-003, 1.734593e-002, 2.641528e-002, -2.869680e-002, -1.797360e-002, 2.543321e-003, -1.197901e-002, -1.947704e-002, -1.711260e-002, -6.507315e-004, -1.731102e-002, -2.899887e-002, -1.779066e-002, -1.542127e-002, -2.483304e-002, -3.086848e-002, -3.534183e-002, -3.851184e-002, -3.514734e-002, -3.397330e-002, -3.871925e-002, -4.416120e-002, -4.358150e-002, -3.903633e-002, -3.663069e-002, -3.079319e-002, -1.988902e-002, -8.854588e-003, -2.923463e-003, 1.111129e-002, 2.921127e-002, 4.877625e-002, 5.943604e-002, 6.098862e-002, 5.044904e-002,


© ISO/IEC 2004 — All rights reserved

--`,,```,,,,````-`-`,,`,,`,`,,`---

Copyright International Organization for Standardization
Provided by IHS under license with ISO
No reproduction or networking permitted without license from IHS

Not for Resale

3.687617e-002, 1.427630e-002, -2.115328e-003, -4.383238e-004, 1.509448e-003, 6.864551e-006, 5.634396e-003, 7.764042e-003, 2.659072e-002, 3.034570e-002, 6.616920e-003, 1.065123e-002, 2.906473e-002, 3.388783e-002, -2.320432e-002, -1.239320e-002, 4.489995e-003, -1.352240e-002, -1.755832e-002, -1.233752e-002, 1.652284e-003, -1.479275e-002, -2.509149e-002, -9.088301e-003, -1.073417e-002, -2.531808e-002, -3.575916e-002, -3.727820e-002, -2.492026e-002, -1.088036e-002, -1.875060e-003, -1.470608e-003, -1.136421e-002, -2.339276e-002, -3.488829e-002, -3.788108e-002, -3.521581e-002, -2.820517e-002, -2.079836e-002, -1.785064e-002, -2.002326e-003, 2.305804e-002, 5.138716e-002, 6.686224e-002, 6.272236e-002, 4.874630e-002, 3.486945e-002, 1.775898e-002, 1.440861e-003, 1.208589e-003, 3.429298e-003, -1.364019e-003, 5.594046e-003, 5.775013e-003, 1.729869e-002, 2.093642e-002, 6.859777e-003, 1.947907e-002, 3.582137e-002, 3.591916e-002, -2.160288e-002, -7.653983e-003, 9.975706e-003, -1.342340e-002, -1.602497e-002, -6.543400e-003, 5.679871e-004, -1.561656e-002, -1.493309e-002, -5.396014e-003, -3.489391e-003, -1.100610e-002, -2.600816e-002, -3.729637e-002, -3.531027e-002, -2.291624e-002, -2.891685e-003, 2.012399e-002, 3.097636e-002, 2.407304e-002, 7.497886e-004, -2.148222e-002, -2.968518e-002, -3.252976e-002, -2.896879e-002, -3.036946e-002, -2.104562e-002, 1.041567e-003, 1.588703e-002, 8.496278e-003, -6.561587e-003, -2.012272e-002, -2.408101e-002, -2.269711e-002, -1.710805e-002, -1.158229e-002, -1.478960e-003, -5.212406e-003, 4.151825e-003, 1.231099e-003, 8.115756e-003, 6.394836e-003, 1.290651e-003, 1.356437e-002, 3.001991e-002, 3.197355e-002, -2.172651e-002, -3.612608e-003, 1.325018e-002, -1.206123e-002, -1.877110e-002, 9.106248e-004, -3.552991e-003, -1.824964e-002, -7.134629e-003, -5.324552e-003, -4.688317e-003, 3.097155e-003, -6.980619e-003, -1.335066e-002, -2.113987e-002, -2.816236e-002, -2.446670e-002, -3.612818e-003, 3.416320e-002, 5.547690e-002, 5.686365e-002, 2.935478e-002, 8.969898e-003, -1.544730e-003, 1.009395e-003, 2.339933e-003, 2.180429e-003, 9.073526e-003, 4.898722e-003, -9.578700e-003, -2.195915e-002, -2.689111e-002, -2.106712e-002, -1.294215e-002, -9.551444e-003, -1.304075e-002, -1.078773e-002, -8.921643e-003, -1.229963e-004, -7.454986e-004, -1.613356e-003, -8.609274e-003, -1.135958e-002, 6.482970e-003, 1.342727e-002, 8.487697e-003, -2.224166e-002, -6.500689e-003, -2.418703e-003, -1.034277e-002, -1.096806e-002, 9.672108e-003, -8.096766e-004, -1.695457e-002, 7.982942e-004, -5.037333e-005, 2.107163e-003, 2.264247e-002, 3.512502e-002, 4.253470e-002, 3.261244e-002, 1.124213e-002, -1.288857e-002, -1.924297e-002, 4.723699e-003, 3.863811e-002, 7.141873e-002, 7.185861e-002, 5.388265e-002, 4.251345e-002, 4.452534e-002, 4.285199e-002, 3.137856e-002, 1.429110e-002, -2.116237e-003, -6.354759e-003, -4.693688e-004, 2.300373e-002, 3.677545e-002, 3.831567e-002, 2.920045e-002, 2.067929e-002, 1.072940e-002, -3.083646e-003, 3.344131e-003, 7.707747e-003, -1.370219e-003, -1.890628e-002, -1.695488e-002, -5.465004e-003, -8.064262e-003, -1.723448e-002, -1.650780e-002, -3.458928e-003, -2.850314e-003, 4.215205e-004, 4.251850e-003, 1.593705e-002, 3.293601e-003, -1.180850e-002, 7.725206e-003, -6.926152e-003, -5.674907e-003, 1.734197e-002, 3.446571e-002, 5.345511e-002, 5.075563e-002, 2.187384e-002, -1.925856e-002, -5.280630e-002, -6.402749e-002, -3.687929e-002, 1.971816e-002, 5.146529e-002, 3.328762e-002, 1.395828e-002, 2.072626e-002, 1.911358e-002, -2.054622e-002, -5.987130e-002, -7.621989e-002, -5.479954e-002, -1.008730e-002, 2.441243e-002, 4.078612e-002, 4.354687e-002, 2.875372e-002, 2.274912e-002, 1.603443e-002, 3.775101e-003, 1.096055e-002, 1.617888e-002, 3.450990e-003, -1.924583e-002, -1.602093e-002, -1.704375e-002, -2.266611e-002, -3.063984e-002, -1.449032e-002, -5.203646e-003, -9.754748e-003, 9.114268e-003, 2.372510e-002, 1.998344e-002, -2.725923e-003, -4.265425e-004, 1.402055e-002, -1.222092e-002, -2.088040e-002, -2.185316e-003, 2.656832e-002, 4.623437e-002, 5.080350e-002, 3.930335e-002, 9.977426e-003, -1.705123e-002, -4.850161e-002, -6.425264e-002, -3.817204e-002, -5.814799e-003, -2.351709e-002, -4.778440e-002, -3.472896e-002, -2.635617e-002, -5.462104e-002, -7.250867e-002, -6.600406e-002, -2.168483e-002, 2.428001e-002, 4.782475e-002, 5.591575e-002, 4.525432e-002, 1.865090e-002, -2.773279e-003, -1.133946e-002, -1.176044e-002, 8.410793e-003, 1.435239e-002, 4.436746e-004, -2.721519e-002, -1.469977e-002, -2.319230e-002, -3.600273e-002, -4.488841e-002, -3.295914e-003, -6.094041e-003, -2.315274e-002, 1.552404e-002, 4.482566e-002, 1.497408e-002, -4.359168e-003, -5.132451e-003, 1.281579e-002, -2.164577e-002, -3.638526e-002, -1.543694e-002, 6.476621e-003, 8.897475e-003, 2.242834e-002, 2.056724e-002, 1.116220e-002, -2.865686e-003, -1.040947e-002, -1.680601e-002, -2.878358e-002, -2.734990e-002, -4.305886e-002, -7.033096e-002, -6.302047e-002, -2.285972e-002, -1.520008e-002, -2.983576e-002, -3.964110e-002, -1.825040e-002, -1.455337e-002, -4.100466e-002, -5.317669e-002, -1.562182e-002, -8.077329e-003, -2.060922e-002, -3.534551e-002, -4.303929e-002, -1.735210e-002, 8.329764e-003, 2.307700e-003, -3.155379e-002, -8.764809e-003, -3.499717e-002, -4.426984e-002, -3.183986e-002, 2.230905e-002, -3.902302e-003, -2.278801e-002, 1.973607e-002, 3.656777e-002, 2.836089e-003, -6.929458e-003, -8.833875e-003, 1.648534e-003, -2.529111e-002, -3.930250e-002, -2.313359e-002, -4.968372e-003, 1.868240e-002, 4.177193e-002, 3.154186e-002, 2.809606e-002, 3.585556e-002, 3.573667e-002, 2.801893e-002, 9.954138e-003, -1.391175e-002, -2.153493e-002, -3.106173e-002, -3.606228e-002, 9.007201e-003, 3.827388e-002, 3.421513e-002, 3.014104e-002, 2.711245e-002, -6.174927e-003, -4.286099e-002, -3.708432e-002, -3.984002e-002, -3.222679e-002, -2.805274e-002, -4.312734e-002, -5.799551e-002, -2.182375e-002, 2.251742e-002, 1.014132e-002, -2.398404e-002, -2.201705e-003, -2.725908e-002, -2.590560e-002, -1.577472e-003, 2.060441e-002, 9.969837e-004, -

© ISO/IEC 2004 — All rights reserved


Copyright International Organization for Standardization
Provided by IHS under license with ISO
No reproduction or networking permitted without license from IHS
Not for Resale

1.246641e-002, 5.791759e-003, 5.482516e-003, -1.526629e-002, -9.340156e-003, -1.806950e-002, -5.505142e-003, -2.859035e-002, -2.584304e-002, -8.421957e-003, 1.239581e-002, 3.267468e-002, 4.990612e-002, 4.484899e-002, 3.487994e-002, 3.110955e-002, 3.008999e-002, 3.657286e-002, 3.273050e-002, 2.367403e-004, 1.571529e-002, 9.197517e-003, -5.610624e-003, 2.528237e-002, 5.390571e-002, 5.287181e-002, 3.684804e-002, 3.550615e-002, 3.279745e-002, 3.333549e-002, 2.663217e-002, 2.199873e-002, 1.855487e-002, 9.735517e-003, -1.390808e-002, -2.365921e-002, 4.898055e-004, 3.335164e-002, 1.183896e-002, -2.078445e-002, 2.897113e-003, -3.333101e-003, 4.488456e-003, 2.196926e-002, 1.043793e-002, 8.894604e-003, 5.520630e-003, 8.986025e-004, -2.146002e-002, -1.872519e-002, -3.636603e-003, -1.209850e-002, 5.055500e-003, -1.233049e-002, -1.044331e-003, 6.212532e-003, 7.001290e-003, 1.574083e-003, -9.931911e-003, -2.325938e-002, -3.554053e-002, -3.281298e-002, -1.288827e-002, 2.161270e-002, 3.914630e-002, 1.240908e-002, 4.141531e-002, 3.506089e-002, 1.064906e-002, 1.681084e-002, 5.457310e-002, 3.435329e-002, 5.141488e-003, -3.967850e-003, 1.052892e-003, 1.862926e-002, 2.989056e-002, 3.916085e-002, 4.770887e-002, 3.610024e-002, 1.049157e-002, -1.428483e-003, -2.202096e-003, 2.647730e-002, 1.636569e-002, -1.390451e-002, 2.489091e-003, 1.209005e-002, 2.947861e-002, 2.426690e-002, 5.131564e-003, 1.181525e-002, 1.427055e-002, -1.940203e-003, -4.009526e-002, -8.541624e-003, 6.204931e-003, -1.665573e-003, 1.850426e-002, 9.744133e-003, 1.570694e-002, 5.479314e-003, -7.333278e-003, -2.856909e-002, -5.473525e-002, -6.725522e-002, -7.184082e-002, -5.753527e-002, -2.553707e-002, 1.649263e-002, 1.827341e-002, 1.031860e-002, 4.129061e-002, 3.443414e-002, 9.243751e-003, 7.231901e-004, 4.638158e-002, 3.535133e-002, -5.711101e-003, -2.792521e-002, -3.130952e-002, -1.563030e-002, 1.680436e-003, 2.027540e-002, 4.332590e-002, 4.654837e-002, 2.723293e-002, 1.495743e-002, -5.337653e-003, 1.798662e-002, 1.914381e-002, 1.838659e-003, 1.386878e-002, 2.177620e-002, 3.321780e-002, 1.783794e-002, 1.433068e-003, 3.112490e-003, 1.264563e-002, -7.196897e-003, -3.797466e-002, 1.849825e-003, 1.388668e-002, -1.666594e-003, 1.579256e-002, 2.472768e-002, 1.690100e-002, 1.564884e-003, -1.767371e-002, -3.585760e-002, -6.148981e-002, -7.165256e-002, -6.436509e-002, -3.655485e-002, -4.767002e-003, 1.550098e-002, -9.813358e-003, 3.679773e-003, 2.683533e-002, 2.391046e-002, -3.132924e-004, -1.599265e-002, 1.745392e-002, 4.792744e-002, 1.766676e-002, -1.452712e-002, -3.078236e-002, -2.701471e-002, -1.360014e-002, 1.192058e-002, 3.806470e-002, 4.824944e-002, 3.703674e-002, 2.119579e-002, -3.121501e-003, 1.100735e-002, 2.225105e-002, 2.096169e-002, 1.326735e-002, 1.170857e-002, 1.870442e-002, -3.195018e-003, -6.153542e-003, -2.162489e-002, 3.989879e-003, -4.852577e-003, -1.648803e-002, 1.282531e-002, 1.275616e-002, -8.230651e-003, 1.614818e-002, 2.755045e-002, 1.981385e-002, -3.308619e-003, -1.395860e-002, -2.446944e-002, -3.858738e-002, -3.692802e-002, -1.801055e-002, 6.768713e-003, 1.598678e-002, 1.549944e-005, -1.992568e-002, -4.288583e-003, 1.453188e-002, 9.880558e-003, -1.532866e-002, -2.732414e-002, -1.745906e-002, 2.481103e-002, 4.611544e-002, 3.132665e-002, 8.389218e-003, -1.303331e-003, 3.694307e-003, 1.629349e-002, 2.607501e-002, 2.654658e-002, 3.562560e-002, 2.252882e-002, -3.679941e-003, 4.224993e-004, 1.799634e-002, 1.697604e-002, 7.186940e-003, 7.330363e-003, 2.283300e-003, -1.420265e-002, -1.297812e-003, -1.778212e-002, 3.588547e-003, 3.832882e-003, 7.759411e-004, 1.250746e-002, 3.553443e-003, -1.185506e-002, 7.392378e-003, 2.195544e-002, 4.998402e-003, -1.970924e-002, -2.697526e-002, -1.592841e-002, -4.990024e-003, 6.897026e-003, 1.831375e-002, 1.390100e-002, 2.334105e-003, -1.446831e-002, -1.868774e-002, -8.902626e-003, 9.037878e-003, 1.005351e-003, -2.895864e-002, -4.062488e-002, -3.404891e-002, -1.711374e-002, 1.417634e-002, 2.881296e-002, 2.081863e-002, 1.010484e-002, 3.031198e-003, -1.913919e-003, -5.732324e-003, 2.280339e-003, 2.122350e-002, 2.271809e-002, -3.283949e-003, -1.026102e-002, 4.688656e-003, 2.856093e-003, 3.504881e-003, 1.145482e-004, -1.406461e-002, -3.374059e-002, 9.294081e-003, -6.477110e-003, 1.383688e-002, 2.406567e-002, 7.067386e-003, -4.316032e-003, -1.455825e-002, -2.326408e-002, -5.469737e-003, 1.321569e-002, -5.390404e-003, -3.904999e-002, -5.277101e-002, -4.408438e-002, -3.334461e-002, -1.875199e-002, -1.177793e-002, -1.190871e-002, -4.183045e-003, -1.058748e-002, -1.712398e-002, -6.192251e-003, 8.820226e-003, 4.355087e-003, -1.533661e-002, -2.544278e-002, -3.100549e-002, -3.162686e-002, -1.402469e-002, -1.744777e-003, -1.028822e-003, -9.098821e-003, -1.774088e-002, -2.309587e-002, -2.634778e-002, -1.472636e-002, 1.666288e-002, 1.991442e-002, -5.510120e-003, -1.354932e-002, -9.768790e-003, -1.217507e-002, -5.437340e-003, -6.305992e-003, -1.976547e-002, -6.419369e-003, 1.168992e-002, -4.646325e-003, 1.986681e-002, 3.913384e-002, 7.467679e-003, -8.944858e-003, -2.237813e-002, -2.893610e-002, -1.236827e-002, 8.919618e-003, -6.961486e-003, -3.526946e-002, -5.170132e-002, -5.081091e-002, -3.973101e-002, -2.195689e-002, -1.091046e-002, -7.146904e-003, 3.845844e-003, -8.100382e-003, -1.842538e-002, -5.698876e-003, 4.361709e-003, -6.096414e-003, -1.820054e-002, -7.254956e-003, 9.972240e-006, -1.870560e-002, -1.171749e-002, -8.422022e-003, -9.386537e-003, -1.475162e-002, -2.493892e-002, -3.470710e-002, -3.773854e-002, -2.236779e-002, 1.136950e-002, 1.312820e-002, -4.740795e-003, -1.210606e-002, -2.260667e-002, -2.380462e-002, 2.645878e-003, -1.000273e-002, -2.343012e-002, -7.675104e-003, 1.813613e-002, 7.160561e-004, 1.703784e-002, 3.214390e-002, 7.143009e-003, -7.555559e-003, -1.476684e-002, -2.135126e-002, -1.160650e-002, 9.007940e-003, 3.994410e-003, -1.725915e-002, -3.126256e-002, -2.805444e-002, -1.186956e-002, 4.231350e-003, 2.989570e-003, -4.272031e-003,


© ISO/IEC 2004 — All rights reserved

Copyright International Organization for Standardization
Provided by IHS under license with ISO
No reproduction or networking permitted without license from IHS
Not for Resale

7.342326e-003, 9.976931e-005, -3.184548e-002, -2.733168e-002, -1.519660e-002, -1.983610e-002, -3.914089e-002, -2.531678e-002, 1.281932e-002, 4.104222e-003, -1.662478e-003, 1.947460e-004, -4.492941e-003, -6.967451e-003, -1.264042e-002, -2.684537e-002, -3.384558e-002, -1.678374e-002, 1.243668e-002, 5.796463e-003, -3.506636e-003, -1.119301e-002, -1.829145e-002, -8.327112e-003, 1.801704e-002, -4.031115e-003, -2.523598e-002, -3.263219e-003, 2.488244e-002, 7.367288e-003, 1.800190e-002, 1.724503e-002, 4.397157e-003, 6.105842e-003, 6.306306e-003, -9.233393e-003, -4.669599e-003, 1.126266e-002, 1.356517e-002, 4.099285e-003, -5.032006e-004, 5.147833e-003, 1.684719e-002, 2.242890e-002, 1.490451e-002, 1.372788e-002, 1.467772e-002, -2.602070e-003, -2.421663e-002, -1.854541e-002, -9.839559e-003, -1.362273e-003, -1.657490e-002, -2.881891e-002, 8.486800e-004, 1.029478e-002, 1.032407e-002, 1.159979e-002, 1.052158e-002, 1.120167e-002, 6.694582e-003, -1.334266e-002, -2.434430e-002, -8.380164e-003, 1.302113e-002, -2.620228e-004, -6.378221e-003, -3.576353e-003, -6.769219e-003, 1.139198e-002, 1.791318e-002, -1.113089e-002, -1.476980e-002, -9.572951e-004, 3.392154e-002, 1.187274e-002, 1.280405e-002, 8.044130e-003, -5.791902e-003, 8.306155e-003, 1.975463e-002, 6.363638e-003, -4.617374e-003, 1.714467e-002, 1.711701e-002, 1.799130e-002, 2.613805e-002, 3.015035e-002, 3.070320e-002, 3.080960e-002, 2.886679e-002, 3.235282e-002, 1.763549e-002, -7.859964e-003, -2.856323e-002, -2.561093e-002, -1.885847e-003, 1.602365e-002, 3.671200e-003, -2.399640e-002, -3.304257e-002, -1.624480e-002, 1.082161e-003, 1.568884e-002, 2.673721e-002, 3.349679e-002, 2.327153e-002, 1.653546e-004, -1.497692e-002, 2.981892e-004, 7.225509e-003, -8.795127e-003, -1.699667e-003, -7.643608e-005, -3.194096e-003, 1.203923e-002, 7.794018e-003, -1.534526e-002, -6.502771e-003, 3.384315e-003, 3.022402e-002, 5.249124e-003, 7.446647e-003, 1.091235e-002, -1.086058e-002, 1.109591e-003, 1.882797e-002, 2.791781e-002, 4.099160e-003, 1.971733e-002, 1.928068e-002, 2.154982e-002, 3.716879e-002, 4.438653e-002, 4.028861e-002, 3.474521e-002, 3.578929e-002, 3.091328e-002, 1.719708e-002, -2.005358e-003, -1.486784e-002, -3.717213e-003, 1.283001e-002, 2.571022e-002, 1.426705e-002, -6.648471e-003, -2.298902e-002, -2.824757e-002, -1.399003e-002, 6.789647e-003, 3.028226e-002, 4.636228e-002, 3.275742e-002, 4.428852e-003, -8.108744e-003, 6.272926e-003, 1.268157e-003, -1.101032e-002, 6.461461e-003, 1.561722e-003, -1.425774e-002, -1.227661e-002, -6.415045e-003, -1.003004e-002, 5.456359e-003, 9.424951e-003, 1.897426e-002, 4.468957e-003, 6.312023e-003, 8.570749e-003, -1.234288e-002, -1.315890e-002, 8.334902e-004, 2.229103e-002, 8.471228e-003, 1.959747e-002, 1.551280e-002, 1.620123e-002, 3.655176e-002, 4.721861e-002, 4.112037e-002, 3.250703e-002, 2.820026e-002, 1.636282e-002, 5.066612e-003, 1.627885e-003, 1.316594e-002, 2.790936e-002, 3.291109e-002, 3.285157e-002, 2.532351e-002, 5.896416e-003, -1.558320e-002, -3.313392e-002, -3.021961e-002, -8.817597e-003, 2.164315e-002, 4.481186e-002, 3.097178e-002, 2.977593e-003, -1.027112e-002, 3.641876e-003, -6.400248e-003, -1.765619e-003, 1.070139e-002, -9.394946e-003, -3.588009e-002, -3.209059e-002, -1.302656e-002, 4.724684e-003, 1.406336e-002, 9.339874e-003, 3.274612e-003, 1.577172e-002, 8.940460e-003, 1.239254e-002, 4.450013e-003, -2.390401e-003, -4.440655e-003, 1.468985e-002, 8.197299e-003, 1.860864e-002, 1.348955e-002, 1.017698e-002, 2.908136e-002, 4.403433e-002, 4.068000e-002, 2.975429e-002, 1.404395e-002, -1.271468e-002, -2.134624e-002, -1.999896e-002, -3.362826e-004, 7.685099e-003, 5.507209e-003, 3.506262e-003, 6.029644e-003, -1.260027e-003, -2.084449e-002, -4.093204e-002, -4.699289e-002, -3.238949e-002, -2.134263e-003, 2.224258e-002, 1.676498e-002, -1.530674e-003, -8.083691e-003, -1.192592e-003, -1.372477e-002, 9.698986e-003, 7.862020e-003, -1.283426e-002, -2.895846e-002, -2.308133e-002, -3.713093e-003, 1.731997e-002, 1.309893e-002, 7.668596e-003, -2.619280e-003, 1.014037e-002, 3.647816e-003, 1.128553e-002, 1.640253e-002, 1.346110e-002, -3.175826e-003, 1.942333e-002, 2.554714e-002, 2.582667e-002, 1.453254e-002, 4.011274e-003, 1.506438e-002, 4.055749e-002, 3.863508e-002, 1.300395e-002, -1.738665e-002, -2.952105e-002, -2.656858e-002, -1.467255e-002, 1.915502e-003, 1.520079e-002, 2.409151e-002, 3.001917e-002, 3.086603e-002, 2.366217e-002, 1.547437e-002, 1.442627e-004, -9.795434e-003, -2.451445e-002, -2.323188e-002, -7.161092e-003, 3.075896e-004, -6.268988e-003, -1.444359e-003, -4.627457e-003, -1.321883e-002, 9.293299e-003, -2.939190e-003, 7.592904e-004, 7.994692e-004, 5.625599e-004, 1.448311e-002, 1.256483e-002, 6.932094e-004, 9.245768e-003, -1.624374e-002, -8.790110e-003, -1.214298e-002, 8.164427e-003, 1.186076e-002, 1.447281e-002, -2.248555e-003, 1.743497e-002, 3.513414e-002, 2.860582e-002, 1.465649e-002, -8.309649e-004, 6.957355e-003, 3.095884e-002, 2.835134e-002, -7.817710e-003, -3.287716e-002, -3.546703e-002, -2.135741e-002, -8.884015e-003, 5.048322e-003, 2.374740e-002, 3.448095e-002, 3.831783e-002, 2.273278e-002, 1.927474e-003, -1.913359e-002, -3.411043e-002, -3.855340e-002, -3.278939e-002, -3.244804e-002, -2.726297e-002, -1.679971e-002, -1.141830e-002, 4.440111e-004, -5.782342e-003, -5.473911e-003, 9.011018e-003, -1.184758e-002, 2.075576e-002, 2.477413e-002, 2.040548e-002, 2.288267e-002, 2.447968e-003, -3.395970e-003, 1.462863e-002, -1.548863e-002, -1.052652e-002, -1.989893e-002, 2.209795e-003, 1.032992e-002, 1.355766e-002, -4.445977e-003, 6.463432e-003, 2.830641e-002, 2.335744e-002, 1.248174e-002, -9.074218e-003, -4.816375e-003, 1.986704e-002, 2.581353e-002, 4.563039e-003, -1.179889e-002, -1.823418e-002, -2.103913e-002, -1.466176e-002, -7.488123e-003, 6.443552e-003, 1.474569e-002, 1.151350e-002, 4.727047e-004, -1.659923e-002, -3.167789e-002, -4.150428e-002, -4.133242e-002, -3.100457e-002, -3.135580e-002, -3.247336e-002, -2.464023e-002, -1.369004e-002, -

© ISO/IEC 2004 — All rights reserved


--`,,```,,,,````-`-`,,`,,`,`,,`---

Copyright International Organization for Standardization
Provided by IHS under license with ISO
No reproduction or networking permitted without license from IHS
Not for Resale

2.515569e-003, -3.052214e-003, 6.029533e-003, 1.885744e-003, -9.376791e-003, 1.845874e-002, 1.854968e-002, 1.439412e-002, 9.336481e-003, -2.203790e-003, -3.417942e-003, 2.130244e-002, -1.334926e-002, -1.060378e-002, -3.091130e-002, -1.938615e-002, -4.000027e-003, 8.642096e-003, -7.619621e-003, -3.126118e-003, 1.236567e-002, 7.872844e-003, 4.539979e-003, -1.777836e-002, -1.530713e-002, 3.187726e-003, 1.935334e-002, 1.857162e-002, 9.143449e-003, -5.342500e-003, -2.025789e-002, -2.007309e-002, -1.435359e-002, 2.802291e-003, 1.774339e-002, 2.586173e-002, 2.329266e-002, 1.632023e-002, 1.043445e-002, 5.208832e-003, 2.838516e-003, -1.032611e-002, -2.534797e-002, -2.734812e-002, -2.373383e-002, -1.259216e-002, -8.507947e-003, -2.114070e-004, 1.428019e-002, -5.238270e-003, -7.741351e-004, 9.449725e-003, 1.917784e-003, -6.659574e-003, -1.194158e-002, 1.079242e-003, -2.493695e-003, 2.713414e-002, -1.068046e-002, -4.435514e-003, -2.645893e-002, -2.926513e-002, -1.982468e-002, -3.516135e-004, -7.157606e-003, -1.169896e-002, -6.399061e-003, -2.003214e-002, -1.532684e-002, -1.470727e-002, -1.833778e-002, -9.609949e-003, 9.182085e-003, 2.203255e-002, 1.514049e-002, 5.651230e-004, -1.192339e-002, -1.611073e-002, -1.347566e-002, 1.395212e-003, 1.744785e-002, 2.663190e-002, 2.874175e-002, 2.590657e-002, 2.700887e-002, 2.523977e-002, 1.658856e-002, -6.176682e-004, -1.547236e-002, -1.834776e-002, -1.297363e-002, -1.184302e-002, -1.221105e-002, 8.426523e-003, 1.979843e-002, 2.623472e-003, 1.173386e-002, 5.353009e-003, -1.093257e-002, -1.135355e-002, -8.625407e-003, 4.947194e-003, 1.049394e-004, 2.770277e-002, 3.961169e-003, 7.477547e-003, -1.117187e-002, -1.566938e-002, -2.330400e-002, -1.204652e-002, -5.873006e-003, -8.103909e-003, -1.792006e-002, -4.277895e-002, -2.941184e-002, -1.237220e-002, -1.543989e-002, -1.890842e-002, -6.650607e-003, 1.164633e-002, 1.022549e-002, 2.074235e-003, -8.505382e-003, -1.380941e-002, -1.216600e-002, -4.705561e-004, 7.716456e-003, 1.065849e-002, 1.359291e-002, 1.263789e-002, 9.597723e-003, 7.173615e-003, 2.758008e-003, -4.237817e-003, -4.923572e-003, -1.755445e-003, 5.366404e-004, -3.120921e-003, -6.619016e-003, 1.331064e-002, 1.425790e-002, 2.015932e-002, 3.223977e-002, 1.169596e-002, -8.112741e-003, -1.140599e-003, 9.847014e-003, 1.430791e-002, -5.785782e-003, 1.646088e-002, 1.595488e-002, 1.361975e-002, 9.183799e-003, -1.101293e-003, -1.064309e-002, -1.602114e-002, -1.546650e-002, -9.021365e-003, -1.300216e-002, -4.461248e-002, -2.853631e-002, -1.601895e-003, -4.672479e-003, -2.020242e-002, -1.842347e-002, -2.510302e-003, 2.219678e-003, -3.935281e-004, -7.159674e-003, -9.393452e-003, -3.235616e-003, 7.085654e-003, 9.289566e-003, 1.235179e-002, 1.308702e-002, 7.392990e-003, 2.476400e-003, -2.409576e-003, -6.231285e-003, -5.923998e-003, 1.468623e-003, 1.096321e-002, 1.113350e-002, 3.699953e-003, -2.457768e-003, 9.344921e-003, -2.312762e-003, 2.305653e-002, 3.386723e-002, 8.507520e-003, -8.245518e-003, 2.382068e-003, 1.568330e-002, 5.260943e-003, -2.061911e-002, -4.642354e-003, 1.342332e-002, 1.284884e-002, 9.330595e-003, 1.218759e-002, 6.312623e-003, -5.131374e-003, -6.369256e-003, -2.899933e-003, -4.154724e-004, -1.852593e-002, -1.103740e-002, 1.258755e-002, 8.973597e-003, -1.024158e-003, -1.571272e-002, -1.135321e-002, -6.050086e-003, -3.024449e-003, -3.895166e-003, -4.228542e-003, 2.146498e-003, 9.353739e-003, 1.295163e-002, 1.788309e-002, 1.448637e-002, 1.092202e-002, 6.623887e-003, 2.874621e-003, -3.369027e-005, 3.540467e-003, 1.401919e-002, 2.251267e-002, 1.562404e-002, 6.447755e-003, -5.986713e-003, -1.228446e-002, -9.202314e-003, 1.001549e-002, 2.698703e-002, 6.107860e-003, -1.674185e-002, -2.867033e-003, 1.116385e-002, -2.949744e-004, -2.774853e-002, -1.357715e-002, 6.852047e-003, 4.064898e-003, 8.165487e-003, 1.004540e-002, 1.511982e-002, 6.135703e-003, 5.992736e-003, 1.510173e-003, -5.876208e-003, -8.173374e-003, 6.854698e-003, 7.636365e-003, 1.419104e-002, 1.853255e-002, 3.806685e-003, -4.422216e-003, -4.704507e-003, -5.222026e-003, -9.199036e-003, -1.234927e-002, -1.465537e-002, -1.237741e-002, -4.122689e-003, 5.499661e-004, 3.202623e-004, 4.601477e-004, 6.850596e-003, 1.122092e-002, 1.255235e-002, 1.476368e-002, 2.150469e-002, 2.184481e-002, 1.067773e-002, -7.722756e-004, -1.982565e-002, -2.897198e-002, -2.224827e-002, -1.485200e-002, 1.644116e-002, 1.572161e-002, -1.095537e-002, -1.050379e-002, -1.365232e-004, 3.037399e-003, -2.385523e-002, -1.214880e-002, -1.522126e-003, -8.664493e-003, -7.703814e-003, -5.345696e-003, 1.223691e-002, 4.725631e-003, 6.887552e-004, -1.629622e-002, -2.689655e-002, -2.451780e-003, 2.165237e-002, 1.622244e-004, 4.508096e-003, 2.408184e-002, 2.237581e-002, 8.216993e-003, 3.838188e-003, -2.172363e-003, -2.445558e-003, -1.298451e-002, -2.201192e-002, -2.329648e-002, -1.963408e-002, -1.408712e-002, -1.212452e-002, -5.683311e-003, 6.500922e-003, 1.605601e-002, 1.418937e-002, 1.457300e-002, 1.072368e-002, 8.552836e-003, 9.585710e-003, -2.689346e-003, -2.161466e-002, -1.926911e-002, -1.756344e-002, -2.918183e-002, -5.770618e-003, 1.266346e-002, 2.879641e-003, -9.218273e-003, -1.443090e-002, -2.222349e-003, -8.046773e-003, 4.866694e-003, -1.026152e-002, -2.353239e-002, -1.516024e-002, -8.458940e-003, 3.354207e-003, -7.366413e-003, -2.536650e-002, -2.944988e-002, -2.675247e-002, 9.406744e-003, 3.296785e-002, -1.484670e-002, -1.465063e-002, 1.867919e-002, 2.239400e-002, 1.498135e-002, 1.305571e-002, 1.201471e-002, 1.164787e-002, 1.311988e-003, -1.255799e-002, -1.912930e-002, -2.304593e-002, -1.792672e-002, -1.667647e-002, -9.116723e-003, -1.379180e-003, 7.840405e-003, 7.441497e-003, 5.308003e-004, -1.779038e-003, 9.250610e-003, 2.102049e-002, 1.091182e-003, -8.560287e-003, 9.843632e-003, 9.720542e-003, -1.216663e-002, -3.875833e-003, 1.069644e-002, 1.552883e-002, 4.732054e-004, -1.503460e-002, -8.427758e-003, 2.566125e-004, 2.833440e-002, -4.496521e-003, -2.088988e-002, -1.499201e-002, -5.025906e-004,


© ISO/IEC 2004 — All rights reserved

Copyright International Organization for Standardization
Provided by IHS under license with ISO
No reproduction or networking permitted without license from IHS
Not for Resale

5.224819e-003, -1.682346e-002, -3.511889e-002, -1.483404e-002, -8.951364e-003, 1.060702e-002, 2.686511e-002, -1.251588e-002, -3.384228e-002, -1.566866e-003, 1.554506e-002, 9.697515e-003, 6.164234e-003, 1.455463e-002, 1.353528e-002, 6.945271e-003, -3.005119e-004, -8.561902e-003, -1.523447e-002, -1.501080e-002, -1.505039e-002, -1.106360e-002, -1.052439e-002, -5.950509e-003, -8.825693e-004, -2.896942e-003, -5.247402e-004, 1.366692e-002, 2.268327e-002, 5.723754e-003, 3.862103e-003, 2.225361e-002, 2.459568e-002, 1.008084e-002, 1.865435e-003, 1.304721e-002, 1.588258e-002, -9.968212e-004, 4.639489e-004, 2.828698e-003, 3.728901e-003, 3.462838e-002, 1.715969e-002, 4.437124e-003, -2.181774e-003, 5.156156e-003, 4.455069e-003, -6.227174e-003, -1.958376e-003, 2.655956e-002, 2.745724e-002, 4.407660e-003, 2.804261e-002, 4.753272e-003, -2.158035e-002, 8.327031e-004, 2.069953e-002, 2.043087e-002, 4.503029e-003, 6.068046e-003, 1.240888e-002, 1.182812e-002, 1.295828e-002, 1.114312e-002, 8.986826e-003, 2.027136e-003, -4.882952e-003, -8.159307e-003, -4.544999e-003, -5.708036e-004, 3.048341e-003, 5.356521e-003, 8.013017e-003, 1.068333e-002, 1.342139e-002, 9.902623e-003, -5.553138e-003, 4.590796e-003, 1.662796e-002, 1.605687e-002, -7.153591e-003, 3.985257e-003, 2.037962e-004, -4.243794e-003, -7.642027e-004, 1.195146e-003, -2.248112e-003, 1.649266e-002, 2.954206e-002, 4.834146e-003, -1.903587e-002, -1.516516e-002, -2.600781e-004, 9.113960e-003, 2.038524e-002, 2.209932e-002, 2.383262e-003, -2.874273e-002, 1.006104e-002, 1.248135e-002, -9.408643e-003, 8.164975e-004, 1.014662e-002, 6.625191e-003, -1.315471e-002, -1.389098e-002, -2.096509e-003, 1.039204e-003, 6.761257e-003, 8.417272e-003, 5.675221e-003, -3.314332e-003, -9.439217e-003, -8.601488e-003, 1.545420e-003, 7.741644e-003, 8.205314e-003, 7.380264e-003, 5.691192e-003, -1.382062e-004, 5.551321e-003, 3.951350e-003, -9.696055e-003, -1.037840e-002, -4.856314e-004, -6.650518e-003, -1.805660e-002, -1.067676e-002, -7.680646e-003, -1.086197e-002, -2.720653e-003, 1.198093e-004, -1.051637e-002, -6.338127e-003, 1.464910e-002, -1.489054e-002, -4.145568e-002, -2.371984e-002, 5.716342e-003, 1.643848e-002, -3.970966e-003, -2.411483e-002, -1.544411e-002, -3.215863e-002, 2.301510e-003, 1.609207e-002, -5.684617e-004, -8.365357e-003, -7.756923e-003, -6.626311e-003, -2.077780e-002, -3.294796e-002, -2.640720e-002, -1.464260e-002, -1.007223e-002, -8.339519e-003, -5.053866e-003, -4.213262e-003, -4.548021e-003, -2.121127e-003, 2.117650e-003, 1.461115e-003, -2.251675e-003, -6.419210e-003, -1.850513e-002, -2.055377e-002, -1.856599e-003, 1.355801e-004, -1.823381e-002, -2.592572e-002, -1.715679e-002, -3.053452e-002, -3.412765e-002, -1.865416e-002, -1.042915e-002, -7.975438e-003, 2.317962e-003, -1.291467e-003, -1.790296e-002, -1.938258e-002, -1.271523e-003, -1.865712e-002, -1.408225e-002, 5.888041e-003, 9.463395e-003, 3.165410e-003, -1.911228e-002, -1.658515e-002, 2.029676e-002, 5.367125e-003, -5.178345e-003, 9.318177e-003, 1.827743e-003, -6.486528e-003, -8.193208e-003, 3.081605e-003, 3.016336e-003, -4.436570e-003, -1.320857e-002, -1.001011e-002, -6.502364e-003, -3.872382e-003, 1.389480e-003, 8.454549e-003, 9.496395e-003, 1.156362e-002, 1.051908e-002, 6.300904e-003, -3.870833e-003, -1.824450e-002, -1.926869e-002, -3.380426e-003, 2.623704e-002, 2.566664e-002, 2.009916e-003, -3.778941e-003, 2.051598e-002, 1.241938e-002, 1.082695e-002, 1.339598e-002, 1.099380e-002, 3.341698e-002, 5.333446e-002, 4.228288e-002, 4.268121e-003, -5.526527e-003, 8.264100e-003, 6.103497e-003, 1.045614e-002, 1.506283e-002, 1.577461e-002, 1.317641e-002, -5.284962e-003, -2.478335e-003, 2.487401e-002, 1.298996e-002, -1.631287e-002, -1.553210e-002, -1.361889e-002, -2.187306e-002, -1.991344e-002, -4.934095e-003, 4.933835e-003, 2.507623e-003, -7.261815e-003, -1.022785e-002, -5.611897e-003, 1.990953e-003, 5.416338e-003, 9.546660e-003, 9.830118e-003, 1.328103e-002, 9.466336e-003, -8.459503e-004, -1.580310e-002, -2.755431e-002, -1.448004e-002, 5.989443e-003, 2.156817e-002, -1.121101e-002, -3.287835e-002, -2.969554e-002, 9.067295e-004, -8.479156e-003, -3.988921e-003, -1.923343e-003, -2.232228e-002, -1.205887e-002, 1.521288e-002, 3.769316e-002, 1.575260e-002, 4.548484e-003},
{-4.003404e-003, 1.101775e-002, 1.028313e-002, 1.932263e-002, 1.684374e-002, -7.871162e-003, -1.960375e-002, -2.531917e-003, 2.101093e-002, 2.134544e-002, 2.536171e-003, 7.647877e-003, 1.730718e-002, 1.693705e-002, -9.954031e-003, -3.520307e-002, -4.014449e-002, -2.856757e-002, -1.344490e-002, 7.787775e-003, 2.182717e-002, 2.835680e-002, 3.034775e-002, 2.388602e-002, 1.815871e-002, 1.411156e-002, 3.529309e-003, -8.462660e-003, -1.820982e-002, -2.405971e-002, -1.772615e-002, -8.802762e-003, 1.893330e-003, 6.101630e-003, 3.796688e-003, -4.058433e-004, 2.744687e-003, -5.163358e-004, -4.536456e-003, -6.337967e-003, -9.780289e-003, 7.779317e-004, 2.099669e-002, 3.030283e-002, 1.536256e-002, 5.417453e-004, -1.993196e-002, 8.684949e-003, 8.767738e-003, 1.832785e-002, 1.000446e-002, -2.457479e-002, -2.547276e-002, 4.474929e-003, 8.649358e-003, -8.364122e-003, -6.047257e-003, 1.831518e-002, 2.693662e-002, 8.291496e-003, -1.229077e-002, -1.548829e-002, -7.395329e-003, 7.800835e-003, 1.370790e-002, 1.874462e-002, 1.774863e-002, 1.521420e-002, 8.542174e-003, -1.426858e-003, -1.246454e-002, -1.779872e-002, -2.122521e-002, -2.294687e-002, -2.580498e-002, -3.366067e-002, -3.468668e-002, -2.339548e-002, -3.811572e-003, 1.406647e-002, 2.151170e-002, 1.872211e-002, 1.534216e-002, 1.313756e-002, 2.893552e-003, -5.833543e-003, -1.395611e-002, -5.272012e-003, 1.715765e-002, 2.830928e-002, 1.253309e-002, -1.499636e-003, -1.491977e-002, 1.577407e-002, 7.556075e-003, 1.092153e-002, -8.667800e-003, -3.513533e-002, -1.186201e-002, 3.785351e-003, -1.647551e-002, -1.683949e-002, 3.233138e-003, 7.714650e-003, -9.276978e-004, -1.533752e-002, -1.174166e-002, -7.999524e-003, -4.396232e-004, -1.658234e-003, -9.226468e-003, -8.172922e-003,

© ISO/IEC 2004 — All rights reserved


Copyright International Organization for Standardization
Provided by IHS under license with ISO
No reproduction or networking permitted without license from IHS
Not for Resale

5.668106e-004, 7.295545e-003, 5.783434e-003, 4.063357e-004, -1.048138e-002, -2.177951e-002, -3.008865e-002, -3.035332e-002, -2.190972e-002, -1.473089e-002, -1.687003e-002, -2.323073e-002, -1.476491e-002, 1.273366e-003, 8.890865e-003, -7.598422e-005, -1.189476e-002, -1.565732e-002, -1.264691e-002, -4.965486e-003, -2.018379e-002, -2.581141e-002, 8.356641e-004, 2.645398e-002, 9.682531e-003, -7.513487e-003, -1.074595e-002, 1.135682e-002, 2.719523e-004, 7.787674e-003, -1.796179e-002, -2.434470e-002, -1.771131e-003, 2.748412e-004, -7.453673e-003, 8.173074e-003, 2.200959e-002, 7.910110e-003, -1.002905e-002, -7.391099e-003, 2.801667e-003, -8.608487e-004, -7.119816e-003, -9.377609e-003, -6.656263e-003, 4.179364e-003, 2.097009e-002, 3.410889e-002, 4.225613e-002, 3.707059e-002, 2.963824e-002, 9.383317e-003, -9.926051e-003, -2.108443e-002, -2.176700e-002, -1.057357e-002, 5.205395e-003, 1.041360e-002, 8.497974e-003, 7.029174e-003, 1.210669e-002, 1.147075e-002, -1.087682e-002, -2.119257e-002, -2.089680e-002, 1.792877e-003, -5.367998e-003, -2.644353e-002, -1.034499e-002, 1.926080e-002, 5.209095e-003, -1.719008e-002, -1.820544e-002, 1.830814e-003, 7.571922e-005, 9.251680e-003, -1.335875e-002, -6.427803e-003, 9.139323e-003, 1.794641e-002, 1.483929e-002, 2.642325e-002, 2.104987e-002, -2.723840e-003, -7.151486e-003, -2.957937e-003, -8.272338e-003, -1.876231e-002, -2.429832e-002, -2.229169e-002, -1.151094e-002, 2.361730e-003, 2.110463e-002, 4.041027e-002, 5.677175e-002, 5.670807e-002, 4.304224e-002, 1.809549e-002, -6.851692e-003, -2.289872e-002, -2.921017e-002, -3.192105e-002, -2.266897e-002, -5.644036e-003, 9.151739e-003, 1.939239e-002, 1.368037e-002, 1.278761e-002, 3.580909e-003, -1.593590e-002, -1.503055e-002, 1.655793e-003, 7.730990e-003, -1.495464e-002, -6.009719e-003, 1.437732e-002, 3.061945e-003, -1.834655e-002, -1.439871e-002, -4.232960e-006, 3.463468e-003, 9.001131e-003, -9.344608e-003, 9.351211e-003, 1.179572e-002, 6.323825e-003, 7.681881e-003, 7.604694e-003, -7.983620e-003, -1.652582e-002, -7.334016e-003, -1.216878e-002, -2.758829e-002, -3.811263e-002, -3.984687e-002, -3.710311e-002, -3.531227e-002, -2.469204e-002, -7.376199e-003, 1.197037e-002, 3.432588e-002, 4.155176e-002, 2.750515e-002, 2.983610e-003, -1.956122e-002, -3.537616e-002, -4.703918e-002, -4.908820e-002, -4.328985e-002, -2.862299e-002, -9.475990e-003, 6.233243e-003, 1.874896e-002, 1.285353e-002, 6.198349e-003, -6.540569e-003, -6.294918e-003, 7.981408e-003, 1.368952e-002, -6.913157e-003, -2.697552e-003, 2.156253e-002, 1.996416e-003, -1.610124e-002, -1.261619e-002, 2.552959e-003, 5.690997e-003, 4.121079e-003, -9.940668e-003, 1.299555e-002, 1.191243e-002, 3.124998e-003, 3.115848e-003, 2.547835e-003, -1.047882e-002, 7.669966e-004, 1.619726e-002, 8.222424e-003, -7.593850e-003, -1.667972e-002, -1.878970e-002, -2.486563e-002, -3.462783e-002, -3.879612e-002, -2.898787e-002, -1.350085e-002, 1.114554e-002, 2.834141e-002, 2.570009e-002, 1.596534e-002, 7.435217e-003, -8.995746e-003, -2.819314e-002, -3.964810e-002, -3.934446e-002, -2.960325e-002, -1.244576e-002, 4.388586e-003, 1.032308e-002, 1.964094e-002, 1.322690e-002, -9.979269e-003, -9.572345e-003, 1.246531e-002, 2.974261e-002, -3.716918e-003, -5.679958e-003, 3.118674e-002, 6.707249e-003, -1.303732e-002, -1.199976e-002, 8.163958e-004, -9.631414e-004, -3.146983e-003, -3.812326e-003, 1.848669e-002, 4.432103e-003, -5.236761e-003, 2.640941e-003, -2.463445e-003, 2.485212e-003, 2.872533e-002, 4.285833e-002, 3.480290e-002, 2.676531e-002, 1.969255e-002, 6.667739e-003, -1.722055e-002, -4.273499e-002, -6.183049e-002, -6.106896e-002, -3.913579e-002, -1.273862e-002, 1.308165e-002, 2.831624e-002, 3.746004e-002, 3.863702e-002, 2.922382e-002, 5.859417e-003, -1.537907e-002, -1.866872e-002, -1.287455e-002, -6.072113e-004, 9.787805e-003, 5.388466e-003, 5.791694e-003, 1.900415e-002, 3.010911e-004, -2.218984e-002, 6.718268e-003, 4.433010e-002, 1.281435e-002, -1.418500e-002, 2.919728e-002, 1.080858e-002, -6.201127e-003, -6.276222e-003, 1.145831e-003, -2.060144e-003, 8.052819e-004, 1.165441e-003, 2.139664e-002, -3.264976e-003, -3.946440e-003, 2.593175e-003, -9.040027e-004, 1.480334e-002, 4.500132e-002, 5.317654e-002, 4.915342e-002, 4.299774e-002, 3.413280e-002, 7.265571e-003, -2.253887e-002, -4.779859e-002, -6.592670e-002, -6.283789e-002, -4.122416e-002, -1.257803e-002, 1.741531e-002, 3.734002e-002, 5.048911e-002, 6.082046e-002, 5.160681e-002, 2.649136e-002, 3.138478e-003, -7.073296e-003, -4.555318e-003, 6.798795e-003, 2.199420e-002, 8.223836e-003, -4.545757e-003, 4.852865e-003, 1.455114e-002, -1.609145e-002, -6.155727e-003, 4.645389e-002, 2.777449e-002, -1.564673e-002, 1.097359e-002, 1.613660e-002, 3.390581e-004, 5.491989e-004, 2.143965e-003, 2.426369e-005, 6.563150e-003, 4.910188e-003, 1.636220e-002, -5.743719e-003, -4.291212e-003, -8.175247e-004, -6.502711e-003, 1.704404e-002, 3.903163e-002, 4.134712e-002, 3.865649e-002, 3.054920e-002, 2.206405e-002, 3.773923e-003, -1.705575e-002, -3.353778e-002, -4.136685e-002, -3.406161e-002, -1.122339e-002, 1.096492e-002, 3.167604e-002, 4.414317e-002, 5.138472e-002, 6.032433e-002, 5.406671e-002, 2.757219e-002, -1.272434e-003, -1.492494e-002, -1.120630e-002, 4.457703e-003, 2.713249e-002, 2.109538e-002, 5.928347e-004, -1.087465e-002, 9.813554e-003, 6.157840e-003, -1.034454e-002, 3.243503e-002, 3.436574e-002, -1.561119e-002, -3.869064e-003, 3.762015e-002, 7.205948e-003, 1.356517e-004, -2.022251e-002, -7.513034e-003, 1.417137e-003, -9.223067e-004, 1.562630e-002, 1.059761e-003, -9.252119e-004, -5.426924e-003, -8.670577e-003, 4.891292e-003, 1.858802e-002, 2.238513e-002, 2.083115e-002, 1.011819e-002, 4.085437e-003, 1.807883e-003, -7.175478e-003, -1.609679e-002, -1.932728e-002, -9.290526e-003, 1.182232e-002, 2.311853e-002, 2.841563e-002, 2.894435e-002, 3.177238e-002, 4.141234e-002, 3.764056e-002, 1.474662e-002, -1.810360e-002, -3.811241e-002, -3.920125e-002, -2.018848e-002, 1.101201e-002, 2.834577e-002, 1.465410e-002, -


© ISO/IEC 2004 — All rights reserved

Copyright International Organization for Standardization
Provided by IHS under license with ISO
No reproduction or networking permitted without license from IHS
Not for Resale

9.989315e-003, 5.043123e-003, 2.140808e-002, -2.318633e-003, 1.644690e-002, 3.110859e-002, -6.119270e-003, -1.752342e-002, 2.204450e-002, 5.064979e-003, -2.150157e-003, -2.508889e-002, -8.965173e-003, -3.392381e-003, -6.383629e-003, 1.462758e-002, 4.549684e-003, 6.492024e-003, -8.414085e-003, -9.776215e-003, -1.116251e-002, 4.171156e-003, 7.619383e-003, 6.075530e-003, 1.952520e-003, 3.412694e-003, 5.285949e-003, 7.562096e-003, 4.663203e-003, -4.042863e-003, 4.611900e-003, 1.498220e-002, 1.187311e-002, 7.571255e-003, -3.873605e-004, 5.843304e-005, 9.616841e-003, 1.202324e-002, -1.360134e-003, -2.924421e-002, -5.424234e-002, -6.584426e-002, -4.995750e-002, -1.300948e-002, 2.278054e-002, 2.662213e-002, 8.016484e-003, 5.514006e-003, 2.518108e-002, 3.241814e-003, 2.217468e-003, 1.896436e-002, -6.072727e-003, -2.665084e-002, 6.023024e-003, -1.421130e-004, -1.474119e-003, -3.265138e-002, -1.066210e-002, -3.135992e-002, -1.327843e-002, 1.335269e-002, 1.107363e-002, 8.837142e-003, -4.586819e-003, -1.216951e-002, -1.639518e-002, -4.565247e-004, 6.437701e-003, 6.971962e-003, 7.146418e-003, 1.162847e-002, 1.297970e-002, 2.234955e-002, 2.407968e-002, 1.436568e-002, 2.022037e-002, 1.790177e-002, 4.104743e-003, -1.014426e-002, -2.367530e-002, -2.696524e-002, -1.942834e-002, -1.091920e-002, -1.310778e-002, -3.008525e-002, -5.501391e-002, -7.018011e-002, -6.549070e-002, -3.552205e-002, 9.887358e-003, 3.325508e-002, 2.342649e-002, 1.302299e-002, 2.312723e-002, 1.132335e-002, -1.194062e-002, 1.001165e-002, -9.602331e-003, -3.022531e-002, -3.044595e-003, -9.381639e-003, 1.003377e-003, -4.045909e-002, -9.594903e-003, -3.771312e-002, -1.939907e-002, 1.284478e-002, 1.325647e-002, 8.096914e-003, -4.384922e-003, -1.547060e-002, -1.572849e-002, 3.218193e-004, 9.084229e-003, 1.112835e-002, 1.526779e-002, 1.843756e-002, 2.226669e-002, 3.114130e-002, 3.425296e-002, 3.164235e-002, 2.792615e-002, 1.796973e-002, 9.517409e-004, -2.039832e-002, -3.807751e-002, -4.034086e-002, -3.349896e-002, -2.571875e-002, -1.598703e-002, -1.958719e-002, -3.831163e-002, -5.349616e-002, -5.654448e-002, -4.126680e-002, 1.377123e-003, 3.145270e-002, 2.816740e-002, 1.478798e-002, 1.812340e-002, 2.264657e-002, -2.265191e-003, 1.169157e-002, -3.772143e-003, -2.974628e-002, -3.903784e-003, -1.283157e-002, 3.996221e-003, -3.700899e-002, -6.632738e-003, -2.818592e-002, -9.588143e-003, 1.430378e-002, 5.935273e-003, -8.541779e-004, -5.479015e-003, -1.313698e-002, -1.653131e-002, 3.827635e-003, 8.424445e-003, 1.571335e-002, 1.471595e-002, 1.754300e-002, 2.295205e-002, 2.885067e-002, 3.047034e-002, 3.353700e-002, 2.398067e-002, 1.050980e-002, -8.740366e-004, -2.204315e-002, -3.611290e-002, -3.405246e-002, -2.595548e-002, -1.539920e-002, -3.293604e-003, -4.039829e-003, -1.476433e-002, -2.738821e-002, -3.943922e-002, -3.237517e-002, -1.625101e-003, 2.866675e-002, 2.564041e-002, 9.542920e-003, 8.136263e-003, 1.515771e-002, 1.032475e-002, 1.682281e-002, 2.308057e-003, -1.795475e-002, -2.482781e-003, -9.161806e-003, 1.713222e-002, -2.688165e-002, 4.537028e-004, -1.437628e-002, 6.496552e-003, 1.664155e-002, -2.177877e-003, -1.272299e-002, -7.365627e-003, -8.301594e-003, -1.524264e-002, -6.074779e-003, -2.086138e-003, 8.265514e-003, 6.152083e-003, 4.263335e-003, 1.047913e-002, 1.598173e-002, 2.155980e-002, 2.629822e-002, 2.034759e-002, 1.077410e-002, 1.595074e-003, -1.491811e-002, -2.144195e-002, -1.539636e-002, -3.610869e-003, 6.693982e-003, 1.645374e-002, 1.534272e-002, 1.009489e-002, -2.401088e-003, -2.043640e-002, -2.708608e-002, -7.418253e-003, 2.023994e-002, 2.168542e-002, -8.557138e-004, -1.049038e-002, 2.459547e-003, 2.082298e-002, 1.782002e-002, 2.577457e-003, -1.062652e-002, -1.655650e-003, -6.279603e-003, 3.099777e-002, -1.666710e-002, 1.760211e-002, 9.050451e-004, 2.069692e-002, 1.725121e-002, -1.431904e-002, -2.127222e-002, -6.984115e-003, -4.366036e-003, -1.475121e-002, -2.338139e-002, -1.952068e-002, -1.329022e-002, -1.697934e-002, -2.181573e-002, -1.771767e-002, -6.549540e-003, 7.933505e-003, 2.042290e-002, 2.169562e-002, 1.156948e-002, -7.665512e-004, -8.770331e-003, -1.273530e-002, -4.182940e-003, 1.225977e-002, 2.381877e-002, 3.018890e-002, 3.407088e-002, 3.005129e-002, 2.259945e-002, 5.205140e-003, -1.282374e-002, -1.107765e-002, 4.682527e-003, 1.307629e-002, -8.241325e-003, -3.302083e-002, -1.889186e-002, 1.477329e-002, 1.612595e-002, -2.489360e-003, -3.162663e-003, 1.577696e-003, -7.661618e-003, 3.681756e-002, -8.271868e-003, 3.031537e-002, 1.477588e-002, 3.084365e-002, 1.567841e-002, -2.446824e-002, -2.398587e-002, -1.356522e-003, 6.332120e-004, -2.189427e-002, -3.765032e-002, -2.906832e-002, -1.928689e-002, -2.582947e-002, -3.580129e-002, -4.002706e-002, -3.264549e-002, -1.040624e-002, 1.209810e-002, 2.072331e-002, 1.501293e-002, 2.397165e-003, -6.422937e-003, -8.310133e-003, -1.355237e-003, 1.769679e-002, 3.439832e-002, 4.097009e-002, 4.827812e-002, 4.965709e-002, 4.935557e-002, 3.576372e-002, 1.423305e-002, -5.972408e-003, -1.252563e-002, -6.268140e-003, -1.476934e-002, -4.770982e-002, -3.970704e-002, -5.045174e-003, 9.939700e-003, -9.916984e-003, -7.338140e-003, 5.429704e-003, -1.046838e-002, 4.332895e-002, 2.048120e-003, 3.353104e-002, 1.871708e-002, 3.319192e-002, 1.776856e-002, -2.345183e-002, -2.212099e-002, 7.491091e-003, 2.567386e-003, -3.268413e-002, -3.969261e-002, -1.406190e-002, 3.281122e-003, 2.976502e-004, -1.292892e-002, -1.994701e-002, -2.136824e-002, -1.135235e-002, 4.637979e-003, 2.167924e-002, 2.162865e-002, 9.188269e-003, -2.970106e-003, -4.969049e-003, 1.560349e-003, 1.778796e-002, 2.543110e-002, 2.531559e-002, 2.846860e-002, 3.738310e-002, 4.517701e-002, 3.365511e-002, 1.176426e-002, -8.015917e-003, -2.227850e-002, -2.174487e-002, -1.747866e-002, -4.979218e-002, -5.450808e-002, -1.972598e-002, -2.223109e-003, -2.376516e-002, -1.544791e-002, 7.486391e-003, -1.049799e-002, 4.789397e-002, 1.444253e-002, 2.973727e-002, 1.631949e-002, 2.137135e-002, 1.333613e-002, -

© ISO/IEC 2004 — All rights reserved


Copyright International Organization for Standardization
Provided by IHS under license with ISO
No reproduction or networking permitted without license from IHS
Not for Resale

1.531552e-002, -1.251661e-002, 1.066242e-002, 3.237819e-003, -3.936219e-002, -3.600037e-002, -2.110096e-002, -1.649796e-002, -2.614987e-002, -3.201383e-002, -2.556189e-002, -8.934084e-003, -3.192760e-004, 1.485619e-002, 3.065995e-002, 3.154379e-002, 1.956975e-002, 7.801290e-003, 8.594099e-004, 4.008066e-003, 5.774007e-003, 3.211094e-003, -6.659162e-003, -2.065643e-002, -2.602871e-002, -2.106539e-002, -2.250780e-002, -2.947153e-002, -3.463350e-002, -3.424298e-002, -3.245192e-002, -1.086453e-002, -3.507317e-002, -5.117230e-002, -2.688663e-002, -9.745497e-003, -3.887555e-002, -2.005389e-002, -1.293850e-003, -1.022882e-002, 4.457597e-002, 2.201347e-002, 1.443585e-002, -5.291999e-003, -6.215412e-003, 3.152443e-003, -2.803077e-003, 4.742111e-004, 8.238031e-003, 2.801727e-003, -3.294924e-002, -5.949106e-003, 1.816660e-002, 2.236454e-002, 2.858810e-003, -2.851329e-002, -4.483779e-002, -3.131202e-002, -3.938154e-003, 2.457520e-002, 4.410242e-002, 3.387712e-002, 1.524193e-002, 4.704566e-003, 1.221656e-003, 4.245301e-003, 6.805895e-003, 5.795718e-003, -7.903573e-003, -1.875536e-002, -1.359794e-002, -3.405212e-003, 1.362507e-002, 1.802556e-002, -1.346940e-003, -2.746986e-002, -3.114854e-002, 5.061924e-003, 1.946772e-003, -2.886579e-002, -2.072523e-002, -1.742383e-002, -3.593868e-002, -1.623975e-002, -3.949596e-003, -8.564358e-003, 3.704616e-003, 1.583620e-002, -1.135452e-004, -1.447941e-002, -2.806909e-002, -6.974500e-003, 6.192756e-003, 3.455066e-003, 3.018998e-003, 5.905944e-003, 8.443611e-003, 3.820082e-002, 6.101888e-002, 6.988149e-002, 4.337021e-002, -3.909349e-003, -5.060156e-002, -6.664221e-002, -4.654165e-002, -1.384902e-002, 1.504573e-002, 1.802792e-003, -1.451758e-002, -1.283704e-002, -1.113954e-002, -1.214411e-002, -1.900959e-002, -2.961140e-002, -4.550843e-002, -4.328848e-002, -1.677973e-002, 1.347144e-002, 4.446891e-002, 6.119745e-002, 4.943481e-002, 1.645925e-002, -1.101862e-002, 1.396414e-002, 3.759514e-002, -9.702425e-005, -5.982331e-003, -9.257916e-003, -2.527948e-002, -3.582452e-003, -6.205276e-003, -5.780652e-003, -7.620817e-003, 3.131354e-003, -1.730964e-002, -3.009688e-002, -4.161003e-002, -2.487101e-002, -1.114608e-003, 8.357158e-003, 8.040889e-003, 3.574335e-002, 4.547457e-002, 3.613028e-002, 5.152244e-002, 6.737018e-002, 3.058052e-002, -8.660847e-003, -2.581892e-002, -2.465426e-002, -3.709877e-002, -2.850329e-002, -1.291554e-002, -2.620432e-002, -3.223017e-002, -2.447402e-002, -1.768277e-002, -2.364037e-002, -3.677215e-002, -4.838605e-002, -3.766716e-002, -2.131574e-002, -1.833830e-002, -9.462794e-003, 2.314658e-002, 4.142163e-002, 4.005808e-002, 2.187294e-002, 1.283228e-002, 3.939440e-002, 7.814916e-002, 3.579975e-002, 1.948751e-002, 1.171815e-002, 1.787834e-005, 8.996902e-003, 1.271278e-002, 2.053753e-002, -2.226976e-002, 1.289650e-003, -7.409855e-003, -1.101511e-002, -1.881869e-002, -2.335767e-002, -4.958197e-003, 4.529061e-003, 7.893430e-003, 4.495748e-002, 4.978468e-002, 3.079710e-002, 3.654977e-002, 8.361186e-002, 3.043572e-002, -1.340816e-003, 7.274609e-003, 6.172215e-002, 3.000293e-002, 1.435831e-002, 6.505535e-003, -1.926932e-002, -1.211513e-002, -4.601049e-003, -4.541250e-003, -4.019233e-004, -1.008452e-002, -1.099553e-002, 4.156233e-002, 7.202928e-002, 3.525147e-002, 9.409647e-003, 2.596377e-002, 4.001357e-002, 2.000783e-002, 4.967870e-003, 1.033015e-003, 2.562475e-002, 7.238421e-002, 4.661114e-002, 2.591828e-002, 2.126152e-002, 1.762236e-002, 1.881805e-002, 2.504531e-002, 2.794695e-002, -6.781697e-003, 5.131985e-003, 1.833904e-002, 2.991734e-002, 2.133415e-002, -8.846674e-003, -4.561071e-003, 1.284713e-002, 1.158974e-002, 2.938387e-002, 3.011508e-002, 1.820672e-003, 3.976907e-003, 5.871440e-002, 1.453026e-002, -3.087268e-002, 5.509683e-003, 4.948794e-002, 4.451725e-002, 3.048120e-002, 1.801022e-002, -4.368374e-003, 4.434832e-003, 1.366530e-002, 8.678336e-003, 1.870841e-002, 2.036816e-002, 6.547333e-003, 5.059009e-002, 7.132126e-002, 1.170470e-002, -1.542515e-002, 1.867535e-002, 1.245793e-003, -1.029443e-002, -1.056003e-002, -4.363171e-003, 1.894622e-003, 3.169491e-002, 2.107358e-002, 2.184078e-002, 2.938834e-002, 1.577308e-002, 1.735649e-002, 2.958992e-002, 3.244880e-002, -1.261962e-002, -4.751311e-003, 1.741575e-002, 2.897612e-002, 3.794310e-002, 7.797370e-003, -3.130491e-003, 1.348718e-002, 2.096739e-002, 2.137694e-002, 1.299338e-002, -9.772331e-003, -1.276888e-002, -3.491956e-003, -1.492024e-002, -2.900928e-002, -8.835206e-003, -5.058439e-004, 2.339553e-003, 2.186212e-002, 2.125592e-002, 3.986693e-003, 4.656729e-003, 1.624885e-002, 1.089938e-002, 1.787065e-002, 3.049720e-002, 1.637903e-002, 2.451870e-002, 2.642863e-002, 1.806803e-003, -2.728097e-002, -3.305213e-002, -3.981474e-002, -1.650694e-002, 2.379901e-003, 1.603447e-003, -1.286292e-002, -7.224095e-003, -1.433191e-003, -4.716842e-003, 2.111174e-002, 7.558198e-003, 1.248893e-002, 2.813986e-002, 3.047566e-002, -2.378544e-002, -1.449085e-002, 4.394674e-003, 8.916456e-003, 2.509514e-002, 3.312901e-003, -8.948436e-003, 1.246592e-002, 1.382195e-002, 4.397996e-003, 1.052988e-002, -7.629216e-003, -2.531273e-002, -3.437667e-002, -3.826698e-002, -4.308436e-002, -3.906396e-002, -2.815253e-002, -1.138477e-002, 8.607793e-003, 1.234191e-002, -1.214607e-002, -6.759419e-003, 8.949864e-003, 7.084526e-003, 3.854187e-003, 1.979109e-002, 2.168206e-002, 7.624396e-003, -1.214769e-003, -1.400320e-002, -3.469650e-002, -4.131118e-002, -2.955949e-002, 3.528537e-003, 2.028145e-002, 1.199608e-002, -1.734038e-002, -1.817677e-002, 1.446892e-003, -1.249215e-002, 1.031530e-002, 8.234278e-003, 1.639578e-002, 2.340696e-002, 1.710509e-002, -3.190459e-002, -2.453514e-002, -1.642251e-002, -2.217043e-002, -1.164642e-004, -1.118752e-002, -1.015817e-002, 1.154370e-002, 5.606841e-003, -6.686725e-003, -1.897766e-003, -7.303188e-003, -3.037935e-002, -4.435808e-002, -4.516816e-002, -4.036758e-002, -2.816196e-002, -9.833366e-003, 1.383133e-002, 1.553652e-002, -1.180483e-002, -3.947107e-002, -


© ISO/IEC 2004 — All rights reserved

Copyright International Organization for Standardization
Provided by IHS under license with ISO
No reproduction or networking permitted without license from IHS
Not for Resale

2.580856e-002, -7.946724e-003, -1.805686e-002, -2.047269e-002, -5.276252e-003, 2.304313e-002, 2.580370e-002, 1.526315e-002, -4.705079e-003, -2.036659e-002, -2.472785e-002, -1.176000e-002, 1.779363e-002, 3.922385e-002, 1.786806e-002, -2.213045e-002, -2.671361e-002, -3.461147e-003, -2.178072e-002, -4.492145e-003, -3.023637e-003, 1.395636e-002, 1.021656e-002, 4.691799e-003, -3.202508e-002, -3.068586e-002, -2.509693e-002, -3.508253e-002, -2.092091e-002, -1.824826e-002, -1.033041e-002, 9.928546e-003, 4.527792e-004, -1.008139e-002, -9.952659e-003, -1.459848e-002, -2.136903e-002, -2.287933e-002, -2.362169e-002, -1.246658e-002, -8.482968e-004, 2.329787e-002, 2.867818e-002, -3.002324e-003, -4.776465e-002, -4.955181e-002, -2.242810e-002, -5.621834e-003, -2.028456e-002, -2.890333e-002, -2.728118e-002, -8.685224e-003, 1.911533e-002, 2.271286e-002, 1.229564e-002, -8.742732e-004, -2.510637e-003, 7.306628e-003, 2.795690e-002, 4.052649e-002, 1.137246e-002, -3.404993e-002, -2.246330e-002, 7.618034e-003, -1.125080e-002, -1.262223e-002, -1.539731e-002, 4.432795e-003, -4.979035e-003, 2.676808e-002, -2.849256e-002, -3.579306e-002, -2.668904e-002, -3.525141e-002, -2.386786e-002, -8.306201e-003, 1.972958e-003, 9.724986e-003, -6.173387e-003, -1.554078e-002, -1.577883e-002, -2.403068e-002, -3.262644e-002, -1.988506e-002, -1.745597e-002, -3.986716e-003, 8.404310e-003, 2.060897e-002, 1.324660e-002, -2.782925e-002, -4.526266e-002, -2.144390e-002, 7.720141e-003, 1.834421e-002, 7.695921e-003, -6.920567e-003, -2.431351e-002, -3.568767e-002, -2.166044e-002, -1.282844e-003, 6.462391e-003, 6.782747e-004, -1.346345e-003, 2.932022e-003, 2.009845e-002, 2.835611e-002, -8.578563e-004, -3.478071e-002, -1.079150e-002, 1.705085e-002, 8.193809e-004, -1.362742e-002, -2.850904e-002, -1.005912e-002, -1.757924e-002, 9.681771e-003, -1.705009e-002, -3.358656e-002, -2.152807e-002, -2.142843e-002, -8.372544e-003, -9.966289e-004, 3.772038e-003, 1.907918e-003, -5.122462e-003, -1.903553e-002, -1.749918e-002, -2.192962e-002, -3.224454e-002, -2.146110e-002, -1.130783e-002, 1.370475e-003, 1.238985e-002, 2.837923e-002, 1.017033e-002, -3.095514e-002, -3.723394e-003, 3.416171e-002, 5.399907e-002, 5.355562e-002, 4.496156e-002, 3.793210e-002, 1.476901e-002, -2.060977e-002, -3.038795e-002, -2.026387e-002, -1.028514e-002, -9.518108e-003, -7.147268e-003, 1.999040e-003, 1.683265e-002, 1.828965e-002, -4.520211e-003, -2.364201e-002, -1.392196e-004, 1.916442e-002, -1.641141e-003, -1.269828e-002, -2.417462e-002, -1.669624e-002, -2.208511e-002, 1.138082e-002, -2.047395e-002, -3.093115e-002, -1.498879e-002, -9.062008e-003, 5.850554e-003, 1.499758e-003, 2.379070e-004, -4.158777e-003, -7.667768e-003, -1.462667e-002, -1.228375e-002, -9.883093e-003, -1.536412e-002, -5.727333e-003, 4.369530e-003, 1.409515e-002, 2.072062e-002, 2.192932e-002, -9.390480e-004, -1.672636e-002, 1.066483e-002, 4.232518e-002, 5.234150e-002, 4.617989e-002, 3.115092e-002, 4.290726e-002, 4.863875e-002, 1.537005e-002, -8.010830e-003, -1.630220e-002, -1.120047e-002, -9.852914e-003, -8.186845e-003, -5.448545e-004, 1.688878e-002, 1.350171e-002, 1.111852e-003, -1.590074e-002, 1.494461e-004, 2.042689e-002, 6.616519e-004, -1.296140e-002, -1.330265e-002, -1.234873e-002, -1.974424e-002, 2.467761e-002, -2.882057e-002, -2.351943e-002, 4.883543e-003, 6.651755e-003, 3.903917e-003, -6.821090e-003, -3.520485e-003, 2.627295e-004, -5.846944e-003, -1.405751e-002, -9.401753e-003, -1.487171e-003, 2.803682e-004, 4.453983e-003, 1.303958e-002, 1.740717e-002, 1.131901e-002, 3.770248e-003, -1.249790e-002, -1.677355e-002, -1.100825e-002, 1.244132e-003, 7.490538e-003, -1.233540e-002, -4.133773e-002, -3.237578e-002, 2.103461e-002, 2.707304e-002, 2.049854e-003, -1.648551e-002, -1.493070e-002, -1.048925e-002, -6.319375e-003, 3.612487e-003, 1.618151e-002, 1.146297e-002, -2.541352e-003, -1.810711e-002, -1.002914e-002, -1.170813e-003, -4.011110e-003, -1.977329e-003, 3.119804e-003, -6.064414e-003, -1.587388e-002, 2.844103e-002, -2.705771e-002, -8.021422e-003, 2.521845e-002, 1.798370e-002, 6.764289e-003, -1.542758e-002, -3.098748e-003, 6.496237e-003, -6.696974e-004, -1.322266e-002, -1.049302e-002, 2.490427e-004, 4.985667e-003, 6.152837e-003, 9.036722e-003, 5.599453e-003, -8.518244e-003, -1.896595e-002, -1.006332e-002, 7.455844e-003, 1.651432e-002, 2.209215e-002, 6.161661e-003, -6.508852e-003, -2.091564e-002, -1.417918e-002, 1.339776e-002, 2.727021e-002, 5.502529e-003, -1.500422e-002, -2.150248e-002, -1.748056e-002, -1.013605e-002, 7.966564e-004, 1.049484e-002, 3.490347e-003, -8.072950e-003, -1.932261e-002, -1.294791e-002, -2.656408e-002, -1.271557e-002, 7.338853e-003, 1.838259e-002, 2.334352e-003, -7.123362e-003, 2.916875e-002, -2.334725e-002, 4.619055e-003, 3.565129e-002, 2.047648e-002, 9.446896e-003, -5.674707e-003, 9.265201e-003, 2.070428e-002, 1.101892e-002, -1.025180e-002, -1.089536e-002, 6.813456e-004, 5.710952e-003, 3.869734e-003, -8.338871e-004, -8.371976e-003, -2.506993e-002, -2.145966e-002, 6.431825e-003, 2.239063e-002, 2.815158e-002, 4.850173e-002, 3.319473e-002, 1.986146e-002, 1.568563e-002, 1.735060e-002, 1.770973e-002, 2.326855e-002, 5.014035e-003, -1.971705e-002, -2.917978e-002, -2.974057e-002, -1.920300e-002, -3.791570e-003, 3.676796e-003, -1.700314e-003, -8.202605e-003, -1.309699e-002, -1.203901e-002, -2.301732e-002, -9.819036e-003, 1.559287e-002, 2.593672e-002, 9.799692e-003, -1.140387e-002, 2.083245e-002, -1.002187e-002, 1.764932e-002, 3.767585e-002, 1.273136e-002, -1.155702e-004, -5.438914e-003, 2.177281e-003, 2.037352e-002, 1.743301e-002, -4.340777e-003, -1.094065e-002, -8.266018e-004, 6.642339e-003, 1.538397e-003, -9.306350e-003, -2.616127e-002, -3.252212e-002, -1.525644e-002, 4.959536e-003, 1.654788e-002, 2.644968e-002, 2.490381e-002, 9.083465e-003, -2.301652e-003, 3.570806e-003, 2.035769e-002, 2.038690e-002, 1.987500e-002, 6.430653e-003, -1.864468e-002, -3.308897e-002, -3.151465e-002, -2.399771e-002, -6.624040e-003, -3.333960e-003, -7.046892e-003, -7.779206e-003, -6.058507e-003,

© ISO/IEC 2004 — All rights reserved


Copyright International Organization for Standardization
Provided by IHS under license with ISO
No reproduction or networking permitted without license from IHS
Not for Resale

2.206438e-003, -1.595212e-002, -9.238613e-003, 3.897997e-003, 1.574302e-002, 3.628400e-003, -2.037642e-002, 1.214214e-002, -5.015368e-003, 2.049774e-002, 3.895427e-002, 1.350395e-002, -9.826983e-003, -7.188413e-003, 5.257818e-003, 6.846242e-003, 3.964979e-003, -1.650712e-003, -9.348776e-003, -3.068100e-003, 4.855189e-003, 3.355002e-004, -2.125606e-002, -3.743416e-002, -1.899433e-002, 3.406436e-003, 1.132531e-002, 1.194573e-002, 1.256619e-002, 2.219950e-003, -1.509839e-002, -1.510643e-002, -9.657648e-003, 4.925273e-003, 1.253688e-002, 1.591086e-002, 1.220581e-002, -2.039807e-003, -2.675961e-002, -3.024017e-002, -2.097976e-002, -5.454468e-003, -6.534535e-003, -6.822010e-003, -7.406075e-004, 7.782186e-003, 1.258825e-002, -1.063147e-002, -2.644097e-002, -1.619521e-002, 7.952683e-005, -1.481654e-002, -2.633389e-002, 5.381485e-003, -1.066906e-004, 2.042749e-002, 3.293389e-002, 8.866504e-003, -8.098240e-003, -4.117677e-003, 2.127811e-002, 1.647250e-002, -1.220827e-002, -5.791610e-003, -5.727126e-003, -2.030961e-005, 6.017440e-003, -9.365218e-005, -1.840520e-002, -2.615855e-002, -8.665006e-003, 1.054038e-002, 1.039528e-002, 4.315291e-003, 9.806864e-004, -1.553606e-002, -2.834215e-002, -1.734331e-002, -1.010383e-002, 2.608536e-004, 6.561632e-003, 9.089146e-003, 9.247873e-003, 5.414902e-003, -1.284941e-002, -1.987998e-002, -1.208743e-002, 1.468072e-003, -3.664275e-003, -6.625991e-003, 4.845631e-003, 1.842080e-002, 1.523763e-002, -2.941333e-003, -3.659121e-002, -2.867378e-002, -1.413735e-002, -2.050664e-002, -3.004228e-002, -1.975006e-004, 8.904383e-003, 4.140542e-002, 2.048371e-002, -5.122617e-003, -2.373475e-003, 5.272466e-004, 3.176816e-002, 2.712163e-002, -2.078539e-002, -1.241863e-002, -3.214762e-003, 3.163891e-004, 6.576023e-003, 2.238318e-003, -9.121456e-003, -1.482680e-002, -1.642304e-002, -1.454930e-002, -4.986329e-003, 4.923870e-003, 1.083113e-002, -2.742901e-003, -1.116029e-002, -9.744085e-003, -1.048715e-003, 6.671852e-003, 6.276359e-003, 2.741305e-003, 7.318681e-003, 1.300381e-002, 9.900252e-003, 3.877428e-003, 3.296332e-003, 7.185610e-003, -1.422071e-003, -1.800581e-003, 9.807808e-003, 2.770788e-002, 2.562589e-002, 1.013997e-002, -2.475134e-002, -2.122443e-002, -1.687111e-002, -1.506988e-002, -3.502390e-002, -5.424672e-003, 6.717483e-003, 3.280885e-002, -5.563327e-003, -1.702310e-002, 8.155675e-003, 1.920006e-002, 3.606514e-002, 4.086749e-002, -2.270344e-002, -1.865910e-002, -2.065879e-003, 4.264310e-003, 8.909008e-003, 4.038351e-003, -3.035904e-003, -2.108430e-002, -3.383100e-002, -1.168487e-002, 4.812243e-003, 1.560587e-002, 1.337420e-002, -4.308452e-003, -1.673288e-002, -1.628719e-002, -1.511556e-002, -4.695557e-003, 2.834068e-003, 3.909276e-003, 2.059022e-003, -1.891061e-003, 5.197195e-003, 1.636346e-002, 1.970177e-002, 1.551151e-002, 4.153643e-004, 2.076265e-003, 9.047907e-003, 2.879909e-002, 3.123036e-002, 1.804813e-002, 1.239059e-003, -8.616287e-003, -2.400659e-003, -8.365311e-003, -2.651757e-003, -1.087634e-002, -1.146242e-002, 1.845606e-002, -2.282428e-002, -2.438865e-002, 7.438915e-003, 1.741362e-002, 2.172598e-002, 3.670818e-002, -1.696711e-002, -2.236456e-002, -3.137547e-003, 6.913502e-003, 1.122270e-002, 3.413560e-003, -4.644627e-003, -1.930416e-002, -2.666824e-002, -1.689614e-003, 2.195076e-002, 1.991651e-002, 3.484812e-004, -2.792150e-002, -4.118603e-002, -3.468906e-002, -2.792566e-002, -7.345251e-003, 2.440875e-003, 1.384111e-002, 1.037765e-002, 3.137047e-003, 8.429709e-003, 1.869252e-002, 2.558699e-002, 1.857800e-002, 1.179261e-003, 6.848006e-003, 8.818147e-003, 1.935438e-002, 2.227018e-002, 1.910645e-002, 2.179832e-002, 1.632244e-002, 9.261765e-003, -8.952496e-003, 2.231308e-003, -9.029034e-003, -1.797566e-002, 6.841927e-003, -2.649778e-002, -2.190417e-002, 4.442174e-003, 1.161845e-002, -2.414696e-003, 2.107417e-002, -7.733097e-003, -2.967889e-002, -2.653027e-003, 6.377544e-003, 5.590321e-003, 1.308042e-003, 4.036698e-004, -6.272758e-003, -5.565162e-003, 1.023526e-002, 2.496189e-002, 2.096483e-002, 2.391712e-003, -1.377481e-002, -1.798152e-002, -1.216709e-002, -8.340748e-004, 1.048833e-002, 1.560941e-002, 1.276819e-002, 1.219285e-002, 1.191856e-002, 9.744271e-003, 1.378718e-002, 1.880265e-002, 8.913493e-003, 4.621188e-003, 8.422923e-003, 3.828768e-003, -9.504962e-004, 1.162738e-003, 3.025486e-003, 2.281041e-002, 2.032749e-002, 3.561915e-003, -1.395934e-002, 1.115163e-002, -4.197440e-003, -1.192793e-002, 9.081627e-003, -2.529376e-002, -1.513272e-002, 6.733578e-003, 8.990345e-003, -2.056596e-002, -6.193779e-003, 6.375251e-004, -3.002425e-002, -7.057403e-003, 4.999198e-003, -2.325137e-003, -2.371616e-003, 1.299463e-003, 6.349336e-003, 1.941397e-002, 2.416741e-002, 2.551352e-002, 2.123907e-002, 8.939268e-003, -1.064347e-003, -6.341464e-004, 1.097063e-003, 2.888912e-003, 2.464415e-003, 8.785258e-003, 1.754875e-002, 1.585583e-002, 9.355723e-003, 2.610427e-003, 5.598707e-003, 2.280664e-003, -4.886785e-003, 7.665394e-003, 5.846390e-003, -8.899009e-003, -1.380314e-002, -1.348357e-002, -1.435446e-002, 7.315218e-003, 1.021643e-002, -6.930784e-003, -1.989633e-002, 1.454563e-002, 2.675227e-003, -8.634654e-003, 1.728598e-002, -2.234897e-002, -1.365204e-002, 1.702873e-002, 9.539992e-003, -2.680191e-002, -3.290541e-002, -1.511055e-004, -1.675386e-002, -1.470455e-002, 4.128794e-003, -1.152332e-002, -1.257394e-002, -3.545952e-003, 1.051597e-002, 1.634480e-002, 1.416814e-002, 1.553772e-002, 1.289852e-002, 4.685864e-003, 2.856106e-003, 5.384278e-003, 6.958509e-003, 7.199278e-003, 5.482302e-003, 5.145871e-003, -1.211793e-003, -6.380844e-003, -1.530430e-002, -1.806401e-002, -1.167096e-002, -1.449375e-002, -1.185934e-002, 7.042801e-003, 5.749051e-003, -1.066787e-002, -1.340640e-002, -1.691228e-002, -3.634656e-003, 2.958405e-003, -1.235073e-003, -2.021295e-002, -3.036456e-002, 1.351414e-002, 9.515804e-003, -1.417861e-003, 2.388220e-002, -2.659543e-002, -1.290464e-002, 2.180248e-002, 1.486516e-002, -1.986945e-002, -3.360894e-002, -


© ISO/IEC 2004 — All rights reserved

Copyright International Organization for Standardization
Provided by IHS under license with ISO
No reproduction or networking permitted without license from IHS
Not for Resale

7.630613e-003, 9.218977e-003, -1.091769e-002, -5.635619e-003, -1.613925e-002, -1.905174e-002, -1.001785e-002, 9.970803e-004, 7.043003e-003, 1.043569e-002, 1.032489e-002, 1.083532e-002, 7.585963e-003, 1.182197e-002, 1.732066e-002, 2.372432e-002, 2.784495e-002, 2.734573e-002, 1.689035e-002, 3.410456e-003, -8.380173e-003, -2.232596e-002, -2.553921e-002, -3.147838e-002, -3.200037e-002, -1.015477e-002, 6.970536e-003, -7.860497e-004, -4.048965e-003, -5.659563e-003, -6.796290e-003, 8.669048e-003, 5.797646e-003, -4.017382e-003, -2.516753e-002, -3.850279e-002, 8.493083e-003, 8.714764e-003, 5.602351e-003, 1.721675e-002, -2.554648e-002, -1.990541e-002, 1.131801e-002, 1.766880e-002, -1.114496e-002, -3.001034e-002, -1.365725e-003, 2.675639e-002, -3.977743e-003, -9.842361e-003, -1.373465e-002, -1.980805e-002, -1.447091e-002, -7.102269e-003, -5.885223e-004, 4.296728e-004, 3.192446e-003, 6.017163e-003, 6.571861e-003, 9.842431e-003, 1.684124e-002, 2.670574e-002, 3.471504e-002, 3.325200e-002, 2.399357e-002, 9.601699e-003, -4.698442e-003, -1.473460e-002, -2.128703e-002, -3.222864e-002, -3.000682e-002, -7.772305e-003, 3.026178e-003, 2.700804e-004, 8.754389e-003, 3.131584e-003, -5.626504e-003, 1.132144e-002, 9.147228e-003, 7.840555e-003, -1.280720e-002, -3.325909e-002, 5.893803e-003, 2.863829e-003, 1.120660e-002, 1.038136e-002, -3.536835e-002, -2.484661e-002, 6.442344e-003, 1.845226e-002, -4.056120e-003, -4.568766e-003, 2.170641e-002, 3.373800e-002, 2.209520e-004, -2.450680e-003, 1.067868e-003, -1.358754e-003, -7.521559e-003, -9.838586e-003, -3.339653e-003, -5.525863e-004, -5.098797e-003, -4.551993e-003, 9.559265e-004, 6.587998e-003, 1.105567e-002, 1.583766e-002, 1.863561e-002, 1.765288e-002, 9.341845e-003, -1.030883e-003, -9.154435e-003, -8.508001e-003, -1.174765e-002, -1.624045e-002, -1.190349e-002, 2.166122e-003, 7.232883e-003, 3.860317e-003, 1.555054e-002, -7.968215e-003, -2.284901e-002, -9.551351e-004, -1.488615e-003, 9.119640e-003, 4.416398e-003, -2.051475e-002, 1.728275e-003, -3.969408e-003, 1.257779e-002, 1.244409e-002, -2.445426e-002, -1.216703e-002, 1.706954e-002, 3.051911e-002, 9.467924e-003, 8.855648e-004, 1.778102e-002, 1.283973e-002, -1.548544e-002, 5.182607e-003, 1.850697e-002, 1.658956e-002, 6.266558e-003, -7.222274e-003, -3.600775e-003, 2.634626e-003, -2.795527e-003, -7.581542e-003, -7.917939e-003, -1.579553e-003, -4.836570e-004, -2.513263e-003, -1.758245e-003, -5.971668e-004, -3.397259e-003, -9.718242e-003, -6.049109e-003, 3.147312e-003, 8.349631e-003, 8.827157e-003, 6.997225e-003, 5.501523e-003, 7.499020e-003, 3.692153e-004, 4.973766e-003, -2.178987e-002, -4.287505e-002, -2.796324e-002, -2.165430e-002, 1.050308e-003, 1.678167e-002, 3.508143e-003, 6.911434e-003, -1.224090e-002, 8.801981e-003, 2.342390e-002, -4.852870e-003, -3.777565e-003, 1.760609e-002, 2.582992e-002, -4.910530e-003, -3.004349e-003, 1.269756e-002, -1.792965e-003, -2.484038e-002, 6.189086e-003, 2.496548e-002, 2.585092e-002, 1.880633e-002, 7.632263e-003, 2.797053e-003, 2.765762e-003, 4.688297e-004, -1.071279e-003, -2.922185e-003, -2.276588e-003, -1.052530e-003, -3.667579e-003, -8.624824e-003, -1.161302e-002, -1.013742e-002, -3.166123e-003, 1.238128e-002, 2.551200e-002, 3.086409e-002, 2.442256e-002, 1.568589e-002, 8.515853e-003, 5.342875e-003, 1.326022e-003, 1.080038e-002, -8.667499e-003, -2.414144e-002, -2.716828e-002, -3.687726e-002, -1.465071e-002, 6.243442e-003, 6.845170e-003, 2.480077e-002, -5.622359e-003, 1.363367e-002, 3.255755e-002, 6.013190e-003, -6.653370e-003, 4.767453e-003, 5.869286e-003, -1.485783e-002, 7.387036e-004, 1.896551e-002, -2.453528e-003, -1.257858e-002, 7.142546e-003, 1.795610e-002, 1.731683e-002, 1.078696e-002, 9.582877e-003, 4.182056e-003, -2.031339e-003, -2.397481e-003, -3.993769e-003, -2.260714e-003, -1.664326e-003, -2.680923e-003, -8.890858e-003, -1.490943e-002, -1.869803e-002, -1.354933e-002, -3.514830e-003, 1.356467e-002, 2.262526e-002, 2.169075e-002, 1.085256e-002, 7.680219e-003, -3.696400e-003, 3.483810e-003, 2.796114e-003, 2.047044e-002, 2.452621e-002, 2.580090e-002, 1.617624e-002, -2.327477e-003, -3.313610e-003, -1.223490e-003, -1.529805e-002, 1.224328e-002, 9.142878e-004, 5.621212e-003, 1.530942e-002, -7.866434e-003, -1.044305e-002, -2.945988e-003, -3.034581e-003, -8.511784e-003, 9.050152e-003, 2.666687e-002, 4.652574e-003, 6.311028e-003, 2.354282e-002, 1.478882e-003, -6.640576e-003, -1.418290e-003, 9.534576e-004, -6.623717e-003, -6.892363e-003, -7.162851e-003, -1.420000e-003, 2.992812e-003, 7.956897e-003, 1.126884e-002, 9.606249e-003, 5.177136e-003, -1.306894e-003, -7.549994e-003, -9.533388e-003, -1.726649e-002, -8.509660e-003, -2.930910e-003, -6.469447e-003, -1.345721e-002, -1.266658e-002, -2.832357e-003, -3.033315e-003, 1.031707e-003, 7.872377e-003, 3.142913e-002, 3.954601e-002, 3.119506e-002, 3.276370e-002, 1.093942e-002, -3.172028e-002, -1.903746e-002, -2.883463e-002, 5.701525e-003, 2.229885e-002, 3.207565e-002, 5.548569e-003, 1.224908e-002, 1.646093e-002, 1.171998e-002, 1.360857e-002, 4.731228e-002, 2.423496e-002, 2.094481e-002, 3.018060e-002, 1.075286e-003, -1.465066e-002, -3.584495e-003, 5.641703e-003, -1.321183e-003, -2.948997e-004, -1.477335e-003, 2.873117e-003, 5.348469e-003, 8.425954e-003, 1.085986e-002, 8.609478e-003, 5.264769e-004, -1.293518e-002, -2.938544e-002, -3.376348e-002, -2.867352e-002, -1.564777e-002, -2.603399e-003, 3.610471e-003, -1.595570e-003, 1.984013e-003, 9.878490e-003, 1.224871e-002, -6.621824e-003, -1.777121e-003, 1.426495e-002, 2.463412e-002, 2.213690e-002, 3.581785e-002, 3.956134e-002, 2.495084e-002, -1.266422e-002, -3.059184e-002, 9.361163e-003, 3.492465e-002, 4.053968e-002, 7.431544e-003, 1.217034e-002, 1.205833e-002, -6.517527e-003, -9.804554e-003, 3.231567e-002, 1.766733e-002, 7.859860e-003, 2.290226e-002, 1.056681e-002, -9.653218e-003, -9.466833e-003, 7.498423e-003, 6.318595e-003, 7.628248e-003, 3.472618e-003, 5.527649e-003, 2.516053e-003, 2.337409e-003, 3.064037e-003, 4.286869e-004, -

© ISO/IEC 2004 — All rights reserved


Copyright International Organization for Standardization
Provided by IHS under license with ISO
No reproduction or networking permitted without license from IHS
Not for Resale

9.000642e-003, -2.064141e-002, -2.791043e-002, -3.004199e-002, -2.129160e-002, -4.963776e-003, 9.206900e-003, 1.614436e-002, 1.527028e-002, 7.185390e-003, 8.078955e-003, 1.004142e-002, -3.793798e-003, -1.173599e-004, 2.063252e-003, -8.743994e-003, 4.863981e-003, 9.543730e-003, 1.271412e-002, 2.619975e-002, 7.099068e-003, -1.548789e-002, 9.712804e-003, 2.945259e-002, 2.140325e-002, -2.473867e-002, -1.353013e-002, -1.533564e-003, -2.212544e-002, -2.940964e-002, 1.020090e-002, -7.350668e-003, -2.537149e-002, 4.496971e-003, 9.608318e-003, -5.957907e-003, -1.736959e-002, -4.873079e-005, 8.549276e-003, 7.876838e-003, 5.632877e-003, 1.085154e-002, 1.081057e-002, 8.054936e-003, 3.134882e-003, 2.642781e-005, -6.514825e-003, -9.343482e-003, -1.524981e-002, -1.639924e-002, -8.253806e-003, 3.042761e-003, 1.449114e-002, 1.837632e-002, 1.676670e-002, 5.808372e-003, -9.126519e-003, -1.399026e-002, 3.452581e-003, 1.302902e-003, 3.165739e-003, -2.103378e-002, -2.055508e-002, -5.049928e-003, -8.574361e-003, -7.438893e-003, -6.746396e-003, -1.099613e-002, -1.747690e-002, -8.120624e-003, -6.583027e-003, -1.626992e-005, 2.871900e-002, 2.982517e-002, 8.251735e-003, -1.549648e-002, 3.656604e-003, -1.673158e-002, -3.056744e-002, -1.001110e-003, 9.508564e-003, 6.415651e-003, -8.090778e-003, -5.727313e-003, 4.035573e-003, 5.574114e-003, 3.978135e-003, 3.981771e-003, 5.356635e-003, 8.920779e-003, 8.529381e-003, 7.021725e-003, 4.009838e-003, 6.011130e-004, -4.071557e-003, -8.819175e-003, -6.442017e-003, -8.667456e-004, 1.241487e-002, 1.624064e-002, 1.596902e-002, 7.615287e-003, -1.596670e-002, -7.155681e-003, 1.521277e-002, 8.688585e-003, 2.099581e-002, -1.130204e-002, -1.451859e-002, 1.939328e-002, 1.182242e-002, -9.195346e-003, -3.565184e-002, -3.090058e-002, -4.845317e-002, -3.380387e-002, -2.542524e-002, -1.581763e-002, 4.151700e-003, 4.363734e-004, -1.680594e-002, -3.364823e-002, -2.339370e-002, -3.702615e-002, -4.906781e-002, -2.282752e-002, -1.312542e-002, -1.205035e-002, -5.051652e-003, -7.666386e-003, -5.042300e-003, -2.677968e-003, 7.257735e-004, 2.682200e-004, 2.750665e-003, 5.090711e-003, 3.957875e-003, 3.778095e-003, 2.828336e-003, -1.432486e-003, -7.696195e-003, -1.402030e-002, -1.795580e-002, -1.778883e-002, -1.015527e-002, -7.999924e-003, -2.808762e-003, 6.588609e-003, -3.691040e-003, 3.568495e-004, 5.119206e-003, 2.295351e-002, 4.446664e-002, 1.761195e-002, 5.870879e-003, 3.343239e-002, 2.359024e-002, 4.809962e-003, -2.431145e-002, -3.237069e-002},
{1.491630e-002, 1.356167e-002, 1.366184e-002, 2.092062e-002, 3.605641e-002, 4.937050e-002, 4.442758e-002, 1.586865e-002, -5.992039e-003, -5.848404e-003, -6.686270e-004, -1.838209e-003, 2.772452e-003, 2.796168e-003, 9.439777e-004, -1.897663e-003, -1.155497e-003, 6.587345e-003, 1.337264e-002, 2.047940e-002, 2.584366e-002, 2.186748e-002, 1.480181e-002, 2.968122e-003, -7.407104e-003, -1.232932e-002, -1.275284e-002, -9.343141e-003, -3.315192e-003, 3.467643e-004, 4.882804e-003, -6.474699e-003, -2.212658e-002, -3.100372e-002, -2.127386e-002, -1.348947e-002, -1.123911e-002, -1.336378e-002, -1.111300e-002, -4.327578e-003, -2.350188e-004, 7.414585e-003, 5.954392e-003, -8.124175e-003, -1.025543e-002, -6.270236e-003, -2.621008e-003, -1.588145e-002, -1.559157e-002, -9.555752e-003, 9.031419e-003, 1.106738e-002, -8.596956e-003, -1.778799e-002, -1.192485e-002, -3.295305e-004, 1.548778e-002, 2.974539e-002, 3.223074e-002, 2.374267e-002, 1.402185e-002, 1.236446e-002, 1.627344e-002, 2.593286e-002, 2.957060e-002, 3.304985e-002, 3.121404e-002, 2.232068e-002, 1.016057e-002, -2.264110e-003, -1.160155e-002, -2.036403e-002, -2.832789e-002, -3.362143e-002, -3.006563e-002, -1.778660e-002, 5.113857e-003, 1.665267e-002, 8.566891e-003, -3.966895e-003, -5.170921e-003, 2.990338e-003, 7.143836e-003, 5.920810e-003, -5.116492e-003, -1.250759e-002, -1.652831e-002, -1.502053e-002, -1.746971e-002, -2.992242e-002, -6.259666e-003, 3.095385e-003, -7.879530e-003, -2.018904e-002, -2.072456e-002, -1.319932e-002, -5.324144e-003, -1.931535e-002, -2.796291e-002, -9.863126e-003, 1.170877e-002, 1.552109e-002, 1.538399e-002, 2.081485e-002, 1.540293e-002, 1.258576e-002, 6.048802e-003, 1.322052e-002, 1.787529e-002, 2.160398e-002, 2.161084e-002, 2.337414e-002, 2.612497e-002, 1.790140e-002, 7.565044e-003, -2.389478e-003, -1.187518e-002, -1.937103e-002, -2.906999e-002, -3.161062e-002, -3.460051e-002, -3.201516e-002, -9.699057e-003, 1.091494e-002, 1.945221e-002, 1.311505e-002, -3.137138e-003, 3.673364e-003, 1.348456e-002, 1.184056e-002, 8.742804e-003, -6.386962e-003, -9.481245e-003, -4.158219e-003, -4.253090e-003, -1.376588e-002, 7.210768e-004, 9.966646e-003, -1.202345e-002, -2.473908e-002, -1.774128e-002, -1.660366e-002, -2.035869e-002, -2.710382e-002, -1.151830e-002, 1.070897e-002, 5.853288e-003, -2.478258e-003, -8.342447e-003, -3.480124e-003, 5.982616e-003, 5.879133e-003, 9.177160e-003, 1.226615e-002, 1.472813e-002, 1.945720e-002, 2.404222e-002, 2.038463e-002, 1.968328e-002, 1.328463e-002, 2.822716e-003, -3.333186e-003, -1.112014e-002, -1.283675e-002, -1.922017e-002, -2.300570e-002, -1.977018e-002, -1.684095e-002, -7.936386e-003, 6.385246e-003, 1.613020e-002, 1.373594e-002, -9.458424e-004, -9.467210e-003, 5.080028e-003, 1.059020e-002, 7.865851e-003, -5.774759e-003, -1.836200e-002, -4.629631e-003, 3.003663e-003, -5.492188e-003, -2.200136e-004, 1.059051e-002, 2.980957e-003, -7.406711e-003, -2.605482e-003, -1.238212e-002, -2.033039e-002, -7.974707e-003, 4.580846e-003, 2.369258e-004, -2.333434e-002, -3.758467e-002, -3.088453e-002, -8.978919e-003, -2.161676e-003, -8.637970e-003, -1.058559e-002, 4.356764e-004, 9.857354e-003, 1.091879e-002, 1.210043e-002, 1.092476e-002, 5.267046e-003, -4.727594e-003, -1.641135e-002, -2.200049e-002, -2.286298e-002, -1.986496e-002, -2.180137e-002, -2.170233e-002, -1.591133e-002, -5.566148e-003, 4.001752e-003, 8.389596e-003, 1.037554e-002, 1.241569e-002, -1.498003e-003, -1.357407e-002, -1.934252e-002, -3.692555e-003, -7.991060e-004, -1.717169e-002, -


© ISO/IEC 2004 — All rights reserved

Copyright International Organization for Standardization
Provided by IHS under license with ISO
No reproduction or networking permitted without license from IHS
Not for Resale

3.599009e-002, -1.905718e-002, 5.465401e-003, -6.246056e-004, -5.796366e-003, 8.081814e-003, 8.893083e-003, -5.686907e-003, -6.177289e-003, -1.490012e-002, 1.613283e-003, 8.345758e-003, 7.627857e-003, -2.094192e-003, -3.725294e-002, -3.631365e-002, -9.351244e-003, 5.998924e-003, -2.594245e-003, -1.248687e-002, -4.796648e-003, 1.385812e-002, 2.284518e-002, 1.810767e-002, 1.026948e-002, 4.119518e-003, -7.676371e-003, -1.983895e-002, -3.000301e-002, -3.370061e-002, -2.947057e-002, -2.355206e-002, -2.315176e-002, -1.358899e-002, 2.421478e-004, 1.284994e-002, 2.184698e-002, 2.800780e-002, 2.512735e-002, 2.163520e-002, 1.829304e-002, -2.930616e-004, -1.789214e-002, -7.936844e-003, 1.204062e-002, 2.578330e-004, -1.682796e-002, -1.318035e-002, 1.723059e-002, 2.153066e-002, 1.214961e-002, 2.245631e-002, 1.016621e-002, -7.198615e-003, -6.406023e-003, -1.444076e-003, 1.672664e-002, 2.117205e-003, 7.686534e-003, -1.323882e-002, -4.091920e-002, -1.824390e-002, 4.130334e-003, -1.027850e-002, -2.639655e-002, -1.625877e-002, 1.010049e-002, 2.147473e-002, 1.972230e-002, 1.254844e-002, 3.237460e-003, -3.812654e-003, -9.493846e-003, -1.584252e-002, -2.088200e-002, -2.153888e-002, -1.318055e-002, -6.189147e-003, -1.074616e-002, -1.047430e-002, 2.842539e-004, 1.579828e-002, 2.814206e-002, 3.344986e-002, 2.348011e-002, 1.671458e-002, 1.956614e-002, 8.068787e-003, -9.661146e-003, -1.504857e-002, 7.335849e-003, 8.111270e-003, -6.591332e-003, -9.666923e-003, 9.249611e-003, 2.306845e-002, 1.024046e-002, 1.948163e-002, 6.322248e-003, -1.212382e-002, 1.763611e-003, 1.392188e-002, 9.776305e-003, -6.562576e-003, 1.318243e-002, -1.555435e-002, -1.592607e-002, 4.442671e-003, -4.430052e-003, -3.298636e-002, -2.643097e-002, -1.807054e-003, 8.061120e-003, 1.252409e-003, -5.537379e-003, -5.456543e-003, -5.160152e-003, 1.161110e-003, 7.004598e-003, 6.291197e-003, 1.026555e-002, 1.379805e-002, 2.231947e-002, 2.669342e-002, 1.365415e-002, -3.893598e-003, -8.026213e-003, -7.699562e-004, 1.227920e-002, 2.080850e-002, 2.468726e-002, 1.263895e-002, 5.423569e-003, 8.347882e-003, 3.897671e-004, -9.399713e-003, 4.193557e-003, 1.965657e-002, -2.691121e-003, -8.393505e-004, 1.281769e-002, 2.511243e-002, 5.565758e-003, 1.299998e-002, 4.230330e-003, -1.222179e-002, 1.436515e-002, 1.271393e-002, -9.117428e-003, -3.000635e-003, 1.535910e-002, -1.776016e-003, 4.477252e-003, 7.538988e-003, -2.304609e-002, -3.669095e-002, -1.566248e-002, -1.571538e-003, -1.346869e-002, -3.163029e-002, -2.719196e-002, -1.457712e-002, 2.884946e-003, 1.766927e-002, 2.693102e-002, 2.739137e-002, 3.431797e-002, 4.284562e-002, 4.816234e-002, 4.488272e-002, 2.284777e-002, -4.329573e-003, -2.172526e-002, -2.561940e-002, -1.936837e-002, -6.447437e-003, 7.992973e-003, 1.108385e-002, -2.223256e-003, -1.152308e-003, 3.209550e-003, -6.047883e-003, 6.852059e-003, 2.350533e-002, 7.499216e-003, 4.962810e-003, 2.305173e-002, 1.812819e-002, -6.334632e-003, 4.073847e-003, 3.720332e-003, -6.238882e-003, 2.084195e-002, 3.569266e-003, -2.045309e-002, 9.626019e-003, 1.890369e-002, 4.292178e-003, 6.945234e-003, -6.034986e-003, -2.793765e-002, -1.902509e-002, -4.557414e-003, -1.003484e-002, -3.184572e-002, -3.927977e-002, -2.597521e-002, -4.219175e-003, 1.757874e-002, 2.699510e-002, 3.532576e-002, 3.368247e-002, 3.919628e-002, 4.624357e-002, 4.895233e-002, 4.078728e-002, 1.894427e-002, -8.914492e-003, -3.189375e-002, -4.557506e-002, -4.483836e-002, -3.294130e-002, -1.803046e-002, -7.059955e-003, -8.628457e-003, -1.020351e-002, -1.768706e-003, 3.669420e-004, 4.363527e-003, 2.110287e-002, 1.431507e-002, 2.180989e-003, 2.393085e-002, 1.091169e-002, -1.779668e-002, -1.296791e-002, 6.029087e-003, 6.206874e-003, 1.713283e-002, -9.689635e-003, -1.841823e-002, 1.699012e-002, 1.839448e-002, 7.907234e-003, 2.623977e-003, -1.857686e-002, -1.909280e-002, -2.676601e-003, 1.442410e-004, -1.137779e-002, -2.193966e-002, -2.324963e-002, -1.024238e-002, 4.714341e-003, 1.531749e-002, 1.272987e-002, 1.322829e-002, 9.306579e-003, 1.581117e-002, 2.795047e-002, 3.643923e-002, 3.326604e-002, 1.341994e-002, -1.271744e-002, -3.270374e-002, -4.381941e-002, -4.804131e-002, -4.166173e-002, -2.714043e-002, -8.801720e-003, -7.055484e-003, -4.561738e-003, 1.428182e-003, 6.848727e-003, 7.467435e-003, 1.952715e-002, 9.962970e-003, 3.743587e-003, 2.377738e-002, 8.299235e-003, -3.576566e-002, -2.337784e-002, 9.727301e-003, 7.132330e-003, 1.459653e-002, -1.732792e-002, -7.209899e-003, 1.875737e-002, 1.368373e-002, 7.474520e-003, -2.407760e-003, -1.500753e-002, -3.205483e-003, 5.928360e-003, -4.000246e-004, -6.660977e-003, -9.840168e-003, -1.026714e-002, -5.665174e-004, 4.060136e-003, 2.854339e-003, -6.378326e-003, -1.649697e-002, -2.251225e-002, -1.740958e-002, 2.389113e-003, 1.981697e-002, 2.761350e-002, 1.514230e-002, -3.111751e-003, -2.357794e-002, -3.240039e-002, -4.032201e-002, -3.548003e-002, -2.218726e-002, -1.510069e-003, 4.254491e-003, 2.538034e-003, 1.043378e-002, 1.674511e-002, 1.017181e-002, 1.342610e-002, 4.928119e-003, -4.658075e-003, 2.303241e-002, 1.977042e-002, -3.860346e-002, -3.753277e-002, 1.290631e-002, 6.546515e-003, 2.743070e-003, -1.221440e-002, -2.318736e-003, 9.937463e-003, 7.648315e-003, 3.153870e-003, -8.513961e-003, -5.604740e-003, 4.715768e-003, 6.113888e-003, 8.157705e-004, -3.314323e-003, -1.327626e-004, 3.328601e-003, 8.287837e-003, 7.149164e-003, -2.651863e-003, -2.041525e-002, -4.167022e-002, -4.950922e-002, -4.139252e-002, -1.664686e-002, 6.316576e-003, 2.372482e-002, 2.558325e-002, 1.617945e-002, -4.606875e-003, -1.965939e-002, -2.440682e-002, -1.728722e-002, -7.688466e-003, 8.158700e-003, 1.818061e-002, 9.026669e-003, 3.676176e-003, 1.566844e-002, 1.723368e-002, 7.673900e-003, -1.151990e-003, -1.236855e-002, 1.860188e-002, 3.141243e-002, -2.450466e-002, -4.462368e-002, 1.495710e-002, -1.571327e-003, -6.009858e-005, -6.641561e-003, 6.232279e-004, 3.605026e-004, -5.180145e-004, 1.117622e-003, -6.042896e-003, -4.102666e-004,

© ISO/IEC 2004 — All rights reserved


Copyright International Organization for Standardization
Provided by IHS under license with ISO
No reproduction or networking permitted without license from IHS
Not for Resale

1.450370e-003, -1.042895e-003, -1.309684e-003, 4.811706e-003, 1.212920e-002, 1.479798e-002, 1.855680e-002, 1.254294e-002, -9.286768e-004, -2.555596e-002, -5.062726e-002, -6.167975e-002, -5.964675e-002, -3.528362e-002, -8.759940e-003, 2.364858e-002, 3.251431e-002, 2.902227e-002, 1.424747e-002, -4.676470e-003, -1.046496e-002, -5.096917e-003, -1.894464e-003, 1.188775e-002, 1.985677e-002, 9.903033e-003, -1.025526e-002, 2.482299e-003, 1.501148e-002, 2.140798e-004, -1.430024e-002, -2.234815e-002, 4.637664e-003, 3.094667e-002, -8.325591e-003, -3.654923e-002, 1.513770e-002, -3.436184e-003, -1.396973e-003, -4.857691e-003, 1.578049e-003, -8.132617e-003, -5.194545e-003, -2.969945e-004, -5.261125e-004, 1.104234e-003, -1.780011e-003, -6.813042e-003, 8.607864e-004, 1.793197e-002, 2.595835e-002, 3.496089e-002, 3.837052e-002, 2.934605e-002, 9.223456e-003, -2.376557e-002, -4.843101e-002, -6.360038e-002, -6.315145e-002, -4.221087e-002, -1.738499e-002, 1.830987e-002, 3.324041e-002, 3.061684e-002, 2.281440e-002, 9.796478e-003, 3.767477e-004, 1.390285e-003, 6.067120e-003, 1.661269e-002, 2.111265e-002, 4.678577e-003, -2.342894e-002, -1.883013e-002, 2.912746e-003, -6.659155e-003, -1.803401e-002, -2.548833e-002, -7.843277e-003, 2.278670e-002, 1.496461e-002, -2.148097e-002, 1.510977e-002, -2.234912e-003, 4.497004e-003, -2.846735e-003, 2.402769e-003, -5.488812e-003, -3.852572e-003, 5.847504e-003, 6.039023e-003, -3.859523e-003, -1.382870e-002, -1.272219e-002, 9.532038e-003, 3.612738e-002, 4.696232e-002, 5.266702e-002, 4.933233e-002, 4.134275e-002, 1.567361e-002, -1.849355e-002, -4.659205e-002, -6.345224e-002, -6.296855e-002, -4.166356e-002, -2.130995e-002, 8.963675e-003, 3.081298e-002, 2.971279e-002, 2.040009e-002, 1.473068e-002, 1.429908e-002, 9.459886e-003, 6.347932e-003, 1.666917e-002, 2.178909e-002, 1.394838e-004, -3.152144e-002, -3.212533e-002, -6.108213e-003, -1.482918e-002, -2.185977e-002, -2.298833e-002, -1.737415e-002, 1.036096e-002, 3.505616e-002, 8.667103e-003, 1.647825e-002, 3.621138e-003, 9.670155e-003, -2.115748e-003, 7.585413e-003, -3.404623e-003, -4.072872e-003, 1.062098e-002, 6.755992e-003, -9.605319e-003, -1.854139e-002, -1.149618e-002, 1.919235e-002, 4.381781e-002, 5.474198e-002, 5.454900e-002, 4.908014e-002, 3.703608e-002, 1.247565e-002, -1.795219e-002, -4.331975e-002, -5.819835e-002, -5.742908e-002, -4.097501e-002, -2.487309e-002, 1.153323e-003, 2.322301e-002, 2.672056e-002, 2.233825e-002, 1.896774e-002, 1.897396e-002, 1.429320e-002, 8.318239e-003, 1.962560e-002, 3.126886e-002, 3.772468e-003, -3.127275e-002, -3.426075e-002, -6.576732e-003, -1.450650e-002, -1.698325e-002, -1.779549e-002, -1.883446e-002, -7.515499e-003, 3.279246e-002, 3.269786e-002, 1.619912e-002, 9.759330e-003, 1.043823e-002, -5.569309e-003, 1.056355e-002, 3.817879e-003, 4.652730e-003, 1.538914e-002, 9.301027e-003, -1.178796e-002, -1.592005e-002, -6.963700e-004, 1.946894e-002, 2.532024e-002, 2.401699e-002, 1.738057e-002, 1.077776e-002, 7.698094e-003, 1.717644e-003, -1.625441e-002, -3.586381e-002, -4.656823e-002, -4.587793e-002, -3.571015e-002, -2.422641e-002, -4.475455e-003, 1.483321e-002, 1.384325e-002, -3.505049e-004, -8.973987e-003, -1.042885e-002, -7.673434e-003, -7.674971e-004, 1.978685e-002, 4.797851e-002, 2.735875e-002, -1.228914e-002, -2.460418e-002, -7.173166e-003, -4.489592e-005, 1.294709e-003, -4.593539e-003, -1.146006e-002, -2.007507e-002, 1.695865e-002, 4.939612e-002, 2.186838e-002, 1.454752e-002, 1.139210e-002, -7.477371e-003, 1.533498e-002, 1.599921e-002, 1.250041e-002, 1.752348e-002, 1.304836e-002, 7.867383e-004, 2.161131e-003, 1.356471e-002, 1.760408e-002, 1.053098e-003, -2.287652e-002, -3.341799e-002, -3.031002e-002, -2.024396e-002, -3.270287e-003, 3.372082e-003, -1.113786e-002, -2.566124e-002, -2.947973e-002, -2.539501e-002, -1.553709e-002, 3.102948e-003, 1.894988e-002, 1.047682e-002, -1.697194e-002, -3.779372e-002, -4.268111e-002, -4.180766e-002, -3.539113e-002, -1.878718e-002, 2.273458e-002, 4.305170e-002, 1.752628e-002, -1.504698e-003, 4.440660e-004, 1.096616e-002, 2.115448e-002, 1.104713e-002, 6.805480e-003, -1.825440e-002, 3.185730e-003, 5.612300e-002, 2.201595e-002, 1.473773e-002, 3.867165e-003, -2.138132e-003, 1.529263e-002, 2.085546e-002, 9.389049e-003, 7.641084e-003, 1.250222e-002, 1.911820e-002, 2.090064e-002, 1.564694e-002, 5.354153e-003, -1.279204e-002, -2.956167e-002, -3.614159e-002, -2.835841e-002, -1.434911e-002, 6.936711e-003, 2.372859e-002, 1.973209e-002, 3.043600e-003, -7.984033e-003, -8.634088e-003, 4.378295e-003, 2.093839e-002, 3.835125e-002, 2.916548e-002, 7.216737e-003, -1.335171e-003, -5.553557e-003, -9.041823e-003, -1.691435e-002, -2.219355e-002, -1.664455e-002, 1.111839e-002, 2.599389e-002, 1.840129e-002, 1.218735e-002, 1.025826e-002, 3.274607e-002, 2.384122e-002, 1.972333e-002, -2.376196e-002, -1.263223e-002, 5.490953e-002, 1.336825e-002, 5.571443e-003, 7.916096e-003, -9.730075e-004, 1.567993e-002, 1.039557e-002, -6.829485e-003, -6.094099e-003, 1.226473e-002, 3.308001e-002, 1.481675e-002, -1.472652e-003, -2.566458e-003, 1.233523e-003, -7.480537e-003, -1.103697e-002, -1.673256e-002, -2.085207e-002, -1.915196e-002, -9.499723e-003, 6.036906e-003, 1.216955e-002, 6.943613e-003, 2.638034e-003, 1.372923e-002, 2.120419e-002, 1.894739e-002, 2.591833e-003, -3.434605e-003, 4.104136e-003, 1.161523e-002, 2.281051e-002, 3.566826e-002, 2.670385e-002, 4.280995e-003, -1.213144e-002, 6.654683e-004, 1.266577e-002, 1.237312e-002, 4.059479e-003, 2.033832e-002, 2.656583e-002, 2.356165e-002, -2.134195e-002, -2.374775e-002, 4.288289e-002, 7.087036e-003, 2.372898e-003, 1.911380e-003, -9.246944e-003, 1.608261e-003, -9.902315e-003, -2.855864e-002, -1.314448e-002, 6.509213e-003, 3.515324e-002, 2.893696e-002, 2.054674e-002, 2.942165e-002, 3.569524e-002, 2.961579e-002, 2.508563e-002, 2.014337e-002, 5.869806e-004, -2.517463e-002, -3.081092e-002, -8.509122e-003, 1.565629e-002, 2.238756e-002, 1.760101e-002, 1.716398e-002, 1.546634e-002, -


© ISO/IEC 2004 — All rights reserved

Copyright International Organization for Standardization
Provided by IHS under license with ISO
No reproduction or networking permitted without license from IHS
Not for Resale

1.181094e-002, -4.589015e-002, -6.448468e-002, -5.098294e-002, -2.244381e-002, 1.450066e-002, 4.541799e-002, 5.794620e-002, 4.007842e-002, 4.793010e-003, 5.060562e-003, 3.590555e-003, 2.931457e-003, 3.144222e-004, -2.942923e-003, 4.607652e-003, 2.225893e-002, -9.740608e-003, -2.649546e-002, 3.355729e-002, 6.933549e-005, -3.462570e-003, -8.836325e-003, -3.190168e-002, -1.390396e-002, -1.682906e-002, -3.119842e-002, -1.515236e-002, -1.442194e-002, 4.649157e-002, 3.430772e-002, 2.702404e-004, -6.185846e-003, -1.008271e-002, -7.203429e-003, -1.619075e-003, 5.425502e-003, -1.968380e-003, -9.377029e-003, -1.967141e-002, -5.485658e-003, 1.790157e-002, 2.309527e-002, 1.750094e-002, 2.066377e-002, 1.374421e-002, -1.130159e-002, -5.306983e-002, -7.413962e-002, -5.554104e-002, -2.038007e-002, 1.187021e-002, 3.601906e-002, 4.930908e-002, 3.730819e-002, 1.559751e-002, 2.174694e-002, 7.683202e-003, -1.679001e-002, -2.019694e-002, -3.278705e-002, -2.300494e-002, 6.601947e-003, -6.338027e-003, -2.010933e-002, 1.295819e-002, -5.930441e-003, -1.370013e-002, -1.498994e-002, -2.930951e-002, -1.570936e-002, -1.259115e-002, -1.038059e-002, -2.160645e-003, -2.312889e-002, 2.923278e-002, -4.219971e-004, -4.570371e-002, -3.596651e-002, -3.852508e-002, -3.342539e-002, -8.762335e-003, 5.766754e-004, -2.015930e-002, -1.524132e-002, -4.629121e-003, -5.532276e-004, 1.853030e-002, 5.615236e-003, 5.917076e-003, 3.356535e-002, 4.115536e-002, 2.028554e-002, -1.028412e-002, -4.268573e-002, -5.290341e-002, -1.201857e-002, 1.936037e-002, 4.699211e-003, -4.856834e-003, -8.305467e-003, -2.056314e-002, 5.958701e-003, 9.504707e-003, -2.279669e-002, -2.820577e-002, -5.532153e-002, -3.322840e-002, -7.290745e-003, -1.602461e-002, -2.175811e-002, 1.516474e-003, -1.321545e-002, -1.419467e-002, -1.813815e-003, -7.221800e-003, -6.089159e-003, -5.689495e-003, 1.101082e-002, 2.457319e-002, -1.568891e-002, 2.766649e-002, -8.525657e-003, -3.589953e-002, -1.579983e-002, -4.101393e-002, -6.449518e-002, -2.633581e-002, -2.764840e-002, -3.274480e-002, -1.017677e-002, 8.094288e-003, 2.716969e-002, 1.756009e-002, -4.671464e-003, -8.345569e-004, 1.599505e-002, 4.931705e-002, 4.585708e-002, 2.348157e-002, -2.958429e-002, -6.032816e-002, -3.705218e-002, -7.044163e-003, -1.639843e-002, -3.388084e-003, -1.760441e-002, -3.796670e-002, -1.658194e-002, 6.469021e-003, -1.838577e-002, -2.346779e-002, -4.649710e-002, -2.491975e-002, -9.470466e-003, -1.155990e-002, -1.292799e-002, -2.392368e-002, -1.641563e-002, -1.957141e-002, 6.415279e-003, 9.284711e-003, 2.507658e-003, 8.912455e-004, 2.529953e-002, 2.437976e-002, -3.211343e-002, 3.835665e-003, 4.746627e-003, -7.595153e-003, 3.602315e-003, 4.867720e-003, 1.655608e-004, -3.437889e-003, -1.024519e-003, 1.136977e-002, 1.518887e-002, 2.346508e-002, 3.347352e-002, 1.218611e-003, 5.087642e-003, 9.276937e-003, 7.162753e-003, 3.400868e-002, 3.264624e-002, 3.537227e-002, 2.394356e-002, 1.311625e-002, 4.208526e-003, 1.331882e-002, 2.378484e-002, 3.020180e-002, 1.487984e-003, -2.954589e-002, -2.119820e-002, 5.582615e-003, -2.401739e-002, -1.485298e-002, -2.621628e-002, -2.008427e-002, -1.511922e-002, -2.983464e-003, -9.015554e-003, -3.757523e-002, -1.823965e-002, -1.606768e-002, 8.847200e-003, 1.398681e-002, 2.548210e-003, 1.509845e-003, 2.823539e-002, 1.164831e-002, -3.937427e-002, -1.144989e-002, 1.366306e-002, 5.342976e-003, 5.170081e-003, 1.512657e-002, 2.779112e-002, 3.204259e-002, 3.092278e-002, 3.123138e-002, 2.480555e-002, 1.778599e-002, 1.678478e-002, -1.295542e-002, 8.857662e-003, 8.824491e-003, 7.677556e-003, 1.208518e-002, 1.687570e-002, 2.187771e-002, 3.508345e-002, 3.494749e-002, 3.379974e-002, 3.340854e-002, 2.543238e-002, 1.533245e-002, -3.176252e-003, -2.442383e-002, -1.915288e-002, 3.620033e-003, -2.532077e-002, -1.541864e-002, -9.385096e-003, -1.508449e-002, -2.316051e-002, -6.545267e-003, -5.656294e-003, -4.701232e-002, -1.528096e-002, -5.998944e-003, 8.317780e-003, 2.008064e-002, 5.646496e-003, -7.299537e-003, 2.106943e-002, 1.602509e-003, -3.193997e-002, -5.899794e-003, 1.267447e-002, 1.400668e-003, 2.745016e-004, 1.764260e-002, 3.094405e-002, 3.404717e-002, 2.646417e-002, 1.653797e-002, -4.228904e-003, -1.220894e-003, -1.231568e-002, -1.570718e-002, 2.027933e-004, -1.315750e-002, -1.223516e-002, -2.456306e-003, -4.527122e-003, -1.522924e-002, -2.935127e-003, 1.536755e-002, 1.957988e-002, 1.509777e-002, 1.294385e-002, 7.625559e-003, -7.487001e-003, -2.062399e-002, -9.453988e-003, 2.192439e-003, -1.394668e-002, -8.152990e-003, 2.176669e-003, -7.032531e-003, -2.349138e-002, -1.653692e-002, -1.854950e-003, -4.738317e-002, -1.231365e-002, -7.389266e-004, 8.766259e-003, 1.267715e-002, 7.415267e-003, -2.492345e-003, 1.877331e-002, 3.889696e-003, -2.035637e-002, 4.549854e-003, 2.286973e-002, 5.153718e-003, -4.779011e-003, 2.722629e-003, 9.330985e-003, 8.902597e-003, -9.313785e-004, -1.390889e-002, -1.520621e-002, -8.925410e-003, -2.335814e-002, -1.042118e-002, -1.349986e-002, -3.389920e-002, -3.052295e-002, -1.190473e-002, -1.454983e-002, -3.141192e-002, -3.497025e-002, -2.120662e-002, -9.997611e-003, -4.962971e-003, -1.652676e-003, 1.032473e-003, -2.474727e-003, -4.684191e-003, 2.035129e-003, 7.541626e-003, 4.412033e-003, 1.213777e-002, 1.179419e-002, 7.871279e-003, -2.474980e-002, -2.280501e-002, -5.346169e-003, -2.687781e-002, -2.311194e-002, 3.398862e-002, 5.967098e-003, -3.412600e-003, 3.657778e-003, -6.844031e-003, 2.041055e-002, 5.660808e-003, -1.035276e-002, 1.835357e-002, 3.203936e-002, 2.343229e-002, 6.219394e-003, 1.619133e-003, -4.183836e-003, -9.752018e-003, -1.855887e-002, -1.775534e-002, -1.250507e-002, -1.237126e-002, -1.093896e-002, -3.694934e-003, -1.823184e-002, -3.873620e-002, -3.810339e-002, -2.037331e-002, -1.751746e-002, -2.546077e-002, -4.228682e-002, -4.066152e-002, -2.964713e-002, -1.608992e-002, -7.506474e-003, 2.889236e-003, 4.340900e-003, -2.237188e-003, 8.943912e-003, 1.894126e-002, 1.577517e-002, 2.538149e-002, 2.119535e-002, 1.354252e-002, -

© ISO/IEC 2004 — All rights reserved


Copyright International Organization for Standardization
Provided by IHS under license with ISO
No reproduction or networking permitted without license from IHS
Not for Resale

6.645427e-003, -9.380781e-003, -5.195110e-003, -9.627324e-003, -4.579154e-002, 3.019532e-002, 3.753677e-003, -8.501686e-003, 3.055417e-003, -1.466919e-002, 1.901310e-002, 4.860391e-003, -7.876029e-003, 3.013613e-002, 3.483595e-002, 2.888840e-002, 2.064727e-002, 1.503070e-002, 8.013735e-003, -6.570623e-003, -1.770959e-002, -1.710330e-002, -8.156033e-003, 4.900541e-006, 6.481440e-003, 7.065664e-003, -4.685079e-003, -2.440312e-002, -2.251902e-002, -1.553723e-003, 4.141320e-004, -1.291785e-002, -3.685575e-002, -4.409542e-002, -3.720914e-002, -2.408632e-002, -8.559013e-003, 4.980587e-003, 1.002012e-002, 8.503398e-003, 2.091227e-002, 1.963864e-002, 1.601786e-002, 2.769635e-002, 1.768088e-002, 6.229100e-003, 7.686096e-003, 5.411460e-003, 7.161431e-003, 2.577353e-002, -5.215090e-002, 2.149917e-002, -4.899654e-004, -9.855344e-003, -7.849726e-004, -2.808358e-002, 9.590725e-003, 9.559503e-003, -5.576553e-003, 2.454930e-002, 3.664613e-002, 2.373065e-002, 1.198653e-002, 8.222294e-003, -1.349092e-003, -1.590154e-002, -2.301371e-002, -1.816363e-002, -7.131262e-003, 9.667110e-003, 1.850277e-002, 3.934069e-002, 2.773801e-002, -3.639746e-003, -6.438825e-003, 2.779892e-002, 3.239636e-002, 6.077759e-003, -3.461701e-002, -4.358662e-002, -3.236812e-002, -1.641202e-002, 9.885099e-004, 1.385172e-002, 1.892525e-002, 1.986927e-002, 2.327639e-002, 1.671601e-002, 1.000256e-002, 2.603892e-002, 1.021702e-002, -4.407580e-003, 8.132040e-003, 8.811392e-003, 1.421412e-002, 2.121472e-002, -4.423819e-002, 2.055854e-002, -5.071957e-004, -1.066860e-002, -9.887844e-004, -3.066857e-002, -2.603702e-003, 1.642083e-002, 4.145946e-003, 1.838301e-002, 3.239675e-002, 1.838456e-002, 4.640501e-003, -1.062148e-003, -1.049452e-002, -2.443917e-002, -2.889975e-002, -2.191107e-002, -1.086065e-002, -1.099740e-002, -4.195883e-003, 4.354046e-002, 4.483961e-002, 9.031559e-003, -3.351505e-003, 1.540532e-002, 1.800157e-002, 6.300987e-003, -2.313367e-002, -4.306807e-002, -3.325081e-002, -1.334351e-002, 3.735390e-003, 1.478032e-002, 1.779893e-002, 1.788923e-002, 1.860301e-002, 9.724151e-003, 1.778521e-003, 1.214034e-002, 2.654716e-003, -8.936392e-003, 8.531259e-003, 1.264227e-002, 5.386711e-003, 1.583383e-002, -4.065801e-002, 1.482107e-002, 7.470130e-004, -9.957033e-003, 4.767422e-003, -1.469151e-002, -9.904335e-003, 1.822931e-002, 1.417865e-002, 1.660457e-002, 2.722155e-002, 1.562240e-002, 3.029346e-004, -6.404101e-003, -1.397156e-002, -2.196255e-002, -1.782625e-002, -4.825419e-003, -1.013386e-002, -3.332391e-002, -2.076333e-002, 3.461842e-003, 9.527629e-003, 8.122311e-003, -2.513902e-003, -4.662478e-003, -2.959503e-002, -1.868506e-002, 3.037186e-003, -1.529533e-002, -2.808187e-002, -1.750527e-002, -4.871168e-003, 6.207854e-003, 1.057774e-002, 1.464738e-002, 1.561327e-002, 1.952940e-003, -1.493019e-003, 1.393310e-002, 6.299629e-003, 3.223144e-003, 1.198466e-002, 1.982663e-002, 8.462629e-003, 1.902928e-002, -3.655430e-002, 6.495881e-003, -1.588749e-003, -1.189200e-002, 1.333660e-002, -1.296138e-003, -1.503337e-002, 4.078801e-003, 1.531215e-002, 1.376143e-002, 1.566044e-002, 9.906180e-003, -4.216288e-003, -1.332480e-002, -1.406149e-002, -8.051478e-003, 1.132645e-002, 2.114344e-002, 3.668398e-003, -2.388628e-002, -3.925948e-002, -5.063507e-002, -3.282585e-002, -2.152294e-003, -3.374447e-003, -1.529745e-003, -1.957663e-002, -1.351456e-002, 2.221063e-002, 2.837284e-002, 2.664949e-003, -8.360331e-003, -7.843680e-003, 1.109345e-003, 4.666777e-003, 1.103440e-002, 1.092376e-002, -5.598451e-003, 4.416169e-003, 1.175885e-002, 3.755752e-003, 1.667368e-002, 1.678861e-002, 1.715270e-002, 8.830175e-003, 2.361889e-002, -2.720209e-002, -1.690491e-003, -9.618485e-003, -2.088110e-002, 5.572322e-003, 2.057796e-004, -2.574253e-002, -2.137785e-002, 4.735614e-003, 9.294572e-003, 2.376577e-003, 1.388506e-003, -1.138156e-002, -2.137569e-002, -1.371076e-002, 1.522765e-002, 5.006558e-002, 4.567062e-002, 1.664232e-002, -1.065136e-002, -4.034550e-002, -6.641084e-002, -5.478217e-002, -2.831355e-002, -4.017168e-002, -4.676378e-002, -3.981441e-002, -1.890283e-002, 2.189713e-002, 4.903534e-002, 4.200943e-002, 8.814621e-003, -8.408029e-003, -4.514473e-003, -1.174563e-003, 8.678485e-003, 5.939916e-003, -6.972174e-003, 5.632631e-004, 5.332237e-003, 4.107081e-003, 1.104755e-002, -9.511564e-004, 3.248354e-003, 1.013005e-002, 2.837785e-002, -1.044380e-002, 2.992023e-003, -1.236736e-002, -2.741397e-002, -9.524186e-003, -5.966319e-003, -3.204917e-002, -3.199760e-002, -1.427345e-003, 7.974719e-003, -5.330441e-003, -1.076616e-002, -1.927245e-002, -2.679898e-002, -7.901895e-003, 3.862768e-002, 7.224472e-002, 6.358040e-002, 3.703316e-002, 6.905845e-003, -1.571100e-002, -3.176447e-002, -2.456069e-002, -1.932740e-002, -3.420632e-002, -3.608305e-002, -3.173598e-002, -1.670704e-002, 1.330031e-002, 4.713826e-002, 6.319106e-002, 3.271002e-002, -1.747270e-003, -3.847017e-003, -1.784586e-003, 7.440029e-003, 3.608012e-003, -1.094995e-002, -9.251253e-004, 8.959667e-003, 7.346325e-003, -1.111252e-002, -2.891046e-002, -6.829757e-003, 2.031550e-002, 2.517210e-002, 6.422726e-003, 1.972472e-002, -6.002727e-003, -2.317286e-002, -1.108890e-002, 1.607908e-003, -2.224788e-002, -2.068992e-002, -9.363147e-003, 5.664615e-003, -7.871525e-003, -1.700709e-002, -2.064398e-002, -2.131368e-002, 4.293289e-003, 4.411006e-002, 6.977014e-002, 6.460728e-002, 4.276117e-002, 6.360956e-003, -1.725825e-002, -8.407784e-003, 1.683896e-002, 1.832569e-002, 8.664018e-003, 4.742693e-003, 5.093943e-003, 1.086480e-002, 2.420430e-002, 3.974233e-002, 5.212016e-002, 3.792974e-002, 1.181908e-002, 2.656473e-004, 2.099434e-003, 9.556186e-003, 3.173899e-003, -1.427473e-002, 8.561795e-004, 4.511366e-003, -6.964101e-003, -2.234453e-002, -2.203344e-002, 7.746190e-006, 2.014196e-002, 1.126477e-002, 4.080335e-002, 3.953818e-002, 8.204680e-003, -1.235615e-002, -8.672914e-003, 6.046942e-003, -6.291504e-003, 6.959425e-003, -3.090778e-003, 5.427018e-003, -3.539981e-003, -1.415621e-002, -


--`,,```,,,,````-`-`,,`,,`,`,,`---
© ISO/IEC 2004 — All rights reserved

Copyright International Organization for Standardization
Provided by IHS under license with ISO
No reproduction or networking permitted without license from IHS
Not for Resale

1.503968e-002, -7.457706e-003, 8.119255e-003, 2.603250e-002, 2.682982e-002, 1.929451e-002, -3.452749e-003, -2.712840e-002, -3.262161e-002, -2.441395e-002, -9.059841e-003, -4.386340e-003, -6.959009e-003, -9.578422e-003, -8.373966e-003, 3.091370e-003, 1.392280e-002, 1.922664e-002, 2.373820e-002, 1.443980e-002, 1.079072e-002, 5.728322e-003, 1.036624e-002, 7.487932e-003, 2.340519e-003, -5.788401e-003, 7.990365e-003, 3.694954e-003, -1.446339e-002, -9.755420e-003, -2.855232e-003, 7.534891e-003, 6.819154e-003, -1.146903e-002, 4.929090e-002, 4.336360e-002, 1.492083e-002, -2.116874e-003, 2.584017e-003, 1.042304e-002, 1.673338e-002, 2.957929e-002, 7.912773e-003, 3.717472e-003, 1.603341e-003, -4.426445e-003, -5.121501e-003, 3.310013e-003, 7.068402e-003, 1.087142e-003, -1.644038e-002, -1.584353e-002, -1.166992e-002, -3.450625e-003, 4.546190e-003, 3.079545e-003, 1.779770e-002, 2.307773e-002, 2.279090e-002, 9.882374e-003, -7.139906e-003, -1.186598e-002, -8.108893e-003, 2.321483e-004, -1.915631e-004, 1.018081e-003, 6.899655e-003, 1.237846e-002, 1.581737e-002, 6.169090e-003, 3.983715e-003, 6.957891e-003, 1.989820e-002, 6.009328e-003, 4.771828e-003, 1.595461e-002, 5.551418e-003, 3.003476e-003, 4.775027e-003, -2.536334e-002, 3.604875e-002, 4.280280e-002, 1.625917e-002, 4.114711e-003, 8.854465e-003, 5.810811e-003, 1.802439e-002, 3.655083e-002, 1.615801e-002, -6.680422e-003, 4.284281e-003, 1.432131e-003, 3.675729e-003, 1.017179e-002, 9.656123e-003, -1.708915e-003, -1.198823e-002, -1.456138e-002, -1.120202e-002, -1.862349e-002, -2.677867e-002, -2.013135e-002, -3.109815e-003, 1.081610e-003, 9.414801e-003, 3.306782e-003, 1.278532e-004, -2.138008e-003, -4.964713e-003, -1.832894e-003, 1.267796e-003, 6.852555e-003, 1.006270e-002, 1.827723e-002, 2.038048e-002, 6.051197e-003, 5.022677e-003, 1.126645e-002, 2.060773e-002, 3.919769e-003, 1.680572e-002, 2.021447e-002, 2.879469e-003, -3.331206e-003, -1.847353e-003, -2.655183e-002, 1.149308e-002, 2.522643e-002, 1.275140e-002, 9.977703e-003, 7.371381e-003, -7.501063e-003, -1.123000e-003, 2.166698e-002, 1.798467e-002, -1.453879e-002, -2.209281e-003, 3.370509e-003, 5.940283e-003, 8.977801e-003, 8.972230e-003, 3.603645e-003, -8.680823e-003, -2.184224e-002, -2.880562e-002, -3.260547e-002, -2.653444e-002, -1.051497e-002, 9.831916e-003, 2.096329e-002, 2.532396e-002, 1.692632e-002, 1.454483e-002, 7.157081e-003, 4.161560e-003, 1.436030e-002, 2.338076e-002, 1.834190e-002, 1.279039e-002, 1.458963e-002, 2.157354e-002, 1.048840e-002, 4.092121e-003, 1.107568e-002, 5.598506e-003, -5.526977e-004, 1.761975e-002, 2.075612e-002, 3.822355e-003, -7.254303e-003, 7.653356e-003, -1.867944e-002, -1.271697e-002, -6.457292e-004, 1.101994e-003, 1.486801e-002, 5.339308e-003, -1.079054e-002, -1.051288e-002, 8.040717e-003, 1.287957e-002, -2.238667e-002, -1.623895e-002, -1.809074e-003, 5.175578e-004, 2.588517e-003, 3.106009e-003, -5.325484e-003, -1.914581e-002, -4.052007e-002, -4.683328e-002, -4.283149e-002, -3.399123e-002, -1.102054e-002, 1.375425e-002, 2.268517e-002, 2.070708e-002, 8.631647e-003, -1.130686e-002, -3.402498e-002, -4.144878e-002, -1.918735e-002, 7.829485e-003, 1.128437e-002, 6.611829e-003, 3.795322e-003, 1.662663e-002, 1.810860e-002, 6.189434e-003, 3.970952e-003, -1.045724e-002, -3.952556e-003, 1.708232e-002, 1.829267e-002, 1.065659e-002, 1.599032e-003, 1.654559e-002, -8.807816e-003, -3.361847e-002, -1.902520e-002, -1.568447e-002, 1.247057e-002, 1.033419e-002, -8.518845e-003, -1.661644e-002, -4.969053e-003, 2.090437e-004, -2.847748e-002, -2.798720e-002, -5.490323e-003, -7.457445e-003, -8.791486e-003, -6.510586e-003, -7.198827e-003, -1.725045e-002, -3.630586e-002, -3.959755e-002, -2.467223e-002, -4.908518e-003, 1.780184e-002, 3.370814e-002, 3.696927e-002, 2.896494e-002, 4.516976e-003, -2.700156e-002, -5.465737e-002, -6.486108e-002, -5.104198e-002, -2.476853e-002, -5.225516e-003, -6.684085e-003, -4.563549e-003, 1.387620e-002, 1.950887e-002, 1.616333e-002, -2.544683e-004, -1.390068e-002, -1.216686e-003, 2.159449e-003, 1.997163e-003, 1.373506e-002, 5.628585e-003, 1.966012e-002, -3.398862e-003, -4.128597e-002, -2.877102e-002, -2.136124e-002, 3.345293e-003, 1.652431e-002, -5.987501e-004, -1.258082e-002, -7.298526e-003, 1.343476e-003, -1.589708e-002, -2.364713e-002, -9.060635e-005, -1.441614e-002, -2.574008e-002, -2.402665e-002, -2.121143e-002, -2.098107e-002, -2.398355e-002, -1.897411e-002, 2.360972e-003, 2.963416e-002, 5.307350e-002, 6.170251e-002, 6.190518e-002, 5.036314e-002, 2.362170e-002, -1.462456e-002, -4.749203e-002, -5.923696e-002, -5.038763e-002, -3.069277e-002, -1.726086e-002, -2.178483e-002, -1.034665e-002, 1.432425e-002, 3.027117e-002, 2.384229e-002, -2.946742e-003, -7.414217e-003, -8.572460e-003, -1.133776e-002, -5.746034e-003, 3.649254e-003, 5.122880e-003, 2.031031e-002, -7.638032e-003, -3.669254e-002, -2.394732e-002, -1.887771e-002, -3.001758e-003, 9.334256e-003, 6.518889e-003, -1.211674e-003, 4.696827e-003, 7.684681e-003, 2.185907e-003, 2.620067e-003, 2.144639e-002, -5.457747e-003, -2.966554e-002, -3.508995e-002, -3.430147e-002, -3.013013e-002, -2.677082e-002, -2.258340e-002, -3.344603e-004, 2.380881e-002, 4.063264e-002, 4.717974e-002, 4.534298e-002, 3.803878e-002, 1.791529e-002, -1.116194e-002, -3.799239e-002, -4.526582e-002, -3.984391e-002, -2.966136e-002, -2.702024e-002, -3.035518e-002, -1.469032e-002, 1.257527e-002, 3.071990e-002, 1.049402e-002, -1.362773e-003, 3.816097e-003, -9.960836e-003, -8.928475e-003, -4.735870e-003, -1.240505e-002, -4.704906e-003, 1.194532e-002, -1.173903e-002, -2.482723e-002, -7.254526e-003, -1.226451e-002, -1.068781e-002, -5.142288e-003, 3.913461e-003, 9.195332e-003, 1.798305e-002, 1.205873e-002, 5.965936e-003, 2.004114e-002, 3.027572e-002, 9.959778e-003, -1.818880e-002, -2.925891e-002, -3.360901e-002, -3.327330e-002, -3.248850e-002, -2.876456e-002, -1.596440e-002, 4.513911e-003, 1.826079e-002, 2.362773e-002, 2.231052e-002, 1.897494e-002, 3.560131e-003, -1.468457e-002, -2.799465e-002, -

© ISO/IEC 2004 — All rights reserved


Copyright International Organization for Standardization
Provided by IHS under license with ISO
No reproduction or networking permitted without license from IHS
Not for Resale

2.830597e-002, -2.661302e-002, -2.569791e-002, -2.635577e-002, -3.135246e-002, -1.407584e-002, 9.817613e-003, 1.457860e-002, -1.067173e-002, -3.635441e-003, 1.879703e-003, -1.547571e-002, -4.360263e-003, -2.499241e-003, -1.578338e-002, -1.928730e-002, -2.293668e-003, -1.964543e-002, 3.629341e-003, 2.371978e-002, -1.783417e-003, -2.168889e-002, -1.004122e-002, 1.071491e-004, 1.937428e-002, 1.778457e-002, 1.270430e-002, 7.889115e-003, 1.947464e-002, 1.956509e-002, 9.391004e-003, -3.273577e-003, -1.017629e-002, -8.272837e-003, -9.886231e-003, -1.983666e-002, -2.341165e-002, -1.613449e-002, -5.365567e-003, 1.272647e-002, 2.969024e-002, 3.146149e-002, 2.842395e-002, 1.650159e-002, 3.785610e-003, -6.373222e-003, -1.162598e-002, -1.506957e-002, -1.419340e-002, -1.651316e-002, -1.535278e-002, -6.844343e-003, 9.674999e-004, 6.917473e-004, -1.764456e-002, -6.629120e-003, -8.851792e-003, -1.406685e-002, 6.798553e-003, 6.085596e-003, -9.749958e-003, -1.890501e-002, 1.658018e-003, -2.221218e-002, 3.083955e-002, 4.110985e-002, -5.073303e-005, -3.007133e-002, -1.136240e-002, 8.482300e-003, 1.898939e-002, 1.562966e-002, 1.575729e-002, 8.097438e-003, 2.138833e-002, 7.595700e-003, -4.629021e-003, -8.802158e-004, 5.754802e-003, 1.755780e-002, 2.608451e-002, 1.037029e-002, -3.089597e-003, -3.063430e-003, 5.208729e-003, 2.382680e-002, 4.501545e-002, 4.965501e-002, 4.693279e-002, 3.892033e-002, 2.499783e-002, 8.011973e-003, 1.907808e-003, -6.095561e-003, -3.751721e-003, -7.470020e-003, -3.882547e-003, -7.308987e-003, -9.631432e-003, 6.059019e-003, -2.666762e-004, 3.264665e-003, -3.902009e-003, -2.215522e-003, 1.889335e-002, 1.253183e-002, -9.908396e-003, -1.618219e-002, 1.701443e-002, -9.850389e-003, 1.233526e-002, 1.652186e-002, -1.709295e-002, -4.078941e-002, -1.665344e-002, -7.729569e-004, -8.123768e-004, -2.548407e-003, -1.790185e-002, -1.609412e-002, -6.161301e-003, -2.736440e-002, -3.294939e-002, -3.029054e-002, -2.249990e-002, -5.252479e-003, 1.237985e-002, 2.631014e-003, -9.298840e-003, -6.453563e-003, -2.745861e-003, 1.308576e-002, 2.636965e-002, 3.168769e-002, 3.243880e-002, 2.636924e-002, 9.523111e-003, -7.067529e-003, -1.096067e-002, -1.212873e-002, -5.380091e-003, -4.242551e-003, -8.934550e-003, -2.587186e-002, -1.753146e-002, 6.745743e-003, 4.394243e-003, 5.613387e-003, 4.667641e-003, -2.398112e-003, 1.836364e-002, 1.295575e-002, -1.444754e-002, -1.153863e-002, 2.112746e-002, -2.771901e-004, 3.631573e-003, 9.306222e-003, -3.470772e-003, -6.557184e-003, 1.244702e-002, 1.355080e-002, 1.341104e-002, 1.617072e-003, -1.444720e-002, 4.719478e-003, 5.369308e-003, -1.142336e-002, -2.516125e-002, -2.227015e-002, -1.643488e-002, -1.281762e-002, 4.494193e-003, 1.707040e-002, 9.023079e-003, 1.012327e-002, 1.794025e-002, 2.737078e-002, 3.586126e-002, 3.690024e-002, 3.294483e-002, 2.229489e-002, 7.535905e-003, -7.413887e-003, -1.323683e-002, -7.532691e-003, 3.041422e-003, 5.791312e-004, -1.490275e-002, -2.891018e-002, -4.763668e-003, 2.119544e-002, 1.867058e-003, 2.437937e-003, 4.946090e-003, 9.895070e-003, 1.864932e-002, 4.163526e-003, -2.869403e-002, -2.635925e-002, -1.992909e-004, -1.454721e-002, -1.150091e-002, 4.088676e-003, 1.115537e-002, 1.000304e-002, 2.542023e-002, 2.655637e-002, 1.906815e-002, 1.160352e-002, 6.573604e-003, 1.828017e-002, 2.287920e-002, -2.067420e-003, -5.949682e-003, -1.222697e-002, -7.522512e-003, -1.127136e-002, -1.669587e-002, 5.281247e-004, -2.635243e-003, 5.517333e-004, 7.535218e-003, 1.620453e-002, 1.617554e-002, 9.749535e-003, -7.770029e-005, -8.892915e-003, -1.519822e-002, -1.609264e-002, -4.783755e-003, 4.611908e-003, 1.383662e-002, 2.551755e-003, -1.525430e-002, -8.938864e-003, 1.300016e-002, 2.821905e-002, 1.074865e-002, -2.712086e-003, -3.798293e-003, 1.834513e-002, 3.423307e-002, 8.431457e-003, -1.881833e-002, -9.610436e-003, 1.322958e-002, 2.519680e-003, -2.881719e-002, -7.168376e-003, 1.107632e-002, 1.723007e-002, 1.639256e-002, 2.460034e-003, 4.994310e-003, 1.464456e-002, -1.147994e-002, -4.696840e-003, 1.279445e-002, -5.835842e-003, 4.185219e-004, 3.396352e-003, 1.109128e-002, 7.723651e-003, -7.486022e-003, -1.176671e-002, -1.005730e-002, -1.107389e-002, -5.852509e-003, -1.076453e-003, -3.734050e-004, -5.229179e-003, -1.103958e-002, -1.407389e-002, -1.321045e-002, -3.904781e-003, 6.561074e-003, 9.491252e-003, 1.697277e-003, -5.979470e-003, -9.938652e-003, 5.770062e-003, 1.086195e-002, 4.261296e-003, 9.888334e-003, 1.132300e-002, -7.769810e-003, -5.281789e-003, 1.473212e-002, 1.321643e-002, -5.093655e-003, -7.425438e-003, 1.797351e-002, 1.714416e-002, -1.856865e-002, 5.688202e-003, 2.640260e-002, 1.374931e-002, -1.510374e-003, -2.327318e-002, -6.263492e-003, -1.310350e-004, -2.487627e-002, -1.876594e-002, 2.840842e-003, -1.088248e-002, -6.386829e-003, 5.496390e-003, 1.566014e-002, 1.661664e-002, 2.995678e-003, -1.426556e-002, -1.576107e-002, -1.280049e-002, -1.070216e-002, -7.409179e-003, -4.332250e-003, -3.499646e-003, -3.671528e-003, -3.251895e-003, -2.883471e-003, 1.320258e-003, 2.847130e-003, -3.942027e-003, -1.598643e-002, -1.587827e-002, -6.747671e-003, 5.062886e-003, -5.434644e-003, -1.444832e-002, 6.469906e-003, 1.548724e-002, -9.282542e-003, -1.428691e-002, -5.625243e-003, -3.896704e-003, -3.893030e-003, 6.407668e-003, 1.736050e-002, 1.245053e-002, -8.111288e-003, 5.399499e-003, 7.039379e-003, -5.366534e-003, -2.403468e-002, -2.452229e-002, 1.831440e-002, 1.490503e-002, -1.704073e-002, -1.074634e-002, 1.683900e-003, -1.885644e-003, 7.421312e-004, 1.201175e-002, 1.192122e-002, 1.689084e-002, 1.162211e-002, -4.803174e-004, -8.591895e-003, -7.249170e-003, 3.351451e-004, 5.415185e-003, 9.853923e-003, 1.343112e-002, 1.132302e-002, 5.424189e-003, 3.106464e-003, 3.044038e-003, -3.163651e-003, -1.331844e-002, -1.493609e-002, -6.829258e-003, 6.340634e-003, 1.859987e-003, -1.923438e-002, -2.191774e-002, 4.872081e-003, 1.070780e-002, -5.670205e-003, 1.141756e-003, 1.309515e-002, 1.055028e-002, 7.987019e-003, 2.176235e-002,


© ISO/IEC 2004 — All rights reserved

Copyright International Organization for Standardization
Provided by IHS under license with ISO
No reproduction or networking permitted without license from IHS
Not for Resale

2.016780e-002, 5.527639e-003, -4.674548e-002, -3.903658e-002, -3.737866e-002, -3.838304e-002, -3.468020e-002, -7.234601e-003, 2.759543e-002, 1.295405e-002, -1.740789e-002, -1.325293e-002, 3.579271e-003, -7.662231e-003, 7.581314e-004, 1.548204e-002, 1.714308e-002, 2.213380e-002, 2.104438e-002, 8.393534e-003, -3.622299e-003, -6.652103e-003, 1.138578e-003, 8.542345e-003, 1.407658e-002, 1.918380e-002, 2.020619e-002, 1.527457e-002, 1.038348e-002, 8.716592e-003, -1.114954e-003, -9.265233e-003, -2.725062e-003, 1.264190e-002, 2.039253e-002, -2.547979e-002, -3.330548e-002, -4.157296e-002, -2.123764e-002, -2.578383e-002, -3.457926e-002, -1.127407e-002, 4.527738e-003, 3.982640e-003, -4.510102e-003, -1.314816e-002, -1.800531e-002, -4.165632e-002},
{2.582425e-002, -4.692805e-003, -1.386933e-002, -9.444025e-003, -4.621083e-003, 3.891942e-004, -1.391943e-002, -1.447807e-002, -6.328110e-003, -1.174020e-002, -2.171465e-002, -1.089388e-002, 1.062650e-002, 2.093370e-002, 1.469021e-002, -5.806812e-005, -1.410587e-002, -1.898373e-002, -2.027458e-002, -1.139098e-002, -3.918310e-003, 4.179838e-003, 6.364857e-003, 9.434202e-003, 9.626538e-003, 1.202337e-002, 1.035783e-002, 9.223867e-003, 8.698254e-003, 5.814350e-003, 2.269130e-003, -1.681453e-003, -1.046486e-002, -4.115671e-003, 5.402651e-003, 1.484316e-002, 3.138090e-002, 3.955070e-002, 4.041230e-002, 2.353879e-002, -1.548694e-003, 7.703738e-003, 2.039721e-002, -2.873468e-003, -6.933138e-003, -4.691792e-004, -5.909953e-003, -3.716737e-002, -3.766462e-002, -2.458561e-002, -5.392849e-003, -1.100181e-002, -3.030284e-002, -2.337229e-002, -1.513809e-002, -2.365632e-002, -1.950956e-002, 1.429683e-003, 1.501704e-002, 8.741507e-003, -8.208418e-003, -1.585507e-002, -1.395875e-002, -8.386214e-003, -8.800683e-003, 7.321677e-005, 3.993271e-003, 1.631434e-003, -1.545741e-003, -4.148755e-003, -6.820432e-003, -1.042160e-002, -1.181961e-002, -1.057704e-002, -9.746694e-003, -1.355429e-002, -1.869379e-002, -1.835424e-002, -1.577296e-002, -1.723926e-002, -1.894761e-002, -9.292916e-003, -2.150885e-003, 1.460332e-002, 2.266494e-002, 2.235349e-002, -7.740479e-003, -2.113463e-002, -2.850208e-003, -7.468160e-005, -7.329525e-003, -1.123663e-002, 5.080563e-003, -2.592485e-002, -1.851286e-002, 4.519988e-003, 1.287137e-002, -7.765315e-003, -4.859352e-003, 5.793461e-003, 3.158295e-003, 5.359530e-003, 1.321121e-002, 1.437469e-002, 8.003227e-003, 6.750031e-003, 1.577129e-002, 1.854403e-002, 1.785053e-002, 1.053092e-002, 1.798151e-003, 1.512016e-003, 7.990918e-004, -2.333267e-003, -3.577173e-003, 2.440387e-004, 3.096074e-003, 2.045862e-004, -8.038745e-003, -1.139146e-002, -2.835811e-003, 8.521738e-004, -3.715293e-003, -6.548398e-003, 3.708052e-004, 1.036082e-002, 1.000316e-002, -4.834964e-004, -7.482300e-004, 3.808698e-003, 1.560113e-002, 2.333673e-002, 2.157934e-002, -1.568949e-002, -1.029907e-002, 6.075895e-003, -1.784465e-003, -1.150208e-002, 9.864625e-003, -2.240153e-002, -3.391437e-003, 1.329156e-002, -4.276515e-003, -9.127272e-003, 1.153278e-003, 6.664572e-003, 3.785958e-003, -1.709887e-003, -8.952116e-003, -1.152737e-002, -1.659814e-003, 1.358138e-002, 2.318531e-002, 2.539091e-002, 1.539864e-002, 3.025911e-003, -8.748697e-003, -1.113314e-002, -1.067577e-002, -1.069010e-002, -2.943158e-003, 6.516627e-003, 1.236585e-002, 6.584157e-003, -2.025050e-003, -1.064785e-002, -1.556294e-002, -9.593810e-003, -4.148303e-005, -3.461340e-003, -4.048737e-004, 6.049566e-003, 1.494953e-002, 8.007700e-003, 6.953075e-003, 1.105095e-002, 1.265592e-002, 1.485743e-002, 2.656356e-002, 1.041130e-002, -8.430578e-003, 9.860380e-003, 6.720770e-003, -4.666905e-003, 2.283837e-002, -1.051696e-002, 1.816131e-002, 1.073334e-002, -1.163907e-002, -4.585423e-003, -2.045793e-003, 1.010250e-003, -1.957070e-002, -3.681115e-002, -3.731353e-002, -1.449353e-002, 4.351650e-003, 1.139838e-002, 1.370612e-002, 1.584640e-002, 7.776539e-003, -3.615684e-003, -1.159541e-002, -1.589489e-002, -1.579059e-002, -1.318500e-002, -1.813468e-003, 8.988870e-003, 1.880762e-002, 1.607035e-002, 7.151571e-003, -4.603534e-003, -1.637138e-002, -1.836656e-002, -6.752752e-003, 2.099988e-003, 3.743484e-003, 8.582052e-003, 1.225582e-002, 1.150185e-002, 4.372461e-003, 1.659161e-002, 2.478674e-002, 1.269617e-002, 1.669879e-002, 2.717713e-002, 6.069064e-004, 3.972567e-003, 7.562192e-003, 3.620439e-004, 2.807890e-002, -1.671809e-003, 1.822341e-002, -3.476033e-003, -2.242096e-002, -8.348697e-003, -2.780150e-003, -2.176316e-002, -4.351682e-002, -4.302394e-002, -1.681268e-002, -4.070454e-003, 6.550681e-004, 4.991999e-003, 8.375628e-003, 1.772936e-002, 1.704008e-002, 6.032238e-003, -8.947868e-003, -2.319680e-002, -3.557271e-002, -3.814026e-002, -2.309288e-002, -2.001409e-003, 1.105584e-002, 4.335876e-003, -2.155049e-003, -8.598343e-003, -1.685071e-002, -2.260785e-002, -1.476461e-002, -2.312129e-003, 4.425314e-003, -2.029697e-003, -1.975710e-003, -6.530180e-004, -7.911578e-003, -2.004420e-003, 1.964142e-002, 1.619915e-002, -5.566379e-003, 5.448469e-003, 7.993668e-003, 7.177308e-003, 7.144939e-003, 1.252969e-002, 3.186048e-002, -1.714834e-003, 1.663016e-002, -7.341548e-003, -1.863347e-002, -5.542846e-003, -8.299647e-003, -2.857382e-002, -3.338367e-002, -1.633992e-002, -9.920236e-003, -1.323878e-002, -1.100827e-002, 2.833355e-003, 2.011002e-002, 3.507738e-002, 3.435212e-002, 2.301343e-002, -4.722621e-003, -3.343197e-002, -5.274484e-002, -5.563944e-002, -4.291703e-002, -1.302929e-002, 5.346204e-003, -5.001901e-004, -8.449511e-003, -1.582298e-002, -2.052450e-002, -1.803006e-002, -1.261659e-002, -2.852388e-003, 6.082568e-003, 6.210079e-003, -7.714925e-003, -9.468546e-003, -1.270250e-002, -1.610255e-002, 2.123466e-003, 2.072920e-002, -4.449062e-003, -3.098273e-002, -7.326416e-003, 4.798363e-003, -3.285473e-003, 5.665519e-003, 2.604256e-002, -9.744614e-003, 8.937568e-003, -2.797015e-003, -8.204848e-003, -8.496314e-004, -5.964120e-003, -1.619249e-002, -4.676755e-003, -7.984511e-003, -1.911295e-002, -1.944859e-002, -8.643718e-003, 1.285820e-002,

© ISO/IEC 2004 — All rights reserved


Copyright International Organization for Standardization
Provided by IHS under license with ISO
No reproduction or networking permitted without license from IHS
Not for Resale

3.450720e-002, 5.095377e-002, 5.968233e-002, 4.693301e-002, 2.331567e-002, -7.053545e-003, -2.970409e-002, -3.390891e-002, -2.003085e-002, 8.911457e-003, 3.103097e-002, 2.763718e-002, 1.869381e-002, 8.626409e-003, 3.771256e-003, 2.137359e-003, 6.289199e-003, 1.401263e-002, 2.357451e-002, 1.788390e-002, 4.801822e-004, -1.311743e-002, -1.692584e-002, -1.928963e-002, -1.304049e-002, 9.864478e-003, 1.054983e-002, -3.681478e-002, -3.448715e-002, -1.334530e-002, -1.216919e-002, -2.483048e-003, 1.483370e-002, -1.714932e-002, 7.583432e-003, 6.700060e-003, -3.274585e-003, 8.539677e-003, 5.518201e-003, 7.166339e-003, 8.128682e-003, -1.709954e-002, -2.300506e-002, -1.271741e-002, -6.694298e-004, 1.178949e-002, 2.816466e-002, 4.528127e-002, 6.257618e-002, 6.041359e-002, 5.234828e-002, 2.546755e-002, 2.892756e-003, -3.304682e-003, 1.014509e-002, 3.589102e-002, 5.418596e-002, 5.114230e-002, 4.370178e-002, 3.516197e-002, 2.526242e-002, 2.478417e-002, 2.233264e-002, 2.354573e-002, 2.983089e-002, 3.398365e-002, 1.704227e-002, -9.182387e-003, -1.256260e-002, -5.849237e-003, -1.427034e-002, -6.994077e-003, 1.609009e-002, -1.662667e-002, -4.529382e-002, -2.943884e-002, -1.744223e-002, -6.250377e-003, 3.372673e-003, -1.961077e-002, 1.869087e-002, 1.098356e-002, -1.896799e-003, 1.304147e-002, 2.053955e-002, 1.668871e-002, -9.759798e-004, -1.728430e-002, -1.240423e-002, -5.025339e-003, -1.313438e-002, -1.179099e-002, -5.460906e-003, 6.602574e-003, 1.927080e-002, 3.200206e-002, 3.277531e-002, 1.896909e-002, 4.073712e-003, 2.120715e-003, 1.490672e-002, 3.624236e-002, 5.156875e-002, 4.540202e-002, 3.611690e-002, 2.903673e-002, 1.546115e-002, 1.159874e-002, 1.269329e-002, 1.756786e-002, 1.996269e-002, 2.485533e-002, 2.487165e-002, 7.039509e-003, -9.334557e-003, -1.872347e-003, -9.045605e-004, -1.518275e-002, 2.214358e-003, -2.779110e-003, -3.795367e-002, -3.380513e-002, -2.702975e-003, -1.804902e-002, -1.011633e-003, 1.710801e-002, 2.480070e-002, 7.920194e-003, 8.528323e-004, 1.769210e-002, 2.629654e-002, 1.264173e-002, -5.001499e-003, -9.894438e-003, -9.111515e-003, -1.558257e-002, -3.380521e-002, -4.153442e-002, -4.432314e-002, -3.938697e-002, -2.622968e-002, -1.681033e-002, -1.186070e-002, -1.978960e-002, -2.222705e-002, -1.530477e-002, -1.000207e-003, 1.687320e-002, 2.080647e-002, 1.287538e-002, 3.388636e-003, -4.161160e-003, -1.546776e-002, -1.796155e-002, -1.148604e-002, -3.821173e-004, 6.985254e-003, 7.322402e-003, 1.053664e-002, 1.190659e-002, 8.255372e-003, 3.833293e-003, 8.211466e-003, -4.562398e-003, -1.115134e-002, -1.246907e-003, -1.746236e-002, -2.587797e-002, -2.117261e-003, -2.267983e-002, -8.279521e-003, 2.258429e-002, 2.025964e-002, -5.224958e-004, 9.940887e-004, 2.139201e-002, 1.517888e-002, 3.052712e-003, -5.747919e-003, -8.292654e-003, -1.458913e-002, -3.317664e-002, -5.072176e-002, -5.821856e-002, -5.719966e-002, -5.377632e-002, -4.825632e-002, -4.412441e-002, -3.906055e-002, -4.166687e-002, -4.351443e-002, -3.397909e-002, -2.322758e-002, -7.966315e-003, -9.520102e-003, -2.297951e-002, -3.452563e-002, -4.194414e-002, -4.744988e-002, -4.495619e-002, -3.077393e-002, -9.447041e-003, 2.662391e-003, -4.538724e-003, -6.195935e-003, 4.490618e-003, 1.510023e-002, 1.352290e-002, 1.655054e-002, 7.785483e-003, -7.679833e-003, -4.463818e-003, -5.421870e-005, -4.746691e-003, 9.788413e-003, -1.481329e-002, -1.447675e-002, 1.980773e-002, 6.349346e-003, -1.579952e-002, -4.411217e-003, 1.245061e-002, -4.277197e-003, -3.930495e-003, -5.193548e-003, -8.807343e-003, -1.888361e-002, -3.474565e-002, -4.255496e-002, -4.545333e-002, -4.107360e-002, -3.664832e-002, -3.591340e-002, -3.207300e-002, -2.644894e-002, -2.856038e-002, -3.298822e-002, -2.753396e-002, -2.217602e-002, -1.653586e-002, -2.409926e-002, -3.539823e-002, -4.924115e-002, -5.355521e-002, -5.409421e-002, -5.272263e-002, -3.888131e-002, -1.727028e-002, 3.014818e-003, 2.042504e-003, -1.082375e-002, -1.385889e-002, 9.885475e-003, 2.195593e-002, 1.880448e-002, 1.512198e-002, 3.560607e-004, -4.900516e-003, 5.799388e-004, 1.441350e-002, 2.521459e-002, -1.044476e-002, -1.257780e-002, 1.944475e-002, -8.902124e-004, -2.846071e-002, -1.073018e-002, -6.811375e-003, -1.462182e-002, -6.020989e-003, -3.535623e-003, 1.893584e-003, -1.010496e-002, -1.835366e-002, -1.876762e-002, -1.704594e-002, -1.163449e-002, -9.928765e-003, -9.932818e-003, -4.865248e-003, 1.165613e-003, 1.401488e-004, -3.077138e-003, 2.664460e-003, 3.324965e-003, 5.784110e-004, -7.432907e-003, -2.039522e-002, -3.011558e-002, -3.831823e-002, -3.632973e-002, -3.102693e-002, -1.941879e-002, -6.003214e-003, 1.212184e-002, 1.398326e-002, 3.029153e-003, -1.427138e-002, -5.958981e-003, 1.898573e-002, 1.504963e-002, 1.759045e-002, 3.085965e-003, -4.878029e-004, 1.843518e-004, 1.703945e-002, 3.572771e-002, -5.390651e-003, -4.587375e-003, 1.976936e-002, -7.890793e-004, -2.900348e-002, -1.404593e-002, -1.700109e-002, -1.996962e-002, -4.496782e-003, 9.941357e-003, 1.260836e-002, 5.545534e-003, 8.355594e-003, 9.331058e-003, 1.147968e-002, 1.549108e-002, 1.722167e-002, 1.862799e-002, 2.111344e-002, 2.491723e-002, 2.492955e-002, 2.142916e-002, 2.674536e-002, 2.791971e-002, 2.384539e-002, 1.889207e-002, 7.797297e-003, -1.707619e-003, -6.467379e-003, -4.509048e-003, 1.909116e-003, 1.192015e-002, 1.762950e-002, 2.801534e-002, 3.018024e-002, 2.003536e-002, -3.431633e-004, -1.401216e-002, 8.350571e-003, 7.978999e-003, 4.439590e-003, -2.372108e-003, -1.840562e-003, -2.399574e-003, 1.143718e-002, 3.728104e-002, -4.670878e-003, 4.015137e-003, 2.007834e-002, 6.732760e-003, -1.371890e-002, -1.085282e-002, -1.784998e-002, -1.466698e-002, 5.806043e-003, 2.158387e-002, 2.401868e-002, 2.113803e-002, 2.747888e-002, 2.688183e-002, 2.925103e-002, 3.027343e-002, 2.973153e-002, 2.871636e-002, 2.911888e-002, 3.472376e-002, 3.594712e-002, 3.512162e-002, 3.962032e-002, 4.082221e-002, 3.725305e-002, 3.155645e-002, 2.021298e-002, 1.206849e-002, 9.709928e-003, 1.432443e-002, 1.975830e-002,


© ISO/IEC 2004 — All rights reserved

Copyright International Organization for Standardization
Provided by IHS under license with ISO
No reproduction or networking permitted without license from IHS
Not for Resale

2.622429e-002, 3.148170e-002, 3.875596e-002, 4.231832e-002, 3.330548e-002, 1.346473e-002, -6.286493e-003, 6.140770e-004, -1.864426e-003, -1.124361e-002, -1.275200e-002, -5.402785e-003, 2.371653e-003, 5.455223e-003, 3.106161e-002, -2.283972e-003, 1.195362e-002, 2.162844e-002, 1.193533e-002, 6.878759e-003, 1.137826e-003, -1.511038e-002, -4.094981e-003, 1.692627e-002, 2.361877e-002, 2.769971e-002, 2.604529e-002, 3.149403e-002, 2.869117e-002, 2.592278e-002, 1.988650e-002, 1.308696e-002, 8.465845e-003, 4.036291e-003, 1.421442e-002, 2.427247e-002, 2.924956e-002, 3.336950e-002, 3.219004e-002, 2.840380e-002, 1.905618e-002, 5.094134e-003, -5.260916e-003, -1.108414e-002, -6.576271e-003, -2.417258e-003, 4.136271e-003, 1.030548e-002, 2.297156e-002, 3.063914e-002, 2.629291e-002, 1.711479e-002, 1.374905e-003, -5.142737e-003, -1.256836e-002, -1.949016e-002, -1.983604e-002, -1.396547e-003, 6.904515e-003, -3.000584e-003, 1.969818e-002, -1.172254e-003, 1.977803e-002, 2.135499e-002, 1.001079e-002, 2.455543e-002, 1.816583e-002, -7.569080e-004, 5.141586e-003, 1.304753e-002, 1.471635e-002, 1.792708e-002, 2.325630e-002, 2.389998e-002, 1.922180e-002, 1.394454e-002, 3.139295e-003, -4.619471e-003, -1.569309e-002, -2.234926e-002, -1.684148e-002, -4.244651e-003, 5.762607e-003, 1.430978e-002, 1.626065e-002, 1.008949e-002, -6.492763e-004, -1.709400e-002, -3.174057e-002, -3.250230e-002, -2.610459e-002, -1.470077e-002, -9.791599e-003, -3.681367e-003, 2.999937e-003, 3.694547e-003, -7.245959e-004, 2.795040e-003, 2.266084e-003, -1.308329e-002, -2.430136e-002, -2.091103e-002, -2.259735e-002, 2.883876e-003, 1.210160e-002, -1.380458e-002, 1.019431e-002, 9.065438e-005, 2.382141e-002, 1.349737e-002, 1.046831e-002, 4.159980e-002, 4.087621e-002, 1.747084e-002, 1.815370e-003, -7.686626e-003, -4.342002e-003, -1.983419e-004, 6.413282e-003, 1.730449e-004, -4.735528e-003, -4.258658e-003, 1.329603e-004, 1.171480e-002, 1.765806e-002, 1.183064e-002, 7.310661e-003, -4.245292e-003, -1.691072e-003, 7.340623e-003, 1.021765e-002, 1.503223e-003, -7.193182e-003, -2.209026e-002, -1.773237e-002, 4.180110e-003, 2.088934e-002, 3.592669e-002, 3.316043e-002, 1.603378e-002, -1.008152e-002, -3.067552e-002, -3.581253e-002, -2.299332e-002, -1.619488e-002, -2.119778e-002, -2.841520e-002, -1.855657e-002, -1.799877e-002, 9.522149e-004, 1.356848e-002, -2.122006e-002, 9.402010e-004, 2.587923e-003, 3.263373e-002, 8.846322e-003, 9.160923e-003, 4.422786e-002, 5.091881e-002, 3.169718e-002, -3.499041e-003, -1.515957e-002, -1.503226e-002, -1.317847e-002, -3.941926e-003, -6.157702e-003, -9.515799e-003, -5.850226e-003, 6.186335e-003, 2.447891e-002, 3.566524e-002, 3.104059e-002, 2.309838e-002, 1.116310e-002, 1.937514e-003, 3.447412e-003, 1.051836e-002, -5.661379e-003, -1.934231e-002, -2.387197e-002, -9.215496e-003, 2.478375e-002, 5.028934e-002, 4.950604e-002, 2.688020e-002, -1.167221e-002, -5.506386e-002, -8.080522e-002, -7.718997e-002, -4.194419e-002, -1.982127e-002, -2.439504e-002, -2.276119e-002, -9.652681e-003, -1.582811e-002, 8.598052e-004, 1.687373e-002, -2.656708e-002, -9.439170e-003, 8.941467e-004, 4.004647e-002, 2.292628e-003, 2.552725e-002, 2.119078e-002, 3.454455e-002, 3.556917e-002, -3.764222e-003, -1.577892e-002, -1.571119e-002, -6.543787e-003, -6.386802e-005, 1.088603e-002, 8.081872e-003, 1.091587e-002, 2.444626e-002, 3.407583e-002, 3.594893e-002, 3.984277e-002, 3.826746e-002, 2.897497e-002, 1.063274e-002, -3.362424e-003, -3.782685e-004, -1.644615e-002, -4.080844e-002, -4.564115e-002, -2.517054e-002, -1.409346e-003, 9.346864e-003, 9.146144e-003, 5.490803e-003, -8.545413e-003, -3.551277e-002, -6.496761e-002, -8.567173e-002, -6.825793e-002, -1.985869e-002, -1.110367e-002, -1.528831e-002, 2.131035e-003, -3.977081e-003, 1.397421e-002, 2.071952e-002, -2.650765e-002, -1.422355e-002, 2.204919e-003, 4.571304e-002, -8.649684e-003, 1.843042e-002, -4.579189e-003, 1.255629e-002, 3.620847e-002, -3.563851e-003, -6.206584e-003, 1.249205e-003, -7.233812e-003, -1.162058e-002, -1.265619e-002, -1.524286e-002, -1.092492e-002, -8.307522e-003, -1.861999e-002, -3.140852e-002, -1.772087e-002, 1.116155e-002, 3.299454e-002, 3.209169e-002, -2.056629e-003, -9.700571e-003, -2.619839e-002, -5.865135e-002, -6.283854e-002, -4.042207e-002, -1.977126e-002, -3.919557e-003, 1.784463e-002, 3.794490e-002, 4.004984e-002, 2.367420e-002, -9.724586e-003, -5.223043e-002, -6.343494e-002, -2.097333e-002, 4.656967e-003, -2.231872e-003, 7.200001e-003, 1.291142e-002, 2.715927e-002, 1.488890e-002, -3.259761e-002, -1.456195e-002, 1.157174e-002, 3.490910e-002, -1.965238e-002, 4.921085e-003, -2.819225e-002, -8.211958e-003, 3.753571e-002, 2.952030e-003, 2.633871e-002, 3.925506e-002, -3.620756e-003, -2.329877e-002, -7.588746e-003, 2.496729e-002, 4.036550e-002, 1.472118e-002, -2.375662e-002, -6.096749e-002, -4.688220e-002, -8.810764e-003, 2.116820e-002, 3.361542e-002, 6.298105e-003, -1.056986e-002, -2.642052e-002, -4.272400e-002, -3.391675e-002, -1.951163e-002, -1.502657e-002, 1.078865e-002, 4.327119e-002, 7.387652e-002, 7.873470e-002, 7.658506e-002, 4.883150e-002, 5.256641e-003, -2.843144e-002, -1.331390e-002, 8.632311e-003, 8.644791e-003, 6.864440e-003, 1.258867e-002, 2.772267e-002, 6.491942e-003, -4.059372e-002, -1.143942e-002, 2.678892e-002, 2.181862e-002, -4.000925e-002, -1.116416e-002, -4.137641e-002, -3.076276e-002, 1.707151e-002, -1.347541e-002, 2.444265e-002, 4.087298e-002, -9.469342e-003, -6.311859e-003, 2.269271e-002, 4.073510e-002, 1.680184e-002, -1.263247e-002, -6.134501e-002, -1.076028e-001, -6.753589e-002, -3.179228e-003, 1.732936e-002, 7.265471e-003, -1.367470e-002, -2.134353e-002, -2.996364e-002, -2.401794e-002, -2.800549e-003, -5.083456e-003, -2.065495e-002, -1.492720e-002, 6.919434e-003, 1.106465e-002, 1.161105e-002, 4.901051e-002, 5.665605e-002, 2.116165e-002, -3.924568e-003, -4.116906e-003, 1.932156e-003, -3.077459e-003, -8.700969e-003, -2.081394e-003, 4.641317e-004, -1.813751e-002, -4.292670e-002, -9.382909e-003, 1.501842e-002,

© ISO/IEC 2004 — All rights reserved


Copyright International Organization for Standardization
Provided by IHS under license with ISO
No reproduction or networking permitted without license from IHS
Not for Resale

1.476906e-002, -5.373541e-002, -5.336667e-003, -3.041906e-002, -3.168303e-002, 3.087631e-003, -2.564749e-002, -2.777422e-004, 3.224763e-003, -3.172859e-002, -1.560641e-002, -1.248320e-003, -2.511469e-002, -1.429627e-002, 3.974859e-002, 3.644775e-002, -1.316423e-003, -2.026406e-002, -1.025416e-002, -8.404835e-003, -1.716882e-002, -4.924755e-003, 2.085845e-002, 2.786720e-002, 2.350440e-002, 1.282808e-002, 9.912432e-003, -2.408021e-002, -2.472882e-002, 3.780436e-002, 4.512697e-002, 5.709172e-002, 7.192223e-002, 2.593481e-002, -1.471150e-002, -2.165720e-002, -2.190901e-002, -1.042431e-002, -1.649518e-002, -2.283271e-002, -1.322934e-002, -1.633690e-002, -2.658080e-002, -3.183426e-002, -2.997789e-003, 7.087404e-004, -2.097261e-004, -5.298910e-002, 8.988828e-003, -1.010057e-002, -2.385914e-002, -9.270614e-003, -2.862552e-002, -6.744829e-003, -7.390727e-004, -1.079728e-002, -8.883479e-003, -1.345821e-002, -2.125423e-002, 1.671415e-004, 3.429467e-002, 3.904502e-002, 8.253630e-003, -2.237382e-002, -2.672455e-002, -2.728897e-002, -1.182442e-002, 2.297810e-002, 4.134688e-002, 3.936626e-002, 3.738946e-002, 2.419324e-002, 2.635857e-002, -1.701144e-002, -2.053005e-002, 1.694601e-002, 6.062073e-002, 7.150235e-002, 6.262788e-002, 2.610003e-002, -1.876736e-002, -2.399699e-002, -1.596921e-002, 2.295668e-003, -1.722598e-002, -2.963948e-002, -8.573684e-003, -1.912126e-002, -1.360086e-002, -3.748184e-004, 5.460428e-003, -8.090481e-003, -3.026213e-003, -4.393681e-002, 2.241939e-002, 1.156446e-002, -1.689456e-002, -1.809417e-002, -2.431898e-002, -1.304533e-003, 5.206871e-003, 1.100803e-003, -1.583138e-003, -8.326359e-003, -9.067272e-003, -3.176038e-004, 8.025748e-003, -2.457880e-003, -2.566192e-002, -4.468770e-002, -4.324484e-002, -2.643179e-002, 1.382169e-002, 4.768301e-002, 3.721712e-002, 3.741683e-002, 3.566667e-002, 3.640187e-002, 4.962427e-002, 2.555677e-002, -9.940745e-003, -7.335588e-003, 1.199017e-002, 2.708391e-002, 3.235844e-002, 1.175015e-002, -1.636381e-002, -1.889793e-002, -7.597431e-003, 1.305255e-002, -1.418537e-002, -2.589169e-002, -2.208861e-003, -2.177971e-002, 4.221379e-003, 2.319090e-002, 9.899292e-003, -2.024790e-002, 2.743212e-003, -3.060485e-002, 3.008743e-002, 1.775455e-002, -7.454301e-003, -5.349416e-003, -2.215569e-002, 4.955337e-003, 1.469962e-002, 1.431882e-003, 3.223965e-003, -6.396709e-003, -1.258076e-002, -1.335534e-002, -1.431265e-002, -2.379095e-002, -3.456310e-002, -3.638235e-002, -1.243304e-002, 1.247231e-002, 4.099290e-002, 4.977412e-002, 1.992132e-002, 2.973242e-002, 3.508980e-002, 3.673196e-002, 5.191496e-002, 7.262560e-002, 3.575166e-002, 4.935716e-003, 1.110540e-003, 5.811028e-003, 8.591213e-003, -3.768576e-003, -2.105627e-002, -1.858501e-002, 2.540657e-003, 2.031491e-002, 7.837372e-004, -1.761219e-002, 2.342230e-003, -1.096502e-002, 1.730159e-002, 3.351998e-002, 1.186519e-002, -1.681654e-002, 1.127441e-002, -1.602409e-002, 3.339801e-002, 2.059777e-002, -4.697082e-003, 1.182824e-002, -7.540571e-003, 8.412207e-003, 1.850460e-002, 2.085970e-003, -6.369496e-003, -1.222004e-002, -1.851549e-002, -1.661835e-002, -1.659885e-002, -1.425327e-002, -1.396362e-002, -3.909356e-003, 1.013867e-002, 3.047151e-002, 3.906389e-002, 1.909659e-002, -3.211370e-003, 1.387447e-002, 2.387835e-002, 2.029685e-002, 3.508966e-002, 6.327934e-002, 6.264124e-002, 3.142054e-002, 6.864796e-003, -1.552186e-003, 2.267954e-003, -3.109160e-003, -1.634520e-002, -1.774101e-002, 1.257345e-002, 2.678019e-002, 2.239639e-002, 3.342241e-003, 1.639398e-002, 9.466721e-003, 2.119419e-002, 2.393956e-002, 4.545681e-003, -1.657607e-002, 1.858734e-002, 2.923910e-002, 2.907968e-002, 1.922945e-002, -7.519332e-003, 1.519956e-002, 1.036449e-003, 1.200747e-002, 1.047147e-002, 9.136840e-004, -1.106124e-002, -2.222641e-002, -2.982264e-002, -2.383718e-002, -2.396486e-002, -1.479593e-002, -7.894980e-003, -2.158437e-003, 2.055756e-002, 2.964573e-002, 9.397724e-003, -2.925837e-002, -3.718521e-002, -1.508129e-002, -5.667928e-003, -5.607180e-003, 6.175333e-003, 3.427833e-002, 5.130253e-002, 4.349075e-002, 2.110599e-002, 2.459202e-003, -7.667216e-003, -2.064288e-002, -3.222629e-002, -1.672840e-002, 1.461086e-002, 2.790946e-002, 2.877306e-002, 1.672196e-002, 1.400239e-002, 1.235359e-002, 1.608629e-002, 2.953888e-003, -7.040006e-004, -8.603229e-003, 1.334473e-002, 2.960031e-002, 1.482870e-002, 7.406969e-003, -1.296825e-002, 1.140288e-002, 1.087053e-002, 9.953073e-003, 5.687898e-003, -1.403010e-003, -1.288020e-002, -2.554901e-002, -4.108553e-002, -3.998303e-002, -3.363382e-002, -2.167719e-002, -8.293269e-003, 9.902944e-003, 2.454797e-002, 1.316521e-002, -3.050772e-002, -6.550669e-002, -5.538427e-002, -3.395021e-002, -3.023888e-002, -3.626350e-002, -2.426528e-002, 2.131079e-003, 2.200901e-002, 2.697985e-002, 1.481543e-002, -5.493254e-003, -2.100329e-002, -3.612553e-002, -3.750161e-002, -1.833456e-002, 6.731169e-003, 2.653541e-002, 2.750444e-002, 1.105946e-002, 4.847999e-003, 1.330565e-002, 8.996374e-003, -8.886262e-003, -3.652661e-004, 5.925412e-003, 1.366516e-002, 2.804373e-002, -1.262155e-003, -8.764884e-003, -1.323449e-002, 7.995897e-003, 1.852133e-002, 9.682154e-003, 5.761855e-003, 6.132582e-003, -4.032454e-003, -1.745224e-002, -3.019533e-002, -3.418642e-002, -2.888814e-002, -1.643448e-002, -4.074725e-004, 1.708834e-002, 1.937061e-002, 7.494840e-003, -2.073376e-002, -5.011869e-002, -3.695363e-002, -1.569569e-002, -1.778603e-002, -2.968832e-002, -1.969818e-002, -8.948662e-003, 7.500990e-004, 8.051604e-003, -1.778488e-003, -1.698723e-002, -3.271874e-002, -4.179437e-002, -3.528330e-002, -1.418176e-002, 5.569609e-003, 2.314333e-002, 2.732854e-002, 6.425137e-003, 7.006336e-003, 1.302155e-002, 1.631537e-003, -8.263823e-003, 5.129724e-003, 1.622270e-002, 7.429597e-003, 2.386148e-002, -4.736668e-003, -7.447436e-003, -8.636684e-003, 1.951938e-003, 1.715445e-002, 7.491302e-003, 2.084494e-003, 1.115749e-002, 1.453615e-002, 1.094336e-002, -1.320599e-004, -6.887996e-003, -4.712562e-004, 1.080466e-002,


© ISO/IEC 2004 — All rights reserved

Copyright International Organization for Standardization
Provided by IHS under license with ISO
No reproduction or networking permitted without license from IHS
Not for Resale

1.786147e-002, 1.977941e-002, 1.796287e-002, 3.107033e-002, 1.789937e-002, -2.944579e-002, -1.958998e-002, -5.279894e-003, -2.992041e-003, -9.638108e-003, -5.194112e-003, -6.883641e-003, -1.352392e-002, 5.312229e-003, 5.142041e-003, -6.808731e-003, -1.829986e-002, -2.188018e-002, -1.478740e-002, 1.436090e-003, 1.124132e-002, 1.815736e-002, 1.987517e-002, 5.923092e-003, 6.491688e-003, 4.225491e-003, -7.838433e-003, -5.124738e-003, 1.614166e-003, 1.459888e-002, 2.307898e-003, 1.649472e-002, -6.285453e-003, -7.101430e-003, -3.633904e-003, 1.505245e-003, 1.480234e-002, 5.729821e-003, -2.393760e-003, 6.924073e-003, 1.916150e-002, 2.443507e-002, 2.378814e-002, 1.720307e-002, 1.763425e-002, 1.514819e-002, 1.024095e-002, -2.692091e-003, 9.771525e-003, 3.532966e-002, 1.603753e-002, -1.842094e-002, -6.319836e-003, -7.851118e-003, -1.828258e-002, -3.680868e-002, -2.203107e-002, -1.003970e-003, -1.482080e-002, -8.308395e-003, 7.155876e-003, 8.152574e-003, 3.077496e-003, 1.006347e-003, 5.438144e-003, 1.034071e-002, 5.538772e-003, 2.369039e-003, 1.106031e-002, 8.384352e-003, 2.493068e-003, -4.334065e-003, -1.171178e-002, -7.657863e-003, 3.911397e-003, 6.925034e-003, -1.599227e-002, 2.200851e-003, -1.191062e-002, -1.211162e-002, 2.269627e-003, 8.082069e-003, 1.886321e-002, 2.073428e-003, -1.817393e-003, 2.070424e-003, 1.383198e-002, 2.554653e-002, 2.795871e-002, 1.950097e-002, 8.327951e-003, 1.300677e-003, -1.254063e-002, -2.666967e-002, -1.031408e-003, 1.372627e-002, -6.774315e-003, 5.651432e-003, -2.354869e-003, -2.014278e-002, -1.924269e-002, -2.935878e-002, -1.918810e-002, 4.000982e-003, -5.100922e-003, -2.785213e-002, -1.710875e-002, -5.312956e-003, -3.341712e-003, -1.132906e-003, 7.930529e-003, 9.334748e-003, -5.055227e-003, -1.175980e-002, 5.369306e-003, 1.562348e-002, 1.137525e-002, 3.225499e-003, -1.889724e-003, -7.113766e-003, -1.104312e-002, -4.702116e-003, -4.029985e-002, -9.206652e-003, -1.402346e-002, -1.747595e-002, 7.596405e-006, 3.521713e-003, 3.470016e-003, -3.655683e-003, 3.220909e-004, 4.734388e-003, 6.755689e-003, 1.900101e-002, 2.659759e-002, 1.729414e-002, 1.495560e-004, -1.278344e-002, -2.372796e-002, -2.198759e-002, 2.717718e-003, 1.768451e-002, 1.788054e-002, 2.139867e-002, 1.114892e-002, -6.904894e-003, 1.206818e-002, 2.711938e-002, 3.297437e-002, 3.530333e-002, 1.302562e-002, -2.454232e-002, -3.336965e-002, -2.357195e-002, -1.501690e-002, -6.651344e-003, 6.102229e-003, 6.090738e-003, -1.329029e-002, -1.078513e-002, 1.718043e-002, 3.061926e-002, 1.872070e-002, 6.268626e-003, 4.100764e-003, -5.877992e-003, -2.158493e-002, -1.525913e-002, -5.810214e-002, -2.240167e-002, -1.642320e-002, -1.679695e-002, -1.515233e-003, 6.311906e-004, -9.381021e-003, -9.243065e-003, -3.787300e-003, 2.361609e-003, 1.887480e-003, 1.524196e-002, 2.930581e-002, 1.821560e-002, -6.338867e-003, -2.591413e-002, -2.164562e-002, -5.460285e-003, 1.975856e-002, 3.411381e-002, 3.636279e-002, 3.022282e-002, 2.425380e-002, 6.145170e-003, 2.708522e-002, 5.941399e-002, 6.891304e-002, 6.262504e-002, 3.690141e-002, -3.410216e-003, -3.503941e-002, -3.551957e-002, -1.923101e-002, -4.777684e-003, 5.451157e-003, 4.973634e-003, -2.010282e-002, -9.312042e-003, 2.880730e-002, 2.627108e-002, -5.458075e-003, 4.257106e-003, 1.061790e-002, -8.881067e-003, -2.641589e-002, -2.362507e-002, -6.386372e-002, -2.609549e-002, -1.655264e-002, -8.504426e-003, 1.767781e-003, 9.262064e-003, -1.885748e-003, -2.925436e-003, -3.084169e-003, 5.670683e-004, -2.511738e-003, 7.744860e-003, 2.939218e-002, 1.405083e-002, -1.147485e-002, -2.770696e-002, -1.690392e-002, 4.529874e-003, 2.109664e-002, 2.698167e-002, 2.566061e-002, 8.643559e-003, -8.712218e-003, -1.137778e-002, 5.117001e-004, 2.391362e-002, 4.083821e-002, 4.340813e-002, 3.283046e-002, 3.737664e-003, -2.908198e-002, -3.918937e-002, -2.045136e-002, 2.761297e-004, 5.783651e-003, 8.138202e-004, -2.525782e-002, -8.617826e-003, 1.168814e-002, 2.848923e-003, -1.595358e-002, 3.176074e-004, 8.075414e-003, -2.583430e-003, -1.415099e-002, -1.686833e-002, -2.602631e-002, -1.395083e-002, -1.167127e-002, -6.956539e-003, 5.572706e-003, 7.885191e-003, 8.557127e-004, 1.415455e-003, -8.624685e-003, -4.697696e-003, -4.293839e-003, 1.074138e-003, 2.093522e-002, 8.476093e-003, -8.869371e-003, -1.662867e-002, -1.677789e-002, -1.916917e-002, -9.052233e-003, 7.068437e-003, 1.695954e-002, 4.216919e-003, 2.049797e-003, -1.712647e-003, 2.882754e-003, 7.353575e-003, 1.131411e-002, 1.212081e-002, 3.072658e-003, -1.112721e-002, -1.370128e-002, -1.658989e-002, -6.165165e-003, 7.699095e-003, 8.721622e-003, -2.510192e-003, -2.356259e-002, -5.829344e-003, -1.323710e-002, -1.638629e-002, -1.678714e-002, -2.445781e-003, 5.066316e-003, 8.956239e-003, 1.418265e-003, -5.621031e-004, -2.073175e-002, -5.576563e-003, -6.776922e-003, -7.396206e-003, 2.334873e-003, 4.316994e-003, -8.017205e-003, 4.625014e-003, -8.419347e-003, -1.056742e-002, -6.053317e-003, -4.066651e-003, 6.093261e-003, 4.466182e-003, 1.344705e-003, 2.963836e-004, -1.691707e-002, -3.906417e-002, -2.923809e-002, -2.556667e-003, 1.173732e-002, 1.323855e-002, 1.562351e-002, 1.054922e-002, 8.003583e-003, 5.353869e-003, -1.880917e-003, -1.058650e-002, -2.587307e-002, -3.082044e-002, -3.864986e-003, 1.533561e-002, 1.889440e-002, 1.744725e-002, 1.123818e-002, -6.944782e-003, -1.621007e-002, -7.853481e-003, -2.712455e-002, -2.704698e-002, -1.382770e-002, 2.564665e-003, 1.540607e-002, 1.515371e-002, 3.743720e-003, 1.770936e-002, -9.421602e-003, 1.966285e-003, 1.619890e-003, -2.106931e-003, -3.250228e-003, -7.456562e-003, -1.834230e-002, -6.387445e-003, -2.832131e-003, -1.057358e-002, -5.483622e-003, -6.031169e-003, -5.068837e-003, 4.447076e-003, 1.361528e-002, 2.160426e-002, 2.607379e-003, -1.034360e-002, -1.148185e-002, -4.267279e-003, -2.823132e-003, -8.130228e-003, -2.087967e-002, -3.248252e-002, -3.415393e-002, -3.049842e-002, -3.125081e-002, -3.884279e-002, -4.066049e-002, -1.976103e-002, 1.082653e-002, 3.122551e-002,

© ISO/IEC 2004 — All rights reserved


Copyright International Organization for Standardization
Provided by IHS under license with ISO
No reproduction or networking permitted without license from IHS
Not for Resale

3.464959e-002, 2.523956e-002, 1.203910e-002, -7.152015e-003, -2.589468e-003, -9.036793e-003, -3.497650e-002, -1.327211e-002, -1.923126e-003, 5.476257e-003, 2.157018e-002, 1.651383e-002, 5.869256e-003, 2.888851e-002, -5.988974e-004, 1.577582e-002, 1.600625e-002, 5.612815e-003, -9.469847e-004, -4.724654e-003, -2.313368e-002, -2.213050e-002, -1.151046e-003, -1.536257e-002, 7.360468e-003, 1.315441e-003, -7.361718e-003, 4.782570e-003, 2.307635e-002, 2.746577e-002, 1.814834e-002, 2.140149e-002, 2.781791e-002, 2.973797e-002, 2.557960e-002, 1.033932e-002, -7.599686e-003, -1.846151e-002, -2.447215e-002, -2.047100e-002, -1.388290e-002, -7.853353e-003, 2.702377e-004, 7.300385e-003, 1.838439e-002, 2.566724e-002, 2.783413e-002, 2.295328e-002, 1.740304e-002, 4.489496e-003, 1.218421e-002, -2.106418e-002, -2.965541e-002, 2.115839e-003, -7.369916e-003, -3.579531e-003, 9.924042e-003, 3.411130e-003, 2.215461e-003, 2.884932e-002, 7.551254e-003, 2.088836e-002, 2.283234e-002, 1.014296e-002, 6.841623e-003, 4.298281e-003, -1.511354e-002, -2.765668e-002, -1.192067e-002, -2.496793e-002, 8.438930e-003, 1.057929e-002, -9.827206e-003, -7.088832e-003, 7.088472e-003, -2.555051e-003, -1.419549e-002, -7.703652e-003, 1.029244e-002, 2.160722e-002, 1.481611e-002, -1.665092e-003, -1.273020e-002, -1.751824e-002, -1.837661e-002, -1.296480e-002, -1.178335e-003, 1.001047e-002, 1.520232e-002, 6.580602e-003, -1.988536e-003, 1.554109e-003, 4.868755e-003, 6.648774e-003, 1.613602e-002, 1.169579e-002, 7.809175e-003, -2.875565e-002, -1.011797e-002, 1.484178e-002, -1.675975e-002, -9.788943e-003, 4.768810e-003, -2.726702e-003, 3.584355e-003, 2.255283e-002, 1.341445e-002, 2.583819e-002, 1.803881e-002, 4.855986e-003, 9.918136e-003, 1.427478e-002, -4.151061e-003, -2.564349e-002, -1.624831e-002, -2.432121e-002, 2.098236e-003, 2.974340e-002, -3.828586e-003, -2.391033e-002, -1.899296e-002, -2.363077e-002, -3.368295e-002, -3.088976e-002, -1.424184e-002, 3.298102e-003, 4.602401e-003, -8.795840e-004, -4.103654e-003, -3.399116e-003, -2.481174e-003, -1.526654e-003, 4.227487e-003, 1.019556e-002, 5.570224e-003, -9.777199e-003, -2.528544e-002, -2.534934e-002, -1.619878e-002, -2.674954e-003, 1.203721e-002, 2.560444e-002, 5.095209e-003, -2.133192e-002, 1.655773e-002, 1.458092e-002, -7.818948e-003, 4.524133e-003, 2.542949e-003, -1.285283e-002, -6.341631e-003, 1.541003e-002, 1.385730e-002, 2.218885e-002, -5.270619e-003, -6.840930e-003, 6.051542e-003, 4.848863e-003, -6.482391e-003, -1.415762e-002, -1.025283e-002, -3.295238e-003, 9.581686e-003, 4.063229e-002, 7.593861e-003, -3.082471e-002, -3.096617e-002, -2.519035e-002, -2.940176e-002, -2.851128e-002, -2.237561e-002, -1.150942e-002, -2.119173e-003, 4.709857e-003, 6.673807e-003, 7.470237e-003, 1.028889e-002, 1.041250e-002, 9.293792e-003, 1.105124e-002, 4.598219e-003, -1.157239e-002, -3.119743e-002, -4.084840e-002, -2.853885e-002, -8.905810e-003, 1.248956e-002, 2.580922e-002, -5.923440e-003, 1.607369e-003, 2.279448e-002, -8.144197e-003, -1.034696e-002, 1.390575e-002, 5.594691e-003, -1.395461e-002, -1.547790e-002, 6.079355e-003, 1.287264e-002, 3.389829e-003, -3.334035e-002, -2.179682e-002, -8.113370e-003, -2.573240e-003, -1.105443e-002, -7.946939e-003, 1.570140e-003, 3.272439e-003, 1.474620e-003, 2.604995e-002, 1.212693e-002, -2.198736e-002, -2.621730e-002, -1.941186e-002, -2.216724e-002, -2.649427e-002, -2.609371e-002, -2.846045e-002, -2.195994e-002, -1.406277e-002, -9.380407e-003, -6.243740e-003, -4.647458e-003, 5.109842e-004, 2.483210e-003, 4.464231e-003, 2.694633e-003, -5.981652e-003, -2.755898e-002, -4.299930e-002, -3.141772e-002, -1.371315e-002, 6.886972e-003, 6.639948e-003, 7.990508e-003, 2.882868e-002, 5.662678e-003, -2.905999e-002, -2.069872e-002, 9.902752e-003, 1.694367e-002, -1.357153e-003, -1.270374e-002, -9.638631e-003, 8.059255e-003, -1.071148e-002, -3.637761e-002, -2.500683e-002, -1.386704e-002, -4.551965e-003, -2.051249e-003, 1.894464e-003, 1.114276e-002, 3.366599e-003, -1.139417e-002, -7.623565e-004, 1.128813e-002, -8.485757e-003, -1.214287e-002, -7.660566e-003, -8.412372e-003, -9.121065e-003, -1.422077e-002, -2.340612e-002, -2.303823e-002, -2.011646e-002, -1.350023e-002, -7.119544e-003, -3.719079e-003, 1.036383e-003, 3.757224e-003, 6.752063e-003, 6.055079e-003, -2.183278e-003, -1.940881e-002, -3.100575e-002, -2.356018e-002, -8.959525e-003, 1.035784e-003, -5.423899e-003, 1.537097e-002, 4.268777e-002, 8.184153e-003, -3.028306e-002, -3.115495e-002, -8.908646e-003, 2.113311e-002, 1.296589e-002, -2.755895e-003, -8.283373e-003, 1.073701e-002, -5.624763e-003, -2.091269e-002, -5.030188e-003, 1.102711e-003, 4.730246e-003, 5.480403e-003, 5.292595e-003, 9.457284e-003, -3.182384e-003, -1.381051e-002, -1.450801e-002, -8.018967e-004, -2.039140e-004, -4.938127e-004, 1.350151e-003, 7.617738e-003, 1.001128e-002, 4.790703e-003, 2.250108e-003, -4.381548e-003, -9.607861e-003, -9.724302e-003, -8.507088e-003, -3.203894e-003, 3.468430e-003, 7.974305e-003, 1.491774e-002, 1.075569e-002, 2.969309e-003, -4.561073e-003, -1.630768e-002, -1.095068e-002, -7.143245e-004, -7.124450e-003, -1.422281e-002, 3.803864e-003, 2.546273e-002, 1.435493e-002, -1.364360e-002, -2.887354e-002, -1.849617e-002, 8.503673e-003, 1.057093e-002, -7.420206e-004, -3.457819e-003, 2.227560e-002, 5.866162e-003, -2.721051e-004, 1.963929e-002, 1.992058e-002, 6.794460e-003, 3.813735e-003, 6.304238e-003, -2.327435e-003, -1.663335e-002, -2.417515e-003, -1.019856e-002, -1.034443e-002, 1.499276e-003, 4.722989e-003, 6.316173e-003, 1.723957e-002, 2.241739e-002, 2.220705e-002, 2.261510e-002, 1.621529e-002, 4.360006e-003, -3.117953e-003, -6.357160e-003, -1.907374e-003, 4.243578e-003, 1.473237e-002, 2.452398e-002, 2.182063e-002, 1.568662e-002, 7.794399e-003, -3.026026e-003, 5.234055e-003, 5.258424e-003, -1.438018e-002, -2.246093e-002, -1.571938e-003, 1.072819e-002, 1.529184e-002, 3.129126e-003, -7.963874e-003, -2.957490e-003, 8.890251e-003, 1.336415e-003, -2.075465e-003, -2.330642e-003, 7.366419e-003, 1.757992e-003, -


© ISO/IEC 2004 — All rights reserved

Copyright International Organization for Standardization
Provided by IHS under license with ISO
No reproduction or networking permitted without license from IHS
Not for Resale

1.266659e-002, 1.965127e-003, 6.693430e-003, -5.363560e-003, -1.612123e-002, -8.206385e-003, -1.209433e-002, -1.457680e-002, 7.399198e-003, 3.517502e-005, -1.614259e-002, -5.563092e-003, -8.486206e-003, -1.333724e-002, -9.658619e-004, 4.825185e-003, 7.397636e-003, 1.201323e-002, 8.556694e-003, -2.232178e-003, -1.391026e-002, -1.783252e-002, -1.353633e-002, 4.599821e-004, 9.166059e-003, 1.270415e-002, 1.293724e-002, 8.342838e-003, -1.730848e-003, -4.060291e-003, 8.217451e-003, -5.662855e-003, -2.112150e-002, -1.999347e-002, 2.324842e-003, -3.417987e-003, 9.684585e-003, 1.153942e-002, -2.496724e-003, 9.001684e-003, 2.045704e-002, 1.092944e-002, 1.637018e-002, 9.239611e-003, 1.725741e-002, 3.760393e-003, -1.623287e-002, 1.168120e-003, 1.108253e-002, -3.633293e-003, -1.108988e-002, 2.184524e-003, 9.285672e-003, 1.392064e-003, 2.748888e-002, 2.448223e-002, 9.037732e-004, 5.392639e-004, -1.957760e-003, -1.190549e-002, 6.002512e-004, 9.671409e-003, 1.289666e-002, 1.340896e-002, 7.893343e-003, -6.994588e-003, -1.523127e-002, -1.874858e-002, -1.266160e-002, -7.311161e-004, 5.231397e-003, 9.257179e-003, 7.311903e-003, -3.416912e-003, -5.961100e-003, 8.614569e-004, 1.490567e-002, 4.402378e-003, 5.877854e-003, 8.349636e-003, 5.395174e-003, -3.474949e-003, 9.553740e-003, 1.279666e-002, -4.242443e-003, 5.857288e-004, 1.639814e-002, 9.821333e-003, 9.757554e-003, 1.117675e-002, 2.324618e-002, 2.069256e-003, -5.280460e-003, -8.045750e-003, 3.348608e-003, -2.174309e-003, -3.868566e-003, 4.725628e-003, 1.525073e-002, 9.084836e-003, 3.982549e-002, 2.855740e-002, 7.457582e-003, -7.248659e-003, -3.691456e-003, -1.330979e-002, -6.285482e-003, 7.831649e-003, 1.686152e-002, 2.116042e-002, 2.165431e-002, 9.139278e-003, 1.067146e-003, -5.544927e-003, -1.775591e-003, 3.158756e-003, 5.433929e-003, 6.020164e-003, 2.644154e-003, -7.936804e-003, -6.810335e-003, 6.100940e-004, 1.191493e-002, 6.548701e-003, 2.402874e-002, 3.471204e-002, 9.655939e-003, -9.677525e-003, 1.584565e-002, 2.869960e-002, 1.004303e-002, 4.000103e-003, 1.360842e-002, 2.901801e-003, -4.997364e-003, 2.228353e-003, 7.529406e-003, 1.384180e-003, -1.702687e-003, -1.739964e-004, 1.350702e-002, 5.122868e-003, -1.630248e-002, -8.502506e-003, 1.248396e-002, 1.915716e-003, 1.989241e-002, 1.165198e-002, -6.750161e-003, -1.566343e-002, -1.938396e-003, -7.638277e-003, -1.590119e-002, -7.416581e-003, 4.929004e-003, 2.015051e-002, 2.655722e-002, 2.401223e-002, 1.624528e-002, 9.427387e-003, 7.537996e-003, 1.117017e-002, 7.447728e-003, -2.218941e-003, -1.139704e-002, -1.693361e-002, -1.399668e-002, -1.779776e-003, 3.012036e-003, 5.568618e-003, 2.108182e-002, 2.853229e-002, 1.088341e-002, -1.528482e-002, -1.046631e-003, 1.268361e-002, 1.804758e-002, 1.312849e-002, 1.498126e-002, 4.733123e-003, -1.820461e-002, -2.695926e-002, -5.018761e-003, -2.560849e-003, -2.670411e-003, 3.808666e-003, 4.152552e-003, -8.465084e-003, -2.518837e-002, -1.075583e-002, 9.872877e-003, -7.593923e-003, -1.550136e-003, -6.073180e-003, -1.974440e-002, -1.682838e-002, 2.755185e-003, -1.817532e-005, -1.228964e-002, -1.471104e-002, -9.188167e-003, 4.685413e-003, 1.392617e-002, 1.757521e-002, 1.617706e-002, 1.453649e-002, 1.280278e-002, 9.821275e-003, -1.491129e-003, -7.689910e-003, -1.421182e-002, -1.745785e-002, -1.783012e-002, -1.487774e-002, -5.090468e-003, -3.423997e-003, -4.736880e-003, -4.559502e-003, -9.026291e-003, -2.528167e-002, -1.340925e-002, -1.066889e-002, -1.285396e-002, -5.776819e-004, 7.774604e-003, 1.184979e-002, -6.737285e-003, -2.483704e-002, -1.768757e-002, -8.143589e-003, 5.878269e-003, 2.757148e-002, 2.099583e-002, 1.153868e-002, 2.702405e-003, 2.681111e-002, 3.746547e-002, 2.216871e-002, 1.651059e-002, 6.407104e-003, 2.707648e-003, 7.951629e-004, 2.316506e-002, 2.341507e-002, 1.347329e-002, 9.752298e-003, 3.007129e-003, -9.348409e-004, -1.761291e-004, 1.376044e-003, 4.482025e-003, 8.652133e-003, 6.644557e-003, -3.422054e-004, -6.657820e-004, 1.726787e-003, 8.083236e-004, 1.911518e-003, 6.435732e-004, -2.070204e-003, 6.044819e-003, -2.955197e-003, -1.705260e-002, -5.386486e-003, -7.165204e-003, -8.153553e-003, 9.316002e-003, 2.305122e-003, -1.171667e-002, -5.818002e-003, 1.339276e-003, 7.306499e-003, 5.442046e-003, 2.390811e-003, -4.259490e-002, -2.444977e-002, -1.131616e-002, 2.565417e-003, -6.024448e-003, -1.866557e-002, -1.915861e-002, 4.486136e-003, 2.087630e-003, -1.463869e-002, -2.422972e-002, -2.779872e-002, -2.654084e-002, -2.240893e-002, -2.360621e-003, 9.256546e-003, 4.481313e-003, 2.753929e-003, 2.242816e-003, 6.227909e-004, -1.989752e-003, -5.811053e-003, -6.759260e-003, -4.885053e-003, -3.708685e-003, -1.164894e-003, 5.538305e-003, 5.795045e-003, 5.903120e-003, 5.437999e-003, 7.125436e-003, 7.606423e-003, 1.330772e-002, 1.559709e-002, 6.589157e-003, 1.408947e-002, 6.791795e-004, -3.630364e-003, 8.910369e-003, -2.947109e-003, -3.387885e-003, -5.929391e-003, -8.431896e-003, -3.388475e-003, -1.243886e-002, -6.338015e-004},
{1.969671e-002, 2.376986e-002, 2.914027e-002, 2.289849e-002, 1.326362e-002, -9.155270e-003, -1.902666e-002, -8.671834e-003, 2.134445e-002, 4.163535e-002, 2.450244e-002, -4.266508e-003, -2.116075e-002, -1.998707e-002, -2.547732e-002, -3.596051e-002, -3.459105e-002, -2.240874e-002, -8.455822e-003, 6.498930e-003, 2.026198e-002, 1.934111e-002, 1.242743e-002, -1.881258e-003, -8.393192e-003, -1.282756e-002, -1.586442e-002, -1.565890e-002, -1.472245e-002, -1.614771e-002, -2.276759e-002, -1.211194e-002, 2.663273e-003, 2.029559e-002, 3.229837e-002, 2.404913e-002, 2.707411e-003, -8.528227e-003, -1.721720e-003, 1.030742e-002, 4.131061e-003, 6.831443e-003, 1.973651e-002, -8.841476e-003, -2.358472e-002, -2.970256e-002, -1.775969e-003, -3.030605e-003, 5.483191e-003, 6.791198e-003, 3.513624e-003, -1.426822e-002, -2.272393e-002, 6.870278e-004, 2.409598e-002, 2.749315e-002, 1.383987e-002, 1.244340e-002, 1.834927e-002, 1.363124e-002, -2.062960e-003, -5.135871e-003, 8.114479e-003, 2.402924e-002,

© ISO/IEC 2004 — All rights reserved


Copyright International Organization for Standardization
Provided by IHS under license with ISO
No reproduction or networking permitted without license from IHS
Not for Resale

3.270023e-002, 3.358240e-002, 3.279761e-002, 2.631861e-002, 1.240880e-002, 5.620311e-005, -9.015538e-003, -1.083043e-002, -1.974577e-002, -1.982528e-002, -1.439233e-002, -1.420019e-002, -5.608022e-003, 7.136516e-003, 1.703930e-002, 2.341496e-002, 3.486801e-002, 5.030493e-002, 4.076397e-002, 1.264138e-002, 3.882254e-004, 1.703302e-002, 1.518108e-002, 5.701354e-003, 1.204034e-002, 2.004103e-002, -1.253953e-002, -2.409121e-002, -7.796829e-003, -1.059816e-002, 5.632620e-003, 3.516282e-003, -3.703673e-004, -2.152181e-002, -3.073722e-002, -1.774947e-002, -7.433311e-003, 1.444213e-003, 9.057009e-003, 1.311188e-002, -4.954403e-003, -2.277090e-002, -2.167682e-002, -1.013044e-002, -1.193384e-003, 6.646365e-003, 1.206809e-002, 1.455480e-002, 1.355151e-002, 1.030357e-002, 5.486803e-003, -1.848970e-003, -8.563737e-003, -1.054369e-002, -1.908242e-002, -2.349633e-002, -2.578324e-002, -2.477154e-002, -1.876749e-002, -9.731832e-004, 1.134321e-002, 1.293794e-002, 4.727192e-003, 2.624035e-003, 1.728498e-002, 1.064104e-002, -8.333743e-003, 6.478538e-003, 2.416242e-002, 1.393995e-002, 5.867468e-003, 2.235198e-002, -1.050902e-003, -1.324191e-002, -1.103858e-002, -1.119145e-002, 7.472652e-003, 7.315476e-003, -6.728474e-003, -2.754000e-002, -3.552388e-002, -2.866862e-002, -4.613068e-003, 1.931084e-002, 2.486290e-002, -2.323098e-003, -2.760661e-002, -2.497657e-002, -8.977790e-003, -5.894697e-003, -8.816325e-003, -4.656865e-003, -1.162100e-004, 8.432422e-003, 1.671400e-002, 1.879491e-002, 1.845557e-002, 1.385093e-002, 8.538018e-003, 5.928111e-003, -3.393304e-003, -1.213613e-002, -1.544782e-002, -1.211198e-002, -9.582730e-003, -5.815695e-003, 1.143548e-002, 2.388246e-002, 1.659756e-002, -9.301351e-003, -4.429597e-003, 5.095535e-004, -1.682960e-002, -1.471173e-002, 1.486293e-002, 8.037130e-003, -8.111970e-003, 2.997529e-003, -3.393705e-003, -6.140452e-003, -3.392226e-002, -3.023030e-002, -1.174443e-003, -1.060828e-002, -2.279777e-002, -3.188852e-002, -4.728877e-002, -2.867943e-002, 6.286181e-003, 3.157820e-002, 7.837814e-003, -1.223671e-002, -1.711784e-002, -7.807818e-003, -5.200182e-003, -8.875628e-003, -1.402402e-002, -1.502517e-002, -1.027414e-002, 1.499090e-003, 1.188818e-002, 2.048975e-002, 2.761399e-002, 2.912449e-002, 2.425234e-002, 1.605101e-002, 3.968992e-003, -7.917994e-003, -1.781991e-002, -1.344666e-002, -1.402545e-003, 7.068668e-003, 2.010525e-003, 1.011946e-002, 2.933150e-002, 1.096019e-002, -1.535303e-002, -1.440601e-002, -2.542994e-002, -3.200486e-002, -1.204880e-002, 5.036836e-003, -1.483195e-002, -1.605976e-002, -1.177927e-002, -2.619540e-003, -3.575465e-002, -2.355783e-002, 3.806570e-003, -8.604158e-003, 5.105945e-003, 7.024556e-004, -1.140498e-002, -3.657540e-003, 2.012994e-002, 2.136374e-002, 6.377797e-003, 3.250986e-003, 2.097430e-003, -5.666937e-004, -1.110895e-002, -2.731521e-002, -3.846213e-002, -3.806841e-002, -3.060976e-002, -2.045121e-002, -1.142945e-002, 1.484483e-004, 9.715137e-003, 1.803538e-002, 1.660253e-002, 1.103765e-002, -4.041514e-003, -2.454375e-002, -3.694986e-002, -3.338616e-002, -1.310344e-002, 1.205940e-002, 1.621347e-002, 8.129007e-003, 1.698248e-002, 3.105056e-002, 1.412909e-002, 8.908111e-004, -6.689197e-003, -7.699708e-003, -8.172942e-003, 1.059219e-002, 5.862827e-003, -1.589768e-002, -1.067981e-002, 1.145782e-002, -3.059639e-002, -7.320001e-003, 1.386796e-002, -1.910264e-003, 1.694425e-002, 2.068911e-002, -4.971484e-003, -5.284910e-003, 1.133366e-002, 1.373717e-002, 8.754235e-003, 9.458223e-003, 3.762956e-003, 2.633732e-003, -1.572019e-002, -3.555323e-002, -4.152537e-002, -4.148682e-002, -3.740328e-002, -2.890527e-002, -2.272091e-002, -1.197736e-002, 1.539278e-003, 1.108231e-002, 1.821190e-002, 1.872053e-002, 5.292644e-003, -1.954382e-002, -4.438517e-002, -5.383230e-002, -4.036208e-002, -9.450543e-003, 1.261776e-002, 1.466998e-002, 8.395805e-003, 1.075626e-002, 1.711506e-002, 9.315120e-003, -2.534158e-003, 3.769740e-003, 1.020634e-002, -1.916022e-003, 1.592395e-003, -1.286525e-002, -2.461879e-002, 4.949194e-003, -1.341713e-002, 1.442447e-002, 2.539622e-002, -1.830179e-003, 2.169649e-002, 2.389875e-002, -2.007694e-002, -1.221627e-002, 5.982866e-003, 9.385137e-003, 5.777097e-003, 1.445002e-002, 2.071389e-002, 1.935357e-002, 9.621591e-003, -8.760488e-003, -2.032493e-002, -2.721675e-002, -2.805912e-002, -2.599221e-002, -2.302501e-002, -1.170000e-002, 5.446051e-003, 2.174003e-002, 3.267276e-002, 3.709147e-002, 3.111042e-002, 8.205380e-003, -1.960237e-002, -4.098165e-002, -4.500863e-002, -2.691544e-002, 1.703652e-003, 2.171311e-002, 1.447069e-002, -4.427297e-003, -5.545768e-003, 6.313152e-003, 5.534678e-004, 3.784214e-003, 2.879603e-002, 1.729801e-003, -1.364547e-002, -1.289189e-002, -2.853636e-002, -5.034494e-004, 5.276610e-003, 2.962868e-002, 2.060714e-002, -5.537482e-003, 3.268478e-002, 5.758036e-003, -2.559860e-002, -1.007491e-002, 3.444971e-003, -7.739253e-004, 5.276390e-003, 2.928266e-002, 5.180539e-002, 5.119880e-002, 3.998612e-002, 1.998140e-002, 2.548900e-004, -1.785119e-002, -2.813193e-002, -3.104874e-002, -2.550331e-002, -9.211700e-003, 1.033969e-002, 2.999795e-002, 4.350761e-002, 5.441235e-002, 5.640664e-002, 3.607234e-002, 1.140102e-002, -1.185657e-002, -2.563550e-002, -2.055123e-002, 4.687833e-003, 3.012296e-002, 2.453991e-002, -3.391789e-004, -1.833632e-002, -7.242625e-003, -9.032031e-003, -8.191524e-003, 2.674145e-002, 1.132871e-002, -3.174113e-002, -3.026485e-002, -3.091737e-002, 3.594331e-004, 2.474017e-002, 3.279910e-002, 1.202994e-002, -2.067120e-004, 2.678036e-002, -9.806520e-003, -2.077384e-002, 8.976404e-004, -5.372125e-004, -5.425498e-003, 8.908607e-003, 4.135305e-002, 6.498786e-002, 6.100330e-002, 5.148188e-002, 2.651791e-002, -2.022292e-003, -2.608655e-002, -3.553753e-002, -3.997090e-002, -2.891036e-002, -1.350117e-002, 4.285824e-003, 1.283555e-002, 2.554230e-002, 3.670888e-002, 4.803411e-002, 4.204363e-002, 2.479981e-002, 1.995461e-003, -1.297227e-002, -1.542584e-002, 4.494344e-003, 3.748449e-002,


© ISO/IEC 2004 — All rights reserved

Copyright International Organization for Standardization
Provided by IHS under license with ISO
No reproduction or networking permitted without license from IHS
Not for Resale

4.804356e-002, 2.492537e-002, -1.223643e-002, -1.664492e-002, -6.369961e-003, -1.672378e-002, 8.114054e-003, 1.628799e-002, -2.985900e-002, -3.522604e-002, -4.163517e-003, 6.202462e-003, 2.868517e-002, 3.711388e-002, 2.000487e-003, -1.584955e-003, 1.002205e-002, -1.575801e-002, -5.561132e-004, 1.036527e-002, -7.088940e-003, -1.088264e-002, 7.509128e-003, 3.778822e-002, 5.418089e-002, 4.747547e-002, 2.712521e-002, 7.548931e-003, -1.349805e-002, -3.435570e-002, -4.337014e-002, -4.136439e-002, -2.964674e-002, -1.698259e-002, -7.082115e-003, -6.085830e-003, 1.656332e-003, 1.342080e-002, 2.859841e-002, 2.981071e-002, 2.141694e-002, 2.105789e-003, -1.337133e-002, -1.765686e-002, -5.481664e-003, 2.041061e-002, 4.883330e-002, 4.053934e-002, 2.117871e-003, -1.450014e-002, -3.044851e-004, -1.235956e-002, -1.479088e-002, 2.394283e-003, -1.089106e-002, -2.588119e-002, 3.746423e-003, 1.028127e-002, 2.379241e-002, 2.565570e-002, -4.205264e-003, -9.065010e-004, -8.108728e-003, -1.088513e-002, 1.136550e-002, 7.742710e-003, -1.429186e-002, -2.278945e-002, -6.482232e-003, 2.143807e-002, 2.612722e-002, 1.802951e-002, 4.742411e-003, -3.807363e-003, -1.281103e-002, -2.349881e-002, -3.050491e-002, -2.673515e-002, -2.317163e-002, -1.663546e-002, -1.200946e-002, -1.432411e-002, -1.305526e-002, -2.917325e-003, 1.143592e-002, 2.272212e-002, 2.033647e-002, 9.436544e-003, -5.073859e-003, -1.483762e-002, -2.016540e-002, -7.429628e-003, 2.691756e-002, 3.445150e-002, 6.725446e-003, -1.703419e-002, 2.995051e-003, -1.319787e-003, -2.519651e-002, -1.306738e-002, 5.623976e-003, -8.848111e-003, 1.024903e-002, 1.465650e-002, 1.267261e-002, 1.105878e-002, -5.745783e-003, -1.141164e-002, -2.572151e-002, -1.986987e-003, 1.511613e-002, 2.601195e-003, -1.749207e-002, -2.872255e-002, -2.331207e-002, -4.664672e-003, -4.778234e-003, -5.208243e-003, -2.041726e-003, 4.690894e-003, 6.694173e-003, 2.032207e-003, -4.652650e-003, -7.879131e-003, -9.271519e-003, -8.141417e-003, -8.828879e-003, -1.154291e-002, -1.709356e-002, -1.379538e-002, -8.218101e-005, 1.278240e-002, 2.162180e-002, 1.869261e-002, 6.535009e-003, -1.154904e-002, -2.557247e-002, -3.238625e-002, -8.900439e-003, 1.115352e-002, -3.058595e-003, -2.515911e-002, -7.035779e-003, 1.413726e-002, -1.982617e-002, -2.777659e-002, 1.647587e-002, 5.916195e-003, 1.425129e-002, 2.014772e-002, 2.779129e-003, 1.207707e-003, -4.611617e-003, -2.403626e-002, -2.710605e-002, 9.559984e-003, 9.954346e-003, -8.097248e-003, -1.536198e-002, -3.350590e-002, -3.736054e-002, -2.332224e-002, -1.839242e-002, -7.597049e-003, 6.290422e-003, 2.244852e-002, 2.623488e-002, 2.075446e-002, 1.242578e-002, 7.045418e-003, 6.928472e-003, 7.094540e-003, 2.759309e-003, -4.565441e-004, -8.327629e-003, -1.202407e-002, -6.479256e-003, -9.748491e-004, 8.950874e-003, 1.735987e-002, 9.990568e-003, -4.868134e-003, -1.675792e-002, -3.016272e-002, -2.848216e-002, -7.698154e-003, -2.119026e-002, -3.173174e-002, -1.618236e-002, 2.275697e-002, -8.007963e-003, -3.473506e-002, 2.096636e-002, 9.849028e-003, 1.077327e-002, 2.123631e-002, -7.464306e-003, -4.690046e-003, 4.396333e-003, -2.799004e-002, -1.322002e-002, 2.236640e-002, 4.505863e-003, -1.507816e-002, -1.391294e-002, -3.100472e-002, -4.760392e-002, -3.270894e-002, -1.801886e-002, 3.748685e-003, 1.971040e-002, 3.206605e-002, 3.496071e-002, 2.373087e-002, 1.002860e-002, 8.086775e-003, 8.787634e-003, 9.299897e-003, 7.169412e-003, 6.015197e-003, 1.102853e-003, -4.399757e-003, -3.392600e-003, -1.864430e-003, 2.348518e-004, 5.503713e-003, 6.121732e-003, 2.013840e-003, -7.422239e-003, -2.209804e-002, -3.209667e-002, -2.439301e-002, -2.644083e-002, -3.388516e-002, -1.670710e-002, 2.463203e-002, 3.548438e-005, -3.394894e-002, 1.198526e-002, 1.146887e-003, 6.508683e-003, 2.287758e-002, -1.576888e-002, 1.518348e-003, 9.506512e-003, -2.063504e-002, 6.851387e-004, 2.994297e-002, 2.764695e-003, -1.453437e-002, -7.598131e-003, -2.637570e-002, -4.775000e-002, -3.053916e-002, -7.379871e-003, 1.598802e-002, 3.320226e-002, 3.650494e-002, 2.936242e-002, 1.295265e-002, -5.757299e-003, -8.716204e-003, -4.582081e-003, -1.566501e-003, 1.767576e-003, 8.093357e-003, 7.981307e-003, 1.748232e-003, 1.352644e-003, 1.164864e-003, 4.656582e-004, 4.439643e-003, 7.213645e-003, 2.141621e-003, -4.995823e-003, -1.545501e-002, -2.876504e-002, -2.961885e-002, -2.546655e-002, -2.400566e-002, -1.119272e-002, 1.850840e-002, 1.169465e-003, -2.467521e-002, 3.220787e-003, -1.937083e-002, 2.828468e-003, 3.079341e-002, -2.100653e-002, 8.063839e-003, 1.604439e-002, -3.749997e-003, 1.456292e-002, 2.898242e-002, -6.072387e-004, -1.016006e-002, 3.048129e-003, -1.197161e-002, -2.914564e-002, -1.084583e-002, 1.461715e-002, 2.773259e-002, 2.928986e-002, 1.802377e-002, 1.002584e-003, -1.502392e-002, -2.498760e-002, -2.530948e-002, -1.571288e-002, -7.097464e-003, 1.151026e-003, 1.150986e-002, 1.448741e-002, 8.894135e-003, 4.904884e-003, 1.076867e-003, -3.853885e-003, -2.260221e-003, -3.271062e-003, -6.400729e-003, -1.055138e-002, -9.504506e-003, -1.371705e-002, -2.033661e-002, -1.141794e-002, -1.005165e-002, -4.509089e-003, 1.595958e-002, 2.041998e-004, -1.221553e-002, -4.165143e-003, -3.767253e-002, -1.811761e-003, 3.017596e-002, -1.923819e-002, 1.248204e-002, 1.538232e-002, 3.540940e-003, 1.160113e-002, 2.253719e-002, -5.802365e-004, -1.998887e-003, 2.235350e-002, 1.345106e-002, -5.633923e-004, 1.719897e-002, 3.805295e-002, 4.151817e-002, 2.557917e-002, -1.765785e-003, -2.768991e-002, -4.700186e-002, -5.274001e-002, -4.224431e-002, -2.277926e-002, -3.726382e-003, 1.010547e-002, 2.217816e-002, 2.464376e-002, 1.302264e-002, 2.257876e-003, -5.669885e-003, -1.107273e-002, -1.186756e-002, -1.430992e-002, -1.307361e-002, -8.665677e-003, -2.969056e-003, 5.254765e-003, -6.997931e-004, 7.700648e-003, 1.053431e-002, 1.320879e-002, 1.856193e-002, 5.528274e-003, 2.484313e-004, -5.767916e-004, -4.485421e-002, -6.927041e-003, 2.101676e-002, -8.605889e-003, 1.409569e-002, 1.122487e-002, 2.947834e-004,

© ISO/IEC 2004 — All rights reserved


--`,,```,,,,````-`-`,,`,,`,`,,`---
Copyright International Organization for Standardization
Provided by IHS under license with ISO
No reproduction or networking permitted without license from IHS
Not for Resale

6.576215e-003, 1.899388e-002, 3.365131e-003, 1.065595e-002, 4.876728e-002, 3.556624e-002, 1.440317e-002, 2.931721e-002, 4.937555e-002, 5.493974e-002, 4.547391e-002, 1.995088e-002, -8.186914e-003, -4.192350e-002, -6.803430e-002, -6.474261e-002, -3.881695e-002, -1.040539e-002, 1.024805e-002, 2.369301e-002, 2.099296e-002, 1.990576e-003, -1.493101e-002, -2.315623e-002, -2.673010e-002, -2.011516e-002, -1.294065e-002, -3.309776e-003, 4.569902e-003, 1.183994e-002, 1.960953e-002, 1.203556e-002, 2.443449e-002, 2.987847e-002, 3.350323e-002, 2.479462e-002, 1.227500e-002, 7.343237e-003, -1.364174e-004, -4.166696e-002, -7.913187e-003, 1.309307e-002, -3.218141e-003, 1.026813e-002, 2.461337e-003, 2.442588e-003, 1.447546e-003, 1.357826e-002, 1.141160e-002, 2.352396e-002, 5.705925e-002, 3.433112e-002, 7.058764e-003, 2.403684e-002, 3.991528e-002, 4.552121e-002, 3.769148e-002, 2.095633e-002, 3.366914e-003, -2.202706e-002, -4.610754e-002, -5.631806e-002, -4.932457e-002, -2.133154e-002, 2.337166e-003, 1.428918e-002, 2.456166e-003, -2.594841e-002, -4.092754e-002, -4.148131e-002, -3.151618e-002, -2.282254e-002, -6.339195e-003, 8.464153e-003, 1.650956e-002, 2.300700e-002, 2.909654e-002, 9.717943e-003, 1.625724e-002, 3.267170e-002, 3.861286e-002, 2.593560e-002, 1.868059e-002, 1.343292e-002, -3.272036e-003, -3.911391e-002, -1.331935e-002, 2.148121e-003, 5.321529e-003, 4.775667e-003, -1.271867e-002, -2.401267e-003, 1.375345e-003, 6.594294e-003, 1.681417e-002, 2.932014e-002, 4.725323e-002, 1.762811e-002, 4.351011e-003, 3.397550e-002, 5.306403e-002, 3.006185e-002, -1.529391e-003, -2.258212e-002, -2.221741e-002, -1.207473e-002, -1.232640e-002, -2.230478e-002, -2.372038e-002, -5.020035e-003, 1.266028e-002, 1.438485e-002, -3.261970e-003, -2.539386e-002, -1.744534e-002, -1.733508e-003, -5.811972e-003, -2.333376e-002, -3.096794e-002, -3.397027e-002, -2.234032e-002, -4.097240e-003, 1.001274e-002, 6.492481e-003, 4.536783e-003, 1.027831e-002, 1.871905e-002, 1.606679e-002, 1.484406e-002, 5.974646e-003, -8.082167e-004, -1.547452e-002, -1.298304e-002, -1.800552e-002, 2.286110e-002, -1.583786e-003, -1.948795e-002, -9.029038e-003, 8.346905e-004, 1.488021e-003, 1.096475e-002, 1.219744e-002, 2.374312e-002, 8.113495e-003, 1.234737e-002, 4.255395e-002, 3.241292e-002, -6.545285e-003, -3.808020e-002, -4.931274e-002, -4.248834e-002, -1.944010e-002, 9.111597e-003, 2.536095e-002, 1.872218e-002, 1.462774e-002, 2.476033e-002, 2.161611e-002, 1.377066e-002, 1.331883e-002, 3.750424e-002, 4.724412e-002, 2.603071e-002, -1.342187e-002, -4.471187e-002, -6.387711e-002, -7.038198e-002, -5.845546e-002, -3.365070e-002, -2.189915e-002, -4.739571e-003, -8.868947e-003, -1.735979e-002, -6.392174e-003, -4.994665e-003, -1.922906e-002, -7.444353e-003, 2.316634e-003, -8.696283e-003, -3.151433e-002, 2.687618e-002, -3.093079e-003, -1.706667e-002, -5.564420e-003, 4.060377e-003, -7.080194e-003, -1.785306e-003, -1.059641e-002, -1.274137e-002, -2.291486e-002, 7.221422e-003, 2.748897e-002, -5.744461e-003, -4.160088e-002, -3.358954e-002, -2.820842e-002, -2.222062e-002, 1.238126e-003, 2.890388e-002, 4.413232e-002, 4.708714e-002, 1.973549e-002, 9.209708e-003, -3.562805e-003, 5.809260e-003, 3.360959e-002, 6.023597e-002, 7.093014e-002, 6.928578e-002, 6.003204e-002, 3.617407e-002, 1.650171e-002, -9.295494e-004, -1.949661e-002, -3.112403e-002, -3.297966e-002, -3.002458e-002, -4.169731e-002, -6.109480e-002, -4.194381e-002, -2.199184e-002, -2.489631e-002, -8.392726e-003, 1.495632e-002, -8.086544e-003, -1.970910e-002, 2.350425e-002, -1.622186e-003, 3.051588e-003, 3.177007e-003, 5.683237e-003, -6.339873e-003, -7.298001e-003, -2.075573e-002, -3.671134e-002, -4.139606e-002, -1.380585e-002, -1.736314e-002, -7.266248e-002, -6.600231e-002, -3.249202e-002, -2.451295e-002, -4.148835e-002, 1.145416e-002, 3.219534e-002, 3.510027e-002, 4.658798e-002, 2.991843e-002, 1.343215e-003, -2.052579e-002, -5.335341e-003, 3.537366e-002, 4.631463e-002, 4.321742e-002, 3.865261e-002, 5.888801e-002, 2.941098e-002, 2.988259e-002, 5.105532e-002, 1.271654e-002, -3.161660e-002, -4.259761e-002, -2.351545e-002, -3.330403e-002, -5.861307e-002, -3.277962e-002, -1.470917e-002, -1.777269e-002, 3.262310e-003, 2.413875e-002, -6.527263e-004, -1.822275e-002, 1.262723e-002, 4.869381e-003, 2.657357e-002, 1.307622e-002, 8.705274e-003, 4.665268e-003, 2.205339e-003, -2.482400e-002, -3.212667e-002, -3.312963e-002, -2.640336e-002, -4.749958e-002, -9.406651e-002, -6.619124e-002, -2.330904e-002, -5.873181e-002, -5.499239e-002, -7.838998e-003, -1.038059e-002, -1.507969e-002, -2.274396e-004, 1.975711e-002, -2.857330e-003, -2.079563e-002, -1.598054e-002, 6.429714e-003, -7.314913e-003, -1.955051e-002, -1.311061e-002, -1.107926e-002, -4.763828e-002, -3.645264e-002, 1.164563e-002, -3.031561e-003, -3.954622e-002, -3.800098e-002, -4.261023e-003, 9.645018e-003, -2.026313e-002, 2.692031e-003, 3.840550e-004, -4.680594e-003, 2.043201e-002, 2.998509e-002, 5.281770e-003, -1.560114e-002, 5.491906e-003, 7.719628e-003, 4.460866e-002, 2.604993e-002, 1.172125e-002, 7.053745e-003, 1.556740e-003, -1.687345e-002, -4.909925e-003, 3.127986e-003, -9.310409e-003, -1.817975e-002, -3.848584e-002, -2.314902e-002, 6.598670e-003, 1.094593e-002, 1.263381e-002, 6.138953e-003, -1.827997e-002, -4.133568e-002, -2.867737e-002, -2.752479e-004, -6.065246e-003, -2.022938e-002, -2.573794e-002, -8.793234e-003, -3.704937e-002, -3.713719e-002, -1.116725e-002, 1.533773e-002, 2.831433e-002, 4.407928e-002, 5.084383e-002, 2.827840e-002, -1.856761e-002, -2.835810e-002, 1.054957e-002, 1.990965e-002, -2.007133e-002, 1.094287e-003, 8.847165e-003, 8.758405e-004, 2.741562e-002, 2.038697e-002, 7.155668e-003, 7.158831e-003, -5.100804e-003, 6.667630e-003, 4.770721e-002, 1.564360e-002, -3.893656e-003, 1.188572e-003, -1.589755e-003, -1.150448e-002, 3.490333e-003, 1.715717e-002, 9.010985e-003, 3.613582e-003, -7.579384e-003, 5.709273e-003, 3.546163e-002, 4.769379e-002, 3.821492e-002, 9.878010e-003, -3.683123e-002, -6.886595e-002, -


© ISO/IEC 2004 — All rights reserved

Copyright International Organization for Standardization
Provided by IHS under license with ISO
No reproduction or networking permitted without license from IHS
Not for Resale

3.825825e-002, 1.450230e-003, -6.163110e-003, -1.609674e-002, -1.697560e-002, -8.715570e-003, -4.476064e-002, -5.576143e-002, -9.676788e-003, 3.433774e-002, 6.575916e-002, 8.219344e-002, 7.787111e-002, 4.941008e-002, -4.602831e-004, -1.637775e-002, 2.374977e-002, 3.332743e-002, -1.159715e-002, -1.124574e-003, 5.365751e-003, 3.125788e-003, 2.898796e-002, 1.061163e-002, 5.019063e-003, 1.982304e-002, -2.261974e-002, -8.089259e-004, 2.782511e-002, -9.253825e-003, -2.008226e-002, -7.671567e-004, 4.418964e-004, -9.375157e-003, 4.740340e-003, 1.646376e-002, 2.209257e-002, 9.660431e-003, 2.820121e-004, 8.722133e-003, 3.259089e-002, 3.931721e-002, 1.828628e-002, -1.972837e-002, -5.526200e-002, -6.153015e-002, -1.708804e-002, 8.381479e-003, -7.060474e-003, -1.816630e-002, -9.366453e-003, -1.590613e-003, -2.259795e-002, -5.905892e-002, -3.003461e-002, 1.402339e-002, 5.019968e-002, 6.896973e-002, 6.774828e-002, 4.217276e-002, 7.267311e-003, 1.593692e-003, 4.072582e-002, 4.452944e-002, 5.927001e-003, 6.249268e-003, 7.225145e-003, -3.290296e-003, 1.496003e-002, -1.513233e-003, -2.667502e-003, 2.052191e-002, -3.254120e-002, -1.291979e-002, 1.840642e-003, -2.212316e-002, -1.958621e-002, 3.787602e-003, 2.521641e-003, -8.748725e-003, 6.660359e-003, 1.674464e-002, 2.758105e-002, 1.635550e-002, 4.223199e-004, -3.374221e-003, 9.325236e-003, 4.274153e-003, -1.921715e-002, -4.430737e-002, -4.986438e-002, -2.523087e-002, 1.422509e-002, 1.243127e-002, -7.381271e-003, -1.710989e-002, -9.536923e-003, 5.251702e-003, 1.332383e-002, -1.988952e-002, -3.404668e-002, -1.227014e-002, 1.783451e-002, 4.043949e-002, 4.344070e-002, 3.541753e-002, 1.827499e-002, 1.665368e-002, 4.655097e-002, 4.658980e-002, 1.224986e-002, 2.535734e-003, -7.100792e-003, -7.239746e-003, 1.476040e-002, 1.203641e-003, 5.167239e-003, 1.304021e-002, -3.694764e-002, -4.647058e-003, -2.280350e-002, -2.875276e-002, -1.074846e-002, 4.975856e-003, 1.470659e-003, -7.177325e-003, 7.084760e-003, 1.915132e-002, 2.044335e-002, 1.885259e-002, 2.214061e-003, -8.505575e-003, -1.272895e-002, -2.453489e-002, -3.597288e-002, -3.220478e-002, -1.537826e-002, 2.824728e-002, 3.306144e-002, 7.484703e-003, -8.779107e-003, -7.911447e-003, -6.143902e-003, 3.706075e-003, 2.444299e-002, 3.526831e-002, 7.493281e-003, -8.293008e-003, -2.794333e-003, 1.254973e-002, 2.425795e-002, 2.838731e-002, 2.143851e-002, 2.278998e-002, 3.697730e-002, 4.064722e-002, 1.226627e-002, -3.192220e-003, -1.395538e-002, -7.149716e-003, 1.174338e-002, 3.999676e-003, 1.517096e-002, 9.461163e-003, -6.080893e-003, 1.675162e-003, -2.412584e-002, -2.222631e-002, -4.367095e-003, 7.917019e-003, 1.171187e-002, -6.039541e-003, -3.370187e-003, 1.672546e-002, 1.807304e-002, 7.351496e-003, -4.750571e-003, -1.835235e-002, -2.206480e-002, -2.899808e-002, -2.688198e-002, -1.036369e-002, 2.486682e-002, 4.228024e-002, 2.846649e-002, -3.203560e-003, -1.473246e-002, 7.663778e-004, 9.931739e-003, 6.927073e-003, 1.477294e-002, 4.984059e-002, 3.723538e-002, 9.329406e-003, 2.594698e-004, 6.203448e-003, 1.387967e-002, 2.031406e-002, 1.463761e-002, 9.873398e-003, 2.284005e-002, 2.437128e-002, 9.649369e-003, 7.288892e-004, -1.887875e-002, -1.062767e-002, 5.878247e-003, 6.322872e-003, 1.335804e-002, -7.425605e-003, 2.988339e-003, 1.846128e-003, -2.035604e-002, -1.938752e-002, -7.226616e-003, 9.873576e-003, 2.155623e-002, -4.180130e-003, -7.415825e-003, 6.094356e-003, 9.398542e-003, -4.280808e-003, -1.981880e-002, -2.675004e-002, -3.192107e-002, -3.232193e-002, -1.594766e-002, 1.714320e-002, 3.193057e-002, 3.178669e-002, 4.191559e-002, 1.135133e-002, -4.029282e-003, 1.298979e-002, 1.782607e-002, 1.091338e-002, 7.033213e-003, 4.022877e-002, 3.254111e-002, 1.370365e-004, -1.335888e-002, -1.380682e-002, -9.442292e-003, -7.547274e-003, -8.331720e-003, -1.689496e-003, 1.111496e-002, 1.012989e-002, 1.318600e-002, 9.976306e-003, -2.114609e-002, -5.450100e-003, 4.801621e-003, 5.845177e-003, 7.469151e-003, -3.583396e-002, 2.535398e-003, -8.028954e-004, -1.724432e-002, -1.734750e-002, -1.284877e-002, -3.451110e-003, 1.511485e-002, 7.668975e-004, -7.500234e-003, 2.947576e-003, -4.379659e-004, -1.242164e-002, -2.877369e-002, -3.846869e-002, -3.955402e-002, -3.002212e-002, -4.403944e-003, 2.022763e-002, 1.479321e-002, 2.829274e-002, 5.706271e-002, 1.046710e-002, 2.192787e-003, 1.063382e-002, 1.126283e-002, 1.167240e-002, 4.327816e-003, 2.301072e-002, 2.982726e-002, 1.306301e-003, -2.211153e-002, -3.170449e-002, -3.385071e-002, -3.036782e-002, -2.328993e-002, -1.071536e-002, -5.658892e-004, -2.108339e-003, 1.303574e-002, 1.233650e-002, -1.078348e-002, 6.582996e-003, 1.793067e-003, -5.748757e-004, -1.496519e-002, -3.415720e-002, 1.458599e-003, -1.110196e-003, -5.664230e-003, -6.075419e-003, -1.127011e-002, -2.010457e-002, -8.810693e-003, -4.045582e-003, -1.121455e-002, 3.171833e-003, -1.537694e-003, -1.641770e-002, -2.892652e-002, -3.093656e-002, -2.796017e-002, -1.009339e-002, 1.947837e-002, 1.840126e-002, -2.827533e-003, 1.060984e-002, 1.960758e-002, -1.357036e-002, 1.107229e-002, 3.006301e-002, 2.059702e-002, -7.171319e-004, -1.728273e-002, -3.160784e-003, 1.363501e-002, 1.365402e-002, -2.816044e-003, -1.735132e-002, -2.558790e-002, -2.988642e-002, -2.694392e-002, -1.621220e-002, -1.215153e-002, -6.854796e-003, 1.392279e-002, 6.137220e-003, -2.856264e-003, 1.107782e-002, 4.959156e-003, -6.984377e-003, -1.567806e-002, -3.024459e-002, 7.379204e-003, 5.467739e-004, 8.530092e-003, 1.953544e-002, 3.679950e-003, -2.308339e-002, -2.991537e-002, -1.602013e-002, -1.711147e-002, 2.164219e-003, -3.900781e-003, -1.646148e-002, -2.331058e-002, -1.893518e-002, -7.199918e-003, 1.976283e-002, 3.593057e-002, 1.559111e-002, -6.029816e-003, 4.078336e-003, 7.687165e-003, 1.302955e-002, 4.531894e-002, 5.175902e-002, 3.205154e-002, 1.758406e-002, -8.294797e-003, -1.293400e-002, 9.673998e-003, 3.239415e-002, 2.737466e-002, 4.358412e-003, -1.116235e-002, -2.245428e-002, -2.314266e-002, -1.500678e-002, -

© ISO/IEC 2004 — All rights reserved


Copyright International Organization for Standardization
Provided by IHS under license with ISO
No reproduction or networking permitted without license from IHS
Not for Resale

1.738309e-002, -1.220742e-002, 1.178074e-002, -3.833605e-003, -8.452390e-004, 1.984968e-002, -1.479666e-003, -6.802216e-003, -1.395775e-002, -1.195454e-002, 9.393611e-003, 8.465499e-004, 1.231416e-002, 3.359628e-002, 2.553554e-002, -1.291373e-002, -2.744941e-002, -1.496593e-002, -1.136891e-002, 3.077466e-003, -9.111223e-003, -1.732701e-002, -2.005325e-002, -7.671940e-003, 1.712247e-002, 4.232567e-002, 3.610213e-002, 7.842376e-003, -9.198398e-003, -7.820046e-003, -2.383088e-003, 1.174453e-002, 3.422374e-002, 2.995579e-002, 1.069298e-004, -1.021034e-002, -1.843634e-002, -1.059844e-002, 1.496536e-002, 3.816552e-002, 4.082200e-002, 2.292827e-002, -1.669313e-003, -1.596003e-002, -1.660448e-002, -1.524940e-002, -2.209930e-002, -2.018336e-002, 7.252756e-004, -1.033439e-002, -5.785723e-004, 8.206163e-003, -1.610683e-002, -2.725829e-004, -5.119349e-003, 1.115852e-002, 1.415380e-002, 4.354816e-003, 6.861897e-003, 3.062380e-002, 3.046894e-002, -1.559662e-003, -5.611646e-003, 8.495438e-003, -3.041156e-003, -6.020651e-004, -1.151394e-002, -2.127253e-002, -1.769432e-002, -4.361040e-004, 2.616655e-002, 3.751642e-002, 2.331569e-002, 3.681179e-003, -1.361450e-002, -2.361498e-002, -2.103097e-002, -1.040436e-002, 3.900274e-003, -2.483106e-003, -2.322797e-002, -3.400726e-002, -4.254590e-002, -2.366383e-002, 6.521016e-003, 2.652555e-002, 3.421993e-002, 2.797505e-002, 4.128525e-003, -1.417681e-002, -1.538165e-002, -1.785439e-002, -2.342151e-002, -1.364235e-002, 1.034939e-002, -1.069958e-002, -7.611761e-003, -1.220881e-002, -1.714365e-002, 3.523263e-003, 9.711258e-003, 2.490267e-002, 1.543125e-002, 2.419480e-002, -2.360833e-003, 1.755464e-002, 2.434965e-002, 8.012101e-003, 2.617041e-002, 4.141006e-002, 1.215164e-002, 2.417329e-003, -9.499898e-003, -2.366670e-002, -1.928000e-002, -6.871234e-003, 1.378551e-002, 1.064143e-002, 9.371643e-003, 2.820395e-003, -6.098632e-003, -1.938541e-002, -2.001384e-002, -1.258403e-002, -7.747163e-004, -5.942458e-005, -1.012753e-003, -9.927361e-003, -2.093382e-002, -1.553447e-002, -3.959226e-003, 1.809307e-003, 6.771339e-003, 8.651713e-003, 1.062591e-003, -1.268955e-002, -1.335925e-002, -2.207331e-002, -1.960716e-002, -4.510683e-003, 2.513197e-002, -4.573922e-003, -1.578543e-003, -1.656050e-002, -1.659980e-002, 1.093102e-002, 2.125783e-002, 2.520065e-002, 2.668174e-002, 1.319915e-002, -1.427765e-002, -1.097362e-003, 1.630456e-002, 8.879386e-003, 3.145445e-002, 5.022916e-002, 1.564169e-002, 5.785527e-003, -5.423145e-003, -2.403318e-002, -2.425610e-002, -2.008872e-002, -1.050271e-002, -1.826666e-002, -7.937860e-003, -1.562111e-003, 1.892172e-004, -6.191166e-003, -1.829158e-002, -1.556342e-002, -6.766868e-003, -3.995209e-003, 8.811002e-003, 5.641090e-003, -1.693536e-003, 3.968526e-003, 6.199143e-003, -1.607227e-002, -2.777133e-002, -2.595799e-002, -1.694746e-002, -1.864074e-002, -1.356215e-002, -2.455037e-002, -1.787528e-002, 8.585633e-003, 2.128937e-002, -3.031754e-004, 6.693905e-003, -1.677051e-002, -1.742763e-002, 5.203268e-003, 1.258288e-002, 9.254542e-003, 2.608163e-002, 9.845736e-003, -1.493811e-002, -3.821802e-003, 1.177469e-002, 8.112453e-003, 1.139208e-002, 3.419250e-002, 1.164118e-002, -1.746997e-003, 1.198188e-003, -2.127249e-002, -2.646710e-002, -2.633135e-002, -2.314667e-002, -2.419104e-002, -1.524114e-002, -1.136896e-002, -8.016617e-003, -3.487135e-003, -4.771880e-003, 3.849063e-003, 1.327792e-002, 1.437918e-002, 2.418462e-002, 1.985090e-002, 1.655274e-002, 1.995584e-002, 1.036823e-002, -1.468801e-002, -4.223069e-002, -4.619448e-002, -3.144011e-002, -1.851963e-002, -1.372658e-002, -2.131848e-002, -9.866877e-003, 1.036806e-002, -3.239128e-003, -6.439422e-003, 7.323208e-003, -1.452405e-002, -1.014016e-002, -3.351016e-005, -4.782002e-003, -5.864520e-004, 1.951646e-002, 4.556516e-003, -1.851087e-002, -1.028519e-003, 1.165982e-002, 4.775915e-003, -1.153512e-002, 6.926599e-003, 9.184210e-003, -2.287466e-003, 3.987466e-003, -1.072086e-002, -2.210639e-002, -2.221471e-002, -1.918733e-002, -1.066384e-002, -1.897212e-002, -2.785196e-002, -1.713549e-002, -3.199421e-003, 2.329778e-003, 7.450597e-003, 1.395799e-002, 1.107059e-002, 8.774136e-003, -6.217847e-007, 2.269525e-003, 2.069307e-003, -1.672938e-003, -1.092658e-002, -2.629768e-002, -3.313888e-002, -2.754520e-002, -1.433396e-002, -1.130180e-002, -1.544142e-002, 1.323255e-003, 4.492400e-003, -2.302611e-002, 5.355222e-004, 1.337302e-002, -3.652078e-003, -8.162923e-003, 3.686006e-003, -1.680035e-004, 3.603075e-003, 1.233108e-002, 3.943848e-004, -2.258821e-002, -8.380850e-003, 4.797929e-003, 5.058173e-004, -2.140797e-002, -8.410548e-003, 8.054119e-003, 2.859617e-003, 3.719842e-003, 1.894296e-003, -1.221169e-002, -1.304563e-002, -3.997627e-003, 1.306810e-002, 1.421295e-002, 1.187119e-002, 1.848670e-002, 2.473551e-002, 2.711638e-002, 2.021123e-002, 8.598564e-003, -1.485090e-003, -5.714823e-003, -1.183187e-002, -1.080154e-002, -1.113002e-002, -5.463458e-003, 4.312361e-003, 1.151309e-004, -1.231172e-002, -1.888314e-002, -1.162217e-002, -7.791960e-003, -4.835258e-003, 1.085034e-002, -1.408251e-002, -3.575507e-002, 1.716135e-003, 1.238819e-002, -2.391530e-003, -5.228326e-003, -3.221923e-003, 9.578864e-003, 8.750129e-003, 1.693883e-003, -7.268554e-003, -2.780670e-002, -1.747289e-002, -2.781902e-003, -2.909713e-003, -1.895734e-002, -1.563689e-002, 6.144967e-003, 6.811354e-003, -2.399880e-003, 1.117414e-002, 2.623009e-003, -2.781614e-003, 1.221400e-002, 3.629853e-002, 3.758882e-002, 3.298968e-002, 2.881977e-002, 2.613452e-002, 2.854980e-002, 2.817472e-002, 1.987505e-002, 1.518078e-002, 1.328124e-002, 5.290943e-003, -1.944208e-004, 3.437759e-003, 8.375178e-003, 1.303934e-002, 1.064166e-002, -1.090948e-003, -1.544246e-002, -1.137440e-002, -2.315209e-003, 8.468205e-003, 1.471397e-002, -1.831343e-002, -1.246024e-002, 7.792732e-003, 6.304251e-003, -1.180773e-002, -8.831931e-003, -4.625035e-003, 1.337661e-002, 1.315688e-002, -1.605948e-002, -9.100227e-003, -2.397748e-002, -1.516066e-002, -5.453891e-003, 2.358164e-003, -


© ISO/IEC 2004 — All rights reserved

Copyright International Organization for Standardization
Provided by IHS under license with ISO
No reproduction or networking permitted without license from IHS
Not for Resale

1.448608e-002, -2.394789e-002, -2.199330e-003, 3.219107e-003, -8.679162e-003, 6.436917e-003, 3.648470e-003, -5.406532e-003, 8.745883e-003, 3.460398e-002, 3.534054e-002, 2.181712e-002, 1.091384e-002, 1.222603e-002, 1.528761e-002, 1.068198e-002, 2.365798e-003, -1.248413e-004, -2.215663e-003, -4.874205e-003, -5.116081e-003, 6.052462e-004, 5.557820e-003, 1.165860e-002, 9.226799e-003, -4.784472e-003, -1.377631e-002, -7.175441e-003, 3.543960e-003, 1.896170e-002, 1.345784e-002, -6.483588e-003, 1.637734e-002, 9.696212e-003, 5.077190e-003, -1.472619e-002, -1.558496e-002, -4.925025e-003, 1.613858e-002, 1.986135e-002, -2.408399e-002, -1.250563e-002, -1.187017e-002, -1.043124e-002, -8.738887e-003, -2.388458e-003, -1.701403e-002, -1.896456e-002, -6.876346e-003, 6.574026e-005, -1.141906e-002, -1.846135e-003, 3.880720e-003, -1.866741e-003, 5.053348e-003, 2.241229e-002, 2.770150e-002, 2.022783e-002, 1.396094e-002, 9.736044e-003, 1.488225e-002, 9.283297e-003, -1.582822e-003, -4.560135e-003, -6.306887e-003, -3.538527e-003, 4.309070e-003, 8.198681e-003, 1.113406e-002, 1.077315e-002, 6.073727e-003, -4.923066e-003, -8.994305e-003, -5.322722e-003, 7.878506e-003, 2.471606e-002, 1.463954e-002, 1.898943e-002, 1.668630e-002, 1.383875e-003, 1.064033e-003, -1.416338e-002, -1.213687e-002, 2.126154e-005, 1.490683e-002, 1.872507e-002, -2.841512e-002, -4.836890e-003, 2.546410e-002, -9.190297e-003, -1.466150e-002, -1.140903e-002, -1.034871e-002, -1.290800e-002, -1.608324e-002, -7.929765e-003, -1.635454e-002, -5.337301e-003, 2.999143e-003, 2.122454e-004, 5.255822e-003, 1.442999e-002, 1.542194e-002, 1.595149e-002, 1.543128e-002, 1.095122e-002, 1.314036e-002, 7.783320e-003, -2.597105e-003, -1.461435e-003, -4.383431e-004, 5.763589e-003, 1.450706e-002, 1.720057e-002, 2.055316e-002, 1.662057e-002, 6.154566e-003, 6.821829e-004, -2.178560e-003, -3.703810e-003, 2.527842e-003, 1.045580e-002, 1.363993e-002, 3.066411e-002, 1.335151e-002, -3.716366e-003, -2.900840e-003, -4.844767e-003, -9.268446e-003, -2.935450e-004, 1.254565e-002, 1.078663e-002, -2.458130e-002, 7.137673e-003, 3.481405e-002, -8.612679e-003, -1.587315e-002, -1.170953e-002, -5.398781e-003, -1.127210e-002, -1.247328e-002, -9.842133e-003, -1.260294e-002, 9.616546e-004, 3.972853e-004, 3.627466e-003, 9.983580e-003, 1.314421e-002, 4.597711e-003, 1.064167e-003, 1.878683e-004, -2.567181e-003, -5.760241e-003, -1.366504e-002, -1.777143e-002, -1.344744e-002, -7.798117e-003, 1.476235e-004, 7.206893e-003, 1.513738e-002, 2.187396e-002, 1.580498e-002, 9.952092e-003, 6.058527e-003, -2.636270e-003, -7.879762e-003, -9.329856e-003, -3.625401e-004, 1.611138e-002, 2.292214e-002, -2.828176e-003, -1.043907e-002, 7.792105e-003, 4.430093e-003, -2.341164e-003, -5.263152e-003, 5.810006e-003, 2.299129e-003, -2.470373e-002, 1.054461e-002, 3.472700e-002, -3.652298e-003, -8.743396e-003, 6.755853e-003, 8.658421e-003, 3.694840e-003, -1.236615e-004, -9.010940e-003, 7.893337e-004, 4.608927e-003, -2.813845e-003, 3.409793e-003, 7.507908e-003, 6.785283e-003, -4.641336e-003, -1.259514e-002, -1.235448e-002, -1.290329e-002, -1.945908e-002, -2.736405e-002, -2.895539e-002, -2.292722e-002, -1.803616e-002, -1.311580e-002, -6.115216e-003, 8.480690e-003, 1.376876e-002, 1.041919e-002, 7.515645e-003, 7.051075e-003, 3.463523e-003, -4.592116e-003, -8.575292e-003, -3.674723e-003, 1.309423e-002, 1.156856e-002, -1.643472e-002, -1.562959e-002, 1.654010e-002, 2.022763e-002, 6.994792e-003, -3.792891e-003, -4.879768e-003, -2.338122e-003, -1.838865e-002, 1.306165e-002, 3.348282e-002, 2.257307e-003, 8.681113e-003, 2.091832e-002, 2.169403e-002, 1.363762e-002, 1.105790e-002, -1.201072e-002, 4.250919e-003, 4.029180e-003, -7.391112e-003, 2.493565e-003, 9.993002e-003, 9.392568e-003, -6.730427e-003, -1.521061e-002, -6.965581e-003, -3.848175e-003, -6.399228e-003, -1.403969e-002, -1.404850e-002, -1.217450e-002, -8.936716e-003, -7.465828e-003, -3.952301e-003, 3.645245e-003, 4.497509e-003, 2.898292e-003, 9.373548e-003, 1.553989e-002, 1.378791e-002, 6.121682e-003, 8.136353e-003, 9.855241e-003, 8.341217e-003, 2.403240e-003, -1.768007e-002, -2.521499e-003, 2.970384e-002, 2.783040e-002, 1.746393e-002, 4.568120e-003, -1.928036e-003, -6.067358e-003, -2.261967e-002, -3.069993e-003, 1.717812e-002, -1.159967e-002, -5.598799e-003, 4.090389e-003, -2.298499e-003, -1.166399e-002, -1.323598e-002, -3.122934e-002, -1.328421e-002, -1.356923e-002, -1.939640e-002, -7.551879e-003, 3.223071e-003, -1.577252e-004, -1.459390e-002, -2.099307e-002, -1.026393e-002, 3.768510e-003, 7.426865e-003, 3.414049e-003, 2.159996e-003, 1.246213e-004, -3.152073e-003, -3.471262e-003, -8.850749e-003, -1.200992e-002, -1.490459e-002, -1.277805e-002, -2.096250e-003, 2.359909e-003, 9.033187e-003, 7.678509e-003, 1.220469e-002, 1.422872e-002, -3.760160e-004, -7.642904e-003, -1.435707e-002, -2.899738e-003, 9.166295e-003, 9.428345e-003, 6.956402e-003, 3.857149e-003, 7.213961e-003, 5.325485e-003, -2.264667e-002, -4.633332e-003, 1.827801e-002, -7.740351e-003, -2.663721e-003, -3.998116e-004, -6.937635e-003, -1.216933e-002, -4.247378e-003, -9.048453e-003, -6.946432e-003, -1.624136e-003, -1.590209e-002, -6.545664e-003, 5.944601e-003, 9.251490e-003, -6.160748e-003, -8.890668e-003, -3.945064e-003, 1.394097e-002, 2.366244e-002, 2.359979e-002, 2.367998e-002, 1.823733e-002, 1.088455e-002, 5.746353e-003, 2.175334e-003, -4.585512e-003, -4.667540e-003, 4.619758e-005, 7.375299e-003, 1.710775e-002, 2.190317e-002, 1.704416e-002, 2.211421e-002, 2.160690e-002, 6.952342e-003, 9.639710e-003, 2.797413e-002, 3.510673e-002, 1.590603e-002, -7.738422e-003, -1.448701e-002, -7.654707e-003, 9.376845e-003, 1.548482e-002, -1.949756e-002, -6.261980e-003, 1.108937e-003, 2.749122e-003, 2.665724e-003, 1.322361e-002, 3.780167e-004, 6.199458e-003, 3.550185e-002, 1.123544e-002, 4.928283e-003, 9.726633e-004, -1.438319e-002, -1.535507e-002, 6.684332e-003, 1.590810e-002, 4.540908e-003, -4.034110e-003, -1.134118e-002, -7.859609e-004, 3.241735e-003, 1.931655e-003,

© ISO/IEC 2004 — All rights reserved


Copyright International Organization for Standardization
Provided by IHS under license with ISO
No reproduction or networking permitted without license from IHS
Not for Resale

1.579759e-003, -2.922090e-003, -5.759837e-003, -6.831900e-003, -4.576398e-003, -2.805285e-003, -3.572902e-003, -7.338258e-003, -5.504120e-005, 7.186307e-003, 1.014110e-003, -1.169621e-004, 1.294304e-002, -4.307931e-004, -1.739662e-002, -5.844240e-003, 1.240746e-002, 2.347295e-002, 2.217774e-002, -7.460732e-003, -2.508627e-002, -2.686557e-002, -5.989053e-004, 1.918129e-002, -1.243148e-002, -2.132959e-003, -5.654236e-003, -6.386286e-003, -1.134421e-002, -1.233319e-002, -1.928624e-002, -5.435906e-003, 2.106980e-002, -5.472166e-004, -9.894039e-003, -1.180157e-002, -2.218636e-002, -1.699010e-002, 2.529157e-003, 2.345853e-002, 1.415241e-002, 1.743528e-003, -1.476486e-002, -1.055505e-002, -8.421928e-003, -1.061733e-002, -1.306544e-002, -1.407141e-002, -1.327498e-002, -7.798343e-003, -7.454750e-003, -1.184654e-002, -1.736110e-002, -1.966573e-002, -1.357996e-002, -1.157735e-002, -2.369703e-002, -1.804477e-002, -5.746748e-003, -1.587853e-002, -2.168395e-002, -1.347901e-002, -1.229292e-002, -1.719499e-002, -2.104262e-003, -8.946700e-004, -1.281545e-002, -2.120501e-002, 6.001468e-005, 1.201391e-002, 7.427189e-003, 5.827628e-003, -3.712228e-003, -7.749617e-003, -1.353294e-002, -1.305577e-002, -1.300724e-002, -6.266201e-003, 7.338473e-003, -5.604059e-003, -3.613975e-003, 8.119105e-003, 7.431859e-003, 3.938095e-003, 1.773439e-002, 3.832539e-002, 2.899575e-002, 1.016296e-002, -5.709633e-003, -8.271915e-003, -8.294020e-003, -3.852270e-003, -5.098722e-003, -3.767436e-003, -2.476722e-004, 4.471500e-003, 2.018428e-003, -2.378752e-003, -5.973595e-003, -1.488402e-002, -1.436570e-002, -1.578974e-002, -1.868417e-002, -7.682340e-003, 5.913587e-003, -2.135294e-003, -4.513230e-004, 4.801128e-003, -6.517788e-003, -2.359215e-002, -1.763566e-002, 4.736428e-003, 1.486672e-002, 3.946720e-003, 1.766137e-002, 1.210997e-002, 2.229014e-002, 2.181220e-002, 5.869905e-003, -8.731799e-003, -6.977170e-003, -3.514388e-003, -1.401090e-003, -1.166489e-004, 4.836187e-003, 1.690521e-003, 1.361156e-002, 2.268229e-002, 9.117810e-003, 4.525117e-003, 7.835743e-003, 1.483033e-002, 1.259349e-002, -4.998556e-003, -1.628191e-002, -1.600016e-002, -6.493813e-003, 6.171470e-003, 1.272476e-002, 1.711002e-002, 2.065339e-002, 2.147708e-002, 1.805435e-002, 1.339307e-002, 5.596968e-003, -4.020030e-003, 2.845065e-003, 9.596752e-004, 3.778709e-003, 1.381354e-002, 1.698991e-002, 1.908297e-004, 4.306954e-003, 1.483062e-002, 4.566665e-003, -3.204766e-003, 6.205343e-003, 2.071645e-002, 2.088686e-002, -2.165771e-004, 2.345474e-003, -3.116237e-003, -5.831216e-004, -4.061207e-003, -1.939707e-002, -2.841929e-002, -1.973397e-002, -8.909315e-003, -3.418981e-003, 5.180009e-003, 8.945862e-003, 1.272033e-002, 2.094440e-002, 3.098355e-002, 1.544778e-002, 1.147444e-002, 9.336500e-003, 7.073167e-003, 3.416790e-003, -9.325637e-003, -1.935604e-002, -2.195830e-002, -1.634260e-002, -7.139225e-003, 4.692003e-004, 5.883129e-003, 1.054247e-002, 1.470280e-002, 1.092206e-002, 5.115492e-003, 4.561765e-003, 7.622034e-003, 1.783038e-002, 1.592094e-002, 2.153598e-002, 2.180814e-002, 8.977815e-003, -2.074678e-002, -3.123045e-002, -1.969335e-002, -2.478762e-002, -2.534950e-002, -4.623338e-003, 1.549718e-002, 1.229082e-002, -3.412368e-003, -1.089505e-002, -3.329239e-002}
};

mean vector $\boldsymbol{m}^h$ [40]={
2.634190e+002, 6.570768e+001, 7.133635e+002, -8.367088e+001, 2.002625e+000, 1.616229e+002, 2.498775e+001, -1.002707e+002, 8.044273e+000, 6.419357e+000, -4.408838e+001, 3.509387e+001, -3.828269e+001, 4.174626e+001, -4.917828e+001, -5.839544e+001, 3.506603e-001, -2.901864e+001, 2.218062e+001, -3.406802e+001, 3.080941e+001, -3.253366e+001, -1.309822e+001, -1.602487e+001, 3.745661e+000, -1.856325e+001, 2.648012e+000, 2.023543e+001, -1.764511e+000, -3.215093e+000, 3.317989e+001, -2.932858e+001, -1.176161e+001, -7.160267e+000, -4.553215e+000, -1.157829e+001, 4.442371e+001, -8.787321e+000, -3.632857e+000, -1.497430e+001};

LDA basis matrix $\boldsymbol{\Psi}_2^h$ [63][190]={
{7.047711e+000, -2.816588e+000, 2.022443e+000, -1.505109e+000, 1.230625e+000, 1.301242e+000, -9.202237e-001, -4.366827e-003, -1.669250e+000, -1.465335e+000, -1.543628e-002, 1.672379e-001, 7.167762e-001, 1.091676e-002, 8.323923e-002, -1.638593e+000, -1.844158e+000, 2.754592e+000, 8.057753e-001, -1.536601e-001, 2.256852e+000, 4.146098e-001, 1.485688e+000, 2.944170e+000, -3.550336e-001, 7.750237e-001, -1.613887e+000, -2.733872e+000, 8.306292e-001, 1.238159e-001, -2.762720e+000, -9.608922e-001, -6.684846e-001, 2.613460e+000, -2.937368e-001, 1.326549e+000, -1.338081e+000, 1.776199e+000, -1.126472e-001, 1.411671e-001, -1.139630e+000, -4.690521e-001, 4.344497e-001, 1.327279e+000, -7.000863e-001, -3.354046e-001, -1.462609e+000, -2.325773e-001, 6.718499e-001, 7.523922e-001, -1.882652e-001, 6.875846e-001, 9.716952e-001, -1.354013e-001, -9.658926e-001, -5.281678e-001, 1.134705e+000, 8.775550e-001, -1.229880e-001, -1.439800e-001, 1.791079e-001, -1.155130e-002, 7.403869e-001, 3.336848e-001, -1.345445e+000, 1.728121e+000, -7.058569e-001, 6.466648e-001, 1.077539e+000, 5.701771e-001, 1.627089e+001, -3.730048e+000, 2.219610e+000, 1.515505e-001, 8.202024e-001, 1.252765e+000, -6.401527e-001, 3.083673e-001, -1.885062e+000, -4.498189e-001, 7.713917e-001, -9.811514e-001, 2.399619e-001, -1.592868e+000, 1.505491e+000, -1.315240e+000, 2.285326e-001,


© ISO/IEC 2004 — All rights reserved

Copyright International Organization for Standardization
Provided by IHS under license with ISO
No reproduction or networking permitted without license from IHS
Not for Resale

5.458966e-001, -1.179550e+000, -2.298895e+000, -1.648847e-001, 2.035451e+000, 1.565583e+000, 1.136265e+000, 8.188798e-001, -1.822156e+000, 7.353721e-001, 1.512468e-001, -1.341797e+000, 1.288844e+000, 6.807678e-001, -1.107383e+000, 4.872404e-001, 8.092145e-001, 3.308916e-001, -5.980405e-002, -3.817968e-001, -1.644975e-001, -3.913494e-001, 1.128256e+000, 1.189071e+000, -1.279916e+000, -3.467738e-001, -8.535260e-001, 8.557479e-001, -5.608300e-001, 1.187656e+000, 5.802906e-001, -3.373776e-001, -1.453107e+000, -5.413127e-001, -3.103984e-001, -1.413859e+000, 1.611558e-001, -8.259787e-001, -6.257649e-001, -4.318985e-003, 1.212457e+000, 3.485453e-001, 3.759206e-001, 1.628765e+000, 4.188685e-002, -1.266618e+000, -7.963085e-001, -4.376735e-001, 2.382632e-001, -1.221555e+000, 1.439529e-001, 5.905088e-001, 3.581127e-001, 1.460861e-001, 1.025537e+000, -7.739457e-002, 5.205492e-001, 8.579032e-001, 1.105599e+000, -3.381444e-001, 6.368581e-001, -1.110904e+000, -7.017837e-001, 8.819779e+000, 1.881237e+000, -1.941001e+000, 7.304154e-001, 1.180385e+000, 7.272000e-001, 1.310127e+000, 1.719015e+000, 1.352689e+000, -1.812575e-001, 1.358964e+000, -8.645574e-001, 1.204596e+000, -2.687185e-001, -3.957179e-001, 3.749656e-001, 5.366143e-001, -1.536114e+000, -5.058439e-001, 5.070124e-002, -3.868754e-001, -1.254970e-001, 1.266124e+000, 2.168688e-001, -1.018845e+000, 1.347599e+000, -1.052299e+000, -1.888873e-001, 3.594868e-001, -8.208637e-001, -2.603044e+000, -1.170232e+000, 2.626961e-001, -4.268895e-001, 1.041067e-001, 1.173872e+000, 3.743267e-001, -3.171731e-001, 4.404161e-002, 1.571005e-001},
{-7.008259e+000, -6.382714e+000, -5.349584e+000, 4.816323e+000, 2.186184e+000, -9.617816e-001, -3.790723e+000, -2.015468e-001, 1.585955e+000, -1.723298e+000, -2.917127e+000, 2.577703e+000, 3.778170e-001, -3.309328e+000, 8.986391e-001, -9.168823e-001, 7.030093e-001, -1.540377e-001, -6.692706e-001, -1.211272e+000, 3.530094e+000, -5.875705e-001, 4.614389e+000, 4.061145e+000, -8.411971e-001, 2.886043e+000, -6.292744e+000, 2.684504e+000, 2.179171e+000, 3.793431e+000, -1.514544e+000, -3.159450e-001, -2.315353e+000, 1.557806e+000, -7.552746e-001, 1.208115e-001, -2.536678e+000, 5.439538e+000, -2.083315e+000, 2.649155e+000, -1.389320e+000, 2.499176e+000, 1.794914e-001, -2.528640e+000, -5.188476e-001, -6.715271e-001, 2.022836e-001, -1.361063e+000, -1.134953e+000, 1.504736e-001, 2.469589e+000, -8.237503e-001, 8.923151e-001, -1.083466e+000, -1.137691e+000, 2.445876e+000, 1.123757e+000, -3.961340e-001, 1.609671e-001, 1.823110e+000, -8.785933e-001, -1.622301e+000, -9.475519e-001, -7.547187e-001, -3.010793e+000, 1.790082e+000, 2.457890e-002, -7.057980e-003, 1.089046e+000, 2.251183e+000, 1.350444e+000, -2.096372e+001, 1.259538e+001, -1.347421e+000, 2.284744e+000, -8.273058e+000, 5.079854e+000, 3.681034e+000, 2.682052e+000, 1.670038e+000, 6.421336e+000, 3.904601e+000, 1.448885e+000, -2.385842e-001, -1.534189e+000, 2.553384e+000, -1.688877e+000, -5.008507e-001, 1.130747e+000, -1.497709e+000, 5.828580e-001, -1.854684e+000, -3.268896e+000, 2.462801e+000, 2.346744e-001, 1.894546e+000, -1.888241e+000, -1.614552e+000, -2.821460e+000, 3.713272e-001, 8.170689e-001, 1.619411e+000, -1.915948e+000, 1.171702e-001, 1.060660e+000, -1.080742e+000, 1.532287e+000, 2.476351e+000, 3.399357e+000, -3.073234e-001, 6.452356e-001, 4.655951e-001, -2.441453e+000, -3.276379e-001, -1.511590e+000, -1.156466e+000, 5.141781e-001, 1.476748e+000, 2.061019e+000, 4.513988e+000, 7.034579e-001, -1.145123e+000, 2.415652e-001, -1.033493e+000, -9.509818e-001, 1.526017e+000, -4.212958e-001, -4.931267e-001, 8.985053e-001, -1.288941e+000, 1.229364e+000, -1.306873e-001, -6.069938e-001, 2.466218e+000, 9.362513e-001, -8.798405e-001, -1.227517e+000, -5.860284e-001, -1.407737e+000, 2.172370e+000, -2.165186e+000, -7.669085e-001, -1.426539e+000, -2.446320e-001, 1.067119e-001, -2.171088e+000, 6.595238e-001, -7.653428e-001, -6.039472e-001, 2.155897e+000, 4.084997e-001, -1.530205e+001, -3.980571e+000, 1.230392e+000, 2.091954e+000, -4.097054e+000, 2.106972e+000, -1.216260e+000, -4.081267e+000, 6.529332e-001, -1.219736e+000, -3.339923e-001, 3.098023e-001, 6.708646e-001, -5.291267e-001, 1.753620e+000, 2.603733e+000, 2.287083e+000, -3.546120e-001, 3.013819e-001, -1.274498e+000, -3.457841e+000, 1.810188e+000, 2.404224e-001, 9.158056e-001, -1.368652e+000, -8.445495e-001, -1.696910e+000, 1.344245e+000, -2.507209e-001, -3.516674e+000, -1.489994e+000, 5.887687e-001, -2.352428e+000, -2.645027e+000, 7.482504e-001, 3.113380e+000, 1.288057e+000, 7.317853e-001, -7.653879e-001},
{4.006569e-001, -3.436182e+000, 7.581039e+000, -4.176293e+000, 7.587936e-001, -6.661332e+000, 2.285913e+000, -1.127625e+000, -2.866922e+000, 4.008829e+000, -1.991743e+000, -3.508872e+000, 2.220872e+000, -1.663302e+000, 2.491240e+000, -5.438140e+000, -2.999218e+000, 2.275914e+000, 2.989569e+000, -5.693683e-001, -4.105969e+000, -1.474506e+000, -4.176546e+000, -1.789339e-001, -8.135505e-001, -2.418333e+000, -2.669225e+000, 1.101487e+000, 1.858895e+000, -1.249492e-001, -1.515790e+000, 2.266322e+000, -2.024215e-001, 2.111218e+000, 3.848306e+000, -2.357716e+000, -1.563173e+000, 4.093043e+000, -3.629016e+000, -5.167491e-001, 2.473045e-001, 2.089224e+000, -1.556395e+000, 1.008142e+000, -1.125628e+000, -7.140610e-001, -2.287401e+000, -1.810003e+000, 9.019306e-001, 2.651024e+000, -4.192859e-001, -4.865144e-001, -1.475363e+000, 1.618944e+000, 1.894741e+000, 2.826265e+000, -3.039475e+000, -1.530507e+000, 6.320047e-003, 4.546602e-001, -2.457286e-002, 1.472379e+000, -1.057672e+000, 1.708255e+000, -1.620758e+000, 1.885014e+000, -1.982117e+000, -4.258936e-001, -1.077403e+000, -1.120458e+000, 4.259702e+000, -1.564350e+001, -2.868815e+001, -2.088888e-001,

© ISO/IEC 2004 — All rights reserved


Copyright International Organization for Standardization
Provided by IHS under license with ISO
No reproduction or networking permitted without license from IHS
Not for Resale

4.677583e+000, 5.220450e+000, -2.368638e+000, 5.384236e+000, -7.398375e+000, -7.535096e+000, -1.926449e+000, 4.421177e-001, 4.175495e-001, -3.898045e+000, 5.961318e-001, -1.687146e+000, -3.288639e-001, 6.984855e-001, 7.701510e-001, 1.192932e+000, -1.152409e+000, -1.320603e+000, -4.629581e-001, -5.438412e-001, -4.093172e-001, 3.707197e-001, 1.343924e+000, 5.451167e-001, 1.439097e+000, -1.996814e-001, 1.795196e+000, -9.398980e-001, 2.589100e+000, 9.562420e-002, 2.778786e+000, 1.719960e+000, -3.365538e+000, -1.828479e+000, -1.511910e-001, -1.471820e-001, 8.156383e-001, -4.148281e+000, -8.318063e-001, 3.801916e+000, 1.016383e+000, 1.054504e+000, -2.199160e+000, 2.253775e+000, -1.519531e-001, 2.176546e+000, 8.580039e-001, -3.298322e+000, -8.773625e-001, 6.944797e-001, 1.870972e+000, 3.427573e-001, 9.357118e-001, -9.712323e-002, 1.325795e+000, -7.383648e-001, 3.879379e-001, -6.681349e-002, 3.783078e-001, -8.448097e-002, 1.305622e-001, 1.259974e+000, -1.713118e+000, 1.002054e+000, -3.582684e-001, 2.305532e+000, -1.452557e+000, -2.643961e+000, 5.401763e-001, -1.484273e+000, 1.384673e+000, 1.125534e+000, -7.363916e-002, 1.446361e-002, -1.108079e+000, 7.815242e-001, -6.173169e+000, -1.034124e+001, 1.376123e+001, 4.143161e+000, 1.091249e+001, 8.532605e-001, 8.918108e-001, 2.875594e+000, 3.981043e+000, 1.404063e+000, 1.280797e+000, 2.388504e+000, -4.359212e+000, 3.329986e-001, -9.295051e-001, -2.735039e+000, 7.169952e-001, 3.280208e-001, 3.564970e+000, -1.510853e+000, 8.995331e-001, 2.568977e+000, 7.141013e-003, -2.096299e+000, -2.392144e+000, 3.226747e+000, -7.477920e-001, -4.029523e+000, -7.564383e-001, -6.546007e-001, -7.463689e-001, -2.919645e+000, -9.355930e-001, -4.978623e-001, -3.228709e+000, 1.380758e+000, -7.442422e-001, 1.124504e+000, -2.349791e+000, -1.542568e-001},
{8.762474e+000, 1.551939e+000, 1.392099e+001, 1.346384e+001, -7.289281e+000, 8.573354e-001, -2.164273e+000, 2.577978e+000, -1.747370e+000, 5.481421e+000, -5.406518e+000, -5.729495e+000, 2.909282e+000, -8.619405e+000, -5.381230e+000, 1.099435e+000, -1.153063e+001, -3.361033e+000, 4.750821e+000, -3.458514e+000, -6.463807e+000, -5.487027e+000, -1.149122e+001, -1.137785e+001, -9.994704e-001, 3.621006e+000, 1.046515e+000, -3.833667e+000, -7.905853e+000, 5.751399e+000, -4.773573e+000, -3.623977e+000, 4.231301e+000, -2.079806e-001, -2.045364e+000, -2.500075e+000, 1.946556e+000, -1.893659e+000, 4.907654e-001, 3.416371e+000, 6.772868e-001, 6.703864e+000, -8.084090e-001, -1.455787e+000, -2.908487e+000, -9.955706e-001, -2.050580e+000, -7.905396e-002, 2.384858e+000, 3.655895e+000, 2.416988e+000, -9.685832e-001, 1.237249e+000, 3.731996e+000, 1.358631e+000, 1.088159e+000, -1.418445e+000, 8.615235e-001, -3.191018e+000, 5.320003e+000, 1.032919e+000, -1.668332e+000, -1.650870e+000, 3.402687e-001, 1.479985e+000, -2.506970e-001, 1.959122e+000, -2.045999e+000, 2.857089e+000, -2.051153e+000, -5.716592e+000, -1.031267e+000, -1.024713e+001, 3.047637e+001, -1.450507e+001, -3.282419e+000, 1.005726e+000, -6.824921e+000, -6.482692e+000, 2.870129e+000, 9.679245e-001, -6.231365e+000, 1.724404e+000, -7.348784e+000, 3.789854e+000, 2.380509e+000, -5.602591e+000, -2.538395e+000, -4.180320e+000, -5.233742e+000, 2.023172e+000, -2.790929e+000, -1.530070e+000, 1.339504e+000, -1.226837e+000, 2.661970e-001, 3.521557e+000, 4.164317e+000, -1.960843e+000, -1.595928e+000, -8.885041e-001, 2.052322e+000, 3.928975e+000, -8.421583e-001, -4.714169e+000, 1.181154e+000, -1.308015e+000, -1.504718e+000, 1.758730e+000, 4.921435e+000, 1.207902e+000, 1.038663e+000, -5.043071e+000, 1.605097e-001, -2.528364e+000, 2.826415e+000, 2.844584e+000, 6.623259e-001, -2.649968e+000, 2.108890e-001, 1.855425e-001, 1.567637e+000, -8.281332e-001, 2.591231e+000, -3.177976e-001, -2.382636e+000, 2.095324e+000, -1.364195e+000, -2.215692e+000, 3.950435e-001, -1.480592e-001, -4.389729e+000, -1.240705e+000, -2.560446e+000, -5.164370e+000, 4.651343e-001, -2.101326e+000, -1.160395e+000, 1.637427e+000, -6.571907e-001, 1.214559e+000, 7.427367e-001, -1.964767e+000, -1.219749e+000, 1.119596e+000, 8.773950e-001, 5.664905e-001, 3.773797e-001, -1.560954e-001, 2.698994e-001, -4.765962e+000, -6.260177e+000, -1.271863e+000, -2.819945e+001, -2.793432e-001, -1.336840e+000, -3.581263e+000, 3.435151e+000, -4.780818e+000, 2.083906e+000, -1.405407e+000, 8.980945e+000, 2.603279e+000, 2.543882e+000, 4.442658e+000, -4.575890e+000, 4.357365e+000, 1.133800e+001, 6.665667e+000, -2.603316e+000, -5.769480e+000, -1.782789e+000, -3.341155e+000, -2.355778e+000, -1.686621e+000, -1.840500e+000, 2.655229e+000, 1.620170e+000, 6.712893e-001, 2.724309e+000, -1.490946e-001, -1.184623e+000, -2.195516e-001, -5.609082e+000, -4.289460e-001, -2.776987e+000, -6.958952e-001, 1.016884e+000, -8.235239e-001, 2.382417e-001},
{9.856149e-001, -5.080268e+000, 2.568193e+000, -7.990107e+000, -7.182586e+000, -1.321697e+001, -7.340666e+000, 2.822314e+000, -9.661496e-001, 9.599481e+000, 7.862461e+000, 5.556948e+000, -7.920901e-001, -2.388499e+000, -2.444683e-001, 5.090948e+000, -2.171213e+000, -2.004747e+000, 2.572669e+000, 9.045068e+000, -4.641652e+000, 6.632561e+000, 6.365425e+000, -1.845424e+000, -1.707853e+000, 7.058683e+000, 3.236480e+000, -2.276098e+000, -4.068132e+000, 1.686141e+000, 1.262738e+000, -8.136938e-002, 1.245270e+000, -4.194354e+000, 2.683839e+000, 2.504874e+000, -1.020061e+000, -5.240627e-001, 3.798706e+000, -1.681182e+000, -7.411747e-002, -2.105899e+000, 2.455968e+000, -1.622146e+000, -2.223373e+000, 2.584125e+000, 9.730010e-001, 6.013331e+000, -9.779913e-001, -4.834454e-001, 1.070204e+000, -1.046277e+000, -


© ISO/IEC 2004 — All rights reserved

Copyright International Organization for Standardization
Provided by IHS under license with ISO
No reproduction or networking permitted without license from IHS
Not for Resale

1.455904e+000, -2.623847e+000, 5.082137e-001, 7.745315e-001, -1.836909e+000, 8.446681e-001, -5.266340e-001, 1.009724e+000, 2.353490e+000, 1.429031e+000, 1.794903e+000, 1.631654e+000, 1.722119e-001, -1.414713e+000, -2.603767e+000, 1.683425e+000, 7.887770e-001, -9.365714e-001, -2.070970e+000, 5.621597e+000, -1.033254e-001, -1.762076e+001, -3.796836e+001, 1.971883e+000, -1.181163e+001, -2.633578e+000, 2.356598e+000, 3.975555e+000, -3.958940e+000, 1.736016e+000, 5.207578e-001, -1.445543e-001, 9.269853e-002, -3.465704e+000, -4.692186e+000, 2.312510e+000, 1.547125e+000, 1.748962e+000, -7.067837e-001, -1.335259e+000, 1.234845e+000, 1.968438e+000, -4.595245e-003, 2.302748e+000, -1.387438e+000, -1.988704e+000, 6.029262e+000, -2.454001e+000, -6.114561e+000, -5.151035e-003, 6.564658e+000, 5.218468e-001, 2.528604e+000, -5.336615e+000, 1.498271e+000, 2.743484e-001, 3.696471e-001, 8.830388e-003, -1.964496e+000, 2.535109e-001, 3.315072e+000, 2.513672e+000, 2.394126e+000, -3.705101e+000, -4.506097e+000, -6.501952e-001, -7.789049e-001, 3.132506e+000, -2.262129e+000, -1.256987e-001, 1.845551e+000, -1.876497e+000, 9.554839e-001, -1.488384e+000, -2.279381e+000, 1.007198e+000, 2.345389e+000, 8.427300e-001, -1.466984e-001, 2.531042e-001, -3.531708e+000, 2.181719e+000, 1.648458e+000, 1.795939e+000, 2.185366e+000, -1.342543e+000, -3.632119e-001, -6.923616e-001, -2.003872e+000, -7.582334e-001, 2.224890e+000, -1.232387e+000, 3.221228e+000, 3.514007e+000, -2.546276e+000, -1.878027e+000, -1.268377e+000, -5.826800e-001, 9.078173e-001, -5.567847e+000, 1.491412e+000, -3.104136e+000, -2.159525e+001, 3.570370e+000, -1.788104e+000, -3.423429e+000, -9.208413e-001, 3.995038e+000, -1.871429e+000, 1.342654e+000, 4.074820e-001, 3.114783e+000, 8.624139e+000, 5.208897e+000, 5.098208e+000, -1.518566e+000, -2.592865e-001, -1.694453e+000, -1.847762e+000, 5.702692e+000, -1.544594e+000, 3.547416e+000, 8.166369e+000, 1.631594e+000, -2.413291e+000, 7.724239e+000, -8.386840e-001, -1.999367e-001, 1.261451e+000, 1.079087e-001, -2.169892e+000, 3.887237e-001, 2.389232e+000, -3.237980e+000, 8.470559e-001, 1.872791e+000, 1.875332e+000, -2.466617e+000},
{-1.019108e+001, -3.013335e+000, -1.533396e+001, 3.449339e+000, 1.795317e+001, -1.498009e+001, -1.164598e+000, 4.549746e+000, -7.936842e+000, 4.941294e+000, 2.761831e+000, -7.285789e+000, 1.514255e+000, -6.501283e-001, -3.595619e+000, 7.368630e+000, -7.791591e+000, -3.312014e+000, 5.376248e+000, 3.071601e+000, -1.707137e+000, -1.927673e+000, -5.641334e+000, 2.771765e-001, -6.919641e+000, 5.626612e+000, 7.068771e+000, 7.212321e-001, 2.677753e+000, 1.040026e+000, -7.893237e-001, 1.012981e+001, 5.813521e+000, 1.193111e-001, -2.085506e+000, 4.505687e+000, -6.296673e+000, 1.476629e-001, 2.835012e+000, -3.560181e-001, -3.214849e+000, -1.745549e+000, -3.231088e+000, 3.939043e+000, -3.138264e+000, -1.972479e+000, -1.564263e+000, 3.230489e+000, 1.383249e+000, -1.355635e+000, 1.980564e+000, -4.616071e+000, -6.745405e-001, -5.411758e+000, 1.607027e+000, -3.532520e+000, -1.918879e+000, 9.526483e-002, -3.654299e+000, -4.910959e+000, 1.007003e+000, -4.522663e-002, 1.138840e+000, 6.636763e-001, 3.431871e+000, 2.261028e+000, -1.875505e+000, -3.212164e+000, 3.629520e-001, -6.061248e+000, 8.991801e+000, 1.526765e+000, -2.988123e+000, 3.937778e-001, 1.680396e+000, 4.144642e+001, 8.010168e+000, -6.409618e+000, -3.446402e+000, 1.249422e+001, -9.204637e-001, -9.977296e-001, 4.911808e+000, -1.063447e+001, 6.551033e+000, -2.336029e+000, 3.189418e+000, -4.516853e+000, -2.626680e+000, 1.384480e+000, 5.917936e+000, -1.792565e+000, -9.525790e-001, 3.628869e+000, 4.505803e+000, -1.735985e+000, 6.102825e+000, 7.115444e+000, -1.271173e+000, 6.311488e-001, -1.826599e+000, 2.983480e+000, -1.056295e+000, 1.357993e+000, -7.164956e-001, -4.952707e+000, 1.841541e+000, 2.391577e+000, 6.507955e-001, -2.424475e+000, 2.959216e+000, 6.748938e+000, 2.794892e+000, 1.533347e+000, -4.205779e+000, 2.050195e+000, 2.576437e-001, 4.021682e-001, 4.020013e+000, -2.046386e+000, 2.328114e+000, 1.590867e+000, 3.055266e+000, 1.331578e+000, -2.533009e+000, 2.116648e+000, 1.411517e+000, 3.612299e-001, 1.472461e-001, 5.576020e-001, 4.406770e+000, 3.730500e+000, 4.167763e+000, 1.697075e-001, -3.086388e+000, 4.709677e-001, -1.359682e+000, -1.457785e+000, 7.956832e-001, -8.405093e-001, -8.814911e-001, -2.963562e-001, -4.493614e+000, -9.063330e-001, -1.586368e+000, 2.653735e+000, -1.767933e+000, -3.181311e-001, 5.820294e-001, 2.903509e+000, 1.858972e-001, -4.245377e+000, -3.761188e+000, -1.183682e+001, -4.231769e+000, 2.188615e+001, -6.779124e+000, 7.649421e+000, 9.937324e-001, -6.704819e+000, 4.973656e+000, 7.228331e-001, -4.614824e+000, 4.980540e+000, 2.040684e+000, 2.243596e+000, -1.366617e+000, 4.900864e-001, -2.878733e-001, -8.873935e+000, 4.586518e-001, 3.924816e+000, 3.924983e+000, -5.617627e+000, 6.313587e-001, -4.749433e-001, 9.569950e-001, -4.682475e+000, -8.393471e-001, -9.385742e-001, 2.480489e+000, -1.611064e+000, -3.009309e-001, 3.546283e+000, -1.668534e+000, 2.221884e+000, 1.856072e+000, 3.637950e-001, -1.583084e+000, -3.587682e+000},
{-1.360602e+001, -4.531784e+000, -2.348753e+000, 3.633242e+000, 8.237888e+000, -4.905346e+000, 1.377541e+001, 6.380868e+000, 1.777253e+000, -9.135756e+000, 1.045922e+001, 8.099328e+000, 5.613436e+000, 6.633285e-001, -9.158098e+000, -8.975249e+000, -4.443528e+000, 2.302974e+000, -1.146437e+000, -2.963320e+000, 6.209244e+000, 9.543095e-001, -1.204949e+000, 7.696663e+000, 2.938764e+000, 3.661024e-002, -3.808623e+000, 6.903486e+000, 3.107085e+000, 4.368998e+000, -2.211073e+000, 4.428571e+000, -3.918515e+000, -4.518584e+000, 4.601364e-001, -6.847658e-001, -2.961088e+000, -3.297629e-001,

© ISO/IEC 2004 — All rights reserved


Copyright International Organization for Standardization
Provided by IHS under license with ISO
No reproduction or networking permitted without license from IHS
Not for Resale

-3.521208e+000, 1.727771e+000, 4.378757e+000, 1.874721e+000, -2.817425e+000, -4.456646e-001, -5.035102e+000, -3.477635e-001, 1.016214e+000, -9.381167e-001, -4.846731e+000, -1.563192e+000, -3.262041e+000, 6.681094e-001, -1.301399e+000, -3.414334e+000, 1.761572e+000, -3.119210e+000, 7.721885e-001, 4.541724e-001, 2.429861e+000, -2.296289e+000, 4.342284e+000, 2.328091e+000, 5.035166e-001, -4.107251e+000, 1.810489e+000, 2.940485e+000, 4.059465e-001, -2.118670e+000, -4.377587e+000, 9.111444e-001, 1.603788e+001, 2.516996e+000, 1.315588e+001, -1.012444e+001, 1.700466e+001, -1.097194e+001, -4.486507e+001, 4.976708e+000, 2.696104e+000, -8.600851e-001, 7.906207e+000, 8.310944e+000, 8.818920e+000, 5.395692e+000, 1.525832e+000, -6.803713e+000, 4.029711e+000, -2.003026e+000, 3.120869e+000, 2.785274e+000, -9.250086e-001, -4.317105e+000, -5.758993e+000, -3.164212e+000, -2.318892e+000, 2.131145e-001, 3.154834e-001, -6.532066e+000, -1.869920e+000, 1.540315e-001, 3.203121e+000, 8.350369e-001, -1.738134e+000, 1.081716e+000, 2.152806e+000, -2.774962e-001, -2.821528e+000, -1.727710e+000, -5.788403e-001, 7.396563e-001, 2.273425e+000, -7.192220e-001, 2.032542e+000, 4.663064e-001, -5.693567e-002, 3.957612e+000, -2.817191e-001, 2.027494e+000, 1.711339e+000, -1.264221e+000, -5.651777e-001, 2.901237e+000, 1.571648e+000, 1.133728e+000, 2.688056e+000, -2.798059e-001, 3.512412e+000, -2.346260e+000, 6.603945e-001, 2.230424e+000, -1.537439e-001, -8.419552e-001, 3.716461e+000, -3.203805e-001, 4.497115e+000, 1.243913e+000, -2.265861e+000, -4.128849e-001, 9.724388e-001, 9.728075e-001, 1.492839e+000, -2.494723e-001, 1.807459e+000, -1.803769e+000, -1.116589e+000, 1.922904e+000, -1.097785e+000, -7.858394e-001, 1.942768e+000, -9.405184e-002, 8.053887e-001, 1.957566e+000, 6.217733e+000, -1.158085e+001, -4.659934e+000, 4.475090e+000, 2.837522e+001, -1.340492e+001, 1.109158e+001, 1.441087e+001, -1.358945e+001, 5.517249e+000, 7.152234e+000, 2.646674e+000, -4.572551e+000, -1.015630e+001, -3.354642e+000, -7.616150e-001, -1.052443e+000, -7.559968e-001, -2.540828e+000, -3.074858e+000, 6.126571e+000, -9.495624e+000, -7.996550e-001, -4.254885e+000, 3.587901e-001, -1.242891e+000, 1.050252e-001, 3.546387e+000, -3.383651e+000, 1.482305e+000, 3.962477e+000, -4.815004e+000, 1.366020e+000, -1.905720e+000, 1.954814e+000, 5.428222e+000, -7.719943e-001, -1.246754e+000},
{-7.717856e+000, -3.935887e+000, 4.463623e+000, -6.089776e+000, 6.057438e+000, 1.616334e+001, -1.365836e+001, 1.680960e+001, -3.728988e+000, -9.423629e+000, 2.194133e+000, -9.994723e+000, -4.974062e+000, 4.614227e-001, -6.468902e+000, 4.164553e+000, 7.196271e-001, -1.639184e+000, -1.106306e+001, 1.541960e-001, -7.111378e-001, -6.420055e+000, 5.952381e+000, 5.449378e+000, 6.723828e-001, -4.085860e+000, 1.621087e+000, -1.531525e+000, 2.775885e+000, 2.097222e+000, 1.992345e+000, -5.217793e+000, 1.951766e-001, -9.112822e+000, -3.045094e-001, -1.747869e+000, 2.047058e+000, 2.243427e+000, 3.890862e+000, -2.028423e+000, 5.010754e+000, -5.348427e+000, 3.145233e+000, 2.460403e+000, 1.076592e+000, -3.828495e+000, -2.287376e+000, 2.361402e-001, -1.284615e+000, -7.310924e-001, 8.100492e-001, 2.324266e+000, 6.135817e+000, -8.212202e-001, -1.226566e+000, 1.497457e+000, 5.512138e-001, 2.858438e+000, 6.003458e-001, -5.027264e+000, -1.823634e+000, -3.725768e-001, -3.729595e+000, 2.222624e+000, -2.402747e-001, -7.206079e-001, 3.300240e-001, 3.438020e+000, -1.599898e+000, -5.464740e-002, 2.477201e+000, 1.071381e+001, 1.082733e+000, -1.032575e+001, 1.681516e+001, -2.380612e+001, 1.739227e+001, -4.272998e+001, 1.696899e+001, 1.167934e+001, 6.270755e+000, -5.386627e+000, 2.082024e-001, 2.502691e+000, 4.818350e+000, -2.409388e+000, -2.129152e+000, -9.695636e+000, 4.358651e-001, 2.234050e+000, -1.021049e+001, -6.553996e+000, -1.982200e+000, 2.397188e+000, 1.574802e+000, 5.197704e+000, -6.493157e+000, -8.068375e-001, 7.321106e-001, -1.596906e+000, 2.382340e+000, 3.152956e+000, 5.068521e-001, -6.528813e-001, 2.335003e+000, -1.028376e+000, 5.016421e+000, 3.600717e+000, 1.711243e+000, -7.249874e-001, -1.200616e+000, 5.284907e+000, 1.161194e+000, -3.091809e+000, 5.754562e-001, 3.465471e+000, 2.685340e+000, 2.443514e+000, 3.506506e+000, 1.595069e+000, -2.360819e+000, -5.143105e+000, -8.566526e-002, -1.461926e+000, -5.299694e+000, 2.840232e-001, -4.529626e+000, 9.803397e-001, -8.591882e-001, 4.902544e-001, -1.257631e-001, 1.499919e+000, -6.500889e-001, -1.548174e+000, 2.850157e+000, 1.490217e+000, 3.332220e+000, -3.989718e-002, -1.773536e+000, 1.949221e+000, 8.783025e-001, -4.443748e+000, 1.617313e+000, 1.703083e+000, 2.695706e+000, -2.567628e+000, 9.259260e-001, -3.279119e+000, 6.422862e-001, -3.411506e+000, 4.152483e+000, -7.437408e+000, 4.955550e+000, -6.025400e+000, -4.487835e+000, 1.178299e+001, -8.136156e+000, -1.319274e+001, -1.916184e+001, 3.353689e+000, -2.377715e-001, 2.392288e+000, 9.226966e-001, -2.883506e+000, 8.975779e+000, 1.317890e+000, 6.146563e-001, 4.172520e-001, 1.840731e+000, 7.222928e+000, 7.743455e-002, -2.774771e+000, 5.328627e-001, 2.051903e+000, 2.080202e+000, 4.404972e+000, -2.355202e+000, -3.754345e+000, -1.160070e+000, 1.879752e+000, -3.149147e+000, 7.474721e+000, 5.729034e+000, 7.348587e+000, 1.081628e+000, -1.210193e+000, -6.034233e+000, -5.433173e+000, 8.139757e-001, 6.611900e-001},
{4.133623e+000, -3.915590e+000, 1.389717e+000, 9.755410e+000, -1.172937e+000, 1.395351e+001, -1.164759e+001, 7.906153e+000, -1.262430e+001, 9.558306e+000, -8.146797e+000, 4.754559e+000, 1.762030e+001, 6.240746e+000, -7.862527e+000, 5.041452e+000, -3.022806e+000, 2.466947e+000, 1.078883e+001, 4.113504e-001, -3.511260e+000, 2.312161e+000,


© ISO/IEC 2004 — All rights reserved

Copyright International Organization for Standardization
Provided by IHS under license with ISO
No reproduction or networking permitted without license from IHS
Not for Resale

5.822323e-001, -3.140458e+000, 5.916027e+000, 1.100757e+001, -4.206160e+000, 2.907085e+000, -3.127375e+000, 5.660851e-002, 2.012676e+000, 1.702752e+000, 3.876428e+000, -4.871141e+000, 3.119570e+000, 2.565504e+000, -3.009433e+000, 3.123140e-001, 1.105464e+000, 4.042713e-001, -3.534529e+000, -8.808113e-002, -4.909437e-001, 2.450149e+000, 1.338565e+000, 3.619865e+000, -7.755691e+000, 7.329551e-001, 4.813287e-001, 2.560738e+000, -1.771215e+000, -9.085243e-001, 1.154754e+000, -4.030607e+000, 1.172279e+000, -2.717412e+000, -1.463669e+000, -1.054996e+000, -1.443707e+000, 2.085679e+000, 3.298624e+000, 3.913513e+000, -2.756284e+000, 3.238836e+000, 2.454199e+000, 1.822196e-001, 1.585527e+000, -1.065753e+000, -2.008886e+000, 2.020790e+000, -8.082996e-001, 1.245334e+001, 5.458483e-001, -9.669889e-001, -6.775350e+000, 1.554617e+001, -1.905821e+001, -2.671916e+001, -2.966883e+001, -1.898290e+001, -2.472002e+001, 1.146444e+001, -1.089074e+001, 4.428138e-001, 2.296440e+000, 5.780408e+000, 1.030492e+001, 2.021412e+000, -6.312424e+000, -3.701345e+000, 2.457873e+000, -6.214013e+000, -6.544329e-001, 2.668705e+000, -1.338979e+000, 2.691690e+000, 4.232066e+000, -1.080498e+000, -2.722480e+000, -9.901338e-001, -1.583554e+000, -2.235812e+000, -5.229403e+000, -5.100854e+000, 1.148349e+000, -2.578454e+000, -1.163376e+000, 3.047090e+000, -3.866545e+000, 1.216789e+000, 5.845149e+000, 1.721902e+000, -1.978021e+000, 1.113656e-001, 3.320989e+000, -5.095637e-001, 1.835962e+000, -3.941483e+000, -1.574004e-001, 4.518187e-001, 1.840296e+000, -2.036747e+000, 5.532995e-001, 1.550337e+000, 9.045671e-002, -5.355268e+000, 1.291437e-001, -1.749079e-001, 4.824762e-001, -5.563567e-001, -9.579144e-001, 4.577621e-001, 9.446103e-001, 7.131703e-001, -4.043355e+000, -2.486674e+000, 1.328835e+000, -9.923114e-001, 4.651894e+000, 9.050826e-001, -8.860219e-002, 5.156780e+000, -1.848739e+000, 2.217287e+000, -1.178340e+000, -2.958474e+000, 1.423795e+000, -2.359627e+000, -1.149423e+000, 3.386205e+000, -1.676723e+000, -8.486601e+000, -3.032635e+000, 8.810666e+000, 1.621600e+001, 4.995855e-001, -1.152393e+001, -2.312509e+001, 1.867368e+001, -2.436427e+001, -1.159145e+001, 8.100528e-001, -1.345541e+001, 2.168271e-001, 9.523530e+000, 1.950896e-001, -9.737333e-001, 7.361070e+000, 3.786258e+000, -3.524013e+000, 7.972422e-001, 2.608899e+000, -1.591196e+000, -7.312136e+000, 3.752712e+000, -4.603534e+000, 1.233276e+000, 3.745686e-001, 4.199652e+000, 2.550624e+000, 9.284305e-001, -7.970438e+000, 1.218855e+000, -3.852884e+000, -4.372669e-001, -3.667386e-001, -4.364381e+000, 2.219326e+000, 4.670921e+000, 2.406684e+000},
{-2.546837e+000, 1.301952e+001, 1.866180e-001, -4.740315e+000, 2.504382e+000, -2.486912e+001, 6.873968e+000, -6.938882e+000, -1.386701e+001, 1.447749e+001, -4.218409e+000, -1.028552e+001, -3.917288e+000, 8.725972e-001, -5.855849e+000, -1.281422e+001, -5.609449e+000, 1.999981e+000, 6.041500e+000, 3.237249e+000, -6.037916e+000, 6.821066e+000, -7.878271e+000, 2.952782e+000, 3.620427e+000, 5.131344e+000, 4.725834e+000, 5.170873e+000, 5.320461e-001, 4.420259e+000, 1.019794e+001, 2.042672e+000, -3.868069e+000, -4.154542e+000, 2.325736e+000, -1.211263e+000, 2.967447e+000, -9.795957e-001, 5.633880e-001, 4.892033e+000, 1.455768e+000, 1.991755e+000, 3.593863e+000, -7.251078e+000, 3.604631e-001, 5.247341e+000, -4.587758e-001, 4.682748e+000, -2.184284e+000, -2.404925e+000, 6.174446e+000, 1.001370e+000, -2.614390e-001, -2.083737e+000, 2.193826e+000, 2.409955e+000, 1.201782e+000, 2.324551e+000, -1.671826e+000, 3.229819e+000, 8.903335e-001, -1.760730e+000, 3.812060e+000, 2.135834e+000, 9.901873e-001, 6.229601e-001, -3.004885e+000, 2.431275e+000, -1.697147e-001, 7.592150e-001, -5.403522e+000, -7.394786e+000, 9.450290e+000, 5.026740e+000, -1.290666e+000, -3.315112e+001, -2.560146e+000, 1.785608e+000, -3.253675e+001, 2.131141e+001, -5.165586e+001, -3.306203e+001, 1.398382e+001, -1.182598e+001, -7.219420e+000, -9.384041e-001, -3.683807e+000, -9.775851e+000, -3.495835e+000, -2.385796e+000, 1.098535e+001, 4.820865e-001, -5.673929e+000, 1.995803e+000, -6.588366e-001, -9.835602e-001, 1.563677e-001, -2.106734e+000, 4.613776e+000, 8.463488e+000, -1.813906e+000, 6.155013e+000, 2.333657e+000, 4.350604e+000, 1.946162e+000, -2.919463e+000, -4.425942e+000, 1.403043e+000, -1.236691e+000, -7.202300e-001, 2.927349e-002, -1.749795e+000, 2.014261e+000, 5.838065e+000, 8.394481e-001, -1.952464e+000, -3.808587e+000, -1.355049e-001, -4.267868e+000, -2.560712e+000, -1.539029e+000, 3.609796e+000, 5.650357e+000, 9.114449e-001, 1.287787e+000, -9.896527e-001, 5.130259e+000, 5.390705e-001, -3.361186e-001, 3.271540e-001, 4.971530e+000, -3.118147e+000, -2.881134e+000, 5.266837e-001, -5.017415e+000, 1.240349e+000, -2.470350e+000, -5.096311e+000, 2.729777e+000, -3.410618e+000, 4.427179e-001, 1.673455e+000, 1.906221e+000, 6.260161e-001, -2.445734e+000, 2.670902e+000, -2.445316e+000, -8.561252e-001, 3.097396e+000, -1.092325e+000, 5.478093e+000, -1.127378e+001, 2.868366e+000, 5.116919e+000, 1.835538e+001, 6.104972e+000, 9.619055e-001, 8.948253e+000, -4.979627e-001, -1.501502e+001, -1.454942e+001, -1.016929e+001, 1.677375e+001, -9.045785e+000, 1.484882e+000, 1.138273e+001, 4.119731e+000, -6.023314e+000, -8.827678e+000, -3.327654e+000, 4.370909e+000, 4.034374e+000, -2.675302e+000, 3.334175e+000, -1.077717e+000, -1.015608e+000, -2.843801e+000, 3.440060e-001, -7.545625e+000, 5.865521e-001, -3.319096e+000, 5.875356e+000, -6.865798e+000, -8.600327e+000, 9.465636e-001, -2.687139e-001, -9.756394e-001, 3.270234e+000, -1.094127e+000, -2.094637e+000},

© ISO/IEC 2004 — All rights reserved


Copyright International Organization for Standardization
Provided by IHS under license with ISO
No reproduction or networking permitted without license from IHS
Not for Resale

{-3.405843e+000, -2.225003e+000, 1.411600e+001, -6.474013e+000, -5.968242e+000, -1.403481e+001, 1.254620e+001,
2.851723e+001, 1.414234e+001, -9.599758e-001, 1.612953e+000, 1.134113e+000, 1.116813e+001, -1.242912e+001, 3.249655e+000,
-3.482367e+000, -1.426268e+001, -5.076840e+000, -8.209767e-001, 5.213025e+000, -7.653406e+000, 3.053343e+000,
1.181065e+000, -6.959934e-001, -4.102754e-001, 6.396754e+000, 9.231841e+000, -7.394685e+000, -5.172795e-001, 2.529597e+000,
-3.093751e+000, -8.833851e+000, -1.791613e+000, 2.638358e+000, -1.277016e+000, -1.985589e+000, -5.917902e+000, -
4.177557e+000, -2.628790e+000, 2.545005e+000, -3.022137e+000, -2.187675e+000, -5.816161e-001, 4.871457e-001, 6.379659e-001,
2.308536e+000, -5.356262e+000, -9.053391e-001, -1.040994e+000, 1.323636e+000, 1.758738e+000, 8.688438e-001, 5.999840e+000,
-4.636942e+000, -2.417105e+000, -1.137858e+000, 5.530762e-001, 3.708412e-001, 2.211901e+000, 1.651891e+000, 1.884716e+000,
2.118989e+000, 6.405136e+000, 4.405970e+000, -4.003592e+000, 1.691626e-001, 3.865586e-001, -2.202753e+000, 1.814242e+000, -
1.501537e+000, 6.669426e+000, -7.769380e+000, 2.209014e+000, 1.258649e+001, -1.066821e+001, -3.774323e+000,
1.006035e+001, 6.563735e+000, -1.014733e+000, -7.912382e+000, -3.322832e+000, -1.646221e+001, -2.413683e+001, -
3.517438e+001, 8.147161e+000, 1.419929e+001, 7.930213e+000, -3.358931e+000, 3.464021e+000, 8.099586e+000, 1.773313e+001,
5.577035e+000, 4.781064e+000, -9.823957e-001, -5.519705e+000, -3.307073e-001, 6.880315e+000, -9.829230e+000, -
2.395623e+000, 3.810682e+000, 1.142628e+000, 4.668993e+000, -7.547760e-001, 4.466282e+000, 3.079805e+000, 2.938871e-001,
1.234927e+000, -6.491108e+000, -6.732347e+000, 4.903308e+000, 2.433654e+000, -3.991089e+000, 1.160179e+000,
5.155555e+000, -3.857973e+000, 3.825560e+000, -6.535663e+000, -2.456419e+000, 7.897337e-001, -3.959802e+000, -3.696988e-
002, -3.691714e+000, -1.645677e+000, -4.128191e+000, 2.141199e+000, -1.371798e+000, 4.290312e+000, -1.160794e-001,
6.552212e+000, 1.720940e+000, 3.389225e+000, 1.215305e-001, 7.188042e+000, -2.395740e+000, -3.628745e-002, 3.357654e+000, -
1.510150e+000, 1.042025e+000, 4.195327e+000, -5.928681e-001, -3.771460e+000, 2.962474e+000, -4.375619e+000, 8.374647e-001,
-1.282238e+000, 2.656395e+000, -2.639392e+000, 1.624813e+000, -1.047896e+000, -6.218890e-001, -8.912581e-001,
8.028993e+000, -7.656023e+000, 7.936301e+000, 5.302270e+000, 8.081436e+000, 7.650143e+000, -1.844291e+001, -
5.452853e+000, -2.349942e+001, 3.259019e+001, -4.573490e+000, -1.397809e+001, -6.615233e+000, -3.642796e+000,
6.323094e+000, -7.777652e-001, -4.748788e+000, 3.240284e+000, -2.882234e+000, -1.243885e+000, 9.827217e+000, -1.159434e-
001, -1.247559e+000, -4.333582e+000, -1.445980e+000, 4.096343e+000, -3.686532e+000, 7.251883e-001, -3.867136e+000, -
2.046321e+000, 1.840138e+000, -6.521403e-001, -1.017203e+000, 5.111878e+000, 1.115881e-001, -8.059913e-001, 5.246620e+000, -
5.465190e-001, 6.783990e+000},
{-1.671973e+000, 6.851394e+000, -1.471571e+000, 1.998409e+000, 3.332743e+000, -7.492696e+000, 1.766843e+001,
4.740863e+000, -1.896453e+001, -7.350912e+000, -2.836678e+000, 1.409101e+001, -6.539933e+000, 8.697636e+000, -
1.641733e+000, 4.013481e+000, 4.184267e-001, -2.923800e-001, 9.966628e+000, 3.388656e+000, -1.609611e+000, 8.213675e+000, -
7.437093e-001, 2.006965e+000, 3.733101e-002, 3.252045e+000, -2.059511e+000, 2.480934e+000, -2.027598e+000, -2.135066e+000,
7.687360e+000, -6.967293e+000, -1.243823e+001, -6.227403e+000, -4.217725e+000, 3.730536e+000, -2.136306e+000, 7.523086e-
001, 4.793472e+000, 1.002383e+000, 2.132414e+000, 3.472259e+000, 1.171541e+000, -2.193741e+000, 3.326391e-001, -
5.187879e+000, -5.251860e+000, 1.423292e+000, -2.503052e+000, 1.619235e-001, -3.102673e+000, 5.831407e-001, 3.684107e+000,
-4.174794e+000, 8.457889e-001, 4.064932e+000, 4.175746e+000, 3.152107e+000, -2.003043e+000, -4.729670e+000, -
3.391763e+000, 2.682362e+000, 4.125880e+000, 6.557426e-001, -6.754137e+000, -4.251037e-001, 2.406157e+000, 5.284121e-001,
1.482654e+000, -1.284559e+000, 6.382654e-001, -9.989718e+000, -7.205433e+000, -1.680638e+000, -1.022673e+001, -
8.452431e+000, 1.048997e+001, -1.855106e+001, -4.324171e+001, -2.237195e+001, 3.818268e+001, -2.860225e+001,
5.100883e+000, 1.543107e+001, 3.276402e+000, 7.625434e+000, -3.478193e+000, 6.913849e+000, -1.055880e+001, 7.814702e+000,
5.023361e-001, 2.563345e+000, -1.886272e+000, -2.003018e+000, 1.834567e+000, 3.680720e+000, -5.301275e+000, -
1.976409e+000, -2.138830e+000, 5.327899e-001, -1.662479e+000, 3.041588e+000, 3.294727e+000, -1.808553e+000, -
1.530493e+000, -5.946494e+000, -8.603139e-001, 5.864922e+000, -8.583030e+000, 1.833594e-001, -1.520320e+000, -
1.063643e+000, 1.159999e-001, -1.895447e+000, -7.814741e-001, -1.913291e+000, -1.441853e+000, -1.541754e+000, 8.477148e-001,
-1.410873e+000, -3.941117e+000, -4.402179e+000, 8.605218e-001, 3.003556e+000, -2.030208e+000, 1.597845e+000,
2.246554e+000, -2.072959e+000, 1.764186e+000, 1.152791e+000, -3.317913e+000, 3.515417e+000, 3.048606e+000, 8.124147e-001,
2.613428e+000, 1.677973e-001, -1.153775e-001, 1.132859e+000, 2.651198e+000, -6.964287e+000, -2.942266e-001, -5.899036e+000,
2.092786e+000, -1.382718e+000, -4.765525e-001, 1.106415e+000, 3.687129e-001, 1.593930e+000, 1.439348e+000, -4.253034e+000,
1.156494e+000, 5.587441e+000, -6.723377e+000, 3.404801e+000, -4.123769e+000, -3.571034e+000, 1.936418e+000,
9.244131e+000, -2.097856e+001, -1.551825e+001, -1.223862e+001, 9.464878e+000, -2.153861e+001, 8.956305e+000, -


© ISO/IEC 2004 — All rights reserved

--`,,```,,,,````-`-`,,`,,`,`,,`---

Copyright International Organization for Standardization
Provided by IHS under license with ISO
No reproduction or networking permitted without license from IHS
Not for Resale

5.907678e+000, -3.610943e+000, 6.333963e-001, 4.353554e+000, 7.286822e-001, -7.074783e+000, 4.279786e+000, 3.288643e+000, -5.102213e-001, 3.969598e+000, 7.651517e+000, -4.606475e+000, -2.905387e+000, 7.572208e+000, -5.938400e+000, 1.741905e+000, -2.198259e+000, 4.821150e-001, -7.357439e+000, 3.461233e+000, 7.086393e+000, -6.981234e+000, -1.606081e-001, 7.658029e+000, 3.529613e+000, 4.076889e+000},
{5.988607e-001, 1.690107e+001, 5.881297e+000, -1.043576e+001, 5.035509e+000, -1.300704e+001, 6.415770e+000, -1.499638e-001, 8.267534e+000, 7.499675e+000, -5.462899e+000, 1.199341e+001, -1.276802e+001, -1.725029e+001, -9.584937e+000, -7.022388e+000, -2.914229e+000, -3.561004e+000, -8.696812e-001, 6.789772e+000, -1.479570e+001, 1.319975e+000, 2.872815e+000, 3.255827e+000, 3.608696e+000, -4.951747e-001, 7.083567e+000, 1.657448e+000, -4.955691e+000, -5.761613e+000, -2.318510e+000, -9.358357e+000, 1.803778e+000, -5.035476e+000, 3.381301e+000, -1.941089e-001, -3.659661e+000, -6.362114e+000, -3.292767e-001, 9.978301e+000, -1.468180e+000, 1.036449e+000, 8.147559e+000, -4.055303e+000, 1.035806e+000, -9.343036e-001, 2.624689e+000, 8.693395e+000, 3.219312e+000, -5.200225e+000, 2.876878e+000, -3.494941e+000, 6.906553e+000, -4.014420e-001, -1.564345e-002, 1.472240e+000, 1.898893e+000, 2.442028e+000, 1.625372e+000, -8.706030e+000, 4.941142e+000, 3.552699e+000, -2.951987e+000, 2.614746e+000, -9.346229e+000, 6.120806e+000, -3.357214e+000, 3.626482e+000, -3.841513e+000, -1.437940e+000, 1.587862e+001, -1.434538e+001, 1.378265e+000, 9.728566e+000, 1.378431e+001, -2.842840e-001, 5.338825e+000, -2.112117e+001, 2.058226e+001, 2.226178e+000, -2.105934e+001, -1.233075e+001, -9.911178e+000, 1.338334e+001, 2.185603e+001, -2.622428e+001, -6.028280e+000, 1.890787e+001, -3.498663e+001, 1.915684e+001, 8.022964e+000, 2.096520e+001, 2.547684e+000, -2.140772e+000, -8.641751e+000, -5.280347e+000, -1.512596e+000, 4.093267e-001, 5.241654e+000, -2.529993e+000, -6.654158e+000, 8.428863e+000, -1.182154e+000, -1.457312e+001, 1.561306e+000, -1.086967e+000, -5.591283e+000, -6.242829e-001, -6.218617e+000, 5.876606e+000, 1.262549e+000, 4.843196e+000, 1.434220e+000, 5.160811e+000, -3.196911e+000, -4.281407e-001, -5.060586e+000, 4.382774e-001, 3.088777e+000, -1.781220e+000, 1.600974e+000, 4.400742e+000, 4.302673e+000, -1.548129e+000, 3.318314e+000, -1.325201e-002, 5.936039e-001, -1.497412e+000, 1.548442e+000, 3.803136e+000, 2.593545e+000, 5.291411e+000, -3.349659e+000, -8.997380e-001, -6.869874e+000, 9.848239e-001, 1.165923e+000, -1.876643e+000, 6.043450e+000, -3.048895e+000, 1.220827e+000, 1.793087e+000, -3.510341e+000, -5.334393e+000, -1.796566e+000, 5.594960e+000, -2.986370e-001, 6.361988e-001, 4.206569e-001, 2.399071e+000, -1.453891e+001, -4.655621e+000, -7.698242e+000, -1.714256e-001, -1.313712e+001, -2.304538e+001, 3.019097e+000, -5.170574e+000, 2.869834e+001, -4.363359e+000, -1.140766e+001, 2.758158e+001, -8.696208e+000, -2.118041e+001, -6.236970e+000, 6.784439e-001, 1.146358e+001, 2.552037e+000, 1.324121e+001, 2.676607e+000, 1.814472e+000, -5.598639e+000, -9.661817e+000, 1.132707e+001, 8.500311e+000, -1.839420e+000, 3.108870e+000, 1.271464e+001, -1.092762e+001, 4.755586e+000, 5.249933e+000, 3.002823e+000, 3.664168e+000, -6.191892e+000, -3.177192e+000, 3.516018e+000, -5.771520e-001, -1.207786e+000, -4.968863e-001, -3.827956e+000},
{2.008201e+000, -3.819657e+000, 3.178862e-001, 9.959698e-001, -3.041284e+000, 1.329594e+000, 4.698155e+000, -2.157343e+001, -1.062348e+001, -3.722005e+000, -6.060258e-001, 1.580767e+001, -8.284784e+000, -1.090221e+001, 1.079084e+001, -6.411303e-001, 9.100134e+000, -2.313563e+000, -8.363814e+000, -6.509678e+000, 1.980097e+000, 4.801138e+000, 5.387118e+000, 5.095018e+000, -8.639155e+000, 3.668620e+000, 3.266031e+000, 3.911451e+000, -4.510297e+000, -8.164183e+000, -1.445430e+000, -4.583407e+000, 1.019359e+001, 5.458588e+000, 3.620684e+000, -4.364900e+000, 7.654506e+000, -6.687412e+000, 4.441231e+000, -7.544040e+000, 8.428202e-001, -6.200465e-001, 9.289124e-001, 5.848641e+000, 1.845211e+000, -9.021403e+000, 1.106211e+000, 6.679078e+000, 1.456726e+000, 2.062381e+000, 3.410300e+000, 2.213527e+000, -5.747426e+000, -2.299938e+000, 1.080747e+000, -2.070243e+000, -1.398568e+000, 3.701437e+000, 1.906671e+000, -1.291422e+000, -1.080534e-001, -1.794116e+000, -6.776365e-001, -7.388408e-001, 7.283034e-001, 2.507040e+000, 7.528562e+000, -4.019925e+000, -3.552040e+000, -2.764624e+000, -3.723563e+000, 1.448620e+001, 8.376459e+000, 1.944102e+000, 4.088704e+000, 3.074184e+000, 9.634457e+000, 1.157109e+001, 6.207807e+001, -1.910673e+001, -1.806977e+001, -3.409150e+001, -1.011315e+001, 2.075717e+001, -1.164711e+001, 3.664752e+001, 2.090164e+000, -1.695867e-001, 1.981187e+000, 4.563420e+000, -6.744784e+000, 1.924892e-001, 1.150925e+001, 5.060478e+000, -7.036215e+000, 5.952197e+000, -1.331527e+001, -1.822881e+000, -2.665942e+000, 2.689536e+000, -1.455983e+000, -1.326614e+000, 6.052351e+000, 7.593776e-001, 3.571789e-001, -1.083845e+000, 1.449381e+000, 3.068320e+000, -5.090977e+000, 9.684215e-001, -3.127001e-001, -1.865543e+000, 6.330424e-001, 6.573862e-001, -2.245651e+000, -5.863067e+000, -2.497423e+000, 1.623331e+000, -2.476641e+000, 7.873430e-001, 1.458673e-001, 1.386130e+000, 2.487062e+000, -4.498586e-001, 4.419128e-002, -5.807858e+000, -3.339383e+000, -3.786441e+000, 3.409787e+000, 2.728437e+000, -2.184389e+000, -4.613620e+000, -1.204837e+000, 7.936222e-002, 3.393727e+000, 6.290911e-001, -7.016421e-001, -1.145944e+000,

© ISO/IEC 2004 — All rights reserved


Copyright International Organization for Standardization
Provided by IHS under license with ISO
No reproduction or networking permitted without license from IHS
Not for Resale

-3.445879e-001, -1.807452e+000, -2.861114e+000, -1.341822e+000, 3.566937e+000, -3.247550e-001, 8.351293e-001, -1.025894e+000, -2.912392e-001, 3.143530e-001, -4.389195e+000, 5.351198e+000, 2.450838e+000, -1.160728e+001, 5.976222e+000, 3.187571e-002, -1.193761e-002, 1.309853e+001, 1.089184e+001, -6.302689e+000, -6.084981e+000, 2.284975e+000, -1.599278e+001, -3.222832e+001, -1.585693e+001, 3.473021e+000, 1.047066e+001, -7.589996e-001, -4.522668e+000, -3.214789e+000, 6.848522e+000, -3.987559e+000, 2.661415e-002, -4.102083e+000, -5.876118e+000, -5.267066e+000, 1.390345e+001, -5.867894e+000, 8.793213e+000, -1.293353e+001, 1.053081e+001, -2.899079e+000, 2.451269e+000, -3.190239e+000, 6.249730e+000, -9.122768e-001, -1.486324e+000, -7.787925e+000, -5.723179e+000, -1.272255e+001, -7.576485e+000, 3.212521e+000},

{3.768549e+000, 2.991978e+000, 4.972524e+000, 1.177929e+001, -1.062644e+001, -1.729030e+001, 2.295133e+001, -7.123193e+000, 1.493824e+001, 1.551685e+000, -7.904935e+000, -6.000920e+000, -6.282292e+000, -1.982552e+000, 1.522602e+001, -7.164052e+000, -2.728640e+000, 8.994800e+000, -2.901953e+000, -6.716492e+000, 1.346693e+000, 2.364774e+000, -4.562199e+000, -1.167009e+001, 2.581176e-001, -1.513830e+000, 2.206177e+000, -6.914283e+000, 2.095581e+000, 8.990309e-001, 2.649097e+000, -2.850062e+000, 5.534475e+000, 4.239453e+000, -7.899483e-001, 4.359114e+000, 4.104998e+000, 9.672298e+000, -2.415713e+000, -7.237052e+000, -1.450366e+000, 2.837149e+000, 5.486513e-001, -2.704522e+000, -9.731743e-001, 4.630537e+000, 2.564789e+000, 5.031218e-001, 1.352382e+000, -1.147880e+000, 1.096930e+000, 6.093983e-001, 7.414751e-001, 7.845652e-001, -1.272270e-001, 2.293769e+000, 3.166540e+000, 6.601065e-001, -3.482263e+000, 8.744262e-001, 1.586335e-001, 2.849744e+000, -1.593053e+000, -1.209964e+000, 9.217350e-001, -2.578421e+000, -3.547688e+000, 2.139168e-001, 2.754407e-001, 1.964507e+000, -8.941270e+000, -5.784283e+000, -4.505274e+000, -1.624133e+001, -2.181863e+000, 9.871783e+000, 1.984685e+001, -4.300846e+001, 4.423536e+000, 5.575686e-001, -1.380477e+001, 4.882976e+001, 5.757670e+000, 1.569972e+000, -2.466106e+001, 1.899467e+001, -2.435769e+001, -2.746182e+000, -1.215782e+001, 4.273699e+000, 6.046193e-001, 7.211147e+000, -1.255768e+000, 1.560563e+000, -3.751731e-001, 3.367078e+000, -1.464054e+001, -1.095811e+001, 5.736903e+000, 3.617401e+000, -2.789013e+000, -1.114612e+000, 5.721735e+000, -6.897184e+000, 9.458397e+000, 1.258622e+001, -2.504034e+000, -1.018156e+001, -1.694378e+000, 3.157216e+000, -8.348550e+000, -3.184583e+000, -2.897001e+000, 3.887014e+000, 1.729516e+000, -8.420975e+000, 2.114133e+000, -1.598628e+000, -4.111250e+000, 2.075931e+000, -5.166058e+000, 3.861812e+000, 3.333604e+000, 6.368892e+000, 1.108206e+001, -5.011955e+000, 5.537182e+000, 7.727960e-001, -2.588688e+000, 5.100584e+000, 8.934884e-001, -6.051753e+000, -2.531593e+000, -7.907938e-001, 8.817870e-001, -1.211211e+000, 1.534545e+000, -4.065622e-003, -6.901985e-001, 1.764889e-002, -1.492171e+000, 2.416661e-002, 1.148343e+000, -6.121951e-001, 1.237677e+000, -3.765874e+000, -5.093269e+000, -2.404654e+000, 1.574085e+000, -3.390537e-002, 3.595355e+000, 6.953837e+000, 4.916793e-002, 2.412906e+000, 1.142428e+001, -6.152195e+000, 1.594066e+001, -2.160472e+000, -1.218934e+001, -1.123293e+001, -3.375737e+000, -3.945107e+000, -1.088070e-001, -1.257535e+001, 3.508212e+001, 2.324228e+000, -1.319054e+001, 1.860679e+001, 6.673966e+000, 5.502740e-001, -1.296155e+001, -8.313886e+000, 5.574025e-001, -2.783133e+000, -2.695989e+000, 1.635007e+000, -1.452983e+000, 1.845151e+000, 1.062658e+000, 4.073778e-001, 5.460121e+000, 5.975668e+000, -3.296599e+000, -8.794277e+000, 9.125599e-001, 1.096373e+000, 4.595218e-001, -3.293908e+000, -6.008993e+000, -2.621076e+000},

{7.767810e+000, 3.243700e-001, 1.973377e-001, -2.588925e-001, 1.588145e+001, -8.427475e+000, 5.782943e+000, 8.836007e-003, 6.831267e+000, -8.069068e+000, -4.204263e+000, -2.858580e+000, 1.352164e+000, 7.181027e+000, 7.971890e+000, -1.238047e+001, 1.202367e+001, -1.126369e+001, 1.755556e+001, 1.385789e+000, -7.892587e+000, 5.093742e+000, 2.100113e+000, 2.706766e+000, 1.465102e+000, -6.324698e+000, 5.620918e+000, 3.330189e+000, -1.986158e+000, -2.638071e+000, 1.227212e-001, -4.170910e+000, 9.416798e+000, -9.688743e-001, 2.179422e+000, -4.185336e+000, 9.171011e-002, -2.776254e+000, 1.619074e+000, -2.849273e+000, -1.489131e+000, -3.988691e+000, 3.964308e+000, -4.870655e+000, -8.050426e-001, 1.455844e+000, 4.122399e+000, -3.799081e+000, -2.404603e+000, 2.135504e+000, 3.091166e+000, 5.034218e+000, -2.682882e+000, 2.469315e+000, -5.207968e-001, -3.136700e-001, 2.365944e+000, 3.740190e+000, 3.106221e-001, -2.623257e-001, -1.846991e+000, 8.158288e-001, 1.120196e-001, 2.517566e+000, 1.010420e+000, -3.683708e+000, -3.297513e+000, 2.433595e+000, -4.182343e-001, -6.748857e-001, -1.196011e+001, 6.525995e+000, -5.956433e+000, -5.398338e+000, -2.060397e+001, -8.494747e+000, -1.428828e+001, -1.297975e+001, 2.706571e+000, -2.968889e+001, 2.369365e+001, 5.778765e-001, -1.007848e+001, -2.078684e+001, -3.291264e+001, -3.422007e+001, -2.716388e+001, -5.990228e+000, -3.094461e+000, -8.436144e+000, -3.943189e+000, 1.488586e+001, 6.529815e+000, -2.303088e+001, 2.134467e+000, -1.226398e+001, 1.506787e+001, -1.008753e+000, -7.888652e+000, -5.926110e+000, -1.257032e+001, 9.612561e+000, -9.769126e+000, -5.740923e+000, -


© ISO/IEC 2004 — All rights reserved

Copyright International Organization for Standardization
Provided by IHS under license with ISO
No reproduction or networking permitted without license from IHS
Not for Resale

1.020570e+001, 3.025869e+000, 9.122371e+000, -5.809851e+000, 1.229911e+000, 2.122469e+000, -1.785493e+000, -9.175227e+000, 3.673519e+000, 7.024610e+000, -4.030009e+000, 2.256362e+000, 1.494584e+000, 5.473676e+000, -2.037213e+000, -4.968058e+000, -1.544909e+000, 4.157646e+000, -5.787954e-001, -3.097783e-001, -4.292746e+000, 4.440279e+000, -1.630679e+000, -2.983553e+000, 3.900967e+000, 7.181640e+000, 5.647922e+000, -5.692890e+000, -4.608138e-001, -4.170848e+000, -3.649739e+000, 9.464795e-001, -5.760627e+000, -4.604374e+000, -5.889485e-001, 1.381715e+000, 1.818562e+000, 6.222962e+000, -2.647833e+000, -4.010232e+000, -3.367044e+000, 8.967199e-001, 9.269328e-001, -4.975084e-002, -3.723726e+000, 4.468279e+000, 2.792730e+000, -1.040798e+000, -1.110276e+001, 8.114821e+000, 2.174158e+001, 7.458562e-002, -1.418390e+000, 9.307072e+000, -3.114413e+000, 2.287599e+001, -3.679100e+000, -4.270791e+000, -8.721320e+000, -1.621812e+001, 1.405814e+001, 1.042658e+001, 4.274945e+001, -1.974986e+001, -9.766468e+000, 8.822480e+000, -5.822741e+000, -1.498736e+001, -1.431248e+001, 1.554989e+001, -1.067098e+001, -6.105697e+000, -3.834901e+000, 1.725842e+001, -1.060622e+000, -1.000574e+001, 1.091141e+001, -3.428269e+000, 2.155630e-001, -4.207947e+000, 2.314997e-001, -3.568826e-001, -6.763479e+000, 5.112649e+000, 4.553083e+000, 3.807751e-002},
{3.356747e+000, 9.361921e+000, -3.101666e+000, -5.245606e+000, 1.162423e+001, 1.122152e+001, 4.921280e+000, 1.128556e+001, -1.126258e+001, 3.105562e+000, 2.379924e+000, -4.882634e+000, 6.487117e+000, -1.189751e+001, -7.720289e+000, 2.424686e+000, 5.001112e+000, -7.527026e+000, -5.482915e+000, 1.079112e+001, -1.200963e+000, 2.210306e-001, 8.821193e+000, -5.634036e-001, 8.195956e+000, -1.026839e+001, 3.212810e+000, -4.778402e+000, 1.160260e+001, 1.012818e+001, -8.161575e+000, 3.480175e+000, -3.671173e+000, 4.731576e+000, 5.929809e+000, 1.214399e+000, 3.549076e+000, 1.077899e+001, -1.482069e+000, 3.105508e+000, -2.882981e+000, 3.016993e+000, -7.679885e+000, -7.583690e-001, -9.462612e-001, 6.711941e-001, 5.779732e+000, -3.019153e+000, 8.277742e+000, -9.170067e+000, 6.060472e+000, 7.509727e+000, -2.135612e+000, -1.946405e+000, -2.982458e+000, -3.950354e-001, 5.257103e+000, -3.073479e+000, -3.211292e+000, -2.462586e-001, -1.329450e-001, 4.895629e+000, 2.911486e+000, -2.146102e+000, 4.868924e+000, 3.409351e-001, 1.731720e+000, 1.796497e+000, 2.677178e+000, -4.441310e+000, -3.239459e+000, -1.793394e+001, -2.223113e+000, 1.275470e+001, -7.066359e+000, 2.174127e+000, 5.776597e+000, 1.273434e+001, -9.461227e+000, 5.536841e+001, 2.720520e+001, 2.004330e+001, -4.034563e+001, 3.402211e+001, -2.276860e+001, 1.540565e+001, 2.837116e+000, 7.058128e+000, -1.064325e+001, -1.089918e+001, 4.497093e+000, 3.922714e+000, 1.193735e+001, 2.294782e+000, -8.436819e+000, -8.477287e+000, 3.259492e+000, -9.648321e+000, 6.927925e+000, 4.409074e+000, -3.523384e-001, 5.519441e+000, -1.170729e+000, 8.666646e+000, -9.855796e-001, -1.190775e+001, 5.048297e+000, 5.231464e-001, 4.777416e+000, 7.061495e+000, 5.607881e+000, 5.342126e+000, -1.636777e+000, 5.104552e+000, -1.148887e+000, 2.715440e-001, 1.619661e+000, -1.377555e+000, -7.778331e+000, -5.654777e-001, 4.104778e+000, -2.519068e+000, 3.480255e+000, 1.568292e+000, -3.091808e+000, -2.120306e+000, -4.242374e+000, 4.119281e-001, 6.745322e+000, 3.193508e-001, 4.100324e+000, 9.155592e+000, 3.373954e+000, -3.143026e+000, -2.109923e+000, 3.725053e+000, -2.234773e+000, -1.161601e+000, 3.541774e+000, -4.338236e+000, 4.189177e+000, -1.145220e+000, -1.753579e+000, -6.065239e+000, -3.129961e+000, 5.318786e+000, -3.321806e+000, -5.804260e+000, -5.827582e-002, 4.278937e-001, -3.210613e-001, 9.282375e+000, 5.886916e+000, 1.339676e+000, -1.683848e+001, 1.984932e+000, -1.376579e+000, -9.011924e+000, 1.182930e+001, -4.430797e+000, -5.368423e+000, -1.246024e+001, -6.367369e+000, -1.950927e+000, -3.126393e+000, -4.333793e+000, 3.528696e+001, 2.021592e+001, -9.955166e+000, -3.064560e+000, -1.074730e+001, -3.834923e+000, 1.717411e+001, 4.054134e+000, 1.444853e+000, -5.414018e+000, -3.263162e+000, -2.355936e-001, -1.058478e+001, -7.216810e-001, -1.948055e+000, 6.714631e+000, 7.229735e+000, -1.956608e+000, 2.134989e+000, 1.216087e+001, 7.476365e-001, 4.790703e+000, -3.614329e+000, -3.855420e+000},
{-1.273533e+001, -2.208903e+000, 2.499253e+001, -3.077653e+000, 1.550581e+001, -7.712792e+000, -4.361850e+000, -1.205090e+001, 3.052626e+000, 7.011006e+000, 2.110651e+001, -5.503668e+000, 2.209468e+001, 1.921974e+000, 7.077337e+000, 9.695152e+000, 1.962776e+001, 1.515626e+000, 2.034880e+001, 1.582436e-001, -3.401626e+000, -5.203828e+000, 1.603510e+001, -1.131967e+000, -6.533727e-001, -5.374505e+000, -1.694569e+000, 6.920960e+000, -1.462680e+000, 1.541551e+000, -5.460532e+000, 6.653680e+000, -8.506801e+000, -5.116770e+000, -1.790454e+000, -2.920408e-001, 5.149446e+000, -5.474329e-001, 1.706683e+000, 1.217415e+001, 4.173602e-001, -1.151811e+000, 3.370769e+000, 7.033844e-001, -3.219858e+000, -7.321687e+000, 4.258760e+000, -5.291745e+000, -3.511660e+000, 5.409535e+000, -3.595959e+000, -4.677859e+000, -4.631450e+000, 4.833657e+000, -3.772964e+000, 1.234044e+000, 1.920303e+000, 5.213510e+000, 3.399786e+000, -1.884771e+000, 3.758926e+000, 1.465859e+000, -2.398042e+000, 2.236850e+000, -3.595072e+000, 1.709349e+000, -5.909031e-001, -1.251302e+000, -1.451846e+000, 3.477076e+000, 1.543194e+001, -1.957217e+001, 1.238971e+001, -5.714675e+000,

© ISO/IEC 2004 — All rights reserved


Copyright International Organization for Standardization
Provided by IHS under license with ISO
No reproduction or networking permitted without license from IHS
Not for Resale

4.873916e+000, -3.589742e-001, -3.018209e+000, -1.025077e+001, 1.577332e+001, -1.977707e+001, 1.005981e+001,
1.885360e+001, 1.787276e+001, 7.156961e-001, -1.603020e+001, 2.563713e+001, 2.112672e+001, 2.372871e+001, -1.486580e+001,
1.435725e+001, 6.632172e+000, 1.420375e+000, -2.137869e+001, -2.448150e+001, -7.551542e+000, -1.091961e+001,
1.325969e+001, -1.066066e+000, 8.786613e+000, -1.406655e+000, -2.524371e+000, 5.708979e+000, -1.043183e+001, -5.015862e-
001, -9.398124e-001, 5.950636e+000, 3.229140e+000, -4.982389e+000, 5.144300e+000, -7.637650e+000, -5.986295e+000,
4.187479e+000, -3.986681e+000, 7.040883e+000, -3.171189e+000, 1.501663e+000, -5.994774e+000, 4.060862e+000,
2.495462e+000, -6.466379e+000, 7.087566e+000, -2.604807e+000, 1.555821e-001, -1.227074e+001, 1.806811e+000, 6.987168e+000,
3.623657e+000, -1.873422e+000, -7.373549e-002, 4.321108e+000, -2.065351e+000, 3.674065e+000, 4.673165e-001, -2.561216e+000,
-8.635156e+000, -7.731224e+000, -1.557547e+000, -6.960430e+000, -3.379555e-001, -2.824183e+000, 1.875473e+000,
4.152312e+000, 1.745684e+000, -1.136430e+000, 3.072444e+000, 3.965132e+000, 5.151441e+000, -5.437539e+000, -
4.751382e+000, -2.503956e+000, 9.638824e-002, 1.184580e+001, -8.763405e+000, 7.872705e-001, -7.343157e+000, -4.349896e+000,
-6.835769e+000, -8.412368e+000, -3.827004e+000, -2.969436e+001, -2.026634e+000, -1.106869e+001, 2.698306e+001, -9.869934e-
001, -7.563688e+000, -1.234138e+001, 2.225961e+001, -1.394995e+001, 7.852310e+000, 9.398702e+000, 8.764361e+000, -
1.701974e+001, -1.286825e+001, 8.374353e+000, -2.380945e+000, -1.274676e+001, 3.869586e-001, -4.300128e+000, -
8.347624e+000, 1.170240e+001, -2.170203e+000, -5.743820e-001, 1.485799e+000, 1.029464e-001, -2.999980e+000, -2.984778e+000,
8.742525e+000, -7.341434e+000, -2.928257e+000, -5.440497e+000},
{8.078147e+000, 2.992692e+000, -1.760282e+001, 2.969773e+000, -3.351870e+000, 6.100545e+000, -1.225595e+001, -
1.405979e+001, 5.081334e+000, 8.164443e-003, 4.552192e+000, -9.361187e+000, 9.000735e+000, -1.420005e+001, 7.901556e-001,
1.427732e+001, -1.359695e+001, 4.356710e-001, 1.043410e+001, 2.381670e+000, -7.397891e+000, 1.221819e+001, -7.311826e+000,
1.073911e+001, 2.773765e+000, 1.505349e-001, -7.245144e+000, -1.373773e+000, -4.669903e+000, -3.572684e-001, 3.388688e+000,
1.863475e+000, 6.296522e+000, 3.170816e+000, 1.632479e-001, -1.242639e+000, 1.295022e+001, -4.881854e+000, -4.744229e+000,
-5.447101e-001, -1.092980e+000, 3.251078e+000, -2.859632e+000, 8.004427e+000, 5.975624e+000, 1.096474e+001, -
1.159054e+000, 1.755625e+000, 6.536355e+000, -2.332352e+000, 2.247789e+000, 4.040028e+000, -7.181056e+000, 2.163788e-001,
-1.314826e+000, -6.385213e-002, -4.484938e+000, -2.270354e+000, -8.034136e-001, -1.544884e-001, 4.723433e+000, -
6.238778e+000, -6.699780e+000, 6.804756e+000, 8.001413e+000, 5.107777e+000, -1.827208e+000, 4.680768e+000, -
1.800063e+000, -1.611700e-001, 5.359301e-001, -7.994386e+000, -1.732894e+001, 2.288532e+000, 1.004840e+001, 3.631046e+000,
-1.187136e+001, -5.182756e+000, -2.336771e+001, 9.888511e-001, -1.527439e+001, -8.637313e+000, -5.271100e+001,
4.327073e+000, 8.319076e+000, -8.513716e+000, -6.439650e+000, 1.610372e-001, -1.704241e+001, 3.349561e+001, -
3.171986e+001, -1.748834e+001, -2.338812e+001, -4.522199e+000, 7.280855e+000, -6.509880e+000, -1.966863e+001,
1.704102e+001, 4.230746e+000, -5.537249e-001, 1.125913e+000, 2.801277e+000, -2.367509e+000, 4.620014e+000, -5.862458e+000,
4.198086e+000, -3.395602e+000, 1.220651e+000, -1.184777e+000, -1.165404e+001, -9.358721e+000, -6.314609e+000, -
8.320170e+000, 1.294999e+001, -3.081564e+000, -2.520924e-001, 1.658550e+000, 2.170850e+000, 2.152947e+000, 3.068444e+000,
4.853337e+000, 1.344148e+001, 1.943762e+000, 2.607832e+000, -1.745870e-002, -3.277018e+000, -2.025910e+000, -
7.512434e+000, -2.565723e-001, 7.007375e+000, 4.974865e+000, -1.220082e+001, -4.324674e+000, 1.868641e+000, 3.538343e+000,
-3.367402e+000, -2.272984e+000, -1.303962e+000, 2.021033e+000, -5.452117e-003, 2.858934e+000, -6.512542e+000, -
1.099068e+000, 3.417787e+000, 2.196171e+000, -9.855863e-001, -1.280699e+000, -3.813484e+000, -9.623730e-001, -
2.939438e+000, -7.601016e+000, 2.391086e+000, -1.480902e+000, -6.559225e+000, -1.595802e+001, -3.393522e+000,
7.941383e+000, -6.810492e+000, -1.697279e+001, 1.889926e+001, 8.476162e-001, -4.038325e+001, 6.033751e+000, 8.566959e+000,
-6.318402e+000, -3.233597e+000, -2.129681e+001, -1.330767e+000, 3.220445e+001, -1.478508e+001, 4.278085e+000,
2.573500e+000, -8.101842e+000, 3.513712e+001, 2.877423e+000, -3.163857e+000, 9.516782e-001, -5.453510e+000, -
8.000325e+000, -4.238925e+000, 3.254774e+000, 1.552227e+000, -9.532231e+000, -6.196812e+000, -5.633458e+000,
9.415871e+000, 2.515729e+000, 2.648295e+000, -7.111601e+000, 4.994744e-001},
{5.273496e+000, -4.753019e+000, 3.673642e+000, -5.105464e+000, 8.245049e+000, 1.477334e+000, -1.708956e+001,
4.647650e+000, 5.648814e+000, 2.289990e+001, 1.711326e+001, -1.866257e+001, -3.097431e-001, -4.874218e+000, 1.884920e+000,
6.043179e+000, -2.118215e+001, -1.502355e+001, -4.687859e+000, 9.338275e+000, -4.117106e+000, 9.601929e+000,
5.441234e+000, 1.173876e+001, 3.954728e+000, -1.428602e-001, -1.622327e+001, 3.445315e+000, 6.217145e+000, 1.966020e+000,
-8.102357e-001, -6.356222e+000, -8.522061e+000, 1.271109e+001, -3.165273e+000, -7.580286e+000, 1.071213e+001, -
1.053018e+000, 4.556103e+000, -1.265622e+000, -7.294715e+000, 3.342234e+000, -1.406119e+000, 1.251653e+000, 3.456207e-002,


© ISO/IEC 2004 — All rights reserved

Copyright International Organization for Standardization
Provided by IHS under license with ISO
No reproduction or networking permitted without license from IHS
Not for Resale

-3.060602e+000, 1.140614e+000, -2.093027e+000, 2.773573e+000, 4.132095e+000, -3.835655e+000, 2.533752e+000, 6.160827e-001, 9.687472e+000, -1.448402e+000, -9.161473e-001, -8.964062e-001, 2.744467e+000, 8.863160e+000, 2.068733e+000, -1.352784e+000, 2.255143e-001, -7.768809e-001, 8.786040e-001, -4.637922e+000, -2.480718e+000, -9.061660e-001, -1.126875e+000, 1.974563e-001, 4.172212e+000, -4.278906e+000, -8.750924e+000, 5.255215e+000, 2.317679e+000, -8.816114e+000, -6.301426e-001, -1.015841e-001, 4.996780e+000, -1.698520e+000, -2.009468e+001, 1.765230e+001, -5.761428e+000, -2.411359e+001, 1.900666e+001, 1.606341e+001, -8.972715e+000, -5.343216e+001, -8.358555e-001, 2.074526e+001, -3.037720e+001, 1.120503e+001, -1.335245e+001, -3.683531e+001, 8.766056e+000, -1.622774e+001, 1.627860e+000, -3.224324e+000, -1.012410e+001, 4.302859e+000, -2.140047e+000, 5.793366e+000, -1.014710e+000, 3.791084e+000, 2.054491e+000, -1.260142e+000, -6.174265e+000, -8.471026e-001, -9.764456e+000, -1.872971e+000, 9.711093e-001, 4.824794e+000, 5.471234e+000, 4.245683e+000, 9.349326e-002, -7.323167e+000, 4.667899e+000, -7.744574e-001, -2.824181e+000, -3.831853e+000, -2.482631e+000, -1.488364e+000, 3.667359e+000, 6.021514e-002, -2.215153e+000, 1.077785e+001, 2.001895e+000, -2.249920e+000, -1.149872e+000, -4.493583e+000, 2.591105e+000, 4.544322e+000, -6.550466e+000, -5.754176e+000, 3.105206e+000, 1.853713e-001, -3.500864e+000, 4.551594e-002, 1.892909e+000, 5.331172e+000, 2.472176e+000, 5.051965e-001, 1.850714e+000, 2.579704e-001, 3.084033e+000, 1.865040e-001, -4.593908e-001, 1.911681e+000, 5.884828e+000, -5.785120e-001, 4.080768e+000, -1.058517e+000, 1.289045e+001, -1.613878e+000, 9.423877e-001, 4.961320e+000, 3.514725e+000, 7.867055e+000, 5.140491e+000, -2.396329e+000, -5.625884e+000, -1.191801e+001, 6.586167e+000, 9.624968e+000, -1.299269e+001, 1.036969e+001, -2.839461e+001, -1.905923e+001, -1.375417e+000, -1.978019e+001, -2.550996e-001, -8.782095e+000, -1.331518e+001, -8.383962e+000, 7.657816e+000, 5.250109e+000, -1.389576e+001, -2.262272e+000, 6.238931e+000, 2.933649e+001, -4.119127e+000, -2.963148e+000, -3.478084e+000, -6.898857e+000, -1.314207e+000, -2.166474e+000, 2.564880e+000, 4.152377e-001, 2.845568e+000, 3.141174e+000, 1.997594e+000},

{-7.468367e+000, -1.254546e+001, 1.748645e+001, 5.557271e+000, 1.008448e+001, 7.665886e+000, -1.201420e+001, 2.143339e+000, -1.627262e+000, -1.511218e+001, -2.071391e+001, 7.281822e+000, -2.038171e+001, 1.172198e+001, 1.044046e+001, 1.247518e+001, 9.928362e+000, 8.932422e+000, 2.192556e+000, -1.002682e+001, -9.830370e+000, 1.110969e+001, 2.052818e+001, 7.781223e+000, -9.393943e-001, -1.584637e+001, -3.280047e+000, -1.403953e+001, 8.051381e+000, 6.952552e+000, 6.333181e+000, -5.749451e-001, 4.655648e-001, 1.170756e+001, 2.324290e+000, -9.251400e+000, -2.380408e+000, -5.299578e+000, 2.978692e+000, 6.139892e+000, -1.572179e-001, -6.634611e+000, 5.247116e+000, 1.432180e-001, 1.101429e+000, 1.281794e+000, -7.894420e+000, -4.946599e+000, 7.934534e+000, -1.391423e+000, 3.242868e-001, 7.960790e-001, -1.777787e+000, 2.199796e+000, -3.309123e+000, 1.840537e+000, -1.030335e+001, -6.424095e+000, -3.152877e+000, 2.877759e+000, -8.624100e+000, -2.270327e+000, 1.164184e+001, -8.400562e-001, -1.636093e+000, -4.524968e+000, -8.788670e-001, -1.195360e+000, 4.794311e+000, 1.363399e+000, -3.728281e+000, -5.047208e+000, -6.461994e-001, 3.950750e+000, 3.664769e+000, -1.310014e+001, 6.179102e+000, 5.971800e+000, -1.135132e+001, 1.404493e+001, 3.146444e-001, 1.979793e+000, 4.400413e+000, 7.773319e+000, -6.464001e+000, 3.333382e+001, -5.937480e+001, 1.039693e+001, 5.425086e+001, 5.663261e+001, -1.045216e+001, 2.436862e+001, -2.828396e-001, -1.470284e+001, 1.221242e+001, 1.928851e+001, -3.323823e+000, -7.528887e+000, 3.472186e+000, -1.417505e+001, -2.209675e+000, -1.222757e+001, 2.557970e+000, -8.082134e+000, -1.897505e+001, -3.783650e+000, -3.498975e+000, 5.242424e+000, -3.259651e+000, 7.518092e+000, -1.141727e+000, 5.128712e+000, -7.413574e+000, 2.793684e+000, 4.278635e+000, -1.419125e-003, 3.665817e+000, 5.091883e+000, 1.469817e+000, 1.190074e+000, -8.167569e+000, 5.266601e+000, 5.892085e+000, -1.104816e+001, 6.170151e-001, 7.400751e+000, -3.669432e+000, 1.902343e+000, -1.210751e+000, -9.671464e+000, -1.496127e+000, 5.411268e+000, 8.086062e+000, -2.244793e+000, 1.142916e-001, 6.769626e+000, -2.044138e+000, -1.871483e+000, -1.161355e+000, 5.696902e-001, 7.414236e-001, 7.283637e+000, -2.175352e+000, 4.122971e+000, 6.099334e-001, -3.252944e+000, 2.668913e+000, -2.218097e+000, 7.186158e-003, -3.030594e+000, 9.796243e+000, 1.150313e+001, -1.603896e+001, 8.670288e+000, -6.429327e+000, 8.685989e+000, -4.719229e+000, -1.671125e+000, 1.445479e+001, -9.169737e+000, 1.200130e+001, -1.351895e+000, -4.051348e+000, 2.023393e+001, -1.153964e+001, 2.762029e+001, -5.021184e-001, -2.902122e+001, 9.022165e+000, 9.775166e+000, -1.377722e+001, -9.233910e+000, 2.105083e-001, 7.791422e+000, -3.141562e+000, -6.726556e+000, -2.261277e+001, -2.832193e+000, 3.574677e+000, 2.125673e+000, 6.730326e+000, 1.701577e+001, -7.779209e+000, -4.840799e+000, 7.540781e+000, 4.369249e-001, -6.758538e+000, 1.214506e+001, -4.526000e+000, 3.949206e+000},

{1.739549e+001, 5.686322e+000, -9.512956e+000, -1.401952e+001, -2.234413e+000, 7.054089e+000, 7.544667e+000, 4.466625e+000, -2.226317e+000, -1.737436e+001, 2.186090e+001, -9.223390e+000, -1.447444e+001, -7.901762e+000,

© ISO/IEC 2004 — All rights reserved


Copyright International Organization for Standardization
Provided by IHS under license with ISO
No reproduction or networking permitted without license from IHS
Not for Resale

8.950298e+000, -4.468424e+000, 3.369084e+000, 6.863875e+000, 1.636092e+001, -2.021665e+001, 6.152509e+000, 1.390229e+001, 1.776738e+000, 2.612040e+000, 1.697769e+000, -8.335135e+000, -1.267773e+001, -5.879686e+000, -2.511222e-001, -3.191017e+000, -1.533017e+000, 4.503068e+000, -1.472209e+000, 3.149655e+000, -7.110419e+000, 1.147744e-001, -1.532544e+000, -1.118807e+001, -2.045682e+000, 3.278908e+000, 1.141799e+001, 4.843956e-002, -4.597860e+000, -5.046371e+000, 4.153021e+000, -2.139838e+000, 4.999897e+000, 3.813465e+000, -1.018789e+000, -3.495035e+000, 3.541826e+000, -2.127225e+000, 2.260634e+000, 2.948163e+000, 1.091321e+000, 6.148459e+000, -1.577819e+000, -5.590065e+000, 6.590014e+000, 3.532878e+000, 5.779018e+000, 1.909321e+000, -3.236596e+000, 5.153749e+000, 1.678312e+000, -1.888925e+000, 2.172715e+000, -9.721971e+000, -1.389400e+000, 2.708472e+000, -4.018770e+000, -3.793922e+000, -1.022382e+001, 9.552881e+000, -3.548944e+000, 4.058704e+000, -1.810611e+001, 3.776953e+001, -3.547968e+000, -1.960030e+000, -7.799166e-001, 1.904578e+001, -1.190448e+001, -2.022149e+000, 4.851543e+001, 3.854483e+001, -1.766859e+001, -4.322986e+001, -1.856173e+001, 4.652007e+000, -2.237846e+001, 9.482553e+000, 1.883576e+000, -7.370360e+000, 3.045577e+000, -1.890199e+001, 2.695404e+000, 2.402169e+001, 1.411941e+001, 1.143530e+001, 7.416625e+000, 8.402711e+000, -6.492972e+000, -5.398410e+000, -7.689731e+000, -5.012249e+000, 1.884891e+000, 5.259837e+000, 1.223130e+000, 7.091223e+000, 2.721649e+000, -2.714398e+000, 8.621458e+000, 1.147140e+000, 9.003627e+000, 6.044063e+000, 6.374331e+000, -1.751977e+000, 3.691969e-001, 7.796014e+000, 1.681497e+000, 1.093097e+001, -9.079167e-001, 8.239239e+000, -3.856320e+000, 3.500238e+000, -1.101169e+000, 6.927848e+000, 8.505368e+000, 8.678067e+000, -2.059635e-001, 1.839178e+000, -4.874641e+000, -7.198308e-001, -2.611017e+000, -5.688793e+000, 6.671999e-001, -2.650513e+000, 1.827467e+000, -4.419114e-001, 2.527817e+000, -3.150910e-001, -5.652888e+000, -5.126094e+000, 3.436193e+000, -8.597231e+000, 1.888938e+000, -3.780053e+000, 2.727398e+000, -6.409470e+000, -1.511109e+001, -3.011139e+000, -6.067719e+000, -9.024786e+000, -2.337831e+000, 9.757451e+000, -8.513550e+000, -7.293919e+000, -5.660387e+000, -8.033296e-001, -2.254674e+001, 1.857740e+001, 9.468646e+000, -2.500566e+001, 1.737018e+000, 8.476060e+000, 1.351269e+001, -1.242226e+001, 6.827195e+000, 1.535579e+001, -1.996958e+001, 1.487590e+001, -9.520008e+000, -2.090194e+001, -1.877333e+000, 2.031044e+001, 1.219881e+000, 9.378061e+000, -7.082934e+000, -3.371242e-001, 8.024433e+000, 8.807649e+000, 3.327016e+000, 1.065370e+001, -4.775453e+000, 7.390477e+000, -3.428637e+000, 1.276732e+001, -6.108949e+000, -1.590485e+000},
{5.632776e+000, 1.183433e+000, -7.355048e+000, -1.163821e+001, 1.352277e+000, -4.422704e+000, -9.477343e+000, -3.589643e+000, 2.598952e+001, 3.049350e+000, -5.940799e+000, 3.910190e+000, -1.302782e+001, 6.687257e+000, 2.715071e+001, -2.834472e+001, 1.035488e+001, 2.232670e+000, -1.460881e+001, 1.575621e+001, -7.021763e+000, -9.115354e+000, 1.323485e+001, 1.201782e+001, 1.322858e+001, 1.951744e+000, -9.832465e-002, 3.448202e+000, -7.227352e+000, 2.394767e+000, 7.725107e+000, 1.182758e-002, 2.833965e+000, 4.263182e+000, -1.327789e+000, -3.332816e+000, 2.226852e+000, 2.091480e+000, 3.676356e+000, 3.873194e+000, -3.211575e+000, -1.756688e+000, 9.190592e-001, -1.327807e+001, -6.718157e+000, -6.369464e+000, 6.660227e+000, 1.912303e+000, -7.648840e+000, -3.237461e+000, -9.288326e-001, 3.631324e+000, -1.073562e+000, 6.110249e-001, 1.443090e+000, -2.738882e+000, 2.796143e+000, -6.701955e+000, 5.290598e+000, 3.456760e+000, 4.401694e+000, -1.012017e+000, -2.053469e+000, 5.203800e+000, -2.484842e-001, -2.771945e+000, -2.841637e+000, -2.270543e-001, 3.427284e+000, -3.266225e+000, -1.488002e+001, -1.431439e+001, 7.089704e+000, -2.566158e-001, 2.544373e+000, 1.488534e+000, -8.740602e+000, 1.364380e+001, -1.051872e+001, -4.454895e+000, 7.647097e+000, -1.016351e+001, -7.673815e+000, -4.304179e+000, 3.991377e+001, 1.538124e+001, 4.786931e+000, -4.048307e+000, 3.210431e+000, -5.026354e+000, -3.795820e+001, -5.973206e+000, -1.819685e+000, -2.115172e+001, 2.069244e+001, 1.560154e+001, 1.279635e+001, -3.023018e+001, 9.457853e+000, -4.268908e+000, -1.058672e+001, 2.128615e+001, 3.233208e+000, 1.702427e+000, 1.485998e+001, 1.838150e+001, -1.168370e+001, 3.498509e+000, 1.210854e+000, 5.267197e+000, -4.180686e+000, 1.959139e+001, -2.324618e+000, 1.340960e+001, -9.373971e-001, -1.198002e+001, 3.856312e+000, -1.486186e+000, -5.448637e+000, 2.052317e+000, 4.381201e+000, 3.309916e+000, 1.098773e+000, 5.378132e+000, 3.982982e+000, -1.710732e+000, -6.744335e-001, -5.817840e+000, -1.935410e+000, -4.184307e+000, 4.355647e+000, -4.485740e+000, -4.340737e+000, -9.981108e+000, -6.278696e+000, -3.909882e+000, 6.731500e+000, -2.155786e+000, 7.027146e-001, -5.636435e+000, -3.206322e+000, 1.507595e-001, -8.600491e-001, -5.398811e-001, 4.703612e+000, 9.772420e+000, 3.850382e+000, -1.292492e+000, -1.351393e+000, 2.709116e+000, 6.297066e+000, 1.075834e+001, 5.199347e+000, -1.635738e+001, 5.106656e+000, -2.281914e+000, 1.398598e+000, -7.746222e+000, 8.834071e-001, -4.474367e+000, -1.709099e+001, 6.949795e-001, 6.060655e+000, 1.369174e+001, 1.209459e+001, 1.035689e+001, 2.264310e+001, -6.075155e+000, -5.758015e+000, -3.579739e+001, 3.282806e+001, -6.688816e+000, 5.258694e+000, 7.576096e+000, 1.310883e+001, -1.260425e+000, -7.824319e+000, -8.070195e+000,


© ISO/IEC 2004 — All rights reserved

--`,,```,,,,````-`-`,,`,,`,`,,`---

Copyright International Organization for Standardization
Provided by IHS under license with ISO
No reproduction or networking permitted without license from IHS
Not for Resale

3.717276e+000, 7.395491e+000, 1.730696e+001, 3.846231e+000, 7.433284e+000, 1.092328e+001, 4.592076e+000, -7.134246e+000, 3.470783e+000, 2.881710e+000, 3.450100e+000, 7.195326e+000},
{1.853660e+001, 1.343534e+000, 4.384743e+000, 7.615110e+000, -1.035950e+001, 7.481377e+000, -5.822166e+000, 4.773717e+000, -1.895833e+001, 6.093784e+000, -6.769443e+000, 3.442309e+000, -1.070234e+001, 4.238648e+000, -1.177416e+001, -4.391461e+000, 4.057998e+000, 1.338378e+000, 1.038249e+001, 1.298172e+001, -4.239400e+000, -4.064190e+000, 6.270808e+000, -4.550679e+000, -3.007226e-001, 4.116277e+000, 6.174095e+000, -4.208391e+000, -1.013042e+000, 3.941862e+000, -5.467285e+000, -6.274819e+000, -1.083563e+001, -5.236174e+000, 1.143075e+000, 8.382399e+000, 2.338462e+000, 1.538913e+000, 3.626196e+000, 3.936841e+000, 1.463812e+000, -8.193194e+000, -1.176086e+000, 4.783815e+000, 4.017729e-001, 5.603340e-001, 1.076392e+001, -4.721233e+000, 2.875024e+000, 1.118696e-001, 9.246864e+000, 3.449298e+000, 5.311954e+000, -6.217702e-001, -9.347104e+000, 3.444297e+000, 1.358994e+000, -8.178317e-001, -3.552371e+000, -1.237160e+000, 2.044228e+000, 2.339432e+000, 2.782179e-001, 3.268439e+000, 6.848800e-001, 2.981625e+000, -1.410739e-001, -4.374042e+000, -2.167039e+000, -5.250317e+000, -1.381779e+001, 1.843518e+000, 2.307962e+000, -1.971140e+000, 2.507906e+000, 1.867778e+001, 1.237285e+001, 1.827492e+001, 8.443913e+000, 7.751379e+000, 2.543752e+001, -8.608789e+000, -2.601090e+001, -2.568551e+001, -2.850996e+001, -7.807544e+000, 3.448327e+001, -4.441631e+001, -1.966912e-001, 2.924129e+001, -6.481554e+000, -2.180520e+001, -3.149780e+001, 3.647194e+000, -1.448510e+001, -9.524582e+000, 1.722033e+001, 6.931840e+000, 9.801473e+000, -1.004396e+001, 1.459688e-002, -2.663137e+000, 1.587708e-002, -1.366816e+001, 2.338457e+001, -1.644290e+001, -7.506859e+000, 7.972226e+000, 2.468656e-001, 1.456855e+001, 1.083959e+001, 1.435520e+001, -6.630616e+000, -4.393616e+000, 1.177030e+001, 3.613423e-001, -8.631562e+000, -1.102496e+001, -4.386639e-002, 1.549930e+000, 6.655018e-001, 3.371894e+000, -1.352803e+000, -3.410763e+000, 1.418927e+000, -2.944059e+000, 1.930805e+000, 3.772276e+000, 3.716418e+000, -6.158148e+000, 2.270847e+000, 8.754837e+000, -2.493920e+000, 5.511810e-001, -1.383697e+000, -5.265876e+000, 8.185695e+000, -4.615273e+000, -2.311349e+000, 9.349328e-001, 3.329395e+000, 2.421869e+000, 2.193893e-002, 5.990045e+000, -4.224788e+000, -2.607962e+000, 5.962592e-001, -7.207579e-001, -3.764695e-001, 1.920703e+000, -7.488162e+000, -3.443941e+000, 5.881567e+000, 8.800152e-001, -2.107207e+000, 7.930817e-001, 2.917522e+000, -2.863516e+000, 5.017827e+000, -6.441336e+000, -1.195409e+001, 2.590254e+001, 1.138216e+001, -3.634374e+000, 7.177623e+000, 1.113161e+001, -2.902882e+001, 8.144970e+000, 1.030293e+001, 1.705147e+000, 1.831542e+000, -3.197377e+001, 4.308716e+000, -1.914096e+001, -3.158193e+001, 6.070060e+000, 8.209178e+000, -1.737688e+001, -1.758460e+000, 1.326142e+001, -6.152098e+000, -2.099941e+001, 4.381115e+000, -5.809088e+000, -1.014952e+001, 1.189104e+001, -1.049314e+000, 9.020047e+000, 8.270665e-001, 1.478021e+001},
{-2.260375e+000, -4.980266e+000, -7.968283e-001, -6.306613e+000, 1.046958e+001, 5.970449e+000, 5.482867e+000, -4.267261e+000, -3.281475e-002, 3.703509e+000, 2.973461e-002, -6.903211e+000, -2.616061e+000, -1.000933e+001, 2.128568e+001, -2.280440e+001, -7.034440e+000, 1.264628e+001, 5.715802e+000, 5.728725e+000, -1.118104e+001, 9.108239e+000, 1.653576e+001, 1.737221e+000, 5.489405e+000, 6.581058e+000, 3.028012e+000, -6.253648e+000, 4.082367e-001, 9.549212e-002, 4.439667e+000, 1.097918e+000, -5.206765e+000, -2.634463e+000, -3.989220e+000, -2.337939e+000, -3.741206e+000, -1.630929e+000, -1.345211e+000, 9.836149e-001, 1.315643e+000, -3.107181e+000, -4.000887e+000, -1.197137e+000, -4.187492e+000, 5.330298e+000, -3.451965e+000, -3.369528e+000, -1.487783e+001, -6.202904e+000, -5.582058e+000, 7.937397e+000, 1.748289e+000, -8.037311e+000, 7.213742e+000, -8.535819e-001, 3.056480e+000, 1.191895e+001, 2.196554e+000, -4.915144e-001, -8.340686e+000, 1.148974e+000, 5.104640e-001, 6.704681e-001, 6.992213e+000, 1.217894e-002, -3.516434e+000, 3.955700e-001, -1.553501e+000, -3.089769e-001, 1.602049e+001, 1.444971e+001, 1.514038e+001, 5.631686e+000, -1.916856e+000, 1.832248e+000, 3.895401e+000, 1.653029e+001, -3.252318e+001, 1.316703e+000, 3.852187e-001, -2.443736e+000, 2.096798e+001, 1.810173e+001, 1.610818e+001, -6.323616e+000, 6.555445e+000, -2.218224e+001, 2.288038e+001, 3.484994e+001, 3.156881e+001, -3.343615e+001, 5.272211e+001, -1.720798e+001, -1.614291e+001, 1.341967e+000, -9.059446e+000, -1.599987e+001, -1.797965e+001, 1.444648e+000, -1.462873e+001, 1.867167e+001, -5.299949e+000, 1.692585e+001, 7.627847e+000, 2.927954e+000, 1.231194e+001, 6.720606e+000, 3.181356e-001, -1.593536e+001, -6.057451e+000, -1.070359e+001, 1.122701e+000, -6.437895e+000, 1.254177e+001, -1.151975e+000, 8.967954e-001, -2.193768e+000, -5.140941e+000, -6.862258e+000, -1.079959e-001, 9.158899e+000, -5.133824e-001, -4.458295e+000, -2.622274e+000, -3.395829e+000, 3.864155e+000, -5.485246e+000, 3.039125e+000, 1.090516e+001, 9.823763e-002, -1.163644e+001, 4.506760e+000, -2.655777e+000, 2.878444e+000, -1.365571e+000, 4.954287e-001, -6.913793e+000, 2.108382e+000, -2.248485e+000, -1.787050e+000, -4.516688e+000, 1.126769e+000, -3.403336e+000, -1.561035e+000, 7.056354e+000, -3.479544e+000, -8.871065e+000, -3.479886e+000, 6.518704e+000, -

© ISO/IEC 2004 — All rights reserved


--`,,```,,,,````-`-`,,`,,`,`,,`---

Copyright International Organization for Standardization
Provided by IHS under license with ISO
No reproduction or networking permitted without license from IHS
Not for Resale

1.205362e+001, -7.884104e+000, 9.965289e+000, -1.296038e+000, -3.738753e+000, -9.489000e+000, 8.597363e+000, -
6.979366e+000, 3.184770e+000, 8.954780e+000, 4.557903e+000, 2.175804e-001, -2.940039e+000, -2.231405e+001, 3.178608e+000,
-2.852228e+001, 8.624029e+000, -1.616615e+001, 2.698461e+001, 2.152151e+000, 3.572222e+001, -2.024109e+001,
2.378027e+001, -8.438519e+000, -2.699920e+000, 8.264033e+000, 9.602315e+000, 1.237193e+001, -1.322791e+001, -
2.949105e+001, 6.497215e-001, -1.887016e+000, -4.375515e+000, -1.319361e+001, 1.749384e+001, -1.771044e+001,
6.223067e+000, 2.336419e+000, -9.521923e+000, 1.528481e+000},
{9.762440e+000, -2.253731e+001, 1.526998e+001, -1.894482e+001, 1.446342e+001, -1.659955e+000, -1.921547e+001,
1.794555e+000, 1.780785e+001, 4.997397e-001, 1.728957e+001, 9.427903e+000, -1.109037e+001, -2.113647e+001, -2.665506e+001,
-1.273480e+001, 1.857129e+001, 1.399278e+001, -1.334171e+001, 1.310091e+001, -9.456584e+000, -8.196425e+000,
6.671580e+000, -2.154473e+000, 7.941471e+000, -7.604512e+000, -3.417990e+000, 7.771149e+000, 1.109510e+001, -
7.263395e+000, -3.822362e+000, -4.391526e+000, 3.172897e+000, 2.106987e-001, 4.049426e-002, 3.223613e+000, -4.378199e+000,
8.492672e+000, 4.451029e+000, -3.019364e+000, 5.282554e+000, -8.074722e+000, -7.234753e-001, -3.723487e+000,
7.450448e+000, 1.509700e+001, 1.373378e+000, -5.588408e-001, 1.169584e+001, -2.341326e+000, -8.424946e-001, -2.079383e+000,
-3.974713e+000, 1.308039e+001, 1.356500e+000, -7.354242e+000, 5.404673e+000, -8.621639e+000, 8.004295e+000,
4.938049e+000, -2.564706e+000, -7.215799e+000, 5.063095e+000, -9.425555e-001, 1.519983e+000, -5.826512e+000, 2.468990e-002,
2.441967e+000, 6.814920e+000, 8.362609e+000, -3.590101e+000, 1.209556e+001, 2.496585e+001, 6.148096e+000, 4.146984e+000,
1.343756e+001, -3.429252e+000, 5.218762e+000, -4.512500e+000, 1.232531e+000, 7.987144e+000, 2.191219e+001, 2.228283e+000,
-1.823223e+001, 8.110100e+000, -1.540374e+001, -3.681807e+001, 4.218339e+001, -1.906826e+001, -5.219333e+001, -
2.140041e+001, -3.430017e+000, 2.833742e+001, -2.309185e+001, -7.730840e+000, 1.629922e+001, 3.187552e+000,
1.479961e+001, 1.702224e-001, -3.313365e+001, 1.189725e+001, -2.749907e+001, -1.170982e+001, 7.731938e+000, 8.669941e+000,
1.000353e+001, -5.138920e+000, 3.005828e+000, 4.556362e+000, 1.263731e+001, -1.503495e+000, 1.768630e+000, -
2.103735e+001, 6.477296e+000, 2.042789e+000, -1.675613e+000, -4.811321e+000, -1.523159e+000, 1.910071e+000,
2.418124e+000, -4.825610e+000, -7.823318e+000, -1.922225e+001, -1.177020e+001, 2.487749e+000, -4.773273e+000,
2.473568e+000, -1.191359e+000, 1.584876e+000, -9.791723e+000, 1.314166e+000, -2.322595e+000, -1.090069e+000,
9.729406e+000, 1.016489e+001, -1.419276e+000, -7.696549e+000, -1.119015e+000, -4.430844e+000, -3.731996e+000, -
1.037559e+001, 3.385628e+000, -3.585851e-001, 8.619109e+000, 5.057232e+000, 1.789196e+000, 2.360426e+000, 1.822268e+000, -
1.901897e+000, 6.173535e+000, -8.097370e+000, 8.930041e+000, 4.660875e+000, -2.284746e+000, 8.696055e-001, -9.489359e+000,
2.050810e+001, 6.732873e+000, -1.319729e+001, -8.278151e+000, -2.239258e+001, -1.832693e+001, -4.167900e+000, -
1.152705e+000, -2.596965e+001, 3.276988e+000, -2.171595e+001, 4.568889e+000, 1.692027e+001, -2.661711e+000, -
1.520989e+001, -1.814034e+001, 1.791105e+000, -8.957746e+000, -1.023738e+001, 5.828675e+000, -1.118507e+001,
1.316393e+001, 1.256479e+001, -1.020734e+001, 3.953191e+000, -2.212823e+001, 5.283566e+000, 9.105019e+000, 9.234863e+000,
-1.259688e+001, -1.931536e+001, -8.948933e+000, 1.911246e+001, 1.844780e+000},
{-1.234639e+001, -7.803366e+000, -4.372218e+000, -8.146123e-001, -1.623912e+001, -2.134669e+001, -5.048476e+000,
1.266291e+001, 6.488261e+000, 1.086180e+000, 3.393980e+000, 8.689757e+000, 9.026591e+000, -1.545237e+001, 2.171762e+000,
2.808598e+001, 2.231088e+001, 8.670418e+000, -1.304414e+001, -1.412498e+000, -1.270771e+001, -2.855608e+000, -
2.001588e+001, -5.708168e+000, 1.248798e+001, 1.012664e+001, 1.408312e+001, -1.023979e+001, 1.296780e+001, 4.852338e+000,
2.289344e+000, 1.533613e+000, 1.442533e+001, 1.356160e+001, 1.408794e+000, -6.747542e+000, -3.761116e+000, -
6.879473e+000, -7.112093e+000, -3.554139e+000, -8.551583e-001, 2.194773e+000, 3.570585e+000, -6.629674e+000, 3.474102e-001,
4.978155e+000, 3.544629e+000, -3.152149e+000, -6.679505e+000, 6.902456e-001, 1.056637e+001, 5.193572e+000, -3.840938e+000,
-9.758362e+000, -3.878305e+000, -1.956992e-001, 3.858136e+000, -1.431007e+000, -3.907331e-001, -4.427097e+000, -
5.438407e+000, 2.107745e+000, 1.108851e+000, 4.379719e+000, -1.965580e+000, 4.079045e+000, -2.865035e+000, 1.107527e+000,
4.369329e+000, -1.211858e+001, -5.909083e-001, -1.527180e-001, -1.259135e+001, 6.862527e-001, -5.823668e+000, -
1.260938e+000, 1.088405e+001, -2.665410e+000, 1.141930e+001, -1.048795e+001, -2.072637e+001, -1.830997e+000,
2.841459e+000, 6.199577e+000, -6.561486e+000, -8.508419e+000, -3.023702e+001, -6.631140e+001, -3.955856e+001,
3.027397e+001, 2.227171e+001, -1.205986e+001, 1.772799e+001, 2.846609e+000, 2.024939e+001, 2.507520e+000, 3.693825e+001, -
6.091899e+000, 1.636902e+001, -2.253371e+001, 7.050721e+000, -1.041718e+001, 8.728792e+000, 1.182048e+001, 4.910026e+000,
-2.996188e+000, -6.486220e+000, 4.940316e+000, 6.119013e+000, 1.088985e+000, -8.588058e+000, -5.597636e+000,
1.863670e+000, 3.699872e+000, -9.588629e+000, 7.194765e+000, 7.032070e+000, 6.832180e+000, -1.181983e+000, 8.272356e+000,


© ISO/IEC 2004 — All rights reserved

Copyright International Organization for Standardization
Provided by IHS under license with ISO
No reproduction or networking permitted without license from IHS
Not for Resale

8.588367e+000, 3.291336e-001, -4.869022e+000, 7.754785e+000, 2.368055e+000, 1.052493e+000, 8.383850e+000, -3.014893e+000, -1.336812e+001, -6.498304e+000, -1.795657e+000, -6.490084e-001, 1.014436e+001, 6.237143e+000, -2.359919e+000, -4.364247e-001, 2.302605e+000, -4.560024e+000, -2.690329e+000, 3.335272e+000, 1.454870e+000, -3.205043e+000, 5.745683e+000, 8.086280e+000, 1.548329e+000, -1.011280e+000, 7.964549e+000, 1.088835e+001, 4.167811e+000, -3.528885e+000, 1.297947e+001, 6.444922e+000, -6.073609e+000, 5.197539e-001, 2.249696e+001, 6.560265e+000, 3.656355e+000, 2.771727e+000, 5.007813e-001, -2.705419e+000, -7.128613e+000, 7.271657e+000, 1.328381e+001, 1.724944e+001, -4.863233e+000, -1.142913e+001, 1.057161e+001, 8.173800e+000, -1.001820e+001, -3.014398e+001, -2.219070e+001, 9.377142e+000, -1.157176e+001, -4.204256e+000, -1.159317e+001, 1.437555e+001, 1.494727e+001, -9.794741e-001, 9.477354e+000, 1.032673e+000, 7.395155e+000, -1.230578e+001, -9.622887e+000, -1.320335e+001, 9.950048e+000, 4.010127e+000, -7.164002e+000, 1.451073e+000, -4.022934e+000, 1.750681e+001},
{1.462582e+001, 2.191055e+000, 7.482522e-001, -1.382934e+001, -9.452575e+000, -3.748386e+000, 1.306616e+001, -1.054259e+001, 5.358179e-001, -6.808083e+000, -4.913897e+000, 1.012399e+000, 2.959812e+001, 2.081123e+001, 2.311758e+001, -7.532025e-002, 2.247092e+000, 8.215628e-001, -7.329683e+000, 6.918251e-001, -9.901484e+000, 2.526327e+001, -7.596298e+000, 4.791024e+000, 3.639203e+000, -6.923576e+000, 6.200642e-001, 1.156572e+001, 5.694240e+000, -8.330548e+000, 4.119587e+000, 5.931842e+000, -1.071530e+000, -1.207732e+001, 9.292484e+000, 1.345964e-001, -2.061035e+000, -4.542687e+000, 8.419830e+000, 1.787300e+000, -5.122304e-001, -4.245643e+000, -5.752515e+000, -6.170927e+000, -2.391804e+000, -4.162685e+000, 7.446788e+000, 6.198052e+000, 8.169698e+000, -1.066353e+001, -2.436829e+000, -4.595663e+000, 5.529506e+000, 8.718557e+000, 6.522189e+000, -3.868169e+000, -1.147453e+000, -1.567211e+000, 3.091807e+000, -1.477069e+000, -3.309233e+000, -3.187146e+000, -4.812530e+000, 1.527874e+000, -3.474337e+000, 4.733835e+000, 2.236716e+000, 5.460794e+000, -1.795007e+000, -1.989964e-001, 2.960010e+000, 1.914031e+001, 7.515156e+000, 1.027984e+001, 1.592653e+001, -6.457924e+000, 1.801460e+000, 1.485762e+001, -5.033902e+000, 1.981622e+001, -1.966083e+001, 1.367162e+000, 5.528005e+000, -1.842336e+001, 2.268411e+001, -4.910475e+000, -2.576132e+001, 1.630992e+001, -2.020617e+001, 2.809162e+000, -1.834713e+001, -2.843454e+001, -4.058695e+000, 4.600942e-001, -3.420781e+001, -4.509419e+000, 1.278526e+001, 1.199992e+001, -1.045567e+001, 5.490949e+000, -1.646443e+001, -6.980037e+000, 9.337971e+000, -2.455702e+001, -8.959427e+000, 2.208921e+001, 1.331586e+001, 1.610976e+001, -1.727973e+001, -6.162033e+000, -7.833964e+000, -9.342579e+000, 6.509428e+000, -1.883398e+000, -2.294657e+000, -7.100641e+000, -7.017793e+000, 1.588054e+001, -7.608743e+000, -5.475464e+000, -1.782851e+000, -2.182752e+001, -2.815235e+000, 6.298533e-001, 2.796017e+000, -7.763597e+000, -1.971500e+000, 2.246760e-001, -1.624324e+000, -1.403778e-001, -1.389789e+001, -7.567745e-001, -1.546079e+001, -9.238267e-001, -1.647142e+000, -8.589259e+000, 5.861732e+000, -9.937512e-001, 1.760158e+000, 7.530181e+000, 5.597606e+000, 7.878146e+000, 7.331568e+000, -2.174068e+000, 5.028957e+000, -1.035721e+001, -5.833004e+000, 1.339617e+001, -4.963373e+000, -3.122207e+000, -1.906887e+001, -1.888506e+001, 1.781047e+000, -2.961109e+000, -3.169418e+000, 3.976640e+000, -5.128105e+000, -6.310372e+000, 1.797824e+000, -7.135120e+000, 7.246794e+000, 2.227390e+001, -1.053643e+001, 3.564280e+001, 7.072242e+000, -1.466288e+001, 7.151910e+000, 2.104859e+001, -1.847316e-001, 1.286413e+001, -1.515148e+001, -1.153370e+001, -2.668609e+001, -4.145722e+000, 1.220474e+001, 1.569162e+000, 1.253693e+001, -1.115542e+001, 1.170744e+001, -8.466471e+000, -5.498286e+000, -3.526448e+000, 3.581539e+000, -1.458912e+001, -4.499975e+000, 5.765844e+000, -2.028570e+001, -4.117944e+000, -1.157812e+001, 2.607571e+000},
{-4.392831e+000, -1.041112e+001, 3.349000e+000, -3.580070e+000, 8.400003e+000, 1.641124e+000, 4.764644e+000, 1.473581e+001, 1.441308e+001, -1.722307e+001, -2.303465e+001, 1.413024e+000, -6.083187e+000, 1.631716e+001, -2.499087e+001, 5.933778e-001, 1.076182e+001, 8.417350e+000, 4.198718e+000, -5.547111e+000, 3.160127e+001, 1.813947e+000, 4.296818e+001, 5.654764e+000, -5.750577e-001, 7.120340e+000, -9.659134e+000, 1.784521e+001, 1.540942e+000, -1.049479e+001, 4.312055e+000, -4.587310e-001, 1.880359e+001, 7.572376e+000, -1.605187e+001, 9.398467e-001, 7.285736e+000, 6.844089e+000, 1.622532e+001, -4.730674e+000, -1.912664e+000, -2.909881e+000, 9.856709e+000, -1.641108e+000, 9.540065e+000, -1.183940e+001, 1.477496e+000, -2.466002e+000, -4.403247e+000, -4.051341e+000, 5.297672e+000, 6.206672e+000, 4.261927e-001, 6.194157e+000, -6.804152e+000, 8.701778e+000, -5.720211e+000, -4.241793e+000, 5.032997e+000, -3.418832e+000, -2.068354e+000, 9.042877e+000, -2.196950e+000, -4.149837e+000, 5.026584e+000, -8.733572e+000, 9.038773e+000, 3.383799e+000, -3.070741e+000, -2.311021e+000, -1.626348e+000, -7.842670e+000, 5.734107e+000, 1.177206e-001, -4.890168e+000, -1.196217e+001, 8.124125e+000, -1.289803e+001, 4.751435e-001, 3.746614e+000, 6.724309e-001, -3.438377e+000,

© ISO/IEC 2004 — All rights reserved


Copyright International Organization for Standardization
Provided by IHS under license with ISO
No reproduction or networking permitted without license from IHS
Not for Resale

1.410425e+000, 1.788850e+001, 7.145429e+000, 2.075316e+001, 1.307623e+001, -2.634533e+001, -1.706476e+001, -1.043409e+000, 1.862767e+001, 4.520231e-001, -2.815770e+001, -5.135187e+001, -1.215310e+001, 4.927580e+001, -2.346832e+001, 3.759095e+000, -3.295747e+000, 7.619243e+000, -5.556029e+000, -2.475044e+001, -3.004193e+000, 8.235063e+000, -9.043517e+000, 3.662921e+000, 1.022723e+001, -9.807738e+000, 4.916616e+000, -5.474318e+000, 1.687689e+001, -1.351171e+001, 1.575328e+001, -2.513290e+000, -1.150605e+001, -5.579505e-001, -3.846242e+000, 6.867284e+000, 6.756344e+000, 7.466398e+000, 1.520831e+000, -2.779380e+000, 6.469078e+000, 7.368425e+000, 1.730921e-002, 1.126189e+001, 9.768091e+000, 8.236655e+000, -8.830269e+000, 1.046054e+000, 3.989322e+000, 1.191064e+001, 9.396228e-001, -8.457652e-001, 3.666437e+000, 7.542598e+000, 4.429991e+000, -2.561220e+000, -1.022886e+001, -3.257666e+000, -2.692065e-001, -3.799857e+000, 9.258658e+000, -5.302771e+000, 1.347727e+000, -1.773065e-001, 4.190948e+000, 4.576161e+000, -1.642963e+000, -6.756228e-001, 5.211198e+000, 1.537598e+001, -3.539279e+000, 2.778309e+000, -5.079417e+000, 5.283637e+000, 3.915986e-001, 1.670105e+001, 1.095712e+001, 5.159121e+000, 2.966068e+000, -1.424138e+001, -2.704300e+000, -1.347382e+001, 3.450951e+000, 4.174939e+000, -2.211549e+000, 2.012560e+001, -6.881176e+000, 4.107731e+000, 8.194067e+000, 8.742365e+000, -4.726863e+001, -9.526389e-002, -1.206429e+001, -1.640167e+001, 1.046881e+001, 1.262984e+001, 1.186903e+001, 1.208991e+001, -2.273019e+000, 5.998850e+000, -2.105894e+001, 6.867380e+000, -2.840043e+000, -2.549088e+001, -2.705659e+000, -2.641419e+000, -5.953984e-001, -8.990175e+000},
{-3.050819e+000, -2.394800e+001, 4.660058e+000, 7.050409e+000, 5.063995e+000, -3.772585e+000, -9.253661e+000, -1.593619e+001, 1.105698e+001, 1.892978e+000, 2.139226e+001, -4.260280e+000, -1.952795e+000, -1.306389e+001, -4.657578e-001, -1.034815e+001, 8.492573e+000, 1.217624e+001, 3.981360e+000, 2.052718e+001, 2.203350e+001, -1.296866e+001, 4.479390e+000, 2.994989e+001, 8.186534e+000, 1.933246e-001, -5.903994e+000, -6.441048e+000, 6.087603e+000, 4.496188e+000, -2.665100e+000, -9.607216e+000, 2.980622e+000, 4.246528e+000, -1.151319e+001, -1.460137e+001, -1.207812e+000, 3.310039e+000, -4.743475e+000, -1.174255e+001, 2.177970e+000, 7.188684e+000, 1.574021e+001, -1.727457e+001, 1.161833e+001, 3.645598e+000, -3.311231e+000, -3.796075e+000, -2.771518e+000, 4.486975e+000, -3.041241e+000, 6.140890e+000, -1.406766e+000, 2.895947e+000, -7.767067e+000, 4.188318e+000, 4.540296e+000, -1.124502e-001, -2.567637e+000, 2.056650e+000, -4.533325e+000, -5.660711e-001, 9.382421e+000, -4.563011e+000, -5.347688e+000, 4.246400e+000, 4.112075e+000, -2.935344e+000, 2.171393e+000, 2.371197e+000, -7.981052e+000, 8.560615e+000, 4.994864e+000, -1.713282e+001, 1.087901e+001, -2.485351e+001, 1.562457e+000, -1.195459e+001, -1.834407e+000, 1.344791e+001, 5.389163e+000, 5.777144e+000, -1.162729e+001, -6.309842e+000, 6.225614e+000, -1.323767e+001, -3.838550e+000, -1.342812e+001, 3.611122e+001, 1.439473e+001, -3.661020e+001, 4.345633e+001, 1.148332e+001, -1.143741e+001, -2.574292e+001, -7.236455e+000, 6.855618e+000, -4.594020e+001, -2.150248e+001, 3.839842e+000, 3.674113e+001, -3.197336e+001, -2.412053e+001, 3.312123e+001, 1.358512e+001, 1.641023e+001, 1.714083e+000, -2.357654e+000, 5.367432e+000, -1.371176e+001, -1.096488e+001, -1.591768e+001, 8.929885e-001, 1.522734e+001, -8.737707e+000, -5.413920e+000, 2.084275e+000, -1.946206e+000, -3.477969e+000, 8.549873e+000, -8.931767e+000, -1.634190e+000, -1.367595e+001, -2.396907e+000, 2.541565e+000, 7.577110e+000, -3.333666e+000, 1.282276e+001, 5.500845e+000, 3.934450e+000, -6.067563e-001, -8.152183e+000, 1.246738e+001, 8.193457e+000, -3.013044e+000, 4.622070e-001, -9.609318e+000, 1.227476e+001, -3.187820e+000, 8.023548e+000, -2.302347e+000, -6.330591e+000, -1.606176e+000, 6.938278e+000, -7.303442e-001, -5.200075e+000, 2.510717e+000, 1.138550e+001, -1.572793e+000, -6.578152e+000, 9.404696e+000, 1.443025e+001, -2.683909e+000, -2.466314e+000, 2.494117e-001, 1.116412e+000, 9.330408e+000, 1.144986e+001, 1.421802e+001, -1.127482e+001, -3.169366e+000, 1.095910e+001, -1.858438e+001, 4.540298e+000, 9.983037e+000, -1.659857e+001, 7.201182e+000, -7.080714e-002, -3.025717e-001, 3.136148e+001, 6.256814e+000, 2.181732e+001, 1.050623e+001, 1.547222e+001, -8.033920e+000, 2.468095e+001, 2.581952e+001, -7.983840e+000, -1.540062e+001, 8.158838e+000, 1.272770e+001, 6.011633e+000, 1.301958e+001, 4.424133e+000, 1.376307e+001, 3.681145e-001, 1.905356e+000, -6.108123e+000, 2.122914e+001, 1.243455e+001},
{1.064961e+001, 4.507728e+000, -1.498195e+001, 1.937885e+001, 2.050725e+000, -1.268058e+001, -9.828344e+000, 2.125097e+001, -2.497263e+001, 2.192862e+001, 1.103308e+001, -2.655655e+001, -7.199480e-002, 1.007289e+001, -1.165402e+001, -1.035463e+001, -1.171527e+001, -1.719273e+001, 1.804222e+001, 1.433748e+001, 1.964494e+001, -1.135454e+001, -1.411539e+001, 1.901183e+001, -1.032216e+000, -9.722623e-003, -1.830928e-001, 9.246122e+000, -1.015033e+001, 7.784622e+000, -2.124930e+000, -1.483168e+001, 4.125813e+000, 1.360709e+001, 1.191193e+001, 7.201919e+000, -8.747656e+000, 8.862908e+000, 1.222190e+000, -1.166648e+000, -9.717090e+000, 9.673815e-001, -1.594952e+001, -2.233110e-001, 1.305739e+000, -1.326125e+000, -8.162264e+000, 1.142792e+000, -6.240025e+000, 3.178275e+000, 9.160028e-001,


--`,,```,,,,````-`-`,,`,,`,`,,`---
© ISO/IEC 2004 — All rights reserved

Copyright International Organization for Standardization
Provided by IHS under license with ISO
No reproduction or networking permitted without license from IHS
Not for Resale

1.244420e+001, -2.244827e+000, 2.632206e+000, -1.675327e+000, -6.736639e+000, -7.585972e+000, -7.143094e+000,
1.046875e+000, -1.414258e+000, -3.530773e+000, -6.312716e-001, 8.500714e+000, -8.485025e+000, 3.789869e+000,
3.155949e+000, -2.884736e+000, 1.638849e+000, 1.045315e+001, -4.595919e+000, -1.896585e+001, -1.316193e+001, -
2.811189e+001, -1.498638e+001, -3.563256e+000, 1.406985e+001, 2.437951e+001, 7.216866e+000, 1.363017e+001, -
3.941579e+000, 3.392851e+000, -1.980870e+001, 3.139268e+000, -3.457839e+001, -1.057719e+001, 2.584952e+000, -
4.314432e+001, 5.822321e+000, -2.667558e+001, 7.898576e+000, -6.052556e+000, -3.310171e+001, 2.863885e+001,
1.661394e+001, -8.237270e+000, 5.317347e+001, 1.319734e+001, -8.893551e+000, 1.211977e+001, 3.766229e+001, -
8.643163e+000, 1.405201e+001, -1.761142e+000, -5.734452e+000, 1.205417e+000, -1.734219e+001, -4.918218e+000,
7.704511e+000, 1.565443e+001, -1.155305e+001, -1.975875e+000, -5.168359e-001, 5.999714e+000, -1.120828e+001, -
3.706533e+000, 6.686533e+000, 2.736896e+000, -1.090137e+001, -7.778925e+000, 1.832110e+001, 5.936071e+000, 2.576839e+001,
3.010223e+000, 7.928399e+000, 6.839618e+000, 2.487323e+000, -1.928436e+000, 4.864619e+000, 6.398156e+000, -1.179503e+000,
-1.031489e+000, 1.733021e-001, 8.438699e+000, 4.535118e+000, -7.586167e+000, 1.759163e-001, 1.204458e+000, 1.024340e+001, -
5.294340e+000, 7.154455e+000, 1.029075e+000, 2.098100e+000, -9.418498e+000, -3.265140e+000, -5.506801e+000,
6.364896e+000, -9.201116e+000, -3.331343e+000, 2.220168e+000, -4.565889e+000, 5.428185e+000, 6.100825e+000, -8.207744e-
001, -8.615786e+000, 6.991650e+000, -1.252713e+001, -4.051553e-001, 6.824753e-002, 1.282872e+001, 7.120900e+000, 1.130170e-
002, 1.043014e+001, 4.339290e+000, 8.411379e+000, -2.323259e+001, 4.415747e+000, 8.813066e+000, 1.029781e+001,
9.028224e+000, 1.148182e+001, 1.329032e+001, 2.963721e+000, 2.347495e+001, -1.186274e+001, 3.290693e+001, -1.904920e+001,
7.753862e+000, -1.581740e+000, 2.290273e+001, -1.583199e+001, -4.134185e+000, 1.560630e+001, -1.624536e+000,
8.307421e+000, 1.014047e+001, -4.968953e+000, 6.190798e+000, 8.706603e+000, -1.377394e+001, 1.293467e+001},
{-9.633226e+000, -3.271602e+001, 2.214235e+000, -5.007807e+000, -1.508064e+001, -2.874977e-001, -7.291962e+000,
1.938803e+000, -3.804891e+000, 2.115240e+000, 1.414871e+000, 6.592777e+000, 7.992006e+000, -8.143588e+000, -4.334918e-001,
-2.930737e+001, -1.055457e+001, 1.959610e+000, 6.926536e-001, -1.488577e+001, 2.360640e+001, 4.067288e+000, 1.220249e+001,
1.002290e+001, 1.092181e+001, -9.859203e+000, 2.039143e+000, -3.565466e+000, 1.614330e+000, 1.398007e+001, 2.613114e+000,
-8.647852e+000, 6.697411e+000, 1.340305e+000, 3.005808e+001, 4.510039e+000, 3.847495e+000, -4.434185e+000, -
1.955811e+001, -6.600379e+000, -3.472606e+000, -1.030383e+001, -1.038432e+001, 6.472642e-001, 1.326196e+001,
5.260469e+000, 2.097147e+000, -1.535246e+000, 2.132017e-001, -5.255368e-001, 5.426722e-001, -8.033391e+000, 7.036784e+000,
1.125966e+001, -3.481350e+000, -4.319125e+000, 2.405966e+000, -2.085762e+000, 8.805373e-001, 1.009831e+001, 6.816732e+000,
4.450482e-001, -9.568628e+000, -9.594908e+000, -2.140498e+000, -4.254137e+000, 1.830270e+000, 3.878100e+000,
7.258497e+000, 2.379160e+000, -3.932353e+000, 2.080236e+001, -2.004780e+001, 1.119024e+001, 2.991884e+001, -
4.463871e+000, -1.659047e+000, -1.176043e+001, -9.809683e+000, 2.214871e+000, 6.162241e+000, -4.963633e+000, 3.467782e-
001, 1.912472e+001, -4.382883e+000, -2.316074e+001, -2.441204e+001, 3.974758e+001, 7.789521e+000, 1.570286e+001,
1.142423e+001, -2.116275e+001, -1.505272e+001, 8.309360e+000, 8.113582e+000, 2.643625e+000, 4.523470e+001, -
1.303537e+001, 1.200386e+001, 2.724979e+000, 2.883930e+001, -1.120402e+001, 2.452156e+001, -1.420454e+001, 5.083173e+000,
2.056202e+001, 2.707657e+001, -2.110310e+001, 9.495521e+000, -1.150039e+001, -1.559149e+001, -6.061084e+000,
1.468767e+001, -8.988540e+000, 2.817870e+001, -1.215801e+001, -1.279515e+001, -1.327800e+001, 2.353143e+001,
1.198946e+001, -3.208710e+000, -1.319342e+001, -3.163775e+000, -1.024868e+001, -8.265528e+000, 6.846537e+000, 6.775205e-
001, -3.538277e+000, -3.885921e+000, 7.834223e+000, -2.689334e+000, 1.140866e+001, -1.452459e+001, -3.319241e+000, -
7.939037e+000, 6.976324e+000, -1.290004e+001, -6.744618e+000, -9.355248e+000, -1.666145e+000, -1.515186e+000, -
1.147758e+000, -9.491996e+000, -3.919925e+000, -1.332293e+000, -1.089248e+000, 6.946035e+000, -2.339726e+000,
2.984890e+000, -1.287658e+000, 1.267032e+001, 6.978716e+000, -1.988856e+001, 2.575367e+000, -5.349035e+000,
8.004067e+000, 1.057756e+001, 1.175452e+001, -1.042641e+000, 7.083636e+000, 6.803726e+000, -7.281367e+000, 5.577471e+000,
-1.572622e+001, -1.044264e+001, 2.802713e+000, 1.655694e+001, -8.241282e+000, -8.658791e-001, -2.420168e+000,
1.773757e+001, -6.073613e+000, -7.073631e+000, -4.295152e+001, 1.378607e+001, 3.283980e+001, 1.330290e+001, -
4.364974e+001, -5.352122e-001, 2.108720e+001, -2.091388e+001, 3.224584e+000, -1.518999e+001, -2.539587e+000, -
4.523725e+000, 1.090728e+001, -1.490479e+001, 1.515685e+000, 7.633663e+000, 5.931699e+000},
{-1.086100e+001, -7.560667e-001, -2.236992e-001, 1.341286e+001, 2.059634e+000, 6.130910e+000, -1.064813e+001,
1.306453e+001, -9.075255e+000, -2.078441e-001, -8.039619e+000, 2.316586e+001, -1.418879e+001, 5.214206e+000,
5.440610e+000, -1.578697e+001, 1.382871e+001, 1.586664e+000, 3.812740e+000, -1.838220e+001, -1.413590e+000, -

© ISO/IEC 2004 — All rights reserved


Copyright International Organization for Standardization
Provided by IHS under license with ISO
No reproduction or networking permitted without license from IHS
Not for Resale

3.550743e+000, -5.980388e+000, 1.105910e+001, 1.099847e+001, 2.507875e+000, 5.260751e+000, 1.018447e+000, 1.667079e-001, 1.004599e+001, 1.125244e+001, -1.862115e+000, 5.724622e+000, 7.059480e+000, 4.812428e-001, 6.140044e+000, 1.163659e+001, 7.122179e+000, 7.687874e+000, -5.132905e+000, 1.894255e+000, 5.760304e+000, -2.489377e+000, 4.167535e-002, -5.639306e+000, -6.824160e+000, -5.731547e-001, -7.448741e+000, 2.588043e+000, -7.704866e+000, -8.122442e-001, 4.915002e+000, 9.968349e+000, 3.788778e+000, -2.813465e+000, 1.107565e+001, -1.697152e+000, -2.654608e+000, 2.459238e-002, -2.078605e+000, -1.453223e+000, 7.363810e+000, -2.383672e+000, 3.058792e+000, 3.910488e+000, -2.282733e+000, 2.678529e+000, 1.399614e+000, 5.052321e+000, 1.516555e+000, 1.963188e+000, -1.198488e+001, -3.676051e+000, -7.135700e+000, 4.776177e+000, -5.905675e+000, 5.495710e-001, 1.250390e+001, -4.228687e+000, 1.178651e+001, -7.425753e-001, 6.971317e+000, 1.840232e+001, -1.523578e+001, 5.583836e+000, 2.277918e+001, -2.994533e+000, -2.598729e+001, -2.804546e+001, -3.542459e+001, 1.109038e+001, -3.054086e+001, -1.285029e+001, 2.877787e+001, -3.283329e+000, -9.893483e-001, 2.837382e+001, -4.706294e+001, -1.835665e+000, 6.115376e+000, -1.264895e+001, -3.282603e+001, -2.796842e+001, 9.996606e+000, -3.628056e+001, 1.433910e+000, 1.996690e-001, -6.898408e-001, -2.439378e+001, -1.606919e+001, 2.583551e+000, 1.110291e+001, -1.447017e+001, 3.196433e+000, 4.953016e+000, -6.127096e+000, -5.515743e+000, -5.534712e-001, 7.135619e+000, -2.959221e+000, -1.355717e+001, 2.285471e+000, -4.602960e+000, -1.794271e+001, 4.981648e+000, -4.180930e+000, 6.267636e+000, -8.643260e+000, 1.145262e+001, 8.627562e+000, 8.241821e+000, 7.648789e+000, -1.642127e+001, -8.343812e-001, -1.100632e+000, 1.267160e+001, -3.855701e-001, -4.574824e-001, 5.028848e+000, -1.326505e+001, -5.454905e+000, -1.252672e+001, -9.521590e+000, 4.809549e-001, -2.422989e+000, 2.064505e+000, 1.707184e+000, 2.774710e+000, -5.263314e+000, 8.026367e+000, 9.170644e+000, 9.259165e+000, 1.718840e+000, 1.615771e+000, -9.522350e+000, 3.815985e+000, -8.046294e-001, 4.372900e+000, 1.128869e+001, 1.016797e+001, 3.470396e-001, -1.406246e+001, -2.691094e+001, -1.273515e+001, -2.616375e+000, -4.962796e+000, -3.972706e+000, -2.038557e+001, 7.438437e+000, 1.352826e+001, 1.459437e+001, -7.065110e+000, 1.731903e+001, 2.411550e+001, -1.022783e+001, -7.177066e+000, 5.292003e+000, 7.226386e+000, 4.640876e+001, 2.417307e+001, -2.188105e+001, -1.792360e+001, -2.794050e+001, 1.187011e+001, -3.665992e+000, 1.621816e+001, -1.363180e+001, -7.245770e+000, 2.515815e+000, -9.816091e+000},
{2.941497e+001, 2.120094e+000, 2.468588e+000, 1.001380e+001, -1.987303e+001, -9.666132e+000, 3.328252e+000, -1.173796e+000, 5.908692e+000, 3.824760e-001, -2.006165e-001, -6.250811e+000, -5.952425e+000, -3.579630e-001, 3.847814e+000, 6.268779e+000, -8.346939e-002, 1.207024e+001, 1.953974e+001, -4.717608e+000, 2.819061e+000, 1.007955e+001, -2.720502e+001, 3.482432e+000, 1.516704e+001, 2.229387e+001, -2.185653e+000, 3.460194e+000, -4.368066e+001, 1.853659e+000, 8.522363e+000, -1.673429e+001, 1.761449e+001, 2.244611e+000, 3.740546e+000, 6.766188e+000, -1.208577e+001, 2.708785e+001, -8.546894e+000, -1.942239e+000, 1.676168e+000, -4.140807e+000, 1.894379e+000, 3.163272e+000, -1.332821e+001, -2.420278e-001, -1.531567e+001, -1.966627e+000, -9.373623e+000, -7.489637e+000, 6.401932e+000, 1.115533e+000, 1.517037e+000, -2.571370e+000, 1.221308e+001, 2.768066e+000, 1.340337e+001, 2.590442e+000, -3.817774e-001, -7.562444e+000, -4.279518e-001, 4.931729e+000, 2.869218e+000, -2.210954e+000, -6.413002e-001, 5.542271e+000, 1.373462e+000, -1.060970e+001, 4.049144e+000, -2.579167e+000, -3.813640e+001, 9.157365e+000, -3.667743e+000, -6.915986e+000, 6.069025e+000, 1.996355e+001, 5.941394e+000, -1.335301e+001, -1.513954e+001, 2.535907e+000, 1.644166e+001, -3.414622e+001, -3.138553e+000, 2.125795e+000, 2.453451e+001, -9.961556e+000, 9.958716e+000, -1.460632e+001, 4.214899e+000, -1.900027e+001, 1.446383e+001, 5.327701e+001, -6.421655e+000, 8.349817e+000, 1.799903e+001, 3.060639e+001, -2.562151e+001, -4.417524e-001, 2.832972e+001, 5.335977e-001, -2.238158e+001, -4.424218e+000, -1.938377e+001, -1.866985e+001, -1.113996e+001, 2.321150e+001, 2.501705e+001, 1.908734e+001, 1.706503e+001, 5.904545e-001, -2.183418e+001, -1.493993e+001, -2.067920e+001, -1.371571e+001, 1.597784e+001, -1.262450e+001, 6.603118e+000, 9.363309e+000, -2.046934e+001, -8.450041e+000, -3.729118e-001, 4.990292e+000, -1.631613e+001, -4.376219e+000, -4.246981e+000, -5.036173e+000, -2.488577e+000, 6.850348e-001, -4.240758e+000, 1.197108e+001, 1.372164e+000, 7.577136e+000, 2.192987e+001, 5.536282e+000, -5.546472e+000, -6.559645e+000, 1.288759e+001, -2.233216e+000, -6.958451e+000, 1.853062e+000, 9.411184e+000, 1.244215e+001, -2.218010e+000, -1.370666e+001, 6.189864e+000, 7.707428e+000, -4.826624e-001, 1.516736e+000, -8.646094e+000, -6.447731e+000, 2.246484e+000, -9.421696e+000, 5.460348e+000, 5.387895e+000, 1.437189e+001, 3.331880e+000, 4.164464e+000, -1.204067e+001, 5.887533e+000, -4.567000e+000, 7.354181e+000, -1.210573e+000, 1.675519e+001, 7.363746e+000, -1.004804e+001, -2.074664e+001, 1.890551e+001, 1.981813e+000, -1.446531e+000, 8.942606e+000, -5.133777e-001, -3.301052e+001, -1.525070e+000, -7.964420e+000, -1.516706e+001, 2.020193e+001, -3.183826e+001, 3.498272e+001, 2.243429e+001, 1.654240e+001, -


© ISO/IEC 2004 — All rights reserved

Copyright International Organization for Standardization
Provided by IHS under license with ISO
No reproduction or networking permitted without license from IHS
Not for Resale

3.804842e+000, -9.947663e+000, 1.399483e+001, 3.230916e+001, -2.783603e+000, -6.143275e+000, 2.022744e+001, -1.379978e+001, 6.984123e+000, -4.686990e+000},
{2.350619e+000, -2.357336e+001, -1.466625e+001, 6.803426e+000, -4.708089e+000, 2.820994e+000, -1.301445e+001, -2.161354e+000, -2.903234e+000, -4.666271e+000, 1.582218e+001, 3.742626e+000, -1.163717e+001, 2.274649e+001, 5.203317e+000, -7.004202e+000, 8.473200e+000, -4.105159e-001, 4.169075e+000, 1.274563e+001, -7.717020e+000, -6.387416e+000, -2.077200e+001, -2.693626e+000, -4.664768e+000, 1.376991e+001, 2.053183e+001, 4.347418e+000, -1.231868e+001, 4.141458e+000, -1.056035e+001, -2.129503e+001, 1.418369e+001, 1.510412e+001, 2.430642e+001, -1.496996e+001, -2.227148e+000, 2.319440e+001, -1.255155e+001, 3.212289e+000, -7.010590e+000, 2.888711e+000, -2.145085e+001, 7.945924e+000, -2.635995e+000, -3.488172e+000, -3.776996e+000, -1.284261e+001, -1.191666e+001, 1.615702e+000, -6.927332e+000, 1.049180e+001, 3.163894e+000, 6.126109e+000, -7.308730e+000, -9.199086e+000, 4.208845e+000, -1.411090e+001, 7.024243e+000, -1.331982e+000, -5.951943e+000, 6.648525e+000, -1.407842e+000, -1.518535e+000, 1.380198e+001, -2.278476e+000, 7.897815e+000, -1.126220e+001, -1.544482e+000, 1.426830e+001, -1.067643e+001, 1.394021e+001, -7.228512e+000, 1.361558e+001, 1.004661e+001, -6.187382e+000, -1.038137e+001, 1.325433e+001, -6.295396e+000, 6.428308e+000, 5.021797e+000, -5.088015e+000, -1.029395e+001, -1.088963e+001, -8.549470e+000, 1.145423e+001, -8.625320e+000, -2.884848e+000, -9.737857e+000, -1.759480e+001, 2.178340e+000, -2.851471e+001, 6.086867e+000, 8.632228e-001, 2.063236e+001, -1.913761e+001, -2.047772e+001, -3.805499e+001, -6.483686e+001, 1.075297e+001, 3.373068e+001, -1.119576e+000, 1.062761e+001, -3.820964e+001, 1.895743e+000, -5.130080e+000, 1.261657e+001, -1.579035e+001, 5.099812e+001, 1.532800e+001, 8.402117e+000, 1.368958e+001, -2.741140e+001, -1.064771e+001, 7.480412e+000, 1.587752e+000, -1.552549e+000, 5.071359e+000, -9.383170e+000, -3.503867e+000, 2.602963e-001, -3.579483e+000, 4.613711e-001, -1.105085e+001, -3.882897e+000, 4.960513e+000, 1.064632e+000, -1.191220e+001, -6.787248e+000, -1.635037e+001, 6.860739e+000, 1.170252e+001, 1.176656e+001, 1.992136e+000, 7.806719e+000, 7.630476e+000, 2.595934e+000, -5.288989e+000, -1.279362e+001, 5.251803e+000, -1.076396e+001, 2.149856e+000, 2.988318e-001, -1.761692e-001, 7.905770e-001, 2.517525e+000, -9.939176e+000, 6.161628e-001, -8.394836e+000, -4.382604e+000, 5.632801e+000, 7.174456e+000, 1.051111e+001, 9.278286e+000, -6.576214e+000, 7.561129e+000, 3.363114e+000, 8.142355e-001, 9.505732e+000, -1.258405e+000, -8.272852e+000, 1.808747e+001, 3.008751e+000, -1.851947e+001, -8.613587e+000, -1.406413e+001, 9.470373e+000, 6.418055e+000, 1.545990e+001, 2.026731e+000, 1.509048e-001, 1.725309e+001, -3.068886e+001, 6.250129e+000, -4.227296e+000, 1.006856e+000, -5.041528e+001, -1.637062e+001, 6.192726e+000, -2.493019e+001, -5.550773e+000, -3.572847e+000, -4.879122e+000, -1.460066e+001, 1.569342e+001, 1.568833e+001, 4.768952e+000, 1.418033e+001, 1.101265e+001, 3.575723e+000},
{-1.075890e+001, 2.631973e+000, 1.312732e-001, 1.616278e+001, -3.782251e+000, 6.328311e+000, 1.469093e-001, 3.122026e+001, -5.149074e+000, -1.193444e+000, 1.996416e+001, -1.946890e+000, -3.389431e+000, 1.347123e+001, 1.366182e+001, -1.748631e+001, -2.022712e+001, -1.127186e+001, 1.564820e+001, 9.962433e+000, -7.565683e+000, -1.753977e+001, -1.335059e+001, -6.610210e+000, 1.903469e+001, -5.438575e+000, -9.901476e+000, 5.311283e+000, -1.911579e+000, -1.016816e+001, -1.849429e+000, 5.039185e+000, -1.366237e+001, 9.227893e+000, 1.741280e+001, -4.685917e+000, 9.664951e-001, 1.643035e+000, 9.293059e+000, 6.854533e-001, -3.668429e+000, -6.366992e-001, 1.794961e+001, 1.821274e+001, -6.596446e+000, -4.336325e+000, 6.728509e+000, -8.730624e+000, 9.496124e+000, -2.774822e+000, -1.636567e+000, 1.108742e+001, 3.892868e+000, -7.117137e+000, -6.065507e+000, 8.249512e+000, 3.995541e+000, -1.871429e-001, 4.747928e+000, -3.564515e+000, 4.031942e+000, 4.171111e+000, 1.407661e+001, -1.250397e+001, 4.125820e+000, -1.215550e+001, 8.058912e+000, -8.839139e+000, -4.074097e+000, 2.840419e+000, 2.231509e+000, -1.998786e+001, 7.768074e+000, -9.622686e+000, -1.352473e+001, 4.785682e+000, 6.290105e+000, 1.437518e+001, -4.742606e+000, 6.121063e+000, -5.421103e-001, 1.563073e+001, 4.521665e+000, 7.747699e+000, -1.942353e+000, 5.861157e+000, -1.456801e+001, -4.517630e+000, -1.323461e+001, 5.864538e+000, 1.476108e+001, 2.588735e+001, -8.615593e+000, 1.052100e+001, -2.084652e+001, 7.015236e+001, 2.622978e+001, 4.027817e+001, -4.036229e+001, 3.133682e+000, 3.254081e+001, 3.985434e+001, 1.637985e+001, -9.137755e+000, 4.016823e+000, -1.094160e+001, 1.196121e-001, 4.394566e+000, -5.417776e+000, -4.948827e+000, -5.052625e+000, 8.409958e-001, -1.958734e+001, 1.715383e+001, 1.611701e+001, -6.545625e+000, 2.172660e+001, 7.016021e+000, -1.047070e+000, -1.041489e+001, -1.873722e+000, -9.314383e+000, -3.273971e-001, -1.231308e+001, -1.753535e+001, 6.483288e+000, -8.062921e+000, 4.101538e+000, -4.301263e+000, 7.643828e+000, 8.672913e+000, 1.210417e+001, 7.141128e+000, 6.923605e+000, 7.456034e+000, 1.242738e+001, 4.495489e+000, 2.374392e+000, 1.194682e+001, -6.877539e+000, -4.758848e+000, -1.046984e+001, 3.499611e+000, -4.091720e+000, -1.381689e+001, -7.143092e+000, -7.025341e+000, 1.429006e+000,

© ISO/IEC 2004 — All rights reserved


Copyright International Organization for Standardization
Provided by IHS under license with ISO
No reproduction or networking permitted without license from IHS
Not for Resale

8.460232e+000, -1.810580e+000, 9.656350e+000, 1.364538e+001, 1.366684e+001, 4.489496e+000, 9.669554e-001, 1.503743e+001, -1.328127e+000, 9.716779e+000, 1.384413e+001, 1.502103e+001, 1.291461e+000, -5.092889e+000, -1.424210e+001, 2.353785e+000, 1.400282e+001, -4.311055e+000, 2.741431e+000, -2.766263e+001, -2.201770e+000, -1.453170e+001, -2.147134e+001, 1.736957e+001, -2.519246e+001, 1.244397e+001, 1.660599e+000, 2.759634e+001, 1.476006e+001, 5.077468e+000, -3.967621e+001, 2.863808e+000, -3.855192e+001, 5.324738e-001, 2.539180e-001, -1.729228e+001, -1.612541e+001, -3.729897e+000, 8.686021e+000, 1.861457e+000, -2.293320e+000, 6.900154e+000},

{-1.939596e+001, -1.650933e+001, 1.588503e+000, 5.673282e+000, -1.012894e+001, 1.566749e+001, -7.680355e-001, 5.143594e+000, 3.574826e+000, 1.332081e+001, -2.409315e+000, -5.459080e+000, 1.136961e+001, -9.257472e+000, -1.158070e+001, 1.503250e+000, -1.823218e+001, -2.498081e+001, -2.945389e+000, -1.155580e+001, -1.038495e+001, -2.900434e+000, -9.347886e+000, 6.282780e-001, 1.092243e+001, 4.916878e+000, -1.390056e+001, -1.497353e+001, 9.870889e+000, -3.012711e+000, -5.107310e+000, 2.542107e+000, 5.839534e-001, 1.640244e+000, -6.270544e+000, -1.256616e+001, -1.511985e+001, -3.495976e+000, -2.075767e+001, 1.989495e+000, 1.608645e+000, -3.793819e+000, -3.690931e+000, 9.542870e+000, 9.319666e+000, -2.794661e+000, 1.193579e+001, -2.430888e+000, -2.039914e+000, -1.079652e+001, -1.041889e+001, 1.022639e+001, -1.333656e+001, 1.658665e+001, -8.610012e+000, -3.165103e+000, -2.908522e+000, -1.043236e+000, 9.109023e+000, 4.693785e+000, 8.789501e+000, -6.511546e+000, 6.875409e+000, 2.593216e+000, 4.249988e+000, 1.261809e+000, 4.462516e+000, 2.080285e+000, 3.388990e+000, -6.253908e+000, -1.083707e+001, 2.246450e+000, -1.123500e+001, 2.705321e+000, 8.504845e+000, 2.612739e+000, 1.959088e+001, 3.075056e+000, 3.716700e+000, -1.103422e+001, -6.216980e+000, -2.447571e+000, 2.094265e+001, -6.887366e-001, -1.809402e+000, -6.871784e+000, 2.832714e+001, 2.339186e+001, -2.085265e+001, 1.092456e+001, -2.311664e-001, 2.395448e+000, -2.475039e+001, -4.575169e+001, -2.263177e+000, 8.584991e-001, -2.008641e+001, -1.991515e+001, -9.209862e+000, 2.176812e+001, -1.174581e+001, -2.946703e+001, 5.609968e+001, 1.013797e+001, -1.550663e+001, -9.832124e+000, -1.718822e+001, -1.056523e+001, -1.776237e+001, 1.300755e+001, -3.620209e+000, 2.617980e+000, -1.431478e+001, 1.692832e+000, 3.018882e+001, 2.364293e+001, -2.911638e+000, 1.012607e+001, 1.044495e+000, -5.095503e+000, 4.260423e+000, 1.553353e+001, -2.529397e+001, 2.358526e+001, 6.911475e+000, 7.364950e+000, -7.326099e-001, 2.646638e+000, 1.168962e+001, 1.584507e+001, -9.912564e-001, -9.414247e+000, -3.030293e+000, 1.727437e+001, 1.383283e+001, -4.388282e+000, -8.345566e+000, 4.796734e+000, 2.476753e+000, 1.555366e+001, -6.140757e+000, 4.943703e+000, 2.462451e+000, 6.005021e+000, -1.460862e+001, -3.287701e+000, 2.830238e+000, 1.106673e+001, 3.783157e+000, -3.257645e+000, 2.874443e+001, 7.853845e+000, -6.382922e+000, -2.767249e+000, -1.552317e+001, 2.134955e+001, 8.105569e+000, -6.655142e+000, 1.652190e+000, 3.573166e+000, -1.526067e+001, -4.583881e-001, 4.770419e+000, 6.634092e-001, 6.854594e+000, -6.615981e+000, -7.751162e-001, 9.010523e+000, 1.036056e+001, -8.816006e+000, -3.186327e+001, -4.045654e+000, 3.363489e+001, 5.312374e+000, -6.598725e+000, 2.903603e+001, -3.678635e+000, -1.186301e+001, 2.358401e+001, -2.327858e+001, 2.213448e+001, 3.083605e+001, -1.863347e+001, 2.642569e+000, -2.949590e+001, -3.061022e+001, -1.630272e+001, 9.520801e+000, -1.069695e+000, -5.643729e+000},

{2.508558e+001, -2.176178e+001, -3.210616e+001, 2.704348e+000, -1.583351e+001, -2.176817e+001, -2.574783e+000, -2.715279e+001, 8.385437e+000, 2.820273e+001, 1.664504e+000, 1.009009e+001, 4.860575e+000, -1.256699e+001, 2.717998e+001, -3.450348e+001, -1.809778e+001, 2.301716e+000, -1.858182e+001, -2.354005e+001, -1.361540e+001, 6.352639e+000, -1.159195e+001, -4.133233e-001, -4.359490e+000, 7.272465e-001, -1.955186e+001, 1.108760e+001, -3.389071e+000, -1.215772e+000, -1.966351e+000, -1.439815e+001, 2.812156e+001, -2.617379e+001, 5.501812e+000, 6.950344e+000, -1.796593e+001, 1.095983e+001, 8.595870e+000, -4.440280e+000, 4.709523e+000, 4.248882e+000, -8.585143e+000, 6.307754e+000, 9.412849e+000, -8.870971e+000, 2.799879e+001, 1.618901e+001, 3.877671e+000, 2.969553e+000, 1.114528e+001, -3.862214e+000, -1.934797e+001, 7.667081e+000, -1.578204e+001, -4.230339e+000, 1.474679e-001, 3.710834e+000, 1.006969e+001, 4.289881e+000, -1.145559e-001, -5.599348e+000, -2.132150e+000, 7.281199e+000, 1.749527e+000, -3.380577e+000, 5.016017e+000, -7.477860e+000, -1.795178e+000, -4.772982e-002, -1.846724e+001, 1.316231e+000, 2.374265e+000, 3.738579e+000, -7.411216e-001, -1.179690e+001, -2.410163e+001, 9.395766e+000, -6.633020e+000, -4.087986e+000, 1.104418e+001, -5.329951e-001, -7.281619e+000, -5.404971e+000, -1.216033e+001, -1.406532e+001, 1.108253e+001, 1.041793e+001, -1.909479e+001, 4.534816e+001, 1.570514e+001, -1.651864e+001, -1.729834e+001, -4.609711e+000, 1.734314e+001, 1.931351e+001, 9.337862e+000, 1.581941e+001, -4.504742e+001, 3.125386e+001, -3.151343e+001, -2.185008e+001, -3.894235e+001, 1.129520e+001, 1.100660e+001, 3.550991e-001, -1.458037e+001, -3.427594e+001, 2.093131e+001, -1.440163e+001, 1.452974e-002,


© ISO/IEC 2004 — All rights reserved

--`,,```,,,,````-`-`,,`,,`,`,,`---
Copyright International Organization for Standardization
Provided by IHS under license with ISO
No reproduction or networking permitted without license from IHS
Not for Resale

3.140770e+000, 5.395019e+000, 1.183287e+001, -2.150128e+000, -1.282435e+001, -2.721085e+001, 2.276559e+001, -8.196215e-001, 1.365460e+001, 4.826194e+000, -2.022684e+001, -4.610073e+000, 2.220021e+000, -1.340917e+001, 3.564700e+000, -1.604499e+001, 4.902970e+000, 3.617535e+000, -5.603977e+000, 8.230495e+000, 5.969344e+000, -1.413812e+001, -3.689583e+000, -6.605543e+000, -1.189255e+001, -1.088948e+001, 8.192191e-001, -6.924810e+000, -4.916485e+000, 2.189358e+000, 9.731353e+000, -1.074656e+001, -1.086839e+001, -3.481833e+000, -6.829998e+000, -4.233712e+000, 2.491265e+000, -4.015993e+000, 8.095759e+000, -1.064238e+001, 1.467257e+001, 2.733418e+001, -4.124496e-001, 2.464483e+001, 1.246683e+001, -1.478828e+001, -1.410014e+001, -1.785383e+001, 1.407245e+001, -8.177449e+000, 2.703108e+001, -1.163349e+000, -3.647670e+000, -1.780396e+001, -1.023877e+001, 1.200758e+001, 4.374822e+000, 5.349974e+000, -1.703531e+001, -2.955312e+001, -5.993477e+000, 7.499725e+000, -1.288861e+001, -7.058900e+000, -2.693147e+001, 1.232351e+001, -1.242370e+001, -1.702092e+001, 8.650761e+000, -1.183095e+001, 1.366661e+001, 1.211937e+001, 1.682875e+001, 3.269752e+000, -1.916437e+001, -7.899031e+000, -1.649815e+001, -1.137578e+001, 1.099445e+001},
{-1.541503e+000, 6.755803e+000, -2.202079e+000, 3.513853e+000, 6.545643e+000, 1.043703e+001, -1.108953e+001, 1.847744e+001, -2.269860e+001, 6.443993e+000, 6.313560e+000, -9.474984e+000, -2.365263e+001, -9.146012e+000, -1.660202e+000, 9.446120e+000, 1.803359e+000, 3.861820e+000, -2.139524e+001, 2.688418e+001, 2.685245e+001, -1.074036e+001, -1.355811e+001, 1.617029e+001, -1.641791e+001, -1.380023e+001, 9.312030e+000, -1.394056e+001, 4.536104e+000, -8.830997e+000, -9.528081e-001, -1.854868e+001, -2.334560e+001, -1.164775e+001, -8.392665e+000, -8.498444e+000, 8.589463e+000, -1.042007e+001, 1.120923e+001, -2.829054e+001, 2.765585e-001, -7.411473e+000, -1.328235e+001, 1.073506e+001, -2.290340e-001, 2.030516e+001, -6.788491e+000, -1.046752e+001, 2.097941e+001, -3.266718e+000, -2.056902e+000, 2.573818e+000, -3.226439e+000, 7.717778e+000, 3.686563e-001, 6.626213e+000, 6.125268e+000, 3.043565e+000, -5.230992e+000, 9.707195e+000, -5.335127e+000, 1.402504e+001, 1.090254e+001, -2.948968e+000, -5.821816e+000, -9.265056e+000, 2.169132e+000, 2.442732e+000, 4.407386e+000, 1.693305e-001, 1.585366e+001, 1.186517e+000, 5.031152e-001, 1.779518e+000, -1.788507e+000, -6.486943e+000, -1.634247e+000, 3.997333e+000, -4.551208e+000, -1.547543e+001, -2.831372e+000, 8.504366e+000, -9.068711e+000, -2.692706e+000, -6.741332e+000, -1.576818e+000, 1.905986e+001, -3.105884e+001, 2.800314e+001, 1.941216e+001, 1.337092e+001, 1.104557e+001, -6.167831e+000, 1.614685e+001, -1.249687e+001, 2.815301e+001, -2.160643e+001, 6.237976e+000, -1.559914e+001, -3.446453e+001, -1.234915e+001, -1.183935e+001, -1.394346e+001, -1.738122e+001, -4.659636e+001, 6.360301e+001, 2.562720e+001, 6.132052e+000, 6.251733e+000, -4.375557e+000, -1.975107e+001, -2.205365e+000, 3.615508e+000, 2.782571e+000, 2.184225e+001, 1.723797e+001, -3.052607e+000, -3.192651e+001, 3.522910e+000, 1.216856e+001, 3.186778e+000, 1.025396e+001, 1.221724e+001, 4.435988e-001, 1.043468e+001, 2.019249e+000, -8.297120e+000, -5.217459e+000, 3.465365e+000, -1.685909e+001, -1.607829e+001, -7.504074e+000, -8.580945e+000, 1.136407e+001, 1.279030e+001, -1.270526e+001, -1.450376e+001, 6.605462e+000, 4.026897e+000, -2.521505e+000, -8.465664e+000, -9.335076e+000, -9.058231e+000, 8.048316e+000, 1.104841e+000, 1.621608e+000, -8.393523e+000, 2.875226e+000, -8.808033e+000, -1.659979e+000, -1.135474e+001, -5.308466e+000, 1.076373e+000, 1.133962e+000, -1.201182e+001, 4.985701e+000, 4.455609e+000, 2.252943e+001, -4.841639e-001, -1.112496e+001, 1.591397e+001, -2.526137e+000, 2.788382e+000, 1.097653e+001, 5.214026e+000, 9.027314e+000, 2.133248e+001, 3.444992e+000, 3.166696e+000, 8.466347e+000, -1.621489e+001, -1.498456e+001, 4.033276e+000, 1.832465e+000, 1.468331e+001, -1.946079e+001, -7.082895e+000, -1.525724e+001, -1.467583e+001, -1.686872e+001, 1.785272e+000, -2.895440e+001, -3.153659e+001, 3.193923e+001, -1.234153e+000, -1.252362e+001, -3.136558e+001, 2.291004e+001, -1.565289e+001, -9.445284e+000},
{-4.327793e+001, -3.313154e+001, -1.118463e+001, 1.401126e+000, 5.017248e+000, -8.558815e+000, 9.508043e+000, -4.608710e+000, -1.057703e+001, -1.042037e+000, 6.415100e+000, -1.208101e+001, -3.614772e+000, 2.868561e+001, -8.233497e+000, -8.948182e+000, 2.379352e+001, 8.581701e+000, -1.485922e+001, -1.446402e+000, -5.122617e+000, 5.163933e+000, -3.330404e+000, 1.482855e+001, -2.047015e+001, 1.314844e+001, -8.637265e+000, -3.413170e+001, 2.452637e+001, -9.866102e+000, 8.605324e+000, -3.730774e+001, -4.712871e+000, 2.818440e+000, -5.004883e+000, 2.336598e+000, 2.208387e+001, 2.286059e+000, -4.568086e+000, -9.459075e-001, 4.158212e+000, -1.589857e+001, -3.763957e+000, 1.771550e+001, 1.569282e+000, -1.490698e+000, -2.417318e+001, 2.230931e+000, -5.523881e+000, 7.475100e+000, 6.245274e-001, -5.281481e+000, 9.100941e+000, 4.892108e+000, -8.999732e-001, 1.167363e+001, 7.935460e+000, -6.024263e+000, 1.750034e+001, -3.497570e+000, -3.250711e-001, 9.728914e+000, 3.046423e+000, -5.825136e+000, 7.776412e+000, 2.899710e+000, 1.974190e-001, -7.219258e+000, -2.710674e+000, -1.846929e+000, 2.729259e+001, 7.704554e-001, -4.238100e+000,

© ISO/IEC 2004 — All rights reserved


Copyright International Organization for Standardization
Provided by IHS under license with ISO
No reproduction or networking permitted without license from IHS
Not for Resale

1.077454e+001, -6.502402e+000, 8.635836e-001, 7.725490e+000, 6.518757e+000, -4.055848e+000, -7.164893e+000, 5.544946e+000, -1.870861e+000, 1.128781e+001, 8.309047e+000, 1.142355e+001, -1.297665e+001, 3.925008e-001, 1.137190e+001, -1.231802e+001, 1.741013e+000, -1.623044e+001, -3.062720e+001, 1.563882e+001, 6.453260e+000, 1.025010e-001, 1.739268e+001, -3.653598e+001, -3.799428e+001, 3.626183e+001, -2.037835e+001, 2.428254e+001, -1.149424e+001, 2.412653e+001, 2.437837e+001, -1.647875e+000, -2.688281e+001, 5.572027e+001, -2.153836e+000, 1.330084e+001, -2.154794e+001, 1.283396e+001, 1.917621e+001, 2.098066e+000, 2.562212e+001, 1.341924e+000, -6.080229e+000, -9.329542e+000, 1.256407e+001, 3.051824e+000, -1.931032e+001, 1.042864e+001, -3.974115e+001, 2.009447e+001, -2.077978e+001, -4.037175e+000, 5.921191e-001, -2.033677e+001, 3.664934e+000, 1.079052e+001, 6.335326e+000, 1.526430e+000, -1.140079e+001, -3.840713e+000, -1.708474e+001, 1.205714e+001, -8.642763e+000, -2.254917e+000, 1.697477e+000, 1.828676e+000, -9.688043e+000, 6.652464e-001, 8.736824e+000, -3.037016e+000, -4.648688e+000, -6.969280e+000, 4.977702e+000, -7.109708e+000, -1.913624e+001, -1.950944e+000, 8.610151e+000, 2.176396e+001, 2.897070e+001, 1.007820e+001, 3.480791e+000, 8.703162e+000, -4.228434e+000, -1.543647e+000, -9.925891e+000, 2.367494e+000, 1.210004e+001, 3.989256e+000, -8.481225e+000, -5.814947e+000, -1.186458e+001, 1.330039e+001, 2.712637e+000, 3.354377e+000, -2.214073e+001, 3.336669e+000, 9.367563e+000, -1.207264e+001, -4.166493e+000, -5.829519e+000, 1.097422e+001, -1.662295e+001, 7.255630e-001, 1.068188e+001, -2.758742e+001, -3.135204e+001, 1.344989e+001, -4.374638e+000, 1.088240e+001, 2.766327e+001, 8.384886e+000, 5.723269e+000, -4.392073e+000, -1.384100e+001, 3.155171e+000, 1.446006e+000, -1.783790e+000},
{1.076614e+001, 5.127618e+000, -7.196666e-001, -9.501675e-001, 1.138880e+001, -1.235092e+001, -3.659709e+000, 6.096801e+000, 1.281418e+001, -4.537415e-001, -1.370326e+000, -1.510777e+001, -2.582883e+001, -1.255531e+001, -1.209561e+001, 6.982125e+000, 2.375198e+001, 1.706026e+001, 3.365903e+001, 2.676641e+000, 2.772262e+000, 1.657283e+001, 1.237653e+001, 2.543267e+001, 2.288016e+001, -1.227143e+001, 2.090101e+001, -1.509830e+001, -1.146658e+001, -7.629643e+000, 6.524400e+000, 1.160650e+001, 1.568961e+001, -6.430941e+000, 3.325412e+000, -2.090112e-001, -6.168509e+000, -1.008332e+000, 1.485606e+001, 9.153685e+000, 1.624178e+001, 4.884672e+000, 1.884645e+000, 9.371262e+000, -2.047319e+001, -1.364101e+001, -2.681320e+000, -1.191027e+001, 1.861766e+001, 1.482562e+001, -3.180691e+000, 1.643284e+000, 2.806926e+000, -7.740034e+000, 7.476433e+000, -9.956746e+000, -3.458347e+000, -6.339233e+000, -7.975447e+000, 2.883664e+000, 4.873902e-001, 4.548128e-001, -9.786010e-002, -2.516686e+000, -2.275832e+000, -3.603145e+000, -2.654596e+000, -7.299422e+000, 4.917693e+000, -5.350528e-001, 1.239564e+000, -1.683549e+000, -2.608142e+000, -3.884593e+000, -5.233680e+000, 8.675491e+000, -3.886347e+000, -1.857211e+000, -1.247011e+001, 2.154186e+000, 1.292548e+001, -4.601216e+000, 1.206639e+001, 4.435773e-001, -8.758115e+000, 9.331481e+000, 1.953474e+001, -4.541177e+000, 3.304751e+001, -1.887932e+001, -1.510120e+001, 3.749838e+000, 6.856812e+000, -2.778641e+001, 1.609403e+001, -8.887940e+000, -2.297160e+001, 1.136117e+001, 1.494388e+000, -1.118767e+001, -7.139434e+000, 2.451612e+001, 7.002625e+000, -1.530515e+001, -1.576374e+001, -2.200755e+001, -1.108166e+001, -1.528685e+001, -3.216075e+000, -4.652228e+000, -2.494490e+001, -4.271711e+000, -5.291774e+000, 1.520595e+001, -7.683463e+000, -7.032374e+000, -2.433211e+001, -6.495639e+000, -1.749295e+001, 3.583949e-001, 1.186350e+001, -3.280619e+000, 3.630820e+001, 2.619447e+000, -1.373001e+001, -2.928838e+000, 1.223686e+001, 6.562645e+000, -1.198244e+000, 2.616567e+001, -1.351836e+001, -1.842908e+001, -1.551504e+001, -5.484787e+000, -2.214021e+001, 2.333531e+000, 1.225027e+001, 2.572996e+001, 3.722315e+000, 3.848047e+000, -9.764625e+000, -1.111603e+001, -1.426969e+001, 3.859062e+000, 3.475543e+000, -5.146145e+000, -4.160832e+000, 3.246138e+000, 7.788807e+000, 7.541355e+000, -1.198313e+001, -2.456150e+000, -1.066419e+000, 1.857367e+000, 5.700749e+000, -1.877938e+001, -4.499879e+000, -4.457398e+000, 8.290923e+000, -6.389363e+000, -1.617615e+000, 6.254188e-001, -5.174401e+000, -2.185879e+000, -7.999430e-001, -7.561488e+000, 7.736961e+000, -8.676674e+000, -2.491093e+001, -1.634882e+001, -2.555315e+001, -5.349174e+000, 3.164457e+000, 9.789783e+000, 2.516501e+001, -2.193308e+000, 3.420833e+001, -5.314678e+001, 3.715754e+001, -1.373420e+001, -1.605091e+001, 7.938134e-001, 1.546239e+001, -6.776464e+000, 2.420526e+000, 1.066159e+001, 2.133255e+001, -3.126951e+000, -8.848830e+000, -2.055455e+001},
{2.909390e+001, 1.049064e+001, -1.600580e+001, 1.062061e+001, -1.919922e+001, -3.173408e+001, -1.122397e+000, -8.776566e+000, 3.149676e+001, -1.600660e+001, -1.798138e+000, -7.177600e+000, -1.280036e+001, 7.119946e+000, -1.645642e+001, 2.184465e+001, 4.113905e+000, -1.257167e+001, -3.386652e+000, 7.940869e+000, 2.534716e+001, -3.558307e+001, -2.310833e+001, -8.495565e+000, -1.605823e+001, 4.870976e+000, 4.084261e+000, -5.200247e+000, -3.103322e+001, -2.358920e+000, 8.114709e+000, -5.983510e+000, -2.788399e+001, 4.245043e+001, -6.865275e+000, 1.182614e+001, 6.223135e+000, 1.036478e+001, 9.415532e+000, 2.577737e+000, 1.334269e+001, 6.812047e+000, -1.555911e+001,


© ISO/IEC 2004 — All rights reserved

Copyright International Organization for Standardization
Provided by IHS under license with ISO
No reproduction or networking permitted without license from IHS
Not for Resale

8.740455e+000, -6.020709e+000, 1.000980e+001, 1.562601e+001, 8.013078e+000, 5.059851e+000, -3.274108e+000, 4.272072e+000, -1.175426e+001, -3.919653e+000, 1.076884e+001, 3.299607e+000, -2.809284e+000, 2.178063e+000, -3.170784e+000, -2.793343e+000, -3.187758e+000, -2.061799e+000, 5.093599e+000, -1.101617e+000, 2.770047e+000, -4.211243e+000, -2.598391e+000, 5.293915e+000, 4.317093e+000, 4.842654e-001, 1.154028e-001, -6.554602e+000, 5.099283e+000, 1.867080e+000, -9.841105e-001, 9.274926e+000, -4.614653e+000, 6.343097e+000, 1.556407e+001, -1.746432e+001, 1.114962e+000, -1.422183e+001, 1.935731e+001, 8.487887e+000, -7.470483e+000, -1.511499e+001, 1.549213e+001, -1.661514e+001, 1.220369e+001, 1.740348e+001, 1.353932e+001, -2.325992e+001, -2.352493e+001, -7.145430e+000, -7.353391e+000, -4.167214e+001, -1.598667e+001, -7.919987e+000, 1.437111e+001, 4.564621e+001, -4.785871e+000, -6.182365e+001, 2.760475e+000, -2.611473e-001, -5.026467e+000, 1.245025e+001, 2.329182e+001, 4.139285e+000, -9.812986e+000, 5.034819e+001, 1.612709e+001, -2.199538e+000, 4.414860e+000, -3.497942e+001, -6.747655e+000, -6.726359e+000, 1.028268e+001, 2.862800e+001, -4.011232e+000, 1.262682e+001, 2.540436e+001, 6.686728e+000, -1.443784e+001, 1.208418e+000, 9.814476e+000, -1.660217e+001, -1.656469e+001, 5.053708e+000, -2.001012e+001, -2.697768e+000, -3.140635e+000, 1.625928e+001, -3.544493e+000, -6.595970e+000, -7.702133e+000, 3.129302e-001, 1.455153e+000, 1.437010e+001, 5.161946e-001, -2.002421e+000, -5.210256e+000, -2.566687e-001, -2.186268e+001, 6.064859e+000, -1.256922e+001, -1.389021e+001, 8.113383e+000, -5.398741e+000, 3.223858e+000, 6.107474e+000, -8.700989e-001, -2.604728e+001, -1.781660e+001, 2.027819e+001, -1.607116e+000, 1.714684e+001, 1.286773e+001, -7.905212e+000, -1.319613e+001, 2.082083e+000, 4.939469e-001, -2.711839e+001, -4.483413e+000, -2.579992e+001, -9.882063e+000, -2.281401e+000, -4.662501e+000, -4.113360e+000, -2.140279e+001, -1.200256e+001, -6.344357e-001, -3.550824e+000, 8.796744e+000, -7.599917e+000, 6.701487e+000, -1.025965e+001, 6.143200e+000, -1.005193e+001, 1.119148e+000, 1.339444e+000, 1.755524e+001, -7.047746e+000, 9.780532e+000, 4.288003e+000, -2.805133e+001, 6.986593e+000, -1.007257e+000, 6.620342e+000, -1.103016e+001, -1.735056e+001, 4.168307e+000},
{-1.716168e+001, -9.693478e-001, -1.330981e+001, 6.872929e+000, -3.356040e-001, -7.866424e+000, -2.567776e+000, 2.510986e+001, -9.524571e+000, 8.792015e+000, 8.902631e+000, 1.502752e+001, -5.782903e+000, 9.327500e+000, -1.024282e+001, -7.666579e+000, -2.282964e+001, -9.363686e+000, 1.466439e+001, -1.884650e+000, 4.480797e-001, -3.312105e+000, 9.048966e-001, 2.508993e+000, -8.555552e-001, 3.710701e+000, -1.003693e+001, 4.578550e+000, -1.953455e+001, 7.097377e+000, 1.065663e+001, 3.051553e+001, -8.951382e+000, -1.853014e+001, 4.748380e+000, 1.800775e+001, -1.314402e+001, 4.142469e-001, -1.594104e+001, 4.056493e+000, -1.222748e+000, 1.676468e+000, 1.551401e+001, -4.378775e+000, 6.051018e+000, -6.624723e+000, -4.160488e+000, -1.959038e+001, 2.609555e+001, -1.725211e+001, -2.226180e+000, 6.457826e+000, 5.008795e+000, -4.548190e+000, -1.199989e+001, -3.963976e+000, -2.870781e+000, 9.207844e+000, -3.177955e+000, -7.367605e+000, -1.124963e+001, 9.515028e+000, -9.834036e+000, -8.247943e-001, 8.403976e+000, 2.261355e-001, -8.213619e+000, -7.602447e+000, 9.571585e+000, -1.806056e-001, 5.369528e+000, -4.900057e+000, -1.223657e+000, 6.135759e+000, -2.752026e+000, 2.343945e+000, 3.997990e+000, -1.108451e+001, 1.542616e+001, 2.819635e+000, 9.857402e+000, 1.739059e+001, -2.169276e+001, 2.717414e+001, 1.762117e+000, -1.082315e+000, 5.916310e+000, -7.133297e+000, 1.072838e+001, 1.178700e+001, 1.656866e+001, -3.117684e+001, 3.319101e+001, 1.756674e+001, 1.343286e+001, -2.029056e-001, 4.376800e+000, 3.255177e+001, -3.592299e+000, -5.703180e+000, 1.695561e+000, -8.459562e+000, 2.543422e+000, -9.659233e-001, -2.798550e+001, 1.204923e+001, 2.309164e+001, 1.138863e+001, 5.049764e+000, 3.703793e+001, -8.117265e+000, 2.305861e+001, -3.916972e+000, 1.345803e+001, -2.688426e+001, -3.502954e+001, -2.110878e+001, 6.491428e+000, -3.706326e+000, -9.422221e+000, -2.135372e+001, -1.297167e+001, -1.438096e+001, 4.973511e+000, 2.528803e+001, 3.809298e+000, -3.521454e+000, 7.628549e-001, -1.157707e+001, 1.955551e+001, 2.705227e+000, -3.692557e+000, -4.922195e+000, 2.608000e+001, -2.385657e+001, 3.688237e+000, -9.274097e+000, -6.742600e+000, -7.907612e+000, 3.609086e+000, -1.807945e+001, -1.644288e+000, 3.676789e+000, -8.095650e+000, -1.258039e+001, 4.769382e+000, -6.065096e+000, -7.054583e+000, 6.918393e+000, 1.420789e+001, 1.346739e+001, 6.980683e+000, 1.239770e+001, 6.982706e+000, 3.811431e+000, -6.669373e+000, 1.252199e+001, 2.395924e+001, 5.562207e+000, -9.656250e+000, 1.725349e+000, -1.457870e+000, 2.484678e+001, 8.994669e+000, 9.980694e+000, 8.800750e+000, 6.915557e+000, -1.999083e+001, -3.151916e+000, 3.067790e+000, 6.216254e+000, -6.244556e+000, -1.693397e+001, 1.575595e+001, -4.631298e+000, 3.259257e+001, -8.610160e+000, -2.033466e+001, 1.066008e+001, -2.690943e+001, 5.160902e+000, 3.054604e+001, 7.730195e+000, 1.738310e+001, 2.549719e+001, -3.740139e+000, -1.707549e+001, -2.874652e+001, -1.904521e+001, 2.556761e+000},
{4.993289e+000, 2.079018e+001, -2.849111e+000, -1.141890e+001, -2.879423e+000, -2.159728e+001, -1.179825e+001, 2.836553e+001, -9.189210e+000, -4.522520e+000, -1.489719e+001, -1.355895e+000, -1.676772e+001, -1.243887e+001, -

© ISO/IEC 2004 — All rights reserved


Copyright International Organization for Standardization
Provided by IHS under license with ISO
No reproduction or networking permitted without license from IHS
Not for Resale

5.818366e+000, 6.614733e+000, 3.909701e+001, 7.192551e+000, 4.103300e+000, -9.677581e+000, -1.571680e+001, -5.639113e+000, -7.560551e+000, 1.550830e+001, 4.646503e+000, -1.939090e+000, -1.674521e+001, 1.227959e+001, 1.665698e-001, -1.759878e+001, -6.275931e+000, -3.466896e+000, -1.771713e+001, -6.610970e+000, 4.551161e+000, 7.001404e+000, -1.355173e+001, 1.253359e+001, -1.123104e+001, -7.925918e+000, -1.547438e+001, -2.808221e+000, -2.490819e+001, -2.346681e+000, 1.112678e+001, -5.668373e+000, -1.169264e+001, -1.220221e+001, 6.771422e+000, -9.911240e+000, -7.871196e-001, -1.421327e+001, 8.041730e+000, -6.897317e+000, 7.060814e-001, -1.974598e+001, 1.448651e+001, 2.745001e+000, 6.209174e+000, -4.426324e+000, -5.170936e+000, 1.071759e+001, 6.241590e-001, -1.175438e+001, -7.779110e-001, 7.649439e+000, -5.438706e-001, 4.771832e-001, 1.533149e+000, 1.783781e+000, 4.721132e+000, -1.748482e+001, 1.764541e+000, 1.011713e+001, -1.307406e+001, -7.686226e+000, 4.385316e+000, 1.225828e+001, -9.158941e+000, -8.536345e+000, -9.010648e+000, -3.454520e+000, 3.282800e+000, 1.404360e+001, -1.523670e+001, 3.159878e+000, 1.231556e+001, -1.461521e+001, 1.059992e+001, -4.106352e+001, 2.044568e+001, -3.408848e-003, 8.132151e+000, 1.426894e+001, -1.519873e+001, -1.307079e+001, -4.070536e+000, 2.594388e+000, 2.428363e+001, -3.277518e+001, 2.917925e+001, -1.276883e+001, -1.250959e+001, -1.816344e+001, 3.357348e+001, 5.737020e+001, -3.501499e+001, 6.778806e+000, 1.132241e+001, -1.690964e+001, 9.227209e-001, -1.752746e+001, -6.580525e+000, -2.420623e+001, 6.818804e+000, 5.126759e+000, -5.721465e+000, 2.187986e+001, -9.697731e+000, -6.826710e+000, 4.285482e+000, -1.164972e+000, -8.092617e+000, 3.449996e+001, 1.610965e+001, 1.683475e+001, -1.584703e+001, 1.016621e+001, 1.143381e+001, 1.278984e+001, 4.305487e+000, 4.118043e+000, 3.588609e+000, -1.628049e+001, 4.038783e-001, 3.287134e+000, -6.301389e+000, 4.657393e+000, -4.007607e+000, 1.069216e+001, -7.152956e+000, 7.312610e+000, -5.695614e+000, 7.227073e+000, 6.556742e+000, -1.102255e+000, -1.172044e+001, -1.543752e+001, -5.378528e+000, -7.937394e+000, -8.934300e+000, -4.095582e+000, -1.714715e+000, -9.228072e+000, 1.374113e+001, 4.840448e+000, 5.069406e-001, 6.391434e+000, 1.444198e+000, -2.957309e+000, 1.518280e+001, -2.993453e+000, 7.496300e+000, 1.627944e+001, 1.681390e+001, 6.826098e+000, -1.370169e+001, -2.315363e+000, 1.699688e+001, 9.289169e+000, 8.430810e+000, -7.786366e+000, -3.384698e+000, -6.115621e+000, -3.485232e+000, -2.802713e+001, 2.446860e+001, 1.767192e+001, -1.458094e+001, 1.100422e+001, -1.450719e+001, 5.983776e+001, -1.110513e+001, -2.193431e+000, 2.225951e+000, 1.551803e+000, -3.644816e+000, 1.099837e+001, 2.410220e+001, -2.604735e+001},
{2.772363e+000, 2.347484e+000, -9.557507e+000, 1.203109e+001, 2.138302e+001, -5.197820e+000, 1.777024e+001, 3.339618e-001, -2.557722e+001, -7.789501e+000, 1.577908e+001, -1.259583e+001, 1.922464e+001, -6.876316e+000, -4.862909e+000, -6.049248e+000, -5.967493e-001, -6.758347e+000, 1.507973e-001, 1.391338e+001, -6.902740e+000, 3.300264e+000, -4.814755e+000, 6.924026e+000, 1.156640e+001, -9.142628e+000, -2.466561e+000, 1.626261e+001, 1.176820e+001, -1.075081e+001, 6.562534e+000, 1.343166e+001, -8.431077e+000, -1.263964e+001, -1.444144e+001, 3.342847e+000, -1.006068e+001, -7.362836e+000, 9.465194e+000, -6.223769e+000, -1.500270e+001, -2.705899e-001, -1.776132e+001, -7.192324e+000, -2.439046e+001, -1.117300e+000, -2.401867e+000, 6.663374e+000, 6.755281e+000, -1.023346e+001, -3.190496e+000, 1.040153e+001, -2.812491e+000, -1.253561e+001, -9.452327e+000, -1.511456e+001, -3.091481e+000, 2.504837e-001, 5.747678e+000, 4.141837e+000, -5.018997e-002, -7.355475e-001, 1.361384e+000, -8.222114e+000, 1.363513e+001, 6.328615e-001, 8.966545e+000, -1.203258e+001, 8.152881e-001, 3.456577e+000, -3.765249e-001, 1.156904e+000, -1.843680e+000, -1.755110e+000, -6.263060e-001, -1.306045e+001, -1.329174e+000, -6.872836e+000, -8.729985e-001, -1.041287e+001, 4.598457e+000, 5.511740e+000, 1.037576e+001, -6.393774e+000, 4.077775e+000, 1.101458e+001, 2.660929e+000, 7.030991e-001, -1.452986e+001, 1.145847e+001, 3.700320e+001, -3.018180e+001, -1.511407e+001, -1.668743e+001, 2.436950e+001, 1.402838e+001, -8.637884e+000, 7.801763e-001, 2.073890e+001, 3.921852e+001, 2.174405e+001, -1.872681e+001, -6.799178e+001, -3.472479e+001, 6.073023e+000, -1.564459e+001, 1.470912e+001, 2.237585e+001, -3.341915e+000, 2.200493e+001, -1.568341e+001, -8.863673e+000, 1.299174e+001, 1.209468e+001, -9.653256e+000, -5.083545e+000, 3.590860e+001, 3.843822e+000, 1.614846e+001, 1.655929e+001, 2.120871e+001, -2.269260e+001, -6.515176e+000, 3.720397e+000, 8.059504e+000, 1.732261e+001, 1.296132e+001, -1.544370e+000, 1.487196e+001, 9.163838e+000, -7.788144e+000, -1.825319e+001, 3.502996e+000, 3.048700e+000, 6.258912e+000, -1.327101e+001, -8.585109e+000, 9.287057e+000, -6.964439e+000, 5.900476e+000, -1.351018e+001, 1.045646e+000, -1.103577e+001, 3.422143e+000, -5.122113e+000, -1.390102e+001, -1.551724e+001, -5.143980e+000, 9.324513e+000, 5.640588e+000, -2.069751e+000, -4.435425e+000, 8.611995e+000, 1.146458e+001, -1.037732e+001, -1.110452e+001, -1.109564e+001, 8.479300e+000, 2.886587e+001, 1.843306e+001, 1.541396e+001, 1.006444e+000, -2.060455e+001, -4.416606e+000, 1.465201e+001, -9.981115e-001, -1.849878e+001, -9.769404e+000, -3.152449e+000, -3.611278e+000, 6.634780e-001, -4.677736e+000, 1.112038e+001, -4.932315e+000, 2.705734e+001, 3.004493e+001, -2.020639e+001, -2.139063e+001, -


© ISO/IEC 2004 — All rights reserved

Copyright International Organization for Standardization
Provided by IHS under license with ISO
No reproduction or networking permitted without license from IHS
Not for Resale

4.569124e+000, 1.803652e+001, -1.001850e-001, 1.377781e+000, 2.794177e+001, -9.657247e+000, 2.117530e+001, -2.689197e+001, -1.581378e+001, 2.332161e+001, 1.243406e+001, -1.310357e+001},
{1.831835e+001, 3.220597e+001, 1.859901e+001, -8.875587e+000, 3.649218e-001, -8.995651e+000, -9.271534e+000, -2.727301e+000, -1.928960e+001, 1.500416e+001, -5.041433e+000, 1.231944e+001, 1.637018e+000, -8.844609e+000, 1.389842e+001, -1.232557e+001, -2.794880e+001, -2.008317e+001, -1.932960e+001, 5.016849e+000, 5.909482e+000, 8.344997e+000, -9.468652e+000, -2.458296e+001, 1.945916e+000, -7.841257e+000, 2.515062e+001, -8.528834e-001, 1.557822e+001, -1.742809e+001, -1.025101e+001, -2.024047e+001, 2.738989e+001, -2.219163e+001, 6.289192e+000, -4.756918e+000, -1.197698e+001, 5.666448e-001, -1.354318e+001, 1.571387e+001, -9.836644e+000, -1.117871e+001, 1.426650e+001, -1.853978e+001, 5.619180e+000, 1.260686e+001, 4.014742e+000, -6.943880e-001, 8.743269e-001, -1.705036e+001, 6.347266e+000, -1.022701e+000, -5.142862e+000, 9.593059e+000, -1.286298e+001, 1.279461e+001, -4.545066e+000, -2.070776e+001, -4.867968e+000, 1.302897e+001, 2.197770e+000, 1.042275e+001, 1.229755e+001, 1.804842e+000, 3.362062e-002, -8.361710e+000, 2.128944e+000, -7.875285e-001, 5.790158e+000, -5.649456e+000, -1.008541e+001, -1.643715e+001, 2.679018e+000, -7.831283e+000, 1.242981e+001, -3.222332e-001, -7.711016e+000, 6.604998e+000, 8.469375e+000, -9.580003e+000, 2.480593e+000, 8.563297e+000, 4.306622e+000, -2.813747e+001, 2.120328e+001, 3.138226e+000, -1.325081e+001, -1.049292e+001, 1.622990e+000, 2.520422e+001, 1.470472e+001, 1.458362e+001, 3.482261e+001, -3.784172e+001, 5.414052e+000, 1.895733e+000, -3.680188e+000, 3.419183e+001, 3.794994e+001, 2.777013e+001, 1.467803e+001, -7.533189e+000, 3.782817e+001, -1.199722e+001, -3.116537e+001, 4.647501e+001, -4.777513e+001, -3.002700e+001, -9.465536e+000, -2.241808e+001, 2.115897e+001, 1.467659e+001, -2.758753e+001, -1.471255e+001, -2.042527e+001, -2.022184e+001, -1.737309e+001, -2.641826e+001, -1.932349e+001, -2.381255e+001, -3.521188e+000, -8.245944e+000, -1.526770e+001, -6.647548e+000, -1.869958e+001, -4.318484e+000, 1.007612e+001, -1.058653e+001, 7.080850e+000, -1.343458e+000, -5.427636e+000, 8.177101e+000, 1.219211e+001, -1.758303e+001, 1.902522e+000, 1.286635e+000, -7.740390e+000, -1.430258e+000, 1.351043e+001, -1.274986e+001, -2.637025e+000, 3.395564e+000, -4.615339e+000, 1.495296e+001, 9.869693e+000, 9.989902e+000, -7.059700e+000, -1.814753e+000, -4.496717e-001, 2.952531e-001, -9.921527e+000, -1.728445e+001, -1.618871e+001, -9.381988e+000, -2.522241e+000, 1.354612e+000, -5.043081e+000, 6.312937e+000, -7.042141e+000, 8.726609e+000, -4.259296e+000, -1.471498e+001, -2.109468e+000, -3.714224e+000, -9.632840e+000, -2.275154e+000, -4.748771e+000, 2.039350e+001, -5.687519e+000, 8.392060e+000, 1.067393e+001, -6.020755e+000, 8.249334e+000, 1.550558e+001, -4.065202e+001, -1.157314e+001, 2.207976e+000, -1.361130e+001, -8.214955e+000, -1.522492e+000, -1.105504e+001, 2.321542e+000, 4.382545e+000, -8.967303e+000, 8.955677e+000, 2.977742e+001, -1.705342e+001, 9.619596e+000, -2.864169e+000, -1.170892e+001},
{-1.913097e+000, -1.270054e+001, -9.520139e+000, 1.753353e+001, 3.672612e+000, 1.245461e+001, 3.209350e+000, 1.610645e+001, -8.540162e+000, 2.468631e+001, 1.336567e+001, -2.236764e+001, -2.048708e+001, 3.367002e+000, 1.730723e+000, 8.426448e+000, -1.033569e+001, 6.786222e+000, -2.257767e+001, 1.277839e+001, 2.599912e+001, 2.566866e+001, 9.535447e+000, -2.888147e-001, -6.421664e+000, 1.127768e+001, -6.421815e+000, -5.897951e+000, -2.676720e+001, 1.080782e+001, 1.900908e+001, 1.836667e+001, 3.769311e+000, -3.420991e+001, -5.381849e+000, -1.217783e+001, -1.545008e+000, -3.873167e+000, 2.827804e+001, -2.684255e+001, 6.919083e-001, 2.890471e+000, -1.477838e+000, 2.625780e+000, -5.492065e+000, 3.709698e+000, -8.902019e+000, 2.554142e+000, -1.231724e+001, -4.635864e+000, -7.775261e+000, 3.543011e+000, 1.017853e+001, 9.794078e+000, -4.271070e+000, -1.959776e+000, 9.046481e+000, 1.006603e+001, -7.729453e+000, 2.278824e+001, -1.633320e+000, -6.046784e+000, 3.301027e+000, 8.264721e+000, 2.300908e+001, -6.730775e+000, 2.560524e+000, 3.554698e+000, 3.177243e+000, 9.414675e+000, -1.544832e+000, -6.979231e+000, -1.725087e+001, -4.212944e+000, -7.846298e+000, -1.475435e+001, -4.779853e-001, 1.304768e+001, 2.383406e+001, -5.438736e+000, -3.075459e+000, 9.841873e+000, -1.036326e-001, 1.038210e+001, -4.980890e+000, -3.803509e+001, -1.028576e+001, 5.892339e+000, 2.967488e+000, -2.142029e+000, -2.052317e+001, -1.042174e+001, 6.397009e-002, -1.268196e+001, 1.949391e+001, 3.147387e+000, -2.450027e+001, -7.723370e+000, -5.729039e+000, 1.102123e+000, 2.146326e+001, 5.636162e+001, -3.658216e+001, 4.621805e+001, -4.413749e+000, 9.829621e+000, -6.337267e+000, 1.965807e+001, -3.495180e+001, 2.363413e-001, -3.255245e+000, -3.499068e+001, -1.314653e+001, -3.454784e+001, 1.676710e+000, 8.925109e+000, -1.278800e+001, 5.183623e+000, 1.375558e+001, -7.176084e+000, -3.971212e+000, -2.748301e+001, 5.594891e+000, 5.862476e+000, 2.261617e+000, -1.436900e+001, 8.713559e+000, -1.107796e+001, 1.287357e+001, -3.512844e+000, -8.784097e+000, 8.470320e+000, 9.288327e-001, 1.069006e+000, 7.481991e-001, -3.011280e+000, 9.819037e+000,

© ISO/IEC 2004 — All rights reserved


Copyright International Organization for Standardization
Provided by IHS under license with ISO
No reproduction or networking permitted without license from IHS
Not for Resale

1.046413e+000, -5.076240e+000, -2.363073e+001, -2.095617e+001, -1.560652e+001, -7.237866e+000, -1.736719e+000, -1.075603e+001, -9.080080e-002, 3.392189e+000, -1.320353e+001, 1.555483e+001, 8.264818e+000, 3.317923e+000, 1.899309e+001, -1.205845e+000, 9.371227e+000, -8.673960e+000, 2.158789e+001, -4.957334e-001, 7.120761e+000, -1.116197e+000, -1.826362e+001, 4.052969e+000, -2.410232e-001, -1.895285e+001, 2.244666e+000, 2.446557e+000, 1.213661e+001, 5.028978e+000, -6.313484e+000, 1.128076e+001, -1.740749e+000, 1.108198e+001, -1.068783e+001, 1.827354e+001, 2.066268e+000, -1.677245e+001, 6.482057e+000, -2.007248e+000, 1.096345e+001, 1.915918e+001, -1.035315e+001, -3.067164e+001, 2.658448e+001, -1.075009e+000, -5.304865e+000, 1.923216e-001, 2.238406e+001, -2.742092e+001, 1.162174e+001, -4.698641e-002, 2.764499e+001},

{-1.210437e+001, 4.473734e+000, 2.958871e+000, -1.653262e+001, -5.278028e+000, 2.526260e+001, 1.311577e+001, 3.334341e+001, -9.081955e+000, -2.879957e+000, -7.735026e+000, 2.065240e+001, -1.442063e+001, -1.628137e+001, 7.339638e+000, 2.443671e+001, -1.675764e+001, 4.062136e+000, -2.109295e+001, -8.868762e+000, 3.171805e+001, -1.334334e+001, -4.522766e+000, 5.754931e-001, -1.883285e+001, -2.878734e+001, -4.158166e-001, -3.267047e+001, -7.838458e+000, 1.494557e+001, -8.264214e-001, -1.891134e+001, -4.155711e+001, -3.029411e+001, -1.275970e+001, 6.603007e+000, -2.544269e+001, 1.454542e+001, 1.060318e+000, -2.000017e+000, 1.258653e+000, -6.727774e+000, -2.153808e+001, 1.377659e+001, 2.768719e+000, -5.311259e+000, 7.459162e+000, 1.454110e+000, 1.777272e+000, 6.902071e+000, 1.232179e+001, 3.564553e+000, 2.282071e+000, 6.347487e+000, 3.909826e+000, 1.177374e+001, -1.497890e+001, 2.963285e-001, -3.654711e+000, 8.174182e+000, 1.120000e+001, -1.364840e+001, 1.207806e+001, -5.144294e+000, 3.450256e+000, 8.805060e+000, 1.354986e+001, 4.854491e-001, -5.783603e+000, 8.441718e+000, 3.457580e+000, 4.620463e-001, 3.592023e+000, 3.329659e+000, -2.184100e+000, 1.574427e+001, 2.416497e+000, -1.128855e+000, 3.820509e-001, 5.674429e-001, -4.884115e+000, -2.852141e+001, 1.008785e+001, 1.232803e+001, -3.750155e+000, -1.061289e+001, -2.732084e+001, -4.945356e+001, 1.612690e+001, -3.267035e+001, -6.409459e-001, -6.112937e+000, -2.052535e+001, -4.089446e+001, 2.337137e+000, 5.244949e+000, 8.450743e+000, 2.310961e+001, 3.178549e+000, 1.660589e+001, 3.410746e+001, 2.197110e+001, -9.027998e+000, 1.709681e+001, 1.379521e+001, 8.227969e+000, 8.296656e+000, 4.702380e+000, -6.923125e+000, -2.253048e+001, -2.742481e+001, 6.736042e+001, -1.610977e+001, 1.908304e+001, 1.836387e+001, 3.432931e+001, -1.731842e+001, -1.430533e+000, 1.269939e+001, -1.639571e+000, -2.080998e+001, 9.039092e+000, -1.972043e+000, 1.657203e+001, 4.555252e+000, 1.968606e+000, -6.324390e+000, 3.981291e+000, 1.599893e+001, -4.201781e+000, -2.331974e+001, 8.637329e+000, 5.995969e+000, -2.008195e+000, 3.119992e+000, -6.623056e+000, -8.092856e+000, 8.192293e+000, -1.463970e+001, -9.147817e+000, 1.214779e+001, -7.718480e+000, 1.015931e+001, -6.715406e+000, -1.742787e+001, -8.507843e+000, -2.953103e+001, 2.560075e+000, 1.218909e+001, -1.289263e+001, 9.491231e+000, -1.733941e+000, -4.892355e+000, -1.199564e+001, -1.473809e+001, -4.519554e+000, -6.649273e+000, 9.278002e+000, 8.391453e+000, -5.446584e+000, 1.048521e+001, -8.293025e+000, 9.303642e+000, 2.327463e+000, -5.962591e+000, 1.720540e+001, 1.146562e+001, 2.700516e+001, 2.266376e+001, 2.742401e+001, -2.895576e-003, -2.090601e+000, 8.940714e+000, 2.453974e+001, 1.093481e+001, -9.006936e+000, -1.359255e+001, 8.466192e+000, -2.522685e+000, 2.125167e+001, 7.378051e+000, 1.540767e+001, 8.763359e+000, -1.150754e+001, -2.641829e+000, 4.894064e-001, -1.158919e+001, -2.628224e+001, 1.502288e+001, 1.514811e+001},

{-2.839878e+000, 1.902581e-001, -7.222214e+000, -8.128602e+000, 9.733756e+000, 1.464400e-001, 4.835066e+000, -3.718647e+000, 1.033938e+001, 2.494804e+001, -1.707998e+000, 5.009684e-002, -1.375296e+001, 1.335913e+000, -8.213066e+000, 1.105222e+001, -1.623295e+001, 2.268157e+001, -1.886871e+001, -1.043954e+001, -1.512296e+001, -3.999038e+000, -3.838132e+000, -1.240503e+001, 6.110069e+000, -2.809618e+001, -6.288173e+000, 8.251932e+000, 2.175817e+000, 1.977069e+001, 1.077629e+001, -1.065465e+001, -4.126984e+000, 3.368461e+001, 2.494038e+000, -3.899463e+000, 8.574520e+000, 8.463141e+000, 2.352053e+000, 2.663432e+001, 4.758216e+000, 2.351513e+001, 5.533855e-001, 1.342386e+001, -1.068947e+001, 3.023640e+000, -7.488555e+000, -1.463920e+000, 1.131497e+001, 7.240469e-001, -3.812750e+000, 1.251674e+001, -1.164801e+001, 5.518307e+000, -6.378340e+000, -1.436264e+001, -1.663483e+001, -6.041681e+000, 1.044705e+000, 8.874105e+000, 5.737700e+000, -5.115667e+000, -1.872956e+000, 9.609081e+000, -7.045033e+000, 2.071891e+000, 1.266473e+000, 3.936301e+000, 2.797801e+000, 7.157945e-001, -1.472683e+001, -1.992167e+000, -2.634001e+000, -1.290404e+000, 4.969261e+000, 1.104205e+001, -2.334721e-001, -1.576175e+001, -9.954786e+000, -2.125336e-002, -4.667012e+000, -1.785859e+001, -9.940461e+000, -1.785501e+001, -1.468409e+001, -9.780212e+000, 1.977052e+001, -8.584265e-001, 1.183809e+001, -6.983834e+000, -7.184375e+000, -2.484342e+001, 1.508838e+001, -4.312443e+001, -7.561797e+000, -2.368272e+001, -3.524977e+001, -1.095793e+001, 1.632731e+001, 9.270703e-001, 4.906406e+001, 8.202155e+000, -1.798037e+001,


© ISO/IEC 2004 — All rights reserved

Copyright International Organization for Standardization
Provided by IHS under license with ISO
No reproduction or networking permitted without license from IHS
Not for Resale

7.131944e+000, -4.741098e+001, 7.348950e+000, -1.869864e+001, -1.970397e+001, -5.586659e+000, 3.825471e+000,
3.012297e+001, 4.370489e+001, -3.834224e+000, 1.221550e+001, 3.326601e+001, 3.407677e+000, 2.148424e+001, 1.644974e+001, -
1.126864e+000, 2.269254e+001, 8.362098e+000, 9.037273e+000, 1.378509e+001, 1.193593e+001, -1.209768e+001, -1.821980e+001,
3.675181e+000, 2.447967e+001, -1.609913e+001, -1.029737e+001, -2.373240e+000, 6.547715e+000, -4.399930e+000,
2.083898e+001, -6.993474e+000, 1.763264e+001, -5.701620e+000, -5.311812e+000, 1.243794e+001, 1.509029e+001,
1.867019e+001, -1.340003e+000, -6.236422e+000, 8.968088e+000, 1.755027e+001, 6.294577e+000, -3.282022e+000,
5.940877e+000, 1.252691e+000, 2.907653e+000, 1.582305e+001, 4.590548e+000, 3.374514e+000, -1.214721e+001, -1.038498e+001,
-2.079740e+001, 9.480692e-001, 3.507915e+000, -1.142268e+001, 6.513270e+000, -1.984000e+000, 5.879897e+000, -
7.719861e+000, 1.490887e+001, 1.784719e+001, -4.532411e+000, 1.554865e+001, -2.336815e+001, -7.202072e+000,
4.769241e+000, -1.120200e+001, -1.707928e+000, -1.891803e+001, -7.957125e+000, 3.083478e+000, 8.346582e+000,
2.185857e+001, 3.779632e+001, -3.526539e+001, 6.285375e+000, -1.670928e+001, 2.236191e-002, -9.013748e+000, 1.427515e+001,
-1.114385e+001, 1.696780e+001, -1.135652e+001, 1.771568e+001, -3.044596e+001, -1.190895e+001},
{2.603911e+001, -2.677033e+001, -5.649137e-002, -1.168016e+001, -3.869042e+000, -4.495047e+000, 4.527205e+000,
4.822546e+000, -8.982551e+000, 2.809620e+001, -1.928051e+001, 5.850603e+000, 2.610937e+001, -7.862010e+000,
1.108608e+001, -6.336558e+000, -5.907128e+000, -1.310228e+001, 6.974944e-001, 8.957803e+000, 1.471225e+001, -
6.598533e+000, 1.705915e+001, -1.666952e+000, -7.961962e+000, 7.204157e+000, -8.765734e+000, 2.786256e+001,
2.460443e+001, 3.165450e+001, -8.928719e-001, -3.328978e-001, -4.843685e+000, -7.579643e+000, -2.676954e+000, -
2.960335e+001, 1.162666e+001, -8.979405e+000, -5.754637e+000, -2.362192e+000, 1.539783e+001, 5.314648e+000, -
2.647418e+001, -5.423040e+000, 1.134148e+001, -6.737795e+000, 8.023850e+000, -1.755536e+001, 1.983630e+001,
1.935824e+000, 1.326553e+001, 1.357729e+000, 6.241754e+000, -7.844306e+000, -2.876616e+000, -4.051031e+000, -
1.192398e+001, -1.515999e+001, -1.017999e+001, 9.095745e+000, -4.720074e+000, 6.743642e+000, -1.353808e+000, -
1.541744e+001, 9.670509e-001, 3.341706e+000, -1.720073e+001, -4.851639e+000, 1.320916e+001, -1.066139e+001, -
1.735496e+001, 1.666978e+001, -3.154757e+000, -8.935175e+000, 2.632791e+001, -1.905667e+001, -3.190513e+000,
4.643254e+000, -1.945406e-001, 2.402380e+000, 8.006528e+000, 3.033496e+001, 1.138389e+000, -4.995213e+000, 2.378212e+001,
-3.785561e+001, 2.337189e+001, -1.619662e+001, 1.519450e+001, -2.640150e+000, 1.351028e+001, -2.245075e+001,
2.204685e+001, 5.087170e+001, -1.605353e+001, 2.442163e+001, -1.567237e+001, -4.156423e-001, 2.141919e+001, 2.901767e+001,
1.977343e+001, -2.223875e+000, 1.995259e+001, 1.509674e+001, -9.144643e+000, -3.013517e+001, -1.345806e+001, 6.498916e-
001, -1.054646e+001, 3.392756e+001, -4.149027e+001, -1.957277e+001, -5.667552e+001, 1.572678e+001, -1.863118e+001,
1.656477e+001, -4.235658e+001, -2.467364e+000, 3.190512e+001, 9.080256e+000, 2.409041e+001, -2.084961e+001,
6.204408e+000, 5.445773e+000, 1.353188e+001, -5.831495e+000, 1.557713e+000, 1.493651e+001, 2.420762e+000, 1.016665e+001,
2.042007e+001, 2.374370e+001, -3.322628e+000, -2.469165e+001, -7.897296e+000, -6.667917e+000, -8.983923e+000, -
1.573813e+001, -3.227352e+000, -8.245134e-001, 7.760211e+000, 4.063351e+000, 1.773287e-001, -1.695009e+000, 1.615021e+001,
1.343973e+000, 3.495334e-001, 2.804149e+000, -3.302431e+000, -2.895852e+000, -1.351249e+001, 5.536098e+000, -
9.835925e+000, -1.377527e+001, -1.423884e+000, 5.570112e+000, 2.900687e+000, 1.637785e+001, -1.143507e+001, -
2.862452e+001, 6.368366e+000, -2.206978e+000, -1.431662e+001, -8.349408e+000, -1.521282e+001, 6.426196e+000,
8.315173e+000, -1.347060e+001, 1.901984e+001, -1.846783e+001, -2.938942e+001, -2.216184e+001, -1.154018e+001,
6.390178e+000, 1.616912e+001, -1.094231e+001, -7.105663e+000, 1.283908e+001, 5.240937e+000, 9.296821e+000, 2.003582e+001,
1.861819e+001, 1.174502e+001, -2.287301e+001, -2.033869e+001, -1.410512e+001, 2.665770e+001, -7.548322e+000, -
1.924762e+001, -1.911990e+001},
{1.093682e+001, -1.403429e+001, 3.380103e+000, 1.312778e+001, -2.772536e+000, -4.177263e-001, -9.882373e+000, -
3.393540e+001, 2.415491e+001, -1.079039e+001, -6.956411e+000, -1.857082e+001, 9.877021e+000, 1.178616e+001,
1.613185e+001, 1.529613e+001, -1.057450e+000, -7.904780e+000, 2.451118e+001, 2.201460e+001, -8.681704e+000, -
2.228581e+000, -3.429674e-001, -1.646441e+001, 5.852361e+000, 9.547118e+000, 1.265113e+000, -8.131511e+000, 1.079361e+001,
9.094324e+000, 5.832860e+000, -2.154827e+001, -3.859803e+000, 9.733761e+000, -1.610550e+000, 1.878349e+000, -
4.888507e+000, -3.315861e+000, 2.658137e+000, -1.555094e+001, 3.586667e+000, 1.634264e+001, 8.107957e+000, 1.439992e+001,
-1.957388e+000, -1.104064e+001, -1.120555e+001, -9.070991e+000, -1.844378e+001, 2.220832e+001, 6.333776e+000, -
7.838301e+000, 3.406727e+000, -1.830370e+001, 1.049645e+000, 1.427959e+001, 1.496644e+000, -1.703377e+001, -
1.029970e+001, -5.957756e-001, 1.026984e+001, -2.904365e+000, -2.122574e+000, 1.714695e+001, 1.090662e+001, 7.489595e-001,

© ISO/IEC 2004 — All rights reserved


Copyright International Organization for Standardization
Provided by IHS under license with ISO
No reproduction or networking permitted without license from IHS
Not for Resale

-2.852381e+000, -1.277646e+001, -2.630349e+000, 4.824345e-001, -2.431355e+001, -2.556557e+001, 4.385443e+000,
1.911064e+000, -7.490156e-002, 1.195178e+001, -2.024456e+000, -2.874907e+000, -4.304050e+000, 1.050533e+001, -
3.002425e+001, 7.715793e+000, -1.547303e+001, -2.792315e+001, -7.433673e+000, -1.740750e+001, -6.327344e+000, -
7.118154e+000, -2.336903e+001, -2.216921e+001, -9.679616e+000, 3.830010e+000, -4.045580e+000, 4.050155e+000,
3.364270e+001, -1.029873e+001, -3.794299e+001, 6.019228e+001, -2.495032e+001, 1.846223e+001, -2.233275e+001,
6.336243e+000, 4.343020e+001, 4.784276e+001, 1.184046e+001, 9.774763e+000, -1.645057e+000, 2.661622e+001, 2.655214e+001, -
2.105339e+001, 7.479675e+000, 2.317162e+001, 5.281139e+000, 5.679201e+000, 8.002516e+000, 9.340139e+000, 1.345849e+001, -
1.052404e+000, -2.335684e+000, 1.103463e+001, 9.246860e+000, -1.585394e+001, 6.966041e+000, -8.288145e+000,
2.037360e+001, 2.392208e+000, -2.275302e+000, -6.699238e+000, 3.491538e+001, 1.479586e+001, -1.955178e+000,
1.508392e+001, 1.120822e+001, -2.222303e+001, -7.371294e+000, 1.542371e+001, 6.058729e+000, 2.155914e+000, -
1.656610e+000, -3.032327e+000, -1.178242e+001, -3.079898e+000, -8.524336e+000, -1.537329e+000, 2.328169e+001,
5.138105e+000, 1.549063e+001, -4.302577e+000, -1.098663e+001, -2.568077e+000, 9.219161e+000, 3.227190e+001,
9.665920e+000, 8.671887e+000, -7.889422e+000, 9.695442e+000, 9.850536e-001, -3.744439e+001, 2.266449e+000, -1.573429e+001,
-4.303431e+001, 2.741954e+001, -2.450108e+001, -7.604386e-001, -3.009708e+000, -6.714789e+000, 1.619664e+000, -
3.034185e+001, -1.852388e+001, -2.871112e+000, 1.201760e+001, -1.730696e+001, -2.076096e+001, -1.597751e+001,
2.755168e+001, 6.045607e+000, 6.001012e+000, -1.417839e+001, 8.330309e+000, 6.139560e+000, -3.128429e+000, -
7.474661e+000, -2.699635e+001, 8.530866e+000, 1.497446e+001, -1.225257e+001, -1.040508e+001, -7.672383e+000, -9.059521e-
001, -5.315292e+001},
{-3.335520e-002, 6.371004e+000, -1.827249e+000, 3.467183e+001, 4.770179e+000, -6.129706e+000, -1.317410e+000, -
2.320726e+001, 5.060894e+000, 1.227302e+001, -2.327495e+001, -1.350844e+000, 7.546962e+000, -1.757958e+000,
7.152944e+000, 8.812882e-001, -4.310413e+001, -1.496086e+001, -2.641970e+001, -9.824298e+000, -6.979690e+000,
2.138950e+001, 1.904808e+001, -2.624923e+000, -8.518647e+000, 1.004083e+001, -1.059276e+001, 3.008635e+000, -
2.021181e+001, -1.471612e+001, -9.513534e+000, -3.499120e+000, 8.505830e+000, -4.183713e-001, 8.007737e+000, -
1.986006e+000, -1.953081e+000, 1.675233e+001, 1.002270e+001, -1.628958e+001, -7.328877e+000, 1.170463e+001,
1.469318e+000, 1.067613e+001, -1.667634e+001, 7.070889e+000, 1.313449e+001, -9.779837e+000, -1.405108e+001,
1.154017e+001, -1.507580e+001, 9.472962e+000, -9.401410e+000, 3.129664e+000, 1.092305e+001, 9.504171e-001, 4.719123e+000,
2.225916e+000, 2.672020e-001, 4.341928e-001, 6.858667e+000, 1.809789e+001, -6.501950e+000, -7.692884e+000, -2.108199e-001,
6.858508e+000, -2.737084e+000, 1.329212e+001, -1.809171e+001, -9.310559e+000, -2.951056e+001, -1.748176e+001, -
1.493210e+000, -9.541371e+000, 6.663533e+000, 7.457279e+000, -3.711718e+000, -1.108687e+001, -9.317742e+000,
1.619558e+001, 1.878447e+001, -2.880977e+000, 1.312397e+001, -1.429816e+001, 8.827649e+000, -3.307939e-001, 1.702586e+001,
-8.072722e+000, -2.524882e+001, 1.673887e+001, 3.069486e+000, 5.149811e+000, 1.697799e+001, -1.070864e+000, -
2.472667e+001, 1.146325e+001, 2.402294e+001, 5.760968e+000, -1.958953e+000, -2.331820e+001, -7.509091e+000,
1.967021e+001, 1.609911e+001, -2.445117e+001, -1.121516e+001, -1.238143e+001, 6.529673e+001, -4.774142e+001, -
2.745852e+000, 8.769758e+000, 9.439446e+000, -1.654845e+001, -1.000338e+001, 2.406810e+001, -1.526214e+001,
2.213046e+001, 7.573275e+000, 1.827015e+001, 1.707888e+001, -1.177610e-001, -1.415567e+001, 9.220664e+000, -1.713207e+001,
1.453475e+001, -3.465042e+000, -1.230526e+001, -1.980693e+001, -1.279472e+001, 2.398883e+001, -1.361721e+001, -
1.528724e+001, -2.335998e+001, 2.189711e+001, -1.690548e+001, 2.403594e+001, 1.347493e+001, -3.207137e-001, 2.365406e+001,
9.445203e+000, -3.010227e+000, -1.285624e+001, 3.940809e-001, -3.185468e+000, 5.980147e-002, 6.415191e+000, -5.713080e+000,
-9.399509e-001, -2.303338e+000, 2.920653e+000, -8.671764e-001, 2.473719e+001, 6.046768e+000, 1.766837e+001, 2.169706e+001,
-8.467559e+000, -7.832873e+000, -9.171513e+000, -1.533520e+001, -8.256063e+000, -1.482546e+001, -2.608045e+000, -
9.454075e+000, -4.275209e+000, -3.127809e+000, -1.500946e+001, 3.771886e+000, -1.473713e+001, -1.941628e+001,
2.146227e+001, -1.202021e+001, 4.967840e+000, -6.774217e-001, 9.060921e-001, 1.312125e+000, 1.162280e+001, 5.618472e+000,
1.718872e+001, 1.037913e+001, 1.711998e+001, -1.369574e+001, 2.588085e+001, 4.528945e+000, 6.802307e+000, -3.525930e+000,
2.475771e+001, 5.738908e+001, -6.374920e+000, -2.405002e+001, 2.186808e+001, -3.174399e+001},
{1.844541e+001, -6.865314e+000, 5.775613e+000, 1.034459e+001, -9.696619e+000, 6.219604e+000, 5.669082e+000, -
1.303906e+000, 3.042229e-001, -6.500862e+000, -3.176888e+000, 1.061772e+001, 2.213090e+001, 5.160432e+000, -1.129803e+001,
9.818497e+000, -7.229604e+000, 2.175990e+000, 1.059885e+001, -3.488589e+000, 2.197048e+001, 5.266288e+000, 1.822601e+001,
1.759111e+001, -1.167879e+001, -1.287865e+000, -1.843881e+001, 1.777148e+001, 1.067098e+000, -9.425328e+000, -


© ISO/IEC 2004 — All rights reserved

Copyright International Organization for Standardization
Provided by IHS under license with ISO
No reproduction or networking permitted without license from IHS
Not for Resale

4.779299e+000, 6.010286e+000, -1.509709e+001, 3.672461e+000, -1.494125e+001, -1.386654e+001, 2.057961e+000, 1.799158e+001, 2.320407e+001, -2.205630e+001, 7.798778e+000, 5.934608e+000, 1.718870e+001, 1.572987e+001, -3.191050e+000, 1.726254e+001, -1.153296e+001, -3.001786e+001, 1.260080e+001, -1.654306e+001, 2.169230e+001, -4.090883e+000, 1.574751e+001, -8.174665e+000, 1.227547e+000, 8.768611e+000, -1.006961e+001, 3.646080e+000, -5.443652e+000, -1.612042e+000, -1.193088e+001, -8.325144e+000, -8.264669e-001, 9.523051e+000, -9.790056e+000, -2.792924e+000, 2.017280e+000, 1.227764e+001, 7.197000e-001, 9.886137e-001, 8.476739e-001, 2.302143e+000, 9.141301e+000, -6.736782e+000, 1.555260e+000, -1.420303e-001, 3.809890e+000, -2.699286e+001, 1.364712e-001, 7.883516e+000, 1.965660e-001, -1.119334e+001, -2.187429e+001, 2.383658e+001, 2.643511e+000, -6.430576e+000, -4.902400e+000, 3.634830e+000, -6.785190e+000, -1.304466e+001, -9.833585e+000, -1.670753e+001, -8.180741e+000, -1.157361e+001, 2.519709e+001, -7.840528e+000, 2.672111e+001, -4.435489e+000, 3.167300e+001, 3.095762e+001, -1.421123e+001, 5.927257e+000, -3.235113e+001, 5.225748e+000, -3.483456e+001, 1.748035e+001, -3.351962e+000, 3.979601e+000, 2.069264e+001, 1.893761e+001, 2.959420e+001, -3.213395e+001, -3.369067e+001, 1.348653e+001, -5.926261e+000, 8.995706e+000, -9.317904e-001, -4.089954e+001, -5.440784e+000, -1.995165e+001, -1.879937e+001, -1.713874e+001, -1.535005e+001, -7.360810e+000, 6.667918e+000, -3.166263e-002, -2.303208e+001, 3.769594e+001, 7.741597e+000, 1.020863e+001, -3.058967e+000, -1.524831e+001, 9.208450e+000, 1.766044e+001, 1.028612e+001, 6.834384e+000, 3.009726e+001, 2.256650e+001, -3.885806e+000, -9.010385e+000, -7.509039e-001, -7.868190e-001, 2.295699e+001, 3.635659e+000, 1.724763e+001, 6.455001e-001, 5.150516e-001, 2.092458e+000, -1.078081e+001, -1.078203e+001, -1.900901e+001, 8.185654e+000, 3.796901e+000, 4.254445e+000, 2.775296e+000, 2.101018e+000, 8.799539e+000, 8.838642e+000, 7.517878e+000, -1.063305e+001, 1.514136e+001, 1.372005e+001, 1.247801e+001, 6.060676e-001, 2.549683e+001, 4.344419e+000, 3.413054e+000, -9.823986e+000, 4.775270e+000, -5.868888e+000, -2.140526e+001, 1.193353e+001, 3.307710e+001, -2.572063e+001, -2.123199e+001, -2.641011e+001, 5.555595e-001, -1.093589e+001, -2.244157e+001, -1.782234e+001, -1.588304e+001, -2.618032e+001, -2.643985e+001, -1.023262e+001, -1.606475e+001, -4.623783e-001, 2.793786e+001, -2.662875e+001, 4.786544e+001, 3.733287e+000},

{-3.548888e+001, -5.935178e+000, -2.652883e+000, -1.377896e+001, 3.505123e+000, -3.786671e+000, -3.376765e+000, -1.226186e+000, -1.353024e+001, -1.771763e+001, 1.074840e+001, 1.974130e+001, -5.902513e+000, 4.339625e+001, -4.884959e+000, 1.466909e+001, 5.444775e+000, -4.498460e-001, 1.630869e-001, -3.614867e+000, 4.505013e+000, -1.748989e-001, -2.004649e+001, -1.837849e+001, -2.182206e+001, 1.321146e+001, -2.666362e+001, 7.134115e+000, -1.052151e+001, -8.339549e+000, -1.667951e+000, -6.259633e+000, 2.316470e-001, -2.806480e+001, 5.766760e+000, 3.246702e+000, -9.993812e+000, -4.178033e+001, 1.069022e+001, -1.322924e+001, 3.905614e+000, -3.215043e+000, -3.697010e+000, -2.528816e+000, 2.124359e+001, -3.151027e+000, 6.795207e+000, 1.187558e+001, -1.142229e+001, -6.974978e-001, 2.032810e+001, -1.041102e+001, -2.196141e+001, 8.998769e+000, -2.842405e+000, 1.219593e+001, -5.512092e-001, -1.800178e+001, -1.108279e+000, -7.740059e+000, -1.493079e+000, 1.779674e+001, 3.508329e+000, -1.167681e+001, 1.942939e+000, 2.106935e+000, 3.242775e+000, -1.235906e+001, 9.548379e+000, 6.216090e+000, 7.869524e+000, -3.576115e+000, -4.275937e+000, 5.041171e+000, -3.977928e+000, -2.581695e+001, -9.729491e+000, -7.372301e+000, 3.775968e+000, 3.901664e+000, 7.069148e-001, 6.153738e+000, -1.816741e+001, 6.568952e+000, -1.046630e+001, 2.218678e+001, -1.421757e+001, -1.280442e+001, -7.122936e+000, -3.893495e+001, 3.777075e+000, -2.113436e+001, 1.592000e+001, -1.690957e+001, 1.571121e+001, 1.241115e+001, -2.875970e+001, 1.428571e+000, -4.317322e+000, -1.249244e+001, 9.192740e+000, -4.161566e+001, 2.103721e+001, -2.453767e+001, 1.058880e+001, 1.247680e+001, 1.759468e-001, 3.502065e+001, 2.612660e+001, -4.957037e+001, 1.449624e+001, -8.298363e+000, -2.076415e+000, 3.330016e+001, 1.941378e+001, -1.022244e+001, -5.463504e+000, -5.699633e+000, 1.582861e+001, 3.075576e+001, 3.686874e+001, 2.725445e+001, -3.743017e+000, 1.120246e+001, -2.177157e+001, 5.374053e+000, -3.182730e-001, 3.950050e+000, 9.262302e-001, -2.123410e+001, -5.181453e+000, 4.430124e+000, -1.574984e+001, 1.521546e+001, -2.067052e+001, -2.357775e+001, 1.292492e+001, 7.655089e+000, -5.091716e+000, -2.721749e+001, -6.536891e+000, -8.928603e+000, 4.235896e+000, -1.255272e+001, -2.267662e+001, -5.869535e+000, 1.086600e+001, -1.481018e+001, 9.693520e+000, -1.761078e+001, 2.913539e+001, 8.486972e+000, -1.370351e+001, -7.821192e+000, 7.715142e+000, 4.643403e+000, -7.316903e+000, 1.357394e+001, 1.717875e+001, 9.962663e-001, 1.832162e+001, -7.057291e+000, 3.943084e+000, -2.366551e+001, 1.505483e+001, -5.828349e+000, -7.836459e+000, -1.442911e+001, -6.624327e+000, -1.279884e+001, 1.954577e+000, -1.368965e+001, 2.080644e+001, -1.639921e+001, 4.395459e+000, 1.527338e+001, -3.441746e+000, 1.944007e+001, 2.534519e+001, -6.528523e+000, -1.841588e+000, -2.452196e+001,

© ISO/IEC 2004 — All rights reserved


Copyright International Organization for Standardization
Provided by IHS under license with ISO
No reproduction or networking permitted without license from IHS
Not for Resale

6.834782e+000, -9.493482e+000, -4.447621e+000, 2.013823e+001, 1.808201e+001, -6.638624e+000, -1.985833e+001,
2.117949e+001},
{1.295956e+001, 4.352508e+000, 4.658627e+000, -1.305573e+001, 1.325073e+001, 1.184920e+001, 8.650219e+000, -
3.286214e+001, 7.302059e+000, 1.371331e+001, 6.521930e+000, -1.691648e+001, -2.008244e+001, -1.631814e+001, -
1.511241e+001, -8.276442e+000, 7.566382e-001, 3.948057e+000, -1.447799e+001, -1.681779e+000, -4.747990e+000, -
1.161691e+001, 8.834586e+000, 2.105547e+000, -2.381910e+001, 1.304732e+001, -1.014881e+001, 2.681376e+000, 1.809472e+001,
-3.484134e+000, 1.983530e+001, 9.959784e+000, -6.269831e+000, 6.747922e+000, -4.397011e+000, -6.618403e+000,
5.237497e+000, -7.307140e+000, -4.201426e+001, -3.044578e+001, -9.653722e-001, -1.650579e+001, 6.877085e+000,
1.183969e+001, -3.073828e+000, 6.898473e+000, -3.358104e+000, -1.657501e+001, 5.359376e+000, -1.237953e+001, -
7.959314e+000, 3.557712e+001, -4.680701e+000, 2.243001e+001, -6.845397e+000, 4.972352e+000, -1.018977e+001, -
5.648756e+000, 7.288486e+000, 8.938839e+000, -2.437331e+000, -8.266176e+000, -8.082997e+000, 3.234106e+000,
6.981495e+000, -5.002024e+000, -5.096056e+000, 3.885663e+000, 4.952115e+000, 1.327178e+001, 9.677210e+000, 2.487267e+000,
2.094131e+001, 6.257806e+000, 4.238608e+000, -5.877493e+000, -1.566784e+001, 1.106982e+001, 1.180965e+001, -
1.553676e+001, 2.234432e+001, 7.846032e+000, 1.132616e+000, -1.196991e+000, -6.857425e+000, 1.674735e+001, -
4.070574e+000, -1.490932e+001, 9.192410e+000, 2.183497e+001, -1.621727e+000, 1.790735e-003, -1.992050e+001, -
9.328502e+000, 5.108317e+000, -2.362629e+001, 2.446489e+001, -7.073327e+000, 1.902702e+001, 3.642704e+001, -
7.856367e+000, -9.490679e+000, 3.311484e+001, 3.458512e+001, -1.510667e+001, -1.215183e+001, 3.853205e+001,
2.311931e+001, 3.117889e+001, -2.016669e+001, -2.020961e+001, -6.971976e+000, 7.411816e+000, -1.763123e+001,
2.581359e+001, -1.695553e+001, -1.411076e+001, 3.461847e+001, -2.730857e+001, -1.994139e+001, -1.931333e+001, -
1.388389e+001, 9.150668e+000, 2.596936e+001, -1.235644e+001, 9.027502e+000, 1.193383e+001, 4.621615e+000, 3.399420e+000, -
2.219278e+001, 7.625950e+000, -1.692078e+001, -3.209567e+000, 1.368305e+001, 1.060145e+001, 2.043974e+001, 1.599419e+001,
-2.704237e+000, 6.795624e-001, -3.576324e+001, -1.356737e+000, -2.090475e+001, 2.571324e+000, 1.659003e+001,
1.511981e+001, -3.806436e+000, -1.374235e+001, -1.307081e-001, -8.815022e-001, 8.762577e+000, -2.271806e+001, -
7.721684e+000, 5.789511e+000, -4.341821e+000, -1.515455e+001, 3.549376e+000, -1.188976e+001, -1.899431e+001, -
1.951009e+000, -2.370874e+000, 6.423190e+000, 7.353633e-001, -1.957602e+001, 1.763627e+001, -6.832994e-001, 1.278730e+001,
-1.571593e+001, 2.377970e+001, -3.888206e+000, -5.789481e+000, -2.596598e+000, -1.449372e+001, 1.076051e+001,
1.967364e+001, 3.747474e+001, 6.659948e+000, 3.485588e+001, 2.671372e+001, -2.798566e+001, -2.364805e+001, -
1.675708e+001, 4.239012e+000, 3.963990e+000, 2.813881e+000, 3.892747e+000, 1.314071e+001, 2.539995e+001, -4.247141e-001, -
5.802645e+000, -3.135775e+000},
{3.673678e+001, 1.238460e+001, -2.969160e+001, 4.082516e+000, 3.389327e+000, -8.269054e+000, -5.323291e+000,
1.981058e+001, -1.657106e+001, -2.634135e+001, -4.258982e+000, 2.952983e+001, 1.720639e+001, -2.021115e+000, -
2.719924e+000, -6.967586e+000, -6.904433e+000, -2.477917e+000, 8.385197e+000, 2.253836e+001, -7.357696e+000, -
4.245989e+000, -7.025489e+000, 8.625130e+000, -2.477275e+001, 1.416532e+001, -1.669744e+001, -1.734782e+001,
4.019223e+000, -1.938506e+000, 8.592522e+000, 9.995129e+000, 2.928214e+000, 3.301421e+001, 6.915282e+000, 2.178501e+001, -
7.061804e+000, -2.309135e+001, 4.362101e+000, 1.520517e+001, -2.440645e+001, -1.724535e+001, 7.000067e+000, -
7.129658e+000, -6.471925e+000, -9.558297e+000, -9.725200e+000, 2.207763e+000, -7.039456e+000, 1.089395e+001,
6.089289e+000, 1.998493e+000, -1.175455e+000, -1.952274e+001, -3.167041e+000, 6.196274e+000, 7.720068e+000, -
1.768885e+001, -2.817840e+000, -2.955238e+000, 2.628757e+001, -1.307607e+001, 1.020491e+001, 1.259756e+001, -
6.862914e+000, -4.119747e+000, -1.397509e+000, -1.107341e+001, -7.043446e+000, -5.386498e+000, -2.311589e+001, -
4.615607e+000, 5.404559e+000, 1.033496e+001, -3.880648e+000, 9.529916e+000, -4.099416e+000, 1.525589e+001, 5.572449e+000,
3.028299e+000, -2.131604e+001, 1.398334e+001, 2.114856e+001, 2.506244e+001, -9.391499e+000, -6.239449e+000,
1.464115e+001, 1.369267e+001, -7.853362e-001, 2.888980e+001, -2.463739e+001, -2.320844e+001, -5.201866e-001, 5.749829e+000,
1.822718e+001, 1.999648e+001, -8.406994e+000, 7.129684e+000, -1.592232e+000, -2.054660e+000, 2.207975e+001, -
1.460263e+001, -1.792328e+001, -7.639502e+000, 6.394831e-001, 6.404562e+000, 9.593469e+000, 2.141535e+001, -1.273885e+001,
6.389776e+001, -6.341059e+001, 6.170931e+000, 4.098516e+001, 3.963735e+001, -1.141610e+001, 3.609558e+001, -
8.157716e+000, -1.736832e+001, -3.410683e+001, 2.242815e-001, 2.352139e+001, 2.953781e+001, 7.859314e+000, 1.513822e+001,
-3.548137e+001, -2.628666e+001, 3.047595e+001, -1.331443e+001, 1.404600e+001, -9.059108e-002, 6.078925e-001, 8.974417e+000,
1.636013e+001, -9.847381e+000, 1.162370e+001, -1.028907e+001, 2.551638e+001, -8.880571e+000, 2.667630e+001, -


© ISO/IEC 2004 — All rights reserved

Copyright International Organization for Standardization
Provided by IHS under license with ISO
No reproduction or networking permitted without license from IHS
Not for Resale

1.079911e+001, -1.560142e+001, 1.737446e+001, -4.482620e+000, -9.561632e+000, 4.470237e+000, 8.485348e+000,
1.508384e+000, -7.095395e+000, -2.371756e+000, -9.988804e+000, -1.897299e+001, -7.995064e+000, 2.829498e+001,
1.969880e+000, 4.100665e+000, -2.388046e+000, 1.270153e+001, -9.844284e-001, 3.201719e-001, -9.117752e+000, 7.066012e+000,
1.395273e+001, 1.040915e+001, -2.438958e+001, 7.957406e+000, -3.102217e+000, 1.055425e+000, 3.968924e+000, -
3.245243e+000, 7.076954e-001, -8.375735e-002, 3.745840e+000, 1.016725e+001, -9.747425e+000, -2.127447e+001, -1.614704e+001,
1.281317e+001, 2.212890e+001, 1.079796e+001, -1.256042e+001, -2.864200e+001, -9.652063e+000, -1.206188e+001,
1.735068e+001, 1.339141e+001, -9.147844e-001, 2.587421e+001, -6.616772e+000, 3.337642e+001, -8.689253e+000},
{-2.715146e+001, -3.293930e+000, -8.244240e+000, -1.845577e+001, 5.104168e+000, 1.686958e+000, 3.744754e+001, -
1.648578e+001, 8.302161e+000, 1.340448e+001, 6.308836e+000, -1.517394e+000, 1.108952e+000, -4.708159e+001, -
1.386879e+001, -3.276484e+000, 1.652055e+001, 1.611242e+001, 2.451548e+001, -9.441177e+000, -1.373573e+001,
7.971408e+000, 1.004106e+000, -9.202730e+000, 1.844536e+000, 8.340339e+000, 1.472192e+000, 1.295451e+001, -2.592615e+001,
1.255979e+001, -1.196484e+001, 4.248904e+000, 3.099588e+001, 2.974564e+000, -2.488143e+001, -1.537821e+001,
1.494486e+001, 1.150146e+001, 1.402195e+001, 3.648984e+000, 2.763481e+000, -1.374612e+001, 3.837105e+000, -3.012763e+000,
-3.029619e+000, -4.367337e+000, -2.765548e+000, 1.953531e+000, -8.093696e+000, -9.203659e+000, 1.520059e+000,
1.894441e+000, 4.911018e+000, -4.360233e+000, -1.030681e+001, -3.801245e+000, 8.445520e+000, -1.040337e+001,
1.221511e+001, 1.144305e+001, 1.496165e+000, 1.007474e+000, 1.235456e+001, 5.457199e+000, -8.442505e+000, 2.965527e+000,
1.943424e+001, -5.678690e+000, 1.907094e+000, -3.742604e+000, 3.366827e+001, 4.248196e+000, -4.287250e+000,
1.133053e+001, -1.917420e+001, -1.545591e+001, -1.031471e+001, 4.752777e+000, 8.685609e+000, 2.761479e+000,
9.805692e+000, 8.022664e+000, 1.946511e+001, 4.951123e-002, -6.109657e+000, -2.483447e+001, 2.017676e+001, -1.402189e+001,
-1.720734e+001, 9.991280e+000, -3.061140e+001, 2.367821e+000, 3.012425e+001, 4.101629e+000, -8.519449e+000,
3.368654e+001, 1.270187e+001, 7.005701e+000, 3.337661e+001, -3.059213e+000, -3.952942e+000, -2.886329e+001, -
7.197513e+000, 6.463544e+000, 1.661772e+001, 1.775836e+001, -1.788235e+001, -3.608330e+001, 2.016497e+001, -
2.074919e+001, 7.533879e+000, -1.083829e+001, 1.620330e+001, 2.928989e+001, 1.087711e+001, 6.528298e+001, 8.852095e+000,
4.308807e+001, -2.831584e+001, -3.228272e+001, -1.283639e+001, -1.512640e+001, 3.138627e+001, -1.408773e+001,
4.049828e+000, 2.544708e+001, 4.348540e+001, 2.422868e+001, 1.182024e+000, -1.200276e+001, 6.066946e+000, 2.463143e+001, -
1.460930e+001, 2.355771e+001, 1.198306e+001, 1.802198e+001, 1.310487e+001, 2.161084e+001, -2.216669e+001, 3.246770e+000, -
8.390706e+000, -5.043059e+000, 5.951985e+000, -1.044544e+001, 1.270930e+001, 1.105090e+001, 1.482865e+001, 1.884330e+000,
-7.700135e+000, 1.441365e+001, -6.119642e-001, 3.775700e+000, -7.353401e+000, -2.751489e+000, 2.639249e+000, 6.031729e-001,
-1.795329e+001, -2.129243e+001, -1.871201e+000, 1.042054e+001, -1.656804e+001, 1.182286e+001, 1.951695e+000,
2.136194e+001, 2.658857e+001, -1.183193e+001, -1.813724e+001, 1.125197e+001, -2.018816e+001, -3.954252e+000,
1.672878e+001, -1.368798e+001, 1.132317e+000, 4.279503e+000, 2.554870e+001, 2.708100e-001, -3.384202e+001, -4.966475e+000,
2.214811e+001, -4.279635e+000, 1.481652e+001, 5.082983e+000, -1.185780e+001, 6.580487e+000, -1.838992e+001, -
1.402970e+001, -3.786827e+000, -1.624214e+001, 1.503922e+001, 1.596394e+001},
{-1.675184e+001, -3.286198e+000, -2.137269e+001, -1.188590e+001, 1.289844e+001, -3.898282e-001, 6.649125e+000, -
3.487516e+000, -2.146931e+001, -2.232651e+001, 5.662209e+000, 2.170455e+001, 2.797920e+001, 1.068434e+001, -
8.452577e+000, -1.735895e+000, -4.514296e+000, -1.290351e+001, 3.304839e+000, -4.497470e-002, 2.914170e+001, -
5.634976e+000, 1.092079e+001, 3.830824e+001, 1.926490e+001, -6.440870e+000, 1.968518e+001, 1.530557e+001, -1.236173e+001,
-1.598712e+001, -1.852209e+001, 2.828129e+000, -3.438129e+001, 5.210800e+000, 6.201957e+000, 8.587225e+000,
1.053938e+001, 2.541738e+001, 1.742144e+001, 6.670297e+000, -2.526286e+001, 5.581267e+000, 1.005710e+001, 1.519969e+001,
8.374751e+000, 4.136924e+000, -2.362338e-001, 9.854241e+000, -8.235002e+000, 6.902478e-001, -2.501546e+000, -3.138398e+001,
3.091135e+000, 4.804906e+000, -7.551206e+000, 1.694207e+001, -1.320727e+001, -1.334033e+000, 1.390793e+001, -
1.523956e+001, -3.583025e+000, -1.671722e+001, 1.807114e+000, 1.054988e+001, 2.840973e+000, -4.175631e+000,
9.181424e+000, -2.728513e+000, 5.231760e+000, 5.813899e+000, 5.613204e-001, -2.216789e+000, 1.874705e+001, 1.208726e+001,
5.681510e+000, -1.117073e+001, -1.353062e+000, 1.455926e+001, 1.299452e+000, -2.082664e+001, -1.204363e+000,
5.297867e+000, 4.631168e+000, 1.701639e+001, -1.584634e+001, -3.190867e+001, 1.241966e+001, -9.531534e+000, -
1.547107e+001, 3.887646e+001, 4.371099e+000, 1.142162e+000, 8.180162e-001, 5.845521e+000, 6.253696e-001, 1.514201e+001, -
4.021706e+001, -1.774128e+001, 4.769138e+000, -1.801593e+001, -1.248479e+000, 2.830142e+001, 8.966182e-001, 1.813135e+000,
-2.695678e+001, -4.706905e+000, -4.231260e+001, -1.336772e+001, 6.387779e+001, -1.985745e+001, -3.065512e+001,

© ISO/IEC 2004 — All rights reserved


Copyright International Organization for Standardization
Provided by IHS under license with ISO
No reproduction or networking permitted without license from IHS
Not for Resale

3.114876e+001, 3.606248e+000, -3.644900e+001, -1.927839e+000, -1.328635e+001, -2.434390e+000, -7.570358e+000, -1.144826e+001, 3.528696e+000, -1.327733e+001, -1.460857e+001, -1.452868e+001, -1.687615e+001, 7.234637e+000, -5.415583e+000, 3.128495e+001, 1.296828e+001, 4.064310e+000, 1.496582e+001, -2.564525e+000, -4.939228e+000, -4.396198e+000, 6.456393e+000, 2.839055e+001, -2.067291e+001, 6.677270e+000, 8.849419e+000, 1.147484e+001, -2.240464e+001, -8.557576e+000, 8.796114e-001, 1.389045e+001, -1.211434e+001, -7.362679e+000, -5.186448e+000, 4.766342e+000, -3.763946e+000, -1.186856e+001, -1.305201e+001, 1.561796e+001, 1.404691e+000, 2.705453e+001, -1.129150e+001, -1.314963e+001, 1.181844e+001, -4.601778e+000, -1.048363e+001, 7.124933e+000, -1.775757e+000, 1.615296e+001, -5.561512e+000, 5.801380e+000, -2.325408e+001, 1.575307e+001, 1.563055e+001, -1.849701e+001, 2.005899e+000, 1.490532e+000, -1.788133e+000, -1.140437e+001, -2.150544e+001, 2.561614e+001, -1.953181e+001, 2.107107e+001, -3.212737e+000, -6.947960e-001, 3.700054e+001, 2.747127e+001, 2.722617e+001, 2.503806e+001, -2.854533e+001, 1.061546e+001, -5.995474e+000, 2.471664e+001, 1.203042e+001, 1.821876e+000, -1.153315e+001, 1.380442e+001, -8.028508e-002},
{3.256377e+001, -6.450682e+000, -6.525008e+000, 1.501025e+001, -7.179535e+000, -8.897216e+000, -8.947036e+000, -3.758983e+001, 2.277567e+001, 2.945667e+001, 4.640035e+000, -3.016097e+001, 1.347000e+001, 1.533175e+001, 2.700843e+001, 3.139720e+000, -1.231817e+001, 1.112223e+001, -1.444929e+000, -2.896845e+001, -1.392930e+001, 2.432147e+001, 2.264221e+000, 7.732171e+000, -2.072168e+000, -6.974289e+000, 1.439696e+001, -6.703487e+000, 5.196004e-001, 2.749572e+001, 1.204874e+001, 8.356236e+000, -1.607294e+001, 7.021820e-001, -1.248567e+001, 4.451667e+000, 7.539504e+000, -5.579430e+000, 1.268986e+001, -5.386358e+000, -2.177093e+000, -1.820855e+001, 1.376145e+001, -9.960723e+000, 2.636719e+001, -2.229363e+001, -1.059814e+001, 8.800563e+000, -1.256646e+001, -6.283738e+001, 7.005510e+000, 1.336135e+001, 3.507221e+000, -8.265710e+000, 6.828949e-001, -1.899145e+001, -1.488458e+000, -1.326148e+001, -5.711916e+000, -8.039592e-001, 3.171074e+000, 2.453630e+000, -1.497013e+001, -1.404230e+001, -4.327611e-001, 3.507496e+000, 2.618422e+000, 7.829040e+000, -1.808063e+001, 2.997407e+001, -8.606112e+000, 5.340024e+000, -1.786302e+001, -4.132993e+000, 5.347697e+000, -1.728411e+000, -3.405430e+000, -1.515247e+001, 6.334132e+000, 2.066555e+000, -1.203400e+000, -1.738826e+001, -4.775637e+000, 7.390539e+000, -8.787407e+000, 1.488044e+001, -2.636993e+000, 2.107099e+001, 2.649850e+000, 1.039989e+000, 7.562436e+000, -1.901971e+000, 4.208541e+000, 1.537350e+001, 9.873881e-001, 2.885355e+001, -2.350684e+001, 7.843589e+000, 1.028452e+001, 1.036894e+001, -1.769219e+001, 1.305813e+001, -1.833927e+001, 8.282664e+000, 3.200783e+001, 2.332066e+000, -5.213819e+000, -2.750225e+001, -5.587584e+000, 4.152274e+001, 1.242700e+001, 3.192861e-001, -5.200442e+001, -4.315264e+000, 5.949560e+001, -1.146772e+001, -4.044167e+000, 3.285982e+001, -4.624432e+001, 2.656356e+001, -2.191771e+001, 1.432264e+001, -4.553291e-001, 1.994263e+000, -3.506042e+001, 4.208254e+001, 1.215406e+001, -2.988236e+001, -2.786700e+001, 4.564233e+000, -1.902744e+001, -1.212986e+001, -9.307117e+000, -1.885061e+001, -1.529065e+001, -1.464437e+001, -2.503015e+001, -9.614543e+000, 4.724187e+000, -2.373040e+001, 1.327355e+001, -8.499465e+000, 9.258440e+000, 2.185536e+001, 1.123979e+001, -1.994029e+001, 1.327497e+001, -2.451666e+001, 1.227029e+001, -1.219023e+001, -2.603529e+001, 3.252449e+000, -5.009591e+000, 9.643726e+000, 6.434986e+000, -6.863016e+000, 2.055759e+000, -1.649798e+001, -2.777529e+001, 1.749392e+001, -3.386501e-001, 2.207853e+001, -2.375570e+001, 2.744467e+000, -1.623192e+001, 1.662621e+001, 1.588004e+001, 5.098006e+000, 2.588663e+000, -5.250408e+000, 2.983276e+001, 1.307323e+001, -1.423687e+001, 1.119006e+001, -2.334656e+001, 2.028972e+001, 3.375927e+001, -6.686484e+000, 1.088439e+000, -2.523242e+001, 2.691421e+001, -2.061100e+001, -2.669318e+000, 3.827169e+000, 3.581655e+000, 9.899556e+000, 5.903492e+000, -1.293071e+001, 7.953611e+000, -1.376695e+001},
{1.026114e+000, 2.673904e+000, 1.761245e+001, -5.713489e+000, 7.595842e-002, -5.012459e+000, 2.747503e+001, -7.906631e+000, 1.709958e+001, -1.356766e+000, -6.425757e+000, -2.161934e+001, 3.372182e+001, -7.023425e+000, 4.817976e+000, 2.712830e+001, -1.462303e+001, -1.692775e+000, -1.100577e+001, -1.233892e+001, -3.723193e+001, 3.603949e+000, 1.590542e+001, -2.190917e+001, 1.968633e+001, -1.312040e+001, 1.180430e+001, 4.256325e+000, -8.462010e-001, -2.610674e+001, -1.562192e+001, 7.163372e+000, 1.329330e+001, -2.072631e+001, 1.814711e+000, 1.298659e+001, 1.117830e+001, -1.156726e+001, -3.866119e+001, -5.336501e+000, 1.624145e+001, 7.779062e+000, 1.411863e+001, 5.961768e+000, -2.180142e+001, 1.513882e+000, 1.776828e+000, -8.205616e+000, -1.047467e+001, -3.590480e+001, -7.814167e+000, -7.720328e-001, 1.397075e+001, 6.477879e+000, 1.886383e+001, -2.299863e+001, -4.225087e+000, 2.013087e+000, -2.721601e+000, 1.128263e+000, 8.768576e+000, -1.157038e+001, 1.399709e+001, 2.954790e+000, 2.083588e+001, 9.646350e+000, 9.019610e+000, 6.985285e+000, 1.306966e+001, -4.003751e+000, -1.070293e+001, 1.471041e+000, 1.127257e+001, -1.399449e+001, 2.189218e+000, -1.321750e+001, 1.388397e+001, -9.597290e+000, -1.340379e+001, -6.595950e+000, -


© ISO/IEC 2004 — All rights reserved

Copyright International Organization for Standardization
Provided by IHS under license with ISO
No reproduction or networking permitted without license from IHS
Not for Resale

7.654276e+000, 2.918679e+001, -1.259773e+001, 2.962969e+000, 1.113948e+001, -2.650539e+001, 2.134547e+000, -2.270463e+001, 1.047060e+001, 2.640243e+001, -8.526673e+000, -5.574094e+000, -1.626270e+001, 8.479080e+000, -2.025465e-001, 1.094393e+001, -8.653995e+000, 5.733047e+000, -1.724001e+001, -2.581559e+001, -1.658476e+000, 1.955245e+001, -6.372927e+000, -2.494947e+001, 3.067709e+001, -1.556916e+001, 1.064646e+001, -1.671762e+001, -2.730084e+001, -1.571352e+001, 2.328266e+001, 4.927188e+001, -1.456121e+001, -5.502895e+000, -5.392053e+000, 2.442451e+001, -7.201360e+000, -1.168883e+001, -1.983176e+001, -1.014147e+001, 6.277458e+001, -4.006630e+001, -2.225993e+001, 3.301226e+001, 1.170036e+001, 1.543288e+001, 1.783157e+001, -2.639169e+001, -1.242805e+001, 3.596246e+001, 1.578373e+001, -1.451008e+001, -1.642617e+001, 2.482860e+001, -2.453310e+001, 3.006548e+001, 1.109903e+001, -1.438465e+001, 6.651331e+000, -1.858380e+001, -1.207326e+001, -4.784922e+000, -1.692325e+001, 1.389338e+001, 1.060010e+001, 1.453781e+001, 5.144821e+000, 2.184427e+001, 2.655883e+000, -7.502230e+000, 7.151749e+000, -5.690296e+000, -7.890125e+000, -7.880898e+000, -2.968135e+000, 1.122056e+001, -8.548826e+000, 4.160780e+000, 8.093254e+000, -2.227152e+001, -1.276511e+001, 1.659691e+000, -2.986143e+001, -1.489412e+001, -9.949951e+000, 1.244985e+001, 2.176460e+001, 5.089003e+000, 2.327529e+001, 2.579481e+000, 1.017306e+001, 3.407232e+001, 1.380789e+001, -1.214712e+001, 5.743827e+000, -2.725961e+001, 1.123391e+001, -6.994323e+000, 1.383195e+001, -2.619492e+001, -1.809197e+001, -3.892688e+000, 1.109853e+001, 2.833640e+001, -7.245109e+000, 3.967248e+000, -2.244768e+001, 3.061644e+000, 2.759958e+000, 2.439545e+000},

{2.496701e+001, 1.706900e+001, 6.422587e+000, 1.787088e+000, 5.923080e+000, 1.569708e+001, 1.228744e+001, 2.971037e-001, -4.403599e+000, 3.431229e+001, 2.184178e-001, 5.656954e+000, -2.328909e+001, -1.173068e+001, 8.534463e+000, 3.970452e+000, -3.352558e+001, -1.497872e+001, 9.017501e-001, 6.731414e+000, -2.728203e+000, -1.620211e+001, 7.321321e+000, -1.609432e+000, -1.707057e+001, -3.230363e+000, 7.893341e+000, 4.590293e-001, -9.819587e+000, 3.173031e+001, 1.123011e+001, -7.014648e+000, 1.654247e+001, -2.815651e+001, -1.028875e+001, -1.879172e+001, -2.632957e+001, -1.615534e+001, -1.495743e+001, 9.935445e+000, -2.627979e+001, -2.348112e+001, -3.841672e+001, -1.016066e+001, 1.805659e+001, -7.243920e+000, 3.975132e+000, -3.421957e+001, -8.706351e+000, 9.905927e+000, 4.288552e+000, 2.500113e+001, -2.876560e+000, -9.321944e-001, 4.982966e+000, -1.444182e+001, -2.900797e+001, 1.190033e+001, -4.377700e+000, 1.785257e+000, 1.272625e+001, 1.522871e+001, -1.021208e+000, -2.361207e+000, -7.782473e+000, -8.624980e-001, 1.571088e+001, -2.082690e+001, 6.843652e+000, -8.637108e+000, 4.569578e+000, 2.685693e+000, -7.556977e-001, -3.338576e+000, -7.201545e+000, -9.399431e+000, -2.742432e+000, 9.353230e+000, 1.260521e+001, 1.284429e+001, -4.891401e-001, 4.907462e-001, -1.986789e+001, 3.165142e+000, -2.610666e-001, -1.155525e+001, -1.558515e+001, 7.308361e+000, -1.167281e+001, 4.349231e+000, -2.401238e+000, 1.074185e+001, 7.852749e+000, -1.252053e+001, -7.749880e+000, -1.166320e+001, -3.191712e+001, 4.566413e+000, -6.189667e+000, -3.564522e+001, -3.258993e+001, -5.038621e+000, -1.206829e+001, -2.464004e+001, -3.658722e+001, -4.422031e+001, -7.780850e-001, -1.560831e+001, -2.282766e+001, -3.387015e+000, -5.355778e+000, 2.488105e+001, 8.483815e+000, -2.071397e+001, -3.699336e+000, 2.528910e+001, 2.482652e+001, -1.540037e+001, -9.849310e-002, -4.955950e+001, 1.217131e+001, -2.950630e+001, -2.335616e+001, -1.696018e+001, -5.462162e+001, 1.152716e+001, -3.906508e+000, 1.829284e+001, 1.363946e+001, -4.400759e+000, 1.997094e+000, 4.056891e+001, 1.672893e+001, -1.036742e+001, -4.400017e+001, -1.893584e+001, -1.997201e+000, -8.352046e+000, -4.279375e+001, 5.183685e+000, 5.691408e+000, -3.374277e+001, 1.090221e+001, -5.140444e+000, 9.872901e+000, -1.107094e+001, -1.406365e+001, -3.917795e+000, -1.173977e+001, -4.839643e+000, -2.941023e+001, -1.514288e+001, -1.041192e+001, 7.828102e-001, -8.421459e+000, 2.917246e+000, -1.526249e+001, 6.519741e+000, -1.183714e+001, -6.390268e+000, 1.511978e+001, 2.476034e+000, 1.084356e+001, 3.143607e+001, 1.436454e+000, 6.866479e+000, 1.477833e+001, -1.277396e+001, 1.679601e+001, -1.192693e+001, -3.347573e-001, 2.663580e+001, 3.965060e+000, -5.749681e-001, 1.787635e+000, 3.402658e+001, 1.952396e+001, 2.674364e+001, -2.579345e-001, 7.128286e+000, -7.754513e+000, 3.042523e+000, 4.308758e+000, -9.678373e+000, 2.575362e+000, -2.098813e+001, -3.323720e+000, -1.086834e+000, 1.232982e+000, -9.550845e+000},

{-6.379184e-001, -3.697370e+001, 2.938250e+001, -1.050919e+001, -2.050952e+001, -1.403491e+001, -2.332132e+001, -3.116936e+001, 8.397115e+000, -1.195986e+001, 2.127445e+001, 1.473686e+001, 1.318574e+001, -5.734817e+000, -1.633296e+001, 7.339394e+000, -1.722551e+001, 1.607054e+001, 7.321835e+000, 3.195407e+001, -5.197194e+000, -1.977706e+001, 1.015972e+001, -2.633535e+001, 1.983278e+001, 5.678621e+000, 2.164435e+000, 5.726749e+000, -2.714266e+001, -1.289526e+001, 1.470184e+001, -3.029512e+001, -7.088920e+000, 2.944061e-002, -6.087063e+000, 1.478866e+001, -

© ISO/IEC 2004 — All rights reserved


Copyright International Organization for Standardization
Provided by IHS under license with ISO
No reproduction or networking permitted without license from IHS
Not for Resale

1.533252e+001, -7.656086e+000, -3.683019e+000, 1.619099e+001, -5.902970e+000, -1.482136e+001, -1.972811e+001, -
2.263690e+001, 2.023709e+001, 2.333750e+001, -1.506631e+001, -1.694500e+001, -9.259043e+000, -2.380980e+001,
4.616877e+000, 7.871049e+000, -1.152880e+001, -1.670978e+001, -1.412241e+001, 1.852406e+001, 1.091764e+001,
6.595213e+000, 3.817542e+000, 1.666802e+001, -1.614206e+001, 1.532324e+001, -7.874742e+000, 2.146421e+001, 2.393453e+001,
-1.376429e+001, 3.433226e+000, 1.096166e+001, -3.994006e+000, 1.048303e+001, 6.121305e+000, 1.908803e+001, 2.508998e+001,
-2.324741e+001, 1.169759e+001, -6.413666e+000, 1.304268e+000, -7.786395e+000, -1.464942e+001, 6.229587e+000,
1.135502e+001, 7.943782e+000, -2.082395e+001, 4.549409e+000, -9.959773e+000, 4.172544e+000, -2.235010e+001, -
3.268829e+001, -6.767110e+000, -6.282064e+000, 1.251922e+001, 8.532113e+000, 1.149689e+001, 1.575176e+001, 1.057310e+001,
-1.812511e+001, -1.665037e+000, -2.480995e+001, 5.243117e-001, 1.774191e+001, -3.749438e+000, 2.593340e+000,
3.104718e+000, -1.947751e+001, 3.552274e+000, 1.746116e+001, -2.874769e+001, -3.281268e+001, -3.374004e+001,
1.573916e+001, -5.522990e+000, -5.329271e+000, 3.037493e+001, 2.476982e+001, 2.526959e+001, -1.924904e+001, -
8.811378e+000, 4.073424e+001, -1.371591e+001, -8.038164e+000, -9.853376e+000, -5.481006e+001, 1.452043e+001, -
2.747151e+001, 1.929102e+001, -1.877158e+001, -3.021182e+001, -3.195178e+001, 6.701387e+000, -7.185722e+000,
2.755305e+001, -2.359171e+001, 4.200247e+001, 5.144649e+001, 3.282605e+001, -1.638451e+001, 2.341716e+000, -
1.578793e+001, -8.901086e+000, 3.932362e+000, -2.633705e+001, 6.173289e+000, 1.458335e+001, -2.233422e+001,
1.432627e+001, 3.914266e+000, 1.493918e+000, 3.710617e+000, -2.580392e+001, -2.198153e+001, -5.293366e+000,
1.484975e+001, -4.744133e+000, -1.562758e+001, 3.211144e+001, 7.738916e+000, 3.592949e+000, 2.279887e+000, 2.496074e+000,
-3.493927e+000, 1.239931e+001, 6.897936e+000, -5.408222e-001, -8.753917e+000, -5.787402e+000, 3.590464e+000,
1.568257e+001, 2.855703e+000, 9.984359e+000, 5.203161e+000, -8.582882e+000, 2.056603e+001, -4.736076e+000, -
8.055430e+000, 2.030343e+001, -2.164257e+001, 4.231399e-001, 1.877980e+001, 1.889939e+001, -2.092940e+000, 3.780929e+001,
-3.809807e+000, 1.850483e+001, -1.791687e+001, -2.391142e+001, -1.347490e+001, 2.062540e+000, 8.079146e+000, -
5.754174e+000, -1.622428e+001},
{4.265925e+001, 2.168648e+001, 3.934510e+000, 2.440227e+000, -1.697528e+000, 2.891546e+001, 4.088954e-001, 1.785197e+001,
9.242018e+000, -3.211159e+001, 7.188406e-001, -1.618239e+001, -9.188606e+000, 9.646743e+000, -3.066157e+001,
2.872242e+001, -1.576301e+001, -5.990340e+000, -2.112374e+001, -5.517753e+000, 2.401462e+001, 5.724696e+000, -
6.185470e+000, -6.246511e+000, 2.105266e+001, -1.573524e+001, -6.725401e-001, 2.177361e+001, -1.090001e+001,
2.196886e+001, 1.012432e+001, 4.882865e+000, 3.756804e+001, -4.052641e+001, 1.879748e+001, 5.504692e+000, -1.562813e+001,
2.353202e+001, 7.466894e+000, -1.103923e+001, 1.060208e+001, 1.103389e+001, -4.576235e+000, 1.760103e+001, -
7.373797e+000, -1.714378e+001, -4.415771e+001, 5.207322e+000, 6.069302e+000, -3.248451e+001, -1.112308e+001, -
8.034912e+000, -3.482485e+001, -3.705323e+000, 9.708722e+000, -6.998231e-001, 7.117017e+000, 2.508244e+000, 8.523672e+000,
-7.795560e+000, 5.818416e+000, 2.542027e+000, -1.349221e+000, 2.548087e+000, 1.204046e+001, 7.636670e+000, 6.804958e+000,
-9.764505e+000, 2.930400e+000, 6.275986e-002, -3.040172e+001, -8.264398e+000, 3.173116e-001, -5.126308e+000, -
1.632165e+000, 6.444258e+000, -6.811170e+000, -1.899371e+001, -3.331798e-001, 1.327403e+001, -1.080248e+001, -
4.277350e+000, -1.209129e+001, -7.171541e+000, -1.851013e+000, 2.459136e+001, 2.101698e+001, 1.049169e+001, -
3.120432e+001, 4.670890e+000, -3.614052e+001, -1.070879e+001, 2.032646e+001, -1.409929e+001, -7.199271e+000, -
8.486758e+000, 4.816230e+000, 2.315003e+001, 9.478685e+000, 1.731760e+000, 1.085575e+001, -2.697257e+001, -3.442452e-001,
-2.968743e+000, 3.088990e+001, 1.138111e+001, 8.540663e+000, -7.992980e+000, -1.202735e+001, -4.089623e+000, -
4.047407e+001, 1.407068e+001, 5.211332e+000, -6.148943e+001, -1.516539e+001, -3.682844e+000, 1.528237e+001,
1.975895e+001, 3.687870e+001, -6.228042e+001, 8.569190e+000, 3.024866e+001, 3.492925e+001, -2.000215e+001, 2.427461e+001,
1.722261e+001, -1.704414e+001, -1.075248e+001, 5.294603e+000, 1.665645e+000, -2.041592e+001, -2.559237e+001,
1.355470e+001, 5.004513e+001, 2.451830e+000, 1.709262e+000, -2.141207e+000, 2.483827e-002, -8.913481e+000, -1.896610e+001,
-1.658841e+001, 6.263323e+000, -1.292460e+001, -1.482229e+000, 8.000679e+000, -5.688637e+000, 2.033338e+001, -
1.161608e+000, 2.288670e+001, -1.657987e+001, -1.774496e+001, -9.194591e+000, -3.261713e+000, -7.475673e-001, -
1.802695e+001, 8.808329e+000, 8.343169e-001, 1.858203e+001, 2.292953e+001, -1.305161e+001, 8.278868e-001, 8.467208e+000, -
1.249689e+000, -1.682638e+001, 3.620790e+001, -9.240630e+000, -5.637474e+000, -2.985150e+001, -8.381718e+000, -
1.530257e+000, -6.271185e+000, -2.125678e+001, 4.351265e+000, 7.343990e+000, -2.159643e+001, -2.445642e+001, -
9.063500e+000, 4.225421e-002, -1.992536e+001, -6.259720e+000, 7.478933e+000, -2.506897e+001, -1.708221e+001, -
7.751047e+000, 1.366622e+001, -1.274307e+000, 8.219351e-001, -1.657001e+000, 1.339930e+001, 2.022710e+001}


© ISO/IEC 2004 — All rights reserved

Copyright International Organization for Standardization
Provided by IHS under license with ISO
No reproduction or networking permitted without license from IHS
Not for Resale

};

PCLDA basis matrix $\Psi_l^c$ [40][783]={

{-1.298659e-001, -1.318938e-002, 3.612973e-002, 1.053900e-002, -7.620617e-003, -6.326074e-003, 1.791321e-003, 1.220703e-002, 1.193103e-002, 2.650421e-003, -6.695457e-003, -1.265412e-002, -2.034431e-002, -2.172901e-002, -1.963638e-002, -4.654224e-003, 1.004991e-002, 1.999124e-002, 2.203102e-002, 1.987778e-002, 1.672362e-002, 5.139226e-003, 3.035383e-003, 4.137429e-003, 6.398752e-003, 2.884168e-002, 4.494239e-002, -5.408845e-003, -8.649450e-002, -6.228742e-002, 1.031708e-002, -1.935003e-002, -4.585075e-002, -3.150682e-002, -1.406737e-002, -9.799991e-003, -6.173737e-003, -1.205131e-002, -5.886586e-003, -5.402638e-003, -5.527269e-003, -8.201342e-003, -1.095121e-002, -1.139625e-002, -3.183462e-003, 7.650600e-003, 1.635547e-002, 1.849150e-002, 8.401270e-003, 9.412100e-003, 8.076694e-004, -1.182356e-003, -6.462083e-003, -2.101890e-002, -1.212048e-002, 5.900458e-003, 2.606489e-003, -6.617110e-002, -1.448115e-002, -1.294828e-002, -3.799188e-002, -2.194170e-002, -8.888291e-004, 5.749646e-003, 1.957845e-003, -3.665949e-003, -4.224340e-003, 1.017481e-002, 1.540484e-002, 5.207385e-003, -9.946112e-003, -1.798878e-002, -2.278547e-002, -1.658180e-002, -4.743822e-003, 1.132889e-002, 1.650769e-002, 1.193794e-002, 7.426988e-003, 5.737015e-003, 4.475812e-003, 3.929768e-003, -1.713990e-002, -2.786207e-002, -2.241464e-002, -6.416241e-003, -3.958224e-002, -1.500030e-002, -1.846514e-002, -1.188962e-002, 1.210815e-002, 1.144647e-002, 1.870608e-002, 4.835898e-003, -2.323928e-003, -1.398394e-003, 6.413025e-004, -1.616983e-003, -1.286721e-002, -2.541120e-002, -3.381999e-002, -3.354832e-002, -2.134977e-002, -8.795100e-003, 6.346955e-003, 1.554628e-002, 2.411575e-002, 2.059532e-002, 1.240846e-002, -1.589076e-003, -5.202970e-003, -1.030691e-002, -2.006528e-002, -2.092440e-002, -9.313431e-003, -2.829637e-002, -1.727468e-003, -1.694633e-003, 9.000066e-003, 9.458823e-003, 1.003577e-002, 1.936228e-002, 8.385147e-004, -1.381248e-002, -1.364396e-002, -1.018178e-002, -1.227752e-002, -1.832929e-002, -1.952172e-002, -2.388791e-002, -1.526933e-002, 1.236150e-004, 1.859443e-002, 2.955920e-002, 3.949386e-002, 5.225694e-002, 5.282864e-002, 3.300532e-002, 9.536082e-003, -2.758794e-003, -9.737210e-003, -1.702188e-002, -1.523818e-002, 1.061280e-003, -1.171209e-002, 1.517237e-002, 6.367259e-003, -1.123894e-002, -1.508194e-002, 5.825420e-003, 1.410425e-002, -3.427650e-003, -1.465682e-002, -1.639055e-002, -2.117364e-002, -2.192327e-002, -1.527015e-002, -2.182704e-002, -1.606958e-002, -2.570466e-003, 1.429200e-002, 2.274933e-002, 2.920356e-002, 3.573274e-002, 4.832478e-002, 4.959047e-002, 3.401252e-002, 9.472111e-003, -1.533964e-002, -1.973172e-002, -2.119851e-002, -1.677066e-002, 6.740855e-003, 1.327169e-002, 1.184682e-002, -1.903155e-002, -4.573385e-002, -2.793339e-002, 1.209348e-002, 1.730388e-002, 9.828575e-004, -1.142384e-002, -1.647211e-002, -2.677842e-002, -3.255348e-002, -2.816730e-002, -2.872930e-002, -1.461548e-002, 2.784826e-003, 7.973255e-003, -3.141774e-003, -1.387773e-002, -2.033491e-002, -1.179574e-002, -3.468159e-003, -1.595240e-003, -1.707994e-002, -4.001680e-002, -4.050430e-002, -2.742372e-002, -2.369490e-002, -6.784474e-003, 2.910746e-002, -3.474297e-003, -4.500529e-002, -6.206342e-002, -2.619901e-002, 6.962715e-003, 7.837763e-003, -6.494393e-003, -9.239149e-003, -1.238412e-002, -2.776548e-002, -4.443638e-002, -4.743156e-002, -4.134905e-002, -1.802051e-002, 2.966552e-003, 4.064447e-003, -1.807287e-002, -4.632678e-002, -6.784024e-002, -7.164745e-002, -5.641647e-002, -3.906825e-002, -4.372203e-002, -6.219931e-002, -6.010813e-002, -3.252310e-002, -2.106238e-002, -2.396413e-002, 1.508293e-002, -8.029471e-003, -4.888964e-002, -4.948457e-002, -2.053948e-002, -8.364679e-003, -1.322955e-002, -1.876968e-002, -1.376328e-002, -1.419969e-002, -2.854243e-002, -4.958596e-002, -5.578636e-002, -4.017863e-002, -6.243454e-003, 2.123817e-002, 2.662125e-002, -7.060225e-004, -3.722474e-002, -6.626930e-002, -7.633486e-002, -6.898621e-002, -4.831400e-002, -4.303060e-002, -5.334644e-002, -6.069649e-002, -3.240702e-002, -2.705863e-003, -2.308824e-002, -1.806936e-002, 1.918893e-004, -2.925202e-002, -2.396238e-002, -2.009638e-002, -2.636302e-002, -3.647533e-002, -3.306683e-002, -2.488408e-002, -1.897503e-002, -2.780829e-002, -5.174426e-002, -6.062002e-002, -4.274085e-002, -3.876633e-003, 3.420645e-002, 5.487610e-002, 3.999669e-002, 4.802812e-004, -2.516722e-002, -3.558603e-002, -3.404995e-002, -2.109268e-002, -1.848476e-002, -3.278391e-002, -4.964690e-002, -2.569188e-002, 1.776655e-002, -3.318962e-003, -3.386034e-002, 2.854679e-002, 9.233321e-003, -2.984933e-003, -2.586744e-002, -4.507954e-002, -5.113361e-002, -3.740163e-002, -1.753351e-002, -1.185716e-002, -1.977342e-002, -4.417695e-002, -6.187293e-002, -4.623891e-002, -1.237536e-002, 2.151862e-002, 4.375120e-002, 4.565134e-002, 2.711383e-002, 8.383183e-003, 7.722168e-003, 1.114041e-002, 1.609156e-002, 7.818709e-003, -1.393150e-002, -2.677646e-002, -1.511601e-002, 3.688365e-002, 2.699073e-002, -2.640600e-002, 4.863812e-002, 2.374641e-002, -1.806367e-002, -5.563399e-002, -7.022967e-002, -5.939330e-002, -2.677136e-002, 5.499802e-003, 1.968873e-002, 6.415570e-003, -1.683140e-002, -4.289845e-002, -4.440159e-002, -2.287054e-002, 1.847572e-003, 1.590567e-002, 1.945597e-002, 1.222462e-002, 1.182987e-002, 2.063000e-002, 2.726173e-002, 3.372276e-002, 2.637778e-002, 3.631303e-003, -1.631403e-002, -1.195227e-002, 3.620691e-002, 4.290044e-002, -1.437699e-002, 3.250821e-002, -1.246697e-002, -6.695512e-002, -9.399738e-002, -8.539703e-002, -5.499857e-002, -5.267444e-003, 3.101459e-002, 5.262910e-002, 4.761205e-002, 1.851045e-002, -1.496231e-002, -3.410327e-002, -3.287677e-002, -2.171587e-002, -2.062392e-002, -1.950368e-002, -2.041252e-002, -1.884520e-002, -4.254147e-003,

© ISO/IEC 2004 — All rights reserved



Copyright International Organization for Standardization
Provided by IHS under license with ISO
No reproduction or networking permitted without license from IHS
Not for Resale

6.789959e-003, 1.512674e-002, 6.139197e-003, -2.037850e-002, -5.125880e-002, -5.533009e-002, -2.593833e-003, 2.261561e-002, -1.676797e-002, -7.504729e-004, -6.306156e-002, -9.248536e-002, -7.667200e-002, -4.664850e-002, -1.736237e-002, 1.110322e-002, 2.454845e-002, 3.282656e-002, 4.197813e-002, 2.708453e-002, 4.859652e-003, -1.202006e-002, -2.181143e-002, -2.935791e-002, -3.828614e-002, -4.512693e-002, -5.137717e-002, -4.542279e-002, -2.936315e-002, -1.470692e-002, -1.293827e-003, -7.796817e-003, -2.652723e-002, -7.037886e-002, -1.032261e-001, -7.256713e-002, -2.942082e-002, -2.706253e-002, -3.068178e-002, -6.412219e-002, -3.884704e-002, -8.209993e-004, 9.852087e-003, -1.597106e-003, -2.143064e-002, -3.446457e-002, -3.888007e-002, -2.052516e-002, -4.642566e-004, 1.779759e-002, 2.108405e-002, 9.923641e-003, -3.746908e-003, -1.883999e-002, -2.787176e-002, -3.919298e-002, -2.652431e-002, -9.362661e-003, 4.633387e-003, 1.602378e-002, 1.628207e-002, 4.274620e-003, -3.402673e-002, -8.554198e-002, -9.336390e-002, -5.930317e-002, -2.857048e-002, -3.133976e-002, -3.083615e-002, 1.395150e-002, 7.840456e-003, -1.390401e-002, -2.770585e-002, -2.678349e-002, -1.852391e-002, -1.822950e-002, -2.312688e-002, -9.751013e-003, 3.781964e-002, 6.778239e-002, 6.482365e-002, 4.056856e-002, 1.747617e-002, 8.810170e-003, -6.405301e-003, 3.621502e-003, 1.545809e-002, 1.123799e-002, -3.588323e-003, -1.278115e-002, -5.710240e-003, 6.254856e-003, -1.587245e-002, -4.600301e-002, -5.392184e-002, -1.411666e-002, -2.107360e-002, -8.134430e-003, 1.345255e-002, 3.670031e-003, -2.106537e-002, -4.273377e-002, -3.462348e-002, 2.720106e-003, 1.821813e-002, 1.190405e-002, -3.219065e-003, 3.124925e-002, 7.561154e-002, 8.248950e-002, 6.143883e-002, 2.934885e-002, -1.715652e-003, -2.407011e-002, -2.801855e-002, -2.611422e-002, -2.649349e-002, -2.724116e-002, -1.926353e-002, 1.061790e-002, 4.943739e-002, 5.103094e-002, 4.958988e-003, -3.436087e-002, 6.670369e-003, 1.966940e-003, 1.797832e-002, 4.918790e-002, 3.518245e-002, 2.320604e-002, -2.518057e-003, -9.916631e-003, -9.890024e-003, -2.219797e-002, -1.965210e-002, -8.036836e-003, 1.241696e-002, 3.694916e-002, 3.863672e-002, 3.134012e-002, 1.966707e-002, 6.087711e-003, 1.268221e-003, -1.414619e-002, -1.394569e-002, -8.886064e-003, 9.900851e-004, 1.372550e-002, 2.522745e-002, 6.436059e-002, 1.057645e-001, 7.910343e-002, -4.322127e-003, 8.162356e-003, 3.792497e-003, 2.740618e-002, 1.896963e-002, -3.479602e-002, -3.055670e-002, 1.678595e-002, 4.469226e-002, 3.125209e-002, -2.461615e-002, -6.313977e-002, -1.523261e-002, 5.669123e-002, 1.273279e-002, -2.065600e-002, -6.698002e-003, 2.404703e-002, 5.498684e-002, 6.710188e-002, 1.308777e-002, -1.386964e-002, 3.484964e-002, 6.166836e-002, 2.226062e-002, -3.592950e-002, -4.145214e-002, 7.222937e-003, 6.298662e-002, 2.305509e-002, -1.327344e-002, 1.386056e-003, 7.239403e-004, -4.877836e-002, -1.262752e-001, -8.388503e-002, -2.285973e-002, 4.168239e-002, 4.124934e-002, 8.616014e-003, -3.186416e-002, 1.449755e-002, 1.121760e-001, 3.872998e-002, 1.496783e-002, 2.873449e-002, 5.736363e-002, 8.466777e-002, 9.292386e-002, 1.570264e-002, -6.857437e-002, -4.131685e-004, 6.097831e-002, 8.507082e-003, -7.562693e-002, -8.441008e-002, -8.949473e-002, -4.937034e-003, 3.539077e-002, 8.457045e-004, 5.670341e-002, 3.959631e-002, -4.092584e-003, 7.611952e-003, 6.978205e-002, -3.066453e-002, -8.756984e-002, 2.145706e-003, 5.414098e-002, 1.862527e-002, 4.436399e-002, 8.288833e-002, 1.458360e-002, 4.484713e-002, 6.741474e-002, 4.744323e-002, 1.815239e-002, 5.358459e-002, 5.072104e-002, -8.787508e-003, -1.373606e-002, -6.861030e-002, -1.414758e-001, -8.259872e-002, 4.198285e-002, 9.853190e-003, 1.627009e-002, 5.032952e-002, 3.806286e-002, 2.459200e-002, 2.426352e-002, 2.062552e-002, 2.848459e-002, 1.715832e-002, -3.658184e-002, -8.205661e-002, -2.252869e-002, 1.756240e-002, 1.709290e-002, 2.553678e-002, 4.643463e-003, -2.281069e-002, 3.654883e-002, 5.235363e-002, 3.885940e-002, -2.476163e-002, 8.675153e-003, 8.274670e-002, 7.668883e-002, 2.423351e-002, -6.903502e-002, -1.160522e-001, -5.979980e-002, 2.089944e-002, 5.259634e-002, 4.381681e-002, 5.085808e-002, 2.808814e-002, -2.078221e-002, -1.570116e-002, -1.765362e-002, -1.049070e-003, 3.270176e-002, 4.802066e-002, 6.196559e-002, 6.699890e-002, 4.607274e-002, 5.557837e-003, -7.129565e-003, -3.476745e-002, -2.666506e-002, 2.392574e-002, 2.534340e-002, 2.646382e-002, -2.702688e-002, -5.191551e-002, 4.155090e-002, 1.024423e-001, 1.036979e-001, 8.258082e-002, 5.409827e-002, 3.241706e-002, 1.574341e-002, -1.602162e-003, -8.935711e-003, 3.996145e-003, -5.048708e-003, -3.661299e-002, -1.663168e-002, -2.776843e-002, -2.937880e-002, -4.056306e-003, 1.786230e-002, 3.031465e-002, 2.375940e-002, 7.122434e-004, -2.193092e-002, -2.184052e-002, -3.381203e-002, -2.298828e-002, 3.813448e-004, -2.385798e-003, 1.380472e-003, -4.745669e-003, -5.273491e-002, -2.813905e-002, 3.247527e-002, 5.393667e-002, 4.694311e-002, 2.633977e-002, -4.629177e-004, -2.524635e-002, -3.589064e-002, -2.811598e-002, -2.133114e-002, -2.542079e-002, -4.482021e-002, 6.685343e-003, 1.771771e-002, -1.086536e-006, 3.216864e-003, 1.816656e-002, 2.005878e-002, 2.030438e-002, 1.261201e-002, 8.413373e-003, 7.225583e-003, -1.065383e-003, -1.895896e-002, -1.929097e-002, -1.932744e-002, -2.244618e-002, 5.804116e-003, 3.859408e-003, -3.041951e-002, 3.199234e-003, 2.607597e-002, 2.623455e-002, 1.308669e-002, -6.641017e-003, -2.420349e-002, -2.548683e-002, -2.060649e-002, -2.007086e-002, -2.753007e-002, -2.875717e-002, 3.778676e-002, 5.891282e-002, 4.713123e-002, 4.753438e-002, 5.406206e-002, 4.992868e-002, 4.789017e-002, 5.123414e-002, 5.322257e-002, 5.690112e-002, 2.796578e-002, 1.539583e-003, 1.409091e-003, 1.655920e-003, -1.484577e-002, 4.142231e-003, 4.824782e-002, 2.793076e-002, 9.724996e-003, 2.359007e-002, 2.446905e-002, 1.572693e-002, 7.296587e-003, 7.256280e-003, 1.059939e-002, 8.303651e-003,


© ISO/IEC 2004 — All rights reserved

Copyright International Organization for Standardization
Provided by IHS under license with ISO
No reproduction or networking permitted without license from IHS
Not for Resale

5.362603e-003, -4.096889e-003, -2.180433e-002, 5.156633e-002, 8.345941e-002, 7.280022e-002, 6.088404e-002, 5.265311e-002, 4.789115e-002, 5.155651e-002, 5.957229e-002, 7.826748e-002, 9.566263e-002, 7.404836e-002, 6.497561e-002, 8.068817e-002, 8.094488e-002, 4.519971e-002, 2.609272e-002, 5.824774e-002, 8.573153e-002, 6.010208e-002, 2.957618e-002, 2.448500e-002, 2.629979e-002, 2.673529e-002, 3.815254e-002, 4.839152e-002, 3.721835e-002, 3.575792e-002, 1.568973e-002},
{6.878675e-002, 3.464024e-003, 7.343057e-003, 3.844186e-002, 1.324225e-002, -2.236524e-002, -2.634350e-002, -2.517245e-002, -2.046187e-002, -2.681697e-002, -3.870025e-002, -4.632812e-002, -4.201919e-002, -2.056536e-002, 1.186419e-002, 3.537946e-002, 3.913690e-002, 1.909683e-002, -7.927298e-004, -2.661063e-002, -3.253849e-002, -2.360618e-002, -1.332312e-002, 2.847638e-003, 2.945483e-002, 8.466608e-003, -3.197962e-002, -8.897154e-003, 1.195194e-001, -2.478697e-002, -2.709886e-002, 1.310633e-002, 8.863288e-003, -2.095548e-002, -3.228134e-002, -8.642571e-003, -5.418322e-003, -1.149451e-002, -3.429667e-002, -5.044290e-002, -6.227259e-002, -5.949460e-002, -3.841770e-002, -2.798926e-003, 1.508483e-002, 9.216468e-003, -1.268744e-002, -3.365910e-002, -4.494633e-002, -5.169071e-002, -4.150411e-002, -2.701569e-002, -2.044022e-002, -1.642297e-002, -2.432376e-003, -2.103040e-002, -5.314443e-002, 1.036754e-003, -2.409626e-002, 8.553202e-003, 1.745925e-002, -2.480896e-003, -1.490846e-002, -1.724152e-003, 1.941657e-002, 1.660827e-002, 9.762028e-003, 1.529217e-003, -1.495403e-002, -3.057523e-002, -3.239930e-002, -1.612087e-002, 1.707802e-002, 2.313620e-002, 7.716793e-003, -2.035944e-002, -3.465827e-002, -3.353182e-002, -3.238327e-002, -2.742160e-002, -4.979214e-003, 1.749324e-002, -9.207865e-003, -1.575514e-002, -9.675111e-003, -9.684505e-003, -1.183092e-002, -6.252716e-003, 1.641910e-002, 1.061334e-002, -6.634002e-003, -5.037936e-003, 1.847930e-003, 1.124322e-002, 1.753588e-002, 1.680955e-002, 1.579136e-002, -9.427065e-003, -3.154381e-002, -3.697612e-002, -1.746051e-002, 9.925198e-003, 1.330666e-002, 6.222632e-003, -1.845076e-002, -2.531521e-002, -2.450582e-002, -2.083227e-002, -1.254910e-002, 6.578782e-003, 2.686900e-002, 1.976077e-002, -4.921906e-003, -2.279883e-002, 7.882519e-003, 2.635825e-002, 5.729692e-003, 1.796543e-002, 1.165664e-002, 5.215090e-003, 8.717014e-004, -4.872622e-003, -9.448439e-003, -2.424618e-003, 3.609552e-003, 3.754963e-003, -1.928167e-002, -4.724696e-002, -5.662625e-002, -4.004164e-002, -1.555610e-002, -5.608327e-003, -5.962843e-003, -1.495739e-002, -2.310201e-002, -1.960013e-002, -1.358506e-002, -6.295090e-004, 9.305687e-003, 1.579269e-002, 1.846682e-002, 1.219343e-002, -7.116891e-003, -5.879464e-003, 4.251509e-002, 5.418820e-003, 9.658835e-003, 1.476343e-002, 2.182401e-002, 1.695946e-002, -6.349445e-003, -1.653223e-002, 1.701865e-003, 1.889299e-002, 2.848668e-002, 6.425236e-003, -1.915420e-002, -4.053298e-002, -3.799395e-002, -2.762146e-002, -2.368047e-002, -2.124209e-002, -2.055449e-002, -1.965995e-002, -9.173491e-003, -3.452353e-003, 7.754675e-003, 1.813714e-002, 1.095312e-002, 1.690252e-003, 1.500083e-002, 1.425871e-002, 1.163078e-002, 2.224233e-002, 7.904861e-003, 1.159421e-002, 2.851358e-002, 3.794636e-002, 2.017232e-002, -3.137235e-003, -1.062900e-002, 1.106010e-002, 3.833361e-002, 5.401704e-002, 3.953772e-002, 1.716929e-002, -8.820771e-003, -1.333505e-002, -2.205868e-002, -2.404317e-002, -2.618837e-002, -2.859360e-002, -1.223611e-002, -1.834966e-003, -3.473245e-003, 3.589755e-003, 1.464245e-002, 1.360804e-002, -4.478991e-003, 1.036963e-003, 1.877852e-002, 1.939519e-002, 1.614518e-002, 1.114590e-002, 1.487029e-002, 3.003774e-002, 2.420225e-002, 1.331039e-002, -7.527302e-003, -1.780450e-002, 7.238512e-003, 4.107907e-002, 5.785530e-002, 4.443306e-002, 2.291151e-002, 2.782447e-003, -4.072423e-003, -1.697347e-002, -2.477120e-002, -2.359265e-002, -2.234773e-002, -9.196246e-003, -2.538010e-003, -1.516602e-002, -1.775917e-002, -1.518992e-003, 1.564907e-002, 1.140101e-002, 3.185205e-003, 2.036515e-002, 1.808630e-002, 5.985752e-003, 6.033320e-003, 9.539150e-003, 9.144694e-003, 1.632178e-002, 1.695481e-002, -1.337893e-002, -2.574783e-002, -5.976162e-003, 1.518522e-002, 3.084198e-002, 2.634496e-002, 8.832275e-003, -5.273979e-004, 2.526430e-003, -5.726421e-003, -8.801465e-003, -1.555520e-003, -2.533228e-003, 2.719876e-003, 3.584702e-004, -2.180527e-002, -3.344697e-002, -1.711536e-002, 1.099075e-002, 2.745237e-002, 1.941437e-002, 2.025846e-002, 1.887623e-002, -2.138910e-003, -8.895047e-003, -2.073908e-002, -6.852339e-003, 2.186586e-002, 1.941088e-002, -1.247401e-002, -2.181627e-002, -1.302233e-002, -6.753039e-003, 7.880955e-004, -7.948822e-004, -1.014225e-002, -3.521666e-003, 6.072773e-003, 4.497652e-003, 7.794423e-003, 1.599449e-002, 1.822808e-002, 2.115987e-002, 1.434768e-002, -1.054271e-002, -2.690631e-002, -1.591790e-002, 9.873461e-003, 3.811337e-002, 2.948228e-002, 3.116469e-003, -3.830853e-003, -1.020731e-002, -3.769568e-002, -4.273099e-002, -2.617771e-003, 3.690543e-002, 2.647704e-002, -4.421070e-003, -1.434358e-002, -1.194612e-002, -1.285506e-002, -1.454184e-002, -1.676216e-002, -1.287160e-002, -6.470667e-004, 5.316711e-003, 6.941916e-003, 1.020797e-002, 2.197795e-002, 2.441348e-002, 2.304768e-002, 1.829274e-002, 1.271326e-003, -1.338174e-002, -1.531419e-002, 3.394362e-003, 3.761323e-002, 3.432603e-002, -1.418654e-002, -3.621165e-002, -2.649970e-002, -5.296956e-002, -3.019349e-002, 2.437773e-002, 4.634206e-002, 2.839430e-002, 1.644325e-003, -2.792702e-003, 8.660237e-003, 3.362012e-003, 6.653787e-005, -1.342213e-003, 2.776677e-003, 1.805818e-002, 1.843897e-002, 1.250618e-002, 1.190174e-002, 2.420846e-002, 2.160438e-002, 1.536522e-002, 1.245514e-002, 3.245371e-003, -6.307571e-003, -1.733555e-002, -1.596840e-002, 1.618590e-002, 3.229442e-002, -1.630847e-002, -4.660269e-002, -4.380305e-002, -4.857819e-002, -1.483789e-003, 4.074139e-002, 3.178536e-002,

© ISO/IEC 2004 — All rights reserved


Copyright International Organization for Standardization
Provided by IHS under license with ISO
No reproduction or networking permitted without license from IHS
Not for Resale

3.883565e-003, -1.138330e-002, 9.129314e-004, 1.509264e-002, 1.809120e-002, 2.045287e-002, 1.496399e-002, 1.759066e-002, 2.675160e-002, 2.592635e-002, 2.212475e-002, 2.250546e-002, 2.563826e-002, 1.640393e-002, 8.900413e-003, 6.689309e-003, -1.522127e-003, -1.557900e-002, -3.143200e-002, -3.330495e-002, -5.865141e-003, 2.724259e-002, -8.518830e-003, -4.061029e-002, -3.524391e-002, -1.848445e-002, 1.792724e-002, 1.476880e-002, -2.708367e-002, -5.861188e-002, -4.516599e-002, -2.702150e-002, -2.219174e-002, -2.488895e-002, -2.072671e-002, -1.636860e-002, 2.926729e-003, 1.746292e-002, 2.774289e-002, 3.229651e-002, 3.528349e-002, 2.809499e-002, 8.612833e-003, -2.725298e-003, -2.151558e-002, -2.983367e-002, -2.709166e-002, -2.376956e-002, -1.547368e-002, 9.005564e-004, 3.079468e-002, 1.450592e-002, -1.689111e-002, -1.256868e-002, -9.977139e-004, 6.304590e-003, -1.429966e-002, -5.614549e-002, -5.977922e-002, -3.049685e-002, -2.863492e-003, -5.031612e-004, -2.306153e-002, -5.227985e-002, -6.585048e-002, -3.818616e-002, -1.068680e-003, 3.075913e-002, 4.477076e-002, 4.867360e-002, 2.394584e-002, -2.000209e-002, -3.720205e-002, -4.173452e-002, -2.718378e-002, 5.038113e-003, 2.275028e-002, 9.148340e-003, 2.492775e-003, 2.366076e-002, 2.922782e-002, -5.724513e-003, 6.331242e-003, -1.061570e-002, -2.322109e-003, 4.856778e-003, -2.645871e-002, -4.602023e-002, -5.572572e-002, -3.277269e-002, 3.161705e-003, 2.026566e-002, -1.287016e-002, -6.513032e-002, -7.715764e-002, -3.040539e-002, 1.938835e-002, 4.775906e-002, 5.742368e-002, 1.016382e-002, -5.632916e-002, -7.306267e-002, -5.504825e-002, -3.443400e-002, -2.119583e-002, -4.452060e-002, -7.458797e-002, -7.066915e-002, -2.936948e-002, -1.639460e-003, -1.126883e-002, 4.686797e-003, -1.396820e-002, 7.845949e-003, 4.544788e-002, 3.184914e-002, -6.332566e-003, -4.514979e-002, -6.269860e-002, -7.206351e-002, -6.487769e-002, -5.779847e-002, -5.483239e-002, -6.442872e-002, -3.936435e-002, -1.358522e-002, 2.055535e-002, 3.406775e-002, -6.709159e-003, -5.630218e-002, -3.828860e-002, -3.846302e-003, 1.492959e-002, 9.313033e-003, -3.002670e-002, -6.129385e-002, -4.791449e-002, 6.807628e-003, 3.260458e-002, 4.260066e-003, -8.466601e-003, -2.752107e-002, -2.151376e-002, 3.414768e-002, 2.555097e-002, -5.619561e-003, -1.408881e-002, -1.357304e-003, -5.647822e-003, -3.844216e-002, -7.835302e-002, -7.630333e-002, -3.090411e-002, -2.705637e-002, -3.094307e-002, -1.092764e-002, -7.493634e-003, -3.341025e-002, -5.392387e-002, -1.826562e-002, -3.301282e-003, 1.590850e-003, -5.371209e-003, -1.763088e-002, -3.796656e-002, -2.569860e-002, 2.419046e-002, 7.500881e-002, 2.753165e-002, -2.365777e-002, -9.171670e-003, -2.865042e-002, 7.067877e-003, 1.167666e-002, -1.076897e-003, -4.388620e-002, -5.333786e-002, 2.884197e-002, 5.917364e-002, 1.007514e-003, -4.052275e-002, -1.763073e-002, 7.155938e-003, -3.240612e-002, -4.958859e-002, -6.034682e-002, -5.336821e-002, -6.843058e-002, -6.432763e-002, -6.026433e-002, -5.816099e-002, -8.567053e-002, -8.473751e-002, -7.485875e-002, -5.567748e-002, -3.874038e-002, 1.257425e-002, 2.599404e-003, -4.268857e-002, 7.023397e-002, 3.972183e-002, -8.536259e-003, -4.451042e-002, 9.226309e-002, 6.653886e-002, -4.802698e-002, 3.431988e-002, 1.191200e-001, 4.469286e-002, -2.993507e-002, -3.710734e-002, 1.763960e-002, 8.178004e-004, 8.755343e-004, 6.043116e-003, -6.664267e-003, -4.940422e-002, -7.938891e-002, -1.447668e-002, -3.178427e-002, -4.438879e-002, 2.023468e-002, 9.253709e-002, 2.304695e-002, -7.217597e-002, -3.380741e-002, 1.772463e-002, -1.190270e-002, 9.539874e-002, 3.735930e-002, -1.019338e-001, -1.181270e-001, 6.703207e-002, 1.473743e-001, -2.952022e-002, -3.206057e-002, 1.540587e-002, -4.258772e-002, -6.983485e-002, -8.058687e-002, 8.847906e-003, 2.273874e-002, 1.196656e-002, 2.427839e-002, 2.013298e-002, -2.233741e-002, -1.043594e-001, -8.909276e-002, -7.337498e-002, -5.453479e-002, 2.998887e-002, 9.399183e-002, -6.716381e-002, -1.274006e-001, -6.805246e-002, 4.290004e-002, 7.511233e-002, -7.927288e-003, -4.531679e-002, -8.340580e-002, -3.834325e-002, 1.303349e-002, 3.831670e-003, -2.815400e-002, -2.708609e-002, -2.394140e-002, -5.023843e-003, -2.016900e-002, -6.925797e-002, 2.292999e-002, 4.425350e-003, -7.815884e-003, -9.274291e-003, -9.645463e-003, 9.750218e-003, -1.446602e-002, -4.509690e-002, -5.478550e-002, -2.103918e-002, -7.747691e-003, -1.118813e-002, -8.341145e-003, -4.832352e-002, -7.584914e-002, -5.821269e-003, 5.856955e-002, -5.311575e-002, -4.239409e-002, -8.913364e-003, 6.356100e-003, -3.222880e-002, -8.362898e-002, -1.065076e-001, -8.835858e-002, -3.817880e-002, 1.937789e-002, -1.672754e-002, -6.017810e-002, 2.462498e-002, -3.083683e-002, -3.361338e-002, -2.817312e-002, -3.426196e-002, -6.760809e-003, 3.776968e-002, -7.307502e-003, -5.032250e-002, -6.111006e-002, -6.911645e-002, -5.953620e-002, 3.039707e-003, 1.008414e-002, -4.676533e-002, -5.260458e-002, 9.170276e-003, -3.820657e-002, -1.290087e-002, 5.584327e-002, 5.003867e-002, -2.267607e-002, -6.847075e-002, -7.318571e-002, -3.967699e-002, 1.681069e-002, 4.610098e-002, -2.102713e-002, -8.837997e-003, -6.586075e-004, -6.191290e-002, -6.556144e-002, -4.264963e-002, -4.325017e-002, -4.937357e-002, 3.256768e-002, 5.094327e-002, 7.816871e-003, -3.356841e-002, -5.895494e-002, -5.292162e-002, 1.220375e-002, 4.811239e-002, -1.259409e-003, -5.170223e-002, -9.762639e-003, -1.211425e-003, 1.814329e-002, 7.935850e-002, 6.981422e-002, 1.584074e-002, -1.135902e-002, -2.210510e-004, 3.051350e-002, 6.308296e-002, 5.595958e-002, 5.338161e-003, 1.696361e-002, -1.816992e-002, -8.701988e-002, -8.596837e-002, -2.704746e-002, -2.126602e-002, -5.138042e-002, -1.316165e-002, 4.212183e-002, 5.078447e-002, 1.738516e-002, -2.119880e-002, -1.633266e-002, 2.950312e-002, 7.467817e-002, 3.674715e-002, -2.042355e-002, 1.970592e-002, 4.555886e-002, 4.738793e-002, 6.485278e-002, 3.713157e-002, 4.925773e-003, -2.926308e-003, 9.108673e-003, 3.416263e-002, 4.913114e-002, 3.199818e-002, 2.538505e-002, -


© ISO/IEC 2004 — All rights reserved

Copyright International Organization for Standardization
Provided by IHS under license with ISO
No reproduction or networking permitted without license from IHS
Not for Resale

3.439363e-004, -3.633208e-002, -1.066626e-001, -1.000160e-001, -1.907417e-002, 2.281213e-002, -8.832328e-003, -3.066299e-002, 9.960703e-003, 2.203904e-002, 1.796339e-002, -3.632966e-003, -9.812087e-003, 2.251097e-002, 6.552678e-002, 5.071271e-002, 2.936543e-002, 5.333641e-002, 7.963856e-002, 7.361903e-002, 6.890914e-002, 1.261715e-002, -2.289847e-002, -3.354776e-002, -1.792335e-002, 1.414797e-002, 5.019271e-002, 6.181302e-002, 2.394318e-002, -2.641238e-002, -5.121041e-002, -1.119638e-001, -1.084402e-001, -3.356442e-002, 4.281098e-002, 3.743663e-002, 1.897064e-002, 9.427478e-003, 1.016424e-002, 6.101128e-003, -3.824842e-003, 1.444598e-003, 3.275758e-002, 7.014917e-002, 7.740014e-002, 7.242259e-002, 6.942929e-002},
{9.275672e-003, 1.401663e-002, 1.763098e-002, 5.474579e-003, 3.547654e-003, 5.470585e-003, 1.098335e-002, 1.774037e-002, 1.792458e-002, 2.007507e-002, 1.038669e-002, -8.301194e-003, -3.449842e-002, -5.606054e-002, -7.594476e-002, -8.061791e-002, -6.885221e-002, -4.172280e-002, -1.844387e-002, 3.383584e-003, 1.989034e-002, 1.985279e-002, 8.669112e-003, -1.029476e-002, -4.138838e-002, -2.590516e-002, -2.290302e-003, -1.337195e-002, -5.051253e-002, -2.880684e-002, -2.561689e-002, -1.819439e-002, -1.523956e-002, -1.370331e-002, -1.834258e-002, -2.263125e-002, -9.956082e-003, 1.203554e-002, 1.998385e-002, 1.287711e-002, -8.621962e-003, -3.846371e-002, -5.298285e-002, -6.119113e-002, -5.450701e-002, -3.683409e-002, -1.568056e-002, 3.308442e-004, 7.038032e-003, 1.008223e-002, 3.349622e-003, -1.008712e-002, -1.781189e-002, -2.206858e-002, -3.374485e-002, -1.694840e-002, 8.859147e-003, -2.349470e-002, -4.088776e-002, -2.199475e-002, -5.714076e-004, -1.038901e-003, -1.040297e-002, -1.743692e-002, -7.937327e-003, 1.115267e-002, 2.933173e-002, 2.936221e-002, 2.201868e-002, 2.757209e-003, -1.975404e-002, -3.403879e-002, -3.162984e-002, -1.342852e-002, 5.816863e-003, 1.951791e-002, 1.505718e-002, 1.001666e-002, 7.801175e-003, 4.375710e-004, -2.613192e-002, -3.250025e-002, -1.964940e-002, -3.628938e-003, -3.294639e-004, 1.798192e-002, 1.534073e-002, -2.125607e-002, 5.222648e-003, 1.186531e-002, 1.509534e-003, -6.967888e-003, -1.653206e-003, 1.618617e-003, 1.012726e-002, 1.985579e-002, 1.606030e-002, 1.802113e-002, 1.039818e-002, -1.636356e-002, -3.496123e-002, -3.333696e-002, -1.877967e-002, -9.158900e-003, -4.326831e-003, -1.572821e-002, -2.315959e-002, -1.921768e-002, -3.818036e-003, -5.185447e-003, -2.765469e-002, -3.644036e-002, -7.359945e-003, 1.542459e-002, 2.155023e-002, 2.973917e-002, 6.950247e-003, 1.859154e-002, 7.842398e-003, -3.630451e-003, 5.081863e-003, 2.765519e-003, -1.129473e-002, -1.846146e-003, 1.252282e-002, 1.510568e-002, 2.344733e-002, 1.665875e-002, -1.246734e-002, -4.181863e-002, -4.888250e-002, -3.636751e-002, -2.924233e-002, -2.806895e-002, -3.681538e-002, -4.570044e-002, -4.042777e-002, -1.641334e-002, 1.693206e-002, 9.742682e-003, -1.837086e-002, -1.487163e-002, 8.402971e-003, 1.985188e-002, 2.173620e-002, 1.033542e-002, 1.570198e-002, -5.487305e-003, 5.531738e-003, 9.614293e-003, -9.006162e-003, -2.200938e-002, -2.381532e-002, -1.586841e-002, -2.860173e-003, 1.042020e-002, 2.442238e-003, -1.781356e-002, -3.911638e-002, -5.003675e-002, -4.163163e-002, -2.865391e-002, -2.081786e-002, -2.565304e-002, -4.220707e-002, -4.218489e-002, -2.275248e-002, 1.443124e-002, 3.277775e-002, 1.707468e-002, 4.002906e-003, 8.961243e-003, 7.502700e-003, -6.565365e-004, 6.422491e-003, -2.271940e-003, -2.142094e-004, 1.618953e-002, 9.938890e-003, -6.969910e-003, -1.093342e-002, -1.979417e-002, -3.312841e-002, -3.084264e-002, -1.902807e-002, -2.094442e-002, -3.167301e-002, -4.692145e-002, -5.295968e-002, -4.967925e-002, -3.809127e-002, -2.086102e-002, -2.230003e-002, -3.117158e-002, -3.225729e-002, -1.875169e-002, 9.380901e-004, 2.135379e-002, 2.659360e-002, 2.180440e-002, 2.368781e-002, 4.304662e-003, -2.258213e-002, -9.201828e-003, -1.361508e-002, 8.824009e-003, 2.783836e-002, 2.094255e-002, 2.649234e-002, 3.936256e-002, 1.641263e-002, -1.869862e-002, -3.274914e-002, -2.281278e-002, -2.630378e-002, -2.895860e-002, -4.150566e-002, -4.680369e-002, -5.244065e-002, -4.855297e-002, -3.157449e-002, -2.138576e-002, -2.362036e-002, -1.735965e-002, -1.107706e-002, 7.869042e-005, 8.387997e-003, 9.985479e-003, 1.328807e-002, 2.380238e-002, 1.599543e-002, -2.203108e-002, -1.898438e-002, -8.514420e-003, 1.526249e-002, 2.241862e-002, 3.775773e-002, 7.617744e-002, 1.006949e-001, 7.846609e-002, 3.540196e-002, -1.187591e-003, -8.581314e-003, -4.878225e-003, -9.576950e-003, -1.650224e-002, -2.746657e-002, -4.372369e-002, -5.058797e-002, -3.884158e-002, -2.484997e-002, -1.565913e-002, 2.372695e-003, 9.489820e-003, 1.498797e-002, 1.505977e-002, 3.952908e-003, -2.173497e-003, 1.098175e-002, 1.897620e-002, -4.597994e-004, -1.293667e-002, -4.736509e-003, 6.787957e-003, 1.424415e-002, 5.311640e-002, 1.091732e-001, 1.315790e-001, 1.118016e-001, 6.640836e-002, 2.492723e-002, 1.017805e-002, 2.054120e-002, 2.352268e-002, 3.086296e-002, 2.139104e-002, 9.813102e-004, -1.947244e-002, -1.910571e-002, -1.932360e-002, -7.251124e-003, 1.657181e-002, 3.275693e-002, 4.201198e-002, 4.652193e-002, 2.890140e-002, 4.909334e-003, -5.769073e-003, 1.279457e-002, 1.305270e-002, -1.280527e-003, -1.106850e-002, -1.929039e-002, -3.048210e-003, 5.337724e-002, 1.073936e-001, 1.186990e-001, 9.359926e-002, 5.620675e-002, 3.086777e-002, 2.216644e-002, 3.434196e-002, 4.811007e-002, 6.486170e-002, 6.693503e-002, 5.138842e-002, 2.738097e-002, 1.662464e-002, 8.324104e-003, 2.332808e-003, 1.501522e-002, 3.353333e-002, 5.407001e-002, 6.868383e-002, 5.796627e-002, 2.423918e-002, -9.070392e-003, 2.876240e-003, 1.460566e-002, -5.656428e-003, -2.686683e-002, -4.606726e-002, -2.789431e-002, 2.481605e-002, 5.265192e-002, 4.872175e-002, 2.583480e-002, 8.264920e-003, 6.978365e-003, 1.456884e-002, 3.218677e-002, 5.694722e-002, 7.158424e-002, 7.526162e-002, 6.296983e-002, 3.949062e-002,

© ISO/IEC 2004 — All rights reserved


Copyright International Organization for Standardization
Provided by IHS under license with ISO
No reproduction or networking permitted without license from IHS
Not for Resale

2.437838e-002, 1.229636e-002, -8.230737e-003, -6.264640e-003, 1.238645e-002, 3.953611e-002, 6.752386e-002, 6.626623e-002, 2.951469e-002, -2.089631e-003, -2.039477e-003, 8.322078e-003, -6.736385e-003, -2.995239e-002, -5.630472e-002, -4.571439e-002, -2.075461e-002, -1.673135e-002, -2.667823e-002, -2.981791e-002, -2.321944e-002, -1.067814e-002, 1.163913e-003, 2.007205e-002, 4.753994e-002, 6.398028e-002, 6.504482e-002, 6.142088e-002, 3.778654e-002, 1.561886e-002, 3.728091e-005, -2.641387e-002, -3.676008e-002, -2.660184e-002, 2.918908e-003, 3.456416e-002, 5.172805e-002, 2.996013e-002, 6.070350e-003, -6.640685e-004, 7.361539e-004, -6.988094e-003, -1.662548e-002, -3.802455e-002, -4.214538e-002, -3.649645e-002, -4.166054e-002, -3.385277e-002, -1.731565e-002, 2.452882e-003, 1.108902e-002, 1.194934e-002, 1.659902e-002, 3.359131e-002, 4.879073e-002, 5.357139e-002, 5.265131e-002, 3.912983e-002, 2.020538e-002, -1.836469e-003, -1.366065e-002, -1.695884e-002, -1.393812e-002, 1.066756e-003, 2.011372e-002, 3.055012e-002, 1.899454e-002, 1.004931e-002, 3.524287e-003, -5.157775e-004, 8.742705e-003, 1.223326e-002, -2.757828e-002, -5.330843e-002, -4.672794e-002, -2.930726e-002, -1.945988e-002, -1.671492e-002, 7.264583e-004, 1.210434e-002, 1.767836e-002, 1.133788e-002, 1.109175e-002, 2.282379e-002, 3.102787e-002, 3.228104e-002, 3.090548e-002, 1.412758e-002, -1.254555e-002, -1.659874e-002, 5.374880e-003, 3.014691e-002, 4.078205e-002, 3.558646e-002, 6.790092e-003, -2.558132e-002, -2.177454e-002, -8.865440e-004, -2.687811e-003, 4.062896e-003, -2.104171e-002, -7.067858e-002, -7.483382e-002, -5.099236e-002, -1.865042e-002, -1.872498e-003, -6.610773e-003, -1.642032e-002, -1.683737e-002, -4.748841e-003, 3.152080e-003, 8.150339e-003, 1.405670e-002, 2.338686e-002, 2.580163e-002, 5.636022e-003, -2.719836e-002, -5.532937e-002, -5.514539e-002, -2.112559e-002, 2.748190e-002, 4.999181e-002, 3.830384e-002, -6.630173e-003, -7.680658e-002, -9.029371e-002, -4.184970e-002, -1.354938e-002, -1.294908e-002, -3.236266e-002, -6.543268e-002, -9.345889e-002, -7.640111e-002, -3.489683e-002, -8.988482e-003, -9.386559e-003, -1.670035e-002, -2.258313e-002, -1.979934e-002, -6.701168e-003, 2.408035e-002, 4.465955e-002, 5.256632e-002, 5.067459e-002, 1.737824e-002, -2.255010e-002, -4.771083e-002, -5.424086e-002, -3.279548e-002, -5.699340e-003, 1.429238e-002, 1.538121e-002, -8.168482e-003, -5.963207e-002, -8.991060e-002, -5.959702e-002, -1.322499e-002, 1.892455e-002, 8.359466e-003, -2.436928e-002, -4.999455e-002, -3.686837e-002, -1.500983e-002, -1.581474e-002, -1.523727e-002, -9.993655e-003, -1.026031e-002, -1.800511e-002, -2.277422e-002, 5.950775e-003, 3.028843e-002, 4.415075e-002, 5.127745e-002, 4.045026e-002, -2.187163e-003, -3.344489e-002, -3.462463e-002, -1.913402e-002, -1.576925e-002, -1.597421e-002, -8.111092e-003, -1.745533e-002, -4.841104e-002, -5.540212e-002, -1.689082e-002, 1.298999e-002, 3.160201e-002, 5.127948e-003, -1.670370e-002, -5.727420e-002, -6.946192e-002, -5.326629e-002, -2.623292e-002, -4.137603e-002, -6.579945e-002, -5.266351e-002, -3.399863e-002, -1.785569e-002, -2.765859e-002, -2.820129e-002, -2.372278e-002, 5.314560e-003, 4.071531e-002, -1.624318e-002, -4.033679e-002, -2.919162e-002, -3.599881e-002, -4.045267e-002, -5.447640e-002, -4.836024e-002, -6.124030e-002, -7.086847e-002, -6.021041e-002, 2.071082e-003, 3.157820e-002, 3.260300e-002, -1.829861e-002, 8.948710e-003, 3.067270e-003, -7.108415e-002, -9.388795e-002, 3.763019e-002, 3.727497e-002, -2.388750e-002, -6.514784e-002, -6.300799e-002, -3.749165e-002, -1.941405e-002, -4.215153e-003, -7.547501e-003, -2.661873e-003, 2.468849e-002, -4.617930e-002, -3.774707e-002, 9.461830e-003, 2.132079e-002, -3.908594e-003, -4.935095e-002, -3.529759e-002, -3.738294e-002, -2.876297e-002, -1.218402e-002, 4.510445e-003, 7.029065e-003, 2.215531e-002, -1.706352e-002, 5.862468e-002, 2.971645e-002, -1.037629e-001, -1.919821e-001, -2.828415e-002, 4.297264e-002, 3.652024e-002, 1.236758e-002, -4.479111e-002, -2.003782e-002, -2.436775e-003, -3.257669e-003, -1.338417e-002, -1.320302e-002, 1.716404e-002, -4.760168e-002, -9.871677e-003, 9.486894e-002, 7.091025e-002, 9.367028e-003, -6.129027e-002, -1.113163e-001, -7.604061e-002, 4.245899e-002, 7.813836e-002, 3.717099e-002, -1.887861e-002, 1.003343e-002, -1.491587e-002, 2.833991e-002, -1.642113e-002, -7.176628e-002, -7.026127e-002, -1.604042e-002, 3.129690e-002, 4.888781e-002, 2.123639e-002, -2.646231e-002, 1.421807e-002, 2.947901e-002, 1.358875e-002, 2.662691e-003, 2.161258e-003, 2.224738e-002, -1.527125e-002, -3.665487e-002, 3.476139e-002, 4.222031e-002, -8.610878e-003, -3.977571e-002, -5.275766e-002, -5.585657e-002, 7.149776e-003, 8.158268e-002, 4.740054e-002, -2.223333e-002, 1.628992e-002, -1.795123e-002, -1.435398e-002, -2.919697e-002, -3.328123e-002, -4.485673e-003, 3.454497e-002, 5.439259e-002, 3.980915e-002, -1.531375e-002, -2.569709e-002, 4.666134e-002, 3.954606e-002, 3.169723e-002, 1.753956e-002, 9.611033e-003, 2.076700e-002, 1.330706e-002, -5.038145e-002, -5.525706e-003, 3.998321e-002, 4.769929e-002, 3.646193e-002, 2.020757e-002, -2.522909e-002, -2.439186e-002, 2.853008e-002, 1.405523e-002, -2.643542e-002, 1.175082e-002, 7.513862e-003, -1.859320e-002, -3.372711e-002, -2.593261e-002, -7.362767e-003, 1.071342e-002, 5.762456e-003, -2.354165e-002, -4.763630e-002, 9.171015e-003, 5.555358e-002, 3.691884e-002, 4.911320e-002, 3.158028e-002, 9.908172e-003, 1.766826e-002, 3.239985e-002, -2.797240e-002, -4.216136e-002, -2.934180e-003, 2.157321e-002, 2.625138e-002, 1.321935e-002, -2.916763e-002, -4.499996e-002, -1.056867e-002, -2.432996e-003, -1.330966e-002, 6.421350e-004, 2.143531e-002, 1.309760e-002, -7.154938e-003, -1.265811e-002, -1.226219e-002, -1.650174e-002, -3.073291e-002, -4.636249e-002, -2.910791e-002, 4.397042e-002, 4.331028e-002, 3.293711e-002, 7.001955e-002, 4.734973e-002, 1.439627e-002, 1.864572e-002, 2.585041e-002, 5.508839e-003, -3.083182e-002, -2.369346e-002, 7.590123e-003, 2.253343e-002, 1.008217e-002, -


© ISO/IEC 2004 — All rights reserved

Copyright International Organization for Standardization
Provided by IHS under license with ISO
No reproduction or networking permitted without license from IHS
Not for Resale

2.141800e-002, -4.583326e-002, -1.690945e-002, 5.836013e-003, 9.140700e-003, -2.017829e-002, 3.486773e-002, 6.526257e-002, 6.247200e-002, 4.150813e-002, 2.879227e-002, 8.296358e-003, -1.075602e-002, -8.344475e-003, 3.945284e-002, 5.114688e-002, 5.600631e-003, 2.149505e-002, 7.614525e-002, 4.223317e-002, 1.549431e-003, 1.699644e-002, 2.406459e-002, 2.397835e-002, 1.108335e-002, 8.324208e-003, 2.349002e-002, 4.636237e-002, 5.362562e-002, 3.370233e-002, 1.316217e-002, 1.796614e-002, 2.162794e-002, 3.028382e-002, -2.352652e-002, 2.975791e-002, 8.355273e-002, 1.109395e-001, 1.037333e-001, 9.107723e-002, 7.187512e-002, 5.331831e-002, 4.478309e-002, 4.467964e-002, -7.674563e-003, -5.148284e-002, -1.500369e-002, 3.363410e-002, -3.186469e-003, -3.584404e-002, -5.171095e-003, 2.867105e-002, 2.143961e-002, 2.889450e-002, 5.349313e-002, 7.598678e-002, 1.015114e-001, 1.050454e-001, 8.902644e-002, 6.218416e-002, 4.306506e-002, 3.523427e-002, 3.850583e-002},
{-1.286281e-001, -1.648010e-002, 9.866503e-003, -2.875874e-002, -4.370401e-002, -1.600576e-002, 2.209135e-003, 1.816959e-003, -5.487854e-003, 2.471151e-003, 1.466121e-002, 3.651221e-002, 4.624094e-002, 4.520445e-002, 2.075687e-002, -1.132589e-002, -3.920004e-002, -4.642036e-002, -3.201876e-002, -5.858166e-003, 1.239997e-002, 2.176174e-002, 1.647019e-002, -9.859240e-003, -3.505639e-002, -2.695181e-002, 5.787344e-003, -2.236071e-002, -1.093744e-001, -6.062172e-003, 2.262545e-002, -3.416060e-003, -1.048313e-002, 4.009498e-003, 8.100161e-003, 2.866536e-003, -6.097663e-003, -2.999776e-003, 7.203452e-003, 1.383981e-002, 3.332986e-002, 4.357801e-002, 4.855247e-002, 3.009489e-002, 1.897734e-003, -1.822360e-002, -1.921942e-002, -4.693542e-003, 1.255401e-002, 2.336631e-002, 2.914391e-002, 1.820315e-002, 1.972718e-002, 1.633112e-002, -6.089649e-003, 5.860695e-003, 3.330272e-002, -1.795230e-002, -3.012263e-003, -2.217885e-002, -1.084938e-002, -1.594478e-003, 2.286696e-004, -1.582688e-002, -1.279910e-002, -1.274252e-002, -1.223772e-002, -1.022065e-002, -9.128053e-003, -1.431882e-003, -5.530084e-004, -6.453416e-003, -1.480511e-002, -1.422871e-002, -7.490249e-003, 1.244750e-002, 1.474267e-002, 2.023284e-002, 2.440194e-002, 2.150936e-002, -1.519258e-003, -1.840905e-002, -2.298730e-003, 1.011626e-002, 3.623401e-003, 7.487220e-003, 2.071960e-003, -2.152187e-002, -1.678836e-002, -4.855052e-003, -1.669415e-002, -1.546183e-002, 2.798532e-003, 7.200944e-003, 9.677623e-003, 5.258239e-003, 7.596760e-003, 8.994258e-003, 6.879494e-004, -1.375133e-002, -2.695478e-002, -3.137718e-002, -1.327954e-002, 6.186448e-003, 3.705065e-002, 3.247419e-002, 2.939024e-002, 3.404914e-002, 4.391901e-002, 2.015633e-002, -2.462321e-002, -4.676234e-002, -2.700534e-002, 6.057857e-003, 2.941666e-003, -1.245334e-002, 1.272672e-003, 4.645928e-003, -2.074596e-002, -2.474086e-002, 4.323180e-003, 1.333956e-002, 1.140168e-002, 3.413458e-003, 7.028325e-004, 1.063857e-002, 2.534088e-002, 1.561662e-002, -4.471951e-003, -2.445444e-002, -2.578468e-002, -4.646525e-004, 2.494693e-002, 4.445449e-002, 3.937745e-002, 2.102688e-002, 1.735704e-002, 3.206778e-002, 2.916016e-002, -6.188552e-003, -4.706433e-002, -4.913137e-002, -2.064280e-002, 6.994007e-003, -7.096791e-003, 2.906006e-002, 1.061352e-003, -3.118005e-002, -2.032999e-002, -1.895131e-002, -2.834620e-002, -3.764831e-002, -3.246463e-002, -2.859430e-002, -6.878600e-003, 2.068990e-002, 2.393009e-002, 9.988930e-003, -1.087062e-003, -3.532135e-003, 1.525814e-002, 3.640247e-002, 4.443003e-002, 3.874874e-002, 6.565576e-003, -1.438700e-002, -1.282973e-002, -6.027897e-004, -1.356094e-002, -3.236446e-002, -3.489927e-002, -1.411115e-002, -2.688584e-003, 4.936290e-003, 3.164326e-002, -1.386046e-002, -2.835391e-002, -1.874290e-002, -3.934382e-002, -5.416000e-002, -3.905248e-002, -3.378155e-002, -3.538853e-002, -1.153887e-002, 1.420885e-002, 2.009565e-002, 2.390505e-002, 2.566050e-002, 2.065534e-002, 2.575206e-002, 3.712986e-002, 4.434392e-002, 3.601624e-002, -1.903499e-003, -2.507284e-002, -2.575428e-002, -1.946052e-002, -2.744024e-002, -2.462865e-002, -1.723728e-002, 1.005938e-002, 9.236427e-003, 3.458023e-004, 9.551378e-003, -2.329506e-002, -2.218959e-002, -3.085680e-002, -3.969772e-002, -1.354695e-002, 1.920167e-002, 1.317287e-002, -9.599115e-003, -5.662100e-003, 1.775699e-002, 2.953595e-002, 4.032152e-002, 4.405877e-002, 3.691775e-002, 3.042873e-002, 3.590399e-002, 3.922055e-002, 3.592816e-002, 9.420854e-003, 3.213259e-004, 7.932027e-003, 1.115332e-002, -9.034945e-003, -1.954441e-002, -1.723215e-002, 1.949450e-002, 2.174809e-002, -5.948750e-003, -8.735822e-003, -1.941089e-002, -1.857999e-002, -2.949153e-002, 5.627305e-003, 5.368466e-002, 7.690386e-002, 5.681243e-002, 1.760492e-002, 1.752448e-003, 2.178687e-002, 5.145365e-002, 5.549416e-002, 5.688549e-002, 4.135411e-002, 2.661044e-002, 2.328958e-002, 2.582271e-002, 2.487126e-002, 2.099377e-002, 3.291431e-002, 4.625176e-002, 5.771823e-002, 3.926654e-002, 3.938654e-003, -2.220398e-002, 3.927841e-003, 1.784768e-002, -1.602225e-002, -1.241327e-002, -1.490765e-002, -1.752109e-002, -6.716027e-003, 4.949784e-002, 8.810121e-002, 9.414131e-002, 5.709342e-002, 1.399043e-002, -6.093714e-003, 1.415780e-002, 4.536544e-002, 4.977408e-002, 4.569674e-002, 3.529118e-002, 1.491069e-002, 3.319856e-003, 8.818836e-003, -1.111704e-004, 1.193338e-003, 3.279986e-002, 5.250973e-002, 7.097319e-002, 6.397822e-002, 2.727955e-002, -1.242339e-002, -1.669124e-002, -2.942393e-003, -2.848106e-002, -1.204953e-003, -4.082197e-003, -1.150546e-002, 1.481986e-002, 5.862314e-002, 7.648398e-002, 6.131260e-002, 2.372799e-002, -1.416916e-002, -2.345548e-002, -4.625227e-003, 2.218065e-002, 2.402443e-002, 2.035165e-002, 3.584379e-003, -1.629048e-002, -3.127122e-002, -2.963516e-002, -3.022171e-002, -2.821682e-002, -2.113568e-003, 1.671294e-002, 3.053289e-002, 4.254901e-002, 2.131240e-002, -1.479268e-002, -1.803135e-002, -1.133906e-002, -3.421163e-002, 1.074158e-002,

© ISO/IEC 2004 — All rights reserved


Copyright International Organization for Standardization
Provided by IHS under license with ISO
No reproduction or networking permitted without license from IHS
Not for Resale

4.975557e-003, -6.454884e-003, 1.185470e-002, 3.338650e-002, 3.960929e-002, 2.088051e-002, -4.273813e-003, -2.250460e-002, -2.135022e-002, -1.048771e-002, -2.860835e-003, -4.166169e-003, -9.845788e-003, -2.339892e-002, -3.825902e-002, -4.582939e-002, -4.597154e-002, -2.457100e-002, -2.004396e-002, -7.477917e-003, -1.188103e-002, -1.168689e-002, -6.410229e-003, -7.087825e-003, -2.477233e-002, -1.460969e-002, 7.329213e-003, -1.865320e-002, 9.708254e-003, 1.839471e-003, -1.365155e-002, -1.836473e-002, -1.069289e-002, -8.132082e-003, -6.380276e-003, 1.450259e-004, 8.548256e-003, 1.504223e-002, 7.329520e-003, 9.730473e-004, -3.659031e-003, -8.521609e-003, -1.687638e-002, -2.116139e-002, -2.172340e-002, -1.679313e-002, 6.741680e-003, 2.226727e-002, 1.758861e-002, -1.294250e-002, -3.767455e-002, -4.343430e-002, -4.030075e-002, -3.757492e-002, -1.529565e-002, 2.506731e-002, 1.591463e-002, -7.153127e-003, -1.835699e-002, -3.571127e-002, -4.732478e-002, -5.319619e-002, -6.609200e-002, -5.313817e-002, -1.834930e-002, 1.393949e-002, 3.495399e-002, 3.532634e-002, 2.119053e-002, 2.384558e-002, 2.429482e-002, 1.899456e-002, 1.518505e-002, 1.959730e-002, 1.980961e-002, 2.501907e-002, 3.348075e-002, 2.011945e-002, -2.216621e-002, -5.559681e-002, -6.883320e-002, -6.502508e-002, -6.703378e-002, -4.307537e-002, 1.620079e-002, 2.689452e-002, -3.434082e-002, -2.916296e-002, -2.253887e-002, -4.235788e-002, -5.770325e-002, -5.830546e-002, -3.686525e-002, -1.400138e-002, 8.486763e-004, 7.946833e-003, 2.319331e-002, 3.151879e-002, 5.552255e-002, 6.879400e-002, 6.460297e-002, 4.089602e-002, 3.261829e-002, 7.973822e-003, 3.356338e-004, 1.073453e-002, 2.387436e-002, 1.223392e-002, -2.216695e-002, -6.850528e-002, -8.040517e-002, -8.505906e-002, -9.333088e-002, -3.879136e-002, -2.823431e-003, -5.747305e-002, -3.359615e-003, -8.045754e-003, -7.515993e-002, -1.045045e-001, -6.687627e-002, -3.564208e-003, 2.844351e-002, 2.546113e-002, 4.807061e-005, -2.256378e-002, -1.755622e-002, 3.199301e-002, 5.781900e-002, 5.290687e-002, 8.233557e-003, -4.145605e-002, -6.285703e-002, -1.872636e-002, 4.962855e-002, 8.267121e-002, 4.242971e-002, -5.837333e-002, -1.393373e-001, -1.360162e-001, -6.162328e-002, -5.717798e-002, -7.193067e-002, -4.147580e-002, -4.101594e-002, 3.185137e-002, -2.468569e-002, -1.014834e-001, -1.103905e-001, -7.276465e-002, -7.047818e-003, 3.923538e-002, 4.850031e-002, 2.538799e-002, -2.110684e-002, -2.984292e-002, 3.364109e-002, 6.258812e-002, 4.912987e-002, 1.420286e-003, -5.791253e-002, -7.082985e-002, -1.363114e-002, 4.172899e-002, 6.292354e-002, 3.417528e-002, -4.072903e-002, -9.276479e-002, -9.918855e-002, -2.414012e-002, 5.402430e-002, 1.738080e-002, -4.795503e-002, -1.529304e-002, 3.417788e-002, 1.125943e-002, -2.152119e-002, -3.186887e-002, -4.114156e-002, -2.218750e-002, 8.973633e-003, 5.302075e-002, 4.768158e-002, 6.348883e-004, -2.865491e-002, 2.985851e-002, 4.761177e-002, 2.920288e-002, 9.010392e-003, -1.007425e-002, -3.594001e-002, -1.216163e-002, 2.206277e-002, 2.816421e-002, 2.348950e-003, -2.934472e-002, -4.634528e-002, -5.234261e-002, -2.926761e-002, 2.443244e-002, 3.862680e-002, -1.679636e-002, -3.226670e-002, 4.411514e-002, 7.326676e-002, 4.454356e-002, 2.766554e-002, 2.602989e-002, -1.532365e-002, -4.155164e-002, 2.840795e-002, 9.802032e-002, 7.557763e-002, 1.311751e-002, 2.878087e-002, -3.178289e-003, -4.251041e-002, 1.340452e-002, 5.158794e-002, -5.121776e-003, 3.846571e-002, 5.854466e-002, 1.504486e-002, -2.331571e-002, -2.776855e-002, -9.787178e-004, 5.359314e-002, 3.852396e-002, -7.356785e-003, -6.698788e-004, -1.525294e-002, -9.707394e-003, 4.088207e-002, 3.260121e-002, -2.355894e-002, 3.439566e-002, 9.944098e-002, -9.288131e-003, -1.315284e-001, -6.774665e-002, 5.639929e-002, 5.770137e-002, 2.903233e-002, 8.880282e-002, 4.128425e-002, -5.393686e-003, 6.090585e-002, 9.495259e-002, -2.138806e-002, 2.106932e-002, 5.419897e-002, -3.951116e-002, -5.692743e-003, -7.515222e-003, -7.882484e-002, -2.163302e-002, 3.131313e-002, 1.116769e-002, 1.218723e-002, 2.133745e-003, 7.313244e-002, 4.942817e-002, 1.515974e-002, 1.921790e-002, 7.197710e-002, 7.768678e-004, -1.177618e-001, -1.010070e-001, -5.553219e-003, 5.904525e-003, 6.711581e-003, -4.390698e-002, 4.566968e-002, -1.777311e-002, -6.623699e-002, -1.767875e-002, 3.258673e-002, -6.685005e-002, -1.794134e-002, 1.776694e-002, -9.917063e-002, -2.333422e-002, 7.229961e-002, 3.304379e-002, -2.826662e-002, -9.203655e-003, 9.994181e-005, 4.187691e-002, 4.765375e-002, 5.474532e-002, 8.755320e-003, 1.375988e-002, 6.674751e-002, 7.585414e-002, -1.652904e-003, -4.564996e-002, -1.798734e-002, 1.443052e-002, 4.058699e-002, 9.837609e-003, -4.647857e-002, -5.945125e-003, -4.932887e-002, -5.503160e-002, -5.563208e-002, -2.520863e-002, -4.456852e-002, -1.833734e-002, -7.019161e-003, -4.920011e-002, -4.732782e-002, 3.089774e-003, 4.121618e-002, 6.441283e-002, 3.149241e-002, -4.601439e-003, 3.076421e-002, 2.393343e-002, 2.220687e-002, -2.841800e-002, -2.065834e-002, 2.665115e-002, 2.774448e-002, -1.837505e-002, -4.567461e-002, -3.490752e-002, -7.608428e-003, 2.338155e-002, -6.608077e-003, -4.515460e-002, -2.850395e-002, -1.723523e-002, -5.384538e-003, -2.237984e-002, -4.125936e-002, -4.063612e-002, -2.663790e-003, -1.391616e-002, -5.228431e-002, -6.159920e-002, -4.101164e-002, 7.497267e-003, 6.292085e-002, 4.250917e-002, -2.221141e-002, -1.102471e-004, -1.381482e-002, -1.366858e-002, -3.513375e-002, -4.079643e-002, -1.508974e-002, -2.567931e-002, -6.181212e-002, -7.101399e-002, -4.786751e-002, -1.776379e-002, -8.133327e-003, -3.050083e-002, -2.057398e-002, -3.050348e-002, 1.333419e-002, 2.489938e-002, 1.050200e-002, -2.184612e-002, -2.044778e-002, 2.533105e-002, 2.742924e-002, -1.887264e-002, -5.807052e-002, -5.446142e-002, -1.668282e-002, 3.671612e-002, 2.459940e-002, -1.600053e-002, -2.263141e-002, -2.935057e-002, -2.813600e-002, -2.543491e-002, -2.855641e-002, -2.150684e-002, -4.830865e-002, -6.583282e-002, -5.665477e-002, -4.508728e-002, -


--`,,```,,,,````-`-`,,`,,`,`,,`---
© ISO/IEC 2004 — All rights reserved

Copyright International Organization for Standardization
Provided by IHS under license with ISO
No reproduction or networking permitted without license from IHS
Not for Resale

4.364023e-002, -3.483104e-002, -1.226929e-002, -1.981614e-002, -2.593219e-002, 1.827796e-002, 2.902710e-002, 1.590295e-002, -7.923155e-003, 8.045324e-003, 3.932452e-002, 4.453675e-002, 1.833585e-002, -1.238317e-002, -2.474873e-002, -8.782439e-003, 1.695061e-002, 9.946675e-003, -1.318258e-002, -2.732869e-002, -1.979580e-002, -3.612595e-002, -4.006485e-003, 3.564979e-003, 1.235411e-002, -3.166375e-002, -5.795323e-002, -6.665408e-002, -6.240585e-002, -4.268973e-002, -4.101775e-003, 6.247750e-003, -2.506454e-002, -8.276026e-003, 2.811640e-002, 3.744834e-002, 8.670827e-003, -1.037542e-002, 8.856759e-003, 3.982087e-002, 3.967582e-002, 9.275436e-003, -1.129357e-002, -2.796458e-002, -2.540035e-002, -1.037197e-002, -3.136965e-004, -9.323940e-003, -1.779793e-002, 5.993262e-003, -4.260493e-002, -3.134201e-003, 3.270078e-002, 4.993465e-002, 4.629229e-003, -2.936635e-002, -4.037498e-002, -3.146697e-002, -9.565555e-003, 5.185096e-003, 1.749761e-003, -5.405012e-004, 6.136438e-002, 1.023965e-001, 9.082452e-002, 5.272686e-002, 2.382083e-002, 1.016513e-002, 3.049910e-002, 3.811675e-002, 8.112396e-003, -1.077924e-002, -2.557118e-002, -2.125621e-002, -6.874751e-003, 2.711859e-003, -3.084133e-003, 7.071004e-003, 2.044367e-002},
{-7.554442e-002, 1.054242e-002, 3.435256e-002, 6.066847e-003, -2.117711e-002, -2.418142e-002, -9.247948e-003, 2.895156e-005, 7.623240e-003, 6.587886e-003, -8.137644e-003, -1.833887e-002, -2.310274e-002, -9.785768e-003, 9.320537e-003, 2.198078e-002, 2.802506e-002, 2.516303e-002, 2.132491e-002, 3.918419e-003, -4.595110e-003, 1.948838e-003, 1.177504e-002, 1.407546e-002, 1.075474e-002, 9.912727e-003, 2.733933e-002, -1.189209e-002, -7.821222e-002, -5.126645e-002, -5.176166e-003, -2.375838e-002, -4.546945e-002, -4.063785e-002, -2.872172e-002, -1.845993e-002, -9.234957e-003, -4.760945e-003, -2.377918e-002, -5.127203e-002, -6.930265e-002, -7.500999e-002, -6.252983e-002, -4.378323e-002, -3.277658e-002, -2.902999e-002, -2.598254e-002, -1.810705e-002, -1.794972e-002, -2.323113e-002, -2.607963e-002, -1.136593e-002, -4.707030e-003, -2.543559e-002, -3.900620e-002, -2.342828e-002, -1.399183e-003, -5.104641e-002, -1.364966e-002, 2.621180e-003, -2.143138e-003, 8.320938e-004, -7.091289e-003, -6.936740e-003, 1.542606e-002, 2.508246e-002, 2.454102e-002, 5.088347e-003, -7.638330e-003, -2.133194e-002, -2.135671e-002, -1.303982e-002, -4.110814e-003, -9.787475e-003, -1.854114e-002, -1.724777e-002, -2.905614e-003, 1.250998e-002, 1.877062e-002, 6.312097e-003, 4.543336e-004, -3.222845e-003, -1.449976e-002, -3.689091e-002, -3.987972e-002, 2.468962e-004, 4.104125e-003, -6.784406e-004, 1.762267e-002, 2.423681e-002, 1.533984e-003, -2.227807e-002, -1.651763e-002, 4.657757e-003, 1.923169e-002, 2.178726e-002, 6.993713e-003, -8.414247e-003, -1.178977e-002, -1.716605e-003, 7.770575e-003, 2.700796e-003, -1.700136e-002, -2.868327e-002, -2.884016e-002, -5.084218e-003, 1.921350e-002, 3.392555e-002, 3.095764e-002, 1.457522e-002, -3.748399e-004, -1.254908e-002, -2.756824e-002, -3.631529e-002, -3.480833e-003, 2.521411e-002, 1.474863e-002, 1.761899e-002, 3.147070e-003, -2.741557e-002, -4.629473e-002, -3.827777e-002, -2.144732e-002, -5.878329e-003, -1.285666e-002, -3.163371e-002, -4.491151e-002, -4.314339e-002, -2.779060e-002, -1.608214e-002, -2.488954e-002, -3.943667e-002, -4.386081e-002, -3.629107e-002, -8.960538e-003, 1.675264e-002, 3.270428e-002, 3.700416e-002, 2.000574e-002, -5.157821e-003, -2.697016e-002, -3.985266e-002, -4.032770e-002, -3.524050e-003, 3.590211e-002, 8.248465e-003, 1.530393e-003, -2.253208e-002, -3.582599e-002, -3.829160e-002, -2.930310e-002, -1.806821e-002, -1.050437e-002, -1.887094e-002, -3.372211e-002, -4.927579e-002, -4.629130e-002, -4.186635e-002, -3.963166e-002, -5.007492e-002, -5.536062e-002, -4.852709e-002, -3.053288e-002, -9.773292e-004, 2.550627e-002, 3.609506e-002, 3.421613e-002, 2.349224e-002, -3.100399e-003, -2.568160e-002, -3.941970e-002, -4.136747e-002, 3.161076e-004, 4.459259e-002, -9.717613e-003, -1.337370e-002, -1.088326e-002, -8.984978e-003, -1.414273e-002, -1.322158e-002, -5.061014e-003, -2.648585e-003, -5.699594e-003, -1.787995e-002, -3.221083e-002, -3.335639e-002, -3.774815e-002, -4.122042e-002, -5.160140e-002, -5.447743e-002, -4.811045e-002, -3.133415e-002, -2.104998e-003, 2.070998e-002, 2.946532e-002, 2.412498e-002, 1.338902e-002, 1.230952e-003, -8.043563e-003, -1.737320e-002, -2.555658e-002, 4.905600e-003, 5.641514e-002, -1.615170e-002, 2.958114e-004, 1.871004e-002, 1.023984e-002, -6.529789e-003, -8.785114e-003, -7.489775e-003, -4.979058e-003, -5.500811e-003, -1.121141e-002, -2.580180e-002, -2.994948e-002, -3.436325e-002, -3.680422e-002, -4.112027e-002, -4.830985e-002, -4.251171e-002, -2.403333e-002, -2.853254e-003, 1.274056e-002, 9.175252e-003, 2.683560e-003, -8.847740e-003, -2.089844e-002, -1.220631e-002, 5.521762e-003, 1.098169e-003, 6.892076e-003, 4.957767e-002, -7.627804e-003, 2.682318e-002, 2.846685e-002, 1.376475e-002, 5.331702e-003, 6.188544e-003, 6.288048e-003, 1.143813e-002, 6.958500e-003, 2.439422e-003, -9.772548e-003, -1.635025e-002, -1.584473e-002, -1.898738e-002, -2.218704e-002, -2.845482e-002, -2.864321e-002, -1.105668e-002, 1.931421e-003, 7.752048e-003, -3.802873e-003, -7.737656e-003, -1.780020e-002, -3.239273e-002, -2.905896e-002, 5.156390e-003, 2.370695e-002, 5.517388e-003, 2.981407e-002, 4.567115e-003, 3.389921e-002, 2.001910e-002, 1.310669e-002, 1.814845e-002, 3.036250e-002, 3.180116e-002, 4.027277e-002, 3.719545e-002, 3.059858e-002, 2.067688e-002, 1.920407e-002, 2.307815e-002, 2.184557e-002, 1.180765e-002, 4.260372e-003, 4.683952e-003, 1.733125e-002, 2.185825e-002, 2.024372e-002, 7.312043e-003, -2.854025e-003, -1.595786e-002, -3.301365e-002, -3.747694e-002, -1.642284e-003, 3.043045e-002, -1.062842e-003, 9.169699e-003, 1.313473e-002, 3.168187e-002, 1.384600e-002, 1.550554e-002, 3.903474e-002, 4.796559e-002, 5.020750e-002, 5.591854e-002, 5.211437e-002, 4.701606e-002, 4.392370e-002, 5.020233e-002, 6.025392e-002, 6.109540e-002,

© ISO/IEC 2004 — All rights reserved


Copyright International Organization for Standardization
Provided by IHS under license with ISO
No reproduction or networking permitted without license from IHS
Not for Resale

5.611287e-002, 4.720805e-002, 4.739197e-002, 5.322238e-002, 5.214090e-002, 4.480759e-002, 3.241146e-002, 1.472982e-002, -2.532868e-003, -1.414744e-002, -1.499079e-002, 1.684461e-004, 3.202118e-002, 6.887804e-003, -6.041695e-003, 2.533913e-002, 2.558993e-002, 1.186400e-002, 2.400517e-002, 4.581227e-002, 4.489286e-002, 3.928401e-002, 3.892528e-002, 4.356721e-002, 4.672437e-002, 5.633156e-002, 6.913021e-002, 7.935447e-002, 8.174603e-002, 7.644464e-002, 7.056600e-002, 6.934089e-002, 7.222237e-002, 6.974904e-002, 6.050885e-002, 4.540684e-002, 2.964080e-002, 2.163887e-002, 1.797301e-002, 1.655883e-002, 2.343826e-002, 3.449086e-002, 2.474733e-002, -4.841672e-003, 3.316118e-002, 1.702624e-002, -8.561306e-004, 8.866276e-003, 1.765856e-002, 1.284102e-002, 1.533485e-003, -9.588862e-003, -1.712805e-003, 1.456115e-002, 3.509687e-002, 5.277026e-002, 6.098782e-002, 6.312622e-002, 6.109590e-002, 5.724118e-002, 5.908510e-002, 5.853327e-002, 5.456510e-002, 4.794623e-002, 3.454377e-002, 2.033502e-002, 1.894834e-002, 2.308692e-002, 2.491013e-002, 3.021581e-002, 3.195933e-002, 3.783495e-002, 1.172381e-002, 3.768195e-002, -3.548441e-003, -3.247415e-002, -3.203811e-002, -2.152164e-002, -8.857373e-003, -1.536541e-002, -2.662843e-002, -2.862396e-002, -2.866470e-002, -1.628240e-002, -4.849964e-003, 1.079663e-003, 7.178993e-003, 5.190540e-003, -8.790116e-004, 8.559846e-003, 1.939494e-002, 2.190098e-002, 2.066690e-002, 1.058359e-002, 1.709288e-003, 1.084094e-003, 5.203671e-003, 1.740251e-003, 1.199152e-003, 7.668800e-003, 3.175428e-002, 2.802283e-002, 3.155030e-002, -2.174211e-002, -3.541107e-002, -1.798688e-002, -4.432041e-003, 1.454458e-002, 2.209765e-002, 1.983042e-002, 1.244844e-002, 1.258243e-003, -2.494955e-002, -4.575980e-002, -5.144142e-002, -4.469850e-002, -4.997758e-002, -5.894892e-002, -3.616470e-002, -2.389401e-003, 1.862141e-002, 2.174550e-002, 8.159138e-003, 6.719010e-003, 1.315481e-002, 1.569800e-002, 5.437384e-003, -1.259173e-002, -2.798063e-002, -5.296757e-003, 2.245484e-002, 2.249023e-002, 3.848532e-003, 2.192262e-002, 3.532793e-002, 3.148756e-002, 6.924482e-003, -1.383645e-002, -1.134704e-002, 2.458113e-003, 1.111278e-002, 7.365886e-004, -2.780002e-002, -3.533647e-002, -2.963278e-002, -3.693951e-002, -6.038122e-002, -5.497782e-002, -3.449234e-002, -2.752953e-002, -2.007464e-002, -2.906064e-003, 1.499849e-002, 3.455866e-002, 4.707417e-002, 5.825859e-002, 4.007222e-002, -9.682516e-003, -2.694083e-002, 5.514050e-003, 2.401943e-002, 3.135179e-002, 3.465363e-002, 4.518541e-002, 4.213734e-002, 3.166190e-002, 3.376323e-002, 4.198662e-002, 2.439041e-002, -1.163139e-002, -3.553124e-002, -3.320818e-002, -3.914256e-003, 1.958269e-002, 2.676295e-002, -1.237705e-002, -4.596516e-002, -5.287225e-002, -2.708975e-002, 6.385997e-003, 2.338601e-002, 2.139845e-002, 3.527239e-003, 4.072720e-003, 3.258668e-002, 4.924638e-002, 3.658726e-002, 1.510972e-002, 1.231978e-002, -1.977669e-002, -5.019011e-003, -1.212588e-002, -1.130191e-002, 2.339479e-003, 1.828341e-002, 5.196638e-002, 7.455329e-002, 4.928436e-002, -2.563983e-002, -8.632241e-002, -8.529293e-002, -5.929798e-002, -7.917500e-003, 2.998760e-002, 3.054197e-003, -4.883897e-002, -6.666315e-002, -3.820927e-002, -2.056781e-003, 1.754247e-002, 3.245231e-002, 4.853885e-002, 4.575694e-002, 4.191412e-002, 4.033233e-002, 2.167985e-002, 1.862787e-002, 1.265684e-002, -5.204484e-002, -1.168884e-002, -2.242604e-002, 3.299189e-004, 3.490342e-002, 3.501873e-002, 4.970685e-002, 9.800296e-002, 9.442693e-002, 4.751627e-002, 6.177167e-003, -2.916909e-002, -7.571005e-002, -4.491351e-002, 7.018483e-004, -3.653970e-003, -1.584244e-002, 4.123181e-003, 2.493262e-002, 1.873650e-002, 1.962579e-002, 4.590694e-002, 8.088947e-002, 6.423591e-002, 4.218471e-002, 1.624664e-002, -1.123052e-002, -1.356546e-002, -2.588169e-002, -3.394557e-002, 1.410385e-002, -1.407614e-002, -7.920944e-003, 3.662325e-002, -7.520803e-003, -3.063335e-002, 2.318041e-002, -1.816221e-002, -4.071824e-003, 1.008476e-001, 1.045171e-001, -9.045091e-004, 4.109493e-003, 3.525673e-002, 3.228379e-002, 4.696168e-002, 8.125850e-002, 6.602389e-002, -1.837091e-002, -9.559195e-002, -2.497590e-002, 6.695415e-002, 3.693658e-002, -3.600688e-002, -4.466706e-002, -3.250367e-002, -4.204481e-003, -4.158457e-002, 2.176468e-002, 5.025257e-002, -1.261715e-002, 2.588349e-002, 1.383358e-001, 8.434477e-002, -2.020092e-002, -2.523929e-002, -8.077601e-002, -6.728203e-002, 1.049954e-001, 1.078482e-001, 5.656054e-003, 2.621797e-002, 3.425702e-002, 2.226945e-002, 2.046012e-002, 7.137097e-002, 5.608545e-002, -8.565119e-003, -4.398138e-002, -4.606022e-002, -1.865785e-002, 2.437961e-002, 1.960579e-002, 2.513087e-003, -3.127147e-003, 5.543127e-002, 1.470214e-002, -2.532031e-003, 3.549810e-002, -1.048439e-002, 9.350841e-003, 5.463073e-002, 4.320624e-002, -3.430165e-003, -2.015144e-002, -2.444123e-002, 1.377406e-002, 8.566843e-002, 2.982646e-002, -3.934108e-002, 1.169689e-002, 5.738552e-003, -2.786061e-002, -3.979562e-002, 3.378431e-002, 4.053869e-002, 1.914993e-002, 1.401586e-002, 6.575947e-003, 2.163758e-003, 3.296857e-002, 6.488458e-002, 4.312949e-002, 2.444346e-002, 6.397894e-002, 9.564003e-003, -3.490309e-002, 1.868817e-002, -1.040569e-002, -2.872981e-002, -7.796844e-003, 9.490121e-003, 1.246475e-002, 1.709703e-002, 2.821484e-002, 5.774031e-002, 5.332594e-002, -5.162285e-002, -5.795084e-002, 5.136043e-004, -1.382624e-002, -4.299066e-002, -7.558340e-002, -1.121684e-002, 4.742889e-002, 3.820551e-002, 2.875597e-002, 1.990655e-002, 2.359860e-003, -1.074453e-002, -1.861280e-002, -3.462484e-002, -3.526993e-002, 5.003276e-003, -2.775216e-002, -3.431183e-002, 2.002917e-002, -4.242031e-003, -3.485023e-002, -2.629786e-002, 1.570592e-003, 9.173481e-003, 1.229743e-002, 2.444075e-002, 3.149381e-002, -2.217548e-002, -8.118455e-002, -3.889933e-002, -8.399825e-003, -2.723019e-002, -4.481918e-002, -6.491712e-002, -6.171738e-002, 1.309418e-002, 3.209761e-002, 2.786964e-002,


© ISO/IEC 2004 — All rights reserved

Copyright International Organization for Standardization
Provided by IHS under license with ISO
No reproduction or networking permitted without license from IHS
Not for Resale

1.007803e-002, -1.440943e-002, -3.942594e-002, -5.432613e-002, -6.097002e-002, -4.797192e-002, -2.697243e-002, -5.119554e-002, -3.603438e-002, 2.489916e-002, 4.300586e-003, -3.208564e-002, -3.202667e-002, -1.571734e-002, -1.333222e-002, -9.862540e-003, 5.224035e-003, 5.335089e-003, -5.343609e-002, -4.969205e-002, -3.620809e-003, -7.669376e-003, -2.455314e-002, -2.719233e-002, -2.163120e-002, -6.964137e-002, -4.418618e-002, -5.163946e-003, 1.863480e-002, 1.219066e-002, -1.294874e-002, -3.459403e-002, -4.570768e-002, -3.265231e-002, -1.796822e-002, -1.858686e-002, -4.420091e-002, -2.773748e-002, 3.201205e-002, 1.099124e-004, -4.821988e-002, -4.795622e-002, -3.800036e-002, -3.799748e-002, -3.654047e-002, -2.954939e-002, -3.801494e-002, -3.264175e-002, -3.444872e-003, 1.279526e-002, -4.576059e-004, -1.023881e-002, -1.738561e-003, 2.907892e-002, -2.374379e-002, -9.179738e-002, -8.402854e-002, -4.545031e-002, -1.655286e-002, -1.344639e-002, -2.792648e-002, -2.566964e-002, -1.384212e-002, -4.878406e-003, 8.598106e-003, -1.448581e-002, -1.787601e-002, 2.507324e-002, 7.400221e-006, -7.105572e-002, -1.024815e-001, -1.176581e-001, -1.286771e-001, -1.277890e-001, -9.190838e-002, -3.316270e-002, 1.069511e-002, 1.018621e-002, 3.281763e-003, 1.024841e-002, 6.738147e-003, 1.162306e-002, 4.768497e-002, 3.189670e-002, -4.159458e-002, -1.204253e-001, -1.395327e-001, -1.148526e-001, -8.965885e-002, -6.714835e-002, -4.269396e-002, -1.284274e-002, 1.813276e-002, 3.553258e-002, 6.932146e-003},
{8.510843e-003, 1.180618e-002, 1.568575e-002, 1.695386e-002, 6.816381e-003, -2.407936e-003, -5.573882e-003, -1.164254e-002, -2.299402e-002, -3.369383e-002, -2.942113e-002, -2.222630e-002, -1.083973e-002, 7.144056e-003, 2.224123e-002, 2.202748e-002, 1.027477e-002, 4.129582e-004, -2.741208e-004, -3.119450e-003, -1.290911e-002, -2.191901e-002, -1.953856e-002, -6.185617e-003, -7.036985e-004, -1.867210e-003, -5.298944e-003, 9.476580e-003, 3.589589e-002, -1.268397e-002, -3.666039e-003, -5.106852e-004, -2.048238e-003, -5.571297e-003, -8.672718e-003, -1.997036e-002, -3.598910e-002, -4.682604e-002, -5.801165e-002, -5.932424e-002, -5.185264e-002, -3.688281e-002, -1.280722e-002, 7.372623e-003, 1.281257e-002, 6.738794e-003, -1.004733e-003, -6.215361e-003, -1.038574e-002, -1.070121e-002, -1.573549e-002, -2.488740e-002, -2.796248e-002, -5.506614e-003, 1.200333e-002, 5.707775e-003, -6.604211e-003, 1.015078e-002, -9.711214e-003, -2.316141e-003, 2.948966e-004, 8.671084e-003, 1.023321e-002, 8.674300e-003, -3.240145e-003, -1.342880e-002, -3.062283e-002, -4.731681e-002, -5.446826e-002, -5.073436e-002, -3.397004e-002, -9.405789e-003, 1.134752e-002, 2.130184e-002, 1.896175e-002, 1.276795e-002, 6.219367e-003, 3.693299e-003, 8.247017e-003, 1.147467e-002, 3.522271e-003, -8.444428e-003, -3.945556e-003, 1.772951e-002, 3.367927e-002, 1.280295e-002, 6.112058e-003, -4.733747e-003, -5.984381e-004, 5.707653e-003, 1.408268e-002, 2.094310e-002, 1.916510e-002, 9.246943e-003, -1.452081e-003, -2.284004e-002, -3.890479e-002, -4.979873e-002, -4.767574e-002, -3.091770e-002, -6.534888e-003, 1.340623e-002, 2.538343e-002, 1.711170e-002, 6.059796e-003, 5.660034e-003, 1.051283e-002, 1.621594e-002, 2.648901e-002, 2.302971e-002, 8.540071e-003, 3.377961e-003, 1.672101e-002, 3.524510e-002, 2.565068e-002, 8.165291e-003, 8.888163e-003, 1.609799e-002, 1.453920e-002, 1.366084e-002, 1.691578e-002, 1.294262e-002, -1.999793e-003, -2.133798e-002, -4.060609e-002, -5.477238e-002, -5.820923e-002, -4.674302e-002, -2.573328e-002, -3.960949e-003, 1.035829e-002, 2.053405e-002, 1.462216e-002, 6.177225e-003, 7.544524e-003, 2.008993e-002, 2.755392e-002, 3.479044e-002, 3.276458e-002, 1.321456e-002, 1.270387e-002, 2.510950e-002, 2.940191e-002, 2.112239e-002, 6.717367e-003, 2.146034e-002, 2.023549e-002, 9.184263e-003, 1.148359e-002, 1.474199e-002, 9.445590e-003, -1.544269e-002, -5.095799e-002, -6.689934e-002, -7.529391e-002, -6.951755e-002, -4.921469e-002, -2.739167e-002, -8.264739e-003, 3.354743e-003, 1.563485e-002, 2.153811e-002, 1.734478e-002, 1.985318e-002, 2.506748e-002, 2.980992e-002, 3.669402e-002, 2.866415e-002, 5.984461e-003, 1.510013e-003, 2.444891e-002, 3.765709e-002, 8.237089e-003, -1.044683e-002, 2.287433e-002, 6.769906e-003, 6.912258e-003, 1.702078e-002, 3.090010e-002, 2.197958e-002, -5.762588e-003, -4.588510e-002, -6.664375e-002, -7.082184e-002, -6.095491e-002, -4.204151e-002, -2.554171e-002, -9.574966e-003, 8.871528e-003, 2.718946e-002, 3.727817e-002, 3.783211e-002, 4.560164e-002, 4.634105e-002, 4.870397e-002, 4.170449e-002, 3.044765e-002, 3.316164e-003, -1.772545e-002, -5.297048e-005, 3.525185e-002, 8.037216e-003, -3.581316e-002, 1.158477e-002, -2.821845e-003, 1.570313e-002, 4.632577e-002, 6.057927e-002, 4.064608e-002, 1.148656e-002, -2.380851e-002, -4.130557e-002, -4.406236e-002, -3.842389e-002, -1.722822e-002, -2.850617e-003, 2.192230e-003, 2.821408e-002, 5.124005e-002, 6.765502e-002, 7.146452e-002, 8.232145e-002, 8.683307e-002, 8.134463e-002, 6.128956e-002, 4.001910e-002, 1.413014e-002, -2.034066e-002, -1.726045e-002, 2.583725e-002, 1.752794e-002, -3.947507e-002, 2.810873e-004, -4.772262e-003, 3.706794e-002, 6.568710e-002, 5.789767e-002, 2.877123e-002, 2.670880e-003, -2.224332e-002, -3.788019e-002, -3.425323e-002, -2.414248e-002, -4.837754e-003, 3.709256e-003, 6.601877e-003, 3.220213e-002, 6.408290e-002, 8.494925e-002, 9.232487e-002, 9.870174e-002, 1.011212e-001, 9.477038e-002, 7.349665e-002, 5.098090e-002, 1.855879e-002, -1.284717e-002, -2.498556e-002, 1.754541e-002, 3.009992e-002, -2.877258e-002, -5.866705e-003, -2.527897e-003, 4.041020e-002, 4.869604e-002, 2.630353e-002, -1.215207e-002, -3.549451e-002, -5.042309e-002, -5.172063e-002, -4.161925e-002, -2.639967e-002, -2.381079e-002, -1.932641e-002, -1.385166e-002, 1.402953e-002, 4.294416e-002, 7.066252e-002, 7.731139e-002, 7.394184e-002, 6.869809e-002, 5.215631e-002, 3.336910e-002, 2.290941e-002, 2.147377e-003, -1.870683e-002, -2.681389e-002, 8.011715e-003,

© ISO/IEC 2004 — All rights reserved


Copyright International Organization for Standardization
Provided by IHS under license with ISO
No reproduction or networking permitted without license from IHS
Not for Resale

3.477768e-002, -2.617579e-002, 1.426489e-004, 3.375627e-003, 2.179181e-002, 1.044174e-002, -2.685465e-002, -5.739964e-002, -6.732819e-002, -6.665687e-002, -5.210468e-002, -3.943201e-002, -3.086587e-002, -3.575252e-002, -4.440272e-002, -3.850729e-002, -1.465749e-002, 4.813654e-003, 2.933475e-002, 3.752339e-002, 3.030467e-002, 2.187010e-002, 3.584226e-003, -6.615693e-003, -1.497982e-002, -2.147610e-002, -2.703671e-002, -2.725942e-002, -6.198441e-003, 2.173185e-002, -2.985263e-002, 1.438289e-003, -7.219601e-003, -1.377342e-002, -3.569132e-002, -6.301381e-002, -7.144531e-002, -5.823402e-002, -3.402302e-002, -1.069902e-002, -2.985975e-004, -1.144809e-002, -3.179187e-002, -4.673138e-002, -4.318198e-002, -3.058286e-002, -1.336030e-002, 6.741430e-003, 2.043215e-002, 1.707127e-002, 1.025512e-002, 8.695291e-004, -8.444664e-003, -1.675861e-002, -2.205155e-002, -1.121404e-002, -3.629707e-003, -1.028639e-002, -2.644964e-003, -4.272872e-002, -4.582748e-003, -2.078915e-002, -3.764206e-002, -5.437389e-002, -6.490149e-002, -5.691166e-002, -2.950255e-002, 2.374095e-003, 2.521698e-002, 2.784088e-002, 7.384636e-003, -1.955384e-002, -3.688270e-002, -3.713805e-002, -2.838092e-002, -1.238595e-002, 6.982832e-003, 2.945613e-002, 3.457103e-002, 3.574231e-002, 3.096303e-002, 2.461342e-002, 1.492390e-002, 9.869788e-003, 1.952170e-002, 3.284666e-002, 1.246382e-002, -1.215683e-002, -4.825771e-002, -5.456374e-003, -1.745998e-002, -3.421921e-002, -4.540570e-002, -6.096235e-002, -6.738086e-002, -5.747126e-002, -3.579224e-002, -4.431671e-003, 1.743106e-002, 7.063616e-003, -9.629318e-003, -2.471037e-002, -2.857782e-002, -2.380432e-002, -1.130607e-002, 8.253164e-003, 3.029486e-002, 3.580742e-002, 2.408466e-002, 9.634846e-003, -2.988041e-003, -9.264181e-003, -7.549002e-003, 8.047055e-003, 4.205237e-002, 2.547827e-002, -1.388140e-002, -4.898923e-002, 2.295144e-003, 6.984179e-003, -1.677450e-003, -1.308561e-002, -3.416868e-002, -3.498543e-002, -1.322355e-002, 1.199777e-002, 2.909505e-002, 3.237536e-002, 8.115082e-003, -9.908824e-003, -1.621974e-002, -1.640315e-002, -1.282449e-002, -2.269899e-003, 1.055175e-002, 2.790931e-002, 2.778483e-002, 8.787199e-003, -1.334810e-002, -3.835067e-002, -6.537876e-002, -6.684751e-002, -4.752486e-002, 2.664236e-003, 1.405502e-002, -1.727441e-002, -2.878047e-002, 4.504662e-003, 2.091264e-002, 6.873370e-003, -1.390018e-002, -3.298653e-002, -2.291201e-002, 5.065689e-003, 3.119273e-002, 4.736005e-002, 4.698854e-002, 2.155992e-002, -2.451621e-002, -3.507763e-002, -2.428909e-002, -1.839070e-002, -1.697649e-002, -1.607914e-002, 1.254178e-003, 2.706612e-002, 3.932843e-002, 4.016388e-002, 1.196782e-002, -3.328642e-002, -7.123310e-002, -7.275678e-002, -3.137059e-002, -1.999760e-004, -2.306474e-002, -2.325316e-003, -1.395539e-002, -2.725515e-002, -3.600468e-002, -2.687605e-002, -1.974526e-002, -1.921574e-002, -2.661551e-002, -3.450392e-002, -2.600356e-002, -1.430699e-002, -7.356437e-003, -3.431487e-002, -4.724715e-002, -4.064646e-002, -3.712411e-002, -5.398594e-002, -6.378861e-002, -4.882515e-002, -1.699698e-002, 2.033791e-002, 4.166823e-002, 2.624942e-002, -1.739761e-002, -6.034320e-002, -6.647775e-002, -2.585441e-002, 2.120458e-002, -2.573600e-003, 3.844896e-002, -2.657455e-002, -3.629551e-002, -2.875766e-002, 1.774584e-002, 4.040930e-002, 2.139284e-002, -1.576490e-002, -3.995899e-002, -2.683387e-002, 2.440966e-003, 3.122019e-002, 1.557788e-002, -2.800885e-002, -4.744938e-002, -6.692526e-002, -8.305836e-002, -7.184532e-002, -4.248203e-002, -8.152218e-003, 2.502380e-002, 2.607051e-002, 3.914127e-003, -2.827400e-002, -5.401467e-002, -5.098201e-002, -3.240998e-002, -1.562463e-002, -2.389791e-002, 6.027685e-002, -7.862855e-003, -4.352658e-003, 1.796794e-002, 8.621632e-002, 7.871885e-002, 5.438436e-003, -3.591302e-002, -3.965375e-002, -2.717007e-002, 2.072149e-002, 7.303853e-002, 7.382738e-002, -1.430515e-003, -6.654574e-002, -1.034891e-001, -9.236987e-002, -2.747953e-002, 4.007064e-003, 3.616014e-002, 4.522902e-002, 2.633782e-002, 7.670630e-003, -1.810437e-002, -6.016875e-003, 3.888300e-002, 4.763809e-002, -1.198568e-002, -6.236979e-002, 3.397845e-002, 9.364782e-003, 2.062417e-002, 8.918756e-003, 4.149176e-002, 2.967654e-002, -2.303437e-002, 2.050090e-002, 5.945986e-002, 2.992266e-002, -3.405571e-003, 1.055863e-002, 2.885313e-002, -2.016097e-002, -7.211059e-002, -9.403371e-002, -5.881680e-002, 3.216197e-003, -7.629223e-003, -1.478778e-002, 5.263131e-003, 2.125829e-002, -1.708795e-002, -4.534937e-002, -1.352768e-002, 5.368138e-002, 8.216178e-002, 3.216187e-002, -5.094184e-002, 1.439285e-002, 7.381197e-003, -6.207816e-003, -7.857710e-002, -7.181094e-002, 6.867192e-003, -3.592918e-003, 7.521379e-004, 6.723296e-002, 3.558267e-002, -4.721153e-002, -4.664682e-002, -3.576081e-002, -2.844126e-002, -4.958167e-003, -1.206404e-003, -7.814357e-005, -3.606035e-003, -4.466254e-002, -6.571121e-002, -2.014598e-002, 3.266135e-002, -7.926133e-003, -9.368219e-003, 1.833891e-002, -1.002017e-002, 1.240517e-002, 1.979424e-002, -2.058393e-002, 3.717396e-002, -2.135359e-002, -2.573710e-002, -8.426866e-002, -5.462518e-002, 2.785668e-002, 5.533039e-002, 5.323228e-002, 3.937804e-002, -1.300976e-002, -5.627661e-002, -5.739812e-002, -3.901894e-002, -2.163546e-002, 3.360781e-002, 5.761390e-002, 3.568391e-002, -3.347923e-004, -2.101207e-002, -4.778884e-002, -2.335274e-002, -8.014270e-003, -1.030055e-002, -2.374877e-002, -3.009280e-002, -2.544224e-002, -1.500400e-002, -2.560343e-003, -6.553612e-003, 4.093886e-002, -2.166559e-002, -2.606481e-003, -4.232517e-002, -1.053585e-002, 7.297082e-002, 1.295793e-001, 1.342853e-001, 9.690039e-002, 4.484317e-002, -1.538405e-003, -1.140212e-002, -8.224802e-003, -8.621584e-003, 4.412551e-002, 5.739716e-002, 4.080881e-002, -1.820560e-003, 1.798519e-002, 2.062778e-002, 2.458504e-002, 3.745617e-002, 4.037356e-002, 2.077072e-002, -8.697714e-004, -3.650463e-003, -1.215801e-003, -3.530626e-003, -9.838928e-003, 2.092561e-002, -9.427477e-003, 2.762532e-002, -1.625437e-003, 8.340671e-004, 6.082108e-002,


© ISO/IEC 2004 — All rights reserved

Copyright International Organization for Standardization
Provided by IHS under license with ISO
No reproduction or networking permitted without license from IHS
Not for Resale

1.103531e-001, 1.211314e-001, 9.851916e-002, 6.957625e-002, 5.204832e-002, 4.785334e-002, 9.291932e-004, 8.901955e-003, 3.920488e-002, 3.344958e-002, 2.056571e-002, -8.248367e-003, -5.467278e-003, 4.714865e-002, 3.996000e-002, 2.880560e-002, 2.353111e-002, 1.138333e-002, -5.898826e-003, -1.199787e-002, 5.593171e-004, 1.535493e-002, 1.342265e-002, 1.115895e-002, 5.245348e-003, 5.905321e-002, 2.411202e-002, -4.782947e-004, 3.777059e-002, 7.466705e-002, 8.872699e-002, 8.328905e-002, 7.771426e-002, 7.065762e-002, 4.473803e-002, -5.983249e-003, 7.782556e-003, 2.189052e-002, 8.396686e-003, -1.606377e-002, -1.695984e-002, -3.294233e-002, -5.364633e-003, 2.608629e-002, 1.321017e-002, -1.038743e-002, -2.695329e-002, -3.644004e-002, -2.687936e-002, 7.681737e-003, 3.907414e-002, 3.391192e-002, 1.378311e-002, 1.803835e-002, 7.733555e-002, 5.041256e-002, 2.083689e-003, 1.491684e-002, 2.581601e-002, 3.193207e-002, 3.322143e-002, 3.556923e-002, 3.337487e-002, 1.336417e-002, -4.800886e-003, 1.228084e-002, 2.908522e-002, 5.230253e-003, -2.978038e-002, -2.464755e-002, -2.614757e-002, -3.789347e-002, -3.787563e-002, -3.002963e-002, -4.415727e-002, -6.092842e-002, -6.757589e-002, -3.838904e-002, 4.304361e-003, 4.089391e-002, 3.796656e-002, 1.985673e-002, 2.386888e-002, 6.874451e-002, 5.904417e-002, 1.714079e-002, 1.303853e-002, 7.886572e-003, 3.990058e-003, 6.176035e-003, 1.370162e-002, 1.271987e-002, 2.046867e-003, 1.038657e-002, 4.859760e-002, 6.721057e-002, 3.390218e-002, -4.804552e-003, -8.309241e-003, -6.735857e-003, -2.094855e-002, -4.351580e-002, -5.707040e-002, -7.276542e-002, -8.026406e-002, -7.271854e-002, -3.749773e-002, 8.400381e-003, 3.636563e-002, 3.575010e-002, 2.013656e-002},
{1.037022e-002, -8.669991e-003, -4.266605e-003, 1.464423e-002, -8.891129e-004, -2.375351e-002, -2.491128e-002, -5.606885e-003, 1.095222e-002, 6.535335e-003, -5.938281e-003, -7.109259e-003, 2.281835e-004, 1.108622e-002, 2.970374e-002, 3.803684e-002, 4.298856e-002, 3.966969e-002, 3.153530e-002, 2.045986e-002, 5.809401e-003, -5.988228e-003, -7.253223e-003, -5.603131e-003, -7.976332e-003, -1.652574e-002, -3.315642e-002, -1.546373e-002, 6.018364e-002, -2.587520e-002, -1.457752e-002, 4.714464e-003, -6.153512e-003, -2.213842e-002, -2.580393e-002, -8.938668e-003, -5.262560e-003, -1.449003e-002, -3.412130e-002, -3.972599e-002, -3.251386e-002, -1.773501e-002, -6.435174e-004, 2.059716e-002, 2.634116e-002, 2.634457e-002, 2.420448e-002, 1.715847e-002, 1.319879e-002, 2.808696e-003, -5.765341e-003, -1.807348e-002, -3.178201e-002, -1.588861e-002, 1.323588e-004, -2.185736e-002, -3.983479e-002, -4.181893e-003, -7.827785e-003, 1.946372e-002, 8.762201e-003, -3.202902e-003, -4.048416e-003, 2.542921e-003, 2.876748e-003, -7.904782e-003, -3.093002e-002, -4.442834e-002, -3.789467e-002, -1.847183e-002, 5.995022e-003, 2.787128e-002, 4.277658e-002, 3.903757e-002, 3.010422e-002, 1.947532e-002, 1.471949e-002, 9.849171e-003, -2.771481e-003, -1.282188e-002, -1.146566e-002, -2.111758e-002, -2.628308e-002, 6.533527e-004, 2.132731e-002, -1.130676e-003, -1.177499e-002, 8.096047e-003, 1.240937e-002, 5.693509e-003, 1.084679e-002, 9.536389e-003, 1.022795e-002, 8.005245e-003, -1.475634e-002, -3.813738e-002, -4.050057e-002, -3.014423e-002, -1.136328e-002, 1.888996e-002, 4.047420e-002, 5.288479e-002, 4.439104e-002, 2.926659e-002, 1.722776e-002, 1.463027e-002, 5.058791e-003, -1.372567e-002, -2.871255e-002, -1.724774e-002, 2.576238e-003, -5.369806e-003, -9.610597e-003, 1.332078e-002, 3.280584e-002, 1.415571e-002, -5.209572e-004, 9.980610e-004, 7.149577e-003, 1.053970e-002, 8.051307e-003, 1.406453e-002, 1.487531e-002, -1.214376e-002, -4.261318e-002, -4.653432e-002, -3.496097e-002, -1.166529e-002, 1.892372e-002, 3.763968e-002, 3.715286e-002, 2.643423e-002, 1.641130e-002, 1.494672e-002, 1.423683e-002, 6.256727e-003, -1.289899e-002, -2.982508e-002, -2.645574e-002, -4.638843e-003, 1.426705e-002, 8.422151e-003, 1.782667e-003, 1.326938e-002, 2.526430e-002, -1.086098e-002, -5.390305e-003, 4.764547e-003, 9.782123e-004, 8.138656e-003, 2.120935e-002, 1.573260e-002, -7.565811e-003, -3.819024e-002, -4.414206e-002, -2.711526e-002, 2.362969e-003, 2.710856e-002, 3.192969e-002, 2.213881e-002, 7.655309e-003, 5.023132e-003, 1.558912e-002, 2.084973e-002, 2.058958e-002, 9.479144e-003, -5.572647e-003, -1.362822e-002, -5.604859e-003, 1.126982e-002, 1.525684e-002, -7.998466e-004, -4.520341e-003, 1.039556e-002, -1.790990e-002, -7.621552e-003, -5.989064e-003, -1.343148e-002, -1.337422e-004, 7.134985e-003, -3.756797e-003, -2.202885e-002, -4.159275e-002, -3.645530e-002, -8.550698e-003, 2.233851e-002, 3.862378e-002, 3.719186e-002, 1.628601e-002, -1.292454e-003, 5.731016e-003, 2.170505e-002, 3.188923e-002, 3.555330e-002, 2.130275e-002, 1.654266e-003, -9.657847e-003, -6.690373e-003, 5.428985e-004, -2.312649e-003, -1.311027e-002, -2.237802e-002, -8.059754e-003, -1.682372e-002, -1.459104e-002, -1.427062e-002, -2.687192e-002, -1.823248e-002, -1.858355e-002, -3.329486e-002, -4.690573e-002, -5.254215e-002, -3.343640e-002, -3.525496e-003, 3.081043e-002, 4.515170e-002, 3.884579e-002, 1.330936e-002, -3.845439e-003, 7.159432e-003, 2.755297e-002, 3.628246e-002, 3.588505e-002, 1.178476e-002, -2.000604e-002, -3.912485e-002, -3.524393e-002, -1.765305e-002, -2.886562e-002, -3.944585e-002, -3.505028e-002, -1.298940e-002, -1.099083e-002, -1.227140e-002, -2.406126e-002, -3.439585e-002, -3.259257e-002, -3.641311e-002, -4.528647e-002, -5.648852e-002, -5.663165e-002, -2.990082e-002, -7.295986e-004, 3.191419e-002, 4.531225e-002, 4.507987e-002, 2.337835e-002, 6.495386e-003, 1.964214e-002, 3.603459e-002, 3.848132e-002, 2.964968e-002, -2.178480e-003, -4.472129e-002, -6.959009e-002, -7.019047e-002, -4.568667e-002, -4.118829e-002, -5.014080e-002, -3.517376e-002, -3.048387e-003, 2.051353e-003, 5.235085e-003, -1.833848e-002, -3.167107e-002, -4.153924e-002, -4.553440e-002, -4.747800e-002, -5.534393e-002, -5.429994e-002, -3.312120e-002, -4.143773e-003,

© ISO/IEC 2004 — All rights reserved


Copyright International Organization for Standardization
Provided by IHS under license with ISO
No reproduction or networking permitted without license from IHS
Not for Resale

2.604751e-002, 3.731294e-002, 4.077184e-002, 2.529929e-002, 1.542976e-002, 3.078684e-002, 4.356283e-002, 4.515136e-002, 3.682449e-002, 2.493087e-003, -4.510072e-002, -7.840566e-002, -8.335411e-002, -5.870045e-002, -3.892269e-002, -3.930181e-002, -2.878241e-002, 1.473879e-002, 1.966867e-002, 1.641113e-002, -7.875492e-003, -2.463760e-002, -4.109031e-002, -4.269011e-002, -4.403111e-002, -4.397400e-002, -3.864040e-002, -2.756717e-002, -7.564711e-003, 1.444474e-002, 2.244289e-002, 2.582000e-002, 2.010395e-002, 1.946640e-002, 3.993589e-002, 5.901996e-002, 6.380126e-002, 5.616091e-002, 2.737565e-002, -2.000466e-002, -5.593451e-002, -6.501689e-002, -4.555544e-002, -1.778443e-002, -1.475737e-002, -1.361527e-002, 2.635382e-002, 3.018573e-002, 2.731478e-002, 6.578125e-003, -1.207482e-002, -2.742574e-002, -2.734074e-002, -2.318533e-002, -1.118529e-002, -1.074029e-002, -1.616350e-002, -1.258823e-002, 2.671676e-003, 1.422267e-002, 1.969360e-002, 1.887872e-002, 2.693917e-002, 4.780743e-002, 6.442189e-002, 7.196972e-002, 6.871914e-002, 5.118264e-002, 1.291881e-002, -1.698388e-002, -3.415588e-002, -1.892320e-002, 1.115502e-002, 1.832275e-002, 8.658252e-003, 3.526002e-002, 3.437298e-002, 2.650401e-002, 9.244667e-003, -2.337539e-003, -4.701459e-003, 3.644431e-003, 1.059507e-002, 2.021627e-002, 1.245954e-002, 2.675092e-004, -1.068501e-002, -1.048564e-002, 5.425658e-004, 6.865458e-003, 1.057131e-002, 2.309079e-002, 4.204017e-002, 5.056369e-002, 5.751615e-002, 5.935440e-002, 4.792298e-002, 2.301370e-002, -5.004986e-005, -1.161689e-002, -6.829894e-003, 1.446840e-002, 2.516692e-002, 2.091948e-002, 3.529560e-002, 3.140086e-002, 1.625290e-002, 7.104705e-003, 1.178469e-002, 2.310031e-002, 3.518588e-002, 4.022866e-002, 3.851685e-002, 3.281490e-002, 1.571623e-002, -4.463104e-003, -1.644255e-002, -1.246620e-002, -6.184064e-003, -1.777601e-003, 9.461367e-003, 2.347481e-002, 2.598355e-002, 1.570532e-002, 3.578862e-003, 6.998020e-003, 1.443167e-002, 2.617758e-002, 2.998893e-002, 2.398222e-002, 2.047100e-002, 1.807540e-002, 1.283673e-002, 2.924201e-002, 1.174832e-002, -3.865100e-003, 1.601621e-002, 4.406090e-002, 5.628292e-002, 4.057902e-002, 1.975507e-002, 6.310023e-003, 1.968459e-002, 2.500612e-002, 1.270245e-002, -1.257878e-002, -1.945206e-002, -1.283573e-002, -4.380880e-003, -1.467780e-003, 3.621589e-003, 4.492764e-003, -1.418316e-002, -2.118174e-002, -1.294960e-002, 1.686632e-002, 5.305114e-002, 7.996050e-002, 7.856268e-002, 4.818198e-002, 1.929509e-002, 4.320144e-003, 1.424406e-002, -1.647284e-002, -2.217690e-002, 2.868963e-002, 8.341148e-002, 9.294085e-002, 4.528008e-002, -1.072913e-002, -3.581834e-002, -2.111225e-002, 1.186577e-002, 1.904474e-002, -6.571168e-003, -3.027735e-002, -3.016359e-002, -1.414543e-002, 1.575771e-004, 1.402109e-002, 3.582399e-002, 2.900227e-002, 7.541384e-003, -1.891081e-002, -1.910663e-002, 4.877772e-003, 4.521175e-002, 6.331304e-002, 4.182150e-002, 9.003354e-003, -3.466582e-003, -5.836711e-003, -3.762775e-002, -2.955870e-002, 5.007130e-002, 1.373209e-001, 1.469083e-001, 1.070834e-001, 5.072602e-002, -8.107842e-003, -3.982721e-002, -3.220332e-002, -2.336496e-004, -6.641502e-003, -3.066629e-002, -3.880750e-002, -2.926428e-002, 4.243657e-003, 3.428398e-002, 4.711595e-002, 3.270302e-002, 4.802757e-003, -1.976763e-005, 2.742549e-002, 6.165339e-002, 9.074009e-002, 9.933548e-002, 7.645332e-002, 1.705097e-002, -1.271418e-002, -1.737121e-002, -3.507086e-002, -4.217555e-002, 9.122951e-003, 5.592440e-002, 3.902235e-002, 1.058775e-002, -2.376927e-002, -5.604821e-002, -8.101005e-002, -7.517292e-002, -4.180871e-002, -2.168085e-003, 9.173522e-003, -4.549730e-003, -7.031187e-003, 7.839404e-003, -9.681979e-004, -2.780189e-002, -4.044092e-002, -4.072858e-002, -2.593029e-002, -2.064630e-002, 2.361700e-003, 2.000264e-002, 3.654749e-002, 4.569288e-002, 2.480515e-002, -1.644722e-002, -2.215793e-002, 1.111524e-002, -3.607351e-002, -7.611350e-002, -5.538610e-002, -3.771744e-002, -4.434021e-002, -3.260148e-002, 7.884248e-003, 1.400326e-002, -1.934520e-002, -2.128056e-002, -2.820443e-003, 6.657303e-002, 8.366187e-002, 6.411152e-002, 2.806085e-002, -2.963600e-002, -6.465773e-002, -6.227132e-002, -1.437551e-002, -2.360986e-002, -6.546989e-002, -7.777700e-002, -8.270591e-002, -9.907884e-002, -6.916849e-002, -2.262451e-002, -5.082410e-003, -4.707487e-003, 7.138409e-002, 2.659522e-002, -4.966988e-002, -5.385868e-002, -2.100053e-002, 5.448131e-004, -1.206510e-002, 1.430958e-002, 4.409187e-003, 4.847967e-002, 6.024501e-002, 1.891335e-003, 5.255626e-002, 6.877346e-002, 4.774791e-002, 4.181455e-002, 8.016601e-003, -1.802610e-002, -2.446131e-003, 4.678039e-002, -2.533709e-002, -4.508920e-002, -1.962605e-002, -1.254491e-002, -1.012033e-001, -9.055555e-002, -2.890257e-002, 3.236512e-002, 6.002316e-002, 4.507420e-002, 6.352836e-002, -1.264478e-002, -3.650258e-002, -6.786777e-002, -2.264386e-002, 1.532407e-002, -4.082752e-002, -1.268089e-001, 4.682585e-003, 6.157228e-002, 6.740173e-003, 5.744134e-002, 3.817727e-002, 8.332864e-003, 3.889276e-002, 8.160440e-002, 2.931826e-002, 2.629691e-003, -5.312645e-002, -1.218049e-001, -3.393314e-002, 1.302136e-002, -4.199314e-002, -9.372881e-002, -6.061218e-002, -6.808183e-003, 4.964913e-002, 8.650018e-002, -3.531947e-002, 1.650961e-002, -3.551018e-003, 1.571417e-002, 6.274826e-003, -1.881362e-002, -2.548683e-002, -5.623624e-002, -4.303271e-002, 2.662983e-002, 3.868677e-002, 3.393010e-002, 8.657993e-002, 2.356338e-002, -1.291884e-002, 2.297284e-002, 1.170371e-001, 6.457109e-002, 2.350392e-002, -2.799045e-002, -7.351179e-002, -2.950684e-002, -7.786967e-003, -2.504032e-002, 7.081139e-003, 1.706279e-002, -9.154355e-004, -3.080357e-003, 2.788457e-002, -6.834360e-002, -5.222300e-003, 1.498507e-002, 2.673148e-002, -1.582707e-003, -4.519846e-002, -7.532666e-002, -6.852620e-002, -1.480405e-002, 3.979521e-002, 2.510393e-002, 3.854050e-002, 8.309300e-002, 2.065331e-002, -1.105530e-002, 1.348206e-002, 1.030519e-001, 9.454616e-002,


© ISO/IEC 2004 — All rights reserved

Copyright International Organization for Standardization
Provided by IHS under license with ISO
No reproduction or networking permitted without license from IHS
Not for Resale

5.578378e-002, 4.440118e-003, -5.838078e-002, -8.435021e-002, -8.136650e-002, -5.845775e-002, 1.029376e-003, 3.383099e-002, -2.232629e-003, -3.906292e-002, -1.365959e-002, -5.512874e-002, -1.886441e-002, 2.106898e-002, 2.989794e-002, -6.589461e-003, -4.694205e-002, -6.044214e-002, -3.135609e-002, 1.539659e-002, 3.035844e-002, 1.435999e-002, 4.750489e-002, 5.615129e-002, 2.052734e-002, -8.320940e-003, 8.001428e-003, 5.091393e-002, 7.410325e-002, 3.594421e-002, 2.683603e-002, -9.362360e-003, -5.209649e-002, -7.101798e-002, -5.149652e-002, 7.911487e-003, 3.838886e-002, -1.491347e-003, -4.524624e-002, -2.483447e-002, -2.083254e-002, -1.367286e-002, 3.760492e-003, 6.798325e-003, -1.300873e-002, -3.177632e-002, -2.500197e-002, 8.224601e-004, 2.149888e-002, 1.874466e-002, 1.983390e-002, 3.022089e-002, 2.761225e-002, 9.894546e-003, -8.445074e-003, 1.467695e-002, 1.529571e-002, 1.391480e-002, 1.355074e-003, -8.663939e-003, -8.955405e-003, -3.052932e-002, -5.081866e-002, -4.063460e-002, 2.287812e-003, 3.000025e-002, -4.399128e-003, -4.379793e-002, -1.301746e-002, 7.719379e-003, 1.221335e-002, -1.057212e-003, -1.729152e-002, -2.649775e-002, -2.497658e-002, -7.255618e-003, 9.539911e-003, 1.499003e-002, -6.292622e-003, -2.241256e-002, -1.327602e-002, 5.939376e-003, -1.983666e-002, -4.092159e-002, -5.840620e-003, -4.012565e-003, -4.051862e-002, -5.531766e-002, -4.303408e-002, -2.984985e-002, -2.658084e-002, -3.028963e-002, -2.599767e-002, -2.474656e-004, 1.581343e-002, -5.883637e-003, -1.845323e-002, -5.010893e-003, 2.100436e-002, 2.887493e-002, 1.784617e-002, -1.662482e-002, -1.728240e-002, -1.065565e-002, 1.349715e-003, 7.405850e-003, -8.504156e-003, -5.612526e-002, -8.174751e-002, -5.396129e-002, -3.431431e-002, -7.523910e-002, -1.081146e-001, -6.768054e-002, -3.671083e-002, -6.514906e-002, -1.122760e-001, -9.906177e-002, -5.222678e-002, -2.942597e-002, -2.377919e-002, -1.384237e-002, 8.064236e-003, 2.152210e-002, 1.085704e-002, -1.391907e-004, -4.001811e-003},
{3.643858e-002, -2.195025e-002, -3.406748e-002, -2.198044e-002, -1.590180e-002, -8.587373e-003, 8.338207e-003, 2.949993e-002, 4.450092e-002, 4.137244e-002, 2.735049e-002, 1.770055e-002, 8.185382e-003, 1.146797e-003, -4.580566e-003, -1.282932e-002, -1.524396e-002, -1.404260e-002, -2.025179e-003, 3.586785e-003, 9.358644e-004, -2.046060e-003, 2.500863e-005, -4.470621e-003, -1.091629e-002, -1.725921e-002, -2.362047e-002, -4.835988e-003, 2.292958e-002, 4.358530e-002, 1.334245e-002, 3.393421e-002, 3.003910e-002, 1.610301e-002, 1.380587e-002, 3.871241e-002, 5.417819e-002, 5.533871e-002, 4.052984e-002, 2.933097e-002, 2.921011e-002, 3.648218e-002, 4.777802e-002, 4.935108e-002, 4.184425e-002, 2.963743e-002, 2.752321e-002, 4.335562e-002, 6.161978e-002, 5.541402e-002, 4.173626e-002, 3.517055e-002, 4.540049e-002, 5.511080e-002, 5.607515e-002, 3.742924e-002, 2.906444e-002, 4.355618e-002, -2.442643e-003, 7.566180e-003, 2.268270e-002, -4.847290e-003, -2.753408e-002, -2.287684e-002, -9.824534e-003, -1.216065e-002, -2.357275e-002, -3.510612e-002, -2.488395e-002, 3.572583e-004, 2.474529e-002, 4.248178e-002, 4.778382e-002, 3.184671e-002, 1.184103e-002, 3.415471e-003, 6.411772e-003, 1.683232e-002, 1.154684e-002, 2.877477e-003, -6.732049e-003, -1.113129e-003, 2.435835e-002, 4.809827e-002, 3.194791e-002, 1.700526e-002, 2.533586e-002, -2.910451e-002, -6.973959e-004, 1.709130e-003, -2.353807e-002, -3.953904e-002, -3.903119e-002, -4.728681e-002, -5.497277e-002, -6.016072e-002, -5.547527e-002, -2.869754e-002, 7.728607e-003, 3.672305e-002, 5.432280e-002, 5.692990e-002, 4.270064e-002, 3.104697e-002, 2.350614e-002, 1.319312e-002, 5.443786e-003, -4.331858e-003, -2.255262e-002, -3.308419e-002, -3.168230e-002, -2.182554e-002, 2.108195e-003, 1.796582e-002, -2.672631e-003, 1.229927e-003, -2.924153e-002, 3.775293e-003, 3.180538e-003, -6.256710e-003, -6.467837e-003, -1.824702e-002, -3.979930e-002, -5.057536e-002, -5.560132e-002, -4.943522e-002, -2.852665e-002, 1.382275e-003, 2.693410e-002, 3.826939e-002, 4.295612e-002, 3.576294e-002, 3.911059e-002, 4.748060e-002, 4.075070e-002, 2.439405e-002, 1.426953e-002, -1.926698e-003, -1.883111e-002, -2.283231e-002, -2.332997e-002, -2.031835e-002, -4.622159e-004, -2.595830e-002, -3.562509e-002, -1.530687e-002, 1.351756e-002, 1.095121e-002, 1.641497e-002, 2.338481e-002, 1.591137e-002, -1.247092e-002, -3.306239e-002, -5.163621e-002, -6.390584e-002, -6.042238e-002, -4.440603e-002, -2.295889e-002, -6.729853e-003, 2.908260e-003, -1.024013e-004, 9.802291e-003, 3.053436e-002, 3.712512e-002, 2.311702e-002, 1.123914e-002, -8.375540e-004, -6.211792e-003, -8.807978e-004, -6.971234e-003, -1.454025e-002, 1.146594e-003, -2.296440e-002, -6.288809e-002, 5.614978e-003, 9.598707e-003, 6.094776e-003, 2.606078e-002, 4.534027e-002, 3.615473e-002, 1.456675e-003, -2.377775e-002, -5.767963e-002, -8.475911e-002, -8.684862e-002, -7.539349e-002, -6.060372e-002, -4.548822e-002, -3.953685e-002, -4.008203e-002, -2.852726e-002, -7.302629e-003, 1.822991e-003, -1.033274e-002, -3.242621e-002, -4.077222e-002, -3.141751e-002, -6.955649e-003, 2.608010e-003, -3.125190e-003, 3.725294e-003, 1.018035e-002, -4.574516e-002, 1.186457e-002, -6.252097e-003, -4.504369e-003, 3.222573e-002, 5.732847e-002, 4.406634e-002, 1.151052e-002, -2.387149e-002, -6.364790e-002, -8.330084e-002, -8.352947e-002, -7.781987e-002, -6.452438e-002, -4.801752e-002, -4.944722e-002, -6.107270e-002, -5.512772e-002, -3.374986e-002, -2.386206e-002, -4.116672e-002, -7.087355e-002, -7.869260e-002, -6.333555e-002, -2.367680e-002, 6.659513e-004, -4.186674e-003, 2.514598e-003, 2.661820e-002, -7.701160e-003, 2.738672e-003, -2.782566e-002, -1.556336e-003, 3.536004e-002, 5.106006e-002, 4.407236e-002, 1.866256e-002, -1.402183e-002, -4.379478e-002, -6.300994e-002, -6.252973e-002, -5.141062e-002, -4.012937e-002, -2.172316e-002, -2.480952e-002, -4.670620e-002, -5.214720e-002, -4.002033e-002, -3.086106e-002, -4.161498e-002, -6.875776e-002, -8.783328e-002, -7.596426e-002, -3.242689e-002,

© ISO/IEC 2004 — All rights reserved


Copyright International Organization for Standardization
Provided by IHS under license with ISO
No reproduction or networking permitted without license from IHS
Not for Resale

6.710324e-003, 3.337500e-003, -5.030176e-003, 1.526399e-002, 1.846510e-002, -8.423693e-003, -3.331642e-002, -2.742460e-003, 2.813397e-002, 3.636060e-002, 3.458545e-002, 2.043122e-002, -5.240797e-003, -2.522861e-002, -3.798555e-002, -3.346146e-002, -1.239988e-002, 8.351809e-003, 2.262695e-002, 1.825412e-002, -4.588261e-003, -2.306835e-002, -1.969293e-002, -1.345984e-002, -1.821578e-002, -2.852325e-002, -3.734196e-002, -2.831412e-002, 3.383301e-003, 4.189105e-002, 3.529390e-002, -1.506871e-003, -1.002795e-002, 1.137156e-002, -1.137290e-002, -3.075716e-002, -9.907985e-003, 9.658793e-003, 1.658342e-002, 1.752706e-002, 9.996549e-003, 1.439390e-003, -5.483246e-003, -7.548659e-003, 2.221222e-003, 2.875940e-002, 5.545914e-002, 6.763830e-002, 5.821764e-002, 4.394461e-002, 2.721657e-002, 1.988714e-002, 2.388491e-002, 1.719179e-002, 1.770350e-002, 2.216578e-002, 2.786962e-002, 4.970714e-002, 7.790898e-002, 7.360469e-002, 2.369254e-002, -1.799911e-002, -6.556119e-003, 7.260832e-004, -2.072400e-002, -2.157225e-002, -1.662272e-002, -1.266944e-002, -9.328754e-003, -5.821380e-003, 3.185162e-003, 1.271751e-002, 1.913132e-002, 3.316163e-002, 6.112584e-002, 9.001669e-002, 9.769033e-002, 8.678991e-002, 7.359054e-002, 6.152043e-002, 4.700012e-002, 4.697407e-002, 3.737957e-002, 2.696815e-002, 2.346620e-002, 3.017051e-002, 4.828110e-002, 7.258312e-002, 7.303698e-002, 3.820585e-002, -9.548799e-003, -2.271119e-002, 2.190271e-002, -6.965512e-003, -3.877354e-002, -5.335354e-002, -4.908259e-002, -3.892523e-002, -2.426100e-002, 2.580282e-003, 1.916265e-002, 2.969517e-002, 4.216186e-002, 6.893195e-002, 9.771828e-002, 1.072809e-001, 9.635419e-002, 8.197320e-002, 6.846186e-002, 4.254059e-002, 2.418711e-002, 1.546679e-003, -2.252094e-002, -4.161264e-002, -3.718550e-002, -2.226803e-002, 3.064709e-003, 1.965714e-002, 1.842937e-002, 1.197178e-003, -1.683417e-002, 3.617593e-002, -2.590466e-003, -4.881791e-002, -5.115698e-002, -2.386891e-002, -4.326787e-003, 1.076639e-003, 6.219801e-003, -2.157297e-003, -2.607792e-004, 1.824727e-002, 5.037779e-002, 8.366896e-002, 9.758808e-002, 9.000340e-002, 6.923865e-002, 4.918042e-002, 8.027730e-003, -2.315318e-002, -4.628908e-002, -6.288161e-002, -6.930483e-002, -6.097648e-002, -5.164249e-002, -4.191641e-002, -4.072432e-002, -2.829520e-002, -2.497540e-003, 4.494979e-003, 4.226137e-002, 1.218945e-002, -1.898930e-002, 4.286760e-003, 3.743048e-002, 4.673630e-002, 2.045454e-002, -2.360015e-002, -5.445624e-002, -6.466313e-002, -3.713757e-002, 1.140135e-002, 5.205101e-002, 7.154512e-002, 5.800143e-002, 2.632529e-002, 2.898792e-003, -2.875107e-002, -4.178530e-002, -2.865924e-002, -2.264516e-003, 2.339036e-002, 4.442652e-002, 3.788983e-002, 1.350887e-002, -2.220058e-002, -4.614824e-002, -7.934184e-003, 2.416168e-002, 3.802534e-002, 3.503656e-002, -2.736780e-003, -1.770656e-002, -2.280967e-002, -1.953527e-002, -1.064673e-002, -1.787109e-002, -4.003445e-002, -6.442379e-002, -6.174776e-002, -1.947691e-002, 2.528325e-002, 4.121651e-002, 1.687861e-002, -2.035853e-002, -3.440731e-002, -3.383710e-002, -3.119332e-002, -1.876645e-002, -9.096827e-003, -5.101365e-003, -7.825023e-004, 2.523768e-003, 3.596357e-003, -1.243609e-002, -3.079730e-002, 6.684528e-005, 3.987102e-002, 2.509419e-002, 4.586642e-002, -3.501650e-002, -8.213175e-002, -7.769962e-002, -5.036027e-002, -1.098882e-002, 9.416519e-003, 1.107598e-002, 6.624927e-003, -1.149670e-002, -1.398838e-002, 1.091153e-002, 1.085838e-002, -1.281802e-002, -3.834091e-002, -4.298256e-002, -3.128847e-002, -1.760608e-002, 6.414159e-003, 2.929169e-002, 2.780044e-002, 5.163017e-003, -6.962947e-003, -1.067001e-002, -1.818115e-002, -2.750986e-002, 5.736519e-003, 3.918579e-002, 6.140389e-004, 2.790361e-002, -1.557868e-002, -1.547455e-002, 1.061190e-002, 2.116105e-002, 2.560179e-002, 1.524785e-002, -2.393336e-003, -1.099949e-002, -1.674059e-002, -2.279510e-002, -8.389340e-003, -6.312254e-004, -4.843986e-003, -1.744651e-002, -2.351683e-002, -3.172456e-002, -8.839611e-003, 2.538944e-002, 5.557183e-002, 5.125684e-002, 3.963140e-002, 3.327342e-002, 1.025943e-002, -4.543409e-003, 2.661977e-004, 2.019631e-002, 1.505887e-002, -5.939862e-002, 2.474506e-003, 2.145357e-002, 5.123860e-002, 4.839176e-002, 2.490047e-002, 9.391101e-003, 1.122038e-002, 3.721632e-003, -1.368625e-002, -4.028505e-002, -6.471612e-002, -6.230294e-002, -3.312888e-002, 2.024595e-003, 2.162050e-002, 1.874465e-003, -5.831859e-002, -6.848194e-002, -2.844272e-002, 2.832035e-003, -4.229463e-004, 1.269643e-002, 4.637817e-002, 4.252221e-002, 1.872842e-002, 1.217867e-002, 3.888697e-002, 2.350741e-003, -8.044869e-002, -1.591761e-002, 2.569441e-002, 4.603493e-002, 1.203958e-002, -1.639699e-002, 1.672630e-002, 2.562607e-002, 2.358119e-002, 3.257432e-002, -1.816466e-002, -5.796695e-002, -7.893769e-002, -6.285587e-002, -3.843307e-002, -6.872796e-003, -1.602935e-002, -8.437190e-002, -5.267889e-002, 3.366095e-002, 4.267478e-002, 7.457816e-003, -1.407015e-002, 3.969373e-002, 7.473223e-002, 4.188097e-002, 5.205246e-003, 1.922819e-002, -2.045535e-002, -3.869184e-002, -1.662555e-002, 3.734882e-004, 2.775983e-002, 4.462903e-003, -3.368540e-002, 1.912303e-002, 1.364214e-002, 1.738486e-005, 3.130432e-002, 1.539000e-002, -1.802910e-003, -4.310774e-002, -6.491851e-002, -6.940200e-002, -7.520858e-002, -2.155193e-002, -1.654076e-002, 3.696047e-002, 8.645461e-002, 3.524334e-002, 3.452464e-002, 1.484949e-002, 1.032995e-002, 1.283919e-002, 8.890591e-003, -7.329220e-003, 1.341720e-003, -6.245102e-002, -8.110455e-004, -1.330955e-002, -9.167839e-003, 1.460339e-002, 2.433470e-002, 1.165287e-002, 8.296490e-003, 1.009783e-002, 1.424146e-002, 1.815533e-002, 1.133815e-002, 2.370863e-002, -6.762106e-003, -2.930476e-002, -5.905035e-002, -7.901403e-002, -4.118027e-002, 1.536331e-002, 4.175940e-002, 3.843681e-002, 5.233587e-003, -1.083399e-002, -1.380662e-002, -9.387853e-003, 7.474637e-003, -1.440822e-002, -2.394358e-002, -3.160451e-003, -5.684412e-002, 1.439187e-002, -1.340643e-002, -


© ISO/IEC 2004 — All rights reserved

Copyright International Organization for Standardization
Provided by IHS under license with ISO
No reproduction or networking permitted without license from IHS
Not for Resale

1.503904e-002, -1.768287e-002, -4.630965e-002, -7.632149e-002, -8.594334e-002, -6.808337e-002, -4.454499e-002, -2.826992e-002, -4.656519e-003, 2.107364e-002, 1.398598e-003, 1.252672e-003, -3.598482e-002, -6.135566e-002, -5.828452e-002, -1.202181e-002, 1.212967e-002, -1.219380e-002, -5.058019e-002, -8.349922e-002, -8.576896e-002, -5.950742e-002, -2.761573e-002, -1.925510e-002, -1.793773e-002, 1.727230e-003, -4.065190e-002, 1.751834e-002, -7.243948e-003, -2.715065e-003, 7.610733e-003, -1.595929e-002, -4.880227e-002, -5.560331e-002, -4.097768e-002, -3.548160e-002, -3.551177e-002, -1.423781e-002, 8.598351e-003, 1.495097e-002, 2.509067e-002, -8.919574e-003, -2.797277e-002, -3.272865e-002, -2.265053e-002, -6.124123e-003, -8.826633e-003, -2.710889e-002, -5.076893e-002, -5.512750e-002, -2.723179e-002, -3.907163e-004, -2.141801e-003, -1.113094e-002, -1.095035e-002, -1.864726e-002, 1.576366e-002, -8.761322e-003, 1.852181e-002, 5.405101e-002, 4.203174e-002, 1.509972e-002, 4.531905e-003, -3.987815e-003, -2.231699e-002, -3.698189e-002, -1.352282e-002, 1.246849e-003, 3.520564e-002, 4.208075e-002, 2.256759e-002, 1.009390e-002, 5.639655e-003, -8.179794e-004, -5.534223e-003, -1.210161e-002, -1.334684e-002, -7.951025e-003, -5.244691e-004, 1.910031e-002, 3.054031e-002, 5.049397e-003, -2.301842e-002, -1.680384e-002, 8.473736e-003, 1.369387e-002, -6.832732e-003, 3.068188e-002, 7.790815e-002, 7.721663e-002, 5.850780e-002, 3.678608e-002, 7.888325e-003, -1.818001e-002, -2.752966e-002, -1.083065e-002, 1.365596e-002, 5.296680e-002, 5.663056e-002, 3.923444e-002, 3.308372e-002, 3.445840e-002, 3.452027e-002, 1.523796e-002, -1.404182e-002, -1.867130e-002, -7.176813e-003, 9.967020e-003, 3.398502e-002, 3.459888e-002, 2.132133e-003, -2.432479e-002, -7.865483e-003, 3.638918e-002, 1.199968e-002, -1.638371e-003, 2.784826e-002, 7.418714e-002, 7.735298e-002, 6.674367e-002, 4.255494e-002, 1.114724e-002, -1.369121e-002, -1.795087e-002, 4.708806e-003, 4.041071e-002, 6.654524e-002, 6.318356e-002, 4.287821e-002, 4.003874e-002, 5.450204e-002, 6.623247e-002, 4.690994e-002, 7.903605e-003, -1.772686e-002, -9.272790e-003, 1.374197e-002, 3.481732e-002, 3.421529e-002, 1.109935e-002, 3.236774e-003, 1.612936e-002, 5.540057e-002},
{5.033909e-002, 2.233575e-002, 2.274948e-002, 4.335572e-002, 5.233081e-002, 4.817686e-002, 3.962432e-002, 2.375165e-002, 7.884922e-003, -5.823004e-003, -2.485928e-002, -4.748332e-002, -6.775999e-002, -8.164214e-002, -8.183198e-002, -7.127465e-002, -5.342723e-002, -2.634897e-002, -5.145581e-003, -3.576747e-004, 5.627410e-003, 1.770233e-003, -6.679754e-003, -1.292521e-002, 6.834442e-004, 3.467714e-002, 3.113817e-002, 2.751255e-002, 4.919260e-002, 2.288294e-003, -1.770175e-002, 5.923751e-003, 1.799670e-002, 1.026044e-002, 4.609885e-003, 1.265094e-002, 2.417747e-002, 3.655558e-002, 3.245322e-002, 1.447711e-002, -7.315976e-003, -3.345879e-002, -5.120711e-002, -5.110947e-002, -4.374970e-002, -2.795193e-002, -3.817142e-003, 7.893832e-003, 6.870715e-003, 2.432985e-003, 3.416639e-003, -5.993243e-003, -1.324597e-002, -1.672477e-002, -1.959556e-003, 2.081133e-002, -4.312409e-003, 6.858577e-003, -2.637261e-002, -9.093580e-003, 3.966234e-003, -1.637380e-002, -2.502201e-002, -9.498422e-003, 2.189172e-002, 5.495169e-002, 6.344533e-002, 5.225027e-002, 2.708045e-002, -1.212947e-002, -4.919248e-002, -7.183752e-002, -7.261135e-002, -6.073585e-002, -4.266834e-002, -1.998598e-002, -9.461327e-003, -6.465437e-003, -1.290964e-002, -1.637208e-002, -9.249149e-003, -5.770715e-003, 8.453264e-004, 4.237210e-003, 2.200190e-002, 4.815351e-003, -1.699699e-002, -1.947721e-002, 4.755799e-003, -3.014044e-003, -1.992191e-002, -1.344769e-002, 1.270210e-002, 4.385479e-002, 7.092251e-002, 6.850705e-002, 5.495931e-002, 2.946030e-002, -1.576173e-002, -6.330712e-002, -9.208597e-002, -9.543918e-002, -7.707623e-002, -5.261724e-002, -2.110250e-002, -1.606848e-002, -1.344688e-002, -1.609723e-002, -1.730038e-002, -1.029129e-002, 7.289674e-003, 1.709652e-002, 3.097335e-002, 2.732137e-002, 1.570400e-002, -2.297183e-002, -6.923552e-003, 1.779371e-002, 2.186942e-002, 8.192118e-003, 1.384758e-002, 3.587343e-002, 5.433815e-002, 6.935575e-002, 7.664626e-002, 7.786924e-002, 7.617632e-002, 3.733066e-002, -1.489952e-002, -5.574686e-002, -7.095274e-002, -5.522568e-002, -2.895215e-002, 1.632192e-003, 9.243958e-003, 7.843515e-003, 5.139938e-003, 1.431716e-003, 9.273300e-003, 2.437667e-002, 3.600357e-002, 5.348138e-002, 4.913122e-002, 1.416838e-002, -1.704077e-002, -4.396329e-003, 3.350395e-002, 3.772252e-002, 2.087526e-002, 2.118090e-002, 3.578040e-002, 3.732725e-002, 5.236455e-002, 6.885634e-002, 9.064210e-002, 1.086081e-001, 8.585021e-002, 3.791790e-002, -9.941998e-003, -3.504668e-002, -3.131942e-002, -1.411343e-002, 8.506951e-003, 1.744953e-002, 1.465607e-002, 1.240346e-002, 9.286516e-003, 2.039007e-002, 3.793311e-002, 3.537940e-002, 4.584968e-002, 5.352218e-002, 2.624029e-002, -2.007190e-002, -8.015924e-003, 3.139147e-002, 2.373023e-002, 1.233866e-002, 1.885528e-002, 2.173773e-002, 9.616159e-003, 1.633751e-002, 2.729276e-002, 6.009601e-002, 9.523319e-002, 8.325525e-002, 4.701853e-002, 6.365999e-003, -2.111666e-002, -2.671750e-002, -1.800813e-002, -4.322160e-003, -1.738093e-003, -8.490920e-003, -1.907981e-002, -1.847610e-002, 8.419928e-004, 2.498267e-002, 2.562364e-002, 1.471721e-002, 2.681487e-002, 2.365057e-002, -3.420538e-002, -2.169414e-002, 1.370654e-002, -2.244129e-004, -4.094272e-004, 1.403114e-002, 1.809773e-004, -2.442827e-002, -3.125789e-002, -2.913204e-002, 8.005765e-003, 4.982013e-002, 5.207993e-002, 3.430876e-002, 1.078394e-002, -1.347907e-002, -2.038158e-002, -1.484684e-002, -7.227374e-003, -1.327446e-002, -2.850394e-002, -5.290205e-002, -5.836092e-002, -3.756508e-002, 8.236506e-003, 2.444905e-002, -8.910864e-005, -5.258603e-003, 6.470699e-003, -3.467702e-002, -2.922287e-002, -2.168480e-003, -1.317434e-002, -1.374263e-002, -6.870460e-003, -2.795222e-002, -5.389636e-002, -7.191771e-002, -

© ISO/IEC 2004 — All rights reserved


Copyright International Organization for Standardization
Provided by IHS under license with ISO
No reproduction or networking permitted without license from IHS
Not for Resale

7.697542e-002, -4.432982e-002, 2.017328e-003, 2.527316e-002, 2.597157e-002, 2.354307e-002, 1.158436e-002, 3.628598e-003, 3.144243e-003, 1.051361e-002, 3.934526e-003, -1.428076e-002, -4.755543e-002, -6.961690e-002, -5.998135e-002, -1.791179e-002, 1.832771e-002, 2.927777e-003, -2.733002e-002, -9.368400e-003, -2.936138e-002, -2.744333e-002, -6.344164e-003, -1.597091e-002, -1.895113e-002, -2.118979e-002, -4.570328e-002, -6.838450e-002, -9.311704e-002, -9.489452e-002, -6.638653e-002, -2.614669e-002, 6.326052e-003, 1.982434e-002, 2.784590e-002, 2.642245e-002, 2.384256e-002, 2.253938e-002, 3.144974e-002, 3.817957e-002, 2.921805e-002, 5.913782e-004, -3.589949e-002, -4.919913e-002, -3.266827e-002, 2.434249e-003, 8.547369e-004, -3.128619e-002, -1.736273e-002, -1.827133e-002, -1.673881e-002, -8.118099e-003, -1.975344e-002, -2.489399e-002, -3.790689e-002, -5.647130e-002, -7.228842e-002, -8.455306e-002, -8.081172e-002, -5.889817e-002, -2.703167e-002, 8.846155e-003, 2.850161e-002, 4.108819e-002, 4.448261e-002, 3.506553e-002, 2.466126e-002, 3.212108e-002, 4.765322e-002, 5.338057e-002, 4.327685e-002, 7.572974e-003, -2.594084e-002, -3.586330e-002, -2.022001e-002, -7.283566e-003, -3.171304e-002, -3.026813e-002, -3.417329e-003, -1.108467e-002, -1.230102e-002, -2.545498e-002, -2.714511e-002, -4.136924e-002, -4.295752e-002, -4.156416e-002, -4.011070e-002, -3.636522e-002, -2.638664e-002, -3.611358e-003, 2.488284e-002, 4.461377e-002, 5.376190e-002, 5.337490e-002, 4.155288e-002, 2.194157e-002, 2.028969e-002, 4.284461e-002, 6.259782e-002, 6.616775e-002, 4.181133e-002, 3.927766e-003, -2.811857e-002, -3.601284e-002, -2.320713e-002, -2.598510e-002, -3.395502e-002, 7.703378e-004, -1.435978e-002, -2.286241e-002, -3.117351e-002, -3.302038e-002, -3.950555e-002, -2.615566e-002, -9.346341e-003, 3.916121e-003, 5.318710e-003, 1.116437e-002, 2.100283e-002, 3.690935e-002, 5.458550e-002, 5.975807e-002, 5.340908e-002, 3.947871e-002, 1.685313e-002, 1.487261e-003, 1.826407e-002, 5.235358e-002, 6.837732e-002, 5.414317e-002, 1.493597e-002, -2.968493e-002, -5.471478e-002, -4.308576e-002, -2.818705e-002, -2.968860e-002, -2.551777e-003, -1.211195e-002, -1.783145e-002, -2.240173e-002, -3.289512e-002, -4.725497e-002, -4.379542e-002, -2.651657e-002, -1.048833e-002, -2.719149e-003, 7.276867e-003, 1.653138e-002, 3.135415e-002, 5.154094e-002, 6.471909e-002, 5.800788e-002, 4.278518e-002, 1.020434e-002, -2.103749e-002, -2.055594e-002, 1.513654e-002, 4.520038e-002, 5.286791e-002, 1.978186e-002, -3.230795e-002, -6.914338e-002, -5.336787e-002, -1.972924e-002, -1.605116e-002, 5.497173e-003, 5.223394e-003, 1.121890e-002, -1.748149e-003, -3.172914e-002, -5.445087e-002, -6.145227e-002, -5.894859e-002, -4.530586e-002, -3.289488e-002, -1.570973e-002, -1.248958e-003, 1.913956e-002, 4.344274e-002, 6.627474e-002, 7.127470e-002, 5.227284e-002, 1.199992e-002, -2.621292e-002, -2.820831e-002, -4.049511e-003, 1.261024e-002, 1.525602e-002, -9.949306e-003, -4.811052e-002, -7.283269e-002, -6.222645e-002, 2.742946e-003, 2.458467e-002, 3.078986e-002, 2.654336e-002, 2.810619e-002, 7.893565e-003, -1.128794e-002, -1.275045e-002, -9.049126e-004, 1.763006e-002, 3.436702e-002, 3.809492e-002, 3.123548e-002, 1.117001e-002, 1.101411e-002, 2.325534e-002, 4.428177e-002, 5.990409e-002, 5.172706e-002, 1.372705e-002, -6.240714e-003, 3.938741e-003, 2.306816e-002, 2.087757e-002, 1.843288e-002, 8.077551e-003, -5.533795e-003, -1.935368e-002, -2.361137e-002, 4.544593e-003, 5.022242e-002, 5.657033e-002, 2.378658e-002, 1.981907e-002, 1.659866e-002, 1.602812e-002, 1.214947e-002, 1.282219e-002, 1.801448e-002, 1.331996e-002, -1.940238e-003, -1.393314e-002, -2.097797e-002, -2.956262e-002, -2.994452e-002, -1.681048e-002, 6.311280e-004, 8.276935e-003, 1.569912e-003, -6.970144e-003, -2.360379e-002, -4.904363e-002, -4.865204e-002, -1.960164e-002, 8.875449e-004, 1.559567e-002, 2.487739e-002, 2.188769e-002, 6.888386e-003, 1.939707e-002, 4.618121e-002, 2.057020e-002, 2.267625e-002, 2.306879e-002, 2.357303e-002, 1.728607e-002, 2.057619e-002, 3.387917e-002, 4.047138e-002, 3.050398e-002, 1.568493e-002, -6.620858e-004, -1.444415e-002, -3.557852e-002, -5.604998e-002, -4.936845e-002, -2.993122e-002, -3.818842e-003, -2.907094e-004, -2.327898e-002, -2.658790e-002, -1.444343e-002, -6.852385e-003, -1.351228e-002, -2.123296e-002, -1.419119e-002, 1.154714e-002, 1.285646e-002, -5.095053e-004, 1.318552e-002, 8.309953e-003, 1.966910e-002, 6.133910e-003, 5.059107e-003, 2.779659e-002, 7.285074e-002, 8.481078e-002, 5.856819e-002, 3.162151e-002, 4.564849e-002, 6.097267e-002, 6.955751e-002, 2.368865e-002, -3.432599e-002, -5.107057e-002, -2.118207e-002, 2.445357e-002, 3.550780e-002, 1.256339e-002, 7.399641e-003, 1.681714e-002, 2.917655e-002, 2.346448e-002, -1.614526e-002, -6.197383e-002, -5.334267e-002, 5.177153e-003, 1.316303e-002, -1.328804e-002, -7.707970e-004, 1.877614e-003, -2.699448e-002, -2.901260e-002, -1.549037e-002, 6.732978e-002, 6.347723e-002, -1.981382e-002, -5.946583e-002, -1.406288e-002, 3.151461e-002, 9.150062e-002, 6.020343e-002, 2.320870e-002, 2.887718e-004, 2.184351e-002, 3.655594e-002, 3.216344e-002, -1.485427e-002, -5.860991e-002, -5.201425e-002, -2.882843e-002, 7.486025e-003, 1.995522e-002, -1.084332e-002, -5.711561e-002, -1.782068e-002, 2.357111e-002, 1.423278e-002, 2.049615e-002, 9.436290e-003, -1.366095e-002, -3.097018e-002, -2.976496e-002, 3.703929e-002, 5.196860e-002, -2.437302e-002, -8.283411e-002, -5.473829e-002, -1.246902e-002, 3.225564e-002, 1.832256e-002, -1.476780e-002, -2.378895e-002, 5.669746e-003, -6.088022e-003, -2.329231e-002, -3.128225e-002, -7.462148e-002, -4.533546e-002, 4.255059e-002, 9.430777e-002, 9.197021e-002, 8.778822e-002, 1.510928e-002, -5.422892e-003, 1.029577e-002, 3.225505e-002, 3.109431e-002, 1.594756e-003, 1.020227e-002, 6.067566e-002, 7.982384e-002, 4.807751e-002, 2.789026e-003, -5.085739e-002, -7.465914e-002, -5.866025e-002, -2.296772e-002, -1.079338e-003, -1.129838e-002, -2.820822e-002, -2.572435e-002, -


© ISO/IEC 2004 — All rights reserved

Copyright International Organization for Standardization
Provided by IHS under license with ISO
No reproduction or networking permitted without license from IHS
Not for Resale

1.402886e-003, -3.695468e-003, -3.251943e-002, -1.479757e-002, -4.534821e-002, -7.862330e-002, -5.111571e-002, -7.623885e-003, 1.459421e-002, 3.390785e-002, 1.290634e-002, -2.899088e-002, -3.854470e-002, 4.186608e-003, 2.314668e-002, -3.174100e-002, -2.887111e-003, 7.504812e-002, 1.194199e-001, 9.865567e-002, 3.788870e-002, -2.069772e-002, -5.239419e-002, -4.662076e-002, -1.336837e-002, -1.833606e-002, -1.576698e-002, -1.301831e-002, -6.987336e-003, -1.671901e-003, 7.376542e-003, -2.041150e-002, -2.305042e-003, -8.617092e-003, -3.603965e-002, -3.416082e-002, -3.594653e-003, 2.913381e-002, 4.613961e-002, 2.782886e-002, -2.325547e-002, -4.870431e-002, -1.382537e-002, 1.531330e-002, -4.997280e-002, -4.132479e-002, 2.012116e-002, 5.999696e-002, 3.828409e-002, -1.089287e-002, -5.489471e-002, -7.258133e-002, -4.885295e-002, -1.803593e-002, -1.634697e-002, -6.536181e-003, 1.480385e-002, 1.662104e-002, 4.205551e-003, 4.278940e-003, -4.115809e-003, -2.425922e-002, -1.321210e-002, -3.077414e-002, -3.664880e-002, -1.424780e-002, 1.912106e-002, 4.160302e-002, 3.451649e-002, -7.941441e-003, -3.664280e-002, -6.487725e-003, 2.211183e-002, -3.787734e-002, -5.465806e-002, -3.116704e-002, -1.266442e-002, -3.130289e-002, -6.361170e-002, -8.097029e-002, -7.767031e-002, -3.952093e-002, -1.144141e-002, -5.046186e-003, -6.625071e-005, 2.641047e-002, 3.111196e-002, 8.544102e-003, -1.495943e-002, 6.501936e-003, -2.957612e-003, -1.783205e-002, -3.596091e-002, -5.121446e-002, -4.253005e-002, -1.494439e-002, 1.242529e-002, 1.829054e-002, -5.948701e-003, -2.094354e-002, 1.345380e-002, 3.374389e-002, -1.410610e-002, -2.940142e-002, -2.527063e-002, -3.431554e-002, -5.593725e-002, -6.964549e-002, -6.059755e-002, -2.216758e-002, 1.618790e-002, 5.339078e-003, -2.572554e-003, 1.948847e-002, 4.550303e-002, 4.905623e-002, 1.810936e-002, -1.909129e-002, -1.536514e-002, 6.072560e-003, 1.996857e-002, -2.550825e-003, -3.128839e-002, -3.811082e-002, -1.499706e-002, 1.147252e-002, 2.436874e-002, 1.675439e-002, 1.926691e-003, 2.094263e-002, 3.178958e-002, 1.058019e-002, -3.011899e-003, 4.033136e-003, 1.111209e-002, 1.478407e-003, 6.734584e-003, 2.968477e-002, 4.664906e-002, 2.595664e-002, 6.283428e-003, 2.174980e-002, 5.840119e-002, 7.614429e-002, 6.776953e-002, 4.558113e-002, 6.044123e-003, -2.555873e-002, -2.707264e-002, 1.736322e-002, 3.689099e-002, 2.822014e-002, 2.272859e-002, 2.710962e-002, 4.002709e-002, 4.246728e-002, 2.750256e-002, 1.147890e-002, 2.754928e-002},
{4.275887e-004, 2.628638e-002, 5.244375e-002, 4.018410e-002, 2.443910e-002, 1.734437e-002, 1.193273e-002, 6.530561e-003, 1.211588e-002, 3.110031e-002, 3.437033e-002, 2.206906e-002, 9.455223e-003, -2.399521e-003, -8.594312e-003, -1.200847e-002, -7.627994e-003, -1.814077e-003, -7.875284e-004, -2.085021e-002, -3.053755e-002, -5.540911e-003, -7.974740e-004, -7.216683e-003, -2.083798e-002, 1.387655e-002, 8.448536e-002, 4.440798e-002, -8.997339e-002, -4.174406e-002, -1.644893e-002, -1.903223e-002, -3.013785e-002, -2.418364e-002, -2.262788e-002, -3.072514e-002, -2.579316e-002, -1.022349e-002, 6.008328e-003, 6.529652e-003, -3.376952e-003, -2.766014e-002, -4.277500e-002, -4.371557e-002, -3.098823e-002, -9.210085e-003, 1.562323e-003, 4.851413e-003, -2.378499e-003, -2.232218e-002, -2.452861e-002, -1.280030e-002, -2.779445e-003, -1.132733e-002, -2.426648e-002, 7.036426e-003, 3.791065e-002, -2.859556e-002, -2.827242e-002, -8.240185e-003, -1.810969e-003, -6.101326e-003, 4.767033e-003, 2.346733e-003, -1.490176e-003, -1.815528e-003, 1.554853e-002, 2.704468e-002, 3.183383e-002, 1.915910e-002, -1.323354e-002, -2.822480e-002, -2.207156e-002, -5.453923e-003, 2.529689e-002, 2.873519e-002, 2.567086e-002, 2.123997e-002, 9.550601e-003, 7.509802e-003, 6.696604e-003, -1.342525e-003, 1.507852e-002, 2.109358e-002, 3.118129e-003, -8.924243e-003, -1.399276e-002, -1.403047e-002, 9.592603e-003, 1.131797e-002, 2.828234e-003, 3.143054e-003, -3.489506e-003, -2.227229e-003, -5.279038e-004, 1.172681e-002, 1.748456e-002, 2.496435e-002, 1.756662e-002, 3.111798e-003, -5.194396e-003, 5.148612e-004, 8.897934e-003, 1.862256e-002, 1.077626e-002, -1.973417e-003, -1.745452e-002, -2.025280e-002, -4.802515e-003, 1.998317e-002, 2.194479e-002, 4.081896e-003, 2.948136e-002, 4.635763e-002, -4.031088e-003, -4.020393e-002, 3.815994e-003, 2.044221e-002, 6.224342e-003, -1.119020e-002, -2.439222e-002, -2.528003e-002, -2.120928e-002, -2.726891e-002, -3.221410e-002, -2.274041e-002, -1.983935e-003, 1.125058e-002, 1.630630e-002, 1.232666e-002, 9.429689e-003, 1.121459e-002, 8.513179e-003, 3.357767e-003, -1.700360e-002, -4.446982e-002, -5.959029e-002, -4.954096e-002, -6.084908e-003, 3.405174e-002, 1.332339e-002, 8.500092e-003, 3.760551e-002, 3.045842e-002, -3.623988e-002, 7.761891e-003, 1.237670e-002, -9.799669e-004, -1.603921e-002, -3.286572e-002, -3.212810e-002, -3.989113e-002, -6.374635e-002, -8.015940e-002, -5.821223e-002, -1.572018e-002, 1.676597e-002, 2.783536e-002, 2.051990e-002, 5.410891e-003, 1.469919e-003, 7.291671e-003, 1.433392e-002, 5.741225e-003, -1.960373e-002, -4.183817e-002, -5.391508e-002, -3.913877e-002, 2.604685e-002, 4.114028e-002, 8.778819e-003, -3.285597e-003, 2.033233e-002, -1.940554e-002, 4.716908e-003, 1.443906e-002, 1.334802e-002, 8.777081e-003, -4.070832e-003, -2.820341e-003, -1.685693e-002, -5.383917e-002, -8.308298e-002, -6.102214e-002, -3.619349e-003, 3.175414e-002, 3.821633e-002, 2.350599e-002, -5.746033e-004, -1.205796e-002, -4.002695e-003, 2.066670e-002, 2.863247e-002, 2.570997e-002, 1.223483e-002, -6.933469e-003, -1.822609e-002, 1.649046e-002, 4.362709e-002, 2.321210e-002, -1.180330e-002, -7.122963e-003, -2.893172e-002, -6.736261e-004, 1.485620e-002, 2.924377e-002, 4.593711e-002, 4.879972e-002, 4.830109e-002, 3.339683e-002, -1.212935e-002, -4.866475e-002, -3.239924e-002, 2.129768e-002, 4.939271e-002, 4.552148e-002, 2.608814e-002, 1.146126e-004, -1.823579e-002, -1.509148e-002, 1.273782e-002, 3.028612e-002, 4.245072e-002, 3.765963e-002,

© ISO/IEC 2004 — All rights reserved


--`,,```,,,,````-`-`,,`,,`,`,,`---
Copyright International Organization for Standardization
Provided by IHS under license with ISO
No reproduction or networking permitted without license from IHS
Not for Resale

2.170295e-002, 1.131798e-002, 1.610454e-002, 2.893546e-002, 2.644353e-002, 1.091949e-003, -7.986905e-003, -2.568135e-002, -1.663414e-002, 1.438802e-002, 5.089905e-002, 5.994681e-002, 7.665280e-002, 8.867060e-002, 7.916798e-002, 4.119292e-002, -7.283969e-003, -6.467349e-004, 3.245780e-002, 5.877564e-002, 4.803222e-002, 2.911657e-002, 4.641487e-003, -2.049311e-002, -2.863254e-002, -6.999878e-003, 7.931614e-003, 2.246102e-002, 2.070548e-002, 3.171861e-003, 2.457012e-003, 1.557489e-003, 3.826222e-003, 4.870594e-003, -2.882344e-003, -1.135535e-003, -1.154794e-002, -3.153822e-002, 1.318972e-002, 3.860529e-002, 3.474577e-002, 5.306503e-002, 8.161764e-002, 8.660136e-002, 5.416183e-002, 4.166917e-003, -1.223186e-004, 1.724303e-002, 4.871333e-002, 4.764952e-002, 3.842375e-002, 1.466537e-002, -1.159033e-002, -2.452609e-002, -1.247967e-002, -1.615478e-002, -1.294330e-002, -1.156559e-002, -2.726080e-002, -2.628108e-002, -9.719398e-003, -1.403224e-002, -1.916399e-002, -2.058669e-002, -8.622625e-003, -5.217665e-003, -3.602278e-002, -1.107598e-003, -2.002511e-002, -2.505695e-002, 8.886093e-003, 4.507699e-002, 5.323740e-002, 3.249859e-002, -7.963203e-003, -2.466744e-002, -2.069689e-002, 1.338471e-002, 2.808155e-002, 3.585335e-002, 2.704146e-002, 6.307957e-003, -1.265105e-002, -1.349639e-002, -2.338299e-002, -3.476189e-002, -3.256552e-002, -4.290854e-002, -3.942314e-002, -1.436639e-002, -6.237398e-003, -1.960125e-002, -3.240427e-002, -1.858236e-002, -9.551054e-003, -3.578109e-002, -2.650717e-002, -6.148152e-002, -6.441948e-002, -2.438304e-002, 1.072662e-002, 2.543718e-002, 2.280179e-002, -4.193313e-003, -3.127903e-002, -3.691274e-002, -1.065200e-002, 2.763544e-002, 4.310090e-002, 4.547050e-002, 3.080806e-002, 8.551823e-004, -1.521893e-002, -1.812547e-002, -2.242699e-002, -2.132515e-002, -3.527515e-002, -3.269721e-002, -1.071529e-002, 9.999546e-003, -5.836435e-003, -2.693957e-002, -1.075648e-002, -8.311232e-003, -3.141496e-002, -3.329925e-002, -6.775771e-002, -7.031487e-002, -2.682843e-002, 1.588037e-002, 2.973172e-002, 2.986326e-002, 1.108350e-002, -2.683594e-002, -4.426137e-002, -2.626964e-002, 1.756901e-002, 4.448865e-002, 5.032207e-002, 4.910034e-002, 1.596563e-002, -1.387551e-002, -1.263362e-002, 6.622516e-003, 9.180192e-003, -1.428597e-002, -2.214173e-002, -1.093134e-002, 1.105711e-002, 7.399123e-003, -9.798669e-003, 8.204891e-003, 5.033611e-003, -2.184609e-002, -1.397681e-002, -4.633718e-002, -6.015847e-002, -3.183267e-002, 1.034520e-002, 3.416030e-002, 3.602646e-002, 2.116970e-002, -2.670326e-002, -6.390320e-002, -6.546453e-002, -2.078668e-002, 2.076613e-002, 3.645230e-002, 3.252023e-002, 5.147367e-003, -2.703075e-002, -2.629146e-002, 1.975346e-003, 9.933574e-003, -1.313668e-002, -3.889138e-002, -5.301713e-002, -3.970507e-002, -2.888025e-002, -1.929434e-002, 1.983260e-002, 1.940664e-002, -8.682867e-003, 1.476683e-002, -2.589458e-002, -5.950546e-002, -4.144252e-002, -5.433863e-003, 2.568363e-002, 2.841285e-002, 1.636807e-002, -2.453008e-002, -8.046694e-002, -1.049393e-001, -8.269170e-002, -3.637181e-002, -6.467876e-003, -1.346090e-002, -3.116719e-002, -3.695551e-002, -1.889175e-002, 1.048444e-002, 2.443472e-002, 2.302428e-002, -1.428669e-003, -3.032249e-002, -5.045932e-002, -5.960240e-002, -5.938750e-002, 7.239564e-003, 2.436252e-002, -4.530088e-003, 3.502469e-002, 6.091717e-003, -1.067104e-002, -1.013149e-002, -2.008858e-002, -1.573370e-002, 8.733136e-003, 3.892356e-002, 4.454714e-002, -1.916133e-003, -6.621671e-002, -8.410158e-002, -6.396498e-002, -4.119132e-002, -3.510499e-002, -4.329794e-002, -1.111116e-002, 2.180147e-002, 2.818005e-002, 2.401300e-002, 3.094463e-002, 4.086751e-002, 5.462208e-002, 5.872000e-002, 3.189780e-002, -2.238932e-002, 8.630425e-003, 8.478436e-003, -3.269725e-003, 3.952127e-002, 2.974643e-002, 1.077397e-002, -7.319364e-003, -1.801535e-002, -6.543400e-003, 7.331026e-003, 2.369849e-002, 2.857738e-002, -1.029041e-003, -4.866700e-002, -5.588107e-002, -5.423532e-002, -5.093937e-002, -4.636988e-002, -4.278145e-002, -1.027908e-002, 2.134768e-002, 2.415504e-002, 1.167462e-002, -3.837507e-004, -1.301984e-002, -2.908008e-003, 2.771503e-002, 4.513120e-002, 2.302634e-002, 4.396820e-002, 1.561211e-002, -2.145657e-002, 1.251782e-003, -1.168234e-002, -4.084969e-002, -4.596796e-002, -2.933693e-002, 3.698984e-003, 2.989054e-002, 3.517589e-002, -6.915988e-003, -7.883255e-002, -1.194720e-001, -9.193204e-002, -7.025250e-002, -7.126523e-002, -6.938120e-002, -6.474700e-002, -3.359067e-002, 2.065678e-002, 6.661952e-002, 7.413110e-002, 6.396562e-002, 3.862044e-002, 2.856137e-002, 2.790259e-002, 2.928918e-003, -2.057976e-002, 2.338965e-002, 7.480218e-003, -1.438279e-002, -8.716848e-003, -1.596560e-002, -3.208633e-002, -4.454291e-002, -1.197441e-002, 2.442821e-002, 1.160126e-002, 1.356051e-002, 5.256007e-002, -2.828116e-002, -1.029891e-001, -3.273206e-002, 1.898804e-002, -1.615994e-002, -3.791530e-002, -1.466481e-002, 2.076353e-002, 6.349904e-002, 5.699201e-002, 2.042599e-002, 2.803827e-002, 2.872432e-002, 3.062107e-002, 5.746351e-002, 3.909519e-002, -1.818552e-002, -5.835044e-003, -1.193069e-002, 6.496490e-003, 3.878491e-004, 2.528683e-002, 2.291516e-002, -9.886889e-002, -4.758277e-002, -1.152928e-002, -6.247685e-002, -1.261135e-001, 2.062451e-002, 4.164542e-002, -2.046839e-002, 6.035692e-002, 1.239341e-001, 6.694193e-002, 1.454191e-002, 3.982340e-002, 3.151918e-002, 1.458217e-003, -7.904958e-002, -9.578647e-002, -1.326108e-002, 6.498218e-002, -2.813149e-002, -1.627308e-002, 6.610533e-002, 1.594049e-002, -2.029844e-002, -3.974811e-002, -4.101235e-003, -1.585130e-002, 3.314652e-002, 2.595479e-002, -4.200514e-002, 1.706758e-002, 3.032387e-002, -4.817938e-002, -1.793169e-002, 9.966383e-002, 1.297419e-001, 7.102625e-002, 7.619529e-002, 9.797009e-002, 5.152858e-002, 1.869076e-002, 5.898167e-002, 7.569409e-002, 4.355210e-002, 2.790393e-002, -3.810771e-002, -6.426900e-003, 7.301402e-002, -2.744103e-002, -4.767085e-002, 2.551308e-002, 2.822530e-002, -7.225569e-003, -


© ISO/IEC 2004 — All rights reserved

Copyright International Organization for Standardization
Provided by IHS under license with ISO
No reproduction or networking permitted without license from IHS
Not for Resale

4.943619e-002, -2.252368e-003, -3.847820e-002, -4.685819e-002, -4.548893e-002, -3.212485e-002, -1.711298e-002, -3.687990e-002, -3.919589e-002, 2.524140e-002, 7.198250e-002, 9.068337e-002, 6.695614e-002, 5.920561e-003, 4.551750e-002, 3.829741e-002, 1.104489e-002, 3.502547e-002, 9.492600e-002, 1.362991e-002, 9.158268e-003, 3.444770e-002, 1.786696e-002, 6.395686e-002, 8.044516e-002, -3.694634e-004, -5.254340e-002, -1.134648e-002, 8.650411e-003, -1.735358e-002, 1.860697e-002, -1.700338e-002, -1.796472e-002, -3.593828e-003, 7.118232e-004, -3.338672e-002, -7.656351e-002, -8.574804e-002, -6.177470e-002, -3.336573e-003, 4.428023e-002, 1.250891e-002, -3.325759e-002, 4.311274e-002, 2.697644e-002, 1.580317e-002, 2.238176e-003, 8.622657e-002, 1.380878e-002, -6.384450e-002, -6.436120e-002, -3.410437e-002, 1.266028e-002, 3.064904e-002, -1.733857e-002, -5.891893e-002, -2.917493e-002, 9.308914e-003, 1.685526e-003, 2.550762e-002, -1.053841e-003, 1.559965e-002, 4.984678e-002, 4.089972e-002, -1.329189e-002, -6.488449e-002, -7.944552e-002, -5.576289e-002, -3.198344e-003, 4.150705e-002, -2.704780e-002, -1.246912e-003, 4.931765e-002, 8.347596e-003, 2.732815e-002, 1.014335e-002, 5.244448e-002, 6.297890e-002, -4.355503e-002, -8.642270e-002, -7.649069e-002, -4.709821e-002, -1.963975e-002, -2.143338e-002, -4.330079e-002, -2.025486e-002, 2.533153e-002, 8.309608e-003, 2.415415e-002, 5.641283e-003, 2.694020e-002, 6.508927e-002, 6.565050e-002, 2.954087e-002, -1.621608e-002, -3.342065e-002, -1.112307e-002, 4.382461e-002, 2.543289e-002, -2.633263e-002, 3.741302e-002, 4.106629e-002, -9.261572e-003, 2.647244e-002, 5.860994e-002, 1.708115e-002, 6.159226e-002, 2.019546e-002, -3.096594e-002, -4.254318e-002, -2.180517e-002, -3.615342e-003, -5.070392e-003, -9.429700e-003, 1.481488e-002, 2.940703e-002, -8.306029e-003, 1.388895e-002, 9.777186e-003, 2.038876e-002, 6.154801e-002, 5.662234e-002, 3.156284e-002, 6.120342e-003, 2.995699e-003, 2.581009e-002, 3.509000e-002, -1.727714e-004, 1.151889e-002, 4.207735e-002, 1.429078e-002, -4.582650e-002, -2.124508e-002, 8.395409e-002, 3.847411e-002, -1.690374e-002, -1.266352e-003, 1.859330e-003, 2.341895e-004, 1.505998e-002, 2.827343e-002, 3.175353e-002, 2.403000e-002, 3.137062e-002, 2.510222e-002, -3.521239e-002, 1.553080e-004, -5.320581e-003, 7.418715e-004, 1.867533e-002, 4.727291e-003, -9.538424e-003, -1.797889e-002, -8.208559e-003, 5.783270e-003, -3.511026e-003, -6.539317e-003, 8.373978e-003, 6.570016e-004, -3.796131e-002, -1.038691e-001, -8.841165e-002, 3.349126e-002, 6.482322e-002, -1.649781e-002, -6.871238e-002, -5.921799e-002, -4.299378e-002, -2.717230e-002, -5.672649e-003, 8.954136e-003, 9.376212e-003, 8.566973e-003, -5.780089e-004, -4.456255e-002},
{-5.785910e-002, -1.147326e-002, -1.135826e-003, -1.372690e-002, -1.486737e-002, 2.539832e-003, 1.892064e-002, 1.150384e-002, -7.923398e-004, -1.054148e-002, -2.107270e-002, -3.926523e-002, -5.311575e-002, -5.958951e-002, -5.889691e-002, -4.846269e-002, -3.078729e-002, -9.700654e-003, 1.357959e-002, 2.562809e-002, 2.011522e-002, 1.303718e-002, 2.057448e-002, 3.431158e-002, 3.039787e-002, 2.042845e-003, -2.862597e-003, -1.011705e-002, -3.222556e-002, 5.981836e-003, 9.841473e-003, -7.909511e-003, -1.350638e-002, 5.568084e-003, 3.065333e-002, 2.250547e-002, -1.407317e-003, -1.299575e-002, -1.295891e-002, -1.151412e-002, -2.294458e-002, -3.898749e-002, -5.299863e-002, -5.653024e-002, -4.802680e-002, -3.246341e-002, -8.475912e-003, 1.618474e-002, 2.859590e-002, 3.214811e-002, 1.902479e-002, 7.732439e-003, 1.796895e-002, 4.462094e-002, 4.250423e-002, 1.716610e-002, 2.757917e-002, 1.547089e-002, 1.696919e-002, -8.339861e-003, -1.936392e-002, -1.484067e-002, 5.003730e-003, 1.232858e-002, -5.061589e-003, -1.746428e-002, -1.598154e-002, -7.302694e-003, 1.732918e-003, -7.139490e-004, -2.329898e-002, -4.589100e-002, -5.754861e-002, -4.993826e-002, -2.505486e-002, -2.315791e-003, 1.382325e-002, 2.049221e-002, 2.672316e-002, 2.876792e-002, 1.228191e-002, 2.184155e-003, 1.878644e-002, 3.416863e-002, 9.295071e-003, -1.664681e-003, 1.705867e-002, 1.668012e-003, -1.334794e-002, -1.090315e-002, -4.669443e-003, -2.675986e-003, -4.893390e-003, -1.187104e-002, -1.029538e-002, -9.541559e-004, 6.484635e-003, 7.317965e-003, 3.445588e-003, -1.601125e-002, -4.212623e-002, -5.078995e-002, -3.384423e-002, -1.234684e-002, 1.847838e-002, 3.416589e-002, 4.212917e-002, 4.838915e-002, 4.859531e-002, 3.292858e-002, 1.280066e-002, 1.959386e-003, 1.110632e-002, 4.580249e-003, -2.014337e-002, -4.342115e-003, -1.183840e-003, -1.170030e-004, -4.112256e-003, -8.229528e-003, -7.016484e-003, -5.029762e-003, -4.057077e-003, -9.086908e-003, -1.543780e-002, -1.059900e-002, 1.264208e-003, 7.285156e-003, -3.925548e-003, -2.195541e-002, -2.465858e-002, -1.113650e-002, 1.004251e-002, 3.253237e-002, 4.705484e-002, 5.784148e-002, 6.997673e-002, 7.148762e-002, 5.263523e-002, 3.283455e-002, 1.668534e-002, 7.270769e-003, 3.423260e-003, -2.478167e-002, -3.164795e-002, -3.075456e-005, -5.798358e-004, -8.082502e-003, -8.763234e-003, 1.522000e-003, -4.713344e-003, -2.381873e-002, -4.428899e-002, -5.496952e-002, -3.659914e-002, -8.866124e-003, 5.397790e-003, 7.265594e-003, 1.716346e-003, 2.800518e-003, 1.734384e-002, 3.376987e-002, 5.092030e-002, 5.517410e-002, 5.483440e-002, 5.855535e-002, 6.703142e-002, 5.665114e-002, 3.636088e-002, 1.843868e-002, 4.775446e-003, -5.073762e-003, -2.750332e-002, -4.701208e-002, -1.190514e-003, -4.867260e-003, -3.242099e-003, -6.124631e-003, -7.126498e-003, -2.687152e-002, -4.784053e-002, -6.543652e-002, -6.003379e-002, -2.871092e-002, 9.067702e-003, 2.423501e-002, 2.874198e-002, 1.805619e-002, 1.743634e-002, 3.174121e-002, 4.376463e-002, 5.499756e-002, 4.231488e-002, 3.427890e-002, 2.237890e-002, 2.870636e-002, 3.368496e-002, 2.241894e-002, 4.482656e-003, -1.284955e-002, -1.826928e-002, -2.714664e-002, -4.609014e-002, -1.108359e-002, 2.823843e-003, 1.161083e-002, 1.355727e-003, -1.020204e-002, -

© ISO/IEC 2004 — All rights reserved


Copyright International Organization for Standardization
Provided by IHS under license with ISO
No reproduction or networking permitted without license from IHS
Not for Resale

2.704801e-002, -3.812668e-002, -4.066011e-002, -2.443976e-002, 1.308750e-002, 4.540182e-002, 4.950560e-002, 3.827109e-002, 1.822040e-002, 7.970234e-003, 1.659378e-002, 2.402862e-002, 3.122568e-002, 1.631760e-002, -1.570462e-004, -1.346797e-002, -1.762890e-002, -5.278435e-003, -4.274204e-003, -1.196149e-002, -3.432595e-002, -3.545900e-002, -2.078044e-002, -3.938257e-002, -1.216545e-002, 2.143667e-002, 3.001952e-002, 8.066935e-004, -9.469270e-003, -9.811758e-003, -5.323116e-003, 7.836781e-004, 1.736098e-002, 4.901170e-002, 6.855521e-002, 6.168609e-002, 3.527113e-002, 7.601772e-003, -1.135336e-002, -1.243331e-002, 1.735719e-003, 7.649957e-004, -9.022270e-003, -2.449263e-002, -3.457271e-002, -4.501806e-002, -4.557183e-002, -4.189361e-002, -3.828395e-002, -4.001890e-002, -4.337617e-002, -1.114560e-002, -2.161806e-002, 4.755757e-004, 4.027497e-002, 1.967492e-002, -1.215419e-002, -1.120988e-002, 8.055334e-003, 1.827940e-002, 2.688128e-002, 3.769450e-002, 5.533281e-002, 6.040052e-002, 5.327903e-002, 2.468499e-002, -6.797365e-003, -2.638985e-002, -3.012532e-002, -1.676495e-002, -2.258728e-002, -2.588170e-002, -3.394613e-002, -4.093889e-002, -4.502545e-002, -5.002683e-002, -5.203730e-002, -5.250952e-002, -4.321182e-002, -3.234225e-002, 1.099015e-003, 5.957010e-003, 7.985374e-003, 3.112992e-002, -4.573193e-003, -1.549336e-002, -9.844773e-005, 2.202904e-002, 3.034608e-002, 3.010572e-002, 2.393869e-002, 2.609242e-002, 2.735319e-002, 2.383538e-002, 3.093176e-003, -1.936671e-002, -3.589225e-002, -3.089310e-002, -2.674981e-002, -2.682719e-002, -2.142902e-002, -2.943459e-002, -3.291618e-002, -2.690290e-002, -1.949224e-002, -3.149203e-002, -4.767016e-002, -4.452049e-002, -1.917648e-002, 1.721819e-002, 2.367555e-002, -1.515644e-003, 8.171879e-003, -2.243098e-002, -1.831332e-002, 7.908932e-003, 2.556158e-002, 2.492389e-002, 6.045266e-003, -1.944610e-002, -2.569884e-002, -2.220171e-002, -6.669649e-003, -6.750777e-003, -1.318767e-002, -2.029610e-002, -1.344211e-002, -1.658704e-002, -2.312250e-002, -2.600254e-002, -3.542079e-002, -2.913600e-002, -1.436973e-002, 6.975285e-003, 9.592141e-003, -1.967416e-002, -4.014305e-002, -1.634570e-002, 2.544513e-002, 3.326520e-002, -1.885094e-002, -1.271645e-002, -2.963331e-002, -6.946801e-003, 3.584725e-002, 4.705913e-002, 2.692414e-002, -1.305022e-002, -5.022464e-002, -6.741828e-002, -5.628510e-002, -2.573704e-002, -4.911089e-003, 4.389687e-003, 4.657060e-003, 2.973057e-003, -8.006514e-003, -2.531898e-002, -3.382534e-002, -4.773137e-002, -3.563989e-002, -1.118568e-002, 2.555512e-002, 4.425806e-002, 2.582780e-002, -1.564491e-002, -1.125729e-002, 2.546598e-002, 3.280698e-002, -3.522394e-002, -2.074091e-002, -5.602835e-003, 4.332764e-002, 9.034706e-002, 8.916468e-002, 4.943291e-002, 9.458891e-004, -4.640008e-002, -6.996222e-002, -6.135949e-002, -2.646287e-002, 5.851495e-003, 2.643632e-002, 3.063593e-002, 2.278437e-002, 2.268016e-003, -3.100706e-002, -5.873769e-002, -7.462896e-002, -6.251183e-002, -2.393288e-002, 2.797856e-002, 6.697550e-002, 7.462006e-002, 2.806402e-002, 1.101797e-003, 2.001467e-002, 1.707231e-002, -2.557404e-002, 4.690928e-003, 2.391152e-002, 6.263114e-002, 8.269511e-002, 6.307404e-002, 2.384494e-002, -1.633292e-002, -4.185733e-002, -5.749997e-002, -4.149938e-002, -1.444195e-002, 1.563916e-002, 3.627940e-002, 4.289204e-002, 3.525211e-002, 5.171382e-003, -3.647105e-002, -6.434917e-002, -6.977694e-002, -6.405112e-002, -4.436127e-002, -4.270680e-003, 4.262332e-002, 7.051048e-002, 4.885767e-002, 1.504891e-002, 1.252299e-002, -1.104631e-002, -4.210578e-003, 1.234969e-002, 7.738614e-003, 3.948346e-002, 5.589712e-002, 4.483517e-002, 9.324583e-003, -3.974874e-002, -6.697247e-002, -7.231812e-002, -4.593896e-002, -6.030713e-004, 3.155247e-002, 3.443804e-002, 2.173008e-002, 1.459985e-002, 1.283249e-002, 4.143951e-003, 5.735695e-003, 6.930837e-003, -1.147249e-002, -1.442161e-002, -5.308532e-003, 2.032984e-002, 3.349676e-002, 2.308737e-002, 1.469158e-002, 6.155368e-003, -2.544096e-002, 1.060035e-002, 6.575853e-003, -2.305796e-002, 1.798475e-002, 3.543866e-002, 2.776374e-002, 1.732771e-002, -1.137602e-002, -4.810867e-002, -6.697729e-002, -5.174303e-002, 2.973234e-003, 4.934878e-002, 4.719224e-002, 2.009736e-002, 1.469077e-002, 2.410918e-002, 2.698933e-002, 1.458183e-002, -4.411646e-003, -1.485915e-002, -7.190664e-003, 3.013055e-002, 4.737276e-002, 4.469328e-002, 2.576813e-002, 1.101346e-002, 8.462977e-003, -3.054407e-002, 2.638500e-002, -3.325665e-003, -2.513735e-002, -1.186344e-002, -2.841783e-002, -8.887944e-003, 1.145369e-002, -1.232055e-002, -4.760438e-002, -4.755383e-002, -2.986275e-002, 1.672101e-002, 6.994747e-002, 7.262040e-002, 4.270050e-002, 2.848300e-002, 2.656942e-002, 6.137404e-003, -2.085035e-002, -3.623957e-002, -8.015610e-003, 2.502408e-002, 4.367541e-002, 5.024415e-002, 4.106683e-002, 2.796309e-002, 1.764707e-002, 1.887742e-002, -1.486516e-002, 2.065314e-002, 8.220484e-003, -3.550777e-002, -5.805682e-002, -4.564197e-002, 2.227872e-002, 8.429194e-002, 5.546267e-002, -3.497646e-002, -8.001169e-002, -4.513380e-002, 9.645441e-004, 2.800770e-002, 5.125808e-002, 4.151030e-002, 3.880277e-002, 1.355381e-002, -2.502254e-002, -7.798541e-002, -5.095890e-002, 2.449821e-002, 5.308629e-002, 3.838999e-002, 2.721938e-002, -7.733086e-003, -2.596865e-002, -3.126434e-003, 2.157988e-002, 5.700989e-003, 1.445294e-002, 9.381246e-003, -1.601782e-002, 8.545919e-003, 3.200263e-002, -1.641621e-003, 8.500162e-002, 1.121045e-001, 6.079701e-002, -3.571224e-004, 2.365953e-003, -2.783673e-002, -8.514072e-002, -5.038786e-002, -3.256262e-002, -3.114684e-002, -4.277600e-002, -3.887357e-002, -5.239160e-002, 1.291708e-002, 9.189069e-002, 6.890591e-002, 2.165433e-003, 1.592107e-002, 1.122648e-002, -1.527286e-002, 5.271458e-003, 1.256696e-002, 1.466898e-002, -3.128778e-002, -1.622742e-002, 3.169040e-002, 8.372479e-002, 5.489840e-002, -4.642701e-002, 2.780560e-002, 1.055044e-001, 1.304715e-001, 1.140728e-001, 8.433907e-002, -7.082972e-003, -


© ISO/IEC 2004 — All rights reserved

Copyright International Organization for Standardization
Provided by IHS under license with ISO
No reproduction or networking permitted without license from IHS
Not for Resale

1.250553e-001, -6.314334e-002, -3.634956e-002, -6.112587e-002, -6.525056e-002, -7.663699e-003, 1.024964e-002, 8.634942e-002, 8.435437e-002, 8.907085e-003, -3.506086e-002, 5.029151e-003, 2.068675e-002, 3.237913e-002, 3.873275e-002, -4.229019e-003, -1.947773e-002, -2.917087e-002, -1.001464e-002, 4.790148e-002, 4.842824e-002, -1.453092e-002, -6.462423e-002, -5.409287e-002, -1.454200e-002, 2.196747e-002, 5.776701e-002, 6.909589e-002, -1.752796e-002, -7.059204e-002, -2.729041e-002, -2.663353e-002, -4.437287e-002, -4.696774e-002, -2.011796e-003, -1.178912e-002, -1.033925e-002, -5.217171e-003, -2.865335e-002, -2.609413e-002, -6.607126e-003, -5.268205e-004, 1.663785e-002, 2.691260e-002, -3.374513e-002, -2.788262e-002, -6.421007e-003, -1.890555e-002, 3.801090e-002, 4.804333e-002, -1.669576e-002, -8.878004e-002, -1.102747e-001, -9.707256e-002, -7.682563e-002, -4.162834e-002, -4.267784e-003, -3.375261e-002, -2.553085e-002, -1.613999e-002, -3.020739e-002, -3.950314e-002, -3.112779e-002, -9.596566e-003, -3.693503e-002, -7.192905e-002, -8.020195e-002, -8.310651e-002, -6.153032e-002, -2.247672e-002, 6.729862e-003, 2.607229e-002, 2.430701e-002, -3.241517e-002, -8.972035e-003, 8.235420e-003, -4.414003e-002, 1.584211e-002, 6.262107e-002, 2.021217e-002, -4.950641e-002, -8.120485e-002, -8.788905e-002, -8.413172e-002, -5.894309e-002, -2.712788e-002, -3.653793e-003, -1.172322e-002, 1.337931e-003, -9.008282e-003, -3.119005e-002, -2.021922e-002, 1.726686e-003, -3.732262e-002, -6.166333e-002, -6.210304e-002, -4.804661e-002, -2.069755e-002, 1.442223e-002, 3.877369e-002, 3.889332e-002, 1.494177e-002, -3.005629e-002, 7.480512e-003, 2.945513e-002, -5.045641e-002, -1.107906e-002, 5.805118e-002, 3.829067e-002, -1.883084e-002, -5.251608e-002, -6.475865e-002, -6.486667e-002, -3.913829e-002, 9.188032e-003, 1.269010e-002, -1.180934e-002, 3.038672e-002, 2.871757e-002, -1.146078e-002, -1.202013e-002, 5.422932e-003, -2.022737e-003, -4.337806e-002, -4.900355e-002, -2.655253e-002, 5.444284e-003, 3.648929e-002, 5.072697e-002, 2.933337e-002, -1.216755e-003, -1.557769e-002, 3.001188e-002, 4.805811e-002, -2.929417e-002, -5.787274e-003, 5.738379e-002, 4.288345e-002, 8.342892e-003, -1.592022e-002, -2.758670e-002, -1.415993e-002, 2.879432e-002, 4.587138e-002, 5.252484e-003, 6.761014e-003, 5.455147e-002, 5.257613e-002, 2.063655e-002, 1.160588e-002, 1.749516e-002, 1.928565e-002, 3.957349e-004, -1.553316e-002, -9.020752e-003, 1.176257e-002, 4.185618e-002, 5.180246e-002, 2.225888e-002, -4.551722e-003, -1.813210e-003, 3.319839e-002, 5.812111e-002, 4.933013e-003, 1.009555e-002, 6.767246e-002, 6.466694e-002, 5.118236e-002, 4.181937e-002, 3.952820e-002, 4.801229e-002, 6.164903e-002, 3.004083e-002, -5.491825e-003, 1.702985e-002, 4.927503e-002, 4.911930e-002, 4.505892e-002, 4.409689e-002, 4.008576e-002, 1.990310e-002, 1.653717e-002, 1.164124e-002, 1.849417e-002, 3.467376e-002, 4.926468e-002, 5.024379e-002, 2.858129e-002, 9.191397e-003, 1.322360e-002, 4.112803e-002},
{9.846260e-002, -1.155689e-002, -6.448939e-002, -3.658844e-002, -1.877163e-002, -1.993510e-002, -2.268726e-002, -1.618488e-002, 1.095731e-003, 1.027517e-002, 1.183664e-002, 2.643280e-003, 6.679572e-003, 2.109368e-002, 3.725598e-002, 4.048996e-002, 3.251093e-002, 1.987868e-002, 1.024179e-003, -2.273699e-002, -2.316781e-002, -2.177691e-002, -1.586813e-002, -1.753087e-002, -2.510024e-002, -2.844502e-002, -2.670361e-002, 6.421688e-003, 6.295898e-002, 1.404900e-002, -4.021296e-002, -8.842367e-003, -4.019220e-004, -2.878054e-002, -4.075445e-002, -3.649352e-002, -2.151013e-002, -9.758046e-003, -1.344597e-002, -1.348880e-002, -1.643825e-002, -1.396254e-002, 1.300737e-002, 4.830482e-002, 6.549232e-002, 5.827980e-002, 3.914325e-002, 9.484905e-003, -1.926668e-002, -2.846245e-002, -1.969367e-002, -9.002489e-003, -3.786526e-003, 1.946580e-003, -4.491526e-003, -2.302340e-002, -1.595392e-002, 2.685340e-002, 2.163112e-003, 2.043043e-002, 2.816756e-002, -8.155918e-003, -3.376441e-002, -3.157706e-002, -2.019811e-002, -2.005312e-002, -2.373853e-002, -1.873371e-002, -1.001938e-002, -8.905005e-003, -1.157353e-002, 2.718296e-003, 3.679337e-002, 6.271153e-002, 5.943029e-002, 3.224001e-002, -1.281106e-002, -4.936300e-002, -5.508737e-002, -3.295711e-002, -1.667229e-002, -6.504258e-004, 1.015097e-002, 1.037066e-002, 4.104209e-003, -5.898420e-003, 1.231601e-003, 2.577574e-002, 3.713309e-002, 1.393850e-002, -1.137532e-002, -2.057359e-002, -1.323459e-002, -2.484670e-002, -2.274405e-002, -8.903613e-003, 2.926329e-002, 5.282931e-002, 4.383490e-002, 1.200950e-002, 2.510693e-003, 2.389192e-002, 5.237673e-002, 4.512399e-002, 9.865384e-003, -4.126306e-002, -7.825744e-002, -8.637095e-002, -5.625906e-002, -2.260084e-002, -8.726799e-003, -8.166897e-004, 4.624338e-003, 7.742143e-003, 7.383187e-003, 1.862810e-003, 1.405886e-002, 1.991442e-002, 1.205053e-002, 5.796345e-003, 6.494523e-003, -1.260875e-002, -4.340678e-002, -2.710643e-002, 2.357364e-002, 7.536806e-002, 9.975132e-002, 8.328274e-002, 3.622987e-002, 7.597992e-003, 1.682260e-002, 4.162803e-002, 3.611956e-002, 9.781248e-003, -3.773298e-002, -7.251064e-002, -7.463159e-002, -5.053725e-002, -1.634225e-002, -1.034703e-002, -1.055421e-002, -1.088468e-002, -2.029416e-003, 7.885707e-003, 1.326455e-002, -1.056744e-002, 9.368018e-003, 1.847907e-002, 2.279383e-002, 5.532316e-003, -3.507872e-002, -5.933933e-002, -3.920210e-002, 4.547089e-003, 4.911238e-002, 7.496832e-002, 6.482764e-002, 2.558596e-002, 3.472451e-004, 3.622990e-003, 3.655619e-002, 4.968376e-002, 2.804335e-002, -9.608476e-003, -4.966253e-002, -6.004782e-002, -3.783995e-002, -9.336506e-003, -2.595371e-003, -1.837094e-002, -1.918734e-002, -5.635128e-003, 1.648026e-003, 1.287415e-002, -1.771274e-002, 8.876575e-003, 2.474353e-002, 1.550174e-002, -8.114513e-003, -3.526444e-002, -5.031804e-002, -4.580311e-002, -3.654177e-002, -1.000803e-002, 1.847426e-002, 2.362538e-002, 8.133701e-003, -5.708032e-003, 5.725572e-003, 3.801371e-002, 5.400771e-002, 3.748685e-002,

© ISO/IEC 2004 — All rights reserved


Copyright International Organization for Standardization
Provided by IHS under license with ISO
No reproduction or networking permitted without license from IHS
Not for Resale

8.542540e-003, -2.890762e-002, -4.752747e-002, -2.710056e-002, 2.791377e-003, 6.065049e-003, -1.257987e-002, -1.536718e-002, -2.572617e-003, 4.563388e-003, 3.548523e-003, -8.068501e-003, 1.030712e-002, 8.893448e-003, -2.208060e-003, -1.758701e-003, -9.423159e-003, -2.391063e-002, -3.990884e-002, -4.806705e-002, -3.177378e-002, 3.833700e-003, 2.047796e-002, 1.608995e-002, 5.088424e-003, 1.423590e-002, 3.307951e-002, 4.391922e-002, 2.562202e-002, 4.678060e-003, -2.171904e-002, -4.003773e-002, -3.200340e-002, -1.593325e-003, 1.716253e-002, 2.019199e-003, -8.762130e-003, 2.852087e-003, 1.870830e-002, 8.255386e-004, 4.403855e-003, -5.213926e-003, -1.221068e-002, -1.403809e-002, 8.736010e-003, 8.547077e-003, -1.136211e-002, -3.064407e-002, -4.171214e-002, -1.725062e-002, 2.269052e-002, 4.257836e-002, 3.784932e-002, 2.532290e-002, 2.606940e-002, 2.944030e-002, 2.960739e-002, 1.168029e-002, -4.538226e-003, -1.840293e-002, -2.528156e-002, -2.912970e-002, -1.950688e-002, -3.366692e-003, 5.376027e-003, -6.087626e-003, 6.814736e-003, 2.277774e-002, 7.497820e-003, 9.659296e-003, -2.717045e-002, -3.521026e-002, -1.200491e-002, 1.883032e-002, 6.917694e-003, -1.845067e-002, -3.504641e-002, -2.765643e-002, 3.539828e-003, 4.336032e-002, 5.995293e-002, 5.744697e-002, 4.225718e-002, 3.491092e-002, 2.143756e-002, 9.147378e-003, -4.403532e-003, -1.702516e-002, -1.825125e-002, -1.943334e-002, -2.817314e-002, -3.383286e-002, -3.290526e-002, -2.325457e-002, -1.434394e-002, 1.742193e-003, 1.467528e-002, 4.463543e-003, 2.078760e-002, -2.635057e-002, -3.414832e-002, -3.491155e-003, 1.415227e-002, -5.060890e-003, -2.151231e-002, -2.465667e-002, -6.196051e-003, 1.847381e-002, 4.835364e-002, 6.926786e-002, 5.940034e-002, 4.260089e-002, 2.396702e-002, -2.357989e-003, -2.150814e-002, -2.172701e-002, -1.923687e-002, -9.982063e-003, -5.915130e-003, -1.088407e-002, -2.961264e-002, -4.832166e-002, -4.857629e-002, -4.040697e-002, -1.409484e-002, 5.038655e-003, -7.719433e-004, 3.641590e-002, -1.485485e-002, -2.431102e-002, 3.420847e-003, 1.546658e-002, 3.803860e-004, -7.977535e-004, 1.009074e-002, 2.228655e-002, 3.607316e-002, 4.408629e-002, 4.959215e-002, 4.049389e-002, 1.357777e-002, -1.044806e-002, -3.052812e-002, -4.451734e-002, -3.651851e-002, -1.488868e-002, 4.166773e-003, 2.445820e-002, 2.682774e-002, 1.567664e-003, -2.722207e-002, -4.517686e-002, -5.196937e-002, -2.505085e-002, 9.468783e-003, 1.899295e-003, 4.172621e-002, 4.280084e-003, -7.552364e-003, 9.685640e-003, 1.270749e-002, 4.226537e-003, 1.503810e-002, 2.414667e-002, 2.773830e-002, 2.661085e-002, 1.797291e-002, 1.119478e-002, 4.158171e-003, -1.729981e-002, -3.624102e-002, -4.655939e-002, -5.633538e-002, -4.879636e-002, -1.874795e-002, 1.118508e-002, 3.828321e-002, 4.846869e-002, 3.759001e-002, 1.532649e-002, -9.484067e-003, -1.904767e-002, -1.979421e-003, 2.783810e-002, 1.238976e-002, 3.700899e-002, 2.032971e-002, 4.717537e-003, -1.404340e-003, -1.088027e-002, -1.692960e-002, -1.252033e-002, -9.351522e-003, -8.567220e-003, -1.250219e-002, -2.508520e-002, -2.273129e-002, -2.175244e-002, -2.101892e-002, -2.977225e-002, -3.305539e-002, -3.544325e-002, -4.173167e-002, -3.129584e-002, -1.355931e-002, 8.758233e-003, 2.558798e-002, 3.298790e-002, 2.309040e-002, 5.583865e-003, 6.964012e-003, 2.844040e-002, 5.025773e-002, 2.105435e-002, 1.839546e-002, 1.174360e-002, -2.421522e-003, -7.158593e-003, -1.487000e-002, -6.904571e-003, 5.537882e-003, 1.189941e-002, -5.132161e-003, -3.072666e-002, -5.257214e-002, -3.230991e-002, -6.674521e-003, 9.749156e-003, 1.706692e-002, 2.462794e-002, 1.612689e-002, -1.670947e-002, -3.734813e-002, -3.414450e-002, -8.858783e-003, 1.898312e-002, 2.268105e-002, 1.175210e-002, -6.352345e-003, -1.239919e-002, 1.877522e-002, 3.816938e-002, 2.587635e-002, -2.013654e-002, 5.047562e-003, 2.771053e-002, 2.470310e-002, 2.916158e-003, 1.800542e-003, 1.586668e-002, 2.516324e-002, 9.453464e-003, -3.026777e-002, -5.989496e-002, -4.602358e-002, -2.334196e-003, 2.861802e-002, 3.905450e-002, 3.179149e-002, -1.345169e-003, -5.136536e-002, -5.818678e-002, -1.971719e-002, 3.035223e-002, 4.679831e-002, 4.241502e-002, 1.061232e-002, 4.649008e-003, 9.446864e-003, 6.263066e-003, 3.259224e-003, 5.172249e-003, -5.359139e-002, 9.458401e-004, 3.745411e-002, 3.157880e-002, 3.204913e-002, 2.382951e-002, 4.553534e-003, -1.073628e-002, -1.749571e-002, -3.166608e-002, -4.880030e-002, -6.405343e-002, -4.792648e-002, -2.947717e-002, -1.584453e-002, -4.432049e-002, -8.444611e-002, -8.416741e-002, -4.050602e-002, 4.463319e-003, 1.385190e-002, 3.251585e-003, 1.419970e-003, -5.090461e-003, 4.214134e-003, 2.973115e-002, 4.422308e-002, 5.270448e-003, -1.042739e-002, -6.174487e-002, 7.859358e-003, 1.761874e-002, 3.362600e-002, 6.219100e-002, 5.879540e-002, 2.384084e-002, -3.167555e-002, -6.300282e-002, -3.666307e-002, 8.687921e-003, -1.617180e-003, -6.360886e-002, -6.922370e-002, -4.450041e-002, -6.748468e-002, -7.553171e-002, -1.584909e-003, 2.746999e-002, -2.366693e-002, -6.194118e-002, -5.120575e-002, -9.824093e-003, 2.838959e-002, 4.389627e-002, 2.668724e-002, 3.025852e-003, -1.367732e-002, -2.071648e-002, -1.735467e-002, 1.336830e-002, 1.137573e-002, 6.477529e-002, 7.546197e-002, 3.140689e-002, 1.378704e-002, -1.290645e-002, -6.926315e-002, -6.871141e-002, 1.849558e-002, 9.080183e-002, -2.267385e-002, -7.748733e-002, -4.702800e-002, -4.736682e-002, -1.514648e-002, 5.023957e-002, 1.265821e-002, -5.337733e-002, -4.588174e-002, -3.281822e-002, -1.701217e-002, 4.638438e-002, 7.880922e-002, 2.863641e-002, -3.885719e-002, -4.139784e-002, -3.033756e-002, 5.022361e-003, 2.767770e-002, 2.597639e-002, 5.132843e-002, 3.461244e-002, -3.660374e-002, 5.614015e-002, 1.130294e-001, 6.646829e-002, -4.222774e-002, -3.916877e-002, 3.400054e-002, -7.628652e-002, -1.490280e-001, -1.273731e-001, -9.622732e-002, -5.819370e-002, -6.984148e-003, -1.121647e-002, 1.503601e-002, 1.144848e-001, 4.893844e-002, -5.027135e-002, 3.379492e-002, 6.181451e-002, -


© ISO/IEC 2004 — All rights reserved

Copyright International Organization for Standardization
Provided by IHS under license with ISO
No reproduction or networking permitted without license from IHS
Not for Resale

8.761463e-003, -2.874539e-002, -8.157631e-004, -1.326943e-002, 2.515709e-002, 4.672372e-002, 1.512758e-002, -6.396709e-003, 2.563285e-002, -6.362580e-002, -4.654986e-002, 7.760928e-002, 9.469226e-002, -1.864227e-002, -7.860341e-002, -4.835994e-002, -1.108876e-001, -9.822110e-002, -6.648682e-002, -6.842138e-002, -9.871019e-002, -5.782294e-002, -2.339302e-002, 3.819084e-002, 1.092124e-001, 4.998422e-003, -6.524458e-002, 8.166925e-002, 4.657318e-002, -4.117154e-002, -6.010311e-003, 3.578198e-002, 2.000214e-002, -1.893936e-003, 2.216716e-002, -8.847322e-003, -2.017890e-002, -1.845675e-002, -5.237245e-002, -5.048402e-002, 5.743360e-003, -1.225747e-003, -4.420345e-002, -6.572452e-002, -5.148957e-002, -5.601464e-002, 1.747368e-002, 2.480436e-002, -4.916085e-003, -5.953645e-002, -4.106288e-002, -2.899144e-002, 6.851105e-003, 4.272507e-003, -4.008478e-002, -6.867020e-002, -8.478399e-003, 1.987114e-003, -4.641502e-002, -3.396302e-002, -1.485360e-003, -3.292169e-002, 3.618599e-004, 7.733808e-003, -1.412474e-002, -9.909740e-003, 2.724838e-002, 5.541579e-002, 7.413361e-002, 6.656512e-002, 2.771023e-002, -2.117552e-002, -2.931045e-002, -2.771331e-002, 4.696065e-003, 5.554491e-002, 5.419801e-002, 1.786266e-002, -1.709996e-002, -8.288501e-003, 3.536124e-004, 3.022744e-002, 6.441647e-002, 7.572319e-002, 6.629291e-002, 6.709778e-002, 4.142612e-002, -1.691788e-002, -3.156899e-002, -1.874010e-002, -6.154723e-002, 2.078701e-003, 1.208582e-002, -1.443273e-002, -2.579645e-002, 3.996133e-003, 4.543580e-002, 6.476062e-002, 5.592020e-002, 3.686701e-002, 2.715705e-002, 1.498184e-002, -1.241932e-002, 1.549225e-002, 2.946625e-002, 3.597903e-002, 4.103437e-003, -1.626914e-002, -1.116709e-003, 4.735485e-002, 3.944909e-002, 4.731592e-002, 6.685063e-002, 7.055593e-002, 5.200778e-002, 1.816099e-002, -5.149462e-003, 5.534370e-003, -7.140798e-003, -5.937167e-002, 8.811317e-004, 1.238479e-002, -1.372544e-002, -2.561048e-002, -2.638266e-003, 2.839217e-002, 5.106610e-002, 6.369290e-002, 7.055829e-002, 4.922121e-002, 5.053489e-003, -1.930617e-002, -2.922144e-002, -2.002246e-002, 4.706113e-003, -2.462443e-002, -3.613655e-002, -8.746362e-003, 2.365029e-002, 6.206270e-002, 5.197008e-002, 4.011808e-002, 3.511158e-002, 2.454824e-002, 1.764559e-002, 2.589005e-002, 3.794460e-002, 1.766410e-002, -1.887860e-002, 2.032457e-002, 1.267232e-002, -1.113912e-002, -2.910825e-002, -7.346071e-003, 2.238127e-002, 3.867757e-002, 3.903716e-002, 2.123826e-002, -1.586442e-002, -1.009861e-002, -1.736897e-002, -3.766540e-002, -4.711414e-003, 2.234018e-002, -7.405129e-004, -2.950066e-002, -1.558370e-003, 1.409817e-002, 7.111404e-003, 2.460800e-002, 2.228141e-002, 1.356698e-002, 4.284067e-003, 6.126618e-003, 2.048861e-002, 4.561505e-002, 5.118810e-002, 2.872692e-002, 4.233199e-002, 3.193431e-002, -6.965338e-003, -3.632283e-002, -3.797174e-002, -3.176063e-002, -2.585042e-002, -3.130241e-002, -3.450842e-002, -2.786249e-003, 3.760300e-002, 3.389504e-002, 3.605715e-002, 7.899411e-002, 1.017540e-001, 9.271572e-002, 4.647362e-002, 3.211708e-002, 4.416010e-002, 1.474498e-002, -1.356290e-002, -2.808239e-002, -3.247854e-002, -2.675914e-002, -3.136259e-003, 3.718191e-002, 7.264307e-002, 8.063428e-002, 5.958447e-002},
{2.274907e-002, 1.205887e-002, 1.084640e-003, 2.364649e-003, -7.722327e-003, -3.572116e-002, -5.611693e-002, -5.124678e-002, -2.711946e-002, 4.564767e-003, 2.068458e-002, 3.556575e-002, 4.989023e-002, 4.581864e-002, 3.463907e-002, 1.618218e-002, 8.557604e-003, -8.132162e-003, -1.602853e-002, -2.061939e-002, -1.415588e-002, -1.329902e-002, -1.781155e-002, -2.678705e-002, -3.460844e-002, -4.355185e-002, -4.251967e-002, -1.076201e-002, 5.466067e-002, -3.412835e-003, -1.024004e-002, 2.607438e-003, 8.601501e-003, -1.714088e-003, -1.429015e-002, -2.575587e-002, -2.813758e-002, -2.601135e-002, -1.819565e-002, -2.864802e-003, 1.612481e-002, 3.262851e-002, 2.834321e-002, 1.123883e-002, 6.321734e-003, -5.393345e-003, -1.997212e-002, -3.281586e-002, -4.548621e-002, -4.942787e-002, -4.417136e-002, -3.170681e-002, -2.731286e-002, -2.658340e-002, -2.670921e-002, -1.890178e-002, -1.843448e-002, 4.462788e-003, -2.044908e-003, -1.983405e-003, 6.439884e-003, 1.807321e-002, 2.604041e-002, 2.363684e-002, 3.793000e-003, -2.153542e-002, -3.257020e-002, -2.724383e-002, -6.456974e-003, 2.341070e-002, 3.467398e-002, 3.559871e-002, 2.192236e-002, 2.495732e-002, 2.068495e-002, 1.240150e-002, -4.934417e-003, -2.493429e-002, -4.752114e-002, -5.236595e-002, -3.324537e-002, -1.031286e-002, -6.507702e-003, -1.114037e-002, 3.468245e-004, 1.687319e-002, 1.133928e-002, -8.081342e-003, -1.431329e-003, 1.148371e-002, 2.522832e-002, 4.006710e-002, 3.711576e-002, 3.948151e-003, -2.883488e-002, -3.707407e-002, -2.930634e-002, -8.773217e-003, 1.795616e-002, 2.912118e-002, 3.014243e-002, 2.466700e-002, 2.500729e-002, 2.374141e-002, 1.265738e-002, -6.206544e-004, -1.565516e-002, -3.233845e-002, -5.289230e-002, -3.921153e-002, -1.025871e-002, 9.294456e-003, 3.862972e-003, -1.112336e-003, 2.507623e-002, 3.522715e-002, -5.212205e-003, 2.930293e-003, 3.834513e-003, 1.704331e-002, 4.396358e-002, 3.584660e-002, 7.457248e-003, -1.206843e-002, -3.071096e-002, -3.639641e-002, -2.381606e-002, -6.309369e-003, 1.275703e-002, 2.171577e-002, 2.306220e-002, 1.872149e-002, 1.288450e-002, -7.924948e-003, -3.217099e-002, -5.711234e-002, -6.611689e-002, -7.498358e-002, -5.994375e-002, -1.911759e-002, 5.010310e-003, 1.169843e-002, -7.355196e-004, 1.035980e-002, 4.082669e-002, 1.207360e-002, 3.917650e-003, -8.851250e-003, 1.020150e-002, 4.569754e-002, 5.095113e-002, 4.431375e-002, 1.371996e-002, -1.928855e-002, -3.066327e-002, -2.739610e-002, -1.948871e-002, 7.429257e-003, 2.371678e-002, 3.464456e-002, 3.984256e-002, 3.308727e-002, 4.515805e-003, -3.579327e-002, -6.731345e-002, -8.569375e-002, -8.793573e-002, -7.146759e-002, -2.911331e-002, 7.611648e-004, 6.872646e-003, -4.433242e-004, -3.636136e-003, 3.025446e-002, 2.811336e-002, 3.745434e-003, -

© ISO/IEC 2004 — All rights reserved


Copyright International Organization for Standardization
Provided by IHS under license with ISO
No reproduction or networking permitted without license from IHS
Not for Resale

2.378450e-002, 7.823552e-003, 5.423580e-002, 6.544345e-002, 5.489294e-002, 1.954241e-002, -9.266177e-003, -2.029689e-002, -2.654781e-002, -1.584745e-002, 9.750917e-003, 3.162426e-002, 5.411340e-002, 6.759197e-002, 6.945786e-002, 4.484059e-002, 7.602965e-004, -3.442750e-002, -6.047171e-002, -6.559309e-002, -4.545571e-002, -1.530176e-003, 2.244302e-002, 2.610853e-002, 1.507370e-002, 7.581701e-003, 2.187686e-002, 3.370695e-002, -3.359164e-003, -2.524702e-002, 1.146713e-002, 3.412978e-002, 2.534595e-002, 1.131643e-002, -7.162856e-003, -2.071773e-002, -2.861974e-002, -3.573259e-002, -2.609234e-002, -4.848442e-003, 1.736606e-002, 4.030871e-002, 6.447434e-002, 8.288491e-002, 6.812398e-002, 3.100686e-002, -3.835083e-003, -1.975844e-002, -1.716210e-002, 4.883018e-003, 4.873108e-002, 5.987989e-002, 5.395650e-002, 4.247522e-002, 2.742673e-002, 2.010183e-002, 1.915717e-002, -1.269348e-002, -1.674940e-002, 1.023422e-002, 3.249895e-003, -2.501958e-002, -4.633542e-002, -4.825800e-002, -4.630131e-002, -4.483357e-002, -4.492896e-002, -3.922337e-002, -3.121137e-002, -2.668837e-002, -1.231778e-002, 1.475271e-002, 5.283922e-002, 5.899493e-002, 3.328060e-002, 6.417135e-003, 1.093888e-003, 1.862993e-002, 4.885986e-002, 9.259249e-002, 1.007229e-001, 7.655257e-002, 5.192786e-002, 3.851946e-002, 2.125010e-002, 2.223840e-003, -1.234623e-002, -6.543004e-003, -1.333896e-003, -2.230674e-002, -4.727060e-002, -6.307926e-002, -5.707698e-002, -4.585750e-002, -3.602802e-002, -3.723707e-002, -4.062981e-002, -5.207430e-002, -5.920811e-002, -5.957914e-002, -4.055056e-002, 4.213388e-003, 2.340837e-002, 1.469817e-002, -9.076495e-003, -9.760322e-003, 1.674608e-002, 5.683656e-002, 1.069664e-001, 1.224348e-001, 8.766431e-002, 5.003629e-002, 3.895071e-002, 2.256431e-002, 4.126331e-004, -4.986315e-003, 7.445525e-004, -1.143772e-002, -2.376886e-002, -4.045583e-002, -4.163490e-002, -3.136622e-002, -5.795943e-003, -2.496487e-005, 2.111796e-003, -4.590495e-004, -2.289775e-002, -4.500880e-002, -5.465050e-002, -4.843541e-002, -1.481163e-002, 7.052683e-003, 7.244036e-003, -1.081154e-002, -2.598900e-002, -1.329489e-002, 2.449379e-002, 7.149907e-002, 9.428975e-002, 7.060768e-002, 2.938490e-002, 2.357452e-002, 1.146317e-002, 8.093930e-003, 7.711834e-003, 9.442002e-003, 4.351975e-003, 5.208766e-004, -1.120349e-002, -1.239184e-002, -7.191893e-003, 1.012655e-002, 1.736102e-002, 2.977516e-002, 2.998074e-002, 7.022284e-003, -1.361387e-002, -2.451691e-002, -1.926466e-002, 1.321680e-002, 3.008204e-002, 3.012127e-002, 6.246879e-003, -2.374944e-002, -3.141957e-002, -1.633782e-002, 8.837748e-003, 3.035086e-002, 2.513064e-002, -5.395658e-003, -6.201804e-003, -2.779241e-003, 9.567716e-003, 3.016814e-003, 2.086282e-002, 3.003324e-002, 2.716906e-002, 1.494527e-002, 2.364041e-003, -3.756308e-003, -1.567267e-003, 5.577479e-003, 2.571159e-002, 3.975457e-002, 2.901990e-002, 1.195967e-002, 9.125423e-003, 1.812439e-002, 4.851230e-002, 5.855105e-002, 5.213548e-002, 1.511464e-002, -2.228141e-002, -4.431712e-002, -3.664704e-002, -1.839163e-002, -8.363450e-003, -8.151626e-003, -3.229607e-002, -3.316075e-002, -1.408889e-002, -5.797627e-003, -1.138284e-002, 2.009328e-002, 4.045398e-002, 4.160283e-002, 3.448422e-002, 1.061504e-002, -1.976181e-002, -3.975422e-002, -3.224891e-002, -1.153096e-002, 1.860165e-002, 2.755267e-002, 1.596575e-002, 9.010367e-003, 1.770714e-002, 3.340377e-002, 2.415715e-002, -3.830400e-003, -4.817028e-002, -6.692755e-002, -5.694884e-002, -3.423364e-002, -9.311297e-003, -1.302721e-003, -2.187786e-002, -5.486404e-002, -5.673068e-002, -2.808969e-002, -3.297187e-002, -3.807592e-002, -3.061964e-003, 2.323317e-002, 4.616448e-002, 5.517455e-002, 4.054535e-002, 1.124126e-002, -2.322903e-002, -3.216106e-002, -1.718280e-002, 3.593327e-003, 6.701606e-003, -1.209070e-002, -2.964280e-002, -2.881105e-002, -2.857135e-002, -4.435307e-002, -7.207055e-002, -8.020817e-002, -5.205178e-002, -1.709434e-002, 1.226401e-002, 2.090871e-002, 1.648413e-002, -1.439095e-002, -5.834657e-002, -7.008395e-002, -4.277486e-002, -4.285911e-002, -4.782720e-002, -1.069434e-002, 2.730475e-002, 6.981004e-002, 7.286889e-002, 3.353892e-002, -1.924527e-002, -5.683732e-002, -5.354420e-002, -1.933110e-002, 1.443198e-002, 9.707518e-003, -9.541487e-003, -2.969803e-002, -3.190426e-002, -1.892722e-002, -2.493081e-002, -3.614316e-002, -2.447445e-002, -1.291210e-002, -5.066797e-003, 1.459853e-002, 2.446985e-002, 1.699650e-002, -1.492148e-002, -3.822148e-002, -3.683598e-002, -2.775655e-002, -4.604023e-003, -1.067570e-002, -1.829093e-003, 5.899752e-002, 1.025339e-001, 8.718240e-002, 3.704397e-002, -2.192409e-002, -5.247680e-002, -6.234439e-002, -3.670037e-002, 9.788784e-003, 2.355471e-002, 2.488630e-002, 1.687820e-002, 2.533943e-002, 3.500425e-002, 2.941069e-002, 9.786841e-003, -1.187037e-002, -3.614271e-002, -4.266314e-002, 7.028045e-003, 6.692349e-002, 8.524511e-002, 5.646712e-002, 5.657761e-003, 1.571457e-002, 2.515760e-002, 3.170792e-002, -3.424798e-002, -3.022914e-002, 1.870982e-002, 2.967933e-002, 2.190871e-003, -2.151727e-002, -3.835841e-002, -4.163752e-002, -2.409480e-002, -1.005348e-002, 6.324830e-003, 2.572860e-002, 3.525396e-002, 2.797277e-002, 4.317503e-002, 3.941861e-002, 2.637377e-002, 1.241717e-003, -1.232960e-002, -1.316074e-002, 7.619789e-003, 3.109166e-002, 4.616914e-002, 5.950765e-002, 5.873583e-002, 1.014555e-002, 1.872254e-002, 5.740329e-002, 2.674312e-002, -4.576642e-002, -1.141163e-002, 1.519849e-002, -1.775497e-002, -2.902180e-002, -2.260833e-002, -1.892352e-002, -1.520937e-002, -5.565080e-003, 1.165509e-002, 2.036922e-002, 2.103953e-002, 5.824583e-002, 6.070765e-002, 4.923934e-002, 1.406069e-002, 1.135462e-002, 6.520434e-003, 1.394393e-002, 3.761290e-002, 6.601948e-002, 4.341754e-002, -1.886096e-002, -6.609411e-002, -5.982219e-002, -5.175641e-002, -2.482933e-002, 4.239231e-002, 3.609864e-002, 9.628279e-003, 5.372915e-002, 2.668200e-002, -7.451474e-003, 1.712321e-002, 2.328593e-002, 3.020711e-002, 5.861786e-002,


© ISO/IEC 2004 — All rights reserved

Copyright International Organization for Standardization
Provided by IHS under license with ISO
No reproduction or networking permitted without license from IHS
Not for Resale

3.898326e-002, 2.923219e-002, 2.642375e-002, -1.143333e-004, 4.748392e-002, 5.121289e-002, 1.835933e-002, -2.342932e-002, 7.089830e-003, 1.229267e-002, -3.310063e-002, -1.031018e-002, 5.814702e-002, 4.614129e-002, -2.003040e-002, -4.563412e-002, -4.240010e-002, -4.065941e-002, -2.083445e-002, 6.875443e-003, 1.731938e-002, 9.272361e-003, 2.413269e-002, -9.709375e-003, 9.946020e-003, 5.699177e-002, -9.431554e-004, -2.317044e-002, 7.057941e-002, 7.869848e-002, 3.920398e-002, 1.313006e-002, -1.573382e-002, 1.113940e-002, 6.840366e-003, -2.164406e-002, -2.443169e-002, -1.193289e-003, 9.718488e-003, 9.081290e-003, -4.611160e-003, 5.803008e-003, -1.093246e-002, -7.467583e-002, -1.455905e-002, 4.260703e-002, 4.956770e-002, 3.760308e-002, -7.417680e-003, 9.811956e-003, 1.183299e-002, 1.207268e-002, -1.318023e-002, -3.823878e-003, 6.677773e-003, -2.021558e-002, -8.144462e-003, 3.079911e-002, 2.996118e-002, 7.686311e-003, -9.411893e-003, -3.059865e-002, -1.094320e-002, -2.186536e-002, -3.046871e-002, -2.794260e-003, 8.006079e-003, 3.005258e-002, 3.204473e-002, 2.153246e-002, -1.796211e-002, -4.722735e-002, -7.009851e-002, -7.593911e-002, -1.713619e-002, 4.592061e-002, 5.448628e-002, 8.318643e-003, 1.268202e-002, 3.461563e-002, 2.077498e-002, -1.652986e-002, -3.338877e-002, -5.213424e-002, -6.860063e-002, -6.219369e-002, -5.124455e-002, -5.518311e-002, -5.823775e-002, -4.410324e-002, -3.175095e-002, -2.172440e-002, -3.512366e-002, -4.140914e-002, -1.160981e-002, -5.968127e-003, -2.725806e-002, -1.635922e-002, -1.101823e-002, -2.366409e-002, -3.818475e-002, -4.880099e-002, -3.894110e-002, -1.514089e-002, 3.306207e-002, 6.173296e-002, 2.677053e-002, 1.147575e-002, 3.523181e-002, 1.915922e-002, -1.704461e-002, -4.629112e-002, -7.569286e-002, -8.574670e-002, -7.725229e-002, -7.383147e-002, -7.758726e-002, -6.660549e-002, -2.469575e-002, -2.497293e-002, -3.152199e-002, -3.285510e-002, -4.167019e-002, -2.843610e-002, 7.491256e-003, -4.449644e-002, -6.458043e-002, -5.320079e-002, -4.511163e-002, -4.175123e-002, -3.259628e-002, -5.729201e-003, 1.052364e-002, 2.605626e-002, 3.517661e-002, 2.213447e-002, -1.340284e-002, 4.969726e-003, 2.054319e-002, 9.216895e-003, -7.571355e-003, -3.134918e-002, -3.697978e-002, -2.840572e-002, -1.848891e-002, -3.089439e-002, -1.927231e-002, 3.261354e-003, -1.497378e-002, -2.178875e-002, -1.116941e-002, -1.034518e-002, -3.049082e-002, 4.278850e-003, 1.352706e-004, -2.951553e-002, -4.211689e-002, -2.849953e-002, -9.687801e-003, 1.543819e-002, 3.738173e-002, 3.494140e-002, 8.374553e-003, -1.541128e-002, -1.136995e-002, -4.073299e-002, -2.925073e-002, -1.665599e-002, 1.902986e-002, 5.114566e-002, 6.047631e-002, 7.131538e-002, 7.843863e-002, 6.226952e-002, 1.140336e-002, -4.470856e-003, 1.916485e-002, 6.478918e-003, -3.352515e-003, 2.902159e-002, 4.281846e-002, -2.148030e-002, -2.766397e-002, 9.549817e-004, 3.127985e-002, 3.329239e-002, 3.313593e-002, 4.605871e-002, 6.093587e-002, 6.454914e-002, 3.669645e-002, -3.415715e-002, -7.635503e-002, -4.986724e-002, -6.108503e-002, -6.361657e-002, -4.441921e-002, -9.502651e-003, 3.957959e-002, 8.170055e-002, 1.019538e-001, 9.799574e-002, 5.417339e-002, -3.411912e-003, -4.538817e-003, 3.986259e-002, 1.811221e-002, 1.727337e-003, 5.043093e-002, 7.422816e-002, 1.199264e-002, -3.629847e-002, -2.420087e-002, 9.058674e-003, 3.795585e-002, 5.021836e-002, 5.463303e-002, 4.926068e-002, 2.855596e-002, -2.090061e-002, -8.380164e-002, -1.115797e-001, -6.249868e-002},
{-2.023614e-002, -4.492126e-003, 1.732564e-004, 2.605610e-004, 1.953840e-002, 3.533321e-002, 4.211945e-002, 5.022811e-002, 5.435426e-002, 4.675540e-002, 3.240968e-002, 1.107421e-002, -1.044062e-002, -3.540353e-002, -4.922180e-002, -4.240982e-002, -2.900775e-002, -1.365991e-002, 4.795134e-003, 1.395520e-002, 4.315803e-003, -1.477234e-002, -2.170860e-002, -1.794126e-002, -1.701730e-002, 4.278531e-003, 2.164111e-002, -1.162554e-002, -8.786123e-002, -3.453209e-003, 7.670126e-004, -1.322207e-002, -9.199270e-003, 7.155403e-003, 7.718792e-003, 1.597182e-002, 3.080595e-002, 3.999139e-002, 5.120666e-002, 4.632179e-002, 2.240444e-002, -4.279524e-003, -3.291262e-002, -5.578019e-002, -6.010147e-002, -4.794837e-002, -2.027149e-002, 7.400125e-003, 2.400740e-002, 3.021191e-002, 1.322866e-002, -5.472203e-003, -6.510222e-003, -2.256638e-003, 7.421768e-003, 1.221368e-002, 2.120686e-002, -1.768658e-002, 6.212598e-003, -1.208683e-002, -1.841823e-002, -1.397480e-002, -1.118363e-002, -1.035402e-002, 6.287069e-003, 3.496050e-002, 5.060481e-002, 6.485107e-002, 5.903091e-002, 3.468009e-002, -2.716544e-003, -3.903270e-002, -6.423013e-002, -7.499222e-002, -6.615135e-002, -3.371443e-002, 1.006632e-003, 2.156494e-002, 2.744698e-002, 2.270727e-002, 9.500841e-003, 1.021985e-003, 4.239269e-003, 1.006108e-002, 7.068979e-003, 6.049869e-003, 1.437925e-002, 1.977067e-003, -1.449137e-002, -2.405980e-002, -1.294730e-002, -1.152509e-002, -3.636114e-003, 1.974377e-002, 3.302978e-002, 4.471890e-002, 5.044411e-002, 4.955956e-002, 3.342942e-002, 1.638568e-003, -3.704882e-002, -6.156929e-002, -6.860903e-002, -5.505758e-002, -3.122886e-002, -1.857175e-004, 1.431229e-002, 2.296928e-002, 1.896574e-002, 6.781659e-003, -5.085752e-003, -1.780414e-003, 7.778763e-003, 1.255544e-002, 1.096378e-003, 4.777520e-003, 6.502611e-003, -1.542748e-002, -1.567322e-002, -7.039274e-003, -7.232993e-003, 6.458706e-003, 1.941297e-002, 2.744063e-002, 3.390198e-002, 4.418954e-002, 4.677927e-002, 3.090131e-002, 4.647185e-003, -2.630867e-002, -4.445483e-002, -4.224983e-002, -2.519823e-002, 2.186814e-003, 3.172589e-002, 3.594267e-002, 3.466585e-002, 3.054780e-002, 2.132987e-002, 6.836317e-003, -2.008390e-003, 3.844344e-005, 1.555480e-002, 8.267682e-003, -9.003569e-003, 5.920966e-003, -4.502792e-003, 3.284348e-003, -1.937857e-002, -1.718084e-002, 5.527813e-003, 3.450089e-002, 4.801514e-002, 4.936938e-002, 5.007758e-002, 3.987228e-002, 1.684302e-002, -3.054793e-003, -2.744987e-002, -4.329773e-002, -

© ISO/IEC 2004 — All rights reserved


Copyright International Organization for Standardization
Provided by IHS under license with ISO
No reproduction or networking permitted without license from IHS
Not for Resale

4.137383e-002, -1.857759e-002, 1.468460e-002, 3.906133e-002, 4.818045e-002, 4.960300e-002, 4.563987e-002, 3.447736e-002, 1.493148e-002, -2.480750e-003, -7.560556e-003, 3.662144e-003, 1.359289e-003, -4.665226e-004, -1.037108e-003, 1.292409e-002, -6.622123e-003, -4.302651e-002, -3.056591e-002, 9.064572e-003, 4.683594e-002, 5.846171e-002, 5.046296e-002, 3.460868e-002, 1.245607e-002, -8.025872e-003, -2.403887e-002, -4.474226e-002, -6.804644e-002, -6.969796e-002, -4.485590e-002, -4.724463e-003, 2.069679e-002, 3.679647e-002, 4.677861e-002, 5.014098e-002, 2.969694e-002, 6.737164e-003, -1.961344e-002, -2.790799e-002, -5.221800e-003, -9.483868e-003, -1.003583e-002, -7.588553e-003, 9.371452e-003, -2.851894e-002, -6.285619e-002, -4.211842e-002, 8.744699e-003, 4.376882e-002, 5.059631e-002, 3.552387e-002, 1.461901e-002, -9.274705e-003, -2.594961e-002, -4.256498e-002, -5.771604e-002, -8.257932e-002, -8.261369e-002, -5.454159e-002, -1.526054e-002, 1.111697e-002, 2.694680e-002, 4.122180e-002, 4.809689e-002, 2.079789e-002, -9.262563e-003, -4.514676e-002, -5.368927e-002, -2.466895e-002, -9.354569e-003, -1.988594e-002, -1.648217e-002, -6.814291e-003, -4.040398e-002, -6.198058e-002, -4.505480e-002, 2.443351e-003, 3.945832e-002, 4.447630e-002, 3.132134e-002, 4.443531e-003, -1.926289e-002, -2.684489e-002, -3.558769e-002, -4.519174e-002, -6.574237e-002, -6.947755e-002, -4.490076e-002, -1.046906e-002, 1.457331e-002, 2.732113e-002, 3.520262e-002, 4.134940e-002, 1.848008e-002, -1.392581e-002, -5.162684e-002, -6.124874e-002, -2.770878e-002, -2.635830e-003, -2.082660e-002, -3.141258e-002, -2.586697e-003, -2.709051e-002, -5.409463e-002, -4.600007e-002, 2.458355e-003, 3.277060e-002, 4.017167e-002, 2.416864e-002, 3.493920e-003, -1.139930e-002, -9.394277e-003, -1.552960e-002, -1.630267e-002, -2.873909e-002, -2.768863e-002, -9.499605e-003, 9.096170e-003, 2.798917e-002, 3.841077e-002, 4.017724e-002, 3.812156e-002, 2.679718e-002, 7.042965e-003, -2.827139e-002, -4.004631e-002, -1.414599e-002, 1.983061e-002, -1.740847e-002, -3.610677e-002, 2.280060e-002, -1.503610e-002, -5.335629e-002, -3.149507e-002, 8.392951e-003, 2.509574e-002, 2.684766e-002, 1.039501e-002, -6.017796e-003, -1.295770e-002, -4.341734e-003, 3.272638e-003, 6.081435e-003, 8.698963e-003, 1.533244e-002, 3.123614e-002, 4.066306e-002, 5.297674e-002, 5.384255e-002, 4.629263e-002, 4.143002e-002, 4.254019e-002, 3.385016e-002, 5.494729e-003, -1.494223e-002, 7.888558e-003, 4.007190e-002, -1.361062e-002, -2.397580e-002, 4.358164e-002, -1.452970e-002, -5.421177e-002, -2.636767e-002, -1.351008e-003, 3.135713e-003, -6.113035e-003, -1.913523e-002, -3.457505e-002, -3.145556e-002, -1.319463e-002, 5.881584e-003, 2.406203e-002, 3.205941e-002, 3.624776e-002, 4.498442e-002, 4.709079e-002, 4.879370e-002, 4.325066e-002, 3.175190e-002, 3.040670e-002, 3.572244e-002, 3.709885e-002, 2.086476e-002, -6.010921e-003, 1.584253e-002, 4.168219e-002, -1.668115e-002, -1.919483e-002, 3.736268e-002, -2.260282e-002, -5.287185e-002, -2.115439e-002, -3.620559e-003, -9.612392e-003, -3.026130e-002, -5.041557e-002, -5.686551e-002, -4.861379e-002, -2.723461e-002, -3.670485e-004, 2.061676e-002, 2.856597e-002, 2.914276e-002, 3.515228e-002, 2.964711e-002, 1.672694e-002, 5.082224e-003, -7.696912e-003, -7.307400e-003, 9.512738e-003, 2.236535e-002, 1.286172e-002, -2.080853e-002, -8.387333e-003, 1.271638e-002, -3.769433e-002, -1.904634e-002, 2.649580e-002, -1.536925e-002, -1.546893e-002, 1.846861e-002, 2.254676e-002, 3.650747e-003, -2.897609e-002, -5.342488e-002, -5.999410e-002, -4.483777e-002, -2.823464e-002, -9.746982e-003, 3.971808e-003, 9.126054e-003, 1.234410e-002, 1.293155e-002, -9.072623e-004, -2.043716e-002, -2.349095e-002, -1.999412e-002, -4.138462e-003, 2.989748e-002, 5.644919e-002, 5.370250e-002, -5.062085e-003, -3.164831e-002, -1.615423e-002, -5.664332e-002, -1.433482e-002, 3.232582e-002, 2.224813e-002, 4.754127e-002, 6.881358e-002, 4.487193e-002, -9.429379e-003, -5.316765e-002, -7.239790e-002, -7.173414e-002, -3.829371e-002, -2.084430e-002, -2.446287e-002, -2.252799e-002, -2.580984e-002, -2.218438e-002, -2.022813e-002, -4.181896e-002, -6.210507e-002, -5.242546e-002, -3.007458e-002, 4.329598e-003, 5.546317e-002, 9.775926e-002, 1.117598e-001, 5.911104e-002, -3.448057e-003, -3.763773e-003, -5.242681e-002, -5.834240e-003, 2.281996e-002, 2.098996e-002, 4.597220e-002, 6.132276e-002, 4.034420e-002, -1.021928e-002, -5.311937e-002, -7.259351e-002, -5.342248e-002, -7.709703e-003, 1.680324e-002, -5.197723e-003, -2.974486e-002, -3.960195e-002, -3.159673e-002, -2.583858e-002, -3.905054e-002, -5.726078e-002, -7.355672e-002, -8.320231e-002, -6.064994e-002, -4.995102e-003, 5.621876e-002, 8.397102e-002, 4.420267e-002, 9.674829e-004, 1.475907e-002, -2.423492e-002, -7.820207e-003, -6.278223e-003, -2.547114e-003, 3.499903e-002, 4.848968e-002, 1.268590e-002, -3.421006e-002, -5.872691e-002, -6.368872e-002, -4.537591e-002, -3.730798e-003, 3.641055e-002, 1.220314e-002, -3.280955e-002, -4.106184e-002, -1.921779e-002, -1.106305e-003, 3.168902e-003, -1.466763e-002, -4.363805e-002, -6.238540e-002, -4.588063e-002, 1.715400e-002, 9.499873e-002, 1.172588e-001, 4.738664e-002, -5.895657e-002, -2.487530e-002, -2.725169e-003, -1.775625e-002, -1.635730e-002, 5.428511e-002, 1.052783e-001, 1.004145e-001, 5.171973e-002, 1.928220e-003, -1.267561e-002, -1.539928e-002, -1.203732e-002, -9.940635e-003, 2.173888e-002, 3.095200e-002, -1.780839e-002, -2.498673e-002, 5.163278e-003, 1.418100e-002, 1.780804e-002, 6.609133e-003, -2.850276e-002, -7.003142e-002, -7.888080e-002, -3.261786e-002, 5.582364e-002, 1.241922e-001, 9.786717e-002, -2.345831e-002, -4.052346e-002, -1.251988e-002, 2.695248e-004, 5.573681e-003, 6.436671e-002, 7.430385e-002, 5.262798e-002, 2.596588e-002, 1.192831e-002, 2.165492e-002, 6.821539e-002, 7.521949e-002, 9.387315e-003, -4.559287e-002, -2.398453e-004, -5.627254e-002, -5.361978e-002, -2.279085e-002, -4.009429e-002, -4.071310e-002, 9.468975e-003, 1.047124e-005, -6.629522e-002, -1.015485e-001, -


© ISO/IEC 2004 — All rights reserved

Copyright International Organization for Standardization
Provided by IHS under license with ISO
No reproduction or networking permitted without license from IHS
Not for Resale

9.771393e-002, -5.341038e-002, 3.685550e-002, 7.148014e-002, 8.878994e-003, 9.399533e-005, 8.523049e-005, -2.113948e-003, -3.382328e-002, 1.605710e-002, 2.625561e-002, 1.499605e-002, 3.696528e-002, 1.613161e-002, -2.792148e-003, 3.744232e-002, 9.627579e-002, 1.488555e-002, -6.070935e-002, -1.142638e-002, -7.764254e-002, -8.299884e-002, -4.727864e-002, -6.405183e-002, -7.814937e-002, 3.244379e-002, 5.021790e-002, -3.053912e-002, 6.784097e-003, -1.002819e-002, -6.478619e-002, -2.289274e-002, 2.606314e-002, -3.833407e-003, 1.651344e-002, 1.846765e-002, -2.763747e-002, -5.367349e-002, -3.615274e-002, -2.904679e-002, -6.288856e-002, -2.905257e-002, 1.691169e-002, -1.151380e-002, 5.336878e-003, 7.726218e-002, 1.066366e-002, -8.599382e-003, 5.212878e-002, -2.973049e-002, -3.729160e-002, -8.008248e-003, 2.707553e-002, -5.138537e-002, 4.137217e-002, 3.763141e-002, -9.565083e-002, -1.172278e-002, -8.643418e-003, -1.012778e-001, -3.746162e-002, -1.899663e-002, -3.727326e-002, 1.395312e-003, -1.971203e-002, -2.120052e-002, -2.278571e-002, -4.754125e-002, -7.020283e-002, -7.647307e-002, -4.614014e-002, -6.296410e-003, 2.697234e-002, 7.328952e-002, 4.055753e-002, -1.733525e-002, 4.666833e-002, 6.452751e-002, 7.825402e-003, 6.510776e-003, 1.196607e-002, 5.995778e-002, 1.396153e-003, 3.765800e-002, 7.639738e-002, 3.220457e-002, -2.263032e-002, -5.266779e-002, -6.113198e-002, -6.276913e-002, -7.632970e-002, -6.691664e-002, -3.183392e-003, -4.498411e-002, -1.732929e-002, 1.663581e-002, 3.901493e-004, -2.064421e-002, -2.441039e-002, 1.648084e-003, 3.819976e-002, 5.317208e-002, 4.245139e-002, -2.289226e-002, -4.698321e-002, 4.191203e-002, 2.204649e-002, 1.918145e-002, 1.373869e-002, 6.907445e-003, 3.723514e-002, -8.718278e-003, -1.184966e-002, 4.896760e-002, 7.434978e-002, 5.989752e-002, 2.719827e-002, 5.618880e-003, -1.371181e-002, -3.238111e-002, -1.366983e-002, 4.285959e-002, -3.756253e-002, -1.029534e-002, 3.245915e-002, 2.939973e-002, 1.215679e-002, -2.192350e-003, 8.464672e-003, 1.991404e-002, 1.310442e-002, -1.042168e-002, -4.493619e-002, -1.974968e-002, 8.600749e-003, -8.767705e-003, 3.607653e-003, 1.204237e-003, -6.409705e-003, -1.353741e-002, 2.626112e-003, -4.509511e-002, -1.686608e-002, 1.904390e-002, 3.327805e-002, 2.617798e-002, 2.024912e-002, 1.370205e-002, 1.218132e-004, 2.271983e-002, 5.164324e-002, -1.781168e-002, -7.605058e-003, 2.015944e-002, 3.476717e-002, 2.666839e-002, 1.101277e-002, 1.480123e-002, 1.501236e-002, -6.602276e-004, -8.922527e-003, -5.578098e-003, 3.483048e-003, -1.881343e-002, -1.283383e-002, -1.225310e-002, -3.308051e-003, -7.721534e-003, -3.648032e-002, 3.481403e-003, -9.034226e-003, -3.400020e-002, -1.483031e-002, 5.413683e-003, 1.832771e-002, 2.018680e-002, 1.548827e-002, 1.704484e-003, 8.396027e-003, 3.321058e-002, -2.718315e-003, -1.130101e-002, 6.945851e-003, 1.221150e-003, 2.214867e-003, -3.125322e-003, 9.051107e-003, 1.288595e-002, 1.649293e-002, 3.360987e-002, 3.149392e-002, 3.677403e-003, -9.432108e-004, 1.317667e-002, 1.546772e-003, 7.190910e-003, 8.406915e-003, -2.849514e-002, -1.573309e-002, 3.858860e-002, -2.681738e-003, -1.757853e-002, -1.472927e-002, -9.143353e-003, -7.132878e-003, -1.678750e-002, -3.623547e-002, -2.865786e-002, 2.495065e-002, 1.092710e-002, -1.385757e-002, 1.731203e-003, -1.096860e-002, -3.024182e-002, -2.502125e-002, -5.003711e-003, 1.084970e-002, 3.189102e-002, 4.438517e-002, 3.466078e-002, 3.019221e-002, 6.476598e-002, 6.098329e-002, 3.365547e-002, 3.950710e-002, 3.862415e-002, 9.669768e-003, -4.749870e-003, 3.292047e-002, 5.025982e-002, 1.515282e-002, -1.287366e-002, -2.995910e-002, -3.972444e-002, -5.612880e-002, -6.434839e-002, -2.974732e-002, 1.910058e-002, 1.184056e-002},
{1.384144e-001, 3.290842e-002, -4.618069e-003, 7.163286e-003, 9.469521e-003, -1.718155e-002, -2.478475e-002, -4.487523e-003, 1.735847e-002, 1.215890e-002, -9.788122e-003, -3.320872e-002, -4.787365e-002, -5.239842e-002, -5.166218e-002, -3.580963e-002, -1.440963e-002, 1.332958e-002, 3.209242e-002, 4.486111e-002, 3.496438e-002, -7.737194e-003, -3.481741e-002, -2.616893e-002, 4.105032e-003, -3.010639e-003, -7.438792e-002, -4.633039e-003, 1.808573e-001, 3.578621e-002, -1.474710e-002, 2.577210e-002, 3.701912e-002, 1.965517e-003, -2.712757e-002, -2.269294e-002, 9.536752e-003, 2.471359e-002, 9.581758e-003, -1.996122e-002, -3.757756e-002, -4.367397e-002, -3.257337e-002, -1.975260e-002, -1.285481e-002, -4.584891e-004, 1.330103e-002, 2.155521e-002, 3.184295e-002, 3.843986e-002, 2.112340e-002, -1.341366e-002, -2.600502e-002, -3.153475e-004, 5.565779e-002, 3.385768e-002, -4.394990e-002, 4.712573e-002, -2.893788e-002, -8.968516e-004, 5.466995e-002, 3.495508e-002, -1.924589e-002, -4.305117e-002, -2.306064e-002, 2.999034e-003, 5.302190e-003, -1.036713e-002, -2.651612e-002, -3.182178e-002, -1.129609e-002, 1.734087e-002, 3.826670e-002, 3.616076e-002, 2.111387e-002, 1.175188e-002, 1.963957e-003, -6.124941e-003, -8.164722e-004, 1.304473e-003, -9.948660e-003, -1.757434e-002, -1.119065e-002, 2.759095e-002, 7.477831e-002, 2.375622e-002, -1.423733e-002, -2.866465e-002, 2.741669e-002, 5.027791e-002, 1.186212e-002, -2.613407e-002, -3.505473e-002, -3.111479e-002, -2.303435e-002, -2.238550e-002, -2.359708e-002, -2.835222e-002, -2.123996e-002, 6.219378e-003, 3.273068e-002, 5.034509e-002, 3.754539e-002, 2.354265e-002, 1.295540e-002, -1.413701e-003, -1.373548e-002, -1.757877e-002, -1.609183e-002, -7.647722e-003, -7.069639e-003, -2.219992e-004, 1.458678e-002, 3.960051e-002, 3.724443e-002, 9.048632e-004, -1.068479e-002, 3.275232e-002, 3.623896e-002, 2.307988e-002, 8.917350e-003, -1.420644e-002, -3.368254e-002, -3.801667e-002, -2.589203e-002, -2.873690e-002, -3.024745e-002, -1.598765e-002, 6.786342e-003, 2.259107e-002, 2.560249e-002, 4.387561e-003, 3.394501e-003, 9.902427e-003, 9.980351e-003, 8.109773e-003, 4.235427e-003, 3.132836e-004, 7.227481e-003, 1.389675e-002, 2.099527e-002, 2.632087e-002, 2.651890e-002, 8.623374e-003, -

© ISO/IEC 2004 — All rights reserved


Copyright International Organization for Standardization
Provided by IHS under license with ISO
No reproduction or networking permitted without license from IHS
Not for Resale

3.650793e-003, -2.402378e-002, 1.687169e-002, 3.150982e-002, 4.483420e-002, 2.966961e-002, 5.737692e-003, -1.581910e-002, -3.239366e-002, -1.473232e-002, -1.559385e-002, -3.314297e-002, -3.301887e-002, -1.580078e-002, -3.096134e-003, -3.097182e-003, -2.624981e-002, -2.239770e-002, -4.553491e-003, 3.553916e-003, 1.274076e-002, 1.664060e-002, 8.356884e-003, 1.173781e-002, 1.973205e-002, 3.271936e-002, 3.335254e-002, 2.905464e-002, -1.263903e-003, -3.161026e-002, -4.028898e-002, 2.662858e-003, 3.249169e-002, 5.331970e-002, 3.886946e-002, 1.689052e-002, -1.346892e-002, -2.430060e-002, -3.571483e-003, -3.885747e-003, -3.317670e-002, -4.661437e-002, -3.559091e-002, -2.588791e-002, -2.445532e-002, -3.775372e-002, -4.213877e-002, -1.868881e-002, -5.347666e-003, 2.023164e-003, 3.123653e-003, 4.180281e-003, 2.125758e-003, 7.296686e-003, 2.373508e-002, 2.266373e-002, 2.436518e-002, -2.065935e-004, -4.559443e-002, -4.441464e-002, -1.217565e-003, 3.465033e-002, 5.483356e-002, 4.800015e-002, 2.912314e-002, -1.326781e-003, -1.797662e-003, 2.541592e-002, 1.748402e-002, -2.011185e-002, -3.781837e-002, -2.828614e-002, -2.129445e-002, -1.836139e-002, -2.452750e-002, -3.163908e-002, -1.713463e-002, 3.777786e-003, 7.677466e-003, 9.149928e-003, 1.038877e-002, 4.628708e-003, 2.447970e-003, 1.376306e-002, 1.281667e-002, 1.499090e-002, 3.910051e-003, -3.870779e-002, -3.427390e-002, -4.764562e-004, 2.328181e-002, 4.276516e-002, 4.404183e-002, 3.117699e-002, 1.315734e-002, 2.251527e-002, 5.633298e-002, 4.399231e-002, 8.560532e-004, -1.962581e-002, -1.298409e-002, -5.485141e-003, 1.146254e-003, 3.505159e-003, -8.405656e-003, -1.072368e-002, 1.493586e-003, 9.339300e-003, 2.174140e-002, 2.874928e-002, 1.877926e-002, 3.258606e-003, 5.060557e-003, 9.856244e-003, 5.140104e-003, -2.840582e-003, -2.607239e-002, -1.884267e-002, -1.042460e-002, 4.899824e-003, 3.373948e-002, 4.569036e-002, 3.193259e-002, 1.738944e-002, 3.716033e-002, 6.885596e-002, 6.063374e-002, 2.926191e-002, -2.611660e-003, -3.274267e-003, 8.576552e-003, 1.924978e-002, 2.463286e-002, 1.786736e-002, -3.078891e-003, -6.375047e-003, -1.902527e-003, 1.136028e-002, 2.295129e-002, 2.021695e-002, 7.655038e-003, 2.756386e-004, 1.232527e-002, -1.742480e-003, -1.017717e-002, -2.875978e-002, -1.269057e-002, -2.999424e-002, -1.736480e-002, 1.747027e-002, 3.807911e-002, 3.031971e-002, 2.290875e-002, 3.178340e-002, 5.953160e-002, 6.764002e-002, 5.716040e-002, 1.386647e-002, -3.738065e-003, 6.481879e-003, 1.369485e-002, 2.397025e-002, 4.032040e-002, 1.532501e-002, -8.103952e-003, -1.362202e-002, -1.411278e-002, 6.397701e-004, 2.156493e-003, -5.873947e-003, -1.645449e-002, -8.549910e-003, -9.164545e-003, -1.467446e-002, -2.586466e-002, -1.034768e-002, -5.676411e-002, -5.253120e-002, -9.587959e-003, 1.567648e-002, 8.295560e-003, -4.010412e-003, -9.775532e-003, 2.129292e-002, 4.801883e-002, 5.339878e-002, 1.800796e-002, -2.087132e-002, -2.183090e-002, -2.185740e-002, -6.717349e-003, 2.526748e-002, 2.000159e-002, -1.625507e-002, -3.312183e-002, -3.305329e-002, -1.267545e-002, -1.125856e-002, -2.545639e-002, -4.646791e-002, -4.558879e-002, -2.144864e-002, -2.311575e-002, -2.798731e-002, -1.635362e-002, -7.607076e-002, -6.273780e-002, -4.666041e-003, 1.140429e-002, -2.483770e-003, -2.309734e-002, -3.267244e-002, -5.530789e-003, 3.324929e-002, 5.116480e-002, 2.407675e-002, -2.895914e-002, -5.111747e-002, -6.055178e-002, -4.903238e-002, -5.814408e-003, 2.297218e-002, -5.111543e-003, -3.956703e-002, -3.199761e-002, 1.647222e-003, 1.692402e-002, 1.118192e-003, -3.959917e-002, -6.324587e-002, -3.610587e-002, -3.076572e-002, -3.152217e-002, -9.785325e-003, -6.241014e-002, -2.993132e-002, 3.408977e-002, 4.170781e-002, 1.050327e-002, -2.533982e-002, -4.802261e-002, -2.792486e-002, 2.847427e-002, 6.876859e-002, 5.744027e-002, -8.764167e-003, -6.644716e-002, -9.099153e-002, -8.088698e-002, -2.963751e-002, 2.153899e-002, 2.365482e-002, -1.691149e-002, -2.300905e-002, 1.782254e-002, 5.118964e-002, 5.424479e-002, 1.226329e-002, -3.668389e-002, -3.120984e-002, -1.431880e-002, -2.657823e-002, 8.164113e-003, -2.601971e-002, -2.292566e-003, 3.397771e-002, 3.207436e-002, 5.846018e-003, -3.294879e-002, -6.026330e-002, -5.665467e-002, -2.927496e-003, 6.699440e-002, 8.613800e-002, 2.949534e-002, -4.509210e-002, -8.592609e-002, -7.176647e-002, -2.246844e-002, 1.652717e-002, 1.937546e-002, -1.164397e-002, -1.842353e-002, 7.786793e-004, 3.536918e-002, 5.549031e-002, 2.431526e-002, -2.874520e-002, -2.179371e-002, 1.181549e-002, -7.466241e-003, 1.886645e-002, -2.405443e-002, -2.606238e-002, -5.639335e-003, 1.820745e-002, 3.679324e-002, 2.049788e-002, -2.912665e-002, -7.000980e-002, -6.936640e-002, 1.901666e-003, 7.182348e-002, 6.265189e-002, 1.039050e-002, -2.674725e-002, -1.809133e-002, 1.396262e-002, 2.144402e-003, -3.209345e-002, -3.859565e-002, -2.141503e-003, 3.706582e-002, 5.572061e-002, 5.308521e-002, 1.647200e-002, -5.393374e-002, -7.319278e-002, -6.529058e-004, 9.105608e-003, -2.960216e-003, -9.373488e-003, 2.861447e-002, 4.858108e-002, 4.483799e-002, 4.104930e-002, 2.850736e-002, -2.531403e-003, -4.584279e-002, -8.037677e-002, -5.646860e-002, 1.688126e-002, 5.078406e-002, 3.268543e-002, 1.426331e-002, 2.088390e-002, 3.083768e-002, -1.822333e-002, -7.694619e-002, -6.769769e-002, -2.154403e-002, 1.167015e-002, 2.832629e-002, 5.046330e-002, 6.501575e-002, 4.096565e-002, -2.371633e-002, -1.014574e-002, -4.201308e-003, 5.319840e-003, 5.613663e-002, 6.660821e-002, 4.676448e-002, 2.535404e-003, -2.189645e-002, -1.156815e-002, 3.425675e-002, 7.505364e-002, 6.888680e-002, 5.181881e-002, 5.446471e-002, 3.130678e-002, -6.244468e-003, -8.608685e-004, 3.367523e-002, 6.372612e-002, 3.333652e-002, 4.071571e-002, 7.698808e-002, 4.822342e-002, -7.608372e-003, -4.144675e-002, -4.844268e-002, -5.922745e-003, 6.151732e-002, 7.876074e-002, 5.252125e-002, 2.468385e-003, -1.394346e-002, 2.200542e-002, 4.823701e-003, -4.404696e-002, -6.679947e-002, -7.084366e-002, -


© ISO/IEC 2004 — All rights reserved

Copyright International Organization for Standardization
Provided by IHS under license with ISO
No reproduction or networking permitted without license from IHS
Not for Resale

4.421494e-002, 1.151236e-002, 5.778400e-002, 9.674295e-002, 1.125601e-001, 7.784183e-002, 1.520207e-002, -7.863929e-002, -7.277727e-002, -3.066237e-003, 5.940513e-002, 6.339367e-002, 1.024691e-001, 9.242292e-002, 1.358697e-002, -6.707715e-002, -9.133882e-002, -8.566511e-002, -6.951629e-002, -2.373259e-002, 4.583818e-002, 6.193139e-002, 1.531550e-002, -3.247765e-002, -1.142573e-002, -5.549414e-002, -6.947254e-002, -7.655113e-003, 1.501072e-002, 2.819009e-002, 3.257186e-002, -6.702436e-003, -2.201552e-002, -1.288358e-002, 2.576405e-002, 2.653380e-002, -2.693019e-002, -2.261496e-002, -7.613410e-003, 1.612297e-002, 1.246338e-002, 3.501190e-003, 4.963538e-003, 4.562864e-003, -3.466257e-002, -3.410360e-002, 2.599075e-002, 1.145471e-002, -6.584643e-002, -4.240423e-002, 3.466125e-003, -2.033675e-002, 2.196619e-002, 2.220179e-002, -1.836339e-002, -1.332796e-002, 1.311442e-002, -9.867752e-003, -3.863196e-002, -4.906904e-002, -6.659600e-002, -9.985774e-002, -8.717442e-002, -4.080583e-002, 3.067918e-002, 2.677087e-002, 3.146220e-002, -1.074012e-002, -4.020292e-002, -3.996581e-002, -8.166902e-002, -7.428226e-002, 2.834297e-002, -1.626156e-002, -7.434867e-002, -2.871141e-002, 6.368571e-002, -5.228656e-002, -1.033606e-001, -3.602716e-002, -1.005285e-002, 4.219953e-002, 4.868409e-002, 5.228173e-002, 2.424729e-002, -2.713126e-002, -6.456992e-002, -8.057041e-002, -6.137462e-002, -3.392492e-002, -3.456201e-003, -2.132522e-003, -2.868470e-002, 2.786556e-003, 6.579061e-003, 2.499910e-002, -1.006570e-002, -5.619728e-002, -8.312503e-003, 6.742282e-003, 8.821767e-003, -1.696697e-002, -4.193651e-002, -9.046989e-002, -7.089102e-002, 1.568657e-003, 9.320254e-003, -3.533538e-002, -1.464863e-003, 3.712653e-002, 2.019417e-002, 1.912460e-002, 2.297127e-002, 4.394233e-003, -1.798601e-002, -1.653119e-002, 1.565595e-002, 5.119178e-002, 8.427608e-002, 8.754697e-002, 4.365387e-002, -2.492040e-002, -3.582073e-002, -3.552627e-002, -4.448712e-003, -1.556135e-002, -4.609335e-002, 1.202262e-002, 6.514757e-002, 8.958375e-002, 7.781309e-002, 4.058236e-002, -2.763743e-003, -7.346603e-003, 2.763376e-002, 3.282627e-002, 3.625121e-003, 1.463797e-002, 2.883682e-002, 4.491626e-003, 2.653532e-003, -1.490107e-003, -2.955348e-002, -3.274684e-002, -5.213107e-003, 3.595800e-002, 6.566556e-002, 8.127199e-002, 6.755065e-002, 5.209851e-003, -4.529001e-002, -6.277459e-002, -3.454384e-002, -9.707520e-003, -1.610719e-002, -2.603581e-002, 2.415806e-003, 6.042587e-002, 7.904004e-002, 7.883498e-002, 5.610222e-002, 2.665747e-002, 1.739088e-002, 2.049633e-002, 2.025192e-002, 1.148990e-002, 2.328234e-002, 1.327645e-002, -8.418246e-003, -2.090283e-003, -1.207478e-002, -4.500353e-002, -5.756449e-002, -4.292963e-002, -1.027450e-002, 2.215992e-002, 3.264979e-002, 1.534648e-002, -3.363450e-002, -5.865257e-002, -3.750469e-002, 7.017576e-003, 6.012426e-003, -8.437239e-003, -1.075642e-002, -2.811643e-003, 2.488149e-002, 3.705640e-002, 2.301426e-002, 3.420030e-003, -1.544651e-002, -1.932895e-002, -1.423001e-002, -1.321365e-003, 8.982986e-003, 1.997857e-002, -6.576754e-003, -2.996882e-002, -1.713956e-002, -5.308890e-003, -2.851952e-002, -4.671809e-002, -4.545496e-002, -2.696795e-002, -5.254857e-003, 6.980766e-003, -1.531000e-002, -5.596040e-002, -3.972417e-002, 1.591107e-002, 4.413370e-002, 3.476545e-002, 1.645535e-002, 1.352917e-003, 8.004928e-003, 1.705459e-002, 5.843096e-003, -1.230283e-002, -3.114961e-002, -4.723694e-002, -4.066227e-002, -2.515770e-002, 9.692366e-005, 1.601018e-002, 1.269043e-003, -2.183835e-002, -3.807360e-002, -3.104272e-002, -8.209339e-003, -1.958445e-003, -3.497503e-003, -7.282517e-003, 1.019116e-003, 5.512326e-003, -2.001932e-003, -4.115834e-002, -5.005588e-002, 4.641323e-003, 5.115586e-002, 4.867963e-002, 4.739066e-002, 4.589291e-002, 1.558404e-002, 1.716624e-003, 1.777116e-002, 1.983104e-002, -3.706095e-003, -2.355247e-002, -3.353503e-002, -3.001694e-002, -9.083556e-003, 5.960097e-003, 5.857061e-003, -1.849503e-002, -2.953980e-002},
{-4.818739e-002, -1.781615e-002, -5.226381e-003, -2.766272e-002, -5.063081e-002, -5.632387e-002, -3.399148e-002, -8.124420e-003, 6.658684e-003, 5.317043e-003, -5.925560e-003, -1.084961e-002, -1.243634e-002, 4.384622e-003, 2.159888e-002, 3.410525e-002, 3.145657e-002, 1.957750e-002, 1.551518e-002, 8.318544e-003, 1.490923e-002, 1.664603e-002, 2.753179e-003, 1.473155e-004, 1.397937e-002, 1.885771e-002, -1.280428e-002, -4.335674e-002, 5.042973e-003, 1.182556e-004, 1.184052e-002, 2.384975e-003, -5.407920e-003, -7.305049e-003, -6.978801e-005, 1.060974e-002, 1.177326e-002, 1.345435e-002, -2.673263e-003, -2.837907e-002, -3.049405e-002, -1.969912e-002, 1.654159e-002, 5.345849e-002, 6.428239e-002, 5.606684e-002, 3.795516e-002, 9.159161e-003, -1.832897e-002, -1.208297e-002, 5.225958e-003, 1.545067e-002, 8.292658e-003, 4.335289e-003, 1.554631e-002, 2.406619e-002, -9.646096e-003, -2.484089e-002, 1.053560e-003, -5.891694e-003, 6.153042e-003, 9.276944e-003, 2.766351e-003, -4.470091e-003, -5.751809e-003, -3.203811e-004, -7.377488e-003, -3.678377e-002, -6.682084e-002, -6.651181e-002, -3.867840e-002, 7.652403e-003, 6.171045e-002, 7.836270e-002, 6.729329e-002, 4.284884e-002, -1.124484e-003, -4.525462e-002, -6.020267e-002, -4.856001e-002, -2.076603e-002, 1.192252e-003, -1.574606e-003, -3.717011e-003, 5.038640e-003, 1.403811e-002, -6.118829e-003, -9.779121e-003, 1.048973e-002, 3.145588e-002, 1.253209e-002, -4.036138e-003, -8.842864e-003, -4.506767e-003, 2.682356e-003, -1.152433e-002, -3.759497e-002, -5.893424e-002, -5.730581e-002, -2.558134e-002, 1.174518e-002, 5.796623e-002, 7.099742e-002, 6.198328e-002, 4.207619e-002, 9.990131e-003, -3.029719e-002, -5.471076e-002, -5.694812e-002, -3.454644e-002, -8.765025e-003, -3.113357e-003, 9.805357e-005, -1.212873e-002, -1.157958e-002, 6.673119e-003, -2.745855e-003, 3.651296e-002, 3.404082e-002, 1.045941e-002, 4.977609e-003, 1.539826e-002, 2.756967e-002, 2.680852e-002, 5.931377e-003, -1.832071e-002, -2.422637e-002, -1.592234e-002,

© ISO/IEC 2004 — All rights reserved


Copyright International Organization for Standardization
Provided by IHS under license with ISO
No reproduction or networking permitted without license from IHS
Not for Resale

3.631197e-003, 2.335299e-002, 4.230363e-002, 4.631586e-002, 4.371988e-002, 4.026846e-002, 1.811679e-002, -3.128419e-003, -1.950555e-002, -2.234300e-002, -2.988496e-003, 1.745247e-002, 1.346170e-002, 7.094519e-003, -8.431287e-004, -2.386105e-002, -1.713178e-002, 7.055229e-003, 4.437864e-002, 2.831040e-002, 1.883120e-002, 3.241718e-002, 3.948841e-002, 3.311039e-002, 6.862108e-003, -1.854936e-002, -1.532920e-002, -7.363951e-003, 9.943881e-003, 2.651424e-002, 3.019981e-002, 2.232333e-002, 1.251306e-002, 1.359616e-002, 1.996243e-002, 1.191596e-002, -1.742639e-003, -8.506670e-003, 6.171474e-004, 2.126379e-002, 4.719925e-002, 4.750008e-002, 1.273836e-002, 5.921825e-003, -8.511864e-003, -3.166055e-002, -6.736848e-003, 2.046180e-002, 2.105867e-002, 2.455134e-002, 3.948150e-002, 2.694840e-002, 2.504162e-003, -3.741017e-002, -5.553239e-002, -3.672774e-002, -1.746524e-002, -1.465554e-003, 9.930699e-003, 2.730593e-003, -1.491309e-002, -2.529280e-002, -1.711307e-002, 3.971079e-003, 4.353273e-003, -6.065188e-003, -2.005998e-002, -1.391062e-002, -1.455682e-003, 3.164154e-002, 4.397497e-002, 1.044919e-002, -1.744149e-002, -1.007513e-002, -1.958543e-002, -5.045711e-002, -7.049001e-003, 1.303996e-002, 2.653161e-002, 4.172123e-002, 2.339012e-002, -8.820285e-003, -4.348882e-002, -5.554591e-002, -4.023998e-002, -3.141749e-002, -2.369765e-002, -1.891015e-002, -2.807002e-002, -4.484001e-002, -5.425376e-002, -3.919563e-002, -7.286319e-003, 5.811368e-003, -4.324555e-003, -2.526314e-002, -3.803297e-002, -3.676380e-002, -1.856784e-002, 3.661583e-003, -1.892948e-002, -5.641129e-002, -3.138089e-002, -1.069852e-002, -7.184112e-002, -1.002004e-002, 1.097446e-002, 1.937383e-002, 3.357722e-002, 3.343143e-002, 3.231613e-002, 2.068574e-002, 1.382569e-002, 8.904248e-003, -2.503124e-003, -8.612895e-003, -1.309252e-002, -2.803178e-002, -4.827611e-002, -5.739619e-002, -4.088029e-002, -1.094300e-002, 9.255258e-003, 7.789981e-003, -5.770562e-003, -3.110106e-002, -4.909375e-002, -5.607660e-002, -4.445473e-002, -5.235066e-002, -7.649667e-002, -5.320663e-002, -2.267595e-003, -6.232801e-002, 1.856997e-003, 4.882625e-003, 6.255027e-003, 2.777523e-002, 5.477546e-002, 7.753402e-002, 8.168547e-002, 6.599931e-002, 5.023413e-002, 3.448355e-002, 2.534503e-002, 1.930222e-002, 7.596381e-003, -9.413889e-003, -1.486965e-002, -6.860100e-003, 3.839774e-003, 1.165308e-002, 1.761879e-002, 1.892415e-002, -2.463802e-003, -2.951406e-002, -4.068268e-002, -4.125932e-002, -4.532504e-002, -5.938942e-002, -4.621260e-002, 1.330522e-002, -3.612321e-002, -9.387620e-003, -1.645058e-002, -7.094967e-003, 2.723572e-002, 6.727604e-002, 7.941172e-002, 7.100080e-002, 4.559292e-002, 2.692205e-002, 2.016011e-002, 1.382466e-002, 1.263752e-002, 1.756976e-002, 2.132949e-002, 2.465065e-002, 2.670663e-002, 2.464709e-002, 2.483526e-002, 2.004926e-002, 1.986228e-002, 1.985840e-002, 9.125552e-003, 3.479782e-003, 2.927476e-003, 2.877918e-004, -1.831079e-002, -1.456868e-002, 3.172077e-002, -2.299205e-002, -3.264031e-002, -5.180287e-002, -3.800000e-002, 7.803681e-004, 1.606213e-002, 1.005577e-002, -7.063648e-003, -2.868368e-002, -3.705463e-002, -3.396960e-002, -2.588667e-002, -1.104217e-002, 7.039609e-003, 2.173858e-002, 2.472122e-002, 2.107140e-002, 1.126061e-002, 1.408184e-003, -7.214968e-003, 3.246175e-004, 2.365798e-002, 4.012401e-002, 4.336879e-002, 4.545232e-002, 3.676852e-002, 2.274296e-002, 1.514043e-002, 4.888471e-002, -1.717635e-002, -4.979998e-002, -7.306495e-002, -5.650266e-002, -3.351678e-002, -3.225007e-002, -4.525978e-002, -5.726238e-002, -6.634563e-002, -6.457229e-002, -5.722134e-002, -4.218234e-002, -1.886659e-002, 8.963003e-004, 1.758312e-002, 2.200864e-002, 1.304035e-002, -9.991263e-003, -2.930478e-002, -3.952226e-002, -2.425557e-002, 1.040714e-002, 4.467127e-002, 6.325182e-002, 6.499864e-002, 4.776755e-002, 3.682110e-002, 2.342733e-002, 3.524291e-002, -7.835622e-003, -5.008610e-002, -5.242380e-002, -2.556614e-002, -1.754746e-002, -2.455734e-002, -2.587662e-002, -2.511136e-002, -2.198933e-002, -2.659457e-002, -2.815761e-002, -2.237171e-002, -1.503191e-002, -4.380232e-003, 8.028658e-003, 1.666128e-002, 1.467864e-002, -3.225561e-003, -2.896200e-002, -3.733973e-002, -2.276297e-002, 1.420715e-002, 5.646462e-002, 8.588085e-002, 8.763398e-002, 4.531586e-002, 1.989661e-002, 6.212219e-003, 6.698129e-004, 1.390028e-002, -3.404533e-003, 1.376915e-002, 5.160319e-005, -2.816635e-002, -3.322917e-002, -2.389051e-002, -1.366462e-002, 5.433143e-003, 1.831683e-002, 2.005495e-002, 2.186680e-003, -1.048256e-002, -1.085919e-002, 1.188125e-003, 2.008469e-002, 3.435808e-002, 1.771732e-002, -2.571428e-002, -5.651333e-002, -6.069441e-002, -3.138930e-002, 1.226602e-002, 4.758540e-002, 6.039423e-002, 3.883939e-002, 9.443399e-003, -1.337471e-002, -3.548424e-002, 3.630544e-002, 2.509068e-002, 1.763262e-002, -2.134994e-002, -5.607818e-002, -5.726079e-002, -4.618832e-002, -3.031355e-002, -8.212706e-003, 1.517026e-002, 2.565583e-002, -5.624715e-003, -2.868048e-002, -3.168592e-002, -1.696763e-002, 1.163647e-002, 3.225672e-002, 2.900655e-002, 4.970997e-005, -1.456943e-002, -2.181474e-002, -8.411114e-003, -3.601925e-003, -1.191745e-002, -1.984016e-002, -2.299004e-002, -3.675490e-003, -6.428403e-003, -4.887537e-002, 3.104631e-002, 1.023547e-002, 1.256878e-002, -6.843363e-003, -1.600493e-002, -6.759834e-004, 6.276361e-003, -2.511051e-003, -6.818585e-003, -9.325930e-003, 3.084147e-003, -1.241379e-003, -2.154231e-002, -3.191595e-002, -2.629865e-002, 9.534743e-003, 5.943589e-002, 6.643868e-002, 2.265446e-002, -1.784900e-002, -2.238535e-002, -4.712936e-003, -3.620410e-003, -1.417787e-002, -2.970871e-002, -4.286896e-002, -1.420657e-002, 1.815451e-002, -1.168807e-002, 2.596069e-002, 1.314974e-002, 4.610088e-002, 2.774242e-002, -2.010609e-003, -1.636995e-003, 1.535684e-002, 1.588023e-002, 9.880850e-003, -2.677697e-003, 9.499383e-003, 3.882101e-002, 1.389315e-002, -2.007042e-002, -3.181857e-002, 9.198966e-004, 5.702617e-002, 5.007338e-002, 8.116987e-003,


© ISO/IEC 2004 — All rights reserved

Copyright International Organization for Standardization
Provided by IHS under license with ISO
No reproduction or networking permitted without license from IHS
Not for Resale

1.796249e-002, 3.849962e-002, 5.214827e-002, 4.598404e-002, 3.010683e-002, 4.755670e-003, 3.241978e-003, 7.319636e-004, 2.880727e-002, 3.956833e-002, 2.467622e-002, 1.348158e-002, 5.848712e-002, 1.949130e-002, -3.561552e-002, -4.532742e-002, 2.761455e-003, 3.633450e-002, 2.075529e-002, -4.722551e-003, 2.551630e-002, 8.254180e-002, 5.830264e-002, 7.275270e-003, -2.871711e-002, -3.761836e-003, 5.092540e-002, 4.124396e-002, 1.265198e-002, 3.162620e-002, 3.892495e-002, 4.280479e-002, 7.853572e-003, -4.332100e-002, -6.620530e-002, -1.922011e-002, 1.962320e-002, 2.679046e-002, 5.994108e-002, 6.972318e-002, 3.625931e-002, 6.232709e-002, 4.252166e-002, 4.379134e-003, -2.418488e-002, -9.960437e-003, 8.347628e-003, 8.578705e-003, -8.975677e-003, -9.285523e-003, 4.856860e-002, 4.819053e-002, 4.112006e-002, 2.459096e-002, 3.591643e-002, 4.144551e-002, -7.634115e-003, -4.533970e-002, -6.723193e-002, -3.184300e-002, 4.052169e-002, 5.525991e-002, 3.327495e-002, -3.319653e-002, -4.718701e-002, 1.603758e-002, 4.492918e-002, 8.872526e-002, 3.761811e-002, -4.286201e-003, 3.621835e-002, 1.778458e-002, -2.268290e-002, 2.418716e-002, 4.727611e-002, 1.153985e-002, -6.530049e-002, -6.904112e-002, -8.041072e-002, -5.584700e-002, -8.186353e-003, 3.113465e-002, 3.030013e-002, 3.525065e-002, -1.254524e-002, -9.718491e-002, -1.430845e-001, -1.637365e-001, -6.081539e-002, 7.532421e-002, 9.333826e-002, 5.781605e-002, 1.574276e-002, -3.086695e-003, 9.936930e-004, 2.163973e-002, 8.797310e-002, 4.483502e-002, -1.395359e-002, 1.848066e-002, 6.777035e-003, -1.135014e-002, 1.397956e-002, 4.053212e-002, -1.261505e-002, -6.676566e-002, -9.273164e-002, -1.115127e-001, -1.159292e-001, -4.706086e-002, -1.343426e-003, 7.818386e-004, 1.149704e-003, -2.247319e-002, -8.703764e-002, -1.063857e-001, -8.734857e-002, -4.481902e-002, 4.392245e-002, 3.460474e-002, -3.644803e-002, -2.425816e-002, 2.803061e-002, 2.184919e-002, -5.056336e-003, 3.979616e-002, 5.895464e-002, 1.297878e-002, 1.316000e-002, -5.932204e-003, -1.798047e-002, 3.509502e-003, 7.964188e-003, -5.794632e-003, -1.856181e-002, -4.919814e-002, -1.005736e-001, -1.200794e-001, -3.502315e-002, -2.709061e-002, -2.252300e-002, -2.307099e-002, -2.124958e-002, -4.752899e-002, -3.625373e-002, -2.078112e-002, -1.118580e-002, 2.577176e-003, -1.991939e-002, -5.266011e-002, -4.337025e-002, 2.116372e-002, 3.094728e-002, -1.568536e-002, 5.464500e-003, 4.266773e-002, 3.513108e-002, 1.194579e-003, -1.961399e-002, -1.155818e-002, 1.784721e-002, 2.863450e-002, 3.071975e-002, 3.467131e-002, 1.542427e-002, -4.907930e-002, -3.782085e-002, -1.525721e-002, -1.189884e-002, -1.160357e-003, -7.189200e-003, -4.851388e-003, -2.291048e-002, -6.228102e-003, 3.549971e-002, 3.652310e-002, 2.909026e-002, 7.571423e-003, -1.824401e-002, -2.365396e-002, 2.678344e-002, 3.472347e-002, -1.254053e-002, -1.550324e-002, 4.623226e-003, 2.235046e-002, -2.282614e-002, -5.183226e-002, -2.563323e-002, 2.539802e-002, 5.144007e-002, 6.606032e-002, 7.120856e-002, 4.865077e-002, 2.262637e-002, 3.836310e-002, 1.030647e-002, 2.589074e-002, 4.477670e-002, 3.145383e-002, 2.425912e-002, 6.707534e-003, -1.642850e-002, 1.987169e-002, 4.050143e-002, 3.468055e-002, 1.418418e-002, -7.511395e-003, -1.756368e-002, 1.067977e-002, 1.815737e-002, -1.304331e-002, -2.504984e-002, -2.705112e-002, -2.296519e-002, -5.181139e-002, -8.105388e-002, -4.566412e-002, 2.249550e-003, 3.229266e-002, 5.184280e-002, 7.569560e-002, 8.360431e-002, 8.006588e-002, 4.482975e-002, 5.951087e-003, 1.675382e-002, 3.766676e-002, 3.040228e-002, 2.386104e-002, 3.393923e-002, 1.971820e-002, 4.762818e-003, 2.378730e-003, -5.535473e-003, -2.261989e-002, -4.050654e-002, -4.730934e-002, -1.946587e-002, -1.004869e-002, -3.087400e-002, -2.750753e-002, -2.944836e-002, -4.639433e-002, -7.088008e-002, -7.859278e-002, -4.469858e-002, -9.736346e-004, 3.662249e-002, 8.302712e-002, 1.199397e-001, 1.142499e-001, 6.292666e-002, -1.781513e-002, -5.281270e-002, -5.176119e-002, -3.386520e-002, -2.681372e-002, -2.463076e-002, 4.692709e-003, 3.314059e-002, 5.103699e-002, 2.856320e-002, 1.131472e-003, -1.906102e-002, -3.861120e-002, -4.637577e-002, -3.228103e-002, -2.833625e-002, -3.374603e-002, -3.796160e-002},
{-1.621473e-002, -5.662893e-003, 2.217343e-002, 3.490506e-002, 2.104665e-002, 2.208711e-002, 1.574929e-002, 7.087295e-003, -4.029666e-003, -9.637825e-003, -6.197596e-003, -6.000121e-003, -4.390817e-003, -8.118090e-003, 2.011837e-003, 5.684259e-003, -3.225573e-003, -2.213814e-002, -3.292243e-002, -4.131456e-002, -3.136465e-002, -6.800523e-003, 2.695540e-003, 1.563395e-002, 3.334385e-002, 3.760827e-002, 2.016564e-002, 2.588432e-002, 7.042932e-002, -4.089818e-002, -6.106426e-003, -7.849791e-003, -1.677330e-002, -1.901223e-002, -2.705291e-002, -3.012381e-002, -3.181853e-002, -3.105886e-002, -1.835054e-002, -6.973382e-003, -4.476604e-003, -3.260859e-003, -4.308694e-003, 1.062914e-002, 2.450103e-002, 1.787504e-002, -5.626233e-003, -2.862811e-002, -4.532903e-002, -3.625489e-002, -9.330300e-003, 3.247096e-003, -9.303754e-003, -2.204805e-002, 5.286583e-004, -5.369756e-003, -4.533109e-002, -2.297346e-002, -5.680446e-003, 5.929594e-005, -5.791937e-003, -4.804966e-003, -7.164002e-003, -7.797575e-003, -1.129542e-002, -9.974040e-003, -1.029330e-002, 3.634031e-003, 4.666390e-003, -1.628689e-003, -1.488940e-002, -1.545886e-002, 8.263541e-003, 2.187415e-002, 2.189991e-002, -3.570960e-003, -2.149544e-002, -3.021473e-002, -3.416828e-002, 1.890115e-004, 3.792794e-002, 3.234108e-002, -2.480827e-003, -8.894930e-003, 1.311909e-002, -1.257872e-002, -5.136951e-002, -8.383290e-003, -1.535939e-003, 5.829309e-003, 3.999653e-003, 7.503982e-003, 1.528888e-002, 1.837451e-002, 6.265963e-003, -1.162060e-002, -6.522015e-003, -5.831149e-004, -6.816224e-003, -2.181243e-002, -2.661080e-002, -3.639524e-003, 1.237307e-002, 8.001871e-003, -1.610651e-002, -2.597768e-002, -2.877616e-002, -3.018227e-002, -1.130624e-002, 2.820254e-002, 5.758308e-002, 3.640626e-002,

© ISO/IEC 2004 — All rights reserved


Copyright International Organization for Standardization
Provided by IHS under license with ISO
No reproduction or networking permitted without license from IHS
Not for Resale

4.908418e-003, 1.030887e-002, 2.622722e-002, -1.659510e-002, -1.804062e-002, 4.430309e-003, 1.004045e-002, -4.736148e-003, 1.395196e-002, 4.329198e-002, 3.433740e-002, -5.218105e-003, -2.645119e-002, -9.077182e-003, 1.008228e-002, 1.458846e-002, 9.618856e-003, 4.542540e-003, 1.855913e-002, 3.039246e-002, 2.044816e-002, 6.684143e-003, -6.576738e-003, -8.782189e-003, -1.070972e-002, -2.538612e-003, 2.530925e-002, 5.300712e-002, 5.279795e-002, 2.904886e-002, 1.105398e-002, 1.394522e-002, 1.796108e-002, -1.321751e-002, 8.128794e-003, 6.771028e-004, -6.287962e-004, 4.331294e-002, 4.454429e-002, -4.176122e-003, -3.603984e-002, -4.994706e-002, -1.598087e-002, 3.535094e-002, 7.061121e-002, 6.894986e-002, 5.398934e-002, 4.548745e-002, 4.034885e-002, 2.236251e-002, 1.377795e-002, 1.119327e-002, 1.248498e-002, 1.784499e-002, 2.737944e-002, 4.425618e-002, 5.177257e-002, 3.828597e-002, 3.446052e-002, 1.818399e-002, -4.007159e-003, -1.479919e-004, 4.883529e-003, 1.249724e-002, -8.886123e-003, 1.267729e-002, 4.124272e-002, 1.466003e-002, -3.782039e-002, -5.655852e-002, -6.750572e-002, -3.342163e-002, 3.686193e-002, 8.672847e-002, 8.890534e-002, 7.149527e-002, 4.063921e-002, 1.041937e-002, -9.252422e-003, -2.224355e-002, -1.146350e-002, -2.178559e-003, 6.233945e-003, 2.261862e-002, 3.745383e-002, 3.463296e-002, -2.014135e-003, 1.421996e-003, 4.361102e-003, -1.941683e-002, -4.303108e-002, 1.891199e-002, 6.623607e-003, -2.350418e-002, -2.897325e-004, 2.974688e-002, -3.455944e-003, -4.819118e-002, -6.586368e-002, -7.714066e-002, -4.544952e-002, 1.744614e-002, 5.888246e-002, 6.057611e-002, 5.302803e-002, 1.393015e-002, -3.569744e-002, -6.716468e-002, -7.283773e-002, -6.368868e-002, -5.600296e-002, -4.702223e-002, -2.724140e-002, -2.010258e-003, 1.100179e-002, -2.713391e-002, -4.088320e-002, -1.498603e-002, -1.675331e-002, -5.955417e-002, 3.431567e-002, -8.012766e-003, -3.158979e-002, -1.665905e-004, 2.624268e-002, -6.909514e-004, -2.262242e-002, -3.615962e-002, -5.315960e-002, -3.495307e-002, 6.331639e-003, 3.064392e-002, 4.135024e-002, 4.452370e-002, 9.953181e-003, -5.089623e-002, -9.290919e-002, -9.563475e-002, -8.387954e-002, -7.262685e-002, -7.446812e-002, -6.850873e-002, -4.250766e-002, -5.794070e-003, -1.083588e-002, -4.864112e-002, -2.749103e-002, 9.993778e-003, -3.451389e-002, 2.903816e-002, -2.406259e-002, -3.044299e-002, 4.702188e-003, 1.640716e-002, 5.521729e-003, 1.458445e-002, 3.764743e-003, -2.546461e-002, -3.330684e-002, -1.684345e-002, 1.597101e-002, 3.779257e-002, 4.352172e-002, 1.846030e-002, -2.736822e-002, -7.635432e-002, -7.801581e-002, -5.995496e-002, -3.433792e-002, -2.830777e-002, -3.317662e-002, -1.482167e-002, 2.515301e-002, 3.436211e-002, -1.150661e-002, -2.642324e-002, 2.218964e-002, 4.736321e-003, 2.266239e-002, -3.335913e-002, -2.935698e-002, 8.519109e-003, 1.995815e-002, 2.963086e-002, 4.595920e-002, 4.182154e-002, -4.400541e-003, -4.585530e-002, -5.436134e-002, -1.868813e-002, 1.387312e-002, 2.418522e-002, 1.225595e-002, -1.423278e-002, -5.390410e-002, -5.303658e-002, -2.174356e-002, 1.450680e-002, 3.723205e-002, 4.151578e-002, 4.431955e-002, 7.390636e-002, 9.709047e-002, 6.063846e-002, -6.670979e-003, 1.257877e-002, 2.374675e-002, 1.202093e-003, -2.833545e-002, -2.413246e-002, 1.062709e-003, 2.719065e-002, 5.040639e-002, 7.268306e-002, 7.138875e-002, 1.476378e-002, -3.943672e-002, -6.714787e-002, -4.517717e-002, 4.395137e-003, 1.482985e-002, 1.261084e-002, -1.330599e-002, -5.224629e-002, -5.972280e-002, -2.098955e-002, 2.456529e-002, 4.986358e-002, 5.623731e-002, 5.873186e-002, 8.068746e-002, 1.151989e-001, 9.753387e-002, 1.806068e-002, 7.896253e-003, 2.112553e-002, -1.793489e-002, -2.235348e-002, -3.148494e-002, -3.249366e-002, -7.208067e-003, 2.657560e-002, 6.351527e-002, 7.210311e-002, 3.699490e-002, -1.046665e-002, -5.326382e-002, -4.958372e-002, -3.130871e-003, 1.204328e-002, 1.375979e-002, -1.785447e-003, -4.699834e-002, -7.966027e-002, -5.142039e-002, 1.100540e-003, 1.895305e-002, 9.006925e-003, -2.780071e-003, 7.420187e-003, 4.685896e-002, 6.771577e-002, 2.077462e-002, -1.077712e-002, -5.825792e-003, -1.012847e-002, -1.292908e-003, -3.660163e-002, -6.915317e-002, -6.769326e-002, -3.027501e-002, 1.988607e-002, 5.253891e-002, 4.827545e-002, 9.645303e-003, -3.234958e-002, -3.410786e-002, 9.645841e-003, 4.503706e-002, 5.429511e-002, 5.105511e-002, 8.486787e-004, -5.960520e-002, -5.567095e-002, -7.989878e-003, 9.472637e-003, -6.879778e-003, -3.214313e-002, -4.679807e-002, -3.395188e-002, -2.972247e-003, -6.976156e-003, -3.371448e-002, -2.524875e-002, 1.581503e-002, 3.166329e-002, -2.831391e-003, -5.797403e-002, -7.200667e-002, -5.304383e-002, -2.661945e-002, 1.711737e-003, 1.521155e-002, 3.733778e-004, -2.515362e-002, -1.011521e-002, 3.537358e-002, 8.133097e-002, 1.122333e-001, 1.179078e-001, 6.370852e-002, -1.385857e-002, -3.372490e-002, -8.124876e-003, 9.834506e-003, 3.325712e-002, 2.565579e-002, -1.151349e-003, -1.280057e-002, -7.647154e-003, -1.093387e-002, -3.516830e-002, -1.575608e-002, 2.312094e-002, 5.286531e-002, 4.057023e-002, 9.218510e-003, -6.624388e-003, -3.060080e-002, -2.171221e-002, 1.709122e-002, 4.456666e-002, 4.233526e-002, 1.767096e-002, 5.008030e-003, 2.362968e-002, 6.247411e-002, 9.455314e-002, 1.032710e-001, 3.525811e-002, -1.994366e-002, -1.164532e-002, 8.669634e-003, 1.743750e-004, -7.979201e-003, -1.527875e-002, -2.232429e-002, 7.745372e-003, 4.109956e-002, 2.973898e-002, -6.734829e-003, -9.321469e-003, -2.181988e-002, 2.495592e-003, 4.980192e-002, 4.296430e-002, 2.521427e-002, 8.530538e-003, 7.210096e-003, 1.677702e-002, 3.900998e-002, 4.740131e-002, 3.290931e-002, -7.464587e-003, -4.217991e-002, -4.251852e-002, -3.107395e-002, -3.925792e-002, -6.545640e-002, -2.214301e-002, 4.949309e-002, 4.848369e-002, 8.347045e-003, -1.676931e-002, -3.896317e-002, -4.166311e-002, -8.129888e-003, 3.530299e-002, 3.931699e-002, -1.261926e-002, 7.973078e-003, -6.709908e-002, -3.010669e-002, 4.160359e-002,


© ISO/IEC 2004 — All rights reserved

Copyright International Organization for Standardization
Provided by IHS under license with ISO
No reproduction or networking permitted without license from IHS
Not for Resale

2.030914e-002, 9.752003e-003, 2.163547e-002, 4.572591e-002, 3.028784e-002, -1.200567e-002, -3.115526e-002, -2.093453e-002, -2.993200e-002, -6.601447e-002, -6.661103e-002, -6.958564e-002, -1.185009e-001, -1.326439e-001, -7.370622e-003, 3.981107e-002, -7.142476e-003, -3.320135e-002, -2.346463e-002, -5.712359e-003, 1.648124e-002, 3.400933e-002, 3.889135e-002, 1.780625e-002, -4.114366e-002, -4.042644e-004, -1.371322e-002, -6.774853e-003, 1.228398e-002, -1.414462e-002, -2.037223e-002, -1.288230e-002, 7.764457e-003, 4.342120e-002, 3.912828e-002, -1.215325e-002, -4.515762e-002, -1.096239e-002, 1.136706e-002, 4.822204e-002, 4.654105e-002, -6.944651e-002, -9.572284e-002, -3.652622e-003, -4.662166e-002, -6.314617e-002, -1.759967e-002, -3.259564e-002, -7.195040e-002, -5.107485e-002, -1.260756e-003, 1.539287e-002, 4.498273e-003, -2.353631e-002, 3.265490e-003, 5.821128e-002, 1.423771e-002, 1.850079e-002, 3.765487e-003, 3.981239e-002, 2.505385e-002, -5.280357e-002, -4.962318e-002, 2.886295e-002, 5.356285e-002, 2.852205e-002, 1.711414e-002, 1.425645e-002, 4.076107e-002, 4.177959e-002, -2.973691e-002, -2.378093e-002, 2.470411e-002, -2.335245e-002, -3.870047e-002, 7.595632e-002, 1.221629e-002, -5.924721e-002, 1.831662e-002, 3.502610e-002, -1.140715e-002, -4.746114e-003, 2.157361e-002, 5.162669e-002, 2.849028e-002, -8.330339e-003, -1.435000e-002, -4.869806e-002, -1.786069e-002, 8.316085e-002, 4.817882e-002, -7.665976e-003, -5.298032e-003, 2.841280e-002, 5.347896e-002, 5.610017e-002, 1.480850e-002, 2.472277e-002, 1.832893e-002, -2.000750e-003, 4.754300e-002, 8.163499e-002, 1.365294e-002, -5.458043e-002, -2.441937e-002, -4.116986e-003, -4.359207e-002, 1.816143e-002, -4.903746e-002, -6.764602e-002, -6.704015e-003, 2.655643e-002, 6.112396e-002, 4.226085e-005, -3.845976e-002, -5.734225e-002, -6.343934e-002, -3.295865e-002, 3.231298e-002, 7.224968e-002, 5.742387e-002, 2.792441e-002, 7.759079e-003, 1.399993e-002, 4.036043e-002, 2.064960e-002, 4.445611e-002, 3.776154e-002, 1.366552e-002, 3.937667e-002, 8.441727e-002, 4.513445e-002, 1.457799e-002, 1.991102e-002, 4.707060e-002, 3.529620e-002, -1.091607e-002, -7.609053e-002, -7.686727e-002, -2.414944e-002, 1.133996e-002, 1.546137e-002, 7.347451e-003, 1.622646e-002, 6.925971e-003, -3.630992e-002, -5.050960e-002, -2.600683e-002, -1.834633e-002, -2.882798e-002, -3.552523e-002, -2.270796e-002, -1.410129e-002, -1.025518e-002, 1.157528e-002, 4.863822e-002, 5.176336e-002, 1.665105e-002, 2.843080e-003, 2.298503e-002, 4.318997e-002, 9.566084e-003, 4.638027e-003, 1.862452e-002, 1.922760e-002, -1.452257e-002, -5.226747e-002, -2.646330e-002, 1.082220e-002, 8.471489e-003, -1.418776e-002, -3.801089e-003, 5.050340e-002, 5.805905e-002, 9.858082e-003, -2.746350e-002, -2.176285e-002, -2.581782e-002, -2.714359e-002, -1.028605e-002, 1.232500e-002, -7.521153e-003, -4.499877e-002, -8.659880e-003, 1.284710e-002, 3.360279e-002, 2.059669e-002, -2.892742e-002, -4.593551e-002, 1.451712e-002, 3.830390e-002, 2.511055e-002, 1.822665e-002, 1.231601e-002, -1.089539e-002, -2.610811e-002, 1.015770e-002, 3.797644e-002, 4.386769e-003, -3.009347e-002, -2.826881e-002, 3.839802e-002, 6.286110e-002, 2.970498e-002, 1.182526e-002, 2.596581e-002, 2.666867e-002, 2.635664e-002, 4.029572e-002, 2.667023e-002, -3.096652e-002, -5.335500e-002, -3.566938e-002, -3.431700e-002, 1.272152e-002, 2.297710e-002, -2.040397e-002, -5.012679e-002, -3.855401e-002, 3.176114e-002, 5.687082e-002, 4.824172e-002, 3.214903e-002, 1.013138e-002, -8.730815e-003, 1.073598e-002, 1.749515e-002, -1.049828e-002, -3.043372e-002, -2.404812e-002, 2.248963e-003, 1.355613e-002, -2.319720e-002, -1.644988e-002, 8.422457e-003, 1.608860e-002, 1.615795e-002, 1.637770e-002, -8.156521e-003, -2.037855e-002, -3.725102e-002, -4.503503e-002, -4.240221e-002, -9.067384e-004, 1.195715e-002, 5.453076e-003, -1.401403e-002, -2.025444e-002, -1.170418e-002, 1.360540e-002, 1.618535e-002, 9.336843e-004, -2.640032e-002, -4.903104e-002, -4.116244e-002, -1.725118e-002, -9.589709e-003, -2.619227e-002, -1.711019e-002, -7.396477e-003, -2.137983e-002, -7.480367e-002, -7.731974e-002, -5.731685e-002, -3.642830e-002, -4.624281e-003, 2.879879e-002, 4.422640e-002, 2.501058e-002, -1.636884e-002, -2.385578e-002, -1.009671e-002, 1.324555e-002, 1.451329e-002, 2.160906e-002, 2.048324e-002, 2.769061e-002, 3.670544e-002, 1.880540e-002, -5.909878e-003, -3.278762e-002, -5.653166e-002, -7.557272e-002, -5.741032e-002, -2.436155e-002, -4.664543e-003, -2.961049e-002},
{6.376742e-002, 7.956311e-003, -1.838744e-004, 1.048538e-002, 2.178909e-003, -2.941562e-003, 1.350188e-002, 3.570543e-002, 4.195953e-002, 2.867134e-002, 4.192449e-003, -1.632089e-002, -1.557984e-002, -9.111108e-003, -4.502911e-003, -5.379262e-003, -9.311677e-003, 1.795131e-003, 1.235589e-002, 2.034875e-002, 1.288169e-002, -4.768441e-003, -3.265471e-002, -4.780862e-002, -2.778194e-002, 5.644197e-003, 7.834504e-003, 1.656413e-002, 6.352878e-002, 1.963397e-004, -4.634669e-003, 2.181115e-002, 5.986936e-003, -1.299978e-002, -9.108191e-003, 1.617593e-002, 2.702740e-002, 1.728427e-002, -1.460989e-002, -3.954406e-002, -5.077170e-002, -4.328797e-002, -2.153361e-002, -3.805038e-003, 6.242108e-003, 9.513333e-003, 1.724229e-002, 2.699836e-002, 3.841385e-002, 3.711275e-002, 2.972759e-002, 2.995140e-003, -2.214045e-002, -1.869698e-002, 1.934020e-002, 2.218351e-002, -6.749182e-003, -7.310558e-003, -1.579902e-002, 1.163128e-002, 1.367997e-002, -1.157158e-002, -1.339713e-002, -6.446550e-003, 1.202515e-002, 1.572576e-002, -1.779517e-003, -2.501624e-002, -4.189227e-002, -4.339490e-002, -4.262797e-002, -2.524263e-002, -3.597626e-003, 8.288432e-003, 1.564965e-002, 1.867052e-002, 1.412679e-002, 6.569959e-003, 4.517326e-003, 1.072219e-002, 3.178640e-003, -1.135492e-002, -7.762105e-003, 1.363960e-002, 4.370991e-002, 1.236943e-002, -3.319299e-002, -4.223872e-003, 3.160475e-003, -3.276924e-003, -1.108184e-002, -1.124119e-002, 6.258141e-003, 2.528099e-002, 2.549448e-002, 1.143228e-002,

© ISO/IEC 2004 — All rights reserved


Copyright International Organization for Standardization
Provided by IHS under license with ISO
No reproduction or networking permitted without license from IHS
Not for Resale

5.623809e-003, -6.848603e-004, -9.937071e-003, -2.310410e-002, -2.095594e-002, -9.593752e-003, 2.806206e-003, 1.056064e-002, 1.711450e-002, -1.509945e-004, -2.353037e-002, -3.586978e-002, -2.386169e-002, -1.119828e-002, -1.208418e-002, -1.923900e-002, -1.908812e-003, 2.675063e-002, 2.557345e-002, -2.342463e-002, -1.117255e-002, 5.079451e-003, 5.921616e-003, 5.740088e-003, 1.285523e-002, 2.464901e-002, 2.738094e-002, 2.404938e-002, 1.408407e-002, 1.136146e-002, 1.790770e-002, 1.734767e-002, 4.872403e-003, -1.090456e-002, -6.534392e-003, 7.631527e-003, 2.526401e-002, 4.704480e-002, 3.541478e-002, -2.783873e-003, -3.138671e-002, -3.711636e-002, -1.445566e-002, -1.230870e-002, -2.107835e-002, -1.874243e-002, 9.894322e-003, 8.182296e-003, -2.074846e-002, -1.654752e-002, 1.675194e-002, 2.786271e-002, 2.255257e-002, 1.172166e-002, 9.630881e-003, -5.702514e-003, -1.889216e-002, -3.172281e-002, -2.378330e-002, -1.553136e-003, 1.621131e-002, 1.857155e-002, 1.120452e-002, 4.381465e-003, 1.578420e-002, 4.257561e-002, 7.856203e-002, 7.533937e-002, 3.233972e-002, -1.013945e-002, -3.310372e-002, -2.260520e-002, -7.526792e-003, -1.792828e-002, -2.589885e-002, 3.358040e-003, 5.215104e-003, -3.196329e-002, -1.382144e-002, 2.575880e-002, 3.123518e-002, 1.516598e-002, 2.243058e-003, -5.786778e-003, -1.891793e-002, -3.974306e-002, -6.738534e-002, -6.919745e-002, -3.549636e-002, -3.273665e-003, 1.315185e-002, 1.413722e-002, 6.596514e-003, 6.949557e-003, 3.280030e-002, 7.200351e-002, 8.004123e-002, 4.826831e-002, -3.663516e-003, -3.446327e-002, -3.710026e-002, -2.120681e-002, -2.225503e-002, -2.876598e-002, -4.154857e-003, 1.427089e-002, -2.506717e-002, -1.280012e-002, 1.147436e-002, 8.411875e-003, 3.193388e-003, 1.832372e-002, 2.901784e-002, 2.284920e-002, -1.719774e-002, -6.466590e-002, -8.053780e-002, -4.633480e-002, -7.531174e-003, 1.612152e-002, 1.964446e-002, 5.051373e-003, -1.248398e-002, -1.157919e-003, 2.829692e-002, 5.078959e-002, 3.232556e-002, -1.169519e-002, -5.266378e-002, -6.553147e-002, -4.487017e-002, -2.886923e-002, -3.095897e-002, -1.046840e-002, 2.467006e-002, -5.471146e-003, -2.267450e-002, -2.123881e-002, -6.998115e-003, -1.808881e-003, 4.694727e-002, 8.248680e-002, 7.306544e-002, 2.045203e-002, -4.011277e-002, -6.801400e-002, -4.470120e-002, 6.848763e-003, 3.478446e-002, 4.482926e-002, 2.113806e-002, -2.167539e-002, -3.098004e-002, -1.126924e-002, 9.633465e-003, 1.170191e-002, -1.719889e-002, -6.226587e-002, -8.262371e-002, -6.220852e-002, -2.349551e-002, -1.666419e-002, -6.709394e-003, 3.011710e-002, 3.008052e-002, -4.441004e-002, -3.982632e-002, -1.368784e-002, 1.203203e-002, 6.764459e-002, 9.897329e-002, 8.285965e-002, 2.374576e-002, -3.852510e-002, -6.649546e-002, -4.281406e-002, 1.098072e-002, 4.821701e-002, 6.468811e-002, 4.053146e-002, -1.007548e-002, -3.645502e-002, -2.468126e-002, -1.268300e-002, 9.911764e-004, -4.902145e-003, -4.240653e-002, -5.725240e-002, -3.867491e-002, 4.628364e-003, 2.127442e-002, 5.920606e-003, 2.484448e-002, 3.832451e-002, -4.378075e-002, -3.082413e-002, -1.049462e-002, 1.790698e-002, 6.130347e-002, 7.365924e-002, 4.742103e-002, -6.844627e-003, -5.804426e-002, -7.899591e-002, -5.489105e-002, -5.161767e-003, 3.305974e-002, 5.095075e-002, 3.689750e-002, -1.135535e-003, -2.776138e-002, -1.595874e-002, 3.380023e-003, 1.565254e-002, 1.989416e-002, -1.565481e-003, -1.836458e-002, -4.764509e-003, 2.888151e-002, 5.409788e-002, 2.259243e-002, 1.717278e-002, 2.762265e-002, -1.989570e-002, 2.034049e-003, -3.093237e-003, 1.299912e-002, 3.716174e-002, 3.233929e-002, 7.125586e-003, -2.661888e-002, -5.690667e-002, -7.336595e-002, -6.252484e-002, -2.875454e-002, 3.986896e-003, 1.140753e-002, 3.314076e-003, -1.346894e-002, -2.830314e-002, -1.741419e-002, 1.749040e-002, 3.651509e-002, 4.571672e-002, 2.666192e-002, 6.469863e-003, 5.027276e-003, 2.686301e-002, 4.953230e-002, 3.795304e-002, 1.736380e-002, 4.960440e-003, 1.477067e-002, 2.717389e-002, -2.012360e-003, -3.798130e-003, 5.202424e-003, 3.493496e-003, -5.375641e-004, 4.252174e-004, -7.828611e-003, -3.070494e-002, -4.686320e-002, -4.558449e-002, -2.658358e-002, -2.461140e-002, -2.737318e-002, -2.500830e-002, -2.593241e-002, -2.003893e-002, 1.944821e-002, 5.041153e-002, 5.900356e-002, 3.757419e-002, 1.267255e-002, 1.781234e-003, 5.048454e-003, 2.206083e-002, 2.757461e-002, 9.090437e-003, -1.561294e-002, 3.553287e-002, 2.710025e-002, -1.362273e-002, -1.895715e-002, -1.399303e-003, 1.271646e-002, 3.067710e-002, 3.963596e-002, 2.637926e-002, 2.117414e-003, -2.368392e-002, -3.504251e-002, -2.473550e-002, -1.672191e-002, -1.655873e-002, -9.515646e-003, -3.891868e-003, -2.044286e-002, -1.205756e-002, 1.602232e-002, 4.736958e-002, 5.961635e-002, 5.370038e-002, 3.054571e-002, 1.185692e-003, -1.748274e-002, -1.012368e-002, -9.310483e-003, -2.881045e-002, 2.633849e-002, 2.755791e-003, -2.972789e-002, -7.787741e-003, 3.450254e-002, 6.469316e-002, 6.092381e-002, 2.276707e-002, -2.253924e-002, -5.799365e-002, -5.690841e-002, -2.339851e-002, 1.208824e-002, 3.584360e-002, 4.173224e-002, 3.608130e-002, 5.033016e-003, -6.414877e-002, -1.037789e-001, -7.122247e-002, 1.842329e-002, 1.063672e-001, 1.451408e-001, 1.146382e-001, 4.246321e-002, -3.039034e-002, -5.612280e-002, -3.701215e-002, -3.347157e-002, -1.419642e-002, -3.998736e-002, -5.208543e-002, -3.235688e-002, 1.270218e-002, 4.678472e-002, 5.873921e-002, 3.336590e-002, -3.049173e-002, -9.388802e-002, -1.139959e-001, -4.966809e-002, 3.452705e-002, 8.141799e-002, 1.071310e-001, 8.928601e-002, -7.140046e-004, -1.091047e-001, -1.435822e-001, -8.514586e-002, 4.925376e-003, 7.282689e-002, 7.266811e-002, 2.160281e-002, -3.919928e-002, -7.405957e-002, -8.151315e-002, -4.801929e-002, -2.422219e-002, -3.646457e-002, -3.893712e-002, -7.513917e-002, -7.438380e-002, -2.648588e-002, 5.232682e-003, 2.495613e-002, 1.192954e-002, -1.174693e-002, -3.534116e-002, -6.408361e-002, -5.992508e-002, 1.677881e-002, 6.853577e-002, 1.080837e-001, 1.021725e-001,


© ISO/IEC 2004 — All rights reserved

Copyright International Organization for Standardization
Provided by IHS under license with ISO
No reproduction or networking permitted without license from IHS
Not for Resale

4.867098e-003, -7.113770e-002, -4.306435e-002, 8.654829e-003, 3.686100e-002, 3.628576e-002, 6.963799e-003, -2.400640e-002, -6.361731e-002, -8.709425e-002, -8.642475e-002, -3.334973e-002, -4.580157e-003, -1.917355e-003, -2.922968e-002, -7.064509e-002, -3.072792e-002, 2.354729e-002, 1.762552e-002, -1.321710e-002, -5.734407e-002, -5.732567e-002, -1.552696e-002, 4.659596e-003, -1.566382e-002, -9.880611e-003, 1.266456e-002, 6.998082e-002, 6.500743e-002, -3.325640e-003, -3.012072e-002, 1.342615e-002, 1.428378e-002, -1.155879e-002, -3.913832e-002, -4.306514e-002, -2.917105e-002, -2.525672e-002, -4.504641e-002, -4.691136e-002, -2.395673e-003, 7.819165e-003, 4.021106e-002, 1.257599e-004, -1.436079e-002, 4.860628e-002, 6.199875e-002, 3.363260e-002, -3.293341e-003, -3.793184e-002, -3.273673e-002, 6.263485e-003, 5.436022e-002, 5.346196e-002, -4.375127e-004, -1.158188e-002, 3.891895e-002, 2.800431e-002, -2.317708e-002, -1.328354e-002, 2.917105e-002, 3.868504e-002, 1.748862e-003, -3.143184e-002, -2.520295e-002, 2.320865e-002, 4.165702e-002, 1.420736e-002, -1.414207e-002, 2.976504e-002, 2.573412e-002, 5.982168e-002, 3.580808e-002, 3.999953e-002, 2.514479e-002, -3.502133e-002, 8.224594e-003, 4.984663e-002, 3.675636e-002, 5.495222e-002, 4.454833e-002, 3.889668e-002, 4.288675e-002, 4.462736e-003, -2.167152e-003, 3.854020e-002, 2.947702e-002, -3.183150e-002, -2.429810e-002, 3.048642e-002, 5.766055e-002, 4.366838e-002, -1.160711e-002, -4.487958e-002, 2.054326e-002, 5.562525e-002, 4.454229e-002, 2.999610e-002, 6.679593e-002, 3.370530e-002, 2.949092e-002, 3.814003e-002, 4.297144e-002, -2.773546e-002, -8.925938e-002, -4.384114e-002, 2.176076e-002, 5.586311e-002, 9.487915e-002, 7.164623e-002, 1.929002e-002, 3.875410e-002, -3.120688e-003, -1.846000e-002, 3.646379e-002, 5.486815e-002, 5.838420e-003, -4.225679e-003, 4.854197e-002, 7.001530e-002, 1.925287e-002, -1.931092e-002, -3.374852e-002, -3.917775e-002, -8.843783e-002, -5.689632e-002, 5.191409e-003, 4.797709e-002, -3.277500e-003, -1.174473e-002, 9.540033e-003, 3.335177e-002, 1.381188e-002, -2.288806e-002, -4.019310e-002, -8.242021e-003, 2.939213e-002, 4.460063e-002, 3.074530e-002, 7.046237e-003, 6.097534e-002, 1.350695e-002, -3.686933e-003, 2.549624e-002, 5.325163e-002, 3.868740e-002, 3.082059e-002, 5.642847e-002, 7.223984e-002, 4.669184e-002, 5.966053e-003, -3.520713e-002, -3.431168e-002, -2.752737e-002, -3.360458e-002, -9.589913e-003, 3.404515e-002, -1.340693e-002, -1.481611e-002, 2.983148e-003, 3.125002e-002, 3.156636e-002, -9.471025e-003, -4.822238e-002, -5.749032e-002, -4.846641e-002, -3.915794e-002, -3.657540e-002, -3.306652e-003, 6.526689e-002, 1.178853e-002, -3.638365e-003, -4.944808e-003, 2.531025e-002, 5.765600e-002, 3.786539e-002, 2.978350e-002, 2.945805e-002, 2.256493e-002, 4.824132e-003, -5.320836e-003, 1.842964e-002, 5.307955e-002, 5.041798e-002, 3.311830e-002, 2.840183e-002, -2.049857e-002, -3.569570e-003, 1.430820e-004, 2.725754e-002, 2.509987e-002, -1.338462e-002, -4.980836e-002, -5.865692e-002, -4.588404e-002, -3.637703e-002, -1.990926e-002, 3.038767e-002, 3.102580e-002, -5.759223e-003, -2.521604e-002, -3.259420e-002, -1.252415e-002, 3.284701e-002, 4.829753e-002, 2.689426e-002, 1.219607e-002, 4.977226e-003, -1.037216e-002, -1.371572e-002, 1.306442e-002, 4.942223e-002, 4.959835e-002, 3.006203e-002, 1.013795e-003, -1.052022e-002, 2.171192e-003, -1.915337e-002, 5.689964e-003, 2.250629e-002, 4.434993e-003, -1.592861e-002, -1.626362e-002, -6.024959e-003, -3.459896e-003, 3.437328e-003, 2.240113e-002, -4.055782e-003, -3.335189e-002, -3.796207e-002, -3.079165e-002, -3.292388e-002, -1.929899e-002, 3.921940e-002, 1.599012e-002, -5.227122e-003, -7.516321e-003, -1.845647e-002, -2.480121e-002, -3.069242e-003, 3.227518e-002, 2.496476e-002, -1.642439e-002, -2.617624e-002, 7.970623e-003, -7.299211e-003, -1.967634e-002, -2.128838e-002, -7.881219e-003, -1.087043e-002, -9.658496e-003, -7.089729e-003, -1.102784e-002, -1.920155e-002, -1.625884e-002, -4.136306e-003, -2.334528e-003, -1.087340e-002, -8.451937e-003, -6.221971e-003, -2.699165e-002, -4.323075e-002, 4.527952e-003, 1.840549e-002, -2.911848e-002, -4.539742e-002, -5.257963e-002, -5.707088e-002, -4.239799e-002, -2.202995e-002, -2.875635e-002, -4.201610e-002, -1.971677e-002, 1.447020e-002, -2.058739e-002, -1.858965e-002, -2.084104e-002, -2.330801e-002, -2.835220e-002, -2.422047e-002, -1.934398e-002, -2.310746e-002, -2.556117e-002, -1.492466e-002, 6.535000e-003, 1.524103e-002, 3.006345e-002, 2.514423e-002, 1.533028e-002, 7.658638e-003, -2.403526e-002, -1.588660e-002, 1.243641e-002, -8.366599e-004, -3.339880e-002, -5.594130e-002, -6.717239e-002, -6.051775e-002, -4.456214e-002, -3.535584e-002, -3.142844e-002, -5.561199e-003, 1.377753e-002},
{3.506969e-002, -2.155718e-003, 1.408860e-003, 1.414603e-002, -3.480021e-003, -1.030898e-002, -1.669137e-002, -1.042873e-002, 3.348538e-003, 1.078561e-002, 1.120643e-002, -2.784153e-003, -1.636083e-002, -1.181890e-002, 1.083594e-002, 1.954366e-002, 2.090226e-002, 1.999962e-002, 6.673299e-003, -1.031454e-002, 2.115865e-003, 2.349884e-002, 3.941965e-002, 4.787216e-002, 5.124596e-002, 4.093304e-002, 1.750983e-002, 5.993495e-003, 2.439685e-002, -3.695260e-003, -4.629434e-003, 1.581196e-002, 1.106708e-002, -9.625041e-003, -1.707029e-002, -2.746741e-004, 1.084518e-002, 2.443567e-002, 2.510728e-002, 1.486819e-002, -5.387110e-003, -2.660226e-002, -2.212484e-002, 9.237695e-003, 2.737571e-002, 1.685819e-002, 9.409480e-003, -5.519718e-004, -1.506174e-002, -1.953603e-002, -9.261292e-003, 2.761060e-003, 3.321655e-003, 2.616756e-003, 3.338315e-003, -8.467402e-003, -2.409205e-002, -1.525126e-002, -1.069476e-002, 6.582561e-003, 1.811860e-002, -1.129533e-003, -1.069430e-002, -6.977680e-003, 6.844737e-003, 1.109871e-002, 1.340204e-002, 1.532016e-002, 1.584458e-003, -1.955703e-002, -3.653284e-002, -3.759062e-002, -5.738139e-004, 1.887380e-002, 5.008812e-003, -6.257405e-003, -1.022182e-002, -1.524959e-002, -1.359170e-002, -8.864438e-003, -

© ISO/IEC 2004 — All rights reserved


--`,,```,,,,````-`-`,,`,,`,`,,`---

Copyright International Organization for Standardization
Provided by IHS under license with ISO
No reproduction or networking permitted without license from IHS
Not for Resale

2.215606e-003, -8.346439e-003, -2.355820e-002, -2.421963e-002, -1.798597e-002, -2.878399e-002, -3.105131e-002, -1.097548e-002, 2.390236e-004, 7.828122e-003, -6.606846e-003, -1.639931e-002, -1.563621e-002, -1.070774e-002, -2.428021e-003, 7.185498e-003, 1.699087e-002, 1.165869e-002, -1.396854e-002, -3.787371e-002, -3.810346e-002, -1.154224e-002, 6.851330e-003, -3.949776e-003, -1.584843e-002, -1.881519e-002, -1.164814e-002, -6.015022e-004, 1.316194e-002, 1.639076e-002, 1.192168e-002, -7.986158e-003, -2.429214e-002, -2.016266e-002, -1.370243e-002, -2.338052e-002, -1.974854e-002, 3.834357e-003, 9.164103e-003, -1.009403e-002, -2.453648e-002, -2.494959e-002, -1.225453e-002, 5.672149e-003, 2.540566e-002, 5.447727e-002, 5.722467e-002, 2.343871e-002, -1.226737e-002, -2.858272e-002, -1.911973e-002, -5.586599e-003, -9.103245e-003, -1.763585e-002, -1.705007e-002, -5.418727e-003, 7.259413e-003, 2.356183e-002, 3.508518e-002, 2.056583e-002, 4.332999e-003, -1.252883e-002, -1.608170e-002, 6.987127e-003, -3.531034e-003, -1.708862e-002, 1.122976e-003, -9.387724e-005, -8.160517e-003, -1.907592e-002, -2.143994e-002, -6.226184e-003, 2.974793e-002, 5.086571e-002, 7.585104e-002, 8.022504e-002, 5.238017e-002, 4.955765e-003, -2.717175e-002, -3.285223e-002, -1.774308e-002, -1.491363e-002, -1.540314e-002, -1.004558e-002, -6.018744e-003, 1.123131e-003, 9.947176e-003, 2.384658e-002, 8.150410e-003, -1.552050e-002, -1.249361e-002, -6.172958e-003, 1.806928e-002, 6.936265e-003, -1.087195e-002, -1.211876e-002, -9.975533e-003, -2.630870e-003, -1.842228e-002, -1.391194e-002, 1.002576e-002, 3.056794e-002, 2.900928e-002, 4.357398e-002, 6.087488e-002, 4.737716e-002, 9.737471e-003, -1.682643e-002, -2.746203e-002, -1.635860e-002, -1.068110e-002, -1.151047e-002, -2.361179e-003, -5.095442e-003, -4.489288e-003, -5.304062e-003, 3.617058e-004, -6.982997e-003, -4.049999e-002, -3.735020e-002, -6.601636e-003, 6.997329e-003, 9.206481e-004, -1.295388e-002, -1.643672e-002, -6.214390e-003, -3.370701e-003, -1.521330e-002, -1.012828e-002, 1.175088e-002, 7.791766e-003, -2.246107e-002, -1.586867e-002, 2.216371e-002, 2.812801e-002, 9.630817e-003, -8.627459e-004, -7.138617e-003, -6.647157e-003, 6.785395e-003, 1.218890e-002, 1.739850e-002, 1.453117e-002, 2.384597e-003, -6.909706e-003, -4.961949e-003, -8.551917e-003, -3.044535e-002, -3.564000e-002, -1.804050e-003, 3.222479e-003, -1.992445e-002, -1.489855e-002, -1.881704e-002, -2.174309e-004, -1.063843e-002, -1.892247e-002, -8.617919e-003, -6.574744e-004, -2.665068e-002, -7.590663e-002, -7.815544e-002, -3.604438e-002, -3.970985e-003, -2.641052e-003, 4.607364e-003, 4.009099e-003, 9.871787e-004, 1.593932e-002, 3.221740e-002, 3.609667e-002, 3.086901e-002, 1.630809e-002, -3.584085e-004, 4.209112e-003, 8.718404e-003, 9.871650e-004, -8.045982e-003, 1.647766e-002, 1.834299e-002, -2.933632e-002, -1.034099e-002, -6.940669e-003, 1.108642e-003, -1.356851e-002, -1.547584e-002, 4.811617e-004, 3.283866e-003, -3.998990e-002, -9.962010e-002, -1.103040e-001, -8.520966e-002, -3.970437e-002, -1.231612e-002, 4.667127e-003, 1.215782e-002, 5.229752e-003, 1.185513e-003, 2.310327e-002, 3.256458e-002, 3.294878e-002, 2.559412e-002, 1.716583e-002, 2.289095e-002, 2.873318e-002, 2.878704e-002, 1.500963e-002, 2.722897e-002, 2.787839e-002, -2.476200e-002, -8.781917e-003, 7.403378e-003, 4.409134e-003, -8.682898e-003, -6.057014e-003, 1.347182e-002, 2.013860e-002, -1.793047e-002, -7.630164e-002, -9.888748e-002, -8.822419e-002, -3.632427e-002, 7.658113e-003, 2.831557e-002, 3.061226e-002, 9.340121e-003, -2.504748e-002, -1.508111e-002, 4.256722e-003, 1.085020e-002, 2.334702e-002, 2.529563e-002, 2.721110e-002, 4.241573e-002, 4.281820e-002, 2.182546e-002, 1.762451e-002, 2.405110e-002, -1.508574e-002, -6.275150e-003, 2.846549e-002, 2.365158e-002, 1.675818e-002, 2.663163e-002, 4.568993e-002, 5.250324e-002, 3.629767e-002, -1.640982e-002, -5.621985e-002, -6.592504e-002, -2.285765e-002, 3.374309e-002, 5.498606e-002, 4.743963e-002, 1.231036e-002, -4.145218e-002, -5.444708e-002, -2.255812e-002, 2.211410e-003, 2.416666e-002, 2.527529e-002, 2.473957e-002, 3.801021e-002, 4.641135e-002, 2.868896e-002, -6.776194e-004, 8.203820e-003, -1.946733e-002, -1.848080e-003, 3.564901e-002, 3.596398e-002, 2.101901e-002, 3.599534e-002, 6.015475e-002, 7.761117e-002, 6.451939e-002, 1.153852e-002, -4.489689e-002, -6.941639e-002, -3.853394e-002, 2.660996e-002, 6.017679e-002, 5.264829e-002, 1.565837e-002, -4.611505e-002, -8.619006e-002, -5.593445e-002, -6.048181e-003, 2.119990e-002, 1.914728e-002, 3.756609e-003, 6.932918e-003, 2.034432e-002, 1.875303e-002, -2.068713e-002, -1.812336e-002, -2.338819e-002, -1.006072e-002, 2.450187e-002, 1.505688e-002, -1.415663e-002, 3.401101e-003, 3.879523e-002, 6.485945e-002, 6.185749e-002, 9.478764e-003, -6.819512e-002, -1.080831e-001, -8.611619e-002, -1.054439e-002, 5.652033e-002, 6.367747e-002, 2.865048e-002, -3.707893e-002, -9.242013e-002, -8.424536e-002, -2.388702e-002, 1.708397e-002, 1.321252e-002, -1.406181e-002, -2.787913e-002, -2.653502e-002, -5.868777e-003, -3.157092e-002, -3.852642e-002, -1.999657e-002, -3.673557e-002, -5.136673e-003, -6.719163e-003, -2.070041e-002, -3.285191e-005, 3.531314e-002, 7.040479e-002, 8.294216e-002, 5.404295e-002, -2.372413e-002, -9.568858e-002, -9.862591e-002, -2.151594e-002, 6.600132e-002, 9.748997e-002, 5.530826e-002, -1.211396e-002, -6.070753e-002, -5.005384e-002, 2.564081e-003, 4.459173e-002, 5.266634e-002, 2.030197e-002, -1.917279e-002, -2.480804e-002, 1.074731e-004, -1.004164e-002, -3.178138e-002, -5.377481e-003, -5.721101e-002, 2.471362e-003, 2.484319e-002, 9.627090e-003, -1.104063e-002, -1.109538e-002, 2.782152e-002, 6.207134e-002, 5.154435e-002, 4.101171e-003, -5.666025e-002, -7.838104e-002, -7.999522e-003, 8.606250e-002, 1.252426e-001, 8.294671e-002, -4.595343e-003, -5.068217e-002, -2.815067e-002, 1.361805e-002, 4.331595e-002, 4.355190e-002, -1.270317e-003, -5.347465e-002, -5.073292e-002, 4.669173e-003, 2.952331e-002, 1.891042e-003, 1.164596e-002, -


© ISO/IEC 2004 — All rights reserved

Copyright International Organization for Standardization
Provided by IHS under license with ISO
No reproduction or networking permitted without license from IHS
Not for Resale

3.148770e-002, 1.203570e-002, 1.158960e-002, -4.053519e-002, -5.601657e-002, -1.822367e-002, 4.090269e-002, 7.762572e-002, 7.326000e-002, 3.005597e-002, -2.677040e-002, -6.901424e-002, -1.255056e-002, 7.151456e-002, 1.060142e-001, 4.802596e-002, -3.556103e-002, -5.271503e-002, 1.201014e-002, 7.894785e-002, 1.038469e-001, 8.017270e-002, 8.379842e-003, -6.996992e-002, -8.421761e-002, -4.064933e-002, 1.043458e-002, 9.664334e-003, 2.441671e-002, -1.557040e-002, -1.626074e-002, -5.565024e-003, -5.044762e-002, -5.079923e-002, -1.698911e-002, 3.466031e-002, 7.465976e-002, 9.461787e-002, 8.312939e-002, 3.632115e-002, -2.012420e-002, -1.865147e-002, 5.849333e-002, 7.118255e-002, -3.797934e-003, -3.995731e-002, -9.232326e-003, 5.494604e-002, 8.697773e-002, 8.697938e-002, 4.647851e-002, -1.493146e-002, -6.658393e-002, -6.610218e-002, -3.463875e-002, 4.437663e-003, 5.257273e-004, -6.182076e-003, -1.568287e-002, -3.014695e-002, -2.462721e-002, -5.931024e-002, -6.784846e-002, -7.446848e-002, -5.003817e-002, -1.591952e-002, 3.476043e-002, 5.627302e-002, 5.677252e-002, 2.028474e-002, -1.723203e-002, 1.463670e-002, 1.551623e-002, -4.183702e-002, -5.381542e-004, 1.831146e-002, 1.879867e-002, 4.093534e-002, 5.590341e-002, 4.079051e-002, -1.496377e-002, -6.564436e-002, -7.014020e-002, -3.302856e-002, 1.758492e-002, 7.651159e-003, -4.835891e-002, 2.023024e-002, -1.518201e-002, -3.321986e-002, -5.263987e-002, -4.146141e-004, 4.848557e-003, -3.678138e-002, -5.344842e-002, -2.619369e-003, 1.948714e-002, 4.666987e-003, -2.903136e-002, -6.581929e-002, -6.464163e-002, -6.110172e-002, -7.138231e-002, -7.269766e-003, -3.449807e-003, -2.312425e-002, 1.683719e-002, -2.396633e-003, 2.132610e-002, 1.103041e-002, 9.018193e-003, -4.420031e-002, -5.999363e-002, -8.546467e-003, 8.372246e-003, -4.089085e-002, 3.982461e-002, 2.314497e-002, 3.144788e-002, 1.606978e-002, -2.229823e-002, -7.166609e-003, 2.784074e-002, -3.913935e-002, -9.362601e-002, -3.646760e-002, -5.489971e-002, -6.750826e-002, -8.390640e-002, -5.168982e-002, -3.460184e-002, -4.009808e-002, -4.827441e-002, -3.566182e-002, -2.083184e-002, -5.037627e-002, -4.259175e-002, 1.007425e-001, 8.059619e-002, 1.837874e-002, 3.152971e-003, 8.074901e-004, 1.736763e-002, 1.662880e-002, -3.859895e-003, -5.887244e-004, -6.455678e-003, 2.336066e-002, 3.122953e-002, -6.964133e-004, -5.394150e-002, -3.774085e-002, -4.689244e-002, -4.105748e-002, 9.328081e-004, -2.267902e-002, -2.901290e-002, -1.793189e-002, -1.288699e-002, 7.570571e-003, -7.447812e-004, -5.291562e-002, -2.567197e-002, -1.279588e-002, -3.338628e-002, -6.197049e-002, -2.863507e-002, -3.057117e-002, -1.453163e-002, 7.711176e-002, 5.776219e-002, 1.132205e-002, 1.558565e-002, 1.388446e-002, -1.088370e-002, -2.561679e-002, -8.608955e-005, 1.698226e-002, 1.009480e-002, 4.214196e-003, 3.539374e-003, 1.695443e-002, 3.590873e-002, 5.547964e-002, 4.341400e-002, 3.758308e-002, 2.783678e-002, 1.297656e-002, 3.523564e-002, 2.418458e-002, -8.024640e-003, -8.959291e-003, 3.394157e-002, 9.706772e-003, -2.657353e-002, -3.487850e-002, -2.899600e-002, 2.951392e-004, 4.158677e-002, 1.776326e-002, -3.598073e-002, -2.618065e-002, 4.163301e-003, -1.598452e-002, -1.815127e-002, -5.364101e-004, -7.899537e-003, -2.409207e-002, -2.516401e-002, -1.763813e-002, 1.261150e-002, 4.817562e-002, 6.546110e-002, 6.725785e-002, 7.657553e-002, 4.150209e-002, 2.290414e-002, 3.824944e-002, 2.881353e-002, 2.682090e-002, -1.083267e-002, 4.112707e-002, 2.428025e-002, -2.707113e-002, -6.947504e-002, -8.510871e-002, -6.996443e-002, -3.277697e-002, -3.109403e-002, -5.570371e-002, -3.588417e-002, 3.864900e-003, -2.836941e-003, -3.112429e-003, 2.323793e-002, 8.404018e-003, -4.641343e-003, 1.384842e-003, 1.730892e-002, 3.786882e-002, 3.858144e-002, 3.276165e-002, 5.341819e-002, 6.539188e-002, 3.035421e-002, 1.269763e-002, 1.879109e-002, 1.558493e-002, 2.841083e-002, 3.189334e-003, 8.969978e-003, 2.648940e-002, 1.025865e-002, -2.879358e-002, -6.225132e-002, -6.168172e-002, -3.492338e-002, -2.418143e-002, -2.808617e-002, -1.549469e-002, 1.848011e-002, 1.934336e-002, 2.028688e-002, 2.824808e-002, 1.457268e-002, 1.487416e-002, 2.648803e-002, 2.583922e-002, 5.819217e-003, -4.159018e-002, -3.721504e-002, 3.016369e-002, 3.450693e-002, 1.603263e-002, 1.930538e-002, 1.546935e-002, 7.887080e-003, 3.947477e-002, 3.508326e-002, -9.865035e-003, 3.622818e-003, 1.916851e-002, 1.257495e-002, 2.164964e-003, -4.724276e-004, 1.078402e-002, 1.632881e-002, 1.048247e-002, 1.902064e-002, 3.253837e-002, 3.434510e-002, 4.521316e-002, 3.680588e-002, -8.764907e-003, -3.576039e-002, -5.337218e-002, -7.688517e-002, -1.083823e-001, -1.176218e-001, -5.337126e-002, 1.533350e-002, 6.645932e-003, 2.547073e-002, 5.126888e-002, 3.021898e-002, 1.520025e-002, 5.871021e-002, 6.929397e-002, 1.972150e-003, -5.420966e-002, -2.214414e-002, 1.071373e-002, 2.954184e-002, 3.850673e-002, 4.462415e-002, 4.264025e-002, 3.495585e-002, 4.289769e-002, 3.774983e-002},
{2.370704e-002, -1.825737e-002, -3.632226e-002, -2.781881e-002, -6.921640e-003, 2.712598e-002, 3.913635e-002, 1.003593e-002, -2.347406e-002, -3.385772e-002, -3.016325e-002, -1.501824e-002, -2.364191e-003, 1.057830e-002, 2.866766e-002, 3.054529e-002, 3.009191e-002, 2.597191e-002, 1.396501e-002, -4.888252e-003, -1.475283e-002, -1.505492e-002, -1.182122e-002, -5.782253e-003, -4.976361e-003, -2.281191e-003, -1.905547e-002, -3.661301e-002, -3.532833e-002, 1.605684e-002, -8.947839e-003, -3.334405e-002, -3.231963e-002, -2.178298e-003, 1.863837e-002, 7.446296e-003, -1.564817e-002, -2.463260e-002, -2.623421e-002, -1.498413e-002, -9.283317e-003, -3.655727e-003, -4.696093e-003, -4.419741e-003, -3.032525e-003, -2.220870e-003, 1.775763e-003, 1.766337e-003, -1.056701e-003, -2.838328e-003, 5.482888e-003, 2.433971e-002, 3.033468e-002, 1.942329e-002, 2.788262e-003, 1.857827e-004, 6.052338e-003, 8.488813e-004, 2.999633e-002, -4.762720e-003, -3.969863e-002, -3.260028e-002, -1.950277e-002, -1.193592e-002, -

© ISO/IEC 2004 — All rights reserved


Copyright International Organization for Standardization
Provided by IHS under license with ISO
No reproduction or networking permitted without license from IHS
Not for Resale

4.637692e-003, -7.057337e-004, 1.157147e-002, 2.044089e-002, 2.833539e-002, 2.130318e-002, 4.055884e-003, -2.103357e-002, -3.814170e-002, -4.005834e-002, -3.651347e-002, -2.373854e-002, -6.400615e-003, -2.682992e-003, 2.000832e-003, 7.077953e-003, 1.766067e-002, 3.165678e-002, 3.222434e-002, 1.522062e-002, -1.293342e-002, 3.977460e-003, 3.011536e-002, 4.726144e-002, 3.710954e-003, -2.111436e-002, -3.833660e-002, -2.807996e-002, -7.484700e-003, 1.193121e-002, 3.174106e-002, 4.638835e-002, 5.584587e-002, 4.489827e-002, 1.968027e-002, -1.432436e-002, -4.558559e-002, -6.491018e-002, -6.084352e-002, -5.107744e-002, -1.829555e-002, 1.438033e-002, 2.381898e-002, 2.025548e-002, 1.773975e-002, 7.490132e-003, -1.498448e-003, 4.338290e-003, 2.020679e-002, -9.299875e-003, -2.926173e-002, 2.312454e-002, 4.727803e-002, 1.475600e-002, -1.546819e-002, -1.945634e-002, -7.298735e-003, -3.013505e-003, 8.793796e-004, 2.515269e-002, 3.586354e-002, 3.209254e-002, 1.923374e-002, -8.622917e-003, -3.604270e-002, -5.634773e-002, -5.953778e-002, -3.070000e-002, -3.502283e-003, 3.049528e-002, 6.308976e-002, 6.281323e-002, 4.954480e-002, 3.542147e-002, 2.304947e-002, -8.872209e-003, -3.401723e-002, -2.583504e-002, -7.256590e-003, -3.647159e-002, -1.303631e-002, 4.360522e-002, 1.829354e-002, 4.084224e-004, 1.361745e-002, 1.070329e-003, -2.302545e-002, -2.806952e-002, -4.890674e-003, -2.532830e-003, -1.139715e-003, -4.077145e-004, -1.043274e-002, -2.366705e-002, -3.542987e-002, -2.740819e-002, 1.681103e-002, 4.737448e-002, 7.484898e-002, 9.907431e-002, 8.432222e-002, 5.749303e-002, 3.405934e-002, 2.336377e-002, -1.073817e-003, -3.295573e-002, -4.438099e-002, -1.211698e-002, -5.566808e-003, -2.857181e-002, 3.162032e-002, 5.820707e-003, 2.045880e-002, 2.031513e-002, -2.311537e-002, -5.716227e-002, -3.698713e-002, -1.195764e-002, -1.642332e-002, -1.349087e-002, -4.091537e-003, -6.212668e-003, -9.014876e-003, -8.946628e-003, -2.485182e-003, 2.286221e-002, 5.109542e-002, 7.038839e-002, 8.116453e-002, 6.355045e-002, 3.327879e-002, 4.721587e-003, -2.472653e-003, -9.818180e-003, -1.074166e-002, -2.151602e-002, -1.142416e-002, 1.714434e-002, -9.929415e-004, 1.994602e-002, 5.636938e-003, 1.871275e-002, -1.281041e-002, -4.948729e-002, -4.745032e-002, -1.687506e-002, -6.533360e-003, -1.301646e-002, -2.028227e-002, -1.260010e-002, -1.010141e-002, -4.016498e-003, -3.228322e-003, -7.469593e-003, -7.966122e-003, 5.909829e-003, 2.102978e-002, 2.578378e-002, 7.318035e-003, -1.303000e-002, -3.212335e-002, -4.645965e-002, -4.517998e-002, -1.808100e-002, -3.182924e-003, 2.003042e-003, 2.862021e-002, 2.753398e-002, 1.857577e-002, 1.205402e-002, -1.879640e-003, -3.994894e-002, -3.627071e-002, -6.525135e-003, 1.120888e-002, 6.103135e-004, -1.335399e-002, -1.899519e-002, -9.558489e-003, 7.765805e-004, 6.181497e-003, -1.489714e-003, -1.377542e-002, -3.163470e-002, -3.420835e-002, -2.075395e-002, -1.150981e-002, -2.242965e-002, -4.289351e-002, -5.931576e-002, -6.380999e-002, -5.485042e-002, -2.571280e-002, 4.889995e-003, 1.151069e-002, 2.546968e-002, 3.739194e-002, 2.424419e-002, 7.553359e-003, -2.138667e-002, -2.590037e-002, 5.738431e-003, 2.825290e-002, 2.805764e-002, 7.511232e-003, -1.266967e-002, -2.507722e-002, -1.135363e-002, 1.214523e-002, 1.969295e-002, 1.193869e-002, -7.820413e-003, -2.969532e-002, -3.759836e-002, -2.126372e-002, -1.205867e-002, -1.496375e-002, -2.872468e-002, -4.440488e-002, -5.039505e-002, -4.297184e-002, -1.918643e-002, 1.067610e-002, 1.588219e-002, 1.073770e-002, 2.950318e-002, 3.169556e-002, 6.820568e-003, 1.959933e-003, 2.305742e-002, 4.579837e-002, 4.039185e-002, 2.352406e-002, -1.016501e-002, -3.507180e-002, -4.176058e-002, -1.808249e-002, 1.165715e-002, 2.466748e-002, 1.507799e-002, -7.025517e-004, -1.215373e-002, -1.657089e-002, 1.901204e-003, 1.225937e-002, 7.699455e-003, -1.075936e-002, -2.462266e-002, -3.103670e-002, -2.810414e-002, -1.041334e-002, 9.371909e-003, 1.347147e-002, 3.347409e-003, 1.554273e-002, 3.557358e-002, 2.680508e-002, 4.225575e-002, 6.357323e-002, 6.527145e-002, 4.262229e-002, 1.222588e-002, -2.142505e-002, -3.961543e-002, -2.742664e-002, -3.150570e-003, 1.848502e-002, 2.896935e-002, 1.555530e-002, 4.021512e-003, 4.620329e-003, 1.184056e-002, 2.496549e-002, 3.251302e-002, 2.114100e-002, -5.470968e-003, -2.465443e-002, -3.028268e-002, -2.889258e-002, -1.279082e-002, 2.887021e-003, 1.569026e-002, 1.719819e-002, 9.697369e-003, 3.254728e-002, 4.127526e-002, 5.312700e-002, 5.829109e-002, 4.442072e-002, 2.498076e-002, 3.105379e-003, -9.907569e-003, -1.546036e-002, -4.843233e-003, 8.599599e-003, 1.527366e-002, 2.057914e-002, 9.496619e-003, 7.219573e-003, 1.803564e-002, 2.676215e-002, 3.000799e-002, 2.900918e-002, 6.201935e-003, -2.100458e-002, -3.720769e-002, -4.083201e-002, -2.704983e-002, -8.527084e-003, 1.474116e-003, 1.327706e-002, 3.557605e-002, 1.814825e-002, 1.330316e-002, 2.479333e-002, 2.858557e-002, 1.092473e-002, -1.033172e-002, -1.422358e-002, 2.582297e-003, 3.040371e-002, 3.362379e-002, 1.528752e-002, -8.069210e-004, -9.150847e-003, -5.297180e-003, 1.412485e-004, 7.540374e-003, 2.073079e-002, 3.032102e-002, 2.562362e-002, 8.841336e-004, -1.838120e-002, -2.055200e-002, -1.959407e-002, -1.158384e-002, 2.871648e-003, 1.031753e-002, 7.280506e-003, 1.042462e-002, 3.237431e-002, 2.233502e-002, -1.657200e-002, -1.050903e-002, 3.102554e-003, -2.146690e-002, -4.604349e-002, -2.878294e-002, 1.474534e-002, 5.328166e-002, 6.025662e-002, 2.967106e-002, -2.091817e-002, -4.845565e-002, -3.114116e-002, -1.072331e-002, 7.233694e-003, 1.246011e-002, 1.475577e-002, -1.383501e-003, -2.739214e-002, -6.934754e-003, 2.333011e-002, 3.874000e-002, 3.554763e-002, 2.473093e-002, 1.348151e-002, 7.215931e-003, -1.348060e-003, 3.264829e-003, 1.367223e-002, -4.382710e-002, -9.941797e-003, 3.214763e-002, 1.033345e-002, -7.387125e-003, 1.077610e-002, 3.920931e-002, 6.720544e-002, 5.569443e-002, 9.362434e-003, -5.540537e-002, -9.717511e-002, -6.424998e-002, -


© ISO/IEC 2004 — All rights reserved

--`,,```,,,,````-`-`,,`,,`,`,,`---

Copyright International Organization for Standardization
Provided by IHS under license with ISO
No reproduction or networking permitted without license from IHS
Not for Resale

1.555178e-002, 1.564882e-002, -4.490391e-003, -4.991924e-002, -8.335367e-002, -6.796116e-002, 3.156092e-003, 4.513926e-002, 4.270536e-002, 1.237140e-002, -3.149504e-002, -5.514035e-002, -3.126132e-002, -5.508379e-004, -1.698884e-002, -4.445380e-003, -3.692467e-002, -2.081864e-003, 5.185420e-003, -2.250531e-002, -2.089501e-002, 4.065973e-003, 2.235250e-002, 2.836904e-002, 1.991922e-002, -5.406352e-003, -4.947106e-002, -9.643674e-002, -7.112317e-002, 7.209487e-003, 5.228012e-002, -2.152918e-002, -1.118817e-001, -1.045019e-001, -1.950234e-002, 5.842113e-002, 7.754584e-002, 6.505248e-002, 2.320498e-002, -2.459704e-002, -4.671027e-002, -4.340990e-002, 8.406539e-005, -3.840607e-003, 4.226831e-004, -1.460631e-002, -1.063510e-002, -1.782801e-002, -1.742130e-002, 1.949709e-002, 4.737661e-002, 4.701753e-002, 2.192522e-002, 7.010505e-003, 1.240591e-002, 7.002718e-004, -5.072712e-002, -7.197078e-002, 3.622911e-002, 9.686861e-002, -2.388258e-002, -1.269547e-001, -5.033594e-002, 3.436407e-002, 6.139278e-002, 5.869796e-002, 4.864442e-002, 4.835490e-002, 4.850892e-002, 4.499397e-002, 1.475929e-002, -2.330470e-004, -8.249754e-004, 2.459897e-002, 4.023387e-002, 1.876830e-002, -5.743938e-003, -1.648749e-002, -2.066200e-002, -4.120851e-002, -6.542871e-002, -7.157839e-002, -3.818553e-002, 6.319856e-003, 7.345113e-002, 6.185487e-002, -4.684938e-002, 7.107644e-002, 1.383030e-001, 1.219228e-002, -6.271007e-002, 4.395623e-002, 6.656616e-002, 4.934704e-002, 1.223519e-002, -2.905325e-002, -3.669269e-002, -1.150228e-002, 2.829684e-002, 4.800722e-002, 1.884830e-002, -2.149531e-002, 1.110874e-002, 7.783323e-002, 2.613834e-002, -1.532200e-002, -5.077966e-002, -1.428234e-002, 4.906475e-003, -2.959658e-002, -7.010162e-002, -1.659633e-002, -3.924804e-002, 6.822406e-002, 1.032916e-001, -4.685060e-002, 3.890043e-002, 1.039719e-001, 5.184217e-002, 1.019755e-002, 6.747103e-002, 1.560626e-002, -1.258038e-002, 2.864511e-002, -2.259174e-002, -2.419735e-002, 2.948677e-002, -7.497330e-003, -2.407226e-003, 2.620380e-002, -2.021684e-003, 2.179485e-002, 3.763334e-002, 2.838640e-003, -1.742810e-003, -1.925906e-002, -3.877973e-002, -3.011465e-002, -1.682870e-002, -2.482014e-002, -9.116132e-002, -1.373997e-001, -2.212725e-002, 2.003946e-002, -7.099404e-002, -9.810649e-003, 1.988647e-002, 5.955830e-002, 3.786204e-002, -2.202839e-002, -1.050254e-001, -1.374001e-001, -1.187392e-002, 4.450702e-002, 3.073142e-002, 1.646803e-002, -7.325889e-002, -4.349152e-002, 9.265279e-003, -4.017426e-003, 2.120130e-002, 9.864127e-004, -3.357321e-002, -2.978995e-002, -2.836173e-002, -2.470900e-002, -2.293528e-003, 5.728004e-002, 4.071100e-002, -4.106542e-002, -7.189812e-002, -5.359588e-002, -3.262476e-002, -2.550518e-002, -1.402938e-002, -3.049117e-002, 5.389857e-003, 5.359031e-002, -3.199956e-002, -1.279214e-001, -1.084736e-001, -3.241520e-002, 4.986380e-002, 3.338222e-002, -2.652523e-002, -6.073082e-002, -5.102982e-002, -2.322098e-002, -2.057700e-002, 3.519696e-003, -1.371019e-002, -4.619911e-002, -6.351528e-002, -3.764507e-002, 1.843472e-002, 8.967274e-002, 1.292677e-001, 1.037088e-001, 3.256722e-002, -2.449966e-002, -4.064415e-002, -2.849385e-002, 1.128564e-002, -2.202375e-002, -4.457413e-002, -4.170866e-002, 5.856926e-002, 1.618127e-002, -7.903380e-002, -6.039349e-002, 2.873355e-002, 1.071297e-001, 1.193715e-001, 8.264284e-002, 1.094615e-002, -3.472250e-002, -4.002598e-002, -4.747707e-002, -5.362908e-003, -2.198137e-002, -3.746824e-002, -5.271016e-002, -5.621122e-002, -1.763047e-002, 3.351564e-002, 5.079544e-002, 3.425363e-002, 4.085819e-003, -1.086665e-002, -2.371893e-002, -1.254039e-002, 5.266055e-003, -3.825097e-002, -4.401707e-002, -6.908878e-002, 6.450157e-003, 5.160610e-002, -1.133903e-002, -4.180495e-002, -1.960104e-002, 2.591494e-002, 4.951405e-002, 3.329869e-002, -1.174189e-002, -4.244655e-002, -4.544979e-002, -4.933348e-002, -3.433309e-003, -2.259691e-002, -2.027959e-002, -1.074594e-002, -2.062027e-002, -1.853063e-002, -3.380522e-004, 8.024087e-003, 1.029844e-002, 1.242756e-002, -7.461435e-004, -1.515851e-002, 7.769296e-003, -2.092176e-002, -3.255602e-002, -2.712709e-002, -6.467132e-002, -5.411406e-002, 3.483911e-002, 2.718794e-002, 5.351935e-004, -4.985872e-004, 5.253985e-003, 7.871953e-003, 1.192990e-002, 1.332520e-003, -9.944837e-003, -2.977938e-002, -3.413231e-002, 1.287605e-002, -6.723023e-003, -1.885300e-002, 3.789622e-003, 7.372337e-003, 1.830176e-002, 2.476384e-002, 2.989199e-002, 2.662385e-002, 6.982768e-003, 4.546680e-005, 9.291138e-004, -3.562852e-003, -1.739832e-002, 2.918835e-003, 6.264570e-003, -3.178248e-002, -6.038049e-002, -4.295360e-002, 2.742242e-002, 4.300493e-002, 3.590067e-002, 3.603470e-002, 3.336047e-002, 2.725505e-002, 2.323515e-002, 1.260692e-002, -7.441688e-003, -1.051814e-002, 1.894012e-002, 4.639184e-003, 5.557380e-004, 1.039079e-002, 9.758010e-003, 1.034647e-002, 1.558804e-002, 1.613076e-002, 9.751447e-003, 1.269075e-002, 2.640019e-002, 8.123488e-003, -1.621952e-002, 1.529468e-002, 4.985455e-002, 4.651258e-002, 6.553395e-003, -2.886833e-002, -7.101935e-002, -3.959922e-002, 4.197494e-002, 8.076446e-002, 8.528691e-002, 7.941520e-002, 6.859281e-002, 5.582816e-002, 4.006198e-002, 1.610939e-002, 3.802680e-003, 1.430071e-002},
{-2.396033e-003, 1.304239e-002, 1.497128e-002, -1.752443e-002, -2.968131e-002, -1.459020e-002, -4.879102e-003, -4.425202e-003, 5.915389e-005, 1.250397e-002, 1.702642e-002, 2.854378e-002, 2.695857e-002, 2.006282e-002, 7.225227e-003, 4.613282e-003, 4.404503e-003, -1.178846e-002, -3.948934e-002, -6.201604e-002, -5.970361e-002, -2.020533e-002, 1.490603e-002, 1.027753e-002, -1.234881e-002, 5.791903e-003, 3.415636e-002, 3.333276e-002, 2.396823e-002, 1.602593e-002, 2.196718e-002, 6.647160e-003, -1.134662e-002, -6.922312e-003, -6.348455e-003, -1.271853e-002, -1.806163e-002, -6.021931e-003, 7.668288e-003, 1.971842e-002, 3.134492e-002, 3.395859e-002, 3.048995e-002, 2.671669e-002, 3.833649e-002, 4.871656e-002, 3.766039e-002, 1.219893e-002, -

© ISO/IEC 2004 — All rights reserved


Copyright International Organization for Standardization
Provided by IHS under license with ISO
No reproduction or networking permitted without license from IHS
Not for Resale

9.651774e-003, -2.159590e-002, -1.209737e-002, 1.819444e-002, 4.082452e-002, 2.656687e-002, -5.167883e-003, -3.234895e-003, -1.420528e-003, -2.992105e-003, -4.329338e-003, 3.894888e-003, 1.004035e-002, 2.649067e-003, -3.154921e-003, -2.720084e-002, -5.151544e-002, -5.383130e-002, -3.998918e-002, -1.794577e-002, 1.719574e-003, 1.078433e-002, 5.724371e-003, -1.949483e-003, 1.439522e-003, 1.122017e-002, 2.375388e-002, 1.707971e-002, -4.866189e-003, -1.237329e-002, -1.808698e-002, -1.123426e-002, 7.010541e-003, 1.958016e-002, 2.473747e-002, 1.340633e-002, -6.646936e-003, -2.365277e-002, -3.485242e-002, -1.578338e-002, -1.322979e-003, 1.891355e-002, 1.101432e-002, -1.603623e-002, -3.964312e-002, -6.316518e-002, -5.722817e-002, -3.366710e-002, -3.396207e-003, 2.058799e-002, 2.093465e-002, 6.205080e-003, -2.324338e-003, 4.490919e-003, 9.343092e-003, 2.635991e-003, -1.371543e-002, -4.204591e-002, -4.595869e-002, -3.693857e-002, -1.667848e-002, 1.159250e-003, 1.047430e-002, 3.495806e-003, -6.081774e-003, 6.127543e-003, 2.348799e-003, -3.557739e-002, -1.297155e-002, 1.128997e-002, 3.055409e-002, 1.230367e-002, -7.747190e-003, -2.830331e-002, -4.396661e-002, -3.786283e-002, -1.567826e-002, 2.286407e-002, 4.504974e-002, 3.673932e-002, 2.343426e-002, 1.469169e-002, 1.726093e-002, 1.641187e-002, 5.827670e-003, -1.452774e-002, -3.846722e-002, -4.467428e-002, -3.302062e-002, -8.985278e-003, 8.506778e-003, 1.253733e-002, 5.984910e-003, -1.116491e-002, -1.916302e-002, 1.901759e-002, -5.105924e-003, 6.581642e-004, 1.720789e-002, 1.355049e-002, 1.733302e-002, 1.191055e-002, -5.842237e-003, -3.619603e-002, -2.928323e-002, 3.336410e-003, 2.826473e-002, 3.903836e-002, 3.047293e-002, 5.212402e-003, 1.014185e-003, 4.754746e-003, 1.135355e-002, 3.874370e-003, -4.915490e-003, -1.496052e-002, -1.470494e-002, 2.098230e-004, 1.512017e-002, 2.024910e-002, 2.216829e-002, 1.559532e-002, 7.520047e-003, -1.548678e-002, -1.131006e-003, 1.474389e-002, 1.523552e-002, -2.412935e-003, 2.932232e-004, 3.538040e-002, 2.611921e-002, -2.315294e-003, -1.658369e-002, -5.980299e-003, 8.353807e-003, 2.009519e-002, 3.134001e-002, 2.007146e-002, -8.833809e-003, -1.437521e-002, -1.528065e-002, -1.219263e-002, -2.165134e-002, -2.038557e-002, -1.664097e-002, -3.329617e-003, 2.446058e-002, 3.715458e-002, 2.760701e-002, 1.376069e-002, 1.389408e-002, 1.975824e-002, 8.738626e-003, -7.640356e-003, 2.489657e-003, 1.816207e-002, -1.301270e-002, 8.017343e-003, 4.743671e-002, 2.070443e-002, 5.329850e-003, 6.514446e-003, 1.284116e-002, 1.506199e-002, 3.296364e-002, 4.747103e-002, 2.390304e-002, -4.959634e-003, -2.084915e-002, -2.529285e-002, -2.926416e-002, -4.019615e-002, -4.196925e-002, -3.718301e-002, -1.832152e-002, 1.145849e-002, 3.373855e-002, 2.517863e-002, 9.430603e-004, -1.582892e-002, 2.268714e-003, 2.073184e-002, -3.718130e-003, -8.397705e-003, 1.469563e-002, -9.695298e-003, 1.907435e-002, 2.051921e-002, 1.132992e-003, 1.341441e-003, 1.642893e-002, 2.265073e-002, 1.824146e-002, 3.236716e-002, 4.508024e-002, 3.312279e-002, 7.324315e-003, -2.033005e-003, -6.710634e-003, -2.406564e-002, -4.467020e-002, -4.930413e-002, -5.105527e-002, -3.792798e-002, -1.586580e-002, 6.463639e-003, 1.105727e-002, -9.185713e-003, -2.785735e-002, -2.131216e-002, 1.282083e-002, 9.899104e-003, -2.033887e-002, 9.339175e-003, -1.372400e-002, 8.375430e-003, -6.224549e-003, -2.295202e-002, -1.362522e-002, 6.129737e-003, 1.072275e-003, -4.582302e-003, 1.197333e-002, 2.525632e-002, 3.364376e-002, 2.960804e-002, 2.908616e-002, 2.951426e-002, 8.760949e-003, -2.134546e-002, -2.796793e-002, -3.515247e-002, -4.144285e-002, -3.108531e-002, -1.811297e-002, -5.003610e-003, -1.300244e-003, -8.349697e-003, -1.564298e-002, -5.017067e-003, 1.419802e-002, -2.461988e-002, -2.321938e-003, -3.162475e-002, -2.294711e-002, -3.996777e-002, -4.514534e-002, -3.102450e-002, -1.875315e-002, -2.780540e-002, -3.251933e-002, -1.799172e-002, -4.954517e-003, 1.448530e-002, 2.942113e-002, 4.239879e-002, 5.304780e-002, 3.944111e-002, 6.109387e-003, -6.467262e-003, -1.056343e-002, -2.690532e-002, -2.006400e-002, -1.455210e-002, -4.826622e-003, 1.669174e-002, 2.601637e-002, 1.919536e-002, -1.230101e-003, 5.077575e-003, -1.659414e-002, -2.199254e-002, -5.115984e-002, -4.192599e-002, -4.972589e-002, -4.497964e-002, -2.089124e-002, -1.023785e-002, -1.277783e-002, -3.267390e-002, -3.818164e-002, -3.498086e-002, -1.187114e-002, 1.749034e-002, 4.200204e-002, 5.829577e-002, 4.666608e-002, 1.482681e-002, 2.819876e-003, 9.040739e-003, 6.143979e-003, 1.643803e-002, 1.425597e-002, 1.554975e-002, 3.953668e-002, 6.192072e-002, 5.365320e-002, 8.124648e-003, -1.716205e-002, -2.430788e-002, -2.982641e-002, -4.016703e-002, -2.648015e-002, -2.940574e-002, -1.388112e-002, 1.923480e-002, 3.723592e-002, 3.875910e-002, 9.028047e-003, -2.874517e-002, -4.563137e-002, -3.292611e-002, -1.213091e-003, 2.879163e-002, 4.083832e-002, 2.747090e-002, -2.081525e-003, -1.220460e-002, 5.167540e-003, 3.058617e-002, 4.302231e-002, 3.289749e-002, 2.144974e-002, 2.756466e-002, 6.098285e-002, 7.744020e-002, 2.782742e-002, -3.099519e-002, -2.252526e-002, -1.994915e-002, -7.056554e-003, -9.253369e-003, -3.169717e-002, -1.547511e-002, 2.458089e-002, 5.803485e-002, 7.078304e-002, 4.440808e-002, -3.065108e-004, -3.954651e-002, -4.855919e-002, -2.098850e-002, 9.530913e-003, 1.917624e-002, -5.255756e-003, -4.114703e-002, -4.989412e-002, -3.208437e-002, 1.163751e-002, 3.812126e-002, 2.010606e-002, -1.339282e-002, -3.074235e-002, 1.830267e-003, 5.652720e-002, 3.462319e-002, -2.614094e-002, 2.400015e-003, 8.626863e-003, 1.968613e-002, -3.781764e-002, -7.766744e-002, -4.803647e-002, -3.604043e-004, 3.951910e-002, 4.327550e-002, 2.469324e-002, -1.063886e-002, -4.480630e-002, -6.099521e-002, -3.951320e-002, -5.744693e-004, 9.818397e-003, -2.944393e-002, -7.793675e-002, -8.687186e-002, -4.679716e-002, 7.895103e-003, 5.618462e-002, 5.582201e-002, 9.543106e-003, -4.788605e-002, -4.913002e-002, 2.955729e-003,


© ISO/IEC 2004 — All rights reserved

Copyright International Organization for Standardization
Provided by IHS under license with ISO
No reproduction or networking permitted without license from IHS
Not for Resale

1.294207e-002, -1.327104e-002, 3.629478e-002, 4.148744e-002, 3.103799e-002, -4.295085e-002, -6.617935e-002, -3.572830e-002, -3.227604e-003, 2.864069e-002, 3.575712e-002, 1.341739e-002, -2.242971e-002, -6.174543e-002, -6.682113e-002, -3.456929e-002, 9.757016e-003, 3.341778e-002, -4.642307e-005, -5.504311e-002, -5.810252e-002, -7.708136e-003, 2.313517e-002, 3.615782e-002, 3.778429e-002, 5.362559e-003, -2.677462e-002, -3.125152e-002, 3.154841e-003, 1.026940e-002, -8.451236e-003, 6.087251e-002, 7.802969e-002, 7.203873e-002, -4.457246e-004, -4.659839e-002, -5.743645e-002, -4.609096e-002, -2.169376e-002, -1.970818e-003, 2.703003e-003, -1.652492e-002, -3.819457e-002, -4.072860e-002, 1.993906e-003, 4.803512e-002, 7.635727e-002, 6.427019e-002, 7.610682e-003, -2.097709e-002, -2.162104e-002, -1.068312e-002, 1.611963e-002, 2.863046e-002, 2.555765e-002, 4.506662e-003, -5.591625e-003, 6.757349e-003, -1.216474e-003, -1.272980e-003, 6.760824e-002, 9.463839e-002, 6.046628e-002, 1.342836e-002, -1.467649e-002, -4.186730e-002, -5.138682e-002, -4.598693e-002, -2.455523e-002, 1.891756e-002, 3.010180e-002, 4.512092e-003, -1.630611e-002, 3.305768e-002, 5.364465e-002, 6.427190e-002, 7.981296e-002, 6.263875e-002, -3.799079e-003, -3.230598e-002, -1.503622e-003, 4.801071e-002, 4.550057e-002, 1.088934e-003, -5.083068e-002, -6.899164e-002, -3.927606e-002, -6.705037e-003, -7.981443e-003, 5.273703e-002, -5.872464e-004, 3.230056e-002, 6.487952e-002, 3.581453e-002, -9.263633e-003, 1.718910e-003, -7.529887e-003, -4.893074e-002, -3.533125e-002, 4.553035e-002, 4.526173e-002, 9.092126e-005, 3.404770e-002, -2.938340e-003, -4.114059e-002, 9.251164e-003, 5.132836e-002, -2.290264e-002, -4.028887e-002, -1.601268e-002, -8.175902e-003, 1.008299e-002, -1.621063e-003, -9.899428e-003, -2.582641e-002, -2.915867e-002, -1.822924e-003, 7.165975e-003, 1.566318e-002, -1.156426e-001, -2.006863e-002, 3.269982e-002, 8.332319e-003, -2.958439e-002, 3.500500e-002, 7.792729e-002, -2.918068e-002, -8.080819e-002, 3.208368e-002, 3.471876e-002, 1.593153e-003, 6.264773e-002, 3.803106e-002, -1.631564e-002, -1.000556e-002, 4.505307e-002, -3.499571e-003, -6.846496e-003, 3.197585e-002, -7.558509e-002, -2.411066e-002, 2.165377e-002, -2.217294e-002, -1.243557e-003, 2.386557e-002, 7.041341e-003, -2.682613e-002, -4.632898e-002, -6.484944e-002, -3.012033e-002, -1.609412e-002, -3.197098e-002, -7.868781e-002, -7.001952e-002, 2.808620e-002, -4.533133e-002, -5.015051e-002, 5.608741e-002, 4.175696e-002, -2.293540e-002, 4.163272e-002, -8.621749e-003, -4.506509e-002, -4.984661e-002, 3.461206e-002, 3.214034e-002, 8.287932e-002, 1.073123e-001, -9.447932e-002, -3.538688e-002, 5.922966e-002, -6.687763e-002, -5.860573e-002, 2.542344e-002, 2.060872e-002, -1.857185e-002, -6.560144e-002, -1.999215e-002, -4.262000e-002, -2.057132e-002, 2.845243e-002, 4.468825e-002, 5.633781e-003, -1.951898e-002, -2.139370e-002, 2.375846e-002, 6.051306e-002, 2.991656e-002, -2.242091e-002, 8.889325e-003, -4.712984e-002, -2.642568e-002, -2.584945e-002, -1.369930e-002, 2.572505e-002, 5.197586e-002, 5.574862e-002, -2.753679e-002, -9.530741e-002, -4.875155e-002, -3.389370e-002, -5.002596e-003, 1.807711e-002, 1.984556e-002, 2.667239e-002, 1.811296e-002, 6.541520e-003, -7.263929e-002, -4.136130e-002, 6.155946e-002, 1.310655e-001, 1.277901e-001, 9.733494e-002, 7.119456e-002, 4.883987e-002, 1.956548e-002, -5.286540e-003, -6.638503e-003, -2.844880e-002, -3.768333e-002, 9.038419e-003, 1.163424e-002, -5.153157e-002, -1.468374e-002, -2.496887e-003, 3.326430e-002, 4.001591e-002, 4.146508e-002, 6.726529e-002, 9.663974e-002, 1.036087e-001, 5.145281e-002, 8.400892e-005, 1.514342e-002, 4.061463e-002, 2.112530e-002, -7.468693e-002, -8.164453e-002, 2.675948e-003, 6.274436e-002, 5.361649e-002, 2.559653e-002, -5.730128e-003, -3.845249e-002, -5.317363e-002, -1.676859e-002, 3.621848e-003, -5.137700e-002, -1.897662e-002, 1.983714e-002, 2.910414e-002, -3.684076e-002, -3.925251e-002, -5.180447e-002, -5.514833e-002, -3.438886e-002, -5.812333e-003, 3.208512e-002, 6.382178e-002, 6.453873e-002, 1.442259e-003, -4.763361e-002, -1.542611e-002, 5.199837e-002, 5.124608e-002, -3.140747e-002, -5.426946e-002, -2.442681e-002, -1.605669e-002, -3.650062e-002, -6.483533e-002, -8.937846e-002, -1.022065e-001, -5.798394e-002, 4.996682e-003, -1.121906e-002, -5.143574e-002, -9.367085e-003, 1.841420e-002, 2.355516e-002, -2.673657e-002, -3.723350e-002, -1.044837e-002, -7.234645e-002, -9.795585e-002, -9.158373e-002, -6.071098e-002, -3.312631e-002, -2.397137e-002, -6.489345e-002, -7.383752e-002, -2.921875e-002, 3.871285e-002, 4.990272e-002, 2.863523e-002, 3.294518e-002, 6.076220e-002, 2.871980e-002, -2.008915e-002, -5.415747e-002, -4.614335e-002, -8.418548e-003, 4.109533e-002, 2.344983e-002, -3.097220e-002, -3.996614e-002, 1.486606e-003, 1.346610e-002, 4.363232e-003, -1.141577e-002, -3.716189e-002, 1.562367e-002, 2.578137e-002, -2.696752e-002, -6.895609e-002, -6.572413e-002, -3.474160e-002, -1.445554e-002, -2.550355e-002, -3.661230e-002, -2.878594e-002, 3.007551e-002, 3.753686e-002, 3.728828e-002, 7.169753e-002, 1.148910e-001, 1.092647e-001, 8.957239e-002, 7.827772e-002, 8.326570e-002, 8.087746e-002, 4.027430e-002, -1.324203e-002, -1.462194e-002, 8.775711e-003, 3.003376e-002, 1.582270e-002, -1.095380e-002, 4.527620e-003, -9.587785e-003, -5.928062e-003, 5.113172e-002, 6.135760e-002, 4.038432e-002, 3.460847e-002, 3.868445e-002, 3.384542e-002, -3.288949e-003, -3.944117e-002, -3.122932e-002, 2.680290e-002},
{-9.891231e-002, -2.528134e-003, 1.401833e-002, -2.947759e-002, -3.683088e-002, -2.772616e-002, -3.036053e-002, -3.749296e-002, -4.116121e-002, -1.739027e-002, 7.417211e-003, 2.114498e-002, 2.051740e-002, 1.857371e-002, -3.487857e-003, -1.956858e-002, -2.454484e-002, -1.264552e-002, 2.929251e-003, 2.565091e-002, 3.906695e-002, 3.743095e-002, 3.714100e-002, 4.876029e-002, 4.553476e-002, 4.704256e-002, 6.688345e-002, 4.625435e-002, -2.926724e-002, 7.095046e-003, 3.995753e-002, -7.956946e-003, -

© ISO/IEC 2004 — All rights reserved


Copyright International Organization for Standardization
Provided by IHS under license with ISO
No reproduction or networking permitted without license from IHS
Not for Resale

1.710902e-002, 1.176095e-002, 1.214042e-002, -2.347020e-002, -4.086167e-002, -2.197713e-002, 1.158312e-002, 2.933837e-002, 3.961105e-002, 3.386884e-002, 2.426784e-002, 4.541116e-003, -1.119464e-002, -1.019148e-002, -2.009084e-003, 7.989036e-005, -2.518061e-003, 2.069206e-002, 3.809560e-002, 3.362452e-002, 1.681546e-002, 1.816089e-002, 2.869607e-002, 2.932826e-002, 1.258979e-002, -3.628353e-002, 2.858260e-002, -6.271407e-003, -1.873343e-002, 2.084619e-002, 3.447968e-002, -4.555468e-003, -4.001171e-002, -3.926507e-002, -2.056375e-002, -7.810973e-003, -1.475111e-002, -1.797006e-002, -8.594028e-003, 2.149352e-003, -8.330764e-003, -8.885843e-003, -1.020048e-002, 2.786550e-003, 2.742675e-003, -6.052353e-003, 3.147823e-004, 2.091309e-002, 2.588621e-002, 2.020475e-002, -2.803377e-003, -5.517557e-003, 1.378250e-002, -1.714092e-002, -6.217306e-002, -4.246241e-003, -2.810238e-002, 9.006096e-003, 4.376714e-002, 2.190320e-002, -2.062408e-003, -1.366152e-002, -1.737637e-002, -2.828789e-002, -4.858884e-002, -5.559119e-002, -3.687615e-002, 8.600013e-004, 2.595622e-002, 2.663919e-002, 1.589372e-002, 2.894520e-003, -4.532940e-004, -2.071291e-003, -4.121517e-003, -1.010467e-003, 1.384285e-002, 2.134281e-002, 2.134461e-002, 9.702202e-003, -1.139994e-002, -8.066530e-003, -1.206026e-002, -8.093271e-002, -1.734090e-002, -1.090260e-002, 2.403295e-002, 2.758197e-002, 2.117511e-002, 3.383411e-002, 4.253260e-002, 4.834343e-003, -3.656695e-002, -5.855889e-002, -4.381963e-002, -5.711987e-003, 3.886068e-002, 5.791104e-002, 4.239472e-002, 1.517666e-002, -1.400138e-002, -3.043657e-002, -3.714843e-002, -2.044868e-002, -4.211641e-003, 9.979665e-003, 2.093535e-002, 1.110812e-002, 1.149079e-002, 6.709520e-003, -2.165041e-002, -4.420783e-003, -4.824304e-002, 4.864285e-003, 1.577257e-003, 3.432515e-003, 9.971370e-003, 3.138616e-002, 7.374484e-002, 7.403552e-002, 1.461769e-002, -2.449852e-002, -3.678216e-002, -2.024423e-002, 1.791224e-002, 4.695561e-002, 4.734530e-002, 1.271259e-002, -2.731980e-002, -5.937187e-002, -7.639186e-002, -7.762652e-002, -4.842295e-002, -1.562177e-002, 7.389624e-003, 2.257818e-002, 1.961795e-002, 8.036378e-003, 7.622534e-003, -2.275421e-002, -2.045969e-002, -1.848653e-002, 1.803135e-002, -1.270659e-002, -2.635833e-002, -1.104254e-002, 3.675232e-002, 7.773297e-002, 7.398706e-002, 1.811269e-002, -6.151258e-003, -1.082749e-002, 4.949033e-003, 2.916551e-002, 3.461517e-002, 1.540621e-002, -1.473130e-002, -4.199240e-002, -7.521882e-002, -8.783035e-002, -7.740319e-002, -4.352595e-002, -3.118538e-003, 2.275384e-002, 4.091425e-002, 4.253999e-002, 1.891415e-002, 3.026639e-003, -2.566560e-002, -3.774792e-002, -1.054340e-002, 1.788168e-002, -2.701102e-002, -4.690620e-002, -1.528262e-002, 1.943592e-002, 4.289645e-002, 4.261888e-002, 1.649712e-002, 1.134099e-002, 1.007059e-002, 1.708643e-002, 2.532347e-002, 1.636197e-002, -4.235191e-003, -1.529791e-002, -2.338559e-002, -4.425196e-002, -5.280495e-002, -3.739335e-002, 1.830909e-003, 3.713303e-002, 5.636168e-002, 6.538960e-002, 5.729817e-002, 2.215612e-002, 1.130287e-003, -2.577532e-002, -5.114958e-002, -1.720812e-002, 1.246992e-002, -3.433841e-002, -4.779107e-002, -1.894596e-002, -2.586425e-003, -9.868743e-004, -2.735232e-003, 1.053568e-003, -5.825327e-004, -3.556985e-003, 1.023611e-003, 1.431661e-003, -5.886589e-003, -2.237203e-002, -1.547755e-002, -2.790060e-003, -1.675560e-003, 1.107950e-003, 3.579775e-003, 3.569927e-002, 6.584880e-002, 7.937219e-002, 7.290230e-002, 4.724920e-002, -3.087013e-003, -2.146424e-002, -2.467032e-002, -3.547213e-002, -1.874626e-002, 1.279970e-002, -3.240299e-002, -3.249774e-002, -2.027848e-002, -1.618530e-002, -2.569478e-002, -2.781961e-002, -1.589622e-002, -8.561547e-003, -5.219591e-003, -1.015167e-002, -2.533468e-002, -2.598149e-002, -2.333234e-002, -1.050895e-002, 1.026833e-002, 2.003012e-002, 2.468261e-002, 2.028683e-002, 3.050457e-002, 4.626112e-002, 4.643685e-002, 3.459335e-002, 1.163598e-002, -3.747148e-002, -6.171962e-002, -3.425963e-002, -5.622746e-003, 2.808667e-003, 1.086694e-002, -1.987250e-002, -1.353165e-002, -2.252784e-002, -2.910482e-002, -2.832304e-002, -2.304876e-002, -1.265135e-002, -3.301511e-003, 5.284497e-003, -7.383238e-003, -1.960322e-002, -1.334290e-002, -1.507053e-003, 1.523920e-002, 2.137571e-002, 1.836567e-002, 1.799541e-002, 1.284787e-002, 1.233295e-002, 1.017473e-002, 3.696829e-003, -1.070599e-002, -3.115228e-002, -6.648380e-002, -7.804187e-002, -4.423593e-002, 1.242740e-002, 3.707106e-002, 1.777003e-002, 4.918446e-004, 6.267294e-004, -1.497483e-002, -2.311833e-002, -2.044745e-002, -1.044854e-002, 3.132201e-003, 1.358120e-002, 1.879651e-002, 1.030062e-002, 4.763707e-003, 7.254910e-003, 2.626926e-002, 3.720115e-002, 3.338197e-002, 1.828019e-002, 1.565629e-002, 1.376811e-002, 2.167386e-002, 1.679969e-002, -2.485112e-003, -1.996689e-002, -3.221816e-002, -4.370513e-002, -4.151446e-002, -4.366715e-002, -1.205976e-003, 5.722704e-002, 3.089527e-002, 2.222957e-002, 2.408594e-002, 9.637264e-003, -3.211294e-003, -7.762397e-003, -2.702727e-003, -1.044473e-003, 1.062847e-002, 1.564314e-002, 1.815037e-002, 2.632655e-002, 3.377666e-002, 5.086996e-002, 5.497824e-002, 3.802098e-002, 1.603628e-002, 1.141069e-002, 1.657959e-002, 3.443204e-002, 3.309036e-002, 1.541597e-002, 1.404222e-003, -5.893209e-003, 1.940383e-003, 2.188270e-002, 3.511073e-003, -3.215589e-003, 5.801116e-002, 3.396337e-002, 2.665059e-002, 1.276630e-002, -1.282671e-002, -1.513283e-002, -8.115071e-004, 1.142609e-002, 1.108218e-003, -1.470159e-002, -2.148298e-002, -1.938003e-002, 5.181463e-003, 2.121902e-002, 3.759629e-002, 2.819743e-002, -3.247265e-003, -3.868145e-002, -4.043854e-002, -1.254821e-002, 3.197842e-002, 4.810070e-002, 3.152083e-002, -1.009516e-002, -4.628673e-002, -4.374520e-002, 1.763965e-002, 3.632977e-002, -2.093833e-003, 3.429565e-002, 8.199695e-003, -1.550196e-002, -5.170518e-002, -5.496817e-002, -1.362404e-002, 4.931573e-002, 9.496661e-002, 9.418951e-002, 4.331232e-002, -1.106164e-002, -


© ISO/IEC 2004 — All rights reserved

Copyright International Organization for Standardization
Provided by IHS under license with ISO
No reproduction or networking permitted without license from IHS
Not for Resale

4.879322e-002, -3.762647e-002, -1.333397e-002, 8.293397e-003, -8.854812e-003, -5.542259e-002, -1.018418e-001, -8.564432e-002, -1.526787e-002, 5.161455e-002, 9.284691e-002, 7.220990e-002, 1.147150e-002, -5.400310e-002, -9.149659e-002, -4.217942e-002, 1.245532e-002, -1.867930e-002, -1.774563e-003, -1.337546e-002, -4.078759e-002, -3.900139e-002, -7.663459e-003, 3.156330e-002, 5.844724e-002, 6.929766e-002, 4.124048e-002, -1.404384e-002, -6.090637e-002, -9.562535e-002, -8.583143e-002, -3.525368e-002, 8.906602e-003, 4.711298e-003, -5.959961e-002, -1.225119e-001, -1.198760e-001, -6.835203e-002, -1.491395e-002, 4.015243e-002, 7.376217e-002, 7.089974e-002, 3.977949e-002, -2.928359e-003, -1.537741e-002, -8.872466e-004, -3.112407e-002, -1.812174e-002, 1.407453e-002, -2.308715e-003, 1.768237e-002, 3.042723e-002, 2.196711e-002, 1.031423e-002, 1.260945e-002, 2.552183e-002, 2.289543e-002, -2.236336e-002, -7.895773e-002, -8.164838e-002, -9.116557e-003, 5.887102e-002, 6.699235e-002, 1.177131e-002, -6.537979e-002, -9.342331e-002, -6.161237e-002, -1.814200e-002, 8.524133e-003, 2.073156e-002, 2.316542e-002, 7.273241e-003, 2.021735e-003, 1.533030e-002, 2.983587e-002, -1.730936e-003, -1.012461e-002, 3.453165e-002, -2.284082e-002, -1.064418e-002, -1.600060e-002, -5.618000e-002, -8.255317e-002, -7.001084e-002, -2.238722e-002, 3.955934e-002, 6.828924e-002, 3.547338e-002, -1.572864e-002, 2.172695e-002, 5.098462e-002, 4.507815e-002, 3.332458e-002, 5.281485e-003, -2.379837e-002, 5.300471e-003, 4.215823e-002, 2.857854e-002, -1.786312e-003, -5.739790e-002, -1.068107e-001, -1.045982e-001, -4.140119e-002, 5.287477e-003, -4.608843e-003, 9.627386e-003, 2.481065e-002, -3.925447e-002, 2.439537e-004, 2.827480e-002, 1.758520e-002, 1.254588e-002, 1.180392e-002, 4.198832e-003, -2.472973e-002, -6.324918e-003, 3.440448e-002, 3.221187e-002, 1.312064e-002, -3.441393e-002, -6.416902e-002, -2.695167e-002, 2.265130e-002, 1.404446e-002, 5.163816e-002, 4.899458e-002, 3.354037e-002, 4.911437e-002, 2.474133e-002, -3.285019e-002, -7.120709e-002, -4.648132e-002, -1.782175e-002, -3.261852e-002, 2.523888e-002, 9.811055e-003, -8.258422e-003, 2.633423e-002, 6.018437e-002, 5.356233e-002, 1.938683e-002, 3.797358e-002, 5.609094e-002, 1.764003e-002, -7.972605e-002, -6.796084e-002, 8.696574e-003, 3.744397e-002, 2.614722e-002, 1.865903e-002, 2.491638e-002, 1.272009e-002, -2.221231e-002, -1.674491e-002, -2.294837e-002, -6.456755e-003, -3.447547e-004, 2.324430e-002, 4.237186e-002, 1.152252e-002, 9.030278e-003, 1.943770e-002, -1.660398e-002, 2.000472e-002, 2.891850e-002, 2.859465e-002, -3.771569e-003, 3.081687e-003, 1.135267e-001, 6.282206e-002, -2.356551e-002, 5.348047e-002, 1.594939e-001, -1.490383e-002, -9.572042e-002, -4.434069e-002, 1.426989e-002, 7.401541e-002, 8.761347e-002, 7.244401e-002, -4.142513e-002, -7.189601e-002, -4.932834e-002, 7.340152e-002, 1.180786e-001, -9.444508e-002, -1.154740e-001, 4.077212e-002, 6.933019e-002, 2.688003e-002, 3.501876e-002, 2.449550e-003, 2.464773e-002, 6.403019e-003, 1.272536e-002, -2.802509e-002, -5.499810e-002, -8.638465e-003, 2.542054e-002, 1.469471e-005, 2.386415e-002, 1.327374e-002, -6.660189e-002, -8.067019e-002, -6.161368e-002, -2.990139e-002, 2.521649e-002, 5.385901e-002, 5.501448e-002, -4.606832e-002, -6.651041e-002, -5.779749e-002, -7.123608e-003, 4.632653e-002, -2.077765e-002, -5.040127e-002, -7.551004e-003, -1.458405e-002, -4.813226e-003, 2.312106e-002, 1.640080e-002, 1.620485e-002, -1.880897e-002, -8.778890e-003, -4.242154e-002, -5.010100e-002, -3.748108e-003, 3.795705e-002, 4.751115e-002, 3.372279e-002, -1.187426e-002, -6.168104e-002, -3.974276e-002, -3.380296e-002, -2.217309e-002, -7.906606e-003, 1.700132e-002, 3.095596e-002, -2.616329e-002, -2.898491e-002, -4.908354e-002, -3.710894e-002, -2.439533e-003, -1.679582e-004, -2.058424e-002, -3.064815e-002, -4.030593e-002, -3.978725e-002, -1.532385e-002, -5.761502e-003, -2.947109e-003, -2.610034e-002, -4.544152e-003, -2.962914e-002, -3.742587e-002, 7.215989e-003, 5.476797e-002, 6.155873e-002, 2.974641e-002, -9.634195e-003, -1.537822e-002, 1.070882e-002, 8.096429e-003, -1.453044e-002, -1.495664e-002, 2.781691e-003, 1.252125e-002, 9.598348e-003, 1.033591e-002, 6.704741e-003, -2.200632e-002, -4.787914e-003, 1.737180e-002, 2.158782e-002, 5.854074e-003, -1.129336e-002, -2.457236e-002, -3.860564e-003, 1.058727e-004, -7.810138e-003, -2.894836e-002, 3.339764e-003, -1.018213e-002, -2.743976e-002, 4.213105e-003, 3.059658e-002, 2.914522e-002, 1.051891e-002, -2.540330e-003, 2.045443e-002, 5.005632e-002, 1.890755e-002, -2.729638e-002, -2.172650e-002, -2.032554e-002, -2.281147e-002, 1.896228e-002, 2.694785e-002, 4.814163e-002, 3.745162e-002, 8.776297e-003, 1.122412e-002, 2.723069e-002, 2.048239e-002, 1.274357e-002, 1.198764e-002, 2.420316e-002, 1.044677e-002, -1.407769e-002, -3.488247e-002, 2.947351e-002, 1.294466e-002, -5.122974e-003, 8.687201e-003, 1.203648e-002, 6.274026e-003, -2.644482e-003, 1.696353e-003, 3.967347e-002, 4.847741e-002, -2.619126e-003, -5.078395e-002, -3.728999e-002, -3.396879e-002, -5.316523e-002, -1.249057e-002, 3.407222e-002, 4.328329e-002, 4.681856e-002, 2.966697e-002, 1.518764e-002, 1.506724e-002, 2.071767e-002, 2.945751e-002, 3.387776e-002, 2.798425e-002, 9.381458e-003, -2.099834e-002, -3.357515e-002, 2.827779e-002, 3.487648e-002, 9.139578e-003, -2.179009e-003, -2.297639e-002, -3.825352e-002, -3.461760e-002, -6.679503e-003, 3.496693e-002, 1.656378e-002, -4.380375e-002, -7.133586e-002, -4.803783e-002, -3.628588e-002, -5.817560e-002, -4.437231e-002, 7.562004e-003, 5.171741e-002, 3.068417e-002, -2.239122e-003, -1.995270e-002, -1.469222e-002, -7.678789e-003, 6.990146e-003, 2.235209e-002, 1.706857e-002, 1.158629e-003, -1.961700e-002},
{7.800444e-002, -8.683145e-003, -2.980677e-002, -7.016262e-003, -4.786632e-003, -1.376608e-002, -8.257110e-003, -2.541424e-004, 5.672497e-004, -1.928290e-003, -3.370086e-003, 7.430573e-004, 9.511213e-003, 2.199540e-002, 3.258580e-002, 3.632790e-002,

© ISO/IEC 2004 — All rights reserved


Copyright International Organization for Standardization
Provided by IHS under license with ISO
No reproduction or networking permitted without license from IHS
Not for Resale

2.773419e-002, 5.406183e-003, -3.220385e-002, -5.306588e-002, -5.262369e-002, -3.795187e-002, -3.486896e-002, -4.825477e-002, -3.261036e-002, 9.693700e-003, 1.848382e-002, 1.898094e-002, 4.747968e-002, 9.091374e-003, -2.211140e-002, 8.069645e-003, 9.541593e-003, -1.182460e-002, -1.889355e-002, 1.003928e-003, 1.552540e-002, 1.523722e-002, 1.149811e-003, -7.014016e-003, -8.980321e-003, -2.358783e-003, 1.552365e-002, 3.716485e-002, 4.733309e-002, 4.228257e-002, 1.820805e-002, -1.153399e-002, -2.901274e-002, -4.536295e-002, -3.141815e-002, -5.364875e-003, 4.877949e-003, -7.992120e-003, 7.938628e-003, 2.523246e-002, 8.903508e-003, 1.533217e-003, -1.964603e-002, 6.527367e-003, 1.300817e-002, -3.158211e-003, -2.131042e-002, -1.396960e-002, 1.425879e-003, 5.766390e-003, 5.500563e-003, -3.399838e-003, -1.202211e-002, -1.885527e-002, -1.296771e-002, 6.356702e-003, 2.456118e-002, 2.564008e-002, 1.659739e-002, -6.290949e-003, -1.258464e-002, -1.428485e-002, -2.252890e-002, -3.198897e-002, -1.577714e-002, 1.027026e-002, 2.283393e-002, 2.032387e-002, 2.194550e-002, 9.298929e-003, -2.106837e-002, -4.555811e-003, 1.053695e-002, -2.465044e-003, -1.897399e-002, -1.809475e-002, -1.695790e-002, -9.218586e-003, -3.035723e-003, 1.544549e-002, 2.479559e-002, 1.142201e-002, -5.213418e-003, -9.784881e-003, 5.154581e-004, 5.715729e-003, 1.464095e-003, -4.941838e-003, -1.058881e-002, -4.088246e-003, 2.934351e-003, 6.974225e-003, -1.201099e-002, -1.394389e-002, -2.872077e-003, 1.930388e-002, 2.835852e-002, 2.658428e-002, 1.362750e-002, -1.192667e-002, -1.654291e-003, 5.567890e-003, -3.482595e-003, -8.973731e-003, -1.272122e-002, -2.702411e-002, -3.033104e-002, -5.539115e-003, 3.475837e-002, 4.826577e-002, 2.977547e-002, 7.978617e-003, -1.296217e-002, -1.704357e-002, -9.946091e-003, -1.188618e-002, -1.335104e-002, -8.863845e-003, 5.669145e-003, 2.086526e-002, 3.485806e-002, 1.644150e-002, -2.232568e-003, -5.536198e-003, 6.438088e-003, 2.377784e-002, 2.235374e-002, 5.380164e-003, -1.047976e-002, -6.330047e-003, 4.226359e-003, 1.818679e-003, 1.151633e-002, -8.373079e-003, -3.874515e-002, -4.226027e-002, 4.877599e-003, 5.926304e-002, 6.255443e-002, 3.399994e-002, 2.869041e-003, -2.421390e-002, -2.600267e-002, -9.299538e-003, -4.587288e-003, -1.383919e-002, -9.715945e-003, 6.841017e-003, 2.880635e-002, 4.380008e-002, 2.926129e-002, -2.046225e-003, -1.066386e-002, -1.294543e-003, 1.058227e-003, 4.726561e-003, -4.240759e-003, -2.204960e-002, 1.104946e-002, -2.930737e-003, 5.318942e-003, 2.472204e-002, -2.555999e-003, -3.594536e-002, -3.129157e-002, 2.916416e-002, 7.856300e-002, 6.932484e-002, 2.587212e-002, -1.134555e-002, -3.771871e-002, -2.921227e-002, -3.843105e-003, 1.167781e-003, -1.560016e-002, -1.993445e-002, -3.816433e-003, 1.777911e-002, 3.454926e-002, 2.735632e-002, -3.006947e-003, -2.414248e-002, -7.206035e-003, 4.006650e-003, -8.844592e-003, -1.153712e-002, -2.820452e-002, 2.700261e-002, -1.251160e-002, 3.042665e-003, 3.285030e-002, 9.365133e-003, -1.603016e-002, -8.844605e-003, 4.122012e-002, 8.247438e-002, 6.321039e-002, 1.506004e-002, -2.760165e-002, -4.105760e-002, -2.817556e-002, -7.824185e-004, 5.338016e-004, -2.276167e-002, -3.567239e-002, -2.327858e-002, -9.574228e-003, 5.084845e-003, 1.063879e-002, -7.020966e-003, -3.224842e-002, -1.539952e-002, 7.637289e-003, 5.272367e-003, -7.831675e-003, -1.434825e-002, 2.879096e-002, -2.073453e-002, 2.051573e-004, 2.844930e-002, 1.724981e-002, -3.208268e-003, 4.226225e-003, 3.670734e-002, 6.607652e-002, 4.680342e-002, -4.955507e-004, -4.217423e-002, -5.581961e-002, -3.644815e-002, -1.768734e-003, 4.135338e-003, -2.277747e-002, -3.441522e-002, -2.560461e-002, -1.574993e-002, -1.261427e-002, -6.179139e-003, -2.220797e-003, -1.736960e-002, -1.094520e-002, 1.343382e-002, 2.349992e-002, 4.903135e-003, 2.316523e-003, 2.699001e-002, -3.522426e-002, -1.052888e-002, 1.604064e-002, 1.779033e-002, 9.886407e-004, 3.525274e-003, 2.549106e-002, 4.779158e-002, 2.439655e-002, -1.837888e-002, -6.040530e-002, -6.561273e-002, -4.129018e-002, -8.324866e-003, 4.522965e-003, -1.730372e-002, -3.020305e-002, -1.411445e-002, -7.475894e-004, 2.292130e-003, 1.635914e-002, 2.572643e-002, 5.439963e-003, -1.908691e-003, 9.385728e-003, 2.134922e-002, 9.398325e-003, 3.081124e-003, 1.690721e-002, -5.086240e-002, -2.437226e-002, 4.329552e-003, -5.215189e-003, -1.567144e-002, -9.288311e-003, 1.305975e-002, 3.602927e-002, 2.189561e-002, -8.621190e-003, -5.370845e-002, -6.252450e-002, -4.375215e-002, -1.901249e-002, -2.090724e-003, -9.455580e-003, -2.165328e-002, -2.488255e-003, 2.061767e-002, 3.511337e-002, 4.961082e-002, 4.340331e-002, 1.869915e-002, -3.346782e-003, -4.788657e-003, 5.616927e-003, -4.424902e-003, -8.479278e-003, 6.993476e-003, -5.303309e-002, -2.786499e-002, -2.259413e-002, -3.624194e-002, -3.200560e-002, -1.393074e-002, 1.295224e-002, 3.622470e-002, 4.059239e-002, 1.177990e-002, -2.935697e-002, -4.795321e-002, -4.482826e-002, -3.075069e-002, -1.210061e-002, -5.952868e-003, -3.059702e-003, 1.085138e-002, 3.659440e-002, 5.324218e-002, 6.069829e-002, 4.418446e-002, 1.451228e-002, -1.820826e-002, -2.505021e-002, -1.427570e-002, -2.187906e-002, -2.859826e-002, 5.405575e-004, -4.025873e-002, -2.363088e-002, -3.074100e-002, -5.239355e-002, -4.327094e-002, -1.523135e-002, 2.034482e-002, 4.721631e-002, 4.938707e-002, 3.045816e-002, -3.697625e-003, -3.348773e-002, -4.487559e-002, -3.650145e-002, -1.816994e-002, -4.923653e-003, 1.376909e-002, 3.119999e-002, 5.341634e-002, 7.088457e-002, 8.114368e-002, 5.800695e-002, 1.863649e-002, -2.665985e-002, -4.154883e-002, -2.676808e-002, -2.608160e-002, -3.181863e-002, -1.989398e-003, -1.472653e-002, -1.637391e-003, -2.261644e-002, -5.487692e-002, -5.106492e-002, -2.019511e-002, 2.319825e-002, 5.112017e-002, 5.217910e-002, 3.398359e-002, 1.150050e-002, -1.599967e-002, -3.845785e-002, -3.709684e-002, -2.700185e-002, -1.432534e-002, 1.405484e-002, 4.335289e-002, 6.214909e-002, 7.406156e-002, 7.964626e-002, 5.299052e-002,


© ISO/IEC 2004 — All rights reserved

Copyright International Organization for Standardization
Provided by IHS under license with ISO
No reproduction or networking permitted without license from IHS
Not for Resale

8.550517e-003, -3.571226e-002, -4.316860e-002, -2.267288e-002, -2.120472e-002, -1.672003e-002, -4.262459e-004, 1.133131e-002, 1.052993e-002, -2.486325e-002, -4.475533e-002, -3.557642e-002, 2.986456e-003, 3.615068e-002, 5.325388e-002, 5.659323e-002, 2.980227e-002, 1.557695e-002, -2.050888e-003, -3.008692e-002, -4.395434e-002, -4.705343e-002, -5.638074e-002, -2.692211e-002, 2.043875e-002, 5.735518e-002, 7.106799e-002, 6.499774e-002, 3.610392e-002, -3.389020e-003, -4.047226e-002, -4.194924e-002, -4.965773e-003, 2.998267e-004, 1.193123e-002, -7.177871e-003, 2.248048e-002, -8.413965e-003, -6.189421e-002, -6.666999e-002, -2.855063e-002, 3.374979e-002, 7.224287e-002, 6.672877e-002, 3.605719e-002, 1.667577e-003, 1.541648e-003, 5.867335e-003, 2.695042e-003, -9.755192e-003, -2.372853e-002, -4.730800e-002, -3.817398e-002, -1.338438e-003, 3.341403e-002, 4.585019e-002, 2.755776e-002, -2.320383e-003, -3.250023e-002, -5.534593e-002, -5.714836e-002, -1.867999e-002, 1.404433e-002, 4.257487e-002, -2.763884e-002, 8.347290e-003, -2.051609e-002, -6.585887e-002, -4.272382e-002, 1.389517e-002, 5.793379e-002, 4.647132e-002, 7.890916e-003, -2.533643e-002, -4.364271e-002, -4.748018e-002, -1.554619e-002, 1.588389e-002, 2.370057e-002, 4.692358e-003, -1.541753e-002, -2.897484e-002, -1.310366e-002, 2.437038e-002, 5.923935e-002, 6.832639e-002, 3.823527e-002, -3.800770e-003, -1.996852e-002, -2.887495e-002, -2.572443e-002, -1.854911e-002, 3.511598e-002, -1.275795e-002, 7.261356e-002, 5.758114e-003, -3.055090e-002, 1.632038e-002, 6.707451e-002, 7.641546e-002, 4.691073e-002, 1.582884e-002, -1.469022e-002, -3.496246e-002, -5.274531e-002, -5.531435e-002, -1.554957e-002, 4.876947e-003, -1.286757e-002, -1.208166e-002, -2.562144e-002, -1.430016e-002, 1.975599e-002, 6.419143e-002, 7.994822e-002, 5.965258e-002, 2.759617e-002, 1.414438e-002, 1.766082e-002, 4.083313e-002, -1.187382e-002, -8.571417e-004, 2.804552e-002, 8.062145e-002, -1.658448e-002, -3.105500e-002, 2.456046e-002, 1.628734e-002, -1.921980e-002, -1.823361e-002, -3.370276e-003, -1.936002e-002, -5.133402e-003, -2.964621e-003, -4.390656e-002, 1.161484e-002, 2.528796e-002, -7.793313e-003, -1.247135e-002, -2.117216e-002, -5.506915e-002, -2.211614e-002, -5.589534e-003, -2.732258e-002, -1.162438e-002, 1.350755e-002, -2.950900e-002, -3.494006e-002, 3.559233e-002, 1.503645e-002, 3.942771e-004, -2.688293e-003, 3.095038e-002, -3.308740e-002, 1.520849e-002, 1.301767e-001, 4.595590e-002, -2.176258e-002, 1.743954e-002, 7.678846e-002, -9.632668e-003, 2.854507e-002, 5.170859e-002, 4.090140e-003, 4.082697e-002, 3.330121e-002, -1.222813e-002, -1.696652e-002, 2.895319e-002, -2.953604e-002, 2.250998e-002, 2.990821e-002, -8.765903e-002, -3.913782e-002, 1.465962e-001, 5.233117e-002, -4.879167e-002, -8.808437e-003, -2.395534e-002, -2.868832e-002, -2.802799e-002, -7.031900e-003, -1.865404e-002, 1.911564e-002, 2.149063e-002, -1.304648e-002, 3.881019e-002, 1.134774e-001, 3.460333e-002, -4.345497e-002, 2.868722e-002, 5.374262e-002, 9.689292e-004, 2.023432e-002, 1.938398e-002, -2.389317e-002, -3.084618e-002, 6.568352e-002, -1.460350e-002, -1.037123e-002, 7.495187e-002, 3.372169e-003, -7.482006e-003, 2.253623e-002, -3.664031e-002, -3.678375e-002, 2.918546e-003, -3.045841e-002, -4.684409e-002, -3.268521e-002, -1.053929e-002, -1.931795e-003, 8.553238e-003, 9.353059e-003, 2.494708e-002, 6.582472e-002, 3.283177e-002, -5.150166e-002, -4.116783e-002, 2.541716e-002, 3.985490e-002, 1.511048e-002, 2.662195e-003, 7.759301e-003, 1.500930e-002, -1.027213e-002, 6.979691e-002, 1.198444e-003, -5.027561e-002, -1.422936e-002, 6.300896e-002, 6.226510e-002, 1.668886e-002, -1.563922e-002, 4.232440e-003, 4.108302e-002, -4.025658e-003, 3.471421e-003, -1.676181e-002, -1.024883e-002, -1.270175e-002, -1.891695e-002, -3.252396e-002, -5.805951e-002, -8.083966e-002, -1.034794e-001, -9.858658e-002, -2.585596e-002, 6.024026e-002, 6.497226e-002, 1.659729e-002, -1.174577e-002, -7.324618e-004, 2.581320e-002, 5.364235e-003, 9.540757e-002, 5.681039e-002, -5.834963e-002, -9.599844e-002, -8.711877e-002, -5.506742e-002, -2.799884e-002, -1.543867e-002, 1.467686e-002, 3.336084e-002, -1.165780e-002, 3.307962e-002, 7.766691e-003, -6.206983e-003, 4.817078e-003, -1.418339e-002, -4.157078e-002, -8.531279e-002, -1.041460e-001, -8.760352e-002, -4.354877e-002, 1.437354e-002, 5.617530e-002, 3.506899e-002, 1.268089e-003, -2.235261e-002, -1.238914e-002, 1.219019e-002, 1.117841e-002, 5.500975e-002, 1.063097e-001, 1.260479e-002, -6.999233e-002, -1.120419e-001, -1.015505e-001, -6.372207e-002, -2.808519e-002, 7.638836e-003, 1.796413e-002, -1.654660e-002, 4.910845e-002, 2.519053e-002, 5.897807e-003, 3.033358e-002, 3.298832e-002, 1.242241e-002, -3.266597e-002, -4.114440e-002, -8.976038e-003, 2.159234e-002, 2.020339e-002, -1.854984e-003, -1.850058e-002, -1.158739e-002, -1.471883e-002, -1.715691e-002, 4.790559e-004, -2.271421e-003, -2.042415e-002, 4.621907e-002, 5.286896e-002, -1.229204e-003, -5.031664e-002, -6.387603e-002, -3.439756e-002, -1.656924e-004, 2.084618e-002, 6.822413e-003, -1.242954e-002, 4.865604e-002, 2.592519e-002, 1.231096e-002, 4.613887e-002, 6.439053e-002, 7.338830e-002, 5.071907e-002, 5.306795e-002, 6.104198e-002, 2.297152e-002, -4.798662e-002, -7.716870e-002, -4.204528e-002, -1.978847e-003, -9.837499e-004, -1.061764e-002, -6.728537e-003, -1.022353e-002, -7.155122e-002, -8.954717e-002, 6.295330e-003, 3.943319e-002, 2.675926e-002, 2.130830e-002, 3.530090e-002, 4.933458e-002, 4.584920e-002, 1.630072e-002, -1.226640e-002, 2.378279e-002, 2.110618e-002, 9.150640e-003, 3.707793e-002, 6.373450e-002, 8.215104e-002, 8.048550e-002, 7.206081e-002, 2.730621e-002, -5.235793e-002, -1.222761e-001, -1.078072e-001, -2.855448e-002, 1.606581e-002, 1.111114e-002, -1.304790e-002, -2.459895e-002, -3.784633e-002, -7.976038e-002, -1.574729e-001, -1.325790e-001, -3.656553e-002, 1.988636e-002, 4.603769e-002, 5.886080e-002, 6.151396e-002, 4.323335e-002, 1.054586e-002, -2.337873e-002, 1.538527e-002},

© ISO/IEC 2004 — All rights reserved


Copyright International Organization for Standardization
Provided by IHS under license with ISO
No reproduction or networking permitted without license from IHS
Not for Resale

{1.861210e-002, -3.530726e-002, -7.197411e-002, -4.714013e-002, -2.345094e-002, -3.686179e-002, -4.467799e-002, -2.549658e-002, 2.740999e-003, 1.945486e-002, 1.986778e-002, 1.051387e-002, -3.423535e-003, -3.243713e-002, -5.349102e-002, -5.624565e-002, -3.913771e-002, -6.822360e-003, 3.620213e-002, 7.156471e-002, 8.328809e-002, 7.719351e-002, 3.213147e-002, -4.599127e-003, -1.389254e-002, -6.645224e-003, -3.342443e-002, -6.253206e-002, -6.194295e-004, 1.985676e-002, -2.465711e-002, -5.039726e-004, 1.343580e-002, -6.720425e-003, -3.420143e-002, -3.216309e-002, -1.464277e-002, -5.968082e-003, -3.587912e-003, -1.522055e-002, -2.393923e-002, -3.563784e-002, -5.055943e-002, -5.969606e-002, -4.593906e-002, -1.940489e-002, 8.676837e-003, 3.547821e-002, 4.418196e-002, 3.746384e-002, 2.797538e-002, 9.577402e-003, -1.467004e-002, -2.690777e-002, -1.979501e-002, 6.700215e-003, -1.199834e-002, -1.985238e-002, 1.757821e-002, 1.737510e-002, 3.306263e-002, 9.400228e-003, 4.015616e-003, 7.738121e-003, 2.817598e-003, -1.178952e-003, -1.174499e-002, -2.401502e-002, -2.660352e-002, -2.438187e-002, -2.621786e-002, -2.294869e-002, -1.310132e-002, 9.494810e-003, 4.938620e-002, 6.930827e-002, 6.346597e-002, 3.901268e-002, 4.126995e-003, -2.670141e-002, -3.488577e-002, -3.246209e-002, -3.148159e-002, -3.204416e-002, 7.311540e-003, 3.347782e-002, 1.143280e-002, 3.235175e-002, 2.750935e-002, -3.972346e-003, -3.984573e-003, 3.550015e-002, 3.636533e-002, 1.629343e-002, -8.302046e-003, -1.384024e-002, -1.530877e-002, -1.253934e-002, -6.338806e-003, -8.867393e-003, -7.452161e-003, 1.015364e-002, 3.679493e-002, 7.370582e-002, 9.370995e-002, 8.272936e-002, 4.631945e-002, 5.964968e-003, -3.638074e-002, -5.555253e-002, -4.917776e-002, -4.324120e-002, -2.758017e-002, -5.892988e-003, 2.190361e-002, 3.765006e-002, 4.393412e-002, -3.887593e-003, -2.454632e-002, 6.351635e-003, 3.098400e-002, 1.626941e-002, -1.290115e-003, 4.955327e-003, 5.339439e-003, 1.101380e-003, -6.357684e-003, -1.586919e-002, -2.093091e-002, -2.023434e-002, -1.488574e-002, 2.067079e-003, 2.712728e-002, 5.823002e-002, 5.965405e-002, 3.198589e-002, 2.752037e-004, -3.714733e-002, -4.033075e-002, -2.456990e-002, -2.742691e-002, -2.137101e-002, -4.797006e-004, 2.548375e-003, 2.059530e-002, 3.321378e-002, -1.260878e-002, 3.192766e-004, 9.661807e-003, -2.125303e-003, -6.211603e-003, 1.119829e-002, 2.319848e-002, 9.730585e-003, -3.515291e-003, -1.353953e-002, -2.611931e-002, -2.113449e-002, -1.357569e-002, -1.059256e-002, -9.219899e-003, 1.454441e-003, 2.568571e-002, 3.190493e-002, 3.803775e-003, -2.504215e-002, -4.772169e-002, -4.006967e-002, -4.916458e-003, 6.168835e-003, -6.263762e-003, 4.230924e-003, -2.029539e-003, -1.163241e-003, 2.220740e-002, 1.333307e-002, 1.528731e-002, 2.403841e-003, 1.095379e-002, 3.241821e-002, 4.356208e-002, 3.155857e-002, 3.802588e-004, -1.848550e-002, -2.765485e-002, -2.815460e-002, -5.702815e-003, 1.220538e-002, 1.059561e-002, 3.863903e-003, 1.595961e-003, 1.560115e-002, 2.262940e-002, -1.818448e-003, -4.251804e-002, -6.626751e-002, -7.052819e-002, -2.324051e-002, 1.590796e-002, 5.924679e-003, -8.486974e-004, -5.239695e-003, -8.423337e-003, 3.109714e-002, 3.039593e-002, 2.030855e-002, 2.494197e-002, 6.404619e-002, 8.030431e-002, 7.176524e-002, 2.893300e-002, -1.448211e-002, -3.145618e-002, -2.831132e-002, -8.991827e-003, 2.568426e-002, 4.617859e-002, 4.111597e-002, 2.098785e-002, 5.043703e-003, 1.352158e-002, 3.151829e-002, 1.589373e-002, -2.403253e-002, -6.009642e-002, -7.684998e-002, -4.831518e-002, -2.420455e-003, 2.343935e-003, -7.767738e-003, -7.392333e-003, -7.327322e-004, 2.661002e-002, 2.050652e-002, 3.219353e-002, 6.189088e-002, 9.522555e-002, 1.004698e-001, 7.719663e-002, 3.053798e-002, -1.156011e-002, -3.337986e-002, -2.685612e-002, 3.448991e-003, 3.475108e-002, 5.667060e-002, 4.796119e-002, 1.655953e-002, -1.811465e-002, -1.315789e-002, 3.616899e-003, 1.410815e-002, -7.559987e-003, -4.284668e-002, -6.419982e-002, -5.670376e-002, -1.608308e-002, -3.272271e-003, -6.097600e-003, -7.032502e-003, 4.047354e-003, -5.631000e-003, -3.674502e-005, 3.277775e-002, 6.392906e-002, 7.502027e-002, 6.939431e-002, 5.152779e-002, 1.916825e-002, -1.767089e-002, -3.806379e-002, -2.593068e-002, 2.649926e-003, 2.152662e-002, 3.521767e-002, 2.053334e-002, -1.241197e-002, -4.540550e-002, -5.269937e-002, -4.361021e-002, -1.840647e-002, -6.629493e-003, -2.505008e-002, -3.716768e-002, -2.722362e-002, -5.638600e-004, 2.186564e-002, 1.137263e-002, 1.645436e-003, 1.781885e-002, -4.299032e-002, -2.419016e-002, 7.589533e-004, 1.075475e-002, 1.630657e-002, 8.822704e-003, 1.058410e-004, -1.206535e-002, -2.620444e-002, -3.702058e-002, -2.371656e-002, -8.221795e-003, -3.671097e-003, 1.880846e-003, -1.208234e-002, -3.184811e-002, -5.266925e-002, -6.175641e-002, -5.278792e-002, -3.577885e-002, -7.509169e-003, -1.625834e-003, -9.942789e-003, -2.155356e-004, 2.687194e-002, 4.768080e-002, 4.005070e-002, 2.703294e-002, 4.550031e-002, -7.034617e-002, -5.077646e-002, -5.176833e-002, -6.290698e-002, -6.284864e-002, -5.774484e-002, -4.510914e-002, -3.345278e-002, -2.251913e-002, -1.946624e-002, -1.172010e-002, -1.842617e-002, -1.759705e-002, -1.968891e-002, -2.141449e-002, -2.068138e-002, -1.620230e-002, -1.977446e-002, -6.086000e-003, 2.440248e-003, 1.812370e-002, 2.614099e-002, 1.493694e-002, 1.048662e-002, 3.387050e-002, 5.518197e-002, 4.637790e-002, 3.802070e-002, 6.431679e-002, -7.086206e-002, -5.735188e-002, -8.179056e-002, -9.919541e-002, -8.808131e-002, -6.144797e-002, -3.163476e-002, -1.575082e-004, 1.451960e-002, 1.265701e-002, 1.287505e-004, -2.069663e-002, -2.322122e-002, -1.835417e-002, -1.185991e-002, 1.024232e-002, 3.569902e-002, 4.891072e-002, 6.255092e-002, 7.269541e-002, 7.081418e-002, 6.018325e-002, 3.803573e-002, 1.157805e-002, 7.985330e-003, 2.758473e-002, 2.820306e-002, 2.255439e-002, 5.337973e-002, -4.312017e-002, -2.861807e-002, -5.745878e-002, -5.888692e-002, -3.620374e-002, -3.768569e-003, 1.692502e-002,


© ISO/IEC 2004 — All rights reserved

Copyright International Organization for Standardization
Provided by IHS under license with ISO
No reproduction or networking permitted without license from IHS
Not for Resale

3.037747e-002, 3.368380e-002, 2.244538e-002, -7.190314e-003, -3.183931e-002, -2.648087e-002, -1.457157e-002, -2.943036e-003, 2.009871e-002, 5.069715e-002, 5.862131e-002, 6.207142e-002, 5.668163e-002, 4.339302e-002, 2.646077e-002, 1.289354e-002, -3.583941e-003, -1.540638e-002, -2.130274e-002, -2.173965e-002, -1.930943e-002, 1.395769e-002, 1.313163e-003, 3.084420e-002, 5.455246e-003, -1.110021e-002, -8.069580e-003, 1.204042e-002, 1.147808e-002, 7.472041e-003, 1.035371e-002, -4.797523e-003, -3.095392e-002, -5.091320e-002, -4.784018e-002, -3.769862e-002, -3.270915e-002, -1.839467e-002, -3.844833e-003, -1.989721e-002, -2.023896e-002, -1.543406e-002, -4.947507e-003, 1.184434e-002, 1.373602e-002, -7.983481e-004, -8.777753e-003, -1.488573e-002, -4.130060e-002, -5.292366e-002, -3.374096e-002, 3.937861e-002, 6.362884e-002, 1.550028e-002, -2.511699e-002, -1.430694e-002, 4.586586e-003, 5.737549e-003, -5.640845e-003, -1.996096e-003, 2.776275e-003, 3.882109e-003, -1.027004e-002, -2.778248e-002, -3.200746e-002, -3.846578e-002, -3.430161e-002, -2.689964e-002, -1.827683e-002, 3.051886e-002, 8.575998e-002, 9.788507e-002, 7.150749e-002, 1.603992e-002, -1.872753e-002, -1.055480e-002, 2.058374e-002, 2.495243e-002, -2.200082e-002, -5.704255e-002, 5.679997e-002, 6.359863e-002, -1.692146e-003, -1.088924e-002, 1.868488e-002, 3.824173e-002, 4.353713e-002, 2.687660e-002, 2.016716e-002, 4.338778e-003, 5.811998e-003, 3.768903e-002, 4.543349e-002, 3.280503e-002, 8.053452e-003, -1.068259e-003, -2.315272e-003, -7.116524e-003, 5.818550e-003, -6.733512e-004, -3.236413e-003, -1.895933e-002, -3.346069e-002, -2.636428e-002, -1.239144e-002, 2.623211e-002, 7.938654e-002, 6.243836e-002, -2.502785e-002, 2.359874e-002, 1.080743e-002, -2.784966e-002, -2.333456e-002, -9.713082e-003, -1.645701e-002, -5.142718e-003, 2.470624e-002, 4.947366e-002, 2.968953e-002, -7.010276e-003, 1.178951e-002, 7.758044e-002, 7.904641e-002, 4.032928e-002, 2.450408e-002, 1.690082e-002, -2.548373e-002, -5.378215e-002, -2.827125e-002, 2.709942e-002, 4.923074e-002, 3.137989e-002, 1.548934e-002, -3.929364e-003, -1.805215e-002, 1.463473e-002, 5.531791e-002, -2.399961e-003, -7.604250e-002, -5.604994e-002, -2.147520e-002, -5.580946e-003, -1.736058e-002, -4.867553e-002, -3.993186e-002, -1.475875e-003, 1.587219e-002, 3.308726e-002, -2.029508e-002, -4.266492e-002, 1.270892e-002, 7.473912e-003, -1.258285e-002, 9.871803e-003, 3.135703e-002, -4.251076e-002, -4.370690e-002, -1.483909e-002, 1.249490e-002, 6.172172e-003, -2.882255e-002, -2.877213e-002, -7.300891e-003, -2.809088e-002, -4.418573e-002, -3.027048e-002, -3.929470e-002, -7.028393e-002, -3.240482e-002, 1.494094e-002, 7.606641e-002, 7.206789e-002, -1.580595e-002, -3.032492e-002, 1.003154e-002, -6.944484e-002, -1.794283e-002, -1.487941e-002, -5.686426e-002, -1.646945e-002, -5.203170e-002, -7.654451e-002, -2.266495e-002, 6.167055e-002, -3.113305e-002, -3.909699e-002, -5.275182e-002, -2.135191e-002, 1.759179e-002, -5.781984e-003, -3.453804e-002, -1.946977e-002, -1.611305e-002, -4.676826e-002, -4.740901e-002, -6.605510e-002, -3.467680e-002, -4.080057e-002, -4.354978e-002, -1.515854e-002, 3.225198e-002, 2.182552e-003, -8.120098e-003, 1.082743e-003, -3.997459e-002, -7.523945e-003, 3.143579e-002, -1.310544e-002, 1.799029e-002, -2.082594e-002, -4.616455e-002, -2.071085e-002, 4.796319e-002, -6.559020e-003, -1.899388e-002, -2.798878e-002, -2.827630e-002, 1.324119e-002, 1.421965e-002, 1.377153e-003, -2.564673e-002, -4.160689e-002, -5.800568e-002, -4.272003e-002, -6.103524e-002, 3.104210e-003, -1.617253e-002, -7.625222e-002, -7.641640e-002, -2.044887e-002, 1.277493e-002, 7.618879e-003, 2.637460e-002, 4.517435e-002, 3.412484e-002, 2.175919e-002, 1.596567e-002, 2.406049e-002, 1.706641e-002, 1.210767e-002, 6.491743e-004, 1.240126e-002, 1.222572e-002, 1.213923e-002, 3.942200e-002, 4.353502e-002, 2.541048e-002, 3.780014e-002, 3.932959e-002, -1.244522e-002, -7.177076e-002, -5.798945e-002, -1.413114e-002, -3.003467e-002, 5.595618e-002, 5.719136e-002, -1.497795e-002, -2.928364e-002, 6.233479e-003, 3.161439e-002, 4.325659e-002, 3.951290e-002, 1.822606e-002, -7.302847e-003, -3.224855e-002, -7.358722e-003, 7.522795e-003, 3.973847e-002, 3.021648e-002, 3.938370e-003, -2.430726e-002, -3.798508e-002, -9.130107e-003, 3.509666e-002, 7.831956e-002, 1.020624e-001, 1.161752e-001, 1.030245e-001, 4.898856e-002, -7.736121e-003, -5.464776e-003, 2.912799e-002, -1.079259e-002, 6.011163e-002, 1.104715e-001, 4.625833e-002, 8.143333e-003, 1.396845e-003, -1.350286e-002, -3.063611e-002, -4.716948e-002, -5.777312e-002, -7.534730e-002, -7.155569e-002, -3.058883e-002, -1.109717e-002, 3.957513e-002, 8.373627e-003, -5.861870e-003, -2.947140e-002, -7.170823e-002, -6.885651e-002, -3.325373e-002, -4.648702e-003, 2.682949e-002, 5.166168e-002, 6.269096e-002, 4.200001e-002, 2.996099e-002, 4.122287e-002, 6.779488e-002, 1.461008e-002, 2.597267e-002, 9.930415e-002, 8.063550e-002, 3.855133e-002, 1.762880e-002, -1.247947e-002, -3.941479e-002, -6.161150e-002, -7.091715e-002, -7.933514e-002, -5.477991e-002, -5.196167e-002, -1.008915e-002, 1.780162e-002, -1.744022e-002, -3.278145e-002, -2.657904e-002, -4.468605e-002, -5.775157e-002, -4.595223e-002, -3.150070e-002, -5.324316e-003, 2.047837e-002, 3.787670e-002, 3.667364e-002, 3.439174e-002, 6.047824e-002, 7.185851e-002, 3.468806e-002, -1.565149e-002, 3.728167e-002, 5.787413e-002, 5.998358e-002, 3.989911e-002, 1.489080e-002, -6.002300e-003, -2.116512e-002, -1.698668e-002, -1.557801e-002, -1.474801e-002, -3.569528e-002, 9.828492e-003, 1.888033e-002, -2.715690e-002, -5.659007e-002, -3.234145e-002, -7.894813e-003, -9.184902e-003, -1.545294e-002, -1.318903e-002, -9.007382e-003, 7.848105e-003, 2.226025e-002, 2.486053e-002, 1.070678e-002, 2.094011e-002, 3.862950e-002, 4.451282e-002, -5.414350e-002, -3.072654e-002, -7.182999e-003, 1.271194e-002, 1.046573e-002, 1.113532e-002, 8.020552e-003, 1.638274e-002, 2.410248e-002, 2.873756e-002, 4.920207e-003, 7.128332e-003, 4.305229e-002, 4.459049e-002,

© ISO/IEC 2004 — All rights reserved


Copyright International Organization for Standardization
Provided by IHS under license with ISO
No reproduction or networking permitted without license from IHS
Not for Resale

1.922235e-003, -4.283284e-002, -3.079263e-002, 5.261903e-003, 2.230487e-002, 1.708099e-002, -6.010582e-003, -2.829759e-002, -3.415375e-002, -3.691899e-002, -4.467587e-002, -5.776359e-002, -3.090217e-002, 1.763857e-002, 4.832286e-002},
{2.876792e-002, 2.415751e-002, 2.449103e-002, -2.876717e-003, -1.583433e-002, -2.198453e-003, 3.729911e-002, 7.331281e-002, 7.328046e-002, 3.496967e-002, -6.803966e-003, -2.908125e-002, -5.979783e-002, -7.197397e-002, -7.802418e-002, -7.434122e-002, -5.857882e-002, -2.809862e-002, 1.127060e-002, 4.183638e-002, 3.321916e-002, 1.303054e-003, -2.316607e-002, -2.719325e-002, -2.737644e-002, -3.546193e-002, -3.294696e-002, -1.527668e-002, -6.814875e-003, 1.995509e-002, 1.290942e-002, 4.464828e-003, -9.235864e-003, -1.076427e-003, 2.043074e-002, 5.205396e-002, 7.481170e-002, 6.661809e-002, 3.260076e-002, -2.190692e-003, -1.596428e-002, -3.168067e-002, -3.536609e-002, -4.432901e-002, -5.613113e-002, -5.335646e-002, -3.540743e-002, -2.457455e-003, 3.532566e-002, 5.596294e-002, 4.046782e-002, 1.161099e-002, -8.609612e-003, -1.692475e-003, 6.038620e-003, 8.312383e-003, 6.308267e-003, 2.048348e-002, -2.730398e-002, -1.797283e-002, -3.654918e-003, -7.780955e-003, -2.333225e-002, -1.039917e-002, 3.257595e-002, 5.826571e-002, 5.112690e-002, 2.291881e-002, 7.549241e-003, 5.102687e-003, 1.343283e-002, 1.076188e-002, -4.249495e-003, -2.304899e-002, -3.333216e-002, -2.465660e-002, -1.255719e-002, -6.936106e-004, 1.964056e-002, 2.701928e-002, 5.479546e-003, -1.589638e-002, -1.155815e-002, 1.740423e-002, 2.748640e-002, 1.679676e-002, 3.084839e-002, -4.758447e-002, -3.027916e-003, 1.115404e-002, -2.218447e-002, -3.885946e-002, -1.359236e-002, 2.333032e-002, 3.990158e-002, 3.071753e-002, 4.923808e-003, -4.981751e-003, 3.030110e-003, 1.822808e-002, 2.336606e-002, 2.242569e-002, 1.112977e-002, 1.777734e-003, 6.908272e-003, 9.370809e-003, 1.127761e-003, -1.046565e-003, 2.202063e-003, -5.341933e-003, -2.642949e-002, -3.642545e-002, 3.639771e-004, 3.195061e-002, 1.292474e-002, 1.404710e-002, -2.149966e-002, 2.491790e-002, 8.397091e-003, -1.723032e-002, -1.336868e-002, 3.093271e-003, 1.600721e-002, 1.864621e-002, -1.764912e-003, -3.098136e-002, -3.846655e-002, -3.182481e-002, -1.079737e-002, 9.765563e-003, 2.626904e-002, 3.703297e-002, 4.644691e-002, 5.999227e-002, 5.601188e-002, 3.131474e-002, 4.145127e-003, -1.748227e-002, -1.952402e-002, -2.132031e-002, -3.942843e-002, -3.349028e-002, 1.288539e-002, 3.184432e-003, -1.342924e-002, -8.400444e-003, 3.620259e-002, 5.400719e-003, 1.138731e-003, 1.972640e-002, 3.115174e-002, 2.681351e-002, 1.164689e-002, -1.020645e-002, -3.178982e-002, -4.732191e-002, -4.794285e-002, -3.100693e-002, -4.553316e-003, 2.697910e-002, 4.523465e-002, 5.443304e-002, 6.689655e-002, 6.912593e-002, 4.313290e-002, 3.139059e-003, -3.714586e-002, -4.329271e-002, -3.165520e-002, -2.279827e-002, -3.599191e-002, -7.482408e-003, 7.557972e-003, -3.052049e-002, -5.950560e-003, 1.483482e-002, 3.866305e-003, 1.349691e-002, 2.973986e-002, 2.030008e-002, 1.640798e-002, 1.155760e-002, -3.324133e-003, -2.574189e-002, -4.072656e-002, -3.922161e-002, -2.205906e-002, -2.273487e-003, 3.019998e-002, 4.122083e-002, 4.105494e-002, 4.656307e-002, 4.474781e-002, 3.012199e-002, -6.741302e-003, -4.822080e-002, -7.132154e-002, -5.703406e-002, -2.311685e-002, -1.395050e-002, -8.327411e-003, 1.571197e-002, -9.611202e-003, -3.117523e-002, -9.479964e-003, 1.226229e-003, 1.056036e-002, -6.124965e-003, -2.106708e-002, -1.583721e-002, -4.325993e-003, -1.283063e-002, -3.410314e-002, -4.770683e-002, -4.763181e-002, -2.720817e-002, -2.213749e-003, 3.123346e-002, 3.328579e-002, 2.066419e-002, 1.402123e-002, 1.824866e-002, 1.443542e-002, -4.655300e-003, -2.905877e-002, -5.803529e-002, -6.063922e-002, -2.600410e-002, 1.477732e-003, 1.369539e-002, 1.952953e-002, 9.873072e-003, -5.196379e-002, -1.476233e-002, -7.852541e-003, -1.591339e-002, -5.396831e-002, -5.281293e-002, -2.653770e-002, -3.837436e-003, -4.275071e-003, -2.798184e-002, -4.556308e-002, -4.716806e-002, -2.437425e-002, 3.363074e-003, 2.396002e-002, 1.536524e-002, -1.688767e-002, -3.244108e-002, -2.538590e-002, -2.712622e-003, 8.482183e-003, 8.521153e-003, -2.800642e-003, -1.870314e-002, -1.260773e-002, 1.078829e-002, 3.122913e-002, 2.574196e-002, 1.487370e-002, -5.507091e-002, -1.283203e-002, -2.568429e-002, -5.049237e-002, -7.490607e-002, -5.235840e-002, -1.055244e-002, 2.332785e-002, 2.652903e-002, 8.149321e-003, -1.584299e-002, -2.924472e-002, -1.527479e-002, 1.519629e-002, 2.716385e-002, 1.009593e-002, -3.837349e-002, -6.883822e-002, -7.600575e-002, -4.094094e-002, 3.783705e-003, 3.609885e-002, 5.102460e-002, 4.626689e-002, 2.858124e-002, 3.164729e-002, 4.283817e-002, 3.467215e-002, 1.274531e-002, -2.921410e-002, -2.730536e-003, -4.139317e-002, -7.635877e-002, -8.022421e-002, -3.324856e-002, 2.288496e-002, 5.979016e-002, 7.362207e-002, 6.534329e-002, 3.891680e-002, 1.200211e-002, 1.506599e-002, 3.656548e-002, 4.494270e-002, 1.848294e-002, -3.199369e-002, -8.214929e-002, -9.985908e-002, -7.391742e-002, -2.351902e-002, 2.596300e-002, 5.869698e-002, 7.385229e-002, 6.260109e-002, 4.272280e-002, 5.064249e-002, 4.599247e-002, 1.086550e-002, -9.429661e-004, 1.647943e-003, -5.605386e-002, -8.518291e-002, -6.446785e-002, 4.640477e-006, 6.023009e-002, 1.032116e-001, 1.231706e-001, 1.086221e-001, 7.634327e-002, 4.051826e-002, 2.690522e-002, 3.943008e-002, 4.448929e-002, 2.575479e-002, -1.172114e-002, -5.837388e-002, -7.642241e-002, -6.268221e-002, -3.042529e-002, 1.572616e-002, 4.689140e-002, 5.935457e-002, 5.412951e-002, 3.359884e-002, 2.711056e-002, 2.627807e-002, -1.762549e-003, 2.020383e-002, -7.376309e-003, -6.276227e-002, -6.913412e-002, -3.245440e-002, 1.960348e-002, 6.810475e-002, 1.003326e-001, 1.144746e-001, 9.508530e-002, 5.621377e-002, 2.130529e-002, 6.893660e-003, 1.732761e-002, 2.299832e-002, 1.507971e-002, -2.261817e-003, -2.411458e-002, -4.316365e-002, -4.286382e-002, -


© ISO/IEC 2004 — All rights reserved

Copyright International Organization for Standardization
Provided by IHS under license with ISO
No reproduction or networking permitted without license from IHS
Not for Resale

2.415254e-002, 8.396212e-003, 3.357542e-002, 3.520895e-002, 2.553998e-002, -7.220759e-004, -1.720336e-002, -1.173636e-002, -2.550274e-002, 2.866856e-002, -5.686656e-003, -3.433488e-002, -1.622497e-002, 2.003091e-003, 1.043114e-002, 2.689195e-002, 3.664581e-002, 4.002471e-002, 2.329840e-002, -6.153615e-003, -3.371841e-002, -4.209665e-002, -2.851992e-002, -1.654224e-002, -1.449101e-002, -2.202993e-002, -2.245075e-002, -3.011678e-002, -3.448129e-002, -2.582859e-002, 2.584117e-003, 3.381115e-002, 5.211922e-002, 4.393074e-002, 5.298229e-003, -3.991069e-002, -5.030958e-002, -4.737179e-002, 2.482237e-002, 1.174467e-002, 2.952503e-002, 4.689818e-002, 3.553753e-002, 2.159352e-002, 2.191238e-002, 2.261205e-002, 2.282796e-002, 5.423740e-003, -3.286016e-002, -6.796521e-002, -7.913538e-002, -7.022776e-002, -6.049730e-002, -5.631321e-002, -4.711616e-002, -2.179177e-002, -5.900273e-003, 6.190397e-003, 6.174995e-003, 1.457046e-002, 2.723667e-002, 4.214692e-002, 4.835212e-002, 3.481768e-002, -8.657551e-003, -4.308583e-002, -5.512297e-002, 7.101172e-004, 2.468263e-002, 4.762228e-002, 2.822844e-002, 1.247276e-002, 2.168817e-002, 2.679538e-002, 2.330347e-002, 2.381015e-002, 3.448062e-002, 2.736245e-002, -1.724892e-002, -4.573547e-002, -5.021811e-002, -5.711502e-002, -5.614525e-002, -3.550618e-002, -7.394322e-003, 1.604801e-002, 2.933106e-002, 2.497225e-002, 5.479241e-003, -1.805774e-002, -3.586885e-002, -5.133176e-002, -5.547116e-002, -2.708350e-002, -1.819457e-002, -3.494572e-002, -1.017135e-002, 1.372230e-002, -1.304420e-002, -2.468266e-002, 3.288652e-003, 2.908018e-002, 3.480284e-002, 2.505901e-002, 7.233096e-004, -3.032827e-002, -3.749026e-002, -2.273080e-002, -1.605013e-002, -1.773932e-002, -2.288470e-002, -3.219937e-002, -2.365212e-002, -1.887577e-002, -2.360913e-002, -1.270773e-002, 1.355410e-002, 2.736586e-002, 1.377343e-002, 1.945001e-003, -2.586548e-002, -6.862288e-002, -6.983361e-002, -1.478489e-002, 7.537459e-003, -1.184581e-002, 6.004773e-003, -1.784667e-002, -2.681337e-002, -2.828814e-002, -4.809568e-002, -4.371112e-002, -1.487730e-002, 1.684622e-002, 9.863276e-003, -1.731099e-002, -1.724626e-002, -2.069043e-002, -3.215192e-002, -3.853652e-002, -2.616340e-002, 1.427289e-002, 1.261006e-002, -6.615059e-003, 6.574896e-003, -1.769952e-003, -1.758478e-002, -3.612404e-002, -4.916743e-002, -4.050319e-002, -3.304226e-002, -3.703546e-002, -4.465330e-003, 4.161169e-002, -5.019742e-003, 1.639634e-002, 1.948686e-003, -3.348251e-002, -6.046136e-002, -8.437627e-002, -5.186719e-002, -3.657073e-003, 1.068876e-002, 4.669189e-002, 7.339851e-002, 7.071119e-002, 1.161679e-002, -5.206399e-002, -7.145978e-002, -1.523157e-002, 8.236134e-002, 7.757115e-002, 6.914753e-002, 7.365724e-002, 5.165335e-002, 6.311543e-002, 4.245078e-002, -1.898217e-002, -6.173032e-002, -5.195302e-002, -2.783461e-002, 5.397129e-004, 3.743656e-002, 1.456372e-002, 1.914783e-002, 2.290368e-003, -3.998311e-003, -1.808930e-002, -7.559244e-002, 1.707409e-003, 4.487288e-002, -3.722405e-002, -3.546962e-002, 3.995307e-002, 1.026938e-001, 9.922501e-002, 4.809794e-002, 3.149544e-003, 5.295095e-002, 1.209099e-001, 5.670873e-002, 4.274990e-002, 2.211993e-002, -3.035023e-002, 2.982549e-002, 8.046766e-002, 6.132676e-002, -3.671083e-002, -5.407110e-002, -2.130714e-002, -4.127610e-005, 1.498719e-002, 2.008922e-002, -2.838653e-003, -7.242834e-005, 3.329725e-002, 9.046766e-002, -1.814924e-002, -5.511552e-002, -2.854472e-002, -4.688294e-002, -7.307874e-002, -7.186836e-003, 3.221833e-002, 8.482984e-002, 7.676428e-002, 2.660526e-002, 1.787811e-002, 5.649347e-002, -3.321173e-002, -5.206558e-002, 8.500611e-003, 3.327521e-002, -3.409310e-002, -2.249846e-003, 5.994800e-002, 5.978227e-002, 3.023996e-002, 5.158434e-003, 2.677972e-002, -1.092417e-002, 1.466337e-002, -6.975929e-003, 2.255922e-003, 8.134943e-003, 2.274135e-002, 1.393865e-002, -1.799996e-002, -2.383071e-002, -3.236934e-002, -3.708867e-002, -3.730021e-002, -2.112371e-002, 1.413413e-002, 3.835419e-002, 1.364663e-002, -2.294922e-002, -1.412545e-002, -6.564624e-002, -8.737507e-002, -2.842372e-002, 1.311575e-002, -1.258663e-002, -6.580148e-003, 2.557520e-002, 1.940980e-002, 2.155772e-002, 2.140472e-002, 4.200216e-002, -1.362725e-002, -2.562939e-004, -5.066072e-003, -9.658629e-003, -1.039808e-002, 1.688316e-002, 3.984283e-002, 4.725360e-002, 3.703160e-002, 1.378393e-002, -2.363721e-002, -6.704473e-002, -7.824864e-002, -2.306755e-002, 2.119426e-002, 4.596086e-003, -2.222191e-002, -5.456230e-002, -7.694139e-002, -9.157208e-002, -3.307283e-002, 1.602423e-002, 3.334971e-002, 3.142406e-002, 1.396577e-002, -1.999332e-002, -2.453178e-002, 1.475014e-002, 3.840765e-002, -1.205095e-002, -2.003590e-003, 1.635663e-002, -1.181269e-002, -2.366982e-002, 8.424212e-004, 3.749737e-002, 4.789476e-002, 3.324024e-002, 4.013171e-004, -4.200894e-002, -7.198017e-002, -6.548097e-002, -1.217638e-002, 1.265473e-002, 2.945940e-003, -1.764234e-003, -3.513223e-002, -5.605161e-002, -6.573617e-002, -3.916476e-002, -1.768752e-003, 2.337764e-002, 2.870861e-002, 1.650642e-002, -1.661074e-002, -3.348175e-002, 1.204719e-002, 3.891310e-002, -1.467556e-002, -9.449244e-003, 3.548294e-002, 8.162375e-003, -2.511083e-002, -1.183523e-002, 1.844825e-002, 2.413120e-002, 1.325828e-002, -6.937937e-003, -2.283071e-002, -2.901610e-002, -2.727115e-002, 4.151969e-003, 5.801863e-003, -2.870127e-003, 1.302490e-002, 7.907648e-003, -2.241140e-002, -2.584173e-002, -1.464240e-002, -1.216731e-003, 2.537171e-002, 3.697772e-002, 2.862154e-002, 9.249716e-004, -1.134145e-002, 1.603295e-002, 3.327886e-002, -8.620021e-003, -1.837535e-002, 4.407959e-002, 3.315862e-002, -8.214966e-003, -9.632101e-003, 6.683667e-003, 8.864650e-003, 1.047672e-002, 1.056651e-002, 2.138403e-002, -1.834681e-003, -1.140220e-002, -4.497811e-003, -1.278107e-002, -1.629149e-002, 6.460992e-004, 2.803379e-002, 7.308101e-003, -1.836210e-004, 1.477862e-002, 1.298421e-002, 2.023284e-002, 2.747113e-002, 1.894606e-002, 3.190432e-003, -3.105570e-003, 8.756442e-003,

© ISO/IEC 2004 — All rights reserved


Copyright International Organization for Standardization
Provided by IHS under license with ISO
No reproduction or networking permitted without license from IHS
Not for Resale

1.564418e-002, -3.625153e-003, -2.120172e-002, 3.498593e-002, 3.479570e-002, 1.950347e-003, -8.769191e-003, -3.348353e-003, 4.392945e-004, 1.156000e-002, 1.989245e-002, 1.631939e-002, -1.281022e-002, -2.628403e-002, -3.608680e-002, -3.683608e-002, -2.178193e-002, -4.791268e-004, 2.534669e-002, 1.539261e-002, 1.303489e-002, 2.155295e-002, 1.269684e-002, 1.746193e-002, 1.390838e-002, 6.782491e-004, -1.578357e-002, -2.528202e-002, -2.144467e-002, -3.058156e-003, -5.387896e-003},
{1.798078e-002, 2.277494e-003, -9.669137e-003, -2.310879e-002, -4.281296e-002, -3.257321e-002, -1.075602e-003, 2.080293e-002, 1.662283e-002, -6.962006e-003, -1.780209e-002, -1.482197e-002, -9.410148e-003, 5.626998e-003, 3.176275e-002, 4.051069e-002, 3.746315e-002, 3.604755e-002, 3.325078e-002, 1.515754e-002, -3.175400e-003, -6.754052e-003, -3.922969e-003, 5.552121e-003, 1.826273e-003, -2.077907e-002, -3.097293e-002, -1.654475e-002, -2.138099e-003, 2.736265e-002, 1.983317e-002, 1.863734e-002, -6.453328e-003, -1.668286e-002, 1.361636e-002, 4.341862e-002, 4.027618e-002, 1.961570e-002, -4.142128e-003, -1.332177e-002, -1.247135e-002, -5.509190e-003, 9.774741e-003, 3.734035e-002, 4.618104e-002, 4.266977e-002, 4.364659e-002, 3.429455e-002, 1.546523e-002, -2.758807e-003, -7.637297e-003, -6.123011e-003, -8.782096e-003, 1.415692e-002, 1.042600e-002, -9.381214e-003, -7.952142e-004, 2.704755e-002, 1.545297e-002, 1.338225e-002, -7.642894e-004, -2.587684e-002, -3.026796e-002, -4.469231e-003, 1.954963e-002, 1.956883e-002, 4.660202e-003, -1.035479e-002, -1.578784e-002, -2.155197e-002, -2.124955e-002, -1.651929e-002, 1.921581e-003, 1.537554e-002, 2.679597e-002, 3.082750e-002, 2.240686e-002, -1.045754e-002, -3.503321e-002, -4.202970e-002, -2.260371e-002, -1.815569e-002, -1.881738e-002, 1.152631e-002, 2.183697e-002, 4.752321e-003, 2.063194e-002, 1.429763e-003, 1.162902e-002, 3.250883e-003, -4.075575e-002, -4.847469e-002, -3.140840e-002, 5.879767e-003, 2.860615e-002, 2.530207e-002, 3.241723e-003, -1.502580e-002, -3.885953e-002, -5.435175e-002, -5.629422e-002, -3.539038e-002, -4.005878e-003, 1.975090e-002, 4.796835e-002, 4.914759e-002, 1.906789e-002, -2.023886e-002, -4.484489e-002, -3.836052e-002, -1.832164e-002, -1.981822e-002, -1.024745e-002, 1.996411e-002, 1.436394e-002, 7.384364e-003, -5.148681e-003, 2.823861e-002, 5.949934e-003, -4.648347e-002, -5.940721e-002, -3.300934e-002, 1.550676e-002, 4.749348e-002, 2.466539e-002, -1.168511e-002, -3.641842e-002, -7.556011e-002, -1.019705e-001, -9.424432e-002, -6.646401e-002, -1.793509e-002, 1.776396e-002, 6.074652e-002, 7.130594e-002, 4.122340e-002, 1.664884e-003, -3.519094e-002, -3.514334e-002, -6.898374e-003, -5.881639e-006, -1.588623e-002, -2.562620e-003, 4.153673e-003, -5.598961e-004, 3.881754e-003, 4.223290e-002, 9.246721e-003, -3.168774e-002, -3.797687e-002, -1.529710e-002, 2.711890e-002, 5.730469e-002, 2.791862e-002, -6.651607e-003, -3.372840e-002, -7.203700e-002, -1.029959e-001, -1.039557e-001, -8.110945e-002, -2.976371e-002, -7.592586e-004, 3.533044e-002, 5.780143e-002, 3.471345e-002, -4.678801e-003, -3.055053e-002, -3.287677e-002, -5.898276e-003, 2.261724e-002, 9.511109e-003, -3.999091e-003, 3.719883e-003, -5.778656e-003, 1.525578e-002, 4.423940e-002, 2.563482e-002, -7.782285e-003, -2.220992e-002, -7.693020e-003, 3.887027e-002, 7.405511e-002, 4.836964e-002, 2.270414e-002, 1.964242e-002, -6.327261e-003, -3.108197e-002, -4.298379e-002, -3.798826e-002, -1.499161e-002, 2.216537e-003, 1.537400e-002, 3.367776e-002, 2.777269e-002, -1.452178e-002, -3.972663e-002, -4.825154e-002, -1.961442e-002, 1.904257e-002, 3.328437e-002, -2.543920e-003, -9.062346e-004, 6.779182e-003, 8.585358e-003, 4.348926e-002, 5.110285e-002, 5.310191e-003, -1.997260e-002, -8.154747e-003, 3.641540e-002, 6.864224e-002, 5.613412e-002, 5.096170e-002, 6.655409e-002, 6.339322e-002, 5.170099e-002, 3.906961e-002, 2.326479e-002, 1.027416e-002, -1.728704e-003, -4.908657e-003, 1.199625e-002, 2.574294e-002, 1.997650e-003, -2.465365e-002, -4.091235e-002, -2.181107e-002, 2.058312e-002, 3.369850e-002, 5.644549e-003, -1.262291e-002, 1.026316e-002, -1.249349e-002, 3.948892e-002, 4.606903e-002, -5.483804e-003, -3.424639e-002, -1.673472e-002, 2.369179e-002, 4.132024e-002, 2.431931e-002, 3.328286e-002, 6.875993e-002, 9.560893e-002, 9.601780e-002, 8.915532e-002, 6.473703e-002, 1.126766e-002, -2.898848e-002, -4.055782e-002, -2.581441e-002, 1.601412e-002, 2.410953e-002, -3.326769e-003, -2.474480e-002, -1.658863e-002, 1.514280e-002, 2.505518e-002, 9.419727e-003, -1.854064e-002, 2.818586e-003, -4.352452e-002, 2.806263e-002, 1.934419e-002, -2.772053e-002, -5.516069e-002, -3.076781e-002, 6.225558e-003, 9.357060e-003, -1.281775e-002, -9.074912e-003, 2.777957e-002, 7.311705e-002, 8.700902e-002, 8.572279e-002, 5.666698e-002, -3.843448e-003, -6.786983e-002, -8.648600e-002, -7.210741e-002, -1.738041e-002, 2.065982e-002, 2.440463e-002, 8.129498e-003, 9.085565e-003, 2.141493e-002, 2.850405e-002, 1.220086e-002, -1.821002e-002, 7.733251e-003, -5.304982e-002, 8.068879e-003, 8.402185e-004, -3.709754e-002, -6.199915e-002, -3.568999e-002, -8.114130e-003, -1.058270e-002, -3.942747e-002, -5.561119e-002, -2.693662e-002, 2.653068e-002, 5.038743e-002, 5.405804e-002, 2.896933e-002, -2.273249e-002, -9.380591e-002, -1.130584e-001, -8.698678e-002, -4.224864e-002, 1.218868e-002, 3.768006e-002, 3.162665e-002, 2.595600e-002, 2.942940e-002, 2.844449e-002, 1.317030e-002, -1.066958e-002, 1.273684e-002, -4.636343e-002, 1.606466e-002, 6.745332e-003, -3.130372e-002, -4.284505e-002, -7.140984e-003, 1.410994e-002, 1.006370e-002, -3.323172e-002, -7.428020e-002, -7.339915e-002, -2.983576e-002, 1.467147e-002, 2.600078e-002, 2.480235e-002, -2.549599e-003, -6.287091e-002, -8.919514e-002, -5.834217e-002, -1.450688e-002, 2.547971e-002, 3.821531e-002, 2.507814e-002, 1.367461e-002, 1.226160e-002, 1.671510e-002, 4.969453e-003, -4.097063e-003, 1.780931e-002, -2.500509e-002, 2.419635e-002, -5.024671e-003, -4.753950e-002, -


© ISO/IEC 2004 — All rights reserved

Copyright International Organization for Standardization
Provided by IHS under license with ISO
No reproduction or networking permitted without license from IHS
Not for Resale

3.295510e-002, 9.484340e-003, 3.735494e-002, 3.475364e-002, -9.053195e-003, -6.831390e-002, -9.182091e-002, -6.785275e-002, -8.490923e-003, 2.701093e-002, 4.521803e-002, 4.024718e-002, -8.158346e-003, -4.783577e-002, -2.617317e-002, 1.333114e-002, 3.349847e-002, 2.514530e-002, -6.334847e-005, -2.362804e-002, -2.197685e-002, -1.234739e-002, -1.394914e-002, -5.731432e-003, 1.873378e-002, -8.602378e-004, 1.752281e-002, -2.790575e-002, -5.334641e-002, -2.929300e-002, 5.832366e-003, 2.960651e-002, 4.401146e-002, 1.735420e-002, -4.660097e-002, -8.770389e-002, -7.755485e-002, -5.517709e-003, 6.227535e-002, 9.991816e-002, 1.020383e-001, 5.161417e-002, -9.827583e-003, -3.187654e-002, -3.861000e-003, 1.538384e-002, 1.687417e-003, -1.454760e-002, -2.904147e-002, -3.685268e-002, -3.187881e-002, -3.524317e-002, -2.787853e-002, 9.973286e-003, 1.231713e-003, -5.271843e-003, -4.254055e-003, 1.088874e-002, 1.176350e-002, 9.848648e-003, 6.469526e-003, 2.318203e-002, 3.261609e-002, -5.033890e-003, -6.213833e-002, -6.629188e-002, 1.969249e-003, 7.589748e-002, 1.270672e-001, 1.189844e-001, 4.915005e-002, -3.052063e-002, -6.743746e-002, -2.837391e-002, 1.514753e-002, 3.441362e-002, 3.602053e-002, 2.628395e-002, 1.783712e-002, 1.109471e-002, -1.209989e-002, -2.957603e-002, -1.258717e-003, -3.585291e-003, -1.178395e-003, 6.493448e-002, 9.352440e-002, 5.702546e-002, -1.165216e-002, -5.303305e-002, -4.725347e-002, -1.667022e-002, 2.436981e-003, -2.005070e-002, -5.170306e-002, -2.399010e-002, 2.460120e-002, 6.593742e-002, 4.629290e-002, -2.182956e-002, -6.249335e-002, -4.012587e-002, 1.074440e-002, 1.334364e-002, -5.002696e-003, -2.456120e-002, -3.126469e-002, -2.284348e-002, 2.083819e-002, 4.837503e-002, 1.599791e-002, -1.948282e-003, 1.113063e-002, -2.084818e-002, 1.356542e-002, 4.285363e-002, 3.889336e-002, 3.300199e-003, -4.131213e-002, -5.300803e-002, -1.243519e-002, 3.757811e-002, 5.327178e-002, 6.006788e-003, -3.997976e-002, -3.718143e-002, -1.653980e-002, -4.206998e-002, -5.706676e-002, -7.011763e-003, 3.719993e-002, 2.560046e-002, -1.623173e-002, -2.862146e-002, -2.975794e-003, 1.123791e-002, 5.566989e-003, -9.925920e-004, 2.713397e-002, 2.177570e-002, 9.203965e-003, -5.277730e-003, -6.868833e-002, -1.446413e-002, 1.132501e-002, 1.982975e-002, 3.103253e-003, -3.121850e-002, -6.415409e-002, -5.243242e-002, 3.178686e-002, 9.624040e-002, 6.167968e-002, -2.079031e-002, -3.522780e-002, -2.792176e-002, -5.302328e-002, -3.286445e-002, 4.285852e-002, 1.266879e-002, -6.531869e-002, -8.391068e-002, -3.761313e-002, 3.460484e-002, 7.668562e-002, 6.861174e-002, 2.022523e-002, -5.242012e-003, -1.760999e-002, 2.359899e-003, -9.185662e-003, -4.563040e-002, -1.546867e-003, -4.327452e-003, -7.969853e-003, -1.673833e-002, -1.561715e-002, -1.730722e-002, -4.947397e-002, -4.576405e-002, 4.274249e-002, 8.773034e-002, -9.666218e-003, 3.565358e-003, 2.978588e-002, -3.219813e-003, 2.778711e-002, 5.161861e-002, -3.587128e-002, -8.249692e-002, -4.857463e-002, 5.468265e-003, 4.479699e-002, 5.152909e-002, 5.653727e-003, -1.643866e-002, -1.318655e-002, -3.235931e-002, -3.287114e-002, 2.648843e-002, 5.752154e-003, 1.906185e-002, -2.049651e-003, 2.171031e-002, -3.075800e-002, -7.267538e-003, 3.854643e-002, 4.294474e-002, -2.701721e-002, 2.945599e-002, 6.390221e-002, -4.318245e-002, -3.458422e-002, -4.592489e-003, 1.016688e-002, 7.379359e-002, 6.925479e-002, 1.890986e-002, 3.104144e-002, 7.301083e-002, 8.603937e-003, 5.797250e-003, 4.286139e-002, -4.497211e-002, -5.495073e-002, -8.997574e-003, -7.916460e-003, -2.884523e-003, 2.246579e-002, 9.192524e-003, 3.697964e-003, -2.429140e-003, 7.484331e-002, 3.587302e-002, 3.327622e-003, 1.859750e-002, -2.272613e-002, -4.989678e-002, 1.084374e-002, 2.492509e-002, -4.511769e-002, -5.359577e-002, -4.371458e-002, 7.465307e-003, 7.606344e-002, 3.339977e-002, -4.471601e-003, 1.325170e-002, 7.533209e-002, -8.542228e-003, -5.730155e-002, 4.067601e-002, -2.519393e-002, -1.318083e-002, 3.112956e-002, 1.281100e-002, 2.082098e-002, 1.478527e-002, 1.997796e-003, -9.101791e-003, -5.355911e-003, 1.527434e-002, 9.519675e-003, 1.043648e-002, -1.246616e-002, -7.130294e-002, -7.422509e-002, -3.078109e-002, 2.507871e-002, 1.325072e-002, -1.906346e-002, -3.880632e-002, -1.453145e-002, 6.787891e-002, 5.738506e-003, -5.440849e-002, -5.742675e-002, -2.178476e-002, -7.928920e-003, -1.680204e-002, -1.757134e-002, -9.491504e-003, 8.186655e-003, 1.622320e-002, -6.395961e-005, 9.371692e-003, 1.905823e-002, 1.807017e-002, -1.357135e-002, -1.973586e-002, 7.997840e-003, 4.170074e-002, 3.767542e-002, -2.240652e-003, -4.422775e-002, -4.399480e-002, -4.393530e-003, 3.848667e-002, 4.496542e-002, 6.000971e-003, -1.331636e-002, -2.869982e-002, 4.490450e-002, 2.054458e-002, -4.226841e-002, -4.613051e-002, -2.044232e-002, 1.453777e-002, 3.512829e-002, 2.294871e-002, -7.194175e-003, -6.739704e-003, 4.666594e-003, 1.305577e-003, 1.233021e-002, 3.507945e-003, 2.693989e-002, -4.212961e-003, -2.812589e-002, -2.154951e-002, -2.390643e-004, -5.640542e-003, -2.062723e-002, -1.474498e-002, 1.616726e-002, 2.730573e-002, 4.252190e-002, 3.370830e-002, 8.587206e-003, 4.932123e-003, -2.792438e-002, -7.185042e-003, 1.589199e-002, -1.704914e-002, -1.117112e-002, -2.405094e-002, -1.544885e-002, -1.048137e-003, -1.229687e-002, -3.327441e-002, -1.279253e-002, 6.804061e-003, 9.521030e-003, 9.705134e-003, -2.275020e-002, 1.355116e-002, 5.272554e-003, -1.203599e-002, -5.161858e-003, 8.615189e-003, 1.005356e-002, 1.448378e-002, 3.304306e-002, 2.618514e-002, 1.958755e-002, 1.167342e-002, -2.213215e-003, 7.934626e-003, 3.173254e-002, -5.205914e-003, -4.774362e-002, -7.044479e-003, -1.336127e-002, 1.027909e-002, 1.486564e-002, 8.771513e-003, 2.426799e-003, -5.529764e-003, -1.070012e-002, 1.279063e-003, 7.985704e-003, -5.827546e-004, -7.857735e-003, -3.108352e-002, -1.401045e-002, -6.579819e-003, -1.155390e-002, 1.130288e-002, 3.881726e-002, 5.198353e-002, 4.820605e-002, 2.502401e-002, -7.303289e-003, -2.330323e-002, -

© ISO/IEC 2004 — All rights reserved


Copyright International Organization for Standardization
Provided by IHS under license with ISO
No reproduction or networking permitted without license from IHS
Not for Resale

3.528050e-002, -9.772350e-003, 3.413708e-002, 6.354875e-002, 3.977190e-002, -3.255692e-002, -6.054099e-002, -2.194894e-002, 2.392940e-002, 4.665430e-002, 4.598065e-002, 3.834947e-002, 1.911623e-002, 4.668482e-003, -6.582943e-003, -1.520616e-002, -2.486741e-002, -3.089983e-002, -4.055774e-002, -2.304652e-002, -3.763240e-002, -4.680119e-002, -2.666454e-002, 3.571293e-003, 8.582097e-003, -3.997494e-003, -3.191494e-002, -4.973292e-002, -6.483254e-002, -4.884111e-002, 1.174791e-002, 5.488872e-002, 7.798686e-002, 7.530058e-002, 2.295122e-002, -5.746361e-002, -9.017020e-002, -3.601018e-002, 2.307953e-002, 4.736237e-002, 4.598429e-002, 1.868602e-002, -1.374307e-002, -3.526985e-002, -4.483091e-002, -4.869299e-002, -4.072208e-002},
{-5.260281e-002, -8.757925e-003, -1.528397e-002, -6.046936e-002, -5.799399e-002, -9.767675e-003, 2.964749e-002, 3.513291e-002, 2.189711e-002, 2.209957e-002, 2.073350e-002, 1.496917e-002, 3.070080e-003, -2.168812e-002, -4.136239e-002, -5.188403e-002, -4.875473e-002, -2.533073e-002, 1.090452e-002, 4.562965e-002, 5.263335e-002, 3.703438e-002, 3.245723e-002, 4.582580e-002, 4.404660e-002, 1.002964e-002, -2.168638e-002, -1.305290e-002, -2.890563e-002, 2.473250e-002, 3.026214e-002, -1.324672e-002, -3.074005e-002, -8.070314e-003, 1.797993e-002, 1.029145e-002, 8.953044e-003, 6.496028e-003, 4.773598e-003, -2.023816e-003, -6.305799e-003, -1.063273e-002, -3.206618e-002, -6.133381e-002, -6.365725e-002, -5.028339e-002, -2.257907e-002, 1.518164e-002, 4.852441e-002, 6.630180e-002, 5.248258e-002, 1.303032e-002, 3.568125e-003, 2.403067e-002, 2.607252e-002, 1.332569e-002, 7.610486e-003, 1.615549e-002, 4.479328e-002, 1.638588e-002, -2.686062e-003, -1.445803e-003, -1.212923e-002, -2.342346e-002, -1.877971e-002, -4.654198e-003, -2.559800e-003, -1.308839e-002, -1.514795e-002, -1.140397e-002, -6.012497e-003, -1.148228e-002, -3.326247e-002, -2.397498e-002, -2.644229e-003, 1.552257e-002, 3.907956e-002, 6.270625e-002, 7.953378e-002, 7.479658e-002, 2.788320e-002, -1.328915e-002, -8.282134e-003, 1.503301e-002, 2.208971e-002, 1.151624e-002, 1.331879e-002, 4.082476e-002, 2.045942e-002, 1.311543e-002, -1.601141e-002, -4.303399e-002, -4.556060e-002, -2.680278e-002, -3.711002e-003, 2.716384e-004, -1.683385e-002, -1.427997e-002, -7.036843e-004, 1.023012e-002, 8.541807e-003, -5.006069e-003, -6.015640e-003, 5.829378e-003, 1.450048e-002, 2.439993e-002, 3.922617e-002, 5.402214e-002, 6.454637e-002, 3.797955e-002, -2.112949e-002, -3.129681e-002, 1.936865e-005, 1.825925e-002, 1.564488e-003, -3.261519e-003, 3.089982e-002, 1.217142e-002, -1.131011e-003, -3.651633e-002, -4.097515e-002, -2.640858e-002, -1.100146e-002, 5.543424e-003, 6.270017e-003, -1.497799e-002, -9.926411e-003, 6.584773e-003, 2.145762e-002, 2.691461e-002, 1.380748e-002, 2.895529e-003, -1.024151e-002, -2.622411e-002, -3.536140e-002, -3.839623e-002, -3.033358e-002, -6.828985e-003, 7.638872e-003, -2.614000e-002, -5.363951e-002, -3.021643e-002, 7.095694e-003, -6.795179e-003, -2.486338e-002, -1.303830e-003, 2.734362e-003, -1.165145e-002, -1.568560e-002, 2.915609e-003, 7.576827e-003, 7.762532e-003, 1.060408e-002, 1.083907e-002, 4.232496e-003, 7.903942e-003, 2.348166e-002, 3.664773e-002, 4.477124e-002, 4.557906e-002, 4.020790e-002, 1.369213e-002, -2.544288e-002, -6.006788e-002, -8.678557e-002, -9.722582e-002, -8.099965e-002, -3.921757e-002, -3.492200e-002, -6.800141e-002, -5.205228e-002, -4.316963e-003, -8.142608e-003, -3.994289e-002, -2.082764e-002, 5.490749e-003, 1.568437e-002, 2.535845e-002, 2.399666e-002, 1.289906e-002, 6.718958e-003, 1.920240e-002, 3.202807e-002, 3.091057e-002, 2.700893e-002, 3.363193e-002, 4.064699e-002, 5.566929e-002, 7.207228e-002, 8.304790e-002, 6.562956e-002, 1.560335e-002, -3.465515e-002, -7.845011e-002, -9.759662e-002, -9.834084e-002, -5.502697e-002, -2.301291e-002, -4.128548e-002, -4.614354e-002, -1.479065e-003, 7.176213e-003, -4.269571e-002, -1.816817e-002, 3.462731e-002, 5.194081e-002, 3.223188e-002, 6.876968e-003, -2.276348e-003, -2.831572e-004, 1.015670e-002, 1.793100e-002, 7.136571e-003, -3.961873e-003, 2.603281e-003, 1.606811e-002, 4.569340e-002, 8.177604e-002, 1.047208e-001, 9.877888e-002, 5.818414e-002, 5.020244e-003, -4.065723e-002, -5.648292e-002, -5.493561e-002, -2.542994e-002, 1.413680e-002, 1.341688e-002, -3.165163e-003, 2.090389e-002, 2.619271e-002, -3.897741e-002, -1.146166e-002, 5.142728e-002, 4.450689e-002, 1.186563e-002, 6.331172e-004, -5.602266e-003, -1.602338e-002, -1.701150e-002, -2.729781e-002, -5.415758e-002, -7.022792e-002, -6.548343e-002, -4.854298e-002, -1.209353e-002, 3.446535e-002, 6.822690e-002, 7.385160e-002, 5.789530e-002, 2.349575e-002, -1.134267e-002, -2.022093e-002, -3.599327e-003, 2.096944e-002, 5.952301e-002, 6.148219e-002, 4.393029e-002, 3.151294e-002, 2.890413e-002, -2.947080e-002, -2.711541e-002, 2.152168e-002, -1.379251e-003, -4.403638e-003, 1.674345e-002, 1.636690e-002, -4.512045e-003, -2.147073e-002, -4.173395e-002, -8.035804e-002, -1.142642e-001, -1.248862e-001, -1.162608e-001, -8.522255e-002, -4.612059e-002, -1.284978e-002, 5.791585e-003, 1.614153e-002, 1.550541e-002, -1.281169e-003, 7.187179e-004, 3.692313e-002, 6.364905e-002, 7.884458e-002, 6.982336e-002, 4.259022e-002, 1.859694e-002, 2.422331e-002, -2.848732e-002, -4.825062e-002, -1.290984e-002, -3.453806e-002, -2.773220e-003, 4.401319e-002, 4.775754e-002, 3.335129e-002, 1.330456e-002, -5.332490e-003, -4.572132e-002, -7.865900e-002, -9.290293e-002, -9.019452e-002, -8.004695e-002, -6.656228e-002, -5.267760e-002, -3.878992e-002, -2.540518e-002, -1.750033e-002, -1.209432e-002, -8.268321e-004, 2.857485e-002, 5.410541e-002, 6.072659e-002, 3.590182e-002, -1.042452e-003, -2.404624e-002, 2.700162e-003, -2.969211e-002, -6.137862e-002, -3.004930e-002, -3.366963e-002, 1.911763e-002, 6.689154e-002, 7.360070e-002, 5.657599e-002, 3.423306e-002, 2.860366e-002, 1.405463e-002, 4.345680e-003, -8.007101e-003, -2.479500e-002, -3.522139e-002, -3.326476e-002, -2.996818e-002, -2.297304e-002, -


© ISO/IEC 2004 — All rights reserved

Copyright International Organization for Standardization
Provided by IHS under license with ISO
No reproduction or networking permitted without license from IHS
Not for Resale

1.394605e-002, -1.339469e-002, -1.298366e-002, -9.639646e-003, 1.032213e-002, 2.522742e-002, 3.083971e-002, -1.136285e-004, -4.601497e-002, -6.748659e-002, -2.278164e-002, -2.976620e-002, -5.394607e-002, -3.004458e-002, -2.426468e-002, 2.549323e-002, 5.521077e-002, 4.809969e-002, 2.375509e-002, 1.031142e-002, 2.013432e-002, 3.372419e-002, 4.595240e-002, 4.756102e-002, 3.049121e-002, 1.364040e-002, 9.388074e-003, 1.137776e-002, 1.684765e-002, 2.027202e-002, 9.404917e-003, -1.479641e-002, -2.579263e-002, -1.776638e-002, 3.665439e-003, 2.027417e-002, 1.013536e-002, -3.480662e-002, -6.724957e-002, -2.337226e-002, -1.131036e-002, -3.398838e-002, -2.402101e-002, -2.966043e-002, 2.094457e-004, 1.972200e-002, 1.357519e-002, -6.424173e-003, -1.718438e-002, -2.037077e-002, -1.740039e-003, 2.365081e-002, 4.289393e-002, 4.412169e-002, 3.461633e-002, 3.184235e-002, 3.807388e-002, 3.961198e-002, 3.360782e-002, 1.186766e-002, -2.422718e-002, -4.435922e-002, -3.528903e-002, -1.095806e-002, 1.881177e-002, 2.827967e-002, 1.102597e-002, -1.137523e-002, 1.207533e-002, 1.917542e-002, -3.149429e-004, -2.305787e-002, -6.131405e-002, -3.306372e-002, 6.048210e-003, 2.618865e-002, 2.876368e-002, 2.702477e-002, 6.825917e-003, -1.135969e-002, -1.198662e-002, -4.584455e-003, 4.034395e-003, 3.479876e-003, 9.579410e-003, 2.952957e-002, 4.101167e-002, 4.359124e-002, 2.378896e-002, 1.205786e-003, -1.365010e-002, -2.445326e-002, -2.272143e-002, -3.294185e-003, 7.761284e-004, -2.795955e-005, 2.339401e-002, 5.086799e-002, 4.011111e-002, 4.152264e-002, -6.857847e-003, -6.029184e-002, -2.866166e-002, 7.319935e-003, 1.620386e-002, 1.295597e-002, 6.134336e-003, -4.238437e-003, -2.007697e-002, -2.311891e-002, -2.563973e-002, -2.349001e-002, -2.396628e-002, -1.273080e-002, 1.463232e-002, 3.380691e-002, 3.444995e-002, 1.352978e-002, 7.435612e-003, 6.176324e-003, -2.720147e-003, 3.149221e-003, 6.864648e-003, -1.513636e-002, -4.461187e-002, -2.156681e-002, 3.398414e-002, 3.364419e-002, 7.272296e-002, 1.950481e-002, -3.838830e-002, -2.291011e-002, -1.819767e-002, -3.668894e-002, -4.846085e-002, -3.459836e-002, -3.127625e-003, 8.888921e-003, -1.498237e-002, -3.118722e-002, -4.398629e-002, -3.303680e-002, -9.577644e-003, -1.439890e-002, -2.098062e-002, -2.255549e-002, -1.633473e-002, -1.540053e-003, -1.198012e-002, -2.127613e-002, 1.248886e-002, 4.848577e-002, 4.628060e-002, 9.947493e-003, -1.515377e-002, -5.261240e-004, -3.781341e-003, 7.820582e-002, 3.871224e-002, 2.825474e-003, 2.849103e-002, 2.742062e-002, -8.409285e-003, -2.910756e-002, -1.187809e-002, 2.718458e-002, 6.702351e-002, 4.947682e-002, -3.524606e-002, -7.860330e-002, -3.363902e-002, 1.470979e-002, -6.146258e-003, -4.117456e-002, -3.194577e-002, -1.234669e-002, -2.695618e-002, -5.762501e-002, -5.682074e-002, -1.295649e-002, 4.705885e-002, 8.019232e-002, 7.415434e-002, 4.738325e-002, 3.637678e-002, -7.303870e-003, 4.027495e-002, 4.185594e-002, 3.584753e-002, 3.300090e-002, 2.252631e-002, 1.993099e-002, 4.477249e-003, -6.800337e-003, -7.270657e-003, 3.591575e-002, 3.970933e-002, -1.666626e-002, -1.047102e-001, -2.843700e-002, 5.372745e-002, 3.237683e-002, -9.366585e-003, 2.097747e-003, 2.148170e-002, -1.600828e-002, -4.157658e-002, -3.470671e-002, -8.636496e-003, 5.830425e-003, 3.350050e-002, 5.270899e-002, 5.469164e-002, 5.091920e-002, 9.560757e-003, -1.548818e-002, -5.103125e-003, -1.053204e-002, -3.067912e-002, -4.549100e-002, -2.988882e-002, 5.833004e-002, 7.845298e-002, 9.632099e-003, -6.128726e-002, -6.912407e-003, 1.912178e-002, -5.359147e-002, -1.246329e-002, 4.238776e-002, 2.716134e-002, 2.158768e-002, 1.212747e-002, -7.335150e-004, -6.907743e-002, -1.421450e-002, -2.261624e-002, -1.558570e-004, -3.741977e-002, -3.381838e-002, -1.082359e-002, -1.809198e-002, -1.989267e-002, -1.408950e-002, -6.908016e-003, -6.530978e-003, -1.708008e-003, 1.831894e-002, 3.608647e-002, -7.777341e-002, -2.121230e-002, 5.878546e-002, 3.025774e-002, -7.210106e-002, -3.461041e-003, 6.879129e-002, -1.700830e-002, -3.468008e-002, -3.595761e-002, -2.489849e-002, 3.180588e-002, 2.412178e-002, -2.288285e-002, -4.094752e-002, 1.023804e-002, -2.352583e-002, -3.965201e-002, -8.523080e-003, 4.236307e-002, 5.218857e-002, 1.530166e-002, -3.742991e-002, -3.353017e-002, 2.959843e-002, 3.101951e-002, 2.660482e-002, 9.375959e-003, -4.542700e-003, -1.606074e-002, -1.914902e-002, 1.578769e-002, 4.311563e-003, -2.084815e-002, 3.593469e-002, 9.369734e-002, 1.771468e-002, 1.845930e-003, -1.774499e-002, -4.029278e-002, 3.095838e-002, 4.130591e-002, -2.816639e-002, -2.843566e-002, -7.233541e-003, -3.997210e-002, -4.672658e-002, -3.339035e-002, -5.046482e-002, -1.680577e-002, 1.997985e-002, 6.841794e-003, 1.169081e-002, 2.257616e-002, 4.327843e-003, -3.147149e-002, -4.685624e-002, -1.744562e-002, 2.050741e-002, 4.156704e-002, 4.372752e-002, 1.358238e-002, -1.582652e-004, 5.685085e-002, 7.948786e-002, 1.853250e-002, 3.727889e-002, 1.784019e-002, -2.211157e-002, 1.193256e-002, 4.283932e-002, -3.984203e-002, -2.467505e-002, 2.024367e-002, 3.707255e-002, 3.594050e-002, 3.646578e-003, -7.171471e-002, -8.272726e-002, -1.869083e-002, 3.697462e-002, 4.446648e-002, 4.758826e-003, -2.583312e-002, -5.407300e-002, -5.289150e-002, -9.713257e-003, 2.816212e-002, 3.691048e-002, 9.432462e-003, -2.796039e-002, -2.366702e-002, 2.521915e-002, 8.482020e-003, 1.438665e-002, 3.732638e-002, 1.568059e-002, -2.516622e-002, -2.287154e-002, 3.553121e-002, -3.734689e-002, -5.187461e-002, 4.763730e-003, 4.560304e-002, 6.131587e-002, 3.435938e-002, -4.005249e-002, -8.372413e-002, -4.273070e-002, 2.809827e-002, 3.163614e-002, -8.333842e-003, -3.467425e-002, -3.513133e-002, -1.908964e-002, -7.494168e-004, 4.311551e-003, -1.626040e-002, -4.868480e-002, -6.192605e-002, -3.968136e-002, -1.341880e-002, -2.899031e-002, -2.116416e-003, 1.752786e-002, -9.615307e-003, -3.751247e-002, -3.913351e-002, 6.196047e-003, -1.035059e-002, -5.270963e-002, -2.859245e-002, 2.959596e-002, 6.028296e-002, 4.723880e-002, -

© ISO/IEC 2004 — All rights reserved


Copyright International Organization for Standardization
Provided by IHS under license with ISO
No reproduction or networking permitted without license from IHS
Not for Resale

8.764481e-003, -5.442694e-002, -3.924031e-002, -6.524915e-003, 7.089984e-003, -2.293457e-002, -4.195242e-002, 2.432694e-004, 2.691823e-002, 3.319962e-002, 1.963989e-002, -8.814646e-003, -3.294393e-002, -3.371720e-002, -7.976416e-003, -2.677582e-002, -3.069784e-002, -7.363916e-003, 1.926906e-002, -5.235966e-004, -2.287565e-002, -2.299341e-002, -2.643661e-002, 2.676813e-003, -2.001835e-002, -1.694728e-002, 2.484074e-002, 6.143026e-002, 6.604716e-002, 3.398969e-002, -1.219803e-002, -3.944192e-002, -4.258200e-002, -8.070231e-003, -3.030613e-002, -4.476696e-002, 5.100133e-003, 5.856964e-002, 7.026975e-002, 6.201530e-002, 3.621832e-002, 1.112882e-002, 5.314200e-003, 4.317468e-003, -2.828532e-002, -9.590859e-003, 1.576358e-002, 4.057238e-002, 4.058560e-002, 3.102305e-002, 2.833013e-002, -1.896295e-003, -1.361459e-002, 3.421897e-003, 2.344683e-003, 3.237817e-002, 6.724143e-002, 7.699831e-002, 5.150329e-002, -4.333256e-003, -5.280869e-002, -5.530611e-002, -1.160361e-002},
{-2.874931e-002, 5.754732e-003, 2.846032e-002, 3.029265e-002, 2.637549e-002, 1.581907e-002, -1.733920e-003, -2.083920e-002, -2.398098e-002, -2.417349e-002, -3.367577e-002, -4.421393e-002, -5.589593e-002, -6.444385e-002, -6.049818e-002, -4.631148e-002, -1.797109e-002, 9.991973e-003, 3.293005e-002, 5.001011e-002, 4.777425e-002, 2.727307e-002, 3.062349e-002, 5.571634e-002, 5.529089e-002, 1.739088e-002, -1.515231e-003, -7.966275e-003, -3.062773e-003, -2.936132e-002, 4.163770e-003, -8.639138e-003, -1.158962e-003, 1.311565e-002, 1.771383e-002, 1.022035e-002, 1.299316e-002, 2.029143e-002, 2.222564e-002, 1.847292e-002, -3.888265e-003, -2.242012e-002, -4.334540e-002, -6.128572e-002, -5.802532e-002, -5.032661e-002, -2.642679e-002, 6.280296e-003, 3.612983e-002, 4.641913e-002, 2.715628e-002, -2.968994e-003, -5.393974e-003, 1.645807e-002, 1.793990e-002, -1.276227e-002, -2.077032e-002, -2.104486e-002, -3.964919e-003, -1.275442e-002, -1.775196e-002, 9.834789e-003, 1.690937e-002, 2.299941e-002, 3.338509e-002, 4.137880e-002, 5.767394e-002, 7.221136e-002, 7.227016e-002, 5.893132e-002, 3.572688e-002, 9.804957e-003, -1.567829e-002, -2.414525e-002, -4.148733e-002, -3.415431e-002, -8.651837e-003, 3.051163e-002, 5.724947e-002, 5.884964e-002, 2.687069e-002, -1.867829e-003, -2.613082e-003, 8.860874e-003, -1.578870e-002, -1.622299e-002, 2.336426e-003, -1.570783e-002, -3.128459e-002, -1.435701e-002, 6.710135e-003, 5.089197e-003, 1.337149e-002, 2.234717e-002, 2.939405e-002, 3.886897e-002, 3.860009e-002, 3.227177e-002, 3.493337e-002, 3.049516e-002, 2.121561e-002, 7.755179e-003, -1.362999e-003, -2.821247e-002, -5.287066e-002, -4.608344e-002, -1.627833e-002, 1.831257e-002, 4.844753e-002, 4.676582e-002, 8.866719e-003, -8.089590e-003, -5.705399e-003, -1.098847e-002, -2.591691e-002, 7.694521e-003, -1.661543e-002, -2.954522e-002, -1.947263e-002, -1.501543e-002, -7.902055e-003, -1.190794e-002, -1.408572e-002, -1.615406e-002, -2.423008e-002, -3.090064e-002, -3.755596e-002, -2.474805e-002, -9.623520e-003, 5.781344e-003, 2.281839e-002, 2.219952e-002, -4.009076e-003, -4.876303e-002, -6.425960e-002, -6.327521e-002, -3.567089e-002, 1.054816e-002, 2.825623e-002, -1.244262e-003, -2.716852e-002, -2.198331e-002, -1.344639e-002, -2.560379e-002, -1.194265e-002, -1.040912e-002, -2.360192e-002, -3.411674e-002, -3.425826e-002, -2.007550e-002, -1.149351e-002, -2.280734e-003, -8.761309e-003, -1.933393e-002, -4.002282e-002, -5.727953e-002, -5.213936e-002, -2.197869e-002, 1.126762e-002, 4.124793e-002, 5.375296e-002, 4.353699e-002, 9.182079e-004, -3.417796e-002, -5.391478e-002, -4.485045e-002, -1.124136e-002, 1.661835e-002, -5.496468e-003, -4.279763e-002, -4.391070e-002, -2.541738e-002, -1.810328e-002, -1.504542e-002, 1.502176e-002, -8.169583e-003, -2.770489e-002, -2.909949e-002, -1.743214e-002, 7.224423e-003, 2.904387e-002, 2.268041e-002, 1.601180e-002, -1.310485e-002, -3.557589e-002, -2.981109e-002, -6.853305e-003, 1.673850e-002, 4.171647e-002, 5.743919e-002, 6.411883e-002, 4.015250e-002, 8.707768e-003, -1.378053e-002, -1.046224e-002, 6.092777e-003, 2.485114e-002, 1.194103e-002, -2.093838e-002, -5.193306e-002, -2.925179e-002, -1.154068e-002, -1.564493e-002, 4.769407e-002, 8.865605e-003, -1.509842e-002, -1.231427e-002, -8.325990e-003, 1.262438e-002, 3.491262e-002, 4.165156e-002, 4.276202e-002, 2.154176e-002, -1.791649e-003, -9.689589e-004, 4.540783e-004, -2.977471e-003, 6.695600e-003, 1.540151e-002, 3.364439e-002, 3.394531e-002, 1.759572e-002, 6.724190e-003, 6.680198e-003, 1.501313e-002, 2.034978e-002, 1.037591e-002, -9.335511e-003, -4.085547e-002, -2.757850e-002, -6.952662e-003, -1.065215e-002, 6.341860e-002, 1.961331e-002, -1.561490e-003, 8.279868e-003, 1.061186e-002, 1.291252e-002, 2.515220e-002, 3.992013e-002, 5.430796e-002, 5.664420e-002, 4.497493e-002, 2.707237e-002, 8.877482e-003, -2.034798e-002, -3.945922e-002, -3.288168e-002, -6.188459e-003, 2.810405e-003, -7.707990e-005, -6.609535e-003, -1.444604e-003, 2.293856e-003, -1.723880e-003, -1.068046e-002, -2.226974e-002, -2.659943e-002, -1.330074e-002, 1.079927e-002, -2.204682e-003, 5.640333e-002, 1.389921e-002, 5.444135e-003, 5.958569e-003, -6.983642e-003, -8.148624e-003, -2.934046e-003, 1.724831e-002, 3.912063e-002, 5.978612e-002, 7.137139e-002, 5.101108e-002, 1.956344e-002, -1.792678e-002, -5.154891e-002, -5.032966e-002, -2.344554e-002, -1.115944e-002, -9.248373e-003, -2.106347e-002, -2.673295e-002, -2.774948e-002, -3.167016e-002, -2.778248e-002, -2.432653e-002, -1.392751e-002, 1.148082e-002, 3.664792e-002, 1.639803e-002, 2.491906e-002, 9.221844e-003, 1.020440e-002, -3.876306e-003, -2.547729e-002, -3.460746e-002, -3.953952e-002, -2.793019e-002, 6.691065e-003, 4.000988e-002, 5.777607e-002, 5.108453e-002, 1.989030e-002, -1.661725e-002, -4.754507e-002, -4.336085e-002, -9.543121e-003, 1.641615e-002, 2.122669e-002, 7.269199e-003, -1.450525e-002, -2.511713e-002, -2.816891e-002, -1.985486e-002, -1.011824e-002, 4.573157e-003, 3.978045e-002, 6.079726e-002, 1.968651e-002, 8.001070e-004,


© ISO/IEC 2004 — All rights reserved

Copyright International Organization for Standardization
Provided by IHS under license with ISO
No reproduction or networking permitted without license from IHS
Not for Resale

1.143819e-002, 1.180767e-002, -1.695440e-002, -4.297608e-002, -7.438360e-002, -8.467287e-002, -6.940375e-002, -3.448094e-002, 5.716400e-003, 3.179506e-002, 3.492217e-002, 1.545820e-002, -8.624648e-003, -3.866372e-002, -3.615861e-002, 3.419212e-003, 3.603259e-002, 4.176170e-002, 2.565469e-002, 5.485963e-003, -2.817468e-003, -2.029660e-003, 6.535704e-003, 1.414495e-002, 1.628893e-002, 5.141334e-002, 8.018128e-002, 2.112064e-002, -1.651057e-002, 1.359495e-002, 1.517388e-002, -1.398458e-002, -4.527327e-002, -7.220603e-002, -8.652838e-002, -8.167872e-002, -5.716777e-002, -2.005590e-002, 1.373890e-002, 2.375509e-002, 1.367998e-002, -5.980009e-003, -2.941534e-002, -2.844377e-002, 2.255571e-003, 2.549438e-002, 2.289712e-002, 5.300506e-004, -1.627306e-002, -1.846095e-002, 3.871350e-003, 2.900160e-002, 2.914802e-002, 8.303775e-003, 3.151156e-002, 6.896600e-002, 1.608163e-002, -2.897467e-002, 1.553188e-002, 2.938858e-002, 1.536145e-002, -1.150010e-003, -1.201114e-002, -2.486737e-002, -3.397562e-002, -3.177307e-002, -7.214587e-003, 2.291912e-002, 3.335341e-002, 1.856719e-002, 9.552650e-005, -2.073168e-002, -1.785183e-002, 1.037871e-002, 1.249118e-002, -8.836794e-003, -4.347103e-002, -6.038671e-002, -4.710081e-002, 4.091872e-003, 5.555056e-002, 6.512579e-002, 1.189285e-002, -1.450696e-002, 2.662845e-002, -6.910737e-003, -3.873133e-002, 1.734905e-002, 2.925688e-002, 7.159175e-003, 7.157032e-003, 1.632124e-002, 8.950802e-003, -3.303791e-004, -7.141534e-003, 1.063186e-002, 3.255904e-002, 3.855698e-002, 2.953588e-002, 6.264266e-003, -1.334605e-002, -4.671193e-003, 2.711220e-002, 2.590041e-002, -5.521657e-003, -3.814488e-002, -4.307523e-002, -2.837853e-002, 3.169851e-002, 9.163818e-002, 1.186703e-001, 6.365162e-002, -2.413228e-002, -2.953111e-002, -4.887456e-002, -2.034869e-002, 6.715298e-003, -7.548188e-003, -2.521769e-002, -1.198255e-002, -7.109630e-003, -1.811575e-002, -2.850956e-002, -4.409191e-002, -5.341449e-002, -3.747932e-002, -1.548039e-002, -2.229148e-003, -2.398151e-002, -4.196684e-002, -2.979144e-002, 8.086155e-003, 1.442954e-002, -1.382072e-002, -4.005483e-002, -4.595730e-002, -3.928602e-002, 1.435732e-003, 3.739044e-002, 6.357641e-002, 4.477531e-002, 9.617671e-003, -1.228965e-002, -5.560573e-002, 1.366096e-002, 1.121104e-003, -1.963557e-002, -3.329629e-002, -3.863596e-002, -5.369945e-002, -3.990575e-002, 2.024891e-003, 3.785351e-002, 5.217945e-002, 3.471497e-002, -1.150478e-003, -2.325313e-002, -4.856968e-002, -5.093573e-002, -4.188757e-002, -1.612030e-002, 2.443184e-002, 6.686950e-002, 9.694150e-002, 7.365119e-002, 2.464345e-002, 9.625482e-004, -2.178648e-002, -2.833149e-002, -1.876343e-002, -2.053263e-002, 2.384072e-002, -4.338151e-003, 3.073786e-002, -1.204267e-002, -1.225916e-002, -2.280340e-002, -4.086300e-002, -3.754284e-002, -2.563309e-002, -5.948221e-003, 1.563885e-002, 6.015975e-002, 8.348997e-002, 6.235592e-002, 1.492711e-002, 8.467260e-004, 2.301555e-002, 1.139312e-002, -4.590891e-003, 3.801135e-002, 9.876277e-002, 8.510326e-002, 3.387874e-002, -1.313123e-002, -1.748394e-002, -1.927649e-002, -2.889761e-002, -4.960407e-002, -5.467754e-002, 1.882897e-002, 4.187420e-002, 5.388749e-002, -7.940784e-003, 3.511633e-003, -5.184754e-003, 1.516535e-002, 4.243440e-002, 3.286957e-002, 7.491934e-003, 1.255017e-002, 2.260932e-003, 1.674211e-002, 3.726554e-002, 5.253909e-002, 5.721616e-002, 1.000385e-001, 6.916233e-002, -3.008408e-003, -4.549515e-003, -8.169400e-003, -3.017056e-002, -5.536125e-002, -4.711755e-002, -1.643237e-002, 5.986067e-004, 5.474142e-003, -3.292510e-002, -7.289219e-002, 7.082170e-004, 6.832700e-002, 1.392546e-002, -2.682116e-002, 1.364624e-002, -3.193765e-003, 3.796557e-002, 6.342548e-002, -9.615644e-003, -3.897729e-002, 5.144185e-004, -3.327909e-002, -4.817647e-002, -3.551387e-003, 2.515750e-002, 1.020360e-002, 3.900118e-002, 4.052824e-002, -2.474001e-002, -3.297259e-002, -1.655034e-002, -1.689139e-002, -6.182738e-002, -1.360127e-002, 3.078921e-002, 1.349483e-002, 2.550355e-002, 1.236847e-002, -2.050653e-002, 1.278012e-002, 5.028969e-002, 1.276753e-002, -1.113415e-002, 8.477396e-003, 1.944036e-002, 3.613389e-002, 5.843373e-002, -2.098854e-002, -4.302731e-002, 1.954146e-002, -2.496092e-002, -6.389316e-002, 8.243616e-004, 1.871594e-002, -3.063562e-002, -3.618595e-002, -1.566626e-003, 1.849407e-002, 2.532666e-002, 4.282365e-002, 1.792753e-002, -4.246102e-002, 3.693420e-003, 3.947351e-002, -9.630932e-003, 2.605774e-003, 3.327936e-002, 2.250467e-002, 5.459959e-002, 2.305096e-002, 2.049864e-002, 1.121338e-002, 8.558427e-003, -3.777056e-003, -2.501491e-002, -1.628340e-002, -4.013294e-003, 1.162681e-002, 3.603717e-002, 5.853916e-003, -3.255391e-002, 2.603585e-002, 2.515312e-002, -2.637090e-002, -4.724372e-002, -2.001140e-002, 9.503101e-003, 6.361736e-002, 6.713466e-002, 4.180046e-002, 1.956752e-003, -2.669699e-002, -4.268921e-002, -1.311397e-002, 2.255976e-002, 1.967345e-002, 3.135652e-003, 2.091666e-002, -2.127924e-002, 5.783357e-003, -4.177586e-003, -2.430079e-002, -5.513672e-002, -9.136002e-002, -7.962775e-002, -4.242353e-002, -1.103463e-003, 3.143691e-002, 1.345767e-002, -1.239573e-002, 1.240039e-002, -1.864084e-003, -1.870831e-002, -3.766974e-002, -2.009351e-002, -1.755899e-002, 3.253443e-002, 8.866937e-002, 5.884006e-002, -4.671683e-003, -6.070308e-002, -1.010696e-001, -9.003031e-002, -5.149687e-002, -5.178421e-002, -5.865336e-002, -2.908862e-002, -4.404503e-002, -3.555376e-003, -1.060559e-002, -1.767571e-002, -3.135355e-002, -4.503647e-002, -1.899383e-002, 2.122946e-002, 5.410298e-002, 6.152055e-002, 2.903944e-002, -4.702093e-003, -1.550709e-002, -1.174424e-002, -1.675238e-002, -2.799282e-002, -1.291670e-002, -4.136012e-002, -3.616603e-002, 4.435713e-002, 7.031103e-002, 3.916551e-002, -1.677162e-002, -6.629917e-002, -7.333360e-002, -3.368930e-002, -4.335246e-002, -5.589143e-002, -5.803396e-002, -4.820439e-002, -4.455587e-003, -1.322765e-002, 3.377386e-003, 1.553366e-002, 2.114520e-002, 4.633519e-002, 7.407819e-002, 8.297829e-002,

© ISO/IEC 2004 — All rights reserved


Copyright International Organization for Standardization
Provided by IHS under license with ISO
No reproduction or networking permitted without license from IHS
Not for Resale

7.114885e-002, 2.637476e-002, -2.637048e-002, -3.275968e-002, 5.359918e-003, -9.263862e-003, -1.555604e-002, 2.353278e-002, -2.466569e-002, -8.924309e-002, -5.367379e-002, 1.254922e-002, 3.756688e-002, 2.233126e-002, -9.700433e-003, -1.394556e-002, 1.265741e-002, 3.351926e-003, -2.860735e-002, -4.006835e-002, -1.004343e-002, 1.695252e-002, 7.727965e-003, -3.270369e-003, 1.165096e-002, 4.114046e-002, 7.330041e-002, 8.704252e-002, 7.695820e-002, 3.952349e-002, -3.836191e-002, -7.696061e-002, -3.519064e-002, 2.021473e-002, -3.314532e-003, -1.290671e-002, 5.871183e-002, 3.484789e-002, -7.739193e-002, -1.137095e-001, -8.041933e-002, -3.083307e-002, 5.222255e-003, 1.520327e-002, 2.211009e-002, 4.476017e-002, 4.264454e-002, 4.848477e-003, 1.534911e-002, 3.563685e-002, 3.299877e-002, 4.170899e-002, 2.601671e-002, 1.557047e-002, 2.308200e-002, 3.414914e-002, 2.978660e-002, -2.707925e-005, -4.597541e-002, -1.003940e-001, -9.625489e-002, -3.988820e-003, 3.145594e-002, -7.597236e-003, -1.855903e-002, 5.836453e-002, 8.651760e-002, -8.564069e-003, -1.027016e-001, -1.148260e-001, -7.086019e-002, -2.500738e-002, 9.224702e-003, 4.574754e-002, 7.905221e-002, 8.267691e-002, 7.686301e-002, 7.216939e-002, 6.287487e-002},
{-2.003301e-002, 1.166924e-002, 3.208965e-002, 2.818450e-002, 7.695188e-003, 6.428403e-004, -1.518484e-002, -2.334403e-002, -2.884967e-002, -1.920168e-002, -1.101430e-002, -1.629721e-002, -3.010652e-002, -3.724570e-002, -3.643249e-002, -2.478468e-002, -8.075879e-003, 5.002709e-003, 4.654790e-003, -2.219548e-003, 4.686371e-004, -4.154873e-003, 1.180949e-002, 2.806906e-002, 6.561905e-003, -2.195830e-002, -2.080802e-004, 2.045720e-002, -3.293047e-002, -1.899105e-002, 6.229357e-003, 1.412384e-002, 6.248503e-003, 4.876062e-003, 1.579610e-002, 1.539566e-002, -2.496135e-003, -1.352838e-003, 1.742137e-002, 2.818481e-002, 1.403160e-002, -1.173557e-002, -2.115960e-002, -1.018708e-002, 9.893447e-003, 2.286045e-002, 3.331371e-002, 1.654883e-002, -1.210292e-003, -2.440967e-003, -3.450218e-003, -1.518068e-002, -1.404465e-002, 1.455672e-002, 1.125714e-003, -3.166742e-002, 2.885110e-003, 1.521415e-002, -2.062684e-002, -1.255753e-002, -1.145688e-002, -1.572759e-002, 1.458085e-002, 3.232829e-002, 2.022066e-002, -9.700904e-003, -1.705236e-002, -1.550752e-003, 7.815508e-003, -5.474958e-003, -2.430270e-002, -3.635648e-002, -1.512788e-002, 2.597281e-002, 3.376180e-002, 3.476407e-002, 4.210404e-003, -2.584788e-002, -3.204635e-002, -1.359906e-002, -7.222448e-003, -1.111900e-002, -1.217059e-002, 4.759492e-003, -8.690209e-003, -2.022570e-002, 1.973497e-002, -2.295253e-002, -1.951558e-002, -1.382135e-002, 9.953223e-003, 3.535085e-002, 4.226793e-002, 1.841862e-002, -1.490625e-002, -3.358614e-002, -2.132043e-002, 4.181232e-003, 2.020481e-003, -9.444005e-003, -1.692847e-002, 1.417921e-002, 6.620353e-002, 6.931596e-002, 4.515665e-002, -3.018023e-003, -4.551071e-002, -5.405261e-002, -3.010448e-002, 3.390111e-003, 2.383726e-002, 1.532368e-002, -2.205942e-003, 4.692988e-003, -4.969495e-003, -2.503515e-003, -2.144026e-002, -6.259231e-003, 3.284147e-004, 2.389995e-002, 5.044550e-002, 4.532475e-002, 2.879302e-002, -2.726548e-003, -2.886545e-002, -1.926022e-002, 1.576857e-002, 2.284936e-002, 1.185707e-002, 5.891586e-003, 3.419965e-002, 7.624690e-002, 7.949042e-002, 4.495443e-002, -1.247265e-002, -5.551239e-002, -6.750454e-002, -4.445713e-002, -3.534418e-004, 3.347923e-002, 4.876141e-002, 2.865477e-002, -3.253496e-003, 1.419350e-002, 5.511281e-003, 8.971262e-003, 4.085791e-003, -4.042329e-003, 9.281500e-003, 3.922626e-002, 6.395906e-002, 6.715318e-002, 2.275268e-002, -3.087131e-002, -3.252567e-002, -5.338695e-003, 6.482688e-004, -1.855186e-003, -8.417956e-003, 3.861963e-003, 3.536881e-002, 5.422024e-002, 3.101124e-002, -1.518985e-002, -5.959720e-002, -6.826655e-002, -4.274638e-002, -1.143263e-003, 2.815748e-002, 4.326708e-002, 4.318896e-002, 8.585863e-003, -7.495507e-003, 1.852462e-002, 1.026032e-002, -1.327133e-002, -3.572809e-002, -2.451011e-002, 1.701092e-002, 7.640724e-002, 9.854201e-002, 3.388041e-002, -5.234814e-002, -7.368911e-002, -4.544292e-002, -2.818675e-002, -2.566980e-002, -3.852628e-002, -3.472726e-002, -1.022853e-002, 3.041774e-002, 2.866514e-002, -1.371380e-003, -2.907371e-002, -3.137088e-002, -5.874368e-003, 3.172750e-002, 4.863516e-002, 3.090289e-002, 1.700182e-002, 9.966064e-003, -1.959990e-002, 2.622989e-003, -1.610531e-002, -4.267921e-002, -5.848449e-002, -4.744087e-002, -7.339705e-003, 6.069225e-002, 9.217933e-002, 2.821806e-002, -6.734170e-002, -8.514724e-002, -4.516765e-002, -2.190828e-002, -3.100192e-002, -5.116845e-002, -5.509860e-002, -3.418395e-002, 1.291839e-002, 2.666340e-002, 1.367447e-002, 6.722945e-003, 1.304927e-002, 3.425316e-002, 6.781777e-002, 7.635150e-002, 2.472607e-002, -2.192744e-002, -2.487212e-002, -2.091236e-002, -1.352643e-002, -3.367315e-002, -5.359901e-002, -5.940898e-002, -6.900005e-002, -3.016391e-002, 3.303696e-002, 6.080504e-002, 1.746227e-002, -6.101086e-002, -7.250957e-002, -2.367150e-002, 1.352444e-002, -7.924369e-003, -4.547594e-002, -6.429394e-002, -5.482822e-002, -2.796732e-003, 2.493447e-002, 1.839663e-002, 1.891436e-002, 3.684152e-002, 5.284205e-002, 7.433496e-002, 8.127966e-002, 3.169691e-002, -3.904940e-002, -5.175945e-002, -2.311546e-002, -1.620974e-002, -1.832641e-002, -1.684648e-002, -4.868688e-002, -8.543141e-002, -4.360531e-002, 1.921943e-002, 4.477275e-002, 1.117322e-002, -4.415167e-002, -4.665852e-002, 8.129174e-004, 4.336509e-002, 2.227779e-002, -1.834686e-002, -4.327234e-002, -5.134320e-002, -2.306422e-002, 1.160394e-002, -1.318038e-003, -1.443745e-002, 3.971884e-003, 1.415420e-002, 3.348746e-002, 5.652305e-002, 2.501510e-002, -4.096473e-002, -5.300237e-002, -1.194768e-002, -1.568151e-004, 1.140914e-002, 2.944700e-002, -3.927749e-002, -8.574577e-002, -3.199885e-002, 3.413039e-002, 5.508785e-002, 3.152695e-002, -7.180572e-003, -1.092537e-002, 1.884355e-002, 6.270347e-002, 5.323850e-002, 2.083467e-002, -


© ISO/IEC 2004 — All rights reserved
--`,,```,,,,````-`-`,,`,,`,`,,`---

Copyright International Organization for Standardization
Provided by IHS under license with ISO
No reproduction or networking permitted without license from IHS
Not for Resale

6.857174e-003, -2.452930e-002, -3.264758e-002, -9.320457e-003, -3.049606e-003, -2.415550e-002, -3.664434e-002, -3.359145e-002, -1.793044e-002, 1.931694e-002, 1.037313e-002, -3.033051e-002, -3.296586e-002, 4.494170e-003, 1.440327e-002, 3.558396e-002, 5.902370e-002, -2.762804e-002, -5.211527e-002, 1.532316e-002, 7.108883e-002, 8.732850e-002, 6.900715e-002, 1.683075e-002, -1.520455e-002, -6.491386e-003, 3.443879e-002, 5.334353e-002, 4.108179e-002, 1.436689e-002, -9.983567e-003, -3.154451e-002, -1.938135e-002, 7.891429e-003, -6.350293e-003, -2.976971e-002, -5.266798e-002, -4.531513e-002, -1.323453e-002, 4.336443e-003, -8.946753e-003, -4.606923e-003, 2.151952e-002, 3.166585e-002, 3.148480e-002, 5.753029e-002, -2.221982e-002, -3.780835e-002, 2.553434e-002, 7.062127e-002, 7.953256e-002, 5.509489e-002, -9.651332e-004, -3.911834e-002, -4.120484e-002, -5.921289e-003, 4.427138e-002, 5.827141e-002, 3.938271e-002, 1.499071e-002, -1.344069e-002, -2.363265e-002, 4.527178e-003, 1.054675e-002, -1.316475e-002, -5.037639e-002, -5.927643e-002, -4.341950e-002, -1.650905e-002, -7.948670e-003, 1.018191e-002, 3.073290e-002, 3.169649e-002, -1.997163e-003, 3.235517e-002, -4.134890e-002, -6.051420e-002, -1.063131e-002, 1.137832e-002, 2.209568e-002, 1.686242e-002, -7.979442e-003, -3.592542e-002, -4.270994e-002, -1.857684e-002, 3.751531e-002, 6.927751e-002, 5.822188e-002, 3.900169e-002, 1.734348e-002, -3.376065e-003, 6.252836e-003, 3.185112e-002, 2.598867e-002, -2.094701e-002, -5.791137e-002, -7.257286e-002, -6.016817e-002, -4.013400e-002, -6.500648e-003, 1.982759e-002, 4.882657e-003, -4.450917e-002, 1.929090e-002, -2.702879e-002, -5.218718e-002, -2.411236e-002, 2.259511e-003, 2.495630e-002, 4.454537e-002, 4.790945e-002, 2.580166e-002, 3.300688e-003, -7.852243e-003, 1.974220e-002, 5.576821e-002, 6.048822e-002, 2.945683e-002, 1.642665e-002, 1.310573e-002, 1.838823e-002, 4.588554e-002, 6.123245e-002, 3.188157e-002, -6.192247e-003, -2.972422e-002, -3.283572e-002, -3.209905e-002, -1.882359e-002, 1.908749e-003, -3.005273e-002, -3.931187e-002, 5.879820e-002, -7.708524e-003, -3.174307e-002, -6.204946e-003, 1.486182e-002, 1.906148e-002, -1.480771e-003, -1.953730e-002, -2.367618e-002, -2.980975e-002, -5.057213e-002, -4.233894e-002, -1.545222e-002, 1.988666e-003, -3.103742e-002, -5.612895e-002, -2.553591e-002, -8.159921e-003, -2.405095e-003, 6.090370e-003, 1.029538e-002, 1.368013e-002, 1.843054e-003, -9.602681e-003, -9.112018e-003, 1.168586e-002, 2.290524e-002, -4.213037e-002, 1.984459e-002, 3.745002e-002, -4.782606e-002, -3.781421e-002, 1.051363e-002, 2.384942e-002, 5.499168e-003, -1.552360e-002, -1.189881e-002, 6.679014e-003, 2.673419e-003, -3.159728e-002, -3.674763e-002, -7.083267e-003, 1.970515e-003, -2.704507e-002, -3.168902e-002, 6.181488e-003, 2.943078e-003, -2.403770e-002, -3.366543e-002, -1.790407e-002, 2.865450e-002, 4.659179e-002, 1.872726e-002, -1.798496e-002, -1.431877e-002, 3.031407e-002, -1.781612e-002, 4.307620e-002, -7.018808e-003, -1.835928e-002, 3.313284e-002, 5.204054e-002, 2.160018e-002, -4.397581e-002, -8.335169e-002, -6.998920e-002, 6.739322e-003, 6.069904e-002, 4.397867e-002, 3.790371e-002, 6.684253e-002, 6.076524e-002, 3.498985e-002, 3.799376e-002, 3.129976e-002, -1.272856e-002, -7.145294e-002, -9.088732e-002, -6.511096e-002, -3.777707e-004, 5.178211e-002, 5.040643e-002, 5.446139e-003, -2.796326e-002, 5.775466e-003, 4.313761e-003, 5.027932e-002, -4.751418e-003, 1.676458e-002, 5.056847e-002, 4.344129e-002, 3.671663e-002, 2.043745e-002, -2.033805e-002, -1.673916e-002, -4.380052e-003, 4.448992e-002, 6.771375e-002, 6.975280e-002, 7.280672e-002, 5.180816e-002, 5.092403e-002, 7.098468e-002, 4.136168e-002, -2.385349e-002, -2.996443e-002, -3.167311e-002, 9.433920e-003, 5.842424e-002, 8.145596e-002, 5.715845e-002, 4.699012e-002, 1.047116e-002, 1.729471e-002, 3.008717e-002, -6.488599e-003, -5.293840e-002, -7.686246e-003, -2.054558e-004, -4.483093e-002, 3.233714e-002, 4.021560e-002, 4.739914e-003, 6.869788e-002, 3.873272e-002, -2.901566e-003, -2.113193e-002, -6.375170e-003, -1.711865e-002, -2.951131e-002, -9.737556e-003, 3.579215e-002, 7.857979e-003, 4.663985e-003, 2.576332e-002, -2.645365e-002, -1.795276e-002, 1.394004e-002, -5.604880e-003, -5.712832e-002, 5.948619e-003, 3.058198e-002, 3.029149e-005, 2.270809e-002, -6.658981e-002, -7.677683e-002, -1.689001e-004, -2.429933e-002, -1.230622e-001, -4.898274e-002, 4.334252e-002, 1.391091e-002, -2.015477e-002, -3.140021e-003, -6.987947e-002, -7.713718e-002, -5.680505e-002, -4.717173e-002, -3.592340e-002, -4.132561e-003, 3.435661e-003, -3.776336e-002, -6.655175e-003, -2.218574e-002, -2.447217e-002, 4.895243e-002, 4.966233e-002, -4.345795e-002, -1.123291e-001, -4.765849e-002, 5.373497e-003, -6.109138e-002, -4.882420e-002, -3.371428e-002, -2.758470e-002, 4.493859e-002, 4.737271e-002, -7.635373e-003, -3.343475e-002, -1.518051e-003, -3.181237e-002, -6.135710e-002, -5.912657e-002, -7.850819e-002, -4.594620e-002, -3.682739e-002, -3.684710e-002, -3.614076e-002, 1.209582e-003, 2.043966e-002, -1.244269e-002, -2.783072e-002, -2.484928e-002, -5.078330e-003, 4.765242e-002, 5.004640e-002, 2.008918e-003, 3.318989e-003, 1.474117e-002, 8.042160e-003, -6.728654e-002, -7.537934e-002, 5.469969e-003, -3.355310e-003, 3.128342e-002, 2.820108e-002, 7.867242e-004, -6.107432e-003, -1.439275e-002, -1.071614e-002, 1.050480e-002, 1.549060e-002, 2.225011e-002, 3.226408e-002, -9.135203e-003, -2.642500e-002, -2.289470e-002, 7.955117e-004, 3.801748e-002, 4.012665e-002, 2.650337e-002, 1.724664e-002, 3.276909e-003, -6.954426e-003, -1.218468e-002, -9.161930e-003, -3.155098e-003, 7.337278e-003, 1.352700e-003, -3.879989e-002, -4.015991e-002, 1.632614e-002, 5.705474e-004, 3.525213e-003, -6.854755e-004, -4.025604e-003, 5.169448e-003, 2.284837e-002, 5.064705e-002, 7.408509e-002, 7.913961e-002, 8.914432e-002, 5.995965e-002, 1.225040e-002, 1.533811e-004, 1.417489e-002, 9.288301e-003, 2.833781e-002, 4.643328e-002, 4.938273e-002, 4.588647e-002, 3.448523e-002,

© ISO/IEC 2004 — All rights reserved


Copyright International Organization for Standardization
Provided by IHS under license with ISO
No reproduction or networking permitted without license from IHS
Not for Resale

1.811243e-002, -4.633670e-004, -1.213146e-002, -1.502054e-002, -8.594080e-003, -4.195411e-003, -5.361871e-003, 4.139591e-003, 2.298905e-002, 6.728432e-003, -1.211654e-002, -1.010464e-002, -7.492284e-003, 8.743170e-003, 3.324588e-002, 4.530103e-002, 3.856121e-002, 3.560626e-002, 6.284954e-002, 4.550209e-002, 6.051900e-003, 1.980195e-002, 4.104187e-002, 1.120616e-002, -1.089328e-002, 1.407218e-002, 5.966672e-003, 1.159238e-002, 9.476309e-003, 1.182270e-002, 8.629926e-003, -2.119928e-003, -3.730369e-003, -8.888159e-003, -5.923090e-003, 1.666740e-002, 3.156941e-002, 1.628792e-002, 3.186007e-002, 1.047379e-002, -4.272795e-003, -1.532112e-002, -9.229034e-003, -8.750898e-003, -3.203804e-002, -6.210354e-002, -4.465255e-002, 8.653920e-003, 9.855064e-003, -1.892606e-002, 1.937797e-002, 3.889797e-002, 8.262412e-003, -2.987216e-002, -2.206773e-002, -2.859301e-002, -4.598381e-002, -3.820547e-002, -2.810035e-002, -1.210688e-002, -6.206986e-003, -4.866443e-003, -1.402382e-003, 1.884501e-002, 5.072154e-002, 4.508748e-002, 1.366243e-002, 5.175750e-002, 5.140298e-002, 3.577643e-002, 4.282475e-003, -2.002598e-002, -5.814652e-002, -9.907745e-002, -1.203397e-001, -9.305062e-002, -4.642721e-002, -5.259682e-002, -5.830506e-002, -1.908877e-002, -1.676753e-002, -2.223291e-002, -4.952953e-002, -5.059567e-002, -6.776801e-002, -9.111426e-002, -6.490306e-002, -4.030267e-002, -7.879755e-003, 1.596122e-002, 3.316546e-002, 4.887060e-002, 6.213055e-002, 6.628512e-002, 3.912016e-002},
{2.625283e-002, 1.759030e-002, -2.333646e-003, 5.722168e-003, 2.962230e-002, 2.600565e-002, -8.367371e-004, -2.095565e-002, -1.913674e-002, 2.059098e-004, 9.913494e-003, 1.511675e-002, 2.009199e-002, 9.484852e-003, -1.650333e-002, -2.885307e-002, -3.618786e-002, -3.886544e-002, -2.905048e-002, -2.370936e-003, 1.184838e-002, -5.891292e-003, -2.331325e-002, -2.315210e-002, -3.931275e-002, -3.569959e-002, -1.395604e-002, 4.904385e-003, -1.066430e-002, 2.081503e-002, 1.901870e-003, 8.242250e-003, 2.862015e-002, 3.194787e-002, 8.441885e-003, -2.782619e-002, -3.939920e-002, -2.270210e-002, 2.052357e-004, 7.952065e-003, 2.001145e-002, 3.481371e-002, 3.594759e-002, 2.377442e-002, 1.218005e-002, 1.279684e-002, 4.288432e-003, -6.789906e-004, 1.367684e-003, 1.873310e-002, 1.323553e-002, -1.504700e-002, -2.178817e-002, -6.096171e-003, 1.074189e-003, 7.406946e-003, 3.266671e-002, 2.803433e-002, -1.169052e-003, -7.268561e-003, -3.193765e-003, 1.056172e-002, 1.575887e-002, -1.270498e-002, -4.068196e-002, -3.517405e-002, -2.186628e-002, -1.654736e-002, -1.461088e-002, -2.770247e-003, 1.126246e-002, 2.928040e-002, 3.280721e-002, 4.074541e-002, 4.555186e-002, 3.192573e-002, 1.826607e-003, -1.858268e-002, -1.143810e-002, 7.376202e-003, -8.498898e-003, -1.991991e-002, -6.243962e-003, 1.394199e-002, 1.110879e-002, 2.358388e-002, 4.319947e-002, -1.045279e-002, -2.125835e-002, -2.627902e-002, 4.947606e-003, 1.889087e-002, 1.201440e-002, 3.002875e-003, 1.323193e-003, -1.125009e-003, -1.441308e-002, -1.852078e-002, -1.251592e-002, -6.293259e-003, 2.760166e-003, 5.009270e-003, 1.120216e-002, 7.472985e-003, -6.682222e-003, -2.804337e-002, -4.363760e-002, -4.307495e-002, -1.168942e-002, 1.480971e-002, -1.698497e-002, -2.438994e-002, 2.629908e-003, 2.130783e-002, -2.091058e-003, 1.782224e-002, 1.892168e-003, -3.864117e-002, -2.706367e-002, 1.237338e-002, 3.887763e-002, 2.123527e-002, 2.362195e-002, 2.698130e-002, 1.886843e-002, -8.747420e-004, -3.437399e-003, 3.897584e-003, -3.913006e-004, -1.263286e-002, -2.477924e-002, -3.327404e-002, -3.694212e-002, -3.972365e-002, -4.946929e-002, -5.956056e-002, -5.345994e-002, -2.225003e-002, 2.678722e-002, 2.454533e-002, -6.274636e-003, -3.787436e-003, 2.037474e-002, 2.930287e-003, -1.906375e-002, 9.278756e-003, -2.333948e-002, -1.840650e-002, 5.228974e-003, 7.568784e-003, 9.483833e-003, 2.057316e-002, 1.110219e-002, -2.624293e-003, -8.872333e-003, -1.243824e-003, 1.718490e-002, 2.052537e-002, 1.392238e-002, -9.139953e-003, -2.806884e-002, -2.381651e-002, -8.643853e-005, 4.905063e-003, -7.218345e-003, -9.414798e-003, 4.323292e-003, 3.561699e-002, 5.247884e-002, 3.043656e-002, 5.293759e-003, 1.318711e-002, 1.317079e-002, -1.840439e-002, 2.796586e-002, -3.360420e-003, -2.062812e-002, -3.063177e-002, -1.424543e-002, 8.920198e-004, 2.967502e-003, -1.415333e-002, -1.986904e-002, -2.169539e-002, -1.071000e-002, 1.782765e-002, 3.417270e-002, 2.565099e-002, -3.113243e-004, -1.595308e-002, 6.676183e-004, 4.838650e-002, 7.454127e-002, 7.646298e-002, 6.958134e-002, 5.732421e-002, 4.097845e-002, 2.942351e-002, 1.548529e-002, -1.227615e-003, -1.003754e-002, 9.237275e-003, 3.111677e-003, 4.873505e-002, -3.653043e-003, -3.887496e-002, -3.635830e-002, -1.629769e-002, -4.030251e-004, 3.734025e-003, -1.184869e-002, -2.123854e-002, -2.177326e-002, -1.551990e-002, 8.097742e-003, 1.763854e-002, 5.730570e-003, -1.996133e-002, -3.807442e-002, -1.916363e-002, 3.601121e-002, 8.503644e-002, 1.063763e-001, 1.090802e-001, 8.409001e-002, 4.112201e-002, -8.705919e-003, -5.298066e-002, -6.758279e-002, -6.525997e-002, -2.056452e-002, 2.646087e-002, 5.851221e-002, -1.273888e-002, -3.997929e-002, -2.966107e-002, -4.472540e-003, 2.003542e-002, 3.548911e-002, 3.195219e-002, 2.049746e-002, 4.154143e-003, -6.454795e-003, -5.913531e-004, -2.633647e-003, -1.891775e-002, -4.787262e-002, -7.124701e-002, -5.530886e-002, -1.513162e-002, 2.640446e-002, 7.109415e-002, 9.488561e-002, 7.636737e-002, 2.588090e-002, -4.067334e-002, -1.075538e-001, -1.274698e-001, -1.086004e-001, -4.285384e-002, 3.796368e-002, 4.910630e-002, -1.413590e-002, -1.713036e-002, -1.809017e-002, -3.217571e-003, 2.981942e-002, 5.884868e-002, 6.823273e-002, 5.088974e-002, 2.076598e-002, -5.169533e-004, -1.242933e-002, -2.297060e-002, -3.863714e-002, -6.166890e-002, -7.713031e-002, -7.215740e-002, -5.787224e-002, -3.723797e-002, 3.401392e-003, 3.535871e-002, 3.151516e-002, 6.665671e-003, -2.607127e-002, -9.157089e-002, -1.165625e-001, -1.010241e-001, -


© ISO/IEC 2004 — All rights reserved

Copyright International Organization for Standardization
Provided by IHS under license with ISO
No reproduction or networking permitted without license from IHS
Not for Resale

2.865454e-002, 5.153133e-002, 2.728958e-002, -7.563813e-004, 3.939931e-004, -1.748046e-002, -5.133581e-003, 3.602625e-002, 5.448204e-002, 6.269077e-002, 4.013841e-002, 1.162441e-002, -9.001388e-003, -2.999345e-002, -4.105636e-002, -4.809774e-002, -5.821523e-002, -5.714593e-002, -5.340781e-002, -4.872742e-002, -3.663486e-002, -2.930886e-002, -1.817216e-002, -4.263660e-003, 2.767008e-003, 6.611614e-003, -2.351008e-002, -4.214102e-002, -3.641717e-002, 6.236151e-003, 6.212204e-002, 5.711086e-003, 1.611051e-002, -2.447973e-003, -3.717210e-002, -2.132230e-002, 3.155109e-003, 1.714774e-002, 2.544293e-002, 8.564098e-003, -1.435000e-002, -3.108623e-002, -4.689041e-002, -4.741631e-002, -3.931135e-002, -3.758098e-002, -2.813200e-002, -1.434084e-002, -8.019646e-003, -4.915112e-004, -9.407279e-003, -2.249865e-002, -1.837182e-002, 5.171572e-003, 3.258644e-002, 3.176381e-002, 2.713539e-002, 4.215207e-002, 5.001534e-002, 7.011434e-002, -1.163543e-003, 2.820792e-002, -1.106648e-002, -4.712830e-002, -3.595414e-002, -1.699387e-002, -8.913433e-003, 8.578664e-003, 1.379056e-002, 2.841463e-003, -1.476420e-002, -2.393634e-002, -1.742303e-002, -6.074104e-003, 2.672187e-003, 1.900669e-002, 3.983931e-002, 4.471172e-002, 3.737084e-002, 4.213012e-003, -2.548546e-002, -4.346963e-002, -2.371711e-002, 4.120947e-003, 3.123421e-002, 4.223772e-002, 7.830264e-002, 8.843236e-002, 6.235887e-002, -7.843740e-003, 2.560835e-002, -1.823790e-002, -3.866898e-002, -2.795669e-002, -2.077189e-002, -1.744029e-002, -8.511304e-003, 1.143396e-002, 2.223906e-002, 2.062672e-002, 2.623805e-002, 3.226034e-002, 3.805054e-002, 4.487835e-002, 6.072318e-002, 8.133865e-002, 6.370235e-002, 2.667062e-002, -2.043302e-002, -6.184044e-002, -8.433836e-002, -5.879746e-002, -1.692976e-002, 1.027976e-002, 7.124418e-003, 3.689019e-002, 7.533664e-002, 3.772319e-002, -1.571580e-002, 3.226819e-002, -5.299782e-003, -3.552987e-002, -2.422628e-002, 7.232074e-003, 6.505825e-003, -1.418740e-002, -1.735761e-002, -8.403874e-003, 1.436178e-002, 3.986009e-002, 5.514770e-002, 5.756948e-002, 5.718454e-002, 7.032496e-002, 7.807788e-002, 3.314294e-002, -9.322239e-003, -3.792526e-002, -4.498728e-002, -4.187277e-002, 8.248313e-003, 5.973580e-002, 6.581213e-002, 1.461263e-002, -1.232160e-002, 1.518182e-002, -1.244252e-002, -3.009974e-003, 3.592202e-002, -1.823443e-002, -4.126782e-002, -4.689961e-004, 4.010279e-002, 4.366625e-002, 1.035619e-002, -1.432838e-002, -2.740443e-002, -1.320042e-002, 1.753162e-002, 4.106859e-002, 3.203962e-002, 2.130912e-002, 2.742857e-002, 3.256797e-002, 1.098304e-002, 1.547079e-003, -3.460040e-003, -9.938349e-003, -8.352924e-003, 1.094868e-002, 4.926121e-002, 5.576811e-002, 9.195380e-003, -1.262660e-002, -4.847203e-003, -3.941334e-002, 2.313883e-002, 3.862486e-002, -2.744598e-002, -2.801062e-002, 1.991649e-002, 2.903651e-002, 4.426810e-003, -8.470377e-003, -1.666451e-002, -2.939219e-002, -4.283958e-002, -3.224609e-002, -8.478677e-003, -1.057395e-002, -2.664467e-002, -1.726786e-002, -1.516403e-002, -1.410123e-002, -2.013284e-002, -2.940760e-002, -1.402920e-002, 6.641376e-003, 1.250784e-002, 1.932895e-002, 1.098881e-002, -9.825008e-003, -3.088925e-002, 5.604296e-003, -2.688127e-003, 3.841454e-002, 1.537123e-002, -4.257830e-003, 3.359804e-002, 4.074965e-002, 1.909052e-002, -1.128593e-002, -2.044701e-002, -1.653347e-002, -5.348345e-003, -2.586657e-002, -5.625866e-002, -3.896067e-002, -3.460128e-002, -3.859684e-002, -1.953551e-002, -1.051908e-002, -7.664106e-003, 1.235791e-002, 4.220571e-002, 6.299177e-002, 3.965809e-002, 4.309415e-003, -1.751197e-002, -3.556578e-002, -3.018945e-002, -3.136805e-002, -1.734480e-002, 3.332844e-002, -1.785464e-002, -4.029229e-002, -6.299050e-003, -7.466893e-003, -3.747359e-002, -1.354613e-002, 3.142425e-002, 5.184539e-002, 1.070354e-002, -1.100268e-002, 8.450837e-003, -4.783375e-003, -3.149269e-002, -7.267921e-002, -6.757181e-002, -1.614606e-002, 3.464276e-002, 1.685058e-002, 1.771921e-002, 4.688439e-002, 4.214522e-002, 2.089285e-002, 2.205445e-002, -1.052748e-002, -7.110430e-002, -6.233677e-002, -4.248612e-002, -5.296345e-002, 1.633913e-002, -4.662632e-002, -7.758782e-002, -4.163581e-002, -5.304571e-002, -9.133323e-002, -7.163563e-002, 5.668674e-003, 5.255875e-002, -9.104420e-003, -7.810289e-002, -3.172124e-003, 3.351573e-002, 3.554576e-003, -3.929723e-002, -3.631523e-002, 5.609940e-003, 5.599028e-002, -2.186283e-002, -6.761434e-002, -4.817925e-002, -3.910599e-002, -3.842539e-002, 3.490703e-002, 8.457019e-002, -5.735715e-002, -6.053535e-002, -8.469278e-003, -4.472531e-002, -1.718448e-002, -1.957673e-002, -3.240980e-002, 2.639458e-002, 4.766898e-002, 6.825813e-002, 3.135538e-002, -2.960015e-002, 1.751855e-002, 6.984863e-002, -3.621825e-002, -9.201114e-003, 6.066196e-002, 2.801275e-002, -1.433843e-003, -2.347494e-003, 3.475159e-003, 3.530201e-002, -2.617944e-003, -5.565363e-002, 6.040630e-002, 5.558410e-002, -1.012379e-001, -5.426305e-002, 4.986583e-002, -4.613716e-002, -6.220014e-003, 3.691899e-002, -5.613623e-003, -8.673570e-003, 3.317359e-002, 2.522008e-002, 7.287898e-002, 4.763796e-002, -7.787557e-003, -2.399037e-002, -5.151691e-002, -3.907022e-002, -9.158364e-003, -2.217925e-002, -5.931969e-003, 5.972812e-002, 3.820221e-002, 2.549541e-002, 2.195850e-002, 2.124511e-002, 1.189699e-002, 1.715918e-002, 8.043466e-004, 3.718145e-002, 5.595247e-002, 4.612847e-003, -8.160303e-003, -3.087972e-004, -1.086621e-002, 7.544631e-002, 1.266442e-001, 6.037787e-002, 2.998174e-002, 5.765998e-002, 6.465433e-003, 8.038809e-003, -2.054728e-002, -5.706311e-002, -6.612159e-002, -5.883102e-002, -2.422400e-002, 3.523802e-003, -2.043671e-002, -3.651413e-002, 1.108322e-002, 8.425432e-003, 2.089479e-002, 1.395818e-002, 2.347873e-002, 1.183592e-002, -2.132428e-002, -3.801342e-003, 2.087134e-002, 2.598677e-002, 7.607404e-003, -1.354483e-002, -1.413865e-002, -1.290997e-002, 3.162124e-002, 7.074626e-002, 1.810499e-002, 1.090941e-002, 3.621962e-002, 8.380825e-003, -2.197803e-002, -7.572728e-003, 7.507557e-003,

© ISO/IEC 2004 — All rights reserved


Copyright International Organization for Standardization
Provided by IHS under license with ISO
No reproduction or networking permitted without license from IHS
Not for Resale

2.626534e-002, 4.727532e-002, 5.589893e-002, 2.745739e-002, -4.729004e-002, -7.132706e-002, -2.306671e-002, -2.254629e-002, 1.802801e-002, 9.786761e-003, 1.086014e-002, 2.259441e-002, -4.372892e-002, -6.265326e-002, -8.606612e-003, 3.038709e-002, 4.235435e-002, 3.249785e-002, 2.354911e-002, 1.108523e-002, 3.212634e-003, 3.851536e-003, -3.285101e-002, -1.613689e-002, -4.544518e-003, -9.834709e-003, -2.721289e-002, -5.229384e-003, 2.012799e-002, 4.367293e-002, 5.141509e-002, 2.918716e-002, -3.011180e-002, -9.351521e-002, -5.228754e-002, -1.791128e-002, -3.028369e-002, 2.145643e-002, 2.378570e-002, -7.845773e-003, 1.907125e-002, -3.775821e-003, -9.855115e-002, -9.940648e-002, -3.924960e-002, 1.095593e-002, 2.809253e-002, 2.277699e-002, 4.447973e-003, -2.788157e-002, -4.865502e-002, -5.296392e-002, -2.107968e-002, -2.891428e-002, -2.891244e-002, -1.738031e-002, 7.926523e-003, 1.712710e-002, 2.315511e-002, 4.979088e-003, -2.942276e-002, -5.199389e-002, -2.223276e-002, 4.277537e-002, 9.007114e-004, -2.057319e-002, 2.394355e-002, 2.051023e-002, -2.476508e-002, -1.371660e-002, 3.577381e-002, -3.344780e-003, -8.133891e-002, -9.567076e-002, -6.116894e-002, -2.967966e-002, -5.887624e-003, 2.372978e-003, -1.515668e-002, -3.623687e-002, -4.238809e-002, -1.135789e-002, -4.468020e-002, -2.074610e-002, 4.463203e-003, 5.722982e-002, 6.929359e-002, 6.179072e-002, 4.436243e-002, 3.245647e-002, 4.164332e-002, 8.707036e-002, 8.474986e-002, -1.005500e-002, -2.401394e-002, 2.239392e-002, 1.231558e-002, -3.387487e-002, -5.259901e-002, 1.736547e-002, 5.887779e-002, 4.595663e-002, 1.831277e-003, -3.686626e-003, 1.464655e-002, 3.704512e-002, 5.351414e-002, 3.915456e-002, 2.786702e-003, -2.104935e-002, -1.113090e-002},
{-4.600555e-003, -9.641079e-004, -5.856127e-004, -8.263334e-003, -1.362103e-002, -1.961217e-002, 2.541636e-003, 2.503560e-002, 3.255249e-002, 2.194979e-002, -8.553492e-003, -3.323045e-002, -3.689016e-002, -2.416972e-002, -8.954888e-003, 9.798635e-003, 2.820815e-002, 3.946524e-002, 3.248789e-002, 1.816394e-002, 8.060782e-003, 7.948580e-003, -9.295922e-003, -3.847621e-002, -2.677646e-002, -8.487274e-003, 9.940242e-004, -7.517843e-003, 1.657343e-003, -3.322627e-002, -9.145899e-003, -1.243336e-003, -1.607767e-002, -3.972045e-002, -2.251869e-002, 1.472910e-002, 4.669303e-002, 2.879117e-002, -7.461629e-003, -3.805674e-002, -5.143585e-002, -4.967642e-002, -3.577640e-002, -1.826006e-002, 1.439644e-002, 3.800941e-002, 4.377259e-002, 3.266389e-002, 8.617537e-003, -2.553306e-002, -3.154185e-002, -1.645128e-002, -2.224581e-002, -3.870106e-002, -3.342741e-002, 8.762746e-003, -6.549986e-003, -2.262930e-002, -1.517376e-002, 2.060450e-002, 1.847581e-002, -1.175372e-002, -2.527651e-002, 6.754842e-003, 4.659927e-002, 5.532529e-002, 3.407583e-002, 9.605897e-003, -6.448024e-003, -2.077371e-002, -1.836664e-002, -7.765804e-003, 1.934147e-003, 2.849811e-002, 4.684130e-002, 5.173652e-002, 5.028931e-002, 3.332332e-002, -3.713860e-003, -4.526083e-002, -2.822168e-002, -6.772067e-003, -8.971254e-003, -3.265060e-002, -1.166800e-002, 2.222317e-002, -6.761334e-003, 2.310296e-002, 3.689912e-002, 2.660814e-002, -1.271202e-003, -1.194776e-002, 1.352095e-002, 2.431533e-002, 2.740438e-002, 1.996984e-002, 7.375446e-003, -3.688144e-003, -1.476873e-002, -1.703882e-002, -1.513252e-002, -1.054683e-002, 2.149326e-003, 1.853470e-002, 3.307619e-002, 4.125082e-002, 4.439203e-002, 2.986807e-002, -8.943927e-003, -2.519718e-002, -7.867275e-003, 2.078445e-002, 7.950647e-003, -1.889501e-002, 8.095908e-003, 2.000799e-002, 1.821433e-002, 2.552537e-002, 1.762461e-002, 4.607769e-003, 4.074819e-003, 2.710404e-003, -6.618333e-003, -1.251234e-002, -3.411856e-003, -4.094612e-003, -2.367868e-002, -4.080844e-002, -4.866611e-002, -4.709597e-002, -3.933258e-002, -3.131200e-002, -2.233243e-002, -8.916849e-003, 9.465597e-003, 3.156855e-002, 3.948557e-002, 2.104827e-002, -8.263766e-003, -3.790200e-003, 2.101807e-002, 2.420721e-002, 6.440214e-003, -5.235344e-003, 2.395375e-002, -1.213403e-002, 4.710220e-003, 8.437448e-003, 1.347462e-002, 6.248534e-003, -1.088728e-002, -1.839763e-002, 2.707385e-003, 3.399782e-002, 2.205213e-002, -1.248454e-002, -4.364428e-002, -5.673607e-002, -4.524228e-002, -2.480662e-002, -1.327746e-002, -2.350057e-002, -2.387420e-002, -1.225889e-002, 1.332515e-002, 2.633693e-002, 1.037412e-002, -1.762613e-002, -1.719410e-002, 6.331452e-003, 1.192274e-002, 1.029883e-002, 5.046221e-003, 1.909834e-002, -2.599563e-002, -3.196348e-005, 7.108096e-003, 1.561505e-002, 6.917259e-003, -1.321986e-002, -1.405619e-002, 2.830141e-002, 8.581963e-002, 7.636098e-002, 2.361186e-002, -2.073749e-002, -3.966316e-002, -1.515217e-002, 2.358812e-002, 3.751168e-002, 5.898900e-003, -1.715023e-002, -1.380904e-002, -7.870415e-003, -7.497921e-003, -1.252978e-002, -3.496351e-002, -3.478353e-002, -5.122378e-003, 9.830057e-003, 1.834212e-003, 6.213746e-003, 2.102862e-002, -3.269148e-002, -3.046541e-003, 5.087018e-003, 9.929094e-003, -7.398321e-003, -3.338218e-002, -3.712093e-002, 2.670485e-002, 9.567600e-002, 8.421794e-002, 2.326887e-002, -2.156925e-002, -2.661879e-002, 1.015690e-002, 5.970574e-002, 7.540852e-002, 3.275073e-002, -6.214207e-003, -1.788025e-002, -1.717084e-002, -1.387909e-002, -9.382112e-003, -2.615769e-002, -2.393916e-002, 1.149886e-002, 3.509919e-002, 2.087242e-002, 3.252158e-003, 1.353811e-002, -3.930755e-002, -1.713147e-002, -3.154708e-003, 7.690893e-003, -2.405488e-002, -5.835825e-002, -6.121050e-002, 3.644324e-003, 6.423893e-002, 5.758709e-002, -5.342297e-004, -5.476813e-002, -4.646888e-002, -4.116217e-004, 6.062042e-002, 7.987316e-002, 3.501403e-002, -3.852108e-003, -1.929227e-002, -1.614240e-002, -1.491182e-003, 1.875458e-002, 3.774835e-003, 4.229859e-003, 2.476805e-002, 4.308309e-002, 2.082563e-002, -6.798818e-003, -1.030781e-002, -4.824836e-002, -3.550557e-002, -5.992619e-003, 4.453006e-003, -2.551869e-002, -6.035571e-002, -6.309943e-002, -8.703940e-003, 4.427486e-002, 3.897464e-002, -1.642642e-002, -


© ISO/IEC 2004 — All rights reserved

Copyright International Organization for Standardization
Provided by IHS under license with ISO
No reproduction or networking permitted without license from IHS
Not for Resale

8.321092e-002, -8.232707e-002, -4.413414e-002, 9.870857e-003, 3.691959e-002, 1.363216e-002, -2.030664e-002, -1.446663e-002, 1.520834e-003, 2.254975e-002, 4.567259e-002, 3.520971e-002, 1.260357e-002, 2.295908e-002, 3.739723e-002, 1.064411e-002, -2.257338e-002, -2.867537e-002, -4.186229e-002, -3.898190e-002, 4.083405e-003, 1.174092e-002, -2.090294e-002, -5.052598e-002, -4.282367e-002, 5.138363e-003, 5.359276e-002, 4.503804e-002, 4.818548e-004, -6.147122e-002, -7.604167e-002, -6.256496e-002, -3.494206e-002, -1.102078e-002, -9.128098e-003, -2.850523e-002, -2.507946e-002, 3.388502e-003, 3.700045e-002, 5.691744e-002, 3.625805e-002, -7.089617e-003, -1.868769e-002, 2.241721e-003, 1.645561e-003, -3.684912e-002, -3.410373e-002, -1.440398e-002, -1.644039e-002, 2.387913e-002, 2.494030e-002, -2.333162e-002, -4.470997e-002, -3.522053e-002, 3.008624e-003, 6.368809e-002, 7.904862e-002, 5.359184e-002, -3.202283e-003, -5.082897e-002, -5.869323e-002, -3.843496e-002, -1.440877e-002, 4.124962e-003, -1.031438e-003, -1.337745e-002, 4.217282e-003, 2.149196e-002, 4.111511e-002, 8.799788e-003, -4.789416e-002, -6.937478e-002, -3.989425e-002, -1.625436e-002, -4.141717e-002, -3.723420e-002, 2.129667e-002, 8.813896e-003, 5.294297e-002, 4.651102e-002, -1.560007e-002, -4.673790e-002, -4.150206e-002, -6.641034e-003, 5.488348e-002, 8.699462e-002, 8.254827e-002, 4.086942e-002, -1.607497e-002, -4.161502e-002, -2.365973e-002, 4.049019e-003, 3.363899e-002, 3.796240e-002, 1.183550e-002, -8.291128e-003, -1.027362e-002, 6.458591e-003, -8.833468e-003, -5.019575e-002, -7.278391e-002, -4.828152e-002, -2.345602e-002, -3.193816e-002, -2.546908e-002, 5.510261e-002, 2.424809e-002, 5.835827e-002, 5.136251e-002, 6.207410e-003, -1.326527e-002, -1.991587e-002, -1.692766e-002, -6.275067e-003, 2.164148e-002, 3.883480e-002, 3.748494e-002, 8.858615e-003, -1.379375e-002, 1.466789e-003, 2.400806e-002, 4.469547e-002, 2.749670e-002, -5.842522e-003, -5.063884e-002, -6.784451e-002, -3.061692e-002, -4.358506e-003, -7.422977e-003, -1.069415e-002, 1.414216e-002, 2.080738e-002, 1.301155e-003, 6.320088e-003, 4.302528e-002, -3.175843e-002, -3.695928e-002, -1.886811e-002, 2.260076e-003, 2.493814e-002, 3.333889e-002, 2.973854e-002, -1.504455e-002, -4.200277e-002, -3.449278e-002, 9.563496e-003, 3.741318e-002, 3.151881e-002, 3.837796e-002, 5.966345e-002, 4.111372e-002, -1.418531e-002, -5.444414e-002, -7.108581e-002, -4.882814e-002, -2.381509e-003, 3.017628e-002, 2.100911e-002, 7.011334e-003, 4.817318e-002, 7.733660e-002, 3.248722e-002, 3.868079e-002, 1.027876e-002, -8.371400e-002, -5.758699e-002, -1.419950e-002, 2.784619e-002, 4.657430e-002, 4.738108e-002, 4.019062e-002, -4.742281e-004, -5.278158e-002, -6.962079e-002, -1.370746e-002, 3.883721e-002, 5.463819e-002, 5.278857e-002, 5.222226e-002, 1.421164e-002, -6.322917e-002, -7.815058e-002, -1.409031e-002, 4.338370e-002, 6.406892e-002, 4.875517e-002, 8.683098e-003, -3.560067e-002, -1.234861e-002, 5.654848e-002, 4.283782e-002, 4.561168e-002, 7.761807e-003, -1.065143e-002, 2.477109e-002, 2.803505e-002, 1.977186e-002, -1.120096e-002, -2.434645e-002, 2.893528e-003, 1.996889e-002, 3.940731e-003, -5.371234e-002, -6.212886e-002, -3.612820e-002, 2.159599e-003, 1.828774e-002, -3.722450e-003, -5.537812e-002, -8.316793e-002, -3.261141e-002, 2.887960e-002, 3.090407e-002, 7.849226e-003, -1.164786e-002, -1.788311e-002, -3.272879e-002, -3.102174e-002, -2.131102e-003, 1.026947e-003, 2.498344e-002, 3.942592e-002, 2.628833e-002, 5.813677e-003, 5.425459e-004, -4.788164e-003, -4.384466e-002, -4.712451e-002, -3.885172e-004, 6.241903e-002, 9.874814e-002, 4.738957e-002, -5.373544e-002, -7.310183e-002, -1.167608e-002, 2.644779e-002, -2.121665e-002, -6.230856e-002, -1.387132e-002, 2.987210e-002, 1.196030e-002, -2.408218e-002, -2.612204e-002, -1.350219e-002, -1.596352e-002, -3.081878e-002, -3.720615e-002, -2.139483e-002, -1.266025e-002, 3.376481e-002, -2.393634e-002, -1.868506e-002, 3.132527e-002, 7.224018e-002, 5.762115e-002, 4.097089e-003, -6.043114e-002, -9.174587e-002, -6.244692e-002, 7.714484e-003, 3.113475e-002, -1.828802e-002, -3.393977e-002, 6.015176e-002, 1.119111e-001, 3.468823e-002, -8.499274e-003, 5.483945e-002, 4.341370e-002, -3.349148e-002, -1.652651e-002, 3.417245e-002, 7.236033e-002, 7.743511e-002, 6.999669e-002, 8.445896e-003, -5.845546e-002, -3.990423e-002, 4.107393e-002, -8.818699e-002, -3.011391e-002, 2.387680e-002, 3.665062e-002, 1.364209e-002, 2.512150e-002, 3.846681e-002, 2.901153e-003, -5.788112e-002, -7.670237e-002, -5.713518e-002, -2.271541e-002, 1.427646e-003, 6.780148e-002, 6.543611e-002, -3.091135e-002, -3.873391e-002, 6.799607e-002, -9.148892e-003, -1.431944e-001, -2.322757e-002, 3.039392e-002, -1.467824e-002, -7.064002e-002, 5.222738e-002, 5.093709e-002, -2.653266e-002, -3.329400e-002, 4.924003e-003, 1.399563e-002, 3.543640e-003, -3.007876e-002, -5.147642e-002, 1.869425e-002, 3.542372e-002, 1.195089e-003, 2.944182e-002, 2.875368e-002, -3.410541e-002, -1.171089e-002, -1.573986e-002, -2.923842e-002, 6.137109e-003, -7.082696e-003, -8.764203e-002, -9.761261e-002, 8.963232e-002, 1.929654e-002, -6.060133e-002, 1.547627e-002, 3.249529e-002, 1.148721e-002, 1.795045e-002, 4.181604e-002, 1.854554e-003, -1.718553e-002, 1.643305e-002, 1.657174e-002, 7.205173e-002, 3.700327e-002, -3.828124e-002, -5.831497e-002, -2.779242e-002, -4.726119e-004, 1.756028e-003, 2.710801e-002, 3.184244e-002, 4.313870e-002, 7.902497e-002, 1.043291e-002, -6.301331e-002, -1.325558e-002, -5.939936e-003, -4.236348e-002, -6.964795e-002, 8.479283e-002, 8.990728e-002, 1.852957e-002, 1.263073e-003, -7.351403e-003, -4.620655e-003, 2.350577e-002, 3.272226e-003, -4.342047e-002, -4.923613e-002, 1.166671e-002, 2.483712e-002, 7.548767e-002, 4.019272e-002, -7.626426e-003, -2.561325e-002, -2.261365e-002, -1.864782e-002, -5.573171e-003, 1.459742e-002, 2.460264e-002, 6.866513e-002, 9.440861e-002, -9.357446e-003, -5.720888e-002, -5.750837e-003, 9.370298e-003, 3.073076e-003, -6.969901e-003, 3.915357e-002,

© ISO/IEC 2004 — All rights reserved


Copyright International Organization for Standardization
Provided by IHS under license with ISO
No reproduction or networking permitted without license from IHS
Not for Resale

1.018675e-001, 5.738366e-002, 1.531070e-002, -4.845816e-003, -9.646599e-003, -1.574537e-002, -4.571574e-003, -2.237295e-002, -2.869120e-002, 2.336207e-002, 2.399763e-002, 3.762411e-002, 3.543308e-002, 4.378950e-003, -1.694733e-002, -2.171661e-002, -2.020470e-002, -1.237588e-002, -8.200350e-003, -1.162325e-003, 3.723583e-002, 4.084701e-002, -2.501137e-002, -2.349881e-002, -1.555981e-003, 1.446012e-003, 1.212847e-002, 4.180092e-002, 3.060541e-003, 3.664720e-002, 3.555073e-002, 1.373473e-002, -8.337899e-003, -1.423241e-002, -1.347026e-002, 1.507159e-002, 2.123230e-002, 1.568864e-002, 1.920244e-002, 9.925184e-003, -3.934647e-003, 2.253125e-002, 1.906834e-002, 8.947701e-004, -2.823251e-002, -5.096287e-002, -5.839234e-002, -5.653059e-002, -3.357230e-002, 1.559475e-002, 1.311606e-002, -2.547785e-002, -4.509692e-003, 3.555048e-003, -1.888310e-002, -2.037336e-002, 4.665389e-002, 4.319369e-002, -1.228622e-002, -2.306552e-002, -2.423532e-002, -2.794064e-002, -3.000375e-002, -1.302750e-002, 2.225600e-002, 4.756854e-002, 3.002743e-002, 8.266871e-003, -9.783770e-004, -1.518718e-002, -6.307419e-003, 2.854077e-002, 9.784852e-003, -2.164382e-002, -5.009010e-002, -6.272741e-002, -4.005544e-002, 1.179733e-002, 5.983162e-002, 1.492435e-002, -1.943774e-002, -5.024617e-003, -7.833475e-003, -2.273051e-002, -3.333321e-002, 6.364282e-003, 7.475753e-002, 1.707111e-002, -4.349619e-002, -6.673989e-002, -6.998730e-002, -5.909729e-002, -3.803441e-002, 5.249122e-003, 3.864991e-002, 3.412039e-002, -1.020532e-002, -8.981347e-003, -2.591075e-002, -2.009920e-002, 1.715194e-002, 3.822285e-002, 8.868425e-003, -9.359826e-003, -3.460238e-003, 3.391875e-002, 8.652303e-002, 8.292567e-002, 1.713564e-002, -1.286104e-002, -1.754803e-002, -6.124610e-004, 2.283216e-003, -3.118642e-002, -4.374468e-002, 4.336886e-002, 8.638737e-002, 6.506112e-003, -6.085932e-002, -8.049109e-002, -7.721753e-002, -4.899220e-002, -1.345298e-003, 2.650393e-002, 4.812250e-003, -1.457311e-002, -7.681750e-004},
{-3.736211e-003, 5.508100e-003, -1.332278e-002, -3.922568e-002, -3.525201e-002, -1.608079e-003, 1.697375e-002, 8.053745e-003, 4.582434e-004, 1.739856e-002, 3.454935e-002, 4.094598e-002, 4.421738e-002, 2.648208e-002, 6.345257e-003, -2.078987e-002, -3.707166e-002, -3.152339e-002, -3.622386e-003, 1.692557e-002, 2.415437e-002, 1.220851e-002, -3.786313e-003, -2.852624e-002, -6.268256e-002, -5.583527e-002, -1.052608e-002, 2.365024e-003, -6.189819e-002, 4.178895e-002, 1.782516e-002, -1.115897e-002, -5.888497e-003, 2.081308e-002, 1.649254e-002, -3.191075e-003, -5.011761e-003, 1.896322e-002, 4.787009e-002, 5.770212e-002, 5.736356e-002, 4.636882e-002, 1.782039e-002, -1.048219e-002, -4.027702e-002, -4.801045e-002, -3.886734e-002, -1.527467e-002, 6.827478e-003, 2.426518e-002, 2.820155e-002, 1.275416e-002, 7.463637e-003, -7.746781e-003, -1.985788e-002, -1.785938e-002, 2.396732e-002, 3.875814e-003, 2.823725e-002, 3.307112e-003, -5.401138e-003, 7.694132e-003, -7.743830e-003, -2.555061e-002, -1.338524e-002, 5.372792e-003, 1.953247e-002, 3.693770e-002, 4.436363e-002, 4.200806e-002, 2.378165e-002, -4.319683e-004, -2.492915e-002, -3.860299e-002, -3.193455e-002, -1.458851e-002, -6.692106e-003, 8.511214e-003, 1.485674e-002, 2.046522e-002, -4.305623e-003, -2.076965e-002, -7.017872e-003, 1.546102e-002, 1.088878e-002, 1.285391e-002, 3.377775e-002, 5.596081e-003, 5.447706e-003, 9.890170e-003, -2.297756e-002, -4.532668e-002, -2.726316e-002, -9.218043e-003, -6.311789e-003, -1.276405e-002, 9.744403e-003, 4.361301e-002, 5.783277e-002, 3.932512e-002, 1.392314e-002, -1.077518e-002, -1.407354e-002, -3.518936e-003, 1.665050e-002, 1.841615e-002, 1.970631e-002, 1.779199e-002, 2.014835e-002, -2.007025e-003, -4.344041e-002, -5.505577e-002, -2.638997e-003, 3.287264e-002, 3.118114e-002, 3.250492e-002, -3.325924e-003, 1.214737e-002, -4.366316e-003, -4.210209e-002, -3.138150e-002, -1.673056e-002, -3.274105e-002, -6.462944e-002, -7.104496e-002, -2.814261e-002, 3.022357e-002, 5.333260e-002, 2.828929e-002, -1.103672e-002, -4.251731e-002, -2.707276e-002, -2.854094e-003, 2.075610e-002, 2.502798e-002, 1.998711e-002, 1.475612e-002, 1.371961e-002, 3.712755e-003, -3.473039e-002, -6.543978e-002, -3.355970e-002, 1.394951e-002, 2.296953e-002, 2.813771e-002, -8.816876e-003, 7.071856e-003, -1.422705e-002, -1.395445e-002, 8.973696e-003, -4.924473e-003, -5.573352e-002, -8.827553e-002, -8.810499e-002, -3.569999e-002, 3.330895e-002, 5.359048e-002, 8.484162e-003, -5.415952e-002, -9.552368e-002, -7.966731e-002, -3.515089e-002, 5.360225e-003, 2.456357e-002, 2.248384e-002, 1.904830e-002, 1.642141e-002, 1.263954e-002, -7.565196e-003, -3.558389e-002, -1.788355e-002, 1.330340e-002, 1.054743e-002, -1.547902e-003, -1.709346e-002, 2.318216e-003, 6.219278e-003, 2.193998e-002, 3.144297e-002, 9.777546e-003, -1.384957e-002, -3.092229e-002, -4.329700e-002, -6.860242e-004, 6.748820e-002, 6.661025e-002, 1.542721e-002, -5.458778e-002, -1.054541e-001, -9.124575e-002, -3.690033e-002, 9.993860e-003, 3.132842e-002, 3.075860e-002, 1.933616e-002, 1.073565e-002, 2.173660e-002, 1.475717e-002, -9.680516e-003, 1.072406e-002, 3.924766e-002, 1.283483e-002, -3.601721e-002, -4.783074e-003, 1.705904e-002, 2.429466e-002, 1.921602e-002, 3.066457e-002, 3.520678e-002, 3.519198e-002, 1.676877e-002, -6.950346e-003, 1.521289e-002, 7.628043e-002, 7.737745e-002, 3.257682e-002, -1.999771e-002, -6.886535e-002, -6.376525e-002, -1.016158e-002, 3.124553e-002, 4.282344e-002, 3.762203e-002, 1.509584e-002, 2.933167e-004, 5.151002e-003, 1.192388e-002, -3.041285e-003, 3.931655e-003, 5.851469e-002, 3.894017e-002, -4.346637e-002, 8.486467e-003, 2.826421e-002, 7.004650e-003, -9.000471e-003, 2.559355e-002, 5.072716e-002, 4.389392e-002, 1.236096e-002, -2.672766e-002, -1.706376e-002, 3.800463e-002, 5.962589e-002, 3.943005e-002, 1.702257e-002, -1.555836e-002, -1.178802e-002, 2.863086e-002, 4.902218e-002, 4.945971e-002, 3.398279e-002, 5.099710e-004, -2.180345e-002, -1.494532e-002, 2.846254e-003, -


© ISO/IEC 2004 — All rights reserved

Copyright International Organization for Standardization
Provided by IHS under license with ISO
No reproduction or networking permitted without license from IHS
Not for Resale

2.272963e-003, -1.249065e-002, 4.296667e-002, 5.494843e-002, -3.270000e-002, 9.330168e-003, 1.495617e-002, -1.371947e-002, -9.743665e-003, 2.581599e-002, 4.165522e-002, 2.734999e-002, -2.647886e-002, -7.471189e-002, -7.981369e-002, -3.466463e-002, 1.010154e-002, 1.958596e-002, 2.192320e-002, 1.111569e-002, 1.304270e-002, 2.496561e-002, 4.428232e-002, 3.754593e-002, 1.621817e-002, -9.488999e-003, -3.302918e-002, -1.582162e-002, 2.858976e-003, 6.922448e-003, -2.134315e-002, 3.412916e-003, 3.305236e-002, -2.955353e-002, 3.393418e-003, 8.008926e-003, -9.046191e-003, 9.618678e-003, 3.105960e-002, 2.999808e-002, -1.647392e-003, -5.549149e-002, -1.116802e-001, -1.214542e-001, -8.709658e-002, -2.273107e-002, 1.314638e-002, 2.537729e-002, 1.797109e-002, 3.582203e-003, -1.430269e-002, -6.707587e-003, -6.887064e-003, -1.918924e-002, -3.081514e-002, -4.273281e-002, -2.179460e-002, 1.018473e-002, 2.332726e-002, -7.260981e-003, -2.779263e-002, -5.308242e-003, -3.833716e-002, -1.328817e-002, 1.500999e-002, 1.111945e-002, 3.458113e-002, 5.121721e-002, 3.997688e-002, 1.012498e-002, -2.107344e-002, -6.917238e-002, -9.020495e-002, -7.468141e-002, -2.649449e-002, 2.482811e-002, 3.516845e-002, 2.326977e-002, -2.275725e-003, -3.071277e-002, -4.481603e-002, -2.888473e-002, -2.574558e-002, -3.320127e-002, -4.582232e-002, -1.990795e-002, 1.889735e-002, 4.479692e-002, 1.983086e-002, -2.222910e-002, -2.227199e-002, -5.839485e-002, -2.695548e-002, 1.123117e-002, 3.046405e-003, 6.278269e-003, 2.756041e-002, 3.352542e-002, 3.825674e-002, 4.560601e-002, 2.769229e-002, -2.899414e-003, -2.512098e-002, -5.105622e-003, 3.819272e-002, 5.152275e-002, 3.839629e-002, 1.565034e-002, -1.294699e-002, -3.657531e-002, -1.500064e-002, 1.134403e-002, 3.239046e-003, -2.623524e-002, -3.019074e-002, -9.358399e-003, 2.198551e-002, 3.380191e-002, 3.647692e-003, -9.193055e-003, -5.562097e-002, -3.889076e-002, -2.011027e-002, -5.657796e-002, -6.898842e-002, -4.815185e-002, -1.538022e-002, 2.618973e-002, 7.145184e-002, 7.419245e-002, 3.723449e-002, -2.976691e-003, -7.102076e-003, 2.350631e-002, 5.422752e-002, 5.177827e-002, 3.551717e-002, 1.287254e-002, -1.103564e-002, 1.003708e-003, 4.040354e-002, 4.786060e-002, 1.394476e-002, -2.492495e-002, -4.922932e-002, -5.120111e-002, -2.621841e-002, -1.341339e-002, 6.505634e-004, -3.614859e-002, -3.841345e-002, -2.175645e-002, -2.264948e-002, -3.643872e-002, -4.861488e-002, -2.846250e-002, 9.565808e-003, 4.292850e-002, 4.437061e-002, 5.923997e-003, -3.818827e-002, -4.796493e-002, -1.317367e-002, 3.638404e-002, 5.693555e-002, 3.851205e-002, 2.904403e-002, 1.037420e-003, 2.891278e-003, 3.803693e-002, 5.502309e-002, 5.193630e-002, 2.762096e-002, -6.867306e-003, -3.995825e-002, -4.824480e-002, -3.504785e-002, -1.785498e-003, -1.143186e-002, -1.901505e-002, 6.069602e-002, 7.826312e-002, 4.089427e-002, -5.337154e-003, -3.669508e-002, -2.893645e-002, 4.410502e-003, 3.621769e-002, 2.844065e-002, -2.558089e-002, -7.551434e-002, -4.751522e-002, -8.790005e-003, 2.176670e-002, 5.670015e-003, -1.862114e-002, -2.073089e-002, -1.099347e-002, 9.860610e-003, 1.655739e-002, 7.184590e-003, -4.019620e-003, 4.347243e-003, 2.083501e-002, 2.862643e-002, 1.948913e-002, 1.758234e-002, 1.476672e-003, 3.609469e-003, 6.783889e-002, 3.357837e-002, 1.201647e-002, 1.890695e-002, 9.365574e-003, -5.697508e-003, -1.900545e-003, 2.205112e-002, 4.395088e-002, 2.725503e-002, -2.420368e-002, -4.970640e-002, -4.584990e-002, -3.375042e-002, -4.684047e-002, -5.083664e-002, -1.097704e-002, 2.954115e-002, 2.726975e-002, 3.171715e-003, -2.180994e-002, -5.023150e-002, -4.079156e-002, -4.038549e-005, 4.199704e-002, 5.041063e-002, 3.403515e-002, 1.853645e-002, -2.103735e-002, -1.944768e-002, -4.504088e-003, 3.688765e-002, 5.562564e-002, 4.046015e-002, 3.091368e-002, 2.100283e-003, -1.792401e-002, -3.114131e-002, -3.077270e-002, -3.802226e-002, -5.578458e-002, -5.633215e-002, -4.867062e-002, -8.024227e-002, -7.295074e-002, -1.453974e-002, 1.127338e-002, 1.007399e-003, -2.513768e-002, -4.342302e-002, -3.101684e-002, -5.601598e-003, 5.245439e-003, 2.338198e-002, 1.210892e-002, -1.448785e-002, 1.533974e-003, -5.800302e-002, -2.984001e-002, -9.624362e-003, -5.303784e-003, -6.006388e-003, 5.836268e-003, 1.188460e-002, 2.531382e-002, 1.577908e-002, -3.358702e-004, -2.045128e-003, 1.169533e-002, 1.375624e-002, 4.096070e-002, 4.666181e-002, -5.465140e-003, -2.716126e-002, 1.476100e-002, 1.420648e-002, -6.883501e-003, -2.840415e-002, -6.191430e-002, -5.883232e-002, -1.667093e-002, 3.878706e-002, 5.287761e-002, 3.555235e-002, -5.846100e-003, -3.023345e-002, 4.683734e-003, -1.497253e-002, -4.789913e-002, -7.207512e-002, -2.053460e-002, 2.128798e-002, 3.343363e-002, 5.399976e-002, 3.091592e-002, 2.231378e-003, 2.531019e-002, 6.624683e-002, 1.073606e-001, 1.685294e-001, 1.899169e-001, 1.428820e-001, 4.710940e-002, 2.844588e-002, 2.644412e-002, 2.762739e-002, 4.697402e-002, -2.246298e-003, -5.442603e-002, -2.632295e-002, 1.284235e-002, 9.178054e-004, 1.682780e-002, 3.857989e-002, 7.174307e-003, 9.367522e-002, 6.746808e-002, 3.407530e-002, 2.479919e-002, -6.201807e-004, -7.010936e-002, -3.391203e-002, 5.038148e-002, 2.386520e-002, -3.862836e-002, 1.992411e-002, 1.722266e-002, 9.671000e-003, 3.561584e-002, 4.187576e-002, 7.103979e-002, 8.918090e-003, -1.405887e-002, 2.671184e-002, 6.131672e-004, 7.888975e-003, 5.433371e-002, 8.268520e-003, 3.074706e-002, -1.751796e-002, -4.323122e-002, -1.486037e-002, 2.118828e-002, 7.056766e-003, 6.473461e-002, 3.833070e-002, 5.249797e-002, 6.236892e-002, 7.008639e-003, -6.875336e-002, -6.343608e-002, -1.933404e-002, -2.902079e-003, 1.281887e-002, 7.350691e-003, -5.521746e-002, -7.363575e-002, -5.703216e-002, -5.345618e-002, -2.923173e-002, -4.775159e-002, -5.933480e-002, 2.168274e-002, 1.396865e-002, -2.108900e-002, -7.650765e-003, -2.394938e-002, -2.289149e-002, 1.443072e-002, 1.930421e-002, -1.547359e-003, -2.500790e-003, -2.293809e-002, 3.319218e-002, -9.278711e-003,

© ISO/IEC 2004 — All rights reserved


Copyright International Organization for Standardization
Provided by IHS under license with ISO
No reproduction or networking permitted without license from IHS
Not for Resale

1.164322e-002, 2.753614e-002, -8.715966e-003, -4.720029e-002, -5.324702e-002, -1.509044e-002, 2.521611e-002, 3.995300e-002, -1.395663e-002, -1.269991e-001, -6.607532e-002, -5.208686e-002, -4.526450e-002, -3.492066e-002, -4.494053e-002, -9.833737e-002, 6.061297e-003, 2.827046e-002, -6.053314e-003, -2.566219e-002, -4.777211e-002, -4.409858e-002, -6.523705e-003, 2.686617e-002, 1.137384e-002, -1.317437e-002, -2.970357e-002, 1.372844e-002, -2.972067e-002, -1.905926e-002, 9.184491e-003, -5.853653e-004, -5.609033e-003, 4.729139e-003, 3.664519e-002, 5.806883e-002, 2.701514e-002, -6.591411e-002, -1.036652e-001, -2.417276e-002, -1.318809e-002, -1.300057e-002, -1.917277e-003, -1.098183e-002, -8.927319e-002, -4.963723e-002, 5.088151e-002, 4.271075e-002, 9.414796e-003, -1.235795e-002, -1.841421e-002, -1.009802e-002, 1.725270e-002, 2.054251e-002, -6.824460e-003, -1.666002e-002, 4.562594e-003, -1.775135e-002, -2.946164e-002, -8.550783e-003, -5.183099e-003, 1.532772e-002, 3.199751e-002, 3.941088e-002, 1.988360e-002, -2.399210e-002, -7.598025e-002, -2.608347e-002, 7.179288e-003, 6.733544e-003, 5.846299e-004, 2.033319e-002, 1.612720e-002, -1.808075e-002, -6.707936e-002, -3.080100e-003, 4.493969e-002, 4.041972e-002, 1.778408e-002, -2.791630e-003, -1.662402e-002, -2.613153e-003, 9.668515e-003, -2.719003e-004, 1.938136e-002, 5.421265e-003, -5.580636e-003, -1.577703e-002, -1.673623e-002, -2.321091e-002, -1.262799e-002, -1.150514e-002, -1.868780e-002, -2.209900e-002, -1.773840e-002, -6.799678e-003, 1.329404e-002, 6.196852e-003, -2.829048e-004, -1.554239e-002, 1.526474e-003, 8.219386e-003, 9.956051e-003, 4.484651e-003, -9.338708e-003, -2.124173e-002, -1.865686e-002, -2.705609e-002, -4.343889e-002, -4.368906e-002, -4.210138e-003, 2.534375e-002, 3.419280e-002, 5.628812e-002, 6.237168e-003, 1.591934e-002, 1.452107e-002, 1.761454e-002, 8.237579e-003, 8.293962e-004, -1.436934e-003, 1.352402e-002, 4.410449e-002, 6.007775e-002, 3.828846e-002, -1.864420e-002, -1.594024e-002, -1.176960e-002, -3.950367e-002, -2.803306e-002, -1.286860e-002, -1.569432e-002, 2.667208e-002, 6.427622e-002, 3.782647e-002, 1.522857e-002, 6.429578e-003, 9.841750e-004, 7.855872e-003, 3.854114e-002, 5.732721e-002, 7.055608e-002, 7.358679e-002},
{2.946753e-003, 1.669676e-002, 2.147767e-002, -3.031551e-003, -2.193774e-002, -2.406605e-002, -1.849554e-002, -1.631110e-002, -1.389511e-002, -7.641127e-003, 1.456799e-002, 3.774492e-002, 5.094584e-002, 6.164325e-002, 5.747884e-002, 5.631586e-002, 5.256649e-002, 2.236155e-002, -2.058192e-002, -6.147300e-002, -7.012682e-002, -3.764310e-002, -9.476196e-003, 5.792737e-003, 2.127917e-002, 3.921206e-002, 6.684187e-002, 3.083642e-002, -4.229224e-002, -3.146997e-003, -1.005830e-003, 2.579712e-003, 9.867637e-003, 1.166443e-002, 4.605571e-003, -6.994680e-003, -2.400451e-002, -2.468377e-002, -2.213164e-002, -1.022042e-002, -3.409386e-003, -3.801662e-003, -7.921401e-003, -1.156437e-002, -6.200336e-003, 3.198161e-003, -3.580602e-003, -2.437011e-002, -4.700374e-002, -6.878260e-002, -5.696615e-002, -1.252265e-002, 3.847052e-002, 4.730837e-002, 1.629990e-002, 2.218016e-002, 3.666861e-002, -1.906794e-002, -2.131896e-002, -1.468904e-002, 1.133000e-002, 2.211857e-002, 1.979662e-002, 8.463195e-003, -1.122224e-002, -4.155525e-002, -3.199815e-002, -1.683021e-002, -5.256464e-003, -5.133339e-003, -2.561932e-002, -5.303270e-002, -6.165092e-002, -5.325309e-002, -3.227133e-002, -1.341808e-002, -1.225879e-002, -4.584531e-003, -1.313701e-002, -2.635584e-002, -1.444280e-002, 2.054878e-002, 6.014657e-002, 4.957506e-002, -9.883131e-003, -5.498539e-003, -7.510395e-003, -2.245694e-002, -3.671552e-003, 8.114751e-003, -7.870526e-004, 9.637830e-003, -3.897472e-003, -3.466280e-002, -4.746512e-002, -6.583847e-003, 2.941669e-002, 5.243135e-002, 4.489207e-002, 7.922536e-003, -2.745032e-002, -3.650478e-002, -2.331084e-002, -3.912074e-003, 1.432062e-002, 1.376211e-002, 2.016692e-002, 2.886250e-002, 2.590352e-002, 1.482611e-002, 1.601389e-003, 4.147687e-003, 2.944639e-002, 7.285009e-003, -3.468878e-002, -2.567274e-002, -5.134337e-003, 8.053462e-003, -1.070600e-002, -1.289707e-002, -1.142496e-003, -2.309606e-002, -5.343328e-002, -3.729527e-002, 1.540775e-002, 5.610901e-002, 6.683314e-002, 4.501196e-002, 1.154899e-002, -6.878160e-003, 3.131279e-003, 2.118659e-002, 4.399319e-002, 4.672689e-002, 2.698444e-002, 5.733840e-003, 4.285008e-003, 1.333354e-002, 3.100423e-002, 2.483679e-002, -1.927469e-002, -1.855920e-002, -2.420367e-004, -2.292372e-002, -5.214589e-002, 1.637247e-002, 1.804138e-003, -2.240663e-002, 1.016948e-003, 1.369701e-002, -2.547435e-002, -4.580782e-002, -1.498095e-002, 3.534845e-002, 6.287583e-002, 3.991696e-002, -2.616332e-003, -1.931026e-002, -9.981241e-003, 2.065124e-002, 4.445840e-002, 6.751255e-002, 6.282923e-002, 3.485023e-002, -1.008356e-003, -3.317918e-002, -3.975873e-002, -2.479055e-002, 1.181712e-002, 1.810091e-002, -2.431137e-002, -1.461790e-002, -8.843264e-003, -4.106310e-002, 3.383667e-002, -6.607574e-003, -2.542891e-003, 3.585759e-002, 2.257960e-002, -1.380900e-002, -4.494983e-003, 2.117011e-002, 3.745393e-002, 3.204725e-002, -1.249486e-002, -4.708780e-002, -5.044382e-002, -2.651004e-002, 8.633846e-003, 3.591900e-002, 5.455655e-002, 5.618361e-002, 3.622290e-002, 7.278455e-003, -4.108415e-002, -6.917820e-002, -8.068176e-002, -3.815468e-002, 2.485492e-002, 2.553778e-002, 2.650273e-003, 8.416136e-003, -6.071032e-004, 2.871425e-002, -5.199059e-003, 2.948054e-002, 4.629416e-002, 1.184651e-002, -1.112638e-002, 1.625207e-002, 3.743176e-002, 3.363991e-002, 9.864252e-003, -3.626965e-002, -6.935432e-002, -6.799005e-002, -4.399870e-002, -1.090027e-002, 1.383343e-002, 3.344836e-002, 3.951175e-002, 3.660107e-002, 2.465749e-002, -1.184314e-002, -5.157453e-002, -7.617103e-002, -6.716404e-002, -4.972771e-003, 4.414486e-002, 3.646501e-002, 2.350914e-002, 2.643699e-002, 1.287423e-002, 8.003694e-003, 3.754028e-002, 2.668888e-002, -7.937906e-003, -1.632040e-002, 1.131331e-002, 3.662656e-002,


© ISO/IEC 2004 — All rights reserved

Copyright International Organization for Standardization
Provided by IHS under license with ISO
No reproduction or networking permitted without license from IHS
Not for Resale

3.047495e-002, -6.150586e-003, -3.662777e-002, -5.564285e-002, -5.737524e-002, -4.536068e-002, -3.608292e-002, -1.895113e-002, -8.939764e-004, 1.346419e-002, 2.675175e-002, 3.640398e-002, 3.238883e-002, 1.497759e-003, -2.959805e-002, -4.960349e-002, -2.668868e-002, 1.406564e-002, 4.523900e-002, 1.653274e-002, 2.925552e-002, 1.640150e-004, 3.940027e-003, 3.263970e-002, 5.406146e-003, -2.643909e-002, -1.553980e-002, 1.378151e-002, 3.378324e-002, 2.651850e-002, 3.139670e-003, -1.546457e-002, -2.250221e-002, -2.178083e-002, -1.749042e-002, -2.288999e-002, -2.751864e-002, -3.127736e-002, -1.504817e-002, -4.170400e-003, 1.389931e-002, 3.560157e-002, 2.604079e-002, 1.151132e-002, -3.154251e-003, -5.014428e-003, 6.251196e-003, 1.448994e-002, -3.192580e-003, 9.644160e-003, -1.430908e-002, -6.488627e-003, 1.571390e-002, -1.499601e-002, -3.176547e-002, -1.010028e-002, 1.111090e-002, 2.285121e-002, 1.301807e-002, 6.640111e-003, 6.593464e-003, 9.412746e-003, 1.345033e-002, 1.434291e-002, 3.183847e-003, -1.788167e-002, -4.036812e-002, -4.380193e-002, -3.280278e-002, -1.504300e-002, 8.410593e-003, 2.604583e-002, 3.422135e-002, 2.779820e-002, 2.458031e-002, 2.247960e-002, 8.525054e-004, -2.574052e-002, -1.544018e-002, -2.712963e-002, -1.779826e-002, -4.900602e-003, -3.179348e-002, -2.350080e-002, -1.763888e-003, 6.341036e-003, -3.939652e-004, -1.696391e-002, -1.380816e-002, 5.224780e-003, 1.594104e-002, 2.807515e-002, 3.311489e-002, 1.735666e-002, -1.198138e-002, -3.636406e-002, -4.526718e-002, -3.541712e-002, -1.976068e-002, -3.674499e-003, 1.196143e-002, 2.569622e-002, 2.019148e-002, 2.173185e-002, 2.748108e-002, -1.497651e-003, -4.943252e-002, -4.141681e-002, -3.347464e-002, -2.046304e-002, -3.568119e-003, -1.329221e-002, -2.872000e-003, -2.232217e-003, -1.270411e-002, -2.653783e-002, -3.345182e-002, -2.048896e-002, 6.583547e-003, 3.122695e-002, 5.165868e-002, 5.783174e-002, 3.997344e-002, 1.252837e-002, -2.731601e-003, -1.311373e-002, -1.025896e-002, -7.260071e-003, -5.903752e-003, -8.706591e-003, -5.353134e-003, -1.379897e-002, -5.734672e-003, 2.268520e-002, 9.800432e-003, -5.762942e-002, -5.129938e-002, -2.937879e-002, 2.514566e-003, 2.385739e-002, 2.126787e-002, 1.740200e-002, 4.997355e-003, -2.119378e-002, -4.036724e-002, -4.262928e-002, -2.268608e-002, 1.023699e-002, 4.558743e-002, 6.654080e-002, 7.048041e-002, 5.373433e-002, 3.050009e-002, 1.364006e-002, 5.684667e-003, 8.595579e-003, -3.916614e-003, -2.097231e-002, -4.060773e-002, -4.400129e-002, -4.607201e-002, -3.504702e-002, 4.506513e-003, 1.746835e-002, -3.463367e-002, -3.429455e-002, -1.361520e-002, 2.711209e-002, 3.127038e-002, 9.525183e-003, 1.588814e-002, 3.716535e-002, 3.943620e-002, 1.529037e-002, -1.408377e-002, -3.202832e-002, -1.795186e-002, 2.113801e-002, 4.350396e-002, 5.087277e-002, 3.287735e-002, 8.348965e-003, -1.086343e-002, -1.950825e-002, -5.285308e-003, -3.576964e-004, 1.313871e-002, 2.502787e-002, 2.866085e-002, 1.064595e-002, -1.307244e-002, 3.410795e-003, 3.650733e-002, 3.865918e-004, 5.164808e-003, -1.332021e-002, 1.568571e-002, -6.415471e-003, -4.501182e-002, -5.115076e-002, -2.497845e-002, 1.051839e-002, 2.475752e-002, 1.295402e-002, -1.139609e-002, -3.237317e-002, -3.317116e-002, -2.353334e-002, -2.023862e-002, -3.234945e-002, -5.165029e-002, -5.828175e-002, -4.967755e-002, -4.329755e-003, 3.687849e-002, 6.446177e-002, 7.179666e-002, 5.393300e-002, 1.015424e-002, -2.822556e-002, -4.000803e-002, -4.920997e-003, 4.193612e-003, 4.114245e-002, -2.894823e-003, 2.232386e-002, -9.686238e-003, -4.356943e-002, -3.047287e-002, -1.023733e-002, 1.675019e-003, 1.434748e-003, -1.552660e-003, -2.121062e-004, 1.491010e-002, 2.825664e-002, 1.621283e-002, -1.699795e-002, -4.434456e-002, -2.921831e-002, 3.125131e-003, -1.143618e-003, -1.153051e-002, -1.060766e-002, 1.672922e-002, 3.838510e-002, 3.765952e-002, 2.940584e-002, 2.115559e-002, 2.972397e-003, -3.641941e-002, -3.958336e-002, 3.901502e-002, 9.858867e-003, 1.233418e-002, -1.975939e-002, -3.519951e-002, -2.252892e-002, -1.650745e-002, -1.553279e-002, -2.979784e-002, -5.300419e-002, -8.011332e-002, -4.430243e-002, 6.390429e-002, 8.937305e-002, 9.581411e-005, -4.449839e-002, 2.387217e-002, 9.368444e-002, 6.500547e-003, -6.626637e-002, -3.165681e-002, 3.051217e-002, 6.540077e-002, 6.112342e-002, 4.197493e-002, 4.410402e-002, 6.002616e-002, 2.145179e-002, -4.853091e-002, 2.214305e-002, -6.380504e-003, -3.202876e-002, -2.702641e-002, -3.167092e-002, -1.037007e-002, -7.771225e-003, -2.344450e-002, -2.343665e-002, -4.632583e-002, -1.131355e-001, -1.211466e-001, 2.014304e-002, 1.044754e-001, -3.998386e-002, -1.199051e-001, 2.870423e-003, 9.930404e-002, -5.924172e-002, -9.936636e-002, -4.144348e-003, 6.173019e-002, 4.751025e-002, 2.171296e-002, 4.040143e-003, -1.638093e-002, 2.215330e-002, 4.729279e-002, -1.719371e-002, 3.526278e-002, 2.699440e-003, -1.052996e-002, 1.840375e-002, 4.797093e-002, 8.568659e-002, -1.345236e-002, -7.070104e-002, -2.178912e-002, 4.123047e-002, -3.015053e-002, -1.252402e-001, -2.560545e-002, 1.278283e-001, 2.936193e-002, -4.179939e-002, 3.576122e-002, 8.379633e-002, -4.820029e-002, -6.031354e-002, 7.087480e-002, 7.303596e-002, -2.126635e-002, -2.407480e-002, 1.042952e-001, 8.271043e-002, 3.595906e-002, 4.380877e-002, 1.565259e-002, 4.134673e-002, 9.606649e-003, -8.826933e-004, 2.473748e-002, 1.038952e-002, 2.190326e-002, 3.883624e-002, -8.016261e-003, 2.452341e-002, 6.686460e-002, 2.768831e-002, -9.532149e-002, -6.992788e-002, 9.900871e-002, 5.071598e-002, 6.809101e-003, 1.745601e-002, 3.309095e-002, -3.502254e-002, -4.475669e-002, 4.243003e-002, 4.323954e-002, -6.451872e-002, -5.699562e-002, 5.784958e-002, 2.688272e-002, 4.077439e-002, 3.441118e-002, 1.549262e-002, 1.918922e-002, 1.415984e-003, -2.497531e-002, 4.826058e-003, -2.335864e-002, -4.082529e-002, -3.656485e-002, -1.893983e-002, -8.136449e-003, -2.669952e-003, -6.371169e-004, -5.780470e-002, -8.198557e-002, 2.275075e-002, 2.219422e-002, 6.526784e-003, -

© ISO/IEC 2004 — All rights reserved


Copyright International Organization for Standardization
Provided by IHS under license with ISO
No reproduction or networking permitted without license from IHS
Not for Resale

7.873421e-004, -3.098190e-002, -2.616601e-002, 1.204287e-002, 4.603644e-002, 2.408542e-002, -8.616787e-003, -3.088820e-002, -5.155030e-002, -5.011287e-002, -2.271216e-002, -1.872147e-002, -1.893815e-002, 7.671260e-003, 1.398936e-002, -9.260524e-003, 7.587525e-003, -1.385609e-002, -4.087246e-002, -4.195141e-002, -1.434342e-002, 2.171882e-002, 5.371309e-002, 5.410794e-002, -2.406600e-002, -7.561988e-002, -8.792278e-003, -1.812985e-003, -9.865033e-004, -5.558346e-004, -5.977142e-002, -5.641696e-002, 3.912107e-002, 9.148176e-002, 7.951282e-002, 3.962504e-002, -1.834703e-002, -5.653313e-002, -5.050072e-002, -1.945041e-002, -2.558044e-002, -2.365946e-002, -1.957431e-003, 1.722585e-002, 2.919081e-002, 1.179770e-002, -1.645801e-002, -4.906507e-002, -3.238629e-002, 8.975001e-003, 5.614053e-002, 9.042056e-002, 7.290322e-002, -2.522994e-002, -3.713893e-002, -6.255905e-003, -1.277929e-002, 4.790647e-004, 1.086792e-002, -2.046020e-002, -7.433258e-002, -1.230832e-002, 7.027428e-002, 8.297674e-002, 5.479437e-002, 1.085014e-003, -4.352598e-002, -5.323132e-002, -7.874260e-003, 7.194354e-003, -4.614712e-003, -9.987497e-003, 7.727861e-003, 4.580133e-002, 9.808442e-003, -3.748642e-002, -5.875360e-002, -2.508335e-002, 2.957610e-002, 7.271143e-002, 8.826044e-002, 3.599639e-002, -2.222642e-002, 8.515203e-003, 1.994366e-002, -1.452535e-004, 8.785598e-003, 3.183448e-002, 2.190072e-002, -2.074623e-002, -5.242697e-002, 1.343743e-003, 2.743979e-002, 1.846965e-002, -1.465044e-002, -5.112141e-002, -6.292177e-002, -2.322511e-002, 2.861960e-002, 2.636782e-002, -2.987636e-002, -9.180624e-003, 4.107774e-002, 8.263340e-003, -5.064808e-002, -7.633808e-002, -5.056770e-002, -6.724420e-003, 3.208004e-002, 4.393383e-002, 1.395876e-002, 3.619610e-003, 2.979351e-002, 1.533628e-002, -1.428868e-002, -6.263955e-004, 3.454638e-002, 3.524563e-002, 4.138039e-002, 9.981201e-003, -7.944215e-003, -2.142829e-002, -3.678947e-002, -6.000242e-002, -8.504927e-002, -8.335639e-002, -1.768348e-002, 4.076945e-002, 1.054130e-002, -4.055595e-002, -3.268509e-002, 1.474397e-002, 9.156033e-003, -2.604866e-002, -3.986252e-002, -1.752671e-002, 2.447059e-002, 6.197023e-002, 6.066111e-002, 2.010442e-002, 5.336100e-003, 1.949663e-002, -7.028337e-003, -4.237978e-002, -2.605182e-002, 5.260374e-003, 4.515760e-003, 3.315705e-002, 7.253636e-002, 6.580167e-002, 3.040823e-002, -6.092277e-003, -3.902350e-002, -6.576127e-002, -6.511775e-002, -1.905004e-002, 1.579843e-002, -1.252914e-002, -5.203561e-002},
{-6.304453e-002, -2.965333e-003, 1.030251e-002, -9.748746e-003, -3.247752e-002, -5.245534e-002, -5.749284e-002, -3.784494e-002, -1.596504e-002, 1.112019e-002, 4.303039e-002, 6.334559e-002, 6.173396e-002, 4.396477e-002, 1.661205e-002, 3.502346e-003, 1.732453e-002, 4.272056e-002, 6.197775e-002, 6.186168e-002, 3.812855e-002, 5.080351e-003, -1.359659e-002, -1.678070e-002, -1.848481e-002, -1.500521e-002, -2.329082e-002, -2.252810e-002, -1.108774e-002, 1.785843e-002, 3.335103e-002, 2.487626e-002, 2.403274e-002, 1.725533e-002, 4.435274e-003, -6.668976e-003, -1.618919e-002, -3.915439e-003, 1.681930e-002, 3.130458e-002, 3.662369e-002, 2.217138e-002, 4.327485e-004, -3.266233e-002, -4.385383e-002, -1.603701e-002, 2.549876e-002, 4.938541e-002, 5.127047e-002, 1.561545e-002, -1.799678e-002, -2.748829e-002, -2.151279e-002, 5.487940e-003, 2.180148e-002, 2.930930e-002, 1.185167e-002, 1.993784e-003, 2.278579e-002, 2.341017e-003, 1.420353e-002, 4.189832e-002, 5.401705e-002, 1.672352e-002, -1.486816e-002, -1.890044e-002, -6.969074e-003, -5.307332e-004, -3.080251e-003, -8.334964e-003, -2.183375e-002, -3.467245e-002, -6.754439e-002, -6.578357e-002, -3.002141e-002, 2.871476e-002, 5.110930e-002, 3.584274e-002, -1.210713e-002, -6.987260e-002, -7.473539e-002, -5.229449e-002, -2.029491e-002, 7.103739e-003, 2.592729e-002, 2.599109e-002, 4.845581e-003, -3.004994e-003, -2.206526e-002, 1.045749e-002, 4.762057e-002, 4.219994e-002, 1.099853e-002, 1.491159e-004, 3.691441e-004, -1.272541e-003, -1.158613e-002, -2.313891e-002, -2.189959e-002, -1.878379e-002, -3.085098e-002, -5.659132e-002, -6.082904e-002, -2.332491e-002, 5.136055e-002, 8.672492e-002, 7.161960e-002, 1.678255e-002, -7.170160e-002, -1.062930e-001, -6.009837e-002, -1.744021e-002, 6.358308e-003, 9.170345e-003, 8.547706e-003, 2.966059e-003, -2.122622e-002, -2.669315e-002, 1.536830e-003, 2.526128e-002, 1.691123e-002, 2.325874e-002, 3.397382e-002, 2.346013e-002, -1.488906e-002, -4.591299e-002, -4.816512e-002, -3.098285e-002, -8.680265e-003, -1.565713e-002, -4.715994e-002, -6.602896e-002, -3.750318e-002, 2.914531e-002, 7.183276e-002, 7.623794e-002, 2.982018e-002, -4.536705e-002, -8.381314e-002, -4.854842e-002, 1.092636e-002, 4.508913e-002, 2.059136e-002, -7.758070e-003, -1.481263e-002, -1.236854e-002, -2.356333e-002, -8.321427e-003, -9.201566e-003, 6.611129e-003, 4.707315e-002, 6.389374e-002, 1.591628e-002, -3.028896e-002, -4.572800e-002, -2.901936e-002, -2.778202e-003, 3.865481e-002, 2.758473e-002, -4.496741e-003, -5.016331e-002, -4.010539e-002, 5.281918e-003, 3.984991e-002, 4.042463e-002, 7.166324e-003, -4.296954e-002, -7.495499e-002, -3.268231e-002, 3.078012e-002, 6.876487e-002, 5.143037e-002, -6.289590e-003, -2.561625e-002, -5.258581e-003, -2.011807e-002, -2.916525e-002, -3.394376e-002, 3.929375e-003, 4.103264e-002, 4.048109e-002, -3.157532e-003, -2.510810e-002, -1.142049e-002, 1.032867e-002, 3.943285e-002, 7.953162e-002, 7.560491e-002, 3.318340e-002, -1.438548e-002, -2.468196e-002, -4.428366e-004, 2.557894e-002, 2.432919e-002, -1.039571e-002, -4.215548e-002, -6.357350e-002, -2.747524e-002, 4.178525e-002, 6.359685e-002, 5.354172e-002, 1.243859e-002, -9.597349e-003, 2.340934e-003, -2.900493e-002, -4.346667e-002, -4.353725e-002, -1.721605e-002, 1.349140e-003, 2.822794e-003, -1.675998e-002, -6.870351e-003, 1.016317e-002, 3.030063e-002, 5.777393e-002, 9.018176e-002, 9.164603e-002, 5.258479e-002, 2.002885e-002, 2.093904e-003, 1.173563e-002, 3.254199e-002, 2.508300e-002, -4.526679e-003, -


© ISO/IEC 2004 — All rights reserved

Copyright International Organization for Standardization
Provided by IHS under license with ISO
No reproduction or networking permitted without license from IHS
Not for Resale

3.233501e-002, -4.720485e-002, -2.235055e-002, 3.848486e-002, 4.892991e-002, 1.583399e-002, -9.257724e-004, 5.188621e-003, 8.743461e-003, -3.222804e-002, -3.985386e-002, -3.477185e-002, -2.651477e-002, -2.114380e-002, -2.449675e-002, -2.983881e-002, -8.047889e-003, -1.732393e-003, 9.981010e-003, 3.862841e-002, 5.526347e-002, 5.401893e-002, 2.524813e-002, 1.287903e-002, 8.419683e-003, 7.494592e-003, 1.821164e-002, 1.798912e-002, -4.089187e-005, -1.357142e-002, -1.711399e-002, -3.824575e-003, 2.954069e-002, 3.370310e-002, -1.370307e-002, -4.898552e-002, -6.440036e-003, 1.489970e-002, -1.341834e-002, -2.020695e-002, -2.563537e-002, -1.706003e-002, -1.579654e-002, -2.605106e-002, -1.887615e-002, -2.583063e-003, -5.657135e-003, -3.983432e-003, 1.650385e-004, -3.037075e-003, -1.015136e-002, -3.386891e-002, -3.918355e-002, -2.259782e-002, -2.449433e-002, -3.127160e-002, -3.730607e-002, -3.051897e-002, -2.789063e-002, -1.092432e-002, 1.496802e-002, 3.765900e-002, 3.827662e-002, -2.555608e-002, -7.315474e-002, -1.702122e-002, 2.069212e-002, 7.613184e-003, 1.260684e-002, 2.966718e-004, 7.052750e-003, 1.204079e-003, 5.540836e-004, 1.476110e-003, 1.651810e-002, 2.484767e-002, 1.749816e-002, -6.495943e-003, -2.609947e-002, -3.897543e-002, -5.573833e-002, -5.973227e-002, -4.313159e-002, -5.302972e-002, -6.804350e-002, -7.825175e-002, -7.540760e-002, -4.828922e-002, -1.339010e-002, 1.805186e-002, 4.492141e-002, 5.480162e-002, 3.985224e-003, -6.412952e-002, -1.123329e-002, 3.008367e-002, 2.502928e-002, 3.769999e-002, 2.974441e-002, 2.418600e-002, 1.068732e-002, 7.927187e-003, 7.055866e-004, 1.987319e-002, 3.744977e-002, 3.692630e-002, 7.682528e-003, -1.960409e-002, -2.559787e-002, -3.292417e-002, -3.259358e-002, -9.367571e-003, -2.003619e-002, -4.019582e-002, -6.215308e-002, -6.564935e-002, -3.644344e-002, 8.066734e-003, 3.225373e-002, 5.343299e-002, 6.597579e-002, 3.659241e-002, -3.215555e-002, 9.829327e-003, 3.085355e-002, 2.564246e-002, 4.598018e-002, 3.482830e-002, 1.793276e-002, 1.963664e-003, -1.128282e-002, -1.048957e-002, 1.039109e-002, 3.940032e-002, 4.943666e-002, 3.194737e-002, 1.141249e-002, 6.748492e-003, 4.497465e-003, 8.227944e-003, 3.803463e-002, 4.552825e-002, 2.757477e-002, -7.243165e-003, -1.365735e-002, 1.175728e-002, 4.890522e-002, 6.381236e-002, 5.446500e-002, 5.002911e-002, 3.293307e-002, -1.212033e-002, 1.871360e-002, 1.220276e-002, -2.029795e-003, 1.400790e-002, 8.414032e-003, -1.435599e-002, -4.226429e-002, -5.801642e-002, -6.546294e-002, -4.120685e-002, 6.977768e-003, 3.271071e-002, 3.041553e-002, 1.725769e-002, 5.287816e-003, -3.582417e-003, -1.045652e-003, 2.496756e-002, 5.065728e-002, 3.941037e-002, 9.987028e-004, -6.480027e-003, 1.554035e-002, 3.050305e-002, 2.909593e-002, 1.932324e-002, 1.512463e-003, -1.390179e-002, -2.460056e-002, 4.652965e-003, -1.951345e-002, -1.893435e-002, 1.723007e-002, -9.226956e-003, -3.355385e-002, -2.014611e-002, 1.239237e-003, 3.932514e-003, 7.058275e-003, 1.535112e-002, 1.561417e-002, -2.793933e-003, -1.660448e-002, -3.187728e-002, -5.224712e-002, -6.095887e-002, -3.268584e-002, 1.487096e-002, 3.094698e-002, 2.510197e-002, 2.806617e-002, 2.516794e-002, 6.839784e-003, -1.571443e-002, -2.871079e-002, -3.523014e-002, -5.053540e-002, -4.221669e-002, -2.128369e-002, -5.702553e-003, 2.421916e-002, -7.374074e-003, -1.006812e-001, -1.082740e-001, -3.272421e-002, 2.402736e-002, 5.388757e-002, 6.833990e-002, 4.879309e-002, 4.238204e-003, -4.063338e-002, -5.726250e-002, -5.808618e-002, -6.705770e-002, -7.568810e-002, -4.420992e-002, 1.341199e-002, 3.192443e-002, 3.802056e-002, 4.952148e-002, 5.348551e-002, 4.013716e-002, 9.498759e-003, -3.384731e-002, -5.416610e-002, -2.992909e-002, -2.126376e-003, -3.347323e-003, 5.252799e-002, 7.499604e-002, -1.479375e-002, -4.694882e-002, -9.987547e-003, 2.258975e-002, 3.102561e-002, -8.061125e-003, -2.861999e-002, -3.857554e-002, -4.518958e-002, -4.225984e-002, -2.937276e-003, 2.912120e-002, 3.023311e-002, 4.051716e-002, 5.342590e-002, 9.518541e-003, -5.350450e-002, -6.484171e-002, -2.514193e-002, 1.979641e-002, 3.393629e-002, 4.011881e-002, 2.393260e-002, -6.972518e-003, 7.967622e-003, 6.921734e-002, 3.630236e-002, 7.437495e-002, 3.788877e-002, -7.188366e-003, 3.116486e-003, 9.463926e-003, 8.606491e-003, 1.280369e-002, 1.922766e-002, 1.433039e-002, -1.742671e-002, -4.893765e-002, -2.073715e-002, 5.837121e-002, 8.316930e-002, 7.836899e-002, 9.869601e-002, 8.924037e-002, -4.427091e-002, -8.595621e-002, -1.467285e-002, 5.068748e-002, 5.822078e-002, 3.587549e-002, 1.486637e-002, 3.166652e-003, -9.776270e-004, 2.150977e-003, 5.809245e-002, 3.079910e-002, 1.048630e-002, -2.471338e-002, -6.871557e-003, -5.860737e-003, -2.419470e-002, -8.566502e-004, 3.166531e-003, 2.767441e-002, 7.874135e-002, 6.189339e-002, 4.593073e-003, -9.250282e-003, 5.897527e-003, -3.773857e-002, -6.656937e-002, 3.634453e-003, 1.294502e-002, -5.797091e-002, -1.349013e-003, 6.015388e-002, 8.638157e-003, -5.887260e-002, -8.390153e-002, -7.884579e-002, -5.171047e-002, -6.580081e-003, -1.441025e-002, -5.467614e-003, 1.310203e-002, -7.140151e-003, 9.966498e-004, 3.929959e-002, -1.471675e-002, -3.122554e-002, 9.840493e-002, 4.209829e-002, 1.075972e-002, 8.634406e-002, 9.965640e-002, 2.670813e-002, 1.300145e-002, -9.850847e-004, -6.848205e-002, -8.938788e-002, -3.679700e-002, -1.978255e-002, -2.988117e-002, 1.519336e-002, 4.727271e-002, -3.591406e-002, -3.476279e-002, -8.478859e-003, -2.687657e-002, -4.984150e-002, 1.844064e-002, 3.038165e-002, 3.688384e-004, 1.722868e-002, 6.839062e-003, 1.080289e-002, 2.286100e-002, -5.755592e-002, -1.082325e-001, 3.805307e-002, 4.486674e-002, 6.776187e-003, 1.262739e-002, 1.206753e-002, -3.428352e-002, -8.699837e-003, 3.307792e-002, 2.362316e-002, 1.664378e-002, 1.488764e-002, -4.386905e-002, -5.143472e-002, -2.700969e-002, -3.132746e-002, -6.892111e-002, -7.401735e-003, 3.695405e-002, -3.161433e-002, -3.895371e-002, 1.234438e-002, 3.383990e-002, 1.912082e-002,

© ISO/IEC 2004 — All rights reserved


Copyright International Organization for Standardization
Provided by IHS under license with ISO
No reproduction or networking permitted without license from IHS
Not for Resale

1.099375e-002, -2.956289e-002, -2.529121e-002, -3.143099e-004, -3.483037e-002, -3.227949e-002, 2.665855e-002, 6.475518e-002, 5.141592e-002, 2.234837e-002, -2.465870e-002, -5.293096e-002, -3.558774e-002, 2.484428e-002, 3.986211e-002, 2.917147e-002, 2.102502e-002, -3.876312e-002, -2.597728e-002, 2.769491e-002, 7.856627e-003, -3.115068e-002, -2.011696e-002, -3.780366e-002, -8.251208e-002, -4.985446e-002, -1.566379e-002, -6.097463e-003, -2.300375e-002, -1.942706e-002, -4.702321e-002, -4.109242e-002, -1.151491e-002, -2.829760e-002, -4.635552e-002, -2.707906e-002, -2.658120e-003, 1.432972e-002, 1.640575e-002, -1.344200e-002, -3.026380e-002, -3.968178e-003, 2.570847e-002, 1.065193e-002, -1.928270e-002, 3.493346e-003, -3.152216e-002, -5.269464e-003, 8.296726e-002, 7.959579e-002, 2.937563e-002, -2.075358e-002, -6.538121e-002, -7.603189e-002, -2.392716e-002, 7.275301e-003, -1.646013e-002, -4.270108e-002, -4.581269e-002, -3.013779e-002, -2.898205e-002, 8.956435e-003, -9.217703e-003, -3.344692e-002, -3.234022e-002, -1.139889e-002, 9.554242e-003, 1.488412e-002, -5.131542e-003, -1.803672e-002, 1.401869e-002, 6.789773e-003, -1.392221e-002, -5.655425e-002, -2.451284e-002, 3.328512e-003, 6.182737e-003, 4.066893e-002, 7.863800e-002, 7.013548e-002, 2.871861e-002, -1.198806e-002, -1.011243e-002, 3.289636e-002, 5.390841e-002, 1.264568e-002, -2.725426e-002, -4.092575e-002, -7.653693e-003, -6.884431e-003, 1.637210e-002, 7.696844e-003, -1.758817e-002, -2.150908e-002, 5.844522e-005, 1.599838e-002, 1.015127e-002, -1.148682e-002, -8.721248e-004, 9.985438e-003, -6.339629e-004, -1.483749e-002, -5.164149e-002, -3.065968e-002, 2.503575e-002, 3.022504e-002, 1.724805e-002, 2.591599e-002, 2.749683e-002, 1.253227e-002, -8.052971e-003, 9.222623e-004, 4.131643e-002, 6.177243e-002, 3.051952e-002, -1.741489e-002, -1.859016e-002, -5.179440e-003, 1.924082e-002, 2.797605e-002, 2.584069e-002, -7.228627e-003, -1.091208e-002, 9.055913e-004, 5.736425e-003, 7.988971e-003, 4.177053e-003, -8.103680e-003, 2.782215e-003, 2.029826e-002, 4.452590e-003, -1.346413e-002, -2.854695e-003, 3.196764e-002, 5.330421e-002, 1.959293e-002, -2.127846e-002, -3.473597e-002, -3.451078e-002, -3.290779e-002, -1.459123e-002, 1.800911e-002, 4.167023e-002, 1.812436e-002, -1.598114e-002, -2.697773e-003, -1.139567e-002, 1.374999e-002, 4.876146e-002, 5.669480e-002, 4.077130e-002, 2.648161e-002, 2.098943e-002, 2.284624e-002, 1.504456e-002, -2.595162e-002, -4.059859e-002, 1.489069e-002, 5.370105e-002, 3.126284e-002, 1.403672e-002, 3.525442e-002, 5.381320e-002, 5.657468e-002, 4.286196e-002, -7.866788e-003, -5.335996e-002, -7.274911e-002, -7.019221e-002, -4.647372e-002, -5.189167e-003, 2.516563e-002, 2.632870e-002, 1.665779e-003, 1.926088e-003},
{1.690677e-003, 5.044942e-003, -1.933677e-002, -1.528642e-002, -1.180510e-002, -2.002128e-002, -5.522611e-002, -6.787648e-002, -5.373225e-002, -8.205358e-003, 3.186327e-002, 5.177747e-002, 5.682010e-002, 2.921022e-002, -1.360431e-002, -4.063290e-002, -3.867807e-002, -8.762038e-003, 1.627539e-002, 3.591932e-002, 4.975834e-002, 4.101806e-002, 2.675732e-002, 2.612534e-002, -7.480508e-003, -1.253727e-002, 2.986830e-003, 2.884787e-002, 3.677896e-002, -4.835216e-005, -5.987734e-003, 8.131531e-003, 2.991874e-002, 3.555281e-002, 5.022287e-003, -4.004845e-002, -5.394269e-002, -3.570680e-002, 1.481906e-002, 4.985388e-002, 6.659307e-002, 5.226424e-002, 1.314619e-002, -3.730702e-002, -5.398051e-002, -4.048518e-002, -1.209437e-003, 2.616621e-002, 3.033713e-002, 2.561022e-002, 1.958288e-002, 9.798149e-003, 4.886318e-003, 9.184069e-003, 6.711478e-003, -1.029232e-002, -4.125915e-003, 1.442341e-002, -9.153300e-003, 8.444057e-004, 2.798247e-002, 4.629252e-002, 5.472510e-002, 2.791249e-002, -1.636802e-002, -5.419966e-002, -4.760569e-002, -2.409979e-003, 3.623217e-002, 5.103242e-002, 2.157467e-002, -2.027896e-002, -6.543436e-002, -6.053901e-002, -2.728168e-002, 1.766852e-002, 3.766007e-002, 2.979297e-002, 1.413310e-002, 4.725302e-003, -2.030240e-002, -2.011057e-002, -2.051391e-002, -7.573421e-003, 9.318833e-004, -2.019365e-002, -1.775626e-002, -5.766513e-003, 8.753200e-003, 6.523193e-003, 2.278831e-002, 4.547010e-002, 3.964899e-002, -2.153263e-003, -5.773049e-002, -4.336276e-002, 8.773470e-003, 5.539126e-002, 7.171727e-002, 1.991874e-002, -3.323323e-002, -7.459009e-002, -6.176134e-002, -2.546833e-002, 1.529333e-002, 3.093319e-002, 2.262125e-002, 6.580723e-003, -7.050942e-003, -1.394226e-002, -3.144364e-002, -3.420844e-002, -3.163209e-002, -8.882928e-003, -4.591342e-003, -2.168602e-002, 2.057366e-003, -9.758134e-003, -2.864611e-002, 4.444644e-003, 4.622714e-002, 4.177154e-002, -7.692047e-003, -4.250952e-002, -1.684665e-002, 4.221086e-002, 8.651913e-002, 8.835890e-002, 3.172039e-002, -3.483631e-002, -6.869015e-002, -5.005385e-002, -2.022802e-002, 5.547507e-003, 1.698623e-002, 8.150809e-003, -5.755521e-003, -2.335998e-002, -9.574883e-003, -7.831526e-003, -2.441843e-002, -3.031436e-002, -2.786375e-002, 2.977198e-003, 5.989503e-003, 6.452984e-003, -3.291565e-002, -3.441246e-002, 2.678490e-002, 4.432553e-002, 1.545834e-002, -1.085688e-002, -2.547885e-002, -2.250461e-002, 9.817059e-003, 4.452032e-002, 4.668214e-002, 9.005126e-003, -3.168076e-002, -4.839259e-002, -1.142229e-002, 1.916650e-002, 2.790696e-002, 2.214555e-002, -3.242825e-003, -2.126930e-002, -2.811026e-002, -1.499041e-002, 1.215245e-002, 1.098088e-002, -8.072343e-003, -2.602706e-002, -1.198481e-002, 2.313104e-002, 2.770005e-003, -4.286005e-002, -1.128097e-002, 2.792669e-002, 2.109762e-002, 1.710329e-002, 1.323683e-002, -1.289759e-002, -5.278443e-002, -6.309939e-002, -4.897343e-002, -3.041180e-002, -3.091493e-002, -2.751861e-002, -8.279811e-003, 3.215532e-002, 6.037081e-002, 5.241451e-002, 2.772128e-002, -6.989700e-004, -1.377631e-002, -1.571108e-002, 8.059546e-004, 2.125526e-002, 4.292709e-002, 3.553093e-002, -3.549832e-003, -1.366193e-002, 1.771780e-002, -2.046898e-003, -2.901788e-002, -1.193963e-002, -9.562539e-003, -7.800399e-003,


© ISO/IEC 2004 — All rights reserved

Copyright International Organization for Standardization
Provided by IHS under license with ISO
No reproduction or networking permitted without license from IHS
Not for Resale

2.512864e-002, 4.835708e-002, 3.303813e-003, -6.244620e-002, -9.637221e-002, -7.963210e-002, -6.428710e-002, -4.388932e-002, -1.225695e-002, 2.071209e-002, 4.596954e-002, 6.968183e-002, 5.283089e-002, 2.194144e-002, -4.299923e-003, -1.197591e-002, -3.717959e-003, 1.198474e-002, 2.097238e-002, 2.687007e-002, 3.592172e-002, 1.810576e-002, -1.841913e-003, 1.551532e-002, -1.524965e-003, -2.845698e-002, -3.793030e-002, -5.784056e-002, -1.406318e-002, 4.951771e-002, 6.677824e-002, 3.141972e-002, -3.120920e-002, -7.004165e-002, -6.438333e-002, -5.108117e-002, -3.050876e-002, 9.247888e-004, 2.775425e-002, 3.900527e-002, 4.235690e-002, 2.911244e-002, 1.723805e-003, -1.792357e-002, -1.429658e-002, -1.555243e-004, 1.561187e-002, 1.813911e-002, 2.678567e-003, 2.453392e-003, 1.274959e-002, -1.621505e-003, 1.208679e-002, -6.357070e-003, -3.931202e-002, -7.472965e-002, -7.821400e-002, -8.549812e-003, 5.819461e-002, 6.976220e-002, 4.463521e-002, -4.284579e-004, -3.099634e-002, -3.444205e-002, -1.314558e-002, 5.040611e-003, 3.444350e-002, 4.171032e-002, 2.764356e-002, 2.744931e-003, -1.527301e-002, -3.620696e-002, -3.971162e-002, -2.071348e-002, 3.423447e-003, 2.134658e-002, 1.948470e-002, -1.122851e-002, -3.210068e-002, -3.904450e-003, 8.910742e-004, 2.858860e-003, -2.416678e-003, -2.510479e-002, -6.652365e-002, -6.385488e-002, 3.584309e-003, 5.818877e-002, 6.669434e-002, 4.951745e-002, 2.950663e-002, 1.311207e-002, 1.084234e-002, 3.845466e-002, 6.003510e-002, 7.636895e-002, 6.190090e-002, 2.547724e-002, -1.772529e-002, -3.801886e-002, -5.031665e-002, -4.123162e-002, -2.174419e-002, 8.307237e-003, 2.353762e-002, 2.289004e-002, -1.690258e-002, -5.048960e-002, -2.763204e-002, 5.297558e-003, -2.614981e-003, 2.383880e-002, 1.412430e-002, -2.679458e-002, -2.863158e-002, 2.462179e-002, 4.943238e-002, 4.098953e-002, 2.597465e-002, 1.916591e-002, 1.353571e-002, 1.328823e-002, 4.155112e-002, 6.314488e-002, 6.643862e-002, 4.087037e-002, 6.592266e-003, -3.028380e-002, -4.610143e-002, -3.537648e-002, -2.366408e-002, -1.192419e-002, 7.601397e-003, 2.538070e-002, 3.018794e-002, -7.939602e-003, -4.827478e-002, -3.703078e-002, 9.551964e-003, 1.682886e-002, 4.350347e-002, 4.821953e-002, 9.725244e-003, -2.210802e-003, 1.301766e-002, 2.534137e-003, -9.228833e-003, -1.212206e-002, -1.007893e-002, -1.904675e-002, -2.464013e-002, -2.690152e-003, 2.618547e-002, 3.385817e-002, 1.597395e-002, -6.118341e-003, -3.733910e-002, -4.619657e-002, -1.931610e-002, -3.058535e-003, -1.038538e-004, 7.968526e-003, 2.267328e-002, 3.652389e-002, 5.228230e-003, -3.579000e-002, -3.260951e-002, 1.219160e-002, 2.443805e-002, 3.219189e-002, 4.767827e-002, 1.990537e-002, -2.867172e-002, -4.364167e-002, -4.144759e-002, -1.492677e-002, 2.168906e-002, 2.426316e-002, -1.091357e-002, -4.881174e-002, -5.233309e-002, -2.526023e-002, -2.719613e-003, -7.914582e-003, -1.681611e-002, -2.298028e-002, -2.560033e-002, 7.331143e-003, 3.672045e-002, 3.398276e-002, 1.092096e-002, -6.189204e-003, -1.325656e-002, -2.971469e-002, -4.752653e-002, -2.357691e-002, 7.427884e-003, 1.567473e-003, -7.112509e-003, 1.720503e-002, 1.049399e-002, -3.566301e-002, -6.578285e-002, -6.065334e-002, -2.055036e-002, 3.076779e-002, 5.935507e-002, 5.364230e-002, 5.535201e-005, -3.582405e-002, -4.054313e-002, -2.942798e-002, -2.200626e-002, -1.329412e-002, 2.261119e-003, 2.034815e-002, 3.593051e-002, 5.059454e-002, 3.102633e-002, -8.004995e-003, -3.138613e-002, -2.603547e-002, -2.047125e-002, -2.641827e-002, -1.955562e-002, 2.422259e-003, -3.115935e-002, -3.505844e-002, 1.150770e-002, 5.366121e-002, 2.864339e-002, -1.083516e-002, -4.089815e-002, -5.839410e-002, -4.733161e-002, -1.959421e-002, 1.483343e-002, 2.388531e-002, 1.404038e-002, -1.228384e-003, 4.649572e-005, 5.779857e-003, 8.739792e-003, 1.353972e-002, 1.723717e-002, 1.684643e-003, -6.681992e-003, -1.188075e-002, -3.466257e-002, -2.042182e-002, 1.132630e-002, 5.505184e-002, 6.411085e-002, 4.615053e-002, 1.708970e-002, -4.278952e-002, -4.580019e-002, -8.023202e-003, 2.098833e-002, -1.155860e-003, -1.124464e-002, -9.499522e-003, -1.130666e-002, 1.196325e-003, 2.999616e-002, 6.616659e-002, 5.367526e-002, 1.985187e-002, -1.831249e-003, 1.731689e-002, 3.342609e-002, 7.573032e-003, -1.905593e-002, -2.111581e-003, 2.291776e-002, 5.265807e-002, 3.489461e-002, -1.335716e-002, -3.242592e-002, -3.645659e-002, -3.868449e-003, 3.034174e-002, 4.167877e-002, 3.168030e-002, -1.971060e-002, -3.901329e-002, -4.493154e-002, -2.973049e-002, -2.487079e-002, 8.274146e-003, 1.266139e-002, -2.326316e-002, -5.579212e-002, -3.941151e-002, 5.405276e-002, 9.294267e-002, 7.078274e-003, -7.076551e-002, -2.193028e-002, 3.378313e-002, -4.594693e-003, -3.766299e-002, 1.972722e-002, 6.515891e-002, 4.898497e-002, 1.720159e-002, 8.490083e-003, 3.519460e-003, 1.101196e-002, 2.993005e-002, 2.992697e-002, 3.500144e-003, -2.259374e-003, -1.119390e-002, 7.000611e-002, -1.078942e-002, -4.076716e-002, -8.006973e-003, 4.295067e-002, 3.590663e-002, -8.132243e-004, -4.754697e-002, -8.947027e-002, -5.767907e-002, 2.351694e-002, 1.614985e-002, -1.064289e-001, -4.223589e-002, 5.816648e-002, 1.834123e-002, -3.851345e-002, 1.746335e-002, 5.063585e-003, -2.568095e-002, -2.326659e-002, -4.082234e-003, -7.056697e-003, -1.977962e-003, -8.644353e-003, 1.474098e-002, 7.491153e-003, 1.902434e-003, 3.239136e-002, 1.212453e-001, -5.121393e-003, -2.922387e-002, 2.278395e-003, 2.840690e-002, -4.583071e-003, 1.343122e-002, 5.129917e-002, 5.535345e-003, -9.465247e-002, -3.523622e-002, -1.050258e-002, -9.017947e-002, -4.998924e-002, 1.207343e-002, -3.155794e-002, -8.717820e-002, -5.170637e-002, -7.303586e-002, -1.138320e-001, -1.015371e-002, -8.932145e-003, -1.837449e-002, 5.031568e-002, -3.456667e-002, -4.410224e-002, -8.349971e-003, 1.797284e-002, 8.462039e-002, 2.288160e-002, -4.063643e-002, -1.394613e-002, 1.521003e-002, 4.853135e-002, -6.333278e-003, -5.193293e-003, 1.125437e-001, 1.173491e-001, -2.928253e-002, -1.777590e-002, 3.472195e-002, -

© ISO/IEC 2004 — All rights reserved


Copyright International Organization for Standardization
Provided by IHS under license with ISO
No reproduction or networking permitted without license from IHS
Not for Resale

5.174315e-002, -8.178995e-003, 1.793072e-002, -2.993228e-002, -7.105977e-002, -1.796712e-002, -2.487872e-002, -1.872671e-002, 9.199940e-002, -2.134554e-002, -1.022945e-001, 2.363817e-003, 7.024222e-003, -2.749537e-002, 5.082012e-003, -7.937561e-003, 3.747624e-002, -3.780264e-002, -2.278346e-002, 1.878101e-002, 1.123131e-002, -3.199821e-002, -4.354965e-002, -1.734475e-002, 5.097620e-002, 5.935199e-002, 1.202750e-002, 3.417412e-005, 5.846562e-002, 9.163969e-003, 4.862018e-002, 3.428974e-002, 1.505705e-002, 1.805483e-002, 7.603132e-002, 4.910189e-002, 5.739501e-002, 7.830116e-002, 3.783600e-002, -4.614656e-002, -3.816749e-002, 6.608906e-003, 3.184855e-002, 2.449598e-002, -2.116205e-002, 8.273668e-003, -5.543604e-003, 1.108357e-002, 2.428900e-002, 1.944453e-002, 2.279716e-002, 2.868988e-002, 4.356274e-002, 4.562982e-002, 8.761358e-003, -4.189461e-002, -1.851781e-002, 6.362829e-002, 2.409989e-002, 4.902994e-002, 2.121527e-002, 9.664842e-003, 5.135711e-002, 1.049000e-001, 3.554900e-002, 7.870214e-003, 4.943373e-002, 7.047027e-002, 5.927734e-002, 5.897419e-002, 4.553153e-002, 3.453610e-002, 1.750876e-002, -2.123172e-002, 2.629754e-002, 1.742448e-002, 2.539867e-002, 2.285462e-002, -3.636292e-003, -1.523039e-002, -1.532593e-002, -2.196230e-002, -3.828126e-002, -5.838726e-002, -5.812414e-002, 5.730612e-003, 8.884630e-003, -6.971326e-003, 7.568564e-003, -2.180658e-002, -3.423424e-002, 1.866407e-002, 8.075171e-002, 4.623567e-002, -4.944412e-002, -7.044576e-002, -5.247100e-002, -3.343635e-002, -1.559107e-002, -3.881554e-003, 1.261008e-002, -4.571365e-004, -2.219509e-002, 3.989140e-002, 2.548931e-002, 7.313855e-003, 1.736227e-002, 8.409981e-003, -7.785236e-003, -2.015297e-002, -3.352554e-002, -2.985993e-002, -9.417659e-003, 2.938178e-003, 1.759926e-002, -4.604689e-002, -6.971699e-002, -4.819986e-002, -6.466489e-002, -6.647890e-002, -1.629602e-002, 1.703446e-002, 1.716786e-002, -9.965350e-003, -6.468378e-002, -8.679564e-002, -7.791576e-002, -4.893975e-002, -1.348034e-002, 1.317593e-002, -9.716305e-003, -3.083232e-002, 3.591604e-002, 3.506373e-002, -2.024787e-003, -2.593762e-002, -1.246457e-002, 7.483676e-003, 2.935015e-002, 3.916489e-002, 4.393647e-002, 3.391726e-002, 1.707476e-002, -1.186384e-002, -5.622074e-002, -5.551702e-002, -2.160275e-002, -3.879935e-002, -4.332442e-002, -1.612625e-002, -2.885294e-002, -3.438802e-002, -1.753240e-002, -1.351129e-002, -2.345699e-002, -2.820133e-002, -1.080534e-002, 1.936098e-002, 1.952415e-002, -1.976312e-002, -3.664715e-002, 1.481139e-002, 3.050194e-002, 1.091693e-002, -3.237228e-002, -4.849711e-002, -2.983776e-002, 3.622278e-003, 2.624339e-002, 3.775639e-002, 3.594975e-002, 3.851737e-002, 9.096486e-003, 8.784255e-003, 5.860141e-002, 8.023972e-002, 5.224171e-002, 5.273778e-002, 5.365092e-002, -8.574581e-003, -6.172304e-002, -4.391633e-002, -1.272495e-002, -3.933518e-003, 4.046022e-003, 7.679688e-003, 1.985071e-002, 7.906770e-003, -3.572749e-002, -5.276586e-002, 4.368518e-005},
{4.838188e-003, 2.902398e-002, 3.969790e-002, 2.509338e-002, 1.068966e-002, -7.374164e-003, -9.123697e-003, -5.257520e-003, -2.531072e-003, -2.095135e-004, -1.202685e-002, -2.938409e-002, -3.546875e-002, -2.064365e-002, -1.208863e-002, -2.042245e-003, -1.034960e-003, 6.997437e-004, 9.944863e-003, 1.374322e-002, 7.146720e-003, 6.301853e-003, 2.085952e-002, 3.601267e-002, 2.112142e-002, -1.203708e-002, -1.693715e-002, 3.498662e-003, -2.463518e-003, -2.451315e-002, -7.126543e-003, 7.790722e-003, 2.680598e-003, -9.591407e-003, -3.625457e-003, 7.895441e-003, 1.986371e-002, 2.817692e-002, 1.297530e-002, -8.492569e-003, -2.972925e-002, -3.660904e-002, -1.434563e-002, 8.103629e-003, 1.093351e-002, 9.293530e-003, 6.468004e-003, 4.926600e-003, 6.495727e-003, 1.172823e-002, -5.526929e-003, -2.523690e-002, -7.396836e-003, 1.981137e-002, 1.086423e-002, -1.622364e-002, -9.750190e-003, 4.007142e-003, -3.084474e-002, -1.371853e-002, -1.196570e-003, -8.976142e-003, -2.347642e-003, 1.039679e-002, 3.266220e-002, 4.664454e-002, 4.429062e-002, 2.199822e-002, -5.093555e-003, -2.926838e-002, -3.833802e-002, -1.571947e-002, 1.344022e-002, 3.343938e-002, 3.744708e-002, 3.291219e-002, 9.643367e-003, -6.724906e-003, 1.290863e-002, 2.703288e-002, 5.072818e-003, -2.019549e-002, -4.396722e-003, 1.812153e-002, 1.134766e-002, -4.833086e-003, -5.942386e-003, -2.535137e-002, -4.443569e-003, -1.352563e-002, -1.836687e-002, -1.237482e-002, -2.408179e-003, 1.075078e-002, 2.927497e-002, 3.657808e-002, 2.572445e-002, 1.779232e-003, -2.734678e-002, -4.906830e-002, -3.865986e-002, -3.363247e-003, 3.134782e-002, 4.703542e-002, 5.452694e-002, 2.467003e-002, -4.974005e-003, -5.931012e-003, 2.721820e-002, 4.116074e-002, 1.799547e-002, -1.796460e-002, -1.221710e-002, 1.318987e-002, 1.187153e-002, -2.140790e-002, 9.883048e-004, 5.933046e-003, -1.738004e-002, -3.556912e-002, -4.718635e-002, -5.921326e-002, -4.385364e-002, 3.396482e-004, 3.942270e-002, 5.039928e-002, 3.675455e-002, 8.987042e-003, -2.460980e-002, -3.170448e-002, -4.636635e-003, 3.157395e-002, 6.012975e-002, 8.017065e-002, 5.657589e-002, 1.487546e-002, -6.904647e-003, -6.752527e-003, 1.313391e-002, 1.128191e-002, -4.939653e-003, -1.936237e-002, -1.265472e-002, 3.113506e-003, -9.763379e-003, 1.614102e-003, 3.975958e-003, -2.102173e-002, -4.967455e-002, -7.476812e-002, -9.611336e-002, -7.743572e-002, -3.002882e-002, 3.607123e-002, 6.717840e-002, 6.083359e-002, 2.273612e-002, -2.084152e-002, -3.960728e-002, -2.810801e-002, 3.604853e-004, 3.594867e-002, 5.467977e-002, 4.672581e-002, 1.579958e-002, -1.544008e-002, -4.296812e-002, -4.909968e-002, -4.490340e-002, -4.224045e-002, -3.781284e-002, -3.807191e-002, -2.680663e-002, -9.798261e-003, 2.741878e-003, 1.682380e-002, 5.991468e-003, -2.914206e-002, -6.873659e-002, -8.603166e-002, -7.145841e-002, -3.313437e-002, 2.805326e-002, 6.718925e-002, 5.903436e-002, 1.565778e-002, -2.501139e-002, -5.285894e-002, -5.020011e-002, -3.335679e-002, -1.197301e-002, 9.104794e-003,


© ISO/IEC 2004 — All rights reserved

Copyright International Organization for Standardization
Provided by IHS under license with ISO
No reproduction or networking permitted without license from IHS
Not for Resale

1.289849e-002, 3.025229e-003, -1.434049e-002, -3.361931e-002, -5.591886e-002, -6.783451e-002, -7.402538e-002, -6.205457e-002, -3.355495e-002, -2.532077e-002, -2.217784e-002, 1.000203e-002, 4.399497e-002, 4.456219e-002, 1.796396e-002, -2.230427e-002, -4.434804e-002, -4.120762e-002, -7.716177e-003, 3.747684e-002, 6.110233e-002, 5.081469e-002, 1.776911e-002, -1.653431e-002, -5.054471e-002, -4.450353e-002, -2.802126e-002, -2.284933e-002, -1.223578e-002, -4.965710e-003, -1.155623e-003, 5.068248e-003, 4.509390e-003, -9.965110e-003, -1.925045e-002, -3.710850e-002, -3.916447e-002, -2.545910e-003, 1.454141e-002, -6.112947e-004, 1.867444e-002, 6.140789e-002, 7.520879e-002, 5.452169e-002, 1.152155e-002, -1.743839e-002, -2.487034e-002, -3.322761e-003, 2.593397e-002, 3.663697e-002, 2.819690e-002, 1.318178e-002, -1.628903e-002, -4.106087e-002, -3.559945e-002, -2.273382e-002, -1.789374e-002, -2.161918e-002, -2.434125e-002, -1.196305e-002, 6.538678e-003, 2.303431e-002, 3.279870e-002, 3.444864e-002, 1.886153e-002, 1.151737e-002, 2.094217e-002, 4.940669e-002, 2.837033e-002, 1.950703e-002, 5.792669e-002, 7.456890e-002, 5.496153e-002, 2.294106e-002, -1.077330e-002, -3.526881e-002, -2.941541e-002, -4.085682e-003, 1.319033e-002, 9.912378e-003, -6.319222e-003, -1.974227e-002, -2.741781e-002, -2.337018e-002, -1.179749e-002, -5.589592e-003, -1.649155e-002, -2.941326e-002, -2.721071e-002, -1.673882e-002, 3.639094e-003, 3.165381e-002, 5.493542e-002, 5.076029e-002, 4.576583e-002, 3.537122e-002, 6.001372e-002, 3.420598e-002, 1.055908e-002, 3.368773e-002, 3.876697e-002, 3.036029e-002, 1.590298e-002, -2.008772e-002, -4.414809e-002, -5.070721e-002, -2.226324e-002, 3.083704e-003, 1.166832e-002, 1.324319e-003, -8.972505e-003, -5.128625e-003, 3.014845e-003, 2.810285e-003, 6.597188e-003, -4.786510e-003, -2.190191e-002, -3.113393e-002, -3.879516e-002, -2.553663e-002, 3.419975e-003, 2.971389e-002, 4.435699e-002, 5.349393e-002, 5.593918e-002, 5.577820e-002, 2.188413e-002, -1.614790e-002, -7.270497e-003, 1.009603e-002, 2.100188e-002, 1.859007e-002, -8.686479e-003, -3.415194e-002, -4.792172e-002, -2.282516e-002, 1.235022e-002, 3.522499e-002, 2.880964e-002, 8.759068e-003, 1.208563e-002, 1.500199e-002, 2.117207e-002, 2.593359e-002, 2.045365e-002, -1.746718e-003, -1.443666e-002, -2.494465e-002, -2.128834e-002, -1.104380e-002, 2.536578e-003, 1.122845e-002, 2.975602e-002, 5.222872e-002, 3.960852e-002, -8.848078e-003, -4.468734e-002, -3.144516e-002, 1.786363e-002, 5.215884e-002, 4.514972e-002, 1.684564e-002, -1.769811e-002, -4.134207e-002, -2.347006e-002, 1.126114e-002, 4.526014e-002, 4.355528e-002, 2.145500e-002, 1.176508e-002, 1.200067e-002, 2.252368e-002, 3.562539e-002, 4.516014e-002, 2.663937e-002, 5.533035e-003, -6.124539e-003, -8.189240e-003, -3.615369e-003, -5.328670e-003, -1.415159e-003, 1.057864e-002, 3.593512e-002, 1.124474e-002, -4.007297e-002, -5.938587e-002, -2.282113e-002, 4.783032e-002, 7.236794e-002, 3.649544e-002, -6.774055e-003, -5.077383e-002, -8.636815e-002, -7.474847e-002, -2.329582e-002, 2.237824e-002, 3.543729e-002, 1.581555e-002, -4.331676e-003, -1.036754e-002, -1.606672e-003, 1.725233e-002, 3.449130e-002, 2.229057e-002, -1.142460e-002, -3.293689e-002, -2.859843e-002, -2.158660e-002, -2.659724e-002, -2.220589e-002, -4.565127e-003, 2.084526e-002, 2.557654e-004, -6.864461e-002, -3.332489e-002, 6.699025e-003, 2.456449e-002, 1.903106e-003, -1.518276e-002, -2.675609e-002, -3.706028e-002, -4.699044e-002, -4.764419e-002, -1.269158e-002, 2.141759e-002, 3.279917e-002, 5.410442e-003, -1.989679e-002, -3.036746e-002, -1.616061e-002, 6.071007e-003, 4.995279e-002, 6.608165e-002, 4.618682e-002, 3.731081e-002, 2.770995e-002, 1.506356e-002, -6.480166e-003, -3.722048e-002, -5.841608e-002, -1.450191e-002, -3.344350e-004, -7.341800e-002, -3.319965e-003, -1.541881e-002, -4.278293e-002, -3.185642e-002, 1.860325e-004, 2.115633e-002, 1.438267e-002, -7.527845e-003, -2.339074e-002, -8.040391e-003, 1.973771e-002, 2.900680e-002, 9.678454e-004, -2.822439e-002, -4.303905e-002, -1.584923e-002, 2.455734e-002, 5.041165e-002, 3.904692e-002, 1.638422e-002, 2.986973e-002, 5.673382e-002, 7.264359e-002, 6.430207e-002, 1.678141e-002, -7.229047e-002, -9.263649e-002, -2.186962e-002, -4.969188e-002, 2.991864e-002, -1.419099e-002, -1.356192e-003, 5.846085e-002, 9.690377e-002, 8.371036e-002, 4.292153e-002, -1.887014e-002, -5.702076e-002, -5.851566e-002, -3.402969e-002, -2.006519e-002, -1.271681e-002, -3.228956e-002, -2.871651e-002, 1.099005e-002, 2.707632e-002, -8.285642e-003, -6.062866e-002, -7.014211e-002, -5.526115e-002, -1.628759e-002, 4.608592e-002, 7.650595e-002, 6.176361e-002, -1.781580e-003, -7.942897e-002, -4.127396e-002, -2.521082e-002, 4.097354e-002, -1.463310e-002, -3.621710e-002, -2.092691e-002, -2.287037e-002, -1.703481e-002, -1.617163e-002, -3.483067e-002, -2.897079e-002, -2.181213e-003, 1.168636e-002, 1.170962e-002, -7.551793e-003, -5.821710e-002, -3.387180e-002, 3.690439e-002, 4.266665e-002, -4.542279e-003, -1.468832e-002, -2.427413e-003, -1.219540e-002, -2.180389e-003, 3.178700e-003, 3.072782e-003, 1.620447e-002, 5.105312e-003, -4.289868e-002, -1.117177e-002, 1.373621e-002, 3.331528e-002, -4.183359e-002, -6.462689e-002, -3.882566e-002, 7.268203e-003, 8.717204e-002, 1.020049e-001, 1.468822e-002, -4.818672e-002, 1.757632e-002, 7.222355e-002, 6.491321e-002, 4.298566e-002, -4.069746e-002, -4.982530e-002, 6.655496e-003, 1.349744e-002, -7.342911e-003, 3.410824e-002, -6.724041e-003, -6.010364e-002, -1.738539e-002, 1.050825e-003, -4.190544e-002, -5.813509e-002, -4.633678e-002, -4.780759e-002, 6.019386e-003, 7.064545e-002, -1.052368e-002, -3.499498e-002, -2.521084e-002, -7.064165e-003, -3.014955e-002, 4.682764e-002, 8.153870e-002, -7.501537e-003, -8.100011e-002, -5.887855e-002, -3.871346e-003, 3.026326e-002, 4.779994e-002, 1.557212e-002, 5.679024e-003, -6.897994e-003, -6.854130e-002, -7.327854e-002, -5.282761e-002, -7.205357e-002, -1.003803e-001, 1.216239e-002, 1.134115e-001, 6.677224e-003, -7.668019e-002, -

© ISO/IEC 2004 — All rights reserved


--`,,```,,,,````-`-`,,`,,`,`,,`---
Copyright International Organization for Standardization
Provided by IHS under license with ISO
No reproduction or networking permitted without license from IHS
Not for Resale

2.033026e-002, -4.111655e-003, -1.358928e-002, 1.365518e-002, 1.307601e-002, 3.047250e-002, 2.325017e-002, 2.104006e-002, 3.908395e-002, 2.035270e-002, -1.061983e-004, 1.077204e-002, 1.131831e-001, 4.353566e-002, -1.565425e-003, 1.928871e-003, 1.857763e-002, 2.766987e-002, 4.703260e-002, 1.332368e-002, -6.637665e-002, -4.944798e-002, -5.207953e-002, 6.524895e-002, 1.098601e-002, -8.177988e-002, 2.331420e-002, 4.898509e-003, 8.162198e-003, 3.815134e-002, 4.342249e-002, -5.697925e-004, -4.214345e-002, 1.044212e-002, 3.267772e-002, 1.518002e-002, 9.030028e-003, 3.117822e-002, 3.313813e-002, -1.685175e-002, -1.924407e-003, 2.205853e-002, -2.177373e-002, -2.631118e-002, -1.185160e-002, -2.324804e-002, -2.511992e-003, 4.260474e-002, 2.388841e-002, -2.120344e-002, 2.974534e-002, -1.454824e-002, 1.465078e-002, 3.153338e-002, -4.307899e-002, -3.582211e-002, -7.564618e-003, -4.645156e-002, -4.929738e-002, -1.407499e-002, -2.710474e-002, -5.241634e-002, -1.913178e-002, -1.266562e-002, -1.485685e-002, 1.632974e-002, 5.760328e-002, 4.520712e-002, 1.463836e-002, -2.134087e-002, -6.153406e-002, -9.443050e-002, -4.142061e-002, -7.945914e-004, -3.715842e-002, -1.756586e-002, 1.236442e-002, 1.829570e-002, -1.052936e-002, 1.004000e-001, 2.488235e-002, -3.436448e-003, 2.024085e-002, 2.048883e-002, 2.185717e-002, 3.719669e-002, 1.992160e-002, -1.665368e-002, -1.972268e-002, -2.512813e-002, -4.297106e-002, -1.241780e-002, -2.764778e-002, -2.542486e-002, 1.607071e-002, 5.249105e-002, 3.315430e-002, 4.542071e-003, -4.333245e-002, -8.489997e-002, -5.998802e-002, 3.234384e-002, 2.342927e-002, -3.851734e-002, -2.557544e-002, -8.297761e-003, 6.828963e-003, -8.412449e-003, 1.082244e-001, 1.107394e-001, -1.367587e-003, -9.151659e-003, 1.987518e-002, 5.103526e-002, 7.470445e-002, 6.795517e-002, 1.893066e-002, 6.682370e-003, 2.608236e-005, -1.337510e-003, -7.824494e-004, -2.867892e-002, -2.248576e-002, 1.305586e-002, 2.707377e-002, -1.333771e-003, -2.746522e-002, -4.617145e-002, -2.688858e-002, 5.699955e-002, 9.283293e-002, 2.086703e-003, -4.373405e-002, -3.243414e-002, -2.081607e-002, -5.202507e-003, -8.180802e-003, 2.325238e-002, 1.146521e-001, 5.221148e-002, -2.578224e-002, -3.284462e-002, 7.056425e-003, 4.542180e-002, 6.322783e-002, 4.301161e-002, 3.088964e-002, 1.949814e-002, 4.296086e-002, -2.795065e-003, -5.371393e-003, -1.792951e-002, 1.686817e-002, 1.355088e-002, -1.369245e-002, -2.226760e-002, -2.231638e-003, 5.518950e-002, 1.031516e-001, 4.597239e-002, -8.287345e-003, -3.502057e-002, -3.686324e-002, -2.215812e-002, -1.277553e-002, -9.342175e-003, -1.916024e-002, 3.002558e-003, 1.030813e-002, -1.564615e-002, -3.993883e-002, -2.852575e-002, 8.544683e-003, 3.961787e-002, 2.599276e-002, 1.495719e-002, 3.225672e-002, 5.628432e-002, -2.338447e-003, -4.602699e-003, -1.818087e-002, -2.450921e-003, -5.758127e-003, -2.178812e-002, -1.318704e-002, 1.579331e-002, 4.693293e-002, 3.820066e-002, 1.282371e-002, 1.557084e-002, -1.771343e-002, -3.389205e-002, -9.412013e-003, 1.125903e-002, 4.709282e-003, -1.600873e-002, -2.455384e-002, -5.255646e-002, -8.337578e-002, -1.008276e-001, -1.057684e-001, -7.890565e-002, -3.623028e-002, -1.628619e-002, -2.078000e-004, 3.303433e-002, 7.137346e-002},
{2.123217e-002, 5.423423e-003, -1.565793e-002, -2.723862e-002, -2.352118e-002, -9.203783e-003, -6.721521e-003, -1.043560e-002, -9.185617e-003, 1.140029e-002, 4.180269e-002, 5.119881e-002, 5.447340e-002, 3.167808e-002, 4.928797e-003, -1.367562e-002, -2.291624e-002, -2.223513e-002, -1.092886e-002, -9.357628e-003, -6.423616e-003, -4.159509e-003, -7.152998e-003, -5.523603e-003, 4.169673e-003, -5.952158e-003, -2.921112e-002, -2.031200e-002, 9.026238e-003, 4.665707e-002, 1.998723e-002, -1.499955e-003, -2.406989e-003, 9.359351e-003, 5.495539e-003, -1.436826e-002, -2.771581e-002, -2.445388e-002, 8.368542e-003, 4.647649e-002, 6.256079e-002, 6.006199e-002, 2.484571e-002, -1.683896e-002, -4.060468e-002, -5.332512e-002, -4.851535e-002, -2.588105e-002, -1.369417e-002, -3.328269e-003, 3.969113e-003, 5.611157e-003, 4.231370e-003, 8.250109e-004, 2.533477e-002, 2.639108e-002, -3.725286e-004, 1.777388e-002, 3.095782e-002, -1.428610e-004, 9.254472e-003, 2.371017e-002, 2.114910e-002, -3.549489e-003, -3.395238e-002, -4.035214e-002, -2.747089e-002, 7.199408e-003, 3.691796e-002, 5.257739e-002, 4.737173e-002, 2.607962e-002, -9.393259e-003, -3.974558e-002, -5.343803e-002, -4.928149e-002, -2.933863e-002, -1.166055e-002, -1.387292e-002, -1.170479e-002, -3.058236e-003, -1.756883e-003, -8.196412e-003, -6.886735e-003, 2.056251e-002, 2.188517e-002, 1.257549e-002, -6.591194e-003, 4.501567e-003, 2.683891e-002, 3.514177e-002, 2.432646e-002, -1.114377e-003, -1.995020e-002, -2.372983e-002, -1.916566e-002, -1.097453e-002, 6.004502e-003, 2.864753e-002, 3.851424e-002, 3.579710e-002, 2.233262e-002, 5.561511e-004, -7.730171e-003, -8.878027e-003, 1.012658e-002, 2.117701e-002, 1.492140e-002, -7.402788e-003, -3.236046e-002, -2.711673e-002, -1.322690e-002, -1.449001e-002, -5.792700e-003, 1.675408e-002, 2.728987e-002, -1.989057e-002, 8.064333e-003, 1.476988e-002, 1.983397e-002, 1.828799e-002, 2.004888e-002, 1.216821e-002, -2.562279e-002, -5.174309e-002, -5.321947e-002, -4.303644e-002, -2.025508e-002, 4.135322e-003, 2.765021e-002, 2.889068e-002, 1.685478e-002, 8.002081e-003, 7.542853e-003, 1.798910e-002, 3.654148e-002, 4.304082e-002, 2.836323e-002, -1.099413e-002, -3.512841e-002, -2.829015e-002, -7.679843e-003, 5.315760e-003, -1.064919e-003, 2.304570e-002, -1.489055e-002, -1.449609e-002, -1.310220e-002, 5.839273e-004, 2.145251e-002, 2.418366e-002, -3.321982e-003, -4.143630e-002, -6.090678e-002, -5.104996e-002, -3.650472e-002, -2.712533e-002, -1.324094e-002, 8.186020e-004, 5.108946e-003, -7.058471e-003, -1.125512e-002, -3.896968e-003, 5.239730e-003, 2.304417e-002, 3.557960e-002, 3.659850e-002, 2.379135e-002, -3.197202e-003, -1.741782e-002, 5.308264e-003, 2.221061e-002, 7.657482e-003, -5.930952e-003, -1.900377e-002, -2.945354e-002, -


© ISO/IEC 2004 — All rights reserved

Copyright International Organization for Standardization
Provided by IHS under license with ISO
No reproduction or networking permitted without license from IHS
Not for Resale

2.300674e-002, 3.892982e-004, 9.491386e-003, -7.565717e-003, -3.050807e-002, -3.330549e-002, -1.049144e-002, 1.672862e-002, 3.105866e-002, 1.411519e-002, 5.502777e-003, -8.618799e-004, -1.445099e-002, -1.216991e-002, -1.316631e-002, -1.356877e-002, -7.038779e-003, -1.110780e-003, 4.870131e-004, 1.807308e-003, 7.733236e-003, 1.356702e-002, -3.008962e-003, 8.839026e-003, 2.998069e-002, 2.221346e-002, -9.274564e-003, -1.227172e-002, -1.513129e-002, -1.185294e-002, -1.170875e-002, -1.669124e-002, -3.306580e-002, -3.943140e-002, -9.178501e-003, 4.037464e-002, 7.526031e-002, 8.046180e-002, 5.181829e-002, 2.421731e-002, 7.386110e-003, -1.044285e-002, -7.615043e-003, -3.203593e-003, 1.953382e-003, -1.537290e-003, -4.826370e-003, -1.641313e-002, -2.427090e-002, -2.129855e-002, -3.349732e-003, 7.457634e-004, 1.500990e-002, 3.769197e-002, 3.370507e-002, -1.080492e-002, 7.120268e-004, 4.446024e-003, -4.725523e-003, -1.216348e-002, -2.678293e-002, -3.989479e-002, -3.676019e-002, 3.427082e-003, 4.362190e-002, 7.015990e-002, 7.087807e-002, 3.124599e-002, 9.718200e-003, -3.247142e-003, -6.349769e-003, 3.629532e-003, 1.210343e-002, 1.355120e-002, 9.355232e-003, 1.666930e-003, -2.387679e-002, -3.909362e-002, -4.256308e-002, -2.880172e-002, -1.403206e-002, 7.127293e-003, 3.629270e-002, 3.758420e-002, -1.888403e-002, 4.379768e-003, 6.689938e-003, -4.649578e-004, -3.698951e-003, -2.702843e-002, -3.149937e-002, -1.375606e-002, 1.013478e-002, 2.671314e-002, 3.511614e-002, 2.418988e-002, -9.090412e-003, -2.456150e-002, -2.990881e-002, -2.775806e-002, -9.582009e-003, 1.495626e-004, 3.400291e-003, 1.492576e-002, 1.425907e-002, -3.961290e-003, -2.140293e-002, -2.772840e-002, -1.672104e-002, -1.101318e-002, -2.581268e-003, 2.472893e-002, 2.798677e-002, -1.775301e-002, -7.774768e-003, 3.066921e-004, 6.241662e-003, 5.028616e-003, -5.361198e-003, -5.550485e-003, 8.173168e-003, 1.711844e-002, 6.300393e-003, -5.597325e-003, -2.420676e-002, -3.887798e-002, -4.127201e-002, -3.978759e-002, -3.632662e-002, -2.095811e-002, -1.374744e-002, -1.116535e-002, 1.145892e-003, 1.112740e-002, 1.320774e-002, 8.942530e-003, 8.791239e-003, 1.289900e-002, 7.572321e-003, -3.553366e-003, 7.813844e-003, 5.362607e-003, -2.566180e-002, -1.890213e-002, 2.902732e-003, 1.749512e-002, 2.129549e-002, 2.250020e-002, 2.045021e-002, 1.635609e-002, 9.500076e-003, -4.117847e-003, -1.723804e-002, -3.012872e-002, -2.928003e-002, -1.634536e-002, -5.477525e-003, 2.770509e-003, 3.422511e-003, -4.787586e-003, -1.068186e-002, -5.479184e-003, 8.984480e-003, 1.746863e-002, 1.915312e-002, 1.798008e-002, 2.724722e-002, 2.472462e-002, 8.404075e-003, -4.558764e-003, -1.383231e-002, -4.782339e-002, -1.876499e-002, 2.045025e-002, 2.328634e-002, 2.199663e-002, 2.950096e-002, 3.076619e-002, 1.739293e-002, 3.981528e-003, -7.738561e-003, -1.824491e-002, -1.931863e-002, -2.722103e-003, 1.933697e-002, 3.577145e-002, 3.948621e-002, 2.640554e-002, 7.600456e-003, -7.131798e-003, -1.259239e-002, 2.108133e-003, 9.384750e-003, 6.095901e-003, 8.681944e-003, 1.247717e-002, 1.767593e-002, 1.894594e-002, 6.202843e-003, -1.305027e-002, -5.440609e-002, -6.320192e-003, 2.398033e-002, -2.728491e-002, -3.053289e-002, 9.683571e-003, 4.074374e-002, 3.577720e-002, 2.180166e-002, -1.070634e-002, -3.755535e-002, -3.817570e-002, -8.137888e-003, 2.676220e-002, 5.389206e-002, 5.313164e-002, 3.230498e-002, -2.234029e-003, -2.351426e-002, -1.499160e-002, 1.678001e-002, 3.227940e-002, 3.704190e-002, 2.188848e-002, -4.934225e-003, -1.648261e-002, -7.027200e-003, 4.835839e-003, 2.576332e-003, -4.597770e-002, -1.128770e-002, -3.054061e-002, -1.145954e-001, -9.299269e-002, -3.309433e-002, 1.941314e-002, 2.711358e-002, 1.708014e-002, -2.362505e-002, -6.878347e-002, -8.971873e-002, -5.846976e-002, -9.563016e-003, 3.309347e-002, 3.750844e-002, 1.502352e-002, -3.516542e-002, -6.434913e-002, -3.381272e-002, 2.093221e-002, 6.282268e-002, 8.619303e-002, 6.441638e-002, -2.858872e-004, -5.601815e-002, -6.163034e-002, -2.984331e-002, 1.028144e-002, -2.513290e-002, -1.066968e-003, -1.385513e-002, -5.567026e-002, -1.492308e-002, 2.787360e-002, 2.103358e-002, 5.504766e-003, 1.113323e-003, 8.808653e-003, -2.953322e-003, -3.669015e-002, -5.051308e-002, -2.087242e-002, 1.826979e-002, 2.285484e-002, -3.663781e-003, -5.089067e-002, -8.446156e-002, -7.369845e-002, -3.354623e-002, -2.084555e-003, 1.518992e-002, 2.088854e-002, 1.349396e-002, -1.730268e-002, -3.785002e-002, -3.224484e-002, 1.372518e-002, -1.133001e-002, 6.479081e-002, 8.785397e-002, 2.419758e-002, 4.610537e-002, 4.082252e-002, -2.695988e-002, -8.067954e-002, -6.929287e-002, -1.157246e-002, 3.297267e-002, 4.386562e-002, 4.212981e-002, 2.691948e-002, 2.320941e-002, 1.721121e-002, 8.590810e-003, -1.338997e-002, -2.936841e-002, -1.323846e-002, 3.774020e-003, -1.029548e-002, -3.635558e-002, -3.808012e-002, -1.888950e-002, -1.556779e-002, -2.060518e-002, 9.656625e-003, 4.455576e-002, 6.634003e-003, 5.915213e-002, 3.736517e-002, -1.224910e-002, 5.075906e-002, 7.415383e-002, 5.848486e-002, 5.277036e-002, 4.885165e-002, 4.025836e-002, 2.815082e-002, 2.973301e-002, 6.820969e-002, 9.006561e-002, 7.813302e-002, 6.299997e-002, 6.394418e-002, 6.379917e-002, 4.107913e-002, 4.230524e-002, 3.636260e-002, 1.136919e-002, -5.477873e-003, -1.842015e-002, -2.323806e-002, -3.827238e-002, -5.074115e-002, -5.497409e-003, 5.984742e-002, 1.089295e-002, -3.834489e-002, -4.642234e-002, -3.849345e-002, 4.712869e-002, 4.667940e-002, 1.602698e-002, 3.914375e-002, 6.744018e-002, 1.387524e-002, -2.253373e-002, -7.292119e-002, -5.841151e-002, 3.959055e-002, 6.625287e-002, 6.783374e-002, 6.783171e-002, 5.718378e-002, -1.755733e-002, -3.496443e-002, -6.272718e-002, -3.107222e-002, -1.313215e-002, -1.088965e-002, 2.077388e-004, 3.723759e-002, 1.094717e-002, -2.580775e-002, 6.695299e-003, -7.620194e-003, -5.261491e-002, -3.266104e-002, -6.272193e-002, 9.076268e-003, 1.721497e-002, -5.637796e-002, -2.144901e-002, 4.616244e-002, -9.676675e-002, -

© ISO/IEC 2004 — All rights reserved


Copyright International Organization for Standardization
Provided by IHS under license with ISO
No reproduction or networking permitted without license from IHS
Not for Resale

7.807797e-002, -9.954016e-002, -1.225040e-001, -5.275981e-002, -2.647719e-002, -3.455471e-002, -2.512288e-002, -1.005558e-002, -7.374472e-002, -8.248959e-002, -9.299294e-002, -2.790451e-003, 6.358982e-004, -6.184625e-002, -3.662430e-002, 8.890551e-002, 6.325907e-002, -3.255437e-002, -2.546295e-002, -3.034899e-002, 5.294272e-003, 2.274519e-002, -8.006557e-002, 2.267245e-002, 1.736177e-001, 5.305120e-002, -3.158697e-002, -6.350616e-002, -8.473045e-002, -3.432442e-002, -1.715157e-002, -4.424959e-002, -6.552155e-003, 4.136007e-003, -1.764458e-002, -1.896529e-002, 8.524036e-003, -9.491409e-003, -2.358294e-002, 1.728448e-002, 2.524104e-002, -2.847418e-002, -8.425051e-002, 3.549349e-002, 1.199427e-001, 2.188842e-002, -5.852875e-002, -2.603078e-002, -2.201831e-002, 4.286943e-002, 7.201642e-002, -2.675058e-002, 1.135647e-003, 8.924585e-002, 9.043669e-002, 2.859685e-002, 4.526095e-004, 8.828963e-003, 1.317361e-002, 3.627233e-002, 1.757710e-002, 7.034908e-003, 1.046040e-003, -8.344320e-003, -2.094169e-002, 1.154402e-002, 1.800469e-002, 9.742759e-003, 3.454291e-002, 7.734865e-002, 5.862392e-002, 6.820966e-002, 1.057088e-001, 4.591318e-002, -6.007383e-002, -7.706857e-002, -4.813366e-003, 1.166885e-002, 2.515714e-002, 9.280100e-002, 2.008154e-002, -1.959967e-002, -3.052922e-002, -5.309619e-002, -7.493261e-002, -6.594235e-002, -2.725847e-002, 2.628715e-002, 4.685290e-002, 9.070292e-003, -8.129041e-003, -2.181511e-003, -1.302730e-003, -2.394649e-002, 1.914996e-002, -9.607996e-003, -3.719341e-002, -3.296428e-002, -1.896096e-002, -1.698007e-002, -1.447830e-002, -1.790980e-002, -4.104028e-002, -7.176677e-002, -4.556836e-002, 3.611377e-002, 2.909055e-002, 3.945604e-004, 6.230869e-002, 5.088758e-002, 2.760715e-002, 1.229218e-002, 6.552788e-004, -1.079508e-002, -1.778310e-003, 2.648467e-002, 3.945434e-002, 6.957726e-003, -6.058656e-003, -2.702873e-002, 3.585423e-003, 9.802652e-003, -2.185973e-002, 1.553643e-002, -1.115872e-002, -5.205106e-002, -4.548816e-002, -2.056351e-002, -2.548246e-003, 6.136945e-003, 8.456107e-003, -4.216952e-003, -1.540800e-002, 6.165735e-003, 5.291460e-002, 2.322585e-002, -2.350889e-002, 2.199492e-004, 2.695330e-002, 5.226313e-002, 7.123753e-002, 6.765595e-002, 6.139260e-002, 5.052545e-002, 3.765677e-002, 4.192086e-003, -1.611499e-002, -2.513457e-002, -2.947894e-002, 1.472800e-002, 1.791006e-002, -2.950195e-002, 1.325810e-002, 2.417558e-002, -2.587548e-002, -3.948672e-002, -2.976314e-003, 3.996427e-002, 6.696225e-002, 7.478159e-002, 6.049813e-002, 3.687137e-002, 3.055148e-002, 4.034675e-002, 1.176337e-002, -3.531652e-002, -6.389995e-002, -5.842459e-002, -1.196947e-002, 3.144935e-002, 4.328908e-002, 3.567419e-002, 7.646052e-003, -2.514891e-002, -2.765285e-002, 9.099804e-003, -8.808585e-003, -1.461260e-002, 2.056092e-002, 1.928463e-002, -3.290580e-002, -2.318795e-002, 5.089930e-002, 2.146706e-002, -4.393709e-002, -2.506334e-002, 1.969898e-002, 5.564894e-002, 7.306199e-002, 5.649970e-002, 1.259027e-002, -8.068964e-003, 8.412933e-003, 9.540386e-004, -3.712589e-002, -8.603539e-002, -1.052737e-001, -9.100440e-002, -7.398065e-002, -7.042817e-002, -8.402919e-002, -8.831756e-002, -5.238319e-002, 2.620463e-002, 6.228281e-002, 1.242096e-002, -6.160379e-004, 2.997768e-002, 4.297181e-002, -2.152471e-002, -4.586057e-002, 3.839706e-002, 7.614089e-002, -2.655903e-002, -8.655912e-002, -8.050410e-002, -5.108225e-002, -2.771814e-002, -3.272480e-002, -5.002968e-002, -3.263599e-002, 2.622272e-003, 1.016073e-003},
{6.857457e-002, -3.906386e-003, -5.735906e-002, -6.071651e-002, -3.570658e-002, -1.643790e-002, 1.767385e-002, 4.763195e-002, 6.681134e-002, 5.338710e-002, 2.219452e-002, 4.957925e-003, 9.819442e-004, 4.745689e-003, 6.940429e-003, -3.610339e-003, -1.905678e-002, -2.409498e-002, -4.228445e-003, 2.624745e-002, 4.284755e-002, 3.449599e-002, 2.454574e-002, 1.493821e-002, 2.166860e-002, 2.007491e-002, 9.684713e-003, 3.156225e-002, 6.999521e-002, 2.912370e-002, -3.085533e-002, -2.392967e-002, -1.355022e-002, -2.622819e-002, -2.219345e-002, 1.664615e-002, 4.939948e-002, 3.895644e-002, -3.014552e-003, -4.317741e-002, -5.378880e-002, -3.946147e-002, -1.576411e-002, -1.591782e-003, -6.451336e-003, -1.937768e-002, -2.883612e-002, -2.228022e-002, 9.838751e-005, 2.510772e-002, 2.915634e-002, 8.928013e-003, -7.446105e-003, -5.509961e-003, -5.109787e-003, -5.987047e-003, -2.327321e-002, 2.455571e-003, 1.531485e-002, 1.319352e-002, 2.838587e-002, -1.071235e-002, -5.897712e-002, -2.631804e-002, 3.377780e-002, 5.008981e-002, 1.148172e-002, -4.441039e-002, -7.349364e-002, -6.286138e-002, -2.212724e-002, 8.757599e-003, 2.738733e-002, 2.265105e-002, 1.269882e-003, -1.444584e-002, -2.915069e-002, -9.815270e-003, 1.910991e-002, 1.879673e-002, 2.244819e-003, -1.820225e-002, -2.251020e-002, -7.328375e-003, 2.280370e-002, -8.057395e-003, -3.407583e-002, 2.350220e-002, 4.195254e-002, 2.981926e-002, -3.421012e-002, -5.425500e-002, -2.530111e-003, 3.965751e-002, 3.858284e-002, 1.081878e-003, -3.769539e-002, -4.959510e-002, -3.709261e-002, 1.722436e-002, 4.863020e-002, 6.056347e-002, 4.693923e-002, 1.544594e-002, -1.925876e-002, -5.184911e-002, -4.313941e-002, -3.742416e-004, 3.174661e-002, 2.341336e-002, -1.104811e-002, -2.876761e-002, -2.255662e-002, 1.056548e-002, 1.774539e-002, -3.390728e-002, 1.751100e-002, 3.065306e-002, 9.876451e-003, -2.733454e-002, -1.330225e-002, 2.560098e-002, 5.519489e-002, 4.493659e-002, 7.738945e-003, -2.966681e-002, -3.430214e-002, -3.310903e-002, 5.536668e-003, 3.974405e-002, 4.840380e-002, 4.372268e-002, 1.137196e-002, -2.485808e-002, -6.314032e-002, -7.022167e-002, -2.552033e-002, 3.375444e-002, 4.186376e-002, 1.621404e-002, -1.310121e-002, -1.971606e-002, -4.867975e-003, 2.074036e-002, -5.135068e-003, -1.542075e-002, 1.110633e-002, 1.334129e-002, -2.250834e-002, -1.357886e-002, 1.853136e-002, 4.535486e-002, 4.371389e-002, 3.013447e-002, 2.788776e-003, -2.781712e-002, -5.358513e-002, -4.084619e-002, -9.552323e-003, 1.349132e-002,


© ISO/IEC 2004 — All rights reserved

Copyright International Organization for Standardization
Provided by IHS under license with ISO
No reproduction or networking permitted without license from IHS
Not for Resale

3.760838e-002, 3.268692e-002, -3.209632e-003, -4.419910e-002, -6.216639e-002, -3.498215e-002, 2.346115e-002, 5.998469e-002, 4.144579e-002, 2.348391e-004, -1.060448e-002, 3.311895e-003, 1.044620e-002, 5.243824e-003, -4.395773e-002, 1.785199e-002, 2.343173e-003, -5.589995e-002, -5.114643e-002, -1.223258e-002, 3.279444e-002, 4.793341e-002, 5.085756e-002, 3.274238e-002, -4.956952e-003, -4.856761e-002, -5.833563e-002, -4.122657e-002, -1.284142e-003, 4.174682e-002, 6.529201e-002, 4.539470e-002, 8.243822e-003, -2.017020e-002, -1.759660e-002, 1.579953e-002, 6.331536e-002, 6.563055e-002, 1.726400e-002, -4.698985e-003, 1.444725e-002, 6.339762e-003, -1.426787e-002, -5.281071e-002, 2.977227e-002, -2.097574e-002, -9.437294e-002, -8.081458e-002, -1.666722e-002, 2.455695e-002, 4.296082e-002, 4.935394e-002, 3.601183e-002, 5.785841e-003, -3.098754e-002, -4.956896e-002, -4.749493e-002, -1.550274e-002, 3.657139e-002, 7.686976e-002, 7.302119e-002, 3.961411e-002, 1.364621e-002, 1.829038e-004, 1.508059e-002, 4.538295e-002, 6.016745e-002, 2.423324e-002, -1.800353e-002, 3.040840e-003, -2.288562e-003, -3.905267e-002, -4.761052e-002, 3.153549e-002, -4.200688e-002, -9.068018e-002, -5.050313e-002, -5.123603e-003, 7.612125e-003, 1.266203e-002, 9.576326e-003, 1.257206e-002, 7.043886e-003, -1.183656e-002, -2.906602e-002, -4.400017e-002, -3.881607e-002, -1.505224e-003, 3.936018e-002, 4.484640e-002, 2.575464e-002, 5.078410e-003, -5.186140e-003, 3.757573e-003, 1.616495e-002, 2.434310e-002, 1.506910e-002, -3.044969e-002, -3.271360e-002, -1.168280e-002, -4.786071e-002, -2.839732e-002, 4.111005e-002, -3.731941e-002, -3.821580e-002, 2.915957e-003, 1.215572e-002, -6.054054e-003, -2.234655e-002, -2.352288e-002, -5.192137e-003, 1.626402e-002, 1.458553e-002, 6.774643e-004, -2.618234e-002, -4.400074e-002, -4.206468e-002, -2.453640e-002, -1.199104e-002, -1.785151e-002, -3.165794e-002, -3.569163e-002, -2.522078e-002, -2.650947e-002, -1.573556e-002, -2.428634e-003, -3.400222e-002, -5.069933e-002, -1.836798e-002, -4.473908e-002, -2.111412e-003, 4.140973e-002, -4.867858e-003, 2.209816e-002, 4.813314e-002, 1.633635e-002, -2.882542e-002, -5.528099e-002, -4.406213e-002, -1.906408e-002, 1.611076e-002, 3.481905e-002, 2.678059e-002, 7.885670e-004, -2.250128e-002, -4.438105e-002, -5.903653e-002, -5.035281e-002, -4.240852e-002, -5.162566e-002, -4.686543e-002, -4.652260e-002, -4.098849e-002, -2.882295e-002, -1.409900e-002, -2.626489e-002, -4.838288e-002, -5.227490e-003, -1.498151e-002, 2.048932e-002, 4.183917e-002, 3.796348e-002, 7.849623e-002, 7.739055e-002, 2.536333e-002, -2.394886e-002, -4.750249e-002, -4.514504e-002, -2.736196e-002, 1.465423e-002, 4.379282e-002, 4.152154e-002, 2.653535e-002, 5.068468e-003, -1.822055e-002, -3.320021e-002, -3.171333e-002, -2.132872e-002, -2.056231e-002, -1.366670e-002, -1.281671e-002, -1.496252e-002, -9.654275e-003, 1.583982e-003, -7.595380e-003, -3.705614e-002, 9.698358e-003, 2.203963e-002, 3.206154e-002, 3.139117e-002, 4.894732e-002, 7.839950e-002, 7.107366e-002, 2.705975e-002, -3.920991e-003, -2.799613e-002, -3.434979e-002, -2.470483e-002, 1.170987e-002, 4.733563e-002, 5.511697e-002, 5.212675e-002, 4.183203e-002, 2.487927e-002, 1.378660e-002, 1.516279e-002, 3.428389e-002, 4.797580e-002, 4.947207e-002, 4.342117e-002, 3.435318e-002, 2.601049e-002, 2.761896e-002, 2.149466e-002, -1.017823e-002, 1.613402e-002, 6.234320e-002, 2.312354e-002, -1.237530e-002, -7.285104e-003, 1.415045e-002, 1.495101e-002, -2.437549e-003, -2.114013e-002, -3.802919e-002, -4.346128e-002, -2.602973e-002, 2.339603e-004, 2.524022e-002, 3.641464e-002, 4.128257e-002, 3.886507e-002, 3.478810e-002, 3.375860e-002, 4.703571e-002, 6.014092e-002, 6.456336e-002, 4.798298e-002, 1.975562e-002, -3.877160e-003, -2.127817e-002, -8.748261e-003, 3.249435e-003, -5.550004e-003, -2.339199e-003, 6.684686e-002, 1.042120e-002, -6.492843e-002, -6.124399e-002, -1.414996e-002, -5.489531e-004, 4.939698e-003, 1.189639e-002, 1.102067e-002, -2.923265e-003, -1.049203e-002, -6.250990e-004, 7.569728e-004, -1.383049e-003, -8.063740e-004, -7.426722e-003, -1.085737e-002, -7.993416e-003, 2.328490e-003, 2.375498e-003, -1.106754e-002, -1.545606e-002, -2.271316e-002, -4.045789e-002, -5.658780e-002, -3.751838e-002, -5.087103e-003, -1.793763e-002, -4.274025e-002, 3.656044e-002, 1.795724e-002, -3.136637e-002, -9.385882e-004, 3.414769e-002, 2.056141e-002, 6.755208e-003, -5.159434e-003, -1.429187e-002, -2.363557e-002, -2.069598e-002, -5.148591e-003, -1.675096e-002, -4.026517e-002, -5.185293e-002, -5.696671e-002, -6.989308e-002, -5.796562e-002, -2.890581e-002, -8.385475e-003, 2.638945e-004, 1.203466e-002, 1.855553e-002, 9.055693e-003, -5.328198e-003, 1.147075e-002, 8.034572e-002, 6.574444e-002, -2.549835e-002, 3.506610e-003, 6.680382e-002, 1.935024e-002, 1.657789e-002, 9.431703e-003, -7.309282e-003, -1.157997e-002, -1.483617e-002, -1.861795e-002, -1.116479e-002, -3.995052e-003, 2.245918e-002, 4.235390e-002, -4.770436e-003, -5.030552e-002, -6.500512e-002, -5.407428e-002, -2.218275e-003, 4.680661e-002, 4.918857e-002, 1.733024e-002, -1.020618e-002, -3.074304e-002, -3.134829e-002, -3.009546e-002, -3.021378e-002, 2.817474e-002, 9.313520e-002, 2.927234e-002, -1.062084e-002, 5.239468e-002, -1.930797e-002, -1.792539e-002, -2.151989e-002, -3.192110e-002, -2.052675e-002, -5.339421e-004, 2.025488e-002, 3.549997e-002, 6.130405e-003, 6.999077e-003, 4.946950e-002, 4.089226e-002, -3.431528e-002, -5.819776e-002, -8.103997e-003, 6.627645e-002, 6.120532e-002, -7.405359e-004, -2.258602e-002, -4.912318e-003, 3.931804e-002, 6.443761e-002, 4.264413e-002, -2.575427e-002, -4.830289e-002, -2.367379e-002, -1.090474e-002, -1.033906e-002, -3.803322e-002, -4.284653e-002, 2.473571e-002, 2.973136e-002, 1.356655e-002, 8.827223e-003, -1.930148e-002, -2.435025e-002, 1.896215e-002, 3.541314e-002, -2.222657e-003, 7.544640e-004, 3.754353e-002, -1.795846e-004, -2.622157e-002, 7.035975e-003, 4.175039e-002, -3.705205e-003, -2.363104e-002, -3.335474e-002, -3.204986e-002, 9.513508e-003,

© ISO/IEC 2004 — All rights reserved


Copyright International Organization for Standardization
Provided by IHS under license with ISO
No reproduction or networking permitted without license from IHS
Not for Resale

4.431872e-002, 4.475738e-002, -1.083915e-003, -5.880322e-002, -5.790944e-002, -5.158260e-002, -3.017051e-002, -9.479629e-002, -2.374105e-002, 5.363285e-002, 5.203481e-002, 4.324477e-002, 8.671179e-003, -7.296132e-002, -9.918034e-002, -3.219227e-002, 3.253232e-002, 2.331865e-002, 1.531559e-002, 7.514611e-002, 6.700275e-002, 1.927721e-002, 2.438397e-002, 5.688364e-003, 1.082697e-002, 5.811989e-002, 4.366208e-002, -1.957690e-002, -1.307877e-003, 1.879358e-002, -5.373667e-003, -1.967457e-002, -4.034461e-002, -3.670760e-002, -2.517058e-002, -3.149056e-002, -4.269009e-002, -2.826539e-002, -3.145318e-002, -6.106957e-002, -2.882289e-002, 1.309340e-002, -3.070670e-003, 1.425078e-003, 1.382929e-002, 4.220994e-002, 2.267730e-002, -5.149251e-002, 4.521538e-002, 2.401861e-002, -2.542946e-002, 2.634862e-003, -3.108424e-002, -2.592654e-002, 5.820265e-002, 4.844801e-002, -9.470288e-003, 2.921890e-002, 5.036655e-002, -3.860055e-003, -2.540811e-002, -2.189131e-002, -1.497814e-003, 1.417763e-002, -1.071913e-002, 3.817786e-002, 2.365593e-002, -1.778497e-002, -3.634115e-002, 6.363100e-003, 3.432390e-002, 5.394834e-002, 5.551567e-002, 3.767785e-002, 3.035568e-002, -7.294324e-003, -8.793186e-002, -8.628207e-003, -3.184235e-002, -5.083208e-002, -9.115039e-003, -2.121737e-002, -8.005101e-002, -8.274595e-003, 1.386917e-002, -7.144936e-003, -8.464276e-003, -3.149179e-003, -1.712149e-002, -3.343376e-002, -3.005386e-002, -1.125006e-002, 1.186487e-002, -4.273536e-003, 6.655902e-002, 7.584483e-002, 3.727782e-002, 2.716160e-002, 3.518128e-002, 4.084295e-002, 3.345646e-002, 1.217504e-002, -1.048250e-002, -1.116380e-002, -3.145392e-002, -6.869990e-002, -2.074615e-003, -2.937017e-002, -4.096620e-002, 3.399558e-003, 9.986667e-003, -6.990373e-002, -2.775647e-002, 6.373281e-003, 2.962779e-003, -6.842755e-003, -8.838702e-003, -3.626088e-003, 1.281680e-002, 3.739411e-002, 5.566426e-002, 6.947184e-002, 3.179010e-002, 5.749653e-002, 7.619573e-002, 3.597418e-002, -2.900638e-004, -2.705634e-002, -4.429851e-002, -6.024245e-002, -6.143156e-002, -3.523988e-002, 4.902327e-003, -1.872181e-002, -5.614773e-003, 1.894988e-002, -6.370282e-003, -2.834526e-002, 1.736593e-002, 3.715780e-002, -1.902077e-002, -5.161424e-004, 3.552020e-002, 4.238418e-003, -2.012539e-002, -2.256625e-002, -1.878353e-002, -4.664614e-003, 4.021817e-002, 7.701304e-002, 7.834930e-002, 4.011316e-002, 1.793595e-002, 5.111630e-002, 1.532429e-002, -3.013696e-002, -5.999590e-002, -7.335997e-002, -7.094159e-002, -4.374572e-002, 9.068684e-003, 4.326783e-002, 1.802541e-003, 1.189746e-002, 3.969336e-002, 1.547019e-002, -2.655691e-002, 2.339747e-002, 4.280541e-002, 7.013734e-003, 3.491461e-002, 8.265332e-002, 5.255586e-002, 3.232821e-003, -2.421653e-002, -3.147974e-002, -2.193675e-002, 1.192954e-002, 5.135911e-002, 4.648065e-002, 1.638982e-002, -3.283908e-002, -1.316133e-003, -1.837155e-002, -3.004520e-002, -3.735182e-002, -2.101420e-002, 1.247011e-002, 6.021229e-002, 9.342856e-002, 5.002243e-002, -2.849089e-002, -1.169299e-002, 4.786014e-002, 2.712757e-002, -1.346119e-002, 1.236634e-002, 2.494029e-002, -3.291241e-003, -4.795737e-004, 8.825298e-002, 1.037646e-001, 6.548999e-002, 2.291518e-002, -1.775519e-002, -3.816666e-002, -2.530499e-002, -6.615647e-003, -1.201824e-002, -1.694857e-002, -6.341979e-002, -5.838517e-002, -6.795017e-002, -6.793711e-002, -4.312820e-002, 3.662238e-003, 4.830192e-002, 7.326649e-002, 5.573788e-002, -2.671917e-002, -8.174133e-002, -8.947534e-003, 4.576884e-002, 1.329734e-002, -2.830054e-002, -9.688759e-003, 1.223833e-002, -1.855963e-002, -3.590322e-002, 1.090084e-002, 5.001648e-002, 3.602552e-002, -1.068566e-003, -4.916700e-002, -9.204835e-002, -9.780043e-002, -7.311533e-002, -5.332443e-002, -3.586754e-002},
{6.802490e-003, 8.838951e-003, -2.460567e-002, -5.176447e-002, -5.146029e-002, -4.510519e-002, -4.416494e-002, -1.811992e-002, 4.922108e-003, 2.514272e-002, 4.066830e-002, 4.900340e-002, 4.154153e-002, 2.203465e-002, -3.801551e-003, -1.573068e-002, -4.376002e-003, 1.778597e-002, 2.367624e-002, 1.893253e-002, 9.199450e-003, 2.539342e-002, 2.902838e-002, 1.531681e-002, -1.016474e-002, 1.223870e-002, 4.611742e-002, 2.189816e-002, -3.821188e-002, 3.967863e-002, 1.775771e-002, -4.968521e-003, -4.161982e-004, -2.325817e-003, -2.617073e-002, -3.117003e-002, -9.866674e-003, 2.101700e-002, 4.819299e-002, 6.302281e-002, 6.687445e-002, 4.412517e-002, 1.266914e-002, -2.264329e-002, -3.274489e-002, -6.345852e-003, 2.530666e-002, 2.916708e-002, 1.669897e-002, -1.439924e-002, -1.308536e-002, 1.082801e-004, 1.392535e-002, 1.733911e-002, 7.206525e-004, 1.378701e-002, 1.952847e-002, -8.433719e-003, 2.652397e-002, 8.849862e-003, 2.367860e-002, 2.923023e-002, -1.384694e-003, -4.180050e-002, -5.574334e-002, -4.099460e-002, -1.037499e-002, 2.065727e-002, 3.843150e-002, 2.968762e-002, -4.699243e-003, -4.322817e-002, -8.156562e-002, -8.422891e-002, -4.264911e-002, -2.832605e-003, 1.529347e-002, 6.643089e-003, -3.538645e-002, -6.245547e-002, -5.701699e-002, -4.048937e-002, -1.467058e-002, 6.941383e-003, 6.760582e-003, -7.742791e-003, -2.880039e-002, 8.651208e-003, 1.499370e-003, 2.153506e-002, 1.174974e-002, -2.180165e-002, -4.958676e-002, -5.876819e-002, -5.341656e-002, -2.138563e-002, 1.457573e-002, 4.307337e-002, 3.896849e-002, 2.380436e-003, -3.941345e-002, -7.252564e-002, -7.005446e-002, -2.083823e-002, 2.990275e-002, 4.574044e-002, 3.081170e-002, -6.029724e-003, -5.092524e-002, -5.377502e-002, -3.549201e-002, -3.275692e-002, -1.698390e-002, 9.427757e-003, 5.689598e-003, -4.287907e-002, -1.596244e-002, -1.757627e-003, 9.731849e-003, -9.759614e-003, -2.367526e-002, -2.175946e-002, -2.948771e-002, -3.539639e-002, -1.085859e-002, 2.656505e-002, 5.871700e-002, 5.974390e-002, 2.734917e-002, -1.422886e-002, -3.827835e-002, -2.801799e-002, 1.158937e-002, 6.344621e-002, 7.886161e-002, 6.272010e-002, 1.936861e-002, -2.691202e-002, -2.309477e-002, 1.746915e-002, 2.036843e-002, -1.750645e-003, -3.380945e-003, 6.709827e-003, -


© ISO/IEC 2004 — All rights reserved
--`,,```,,,,````-`-`,,`,,`,`,,`---

Copyright International Organization for Standardization
Provided by IHS under license with ISO
No reproduction or networking permitted without license from IHS
Not for Resale

2.029605e-002, -2.308031e-002, -2.063409e-003, 6.800929e-003, 6.301347e-003, 4.641361e-003, 4.340824e-003, -1.067389e-002, -1.765817e-002, -1.959017e-003, 2.117145e-002, 5.119889e-002, 5.500555e-002, 3.969818e-002, 1.869881e-003, -1.517441e-002, -1.251256e-002, 1.059594e-002, 4.817326e-002, 6.495104e-002, 5.959295e-002, 2.764563e-002, -1.732535e-002, -3.476127e-002, 2.496043e-002, 6.814572e-002, 3.462961e-002, -1.505993e-002, -1.418146e-002, 3.205414e-003, 3.682647e-003, 1.727236e-002, 1.756280e-002, 3.801169e-002, 3.903634e-002, 2.884411e-002, -2.163860e-003, -1.488659e-002, -2.299498e-002, -1.128803e-002, 1.081498e-002, 2.117260e-002, 1.167863e-002, -8.945998e-004, -1.541436e-002, -2.681785e-002, -2.448103e-002, 7.721078e-004, 2.148538e-002, 2.861461e-002, 1.059522e-002, -1.939406e-002, -5.229876e-002, -2.046149e-002, 5.214259e-002, 5.582984e-002, -6.291076e-003, -2.613959e-002, -6.685799e-004, 2.308789e-002, 1.206954e-002, 1.624811e-002, 5.820051e-002, 6.699534e-002, 3.701469e-002, -5.007878e-003, -2.334101e-002, -4.061116e-002, -4.617418e-002, -2.571941e-002, -1.850379e-002, -1.504517e-002, -1.833938e-003, -1.034805e-002, -2.672816e-002, -4.106172e-002, -3.290378e-002, -7.800855e-003, 8.608955e-003, -3.948129e-004, -1.360409e-002, -3.996411e-002, -4.044240e-002, 6.173155e-003, 3.136545e-002, -5.801978e-003, -2.548854e-002, 8.824071e-003, 1.973093e-002, -1.948221e-002, 7.745506e-003, 6.002446e-002, 5.863908e-002, 2.939135e-002, 8.086232e-004, -9.846689e-003, -2.507721e-002, -4.471045e-002, -4.724027e-002, -3.870556e-002, -2.817932e-002, 9.327095e-003, 1.501078e-002, -4.764550e-003, -4.069713e-002, -3.837736e-002, -1.506197e-002, 1.290272e-002, 1.499235e-002, 5.080813e-003, -6.420768e-003, -1.954368e-002, -1.730472e-002, -1.932940e-002, -2.663804e-002, -3.249491e-002, 1.700014e-002, -6.026308e-003, -4.541551e-002, 2.351181e-003, 4.096962e-002, 2.678452e-002, 6.607038e-003, -2.420727e-004, 1.523219e-003, -2.318295e-003, -2.095639e-002, -3.999702e-002, -3.494191e-002, -2.253790e-002, 1.859039e-002, 3.465474e-002, 1.927783e-002, -1.950849e-002, -3.605477e-002, -1.793326e-002, 2.106398e-002, 4.751924e-002, 4.906915e-002, 4.394129e-002, 2.368480e-002, 6.651019e-003, -2.589261e-002, -5.756904e-002, -5.466152e-002, 1.342267e-002, -1.689826e-002, -5.855013e-002, -1.415744e-002, 2.177060e-004, -2.024773e-002, -2.155396e-002, -9.965212e-003, 1.300997e-002, 2.676657e-002, 1.264290e-002, -1.960935e-002, -3.252577e-002, -1.596819e-002, 1.643791e-002, 3.107618e-002, 2.093377e-002, -5.293903e-003, -3.070273e-002, -2.870270e-002, 1.254717e-002, 5.447728e-002, 7.583030e-002, 7.195167e-002, 5.504453e-002, 3.988361e-002, 1.529852e-002, -4.321106e-002, -6.007492e-002, 1.520073e-002, -9.922623e-003, -5.643651e-002, -2.901023e-002, -4.090676e-002, -6.948368e-002, -4.743174e-002, -1.125388e-002, 2.707758e-002, 5.545709e-002, 4.551707e-002, 1.304095e-002, -1.768432e-002, -1.798144e-002, -5.134739e-003, 8.500626e-003, 5.280819e-003, -9.863131e-003, -3.298305e-002, -3.241874e-002, 2.161707e-004, 3.259042e-002, 5.629436e-002, 5.187686e-002, 3.321985e-002, 3.542854e-002, 3.928236e-002, 1.569579e-003, -3.439110e-002, 3.765420e-002, 1.100487e-002, -3.494137e-002, -1.996865e-002, -5.290647e-002, -8.965989e-002, -6.590401e-002, -1.023249e-002, 4.498401e-002, 8.504200e-002, 8.186251e-002, 3.947386e-002, -8.008215e-004, -1.840705e-002, -2.071030e-002, -1.570696e-002, -5.834727e-003, -6.392537e-003, -1.842248e-002, -2.534974e-002, -9.770308e-003, -3.049735e-003, -4.460997e-003, -2.534514e-002, -4.569966e-002, -3.337519e-002, 4.372081e-003, 1.097931e-002, -1.659531e-002, 4.553436e-002, 4.666867e-002, 1.231261e-002, 2.511819e-002, -1.083927e-002, -4.881984e-002, -3.317895e-002, 1.495231e-002, 5.779216e-002, 8.979728e-002, 8.548703e-002, 5.365196e-002, 1.447001e-002, -8.409894e-003, -1.666521e-002, -1.291428e-002, -5.210016e-003, 5.948539e-003, 9.136476e-003, 1.080504e-002, 8.066769e-003, -1.232841e-002, -4.236518e-002, -8.075675e-002, -1.054622e-001, -8.817728e-002, -3.306783e-002, 1.500062e-002, 8.188824e-004, 5.068888e-002, 7.958819e-002, 4.346169e-002, 5.784393e-002, 5.519386e-002, 4.570643e-002, 2.580738e-002, 4.140878e-004, -2.070193e-002, -2.058842e-002, -7.371715e-003, 6.827009e-003, 1.078434e-002, -1.641561e-003, -1.537463e-002, -8.460989e-003, 3.110981e-003, 1.811255e-002, 2.196328e-002, 1.415170e-002, -1.497649e-002, -3.799773e-002, -4.246167e-002, -4.085956e-002, -3.656333e-002, -2.321948e-002, 4.400778e-003, 3.317948e-002, 2.573060e-002, 5.479283e-002, 5.879062e-002, 6.592093e-003, 3.816370e-002, 5.982715e-002, 3.871775e-002, -1.452653e-003, -3.933550e-002, -5.661995e-002, -5.474273e-002, -2.619868e-002, 4.980297e-003, 3.223675e-002, 1.696503e-002, -9.631027e-003, -8.358244e-003, 1.181821e-002, 2.344090e-002, 1.537667e-002, -1.421844e-002, -5.790105e-002, -7.757672e-002, -6.303650e-002, -2.553579e-002, 2.894380e-002, 8.044156e-002, 9.065464e-002, 5.582632e-002, 2.432674e-002, 4.450931e-002, -2.524808e-002, -3.954727e-002, 1.774558e-002, -5.973217e-003, -4.755294e-002, -4.593183e-002, -2.019568e-002, -6.746799e-003, -1.121553e-004, 2.691322e-002, 5.755510e-002, 7.381090e-002, 4.280181e-002, -3.848955e-003, -1.584483e-002, 1.957419e-002, 6.071817e-002, 6.461850e-002, 5.161549e-002, 1.641089e-002, -1.856302e-002, -3.745194e-002, -6.352401e-002, -5.788259e-002, -9.690677e-003, 4.196698e-002, 3.141818e-002, -2.173596e-002, -1.066770e-002, -5.606818e-002, -1.712354e-002, 7.192685e-003, -3.771331e-002, -4.870095e-002, -2.888379e-002, 4.412925e-003, 2.588066e-002, 3.209622e-002, 3.277946e-002, 3.432462e-002, 2.400128e-002, 2.062164e-002, -4.602573e-002, -7.172074e-002, -1.593909e-002, 4.366949e-002, 6.239375e-002, 6.541295e-002, 6.112789e-002, 3.475438e-002, 1.377120e-002, -1.278591e-002, -3.289804e-002, -4.583308e-002, -3.921186e-002, -4.702329e-002, -7.205272e-002, -5.725548e-002, -4.838492e-003, 1.942054e-002, 1.746711e-002, 7.153469e-003, 1.586023e-002, 5.023298e-002,

© ISO/IEC 2004 — All rights reserved


Copyright International Organization for Standardization
Provided by IHS under license with ISO
No reproduction or networking permitted without license from IHS
Not for Resale

5.453800e-002, 1.209818e-002, -8.600302e-004, 2.059600e-002, -1.417045e-002, -5.002799e-002, -1.283221e-002, -3.329716e-002, -5.466000e-002, -3.023961e-002, -1.697608e-002, -1.958695e-002, 5.152313e-003, -1.417623e-003, -2.022356e-002, -7.714619e-003, -3.087302e-003, -6.046021e-003, -1.208684e-002, -3.965170e-002, -7.135380e-002, -7.995881e-002, -5.592646e-002, 2.267535e-002, 4.132099e-002, 7.145980e-002, 5.537508e-002, -1.444541e-002, 6.836900e-002, 8.293130e-002, -2.150251e-002, -5.191984e-002, 6.685497e-002, 1.994177e-002, -4.401743e-002, 1.403274e-002, 5.513554e-002, 6.412971e-002, 5.997620e-002, -1.701271e-002, -8.390257e-002, -3.681694e-002, -3.205118e-002, -4.942694e-002, 4.907090e-003, -2.328042e-003, -5.968681e-002, -3.057652e-002, 3.584215e-002, 9.956124e-003, 7.885523e-003, 2.889232e-002, 1.784752e-002, 2.588747e-002, 4.005005e-002, -2.266339e-002, -6.544452e-002, 8.119595e-002, 1.196060e-001, -1.375008e-002, -4.132631e-002, 6.752930e-002, 7.523251e-002, 1.066203e-003, 3.280896e-002, 5.236050e-002, 5.373477e-002, 5.444896e-002, 3.086675e-002, -6.855987e-002, -1.769172e-002, 3.693317e-003, -8.247109e-002, -2.839438e-002, 1.659875e-002, -4.737768e-002, -3.006319e-002, 4.622737e-002, 6.934425e-002, 5.485700e-002, 5.319211e-002, -1.077326e-002, -2.571311e-002, -2.907955e-002, -3.462872e-002, -3.995378e-003, 3.316884e-002, 2.384790e-002, -1.287853e-002, -6.441527e-003, 1.584009e-002, 3.493512e-002, 2.646349e-003, -3.724436e-003, 3.186297e-002, 1.692807e-002, 2.298503e-003, 5.320945e-002, -3.255496e-003, -2.406783e-002, -2.164503e-002, -4.177971e-002, -4.106876e-002, -8.416897e-003, -2.158650e-002, -4.982699e-002, -5.271969e-002, -2.837412e-002, -2.185911e-002, -2.099720e-002, 5.524459e-004, -1.129979e-002, -5.569720e-003, 5.337889e-003, 3.368234e-002, 1.995039e-002, -9.238791e-003, -3.530971e-002, -2.786010e-002, 1.888979e-002, 4.273446e-002, -1.066318e-002, -4.956979e-004, 4.467212e-002, 4.841733e-003, -2.472223e-002, 1.610369e-002, 4.108047e-002, -1.777346e-002, -3.453827e-002, -4.078747e-002, -3.595142e-002, -1.697934e-002, -8.848702e-003, -1.995280e-002, -2.840113e-002, -3.727089e-002, -4.576563e-002, -4.296304e-002, 9.284429e-003, -2.502464e-003, -3.609961e-003, 2.080989e-002, 3.839339e-002, 2.288085e-002, -7.664128e-003, -2.426520e-002, -6.570766e-003, 4.224849e-002, 3.707402e-002, -3.571420e-002, 2.096215e-002, 4.497992e-002, -2.001989e-002, -3.345144e-002, -1.932738e-002, 6.715157e-002, 2.538157e-002, 1.287082e-003, 5.953058e-003, 2.021841e-002, 3.568252e-002, 4.948468e-002, 5.651977e-002, 4.095982e-002, 3.990178e-003, -3.678144e-002, -1.126425e-002, 4.925002e-003, -9.081574e-003, -2.232553e-002, -1.920963e-002, 1.623835e-003, 2.166641e-003, -1.424857e-002, -1.558243e-002, 9.983325e-003, 3.966737e-002, -1.748132e-002, -5.098062e-002, 2.529815e-002, 1.278625e-002, -4.054075e-002, -3.511805e-002, -1.437210e-002, 4.296219e-002, 6.504546e-002, 4.015820e-002, 3.126022e-002, 4.694390e-002, 6.810805e-002, 7.063041e-002, 6.344108e-002, 4.560906e-002, 4.951793e-003, -1.732218e-002, 3.262754e-002, 4.844580e-003, -1.116045e-002, -3.611576e-002, -4.136990e-002, -4.036350e-002, -3.344488e-002, -2.841707e-002, -1.471012e-002, 1.491133e-002, -1.224797e-002, -8.459990e-002, -4.853252e-002, 2.245758e-002, -3.553132e-003, -4.937010e-002, -4.066353e-002, -1.027454e-002, 8.388122e-003, 2.946162e-002, 2.451071e-002, 2.122020e-002, 2.536519e-002, 3.760072e-002, 4.046466e-002, 3.035732e-002, 1.079250e-002, -2.970379e-003, 9.269795e-003, 6.383712e-002, 3.858424e-003, -1.216525e-002, -4.017422e-002, -5.618958e-002, -5.347353e-002, -4.812377e-002, -3.346223e-002, -1.356070e-002, -2.408934e-002, -7.817664e-002, -9.836318e-002, -9.629958e-003, 3.894117e-002, -1.024941e-002, -5.778160e-002, -5.197321e-002, -1.312367e-002, -9.764540e-003, -5.060235e-003, -2.402111e-003, -1.588497e-002, -2.185933e-002, -2.107323e-002, -1.796505e-002, -1.295405e-002, -1.260859e-002, -5.057111e-003, 2.317951e-002, 7.777801e-002},
{8.504722e-002, 5.068301e-002, 8.042435e-003, -3.443828e-002, -3.434814e-002, -2.247149e-002, -7.277655e-003, 9.636917e-003, 1.490951e-002, 1.368180e-002, 7.466660e-003, 4.344910e-003, -4.930057e-005, -5.558700e-003, -2.231782e-002, -4.142736e-002, -4.379553e-002, -3.402946e-002, -2.387500e-002, -1.347196e-002, -1.021099e-003, 1.593133e-002, 4.918474e-002, 4.881218e-002, -2.821486e-003, -2.781360e-002, 1.140775e-002, 6.304856e-002, 3.527343e-002, -1.380498e-003, -1.662789e-002, -2.788674e-002, -3.506408e-002, -4.480586e-002, -4.176193e-002, -3.025968e-002, 2.656464e-003, 1.379242e-002, 3.785527e-004, -1.831402e-002, -2.339470e-002, -2.368154e-002, -2.460563e-002, -3.506390e-002, -4.631299e-002, -3.294839e-002, -1.576368e-002, -1.686736e-003, 6.449359e-003, 3.271200e-003, -1.003928e-002, -1.053774e-002, 1.457956e-004, -1.357780e-003, -3.917891e-002, -6.000428e-002, -2.736743e-002, 1.377739e-003, -2.854505e-002, 5.161999e-003, 2.346642e-002, 4.160113e-003, -3.966147e-002, -3.302549e-002, 9.392802e-003, 4.216735e-002, 3.169342e-002, 5.223779e-003, -8.604850e-003, -8.199591e-003, 1.439258e-002, 3.227868e-002, 2.852491e-002, 2.496236e-002, 2.799472e-002, 3.105151e-002, 2.741046e-002, 2.838015e-002, 2.196456e-002, -8.941215e-005, -2.054854e-002, -4.693829e-002, -4.094115e-002, -2.000994e-002, -1.649828e-002, -3.066726e-002, -2.978103e-002, -1.265696e-002, 5.400221e-002, 6.762435e-002, 7.723263e-003, -4.154410e-002, -2.033089e-002, 2.671994e-002, 3.518505e-002, 7.960492e-003, -2.500671e-002, -2.117060e-002, 6.866362e-003, 5.243540e-002, 7.851263e-002, 7.190234e-002, 5.162233e-002, 2.939550e-002, 1.326259e-002, 1.653270e-003, -6.015042e-003, -1.705391e-002, -1.405167e-002, -9.313808e-003, -1.403396e-002, -4.869610e-002, -4.243178e-002, 7.314586e-003, 2.589074e-002, -2.247474e-002, 5.089221e-003, 5.774754e-002, 4.893753e-002, -2.164504e-003, -2.340519e-002, 3.761520e-003, 3.108447e-002, 4.950237e-003, -3.286342e-002, -6.333384e-002, -5.750364e-002, -1.295665e-002,


© ISO/IEC 2004 — All rights reserved

Copyright International Organization for Standardization
Provided by IHS under license with ISO
No reproduction or networking permitted without license from IHS
Not for Resale

4.049355e-002, 6.308447e-002, 4.784840e-002, 3.014635e-002, 5.580795e-003, -2.035162e-003, -9.911954e-003, -2.610561e-002, -4.551539e-002, -4.317395e-002, -1.594243e-002, 1.269540e-002, 1.212295e-002, -2.253020e-002, -2.308787e-002, 4.640551e-002, 3.317063e-002, -8.861209e-003, 4.360672e-002, 2.437745e-002, 4.886178e-003, -2.112724e-003, 8.342201e-003, -6.800940e-004, -2.335410e-002, -3.149677e-002, -6.238519e-002, -5.807369e-002, -2.103663e-002, 6.405096e-003, 1.487741e-002, -6.881628e-005, -2.351495e-003, -6.994749e-003, 7.775734e-003, 3.232469e-002, 2.497279e-002, -9.736947e-003, -4.294805e-002, -3.865185e-002, 1.150345e-002, 5.894064e-002, 5.634873e-002, 2.484016e-003, 2.325567e-002, 6.086301e-002, -3.661342e-002, 1.928927e-002, 3.406451e-002, 1.776469e-002, -7.694882e-003, -1.692446e-002, -1.242683e-002, -2.656318e-003, 3.465821e-003, -2.039146e-002, -2.081671e-002, -1.109934e-002, -1.437644e-002, -1.786004e-002, -3.254321e-002, -2.927636e-002, -1.570707e-002, 1.287863e-002, 5.701190e-002, 7.788005e-002, 5.812732e-002, 1.132088e-003, -3.613745e-002, -2.152176e-002, 5.022178e-002, 9.934060e-002, 4.363382e-002, 3.292144e-003, 3.547765e-002, -4.029612e-002, 2.076921e-002, 4.381744e-002, 8.374661e-003, -2.801734e-002, -1.216197e-002, 1.205935e-002, 2.328815e-002, 3.098684e-002, 1.143183e-002, -7.120120e-004, -2.957415e-003, -1.724820e-002, -2.899927e-002, -4.115775e-002, -4.545098e-002, -3.602679e-002, -4.454196e-004, 4.975400e-002, 8.904605e-002, 8.763438e-002, 4.261083e-002, -2.505084e-002, -5.496611e-002, -3.536489e-003, 7.319307e-002, 5.018056e-002, -1.064489e-002, 6.093565e-003, -2.602493e-002, 2.753753e-002, 1.962020e-002, -1.273193e-002, -1.248839e-002, 2.189309e-002, 3.982866e-002, 4.308028e-002, 4.107457e-002, 2.033320e-002, -3.509028e-003, -1.198937e-002, -2.570027e-002, -3.560120e-002, -3.907702e-002, -4.783987e-002, -5.790429e-002, -3.808411e-002, 7.883782e-003, 5.943729e-002, 7.246607e-002, 4.211962e-002, -1.919237e-002, -6.540626e-002, -4.996250e-002, 1.738460e-002, 2.813098e-002, -2.875060e-002, -2.008027e-002, -2.356123e-002, 4.249268e-003, -1.174666e-002, -1.079770e-002, 1.923920e-002, 4.260308e-002, 4.050768e-002, 3.076091e-002, 2.298989e-002, 2.236081e-003, -1.664513e-002, -2.608477e-002, -2.791415e-002, -2.183093e-002, -2.377682e-002, -3.305047e-002, -5.171361e-002, -4.879490e-002, -2.349695e-002, 1.727774e-002, 3.876067e-002, 2.761386e-002, -2.575181e-002, -6.210797e-002, -6.062072e-002, -1.438246e-002, -2.429886e-003, -5.134658e-002, -3.940220e-002, -3.448460e-002, -3.342072e-002, -1.561818e-002, 1.087793e-002, 3.374629e-002, 2.799900e-002, 9.203414e-003, -8.775287e-003, -1.235278e-002, -1.812673e-002, -2.537729e-002, -2.626180e-002, -1.616682e-002, -4.240655e-004, 5.837550e-003, -4.790776e-003, -2.091836e-002, -2.284958e-002, -1.660892e-002, 6.199286e-003, 2.383302e-002, 2.058527e-002, -1.471606e-002, -4.740942e-002, -5.062127e-002, -2.021425e-002, -8.846162e-003, -5.387946e-002, -2.921220e-002, -4.632942e-002, -3.891280e-002, 1.266014e-002, 4.118417e-002, 3.297912e-002, 1.909229e-003, -2.765347e-002, -3.535414e-002, -1.725475e-002, -3.387045e-003, 8.249911e-004, 4.759456e-003, 1.344023e-002, 2.444983e-002, 3.840410e-002, 3.268355e-002, 1.951124e-002, 1.044496e-002, 7.580983e-003, 2.303026e-002, 3.281408e-002, 2.988040e-002, 1.214351e-002, -8.041447e-003, -1.180885e-002, 7.030811e-005, -1.029964e-002, -3.594412e-002, -6.897452e-003, -3.886750e-002, -1.532838e-002, 3.214283e-002, 4.714417e-002, 1.223132e-002, -3.212848e-002, -5.788084e-002, -4.510202e-002, -5.160211e-003, 2.033309e-002, 2.653296e-002, 2.523302e-002, 2.687497e-002, 3.505295e-002, 4.617678e-002, 4.368848e-002, 2.275791e-002, 6.874985e-003, 4.499158e-004, 6.147249e-003, 1.102645e-002, 1.285537e-002, 1.248045e-002, 3.306705e-003, 1.051130e-002, 2.414074e-002, -1.493410e-003, -1.614081e-002, 1.634167e-002, -1.302367e-002, -5.944050e-004, 2.768829e-002, 2.063727e-002, -2.424063e-002, -4.896536e-002, -4.020930e-002, -1.312982e-002, 2.081608e-002, 3.062412e-002, 1.873518e-002, 5.302289e-004, -6.754573e-003, 4.545718e-003, 1.836400e-002, 6.787884e-003, -2.061422e-002, -2.809280e-002, -3.250907e-002, -1.658111e-002, -2.752467e-003, 3.109987e-003, 1.322475e-003, -7.398975e-003, -1.057064e-002, 1.510511e-002, 6.940713e-004, -2.142650e-002, 2.184702e-002, 2.135432e-002, 1.715736e-002, 1.598089e-002, -9.910311e-003, -4.467354e-002, -3.980486e-002, -1.765095e-002, 9.126534e-003, 3.490395e-002, 3.443892e-002, -8.105331e-003, -4.701373e-002, -5.647894e-002, -4.071512e-002, -2.110591e-002, -3.193596e-002, -4.204363e-002, -1.730959e-002, 9.698036e-003, 3.924476e-002, 5.744840e-002, 5.506875e-002, 3.128856e-002, 1.094431e-002, -1.065017e-002, 6.785628e-003, -1.089704e-002, -3.521560e-002, 1.041845e-002, 6.205625e-002, 4.616723e-002, 1.413281e-002, -1.714630e-002, -4.392654e-002, -6.885694e-002, -6.849286e-002, -2.532696e-002, 2.125840e-002, 4.015326e-002, 3.300203e-003, -5.249199e-002, -5.749083e-002, -2.547955e-002, 7.419369e-003, -6.954920e-003, -9.853978e-003, 2.967355e-002, 4.605267e-002, 3.986116e-002, 2.993805e-002, 5.364486e-003, -6.040936e-003, -8.683332e-003, -2.424136e-002, 7.678698e-003, 3.236332e-002, -1.316548e-002, -5.127244e-003, 8.504279e-002, 4.082949e-002, 3.249919e-002, 3.226347e-002, 2.083028e-002, -7.208132e-004, -1.361118e-002, 1.110964e-002, 6.116758e-002, 9.500420e-002, 6.368255e-002, -1.273009e-002, -1.697793e-002, 3.681202e-002, 8.132796e-002, 4.555294e-002, -9.659487e-003, -1.184143e-002, -8.538348e-003, 1.002594e-002, 2.059517e-002, 1.951478e-002, 9.894576e-003, -5.636038e-003, -2.667477e-002, -1.575371e-002, 4.614205e-002, 3.522359e-002, 6.895693e-003, 6.004991e-002, 1.201206e-002, 9.343053e-003, 1.488667e-002, 2.454269e-002, 3.625221e-003, -3.111120e-002, -3.936316e-002, -1.657850e-002, 1.437116e-002, 1.296023e-002, -6.801129e-002, -7.128746e-002, 3.089792e-002, 1.031509e-001, 3.208804e-002, -7.235356e-002, -9.056919e-002, -7.027715e-002, -

© ISO/IEC 2004 — All rights reserved


Copyright International Organization for Standardization
Provided by IHS under license with ISO
No reproduction or networking permitted without license from IHS
Not for Resale

4.576156e-002, -4.928455e-002, -6.459243e-002, -6.136061e-002, -5.998626e-002, -7.492647e-002, -7.340201e-002, -4.152258e-003, 4.571281e-002, 3.545876e-002, 1.737651e-002, -1.066248e-002, -6.887193e-003, -4.687056e-004, 3.488432e-002, 8.991404e-002, 7.273078e-002, 2.578562e-002, 1.246745e-002, 2.686950e-002, 1.587685e-002, -5.388450e-002, -8.388700e-002, 2.492253e-002, 8.551942e-002, 4.326025e-003, -5.278166e-002, -1.842180e-002, 1.143721e-002, -6.106370e-003, -2.522319e-002, -5.005024e-002, -4.223644e-002, -3.022397e-002, -3.078340e-002, -2.768374e-002, -1.232602e-002, 3.761281e-002, 5.745765e-002, -2.439143e-002, -1.914322e-002, -1.267328e-002, -5.334418e-002, -9.183918e-002, 1.051565e-002, 5.414224e-002, -5.762801e-003, -2.556239e-002, 2.168390e-002, 7.530076e-002, 5.741341e-002, -1.644915e-002, 6.077384e-003, 8.882977e-003, -4.109053e-002, 1.090071e-002, 9.056042e-002, 5.371089e-002, -3.628745e-002, 1.663424e-002, -1.027060e-002, 4.840543e-003, -5.240640e-002, -3.784202e-002, 2.414665e-002, 3.122605e-002, 1.022284e-002, 3.785414e-002, 2.001218e-002, 5.589975e-002, 6.520275e-002, 4.493795e-002, 1.834043e-002, -5.868999e-002, -6.099012e-002, -4.195686e-002, -1.497287e-002, -7.216549e-003, 5.577248e-002, 7.913819e-002, -2.330194e-002, -5.215527e-002, -6.538666e-002, -8.709834e-002, -2.508175e-002, 1.005444e-001, 5.353586e-002, -2.257183e-003, 3.253346e-002, -7.995913e-003, -1.705013e-002, -1.483258e-003, 6.593358e-002, 7.719716e-002, 4.967642e-002, -2.501587e-003, 4.716225e-003, 1.291750e-002, 3.935003e-002, -3.539163e-003, -1.403538e-002, 3.008187e-002, 6.923624e-002, 4.668087e-002, 3.093159e-002, -5.928591e-003, -4.921905e-002, -5.910220e-003, 3.059725e-002, -4.706546e-002, -3.962304e-002, -3.359203e-002, -7.842516e-002, -7.298705e-002, 2.037213e-002, -3.044664e-002, -4.865381e-002, -3.679238e-003, 1.686997e-002, 2.879901e-002, 4.319350e-002, 2.811525e-002, 1.326062e-002, 8.850627e-003, -1.322843e-002, -1.163122e-002, -2.595344e-002, -2.274193e-002, -9.319709e-002, -1.070347e-001, -4.347085e-002, 3.261987e-002, 4.605822e-002, 3.125002e-002, -1.028248e-002, -2.214353e-002, 2.773781e-002, 3.406908e-002, -3.836362e-002, -3.006880e-003, 1.100071e-003, -3.352138e-002, -8.001989e-002, 1.418837e-002, -3.808989e-002, -6.350994e-002, -3.741190e-002, 9.695112e-005, 1.877433e-002, -6.628561e-003, -6.002574e-002, -7.464637e-002, -5.579001e-002, -4.777245e-002, -3.110325e-002, -4.632495e-002, -3.415758e-002, -9.651291e-002, -1.118434e-001, -5.072434e-002, 1.466953e-002, 3.219919e-002, 1.156291e-002, -9.593762e-003, 1.261053e-002, 5.998838e-002, 1.341667e-002, -1.711299e-002, 1.263768e-002, 7.699947e-003, 1.835181e-003, -3.002126e-002, 8.721876e-003, 3.372825e-002, -3.233594e-002, -2.834630e-002, -3.729306e-003, 1.685333e-002, -3.557023e-003, -5.336607e-002, -7.426290e-002, -5.952467e-002, -4.576745e-002, -4.794073e-002, -4.869734e-002, -1.121537e-002, -5.095290e-002, -6.994314e-002, -3.949183e-002, -1.013783e-002, -1.022683e-002, -1.593176e-002, -2.179968e-003, 4.294283e-002, 4.848654e-002, -9.566751e-003, -1.993951e-003, 9.929351e-003, -5.880926e-003, 9.399707e-003, 3.117018e-002, 1.202546e-002, 5.236584e-002, 3.436793e-002, 2.871736e-003, 1.514933e-003, 1.091909e-002, -3.075576e-003, -2.593090e-002, -2.252476e-002, -6.255102e-003, -3.389512e-002, -4.770534e-002, -5.843013e-002, 1.222357e-002, 1.473797e-002, 9.116304e-003, 1.537720e-002, 1.578851e-002, 1.347483e-003, -5.479821e-003, 9.207758e-003, 3.266421e-002, 8.598375e-003, -2.872127e-003, 1.177898e-002, 2.412047e-002, -2.179800e-003, 1.572146e-003, 6.077837e-002, 4.846192e-002, 3.351222e-002, 2.545424e-002, 2.381339e-002, 2.667974e-002, 3.371170e-002, 3.486781e-002, 3.541303e-002, 4.096279e-002, 3.637675e-002, -1.817005e-004, -3.243467e-002, -6.267440e-002, -4.529623e-003, 3.853890e-002, 4.850120e-002, 4.307886e-002, 2.632094e-002, -3.113675e-003, -2.539395e-002, -1.938182e-002, -4.628808e-003, 3.182826e-003, 3.044541e-002, 4.893930e-002, 7.202694e-002, 2.488961e-002, 5.257511e-003, 6.315726e-002, 7.930951e-002, 4.972450e-002, 1.786719e-002, 1.522798e-003, 3.416119e-003, 1.667621e-002, 3.254646e-002, 5.175668e-002, 6.645755e-002, 5.817646e-002, 1.972796e-002, -1.996070e-002}
};

PCLDA basis matrix $\Psi_2^c$ [40][504]={
{8.877930e-002, 4.560083e-002, 4.612952e-002, 4.754830e-002, 1.183025e-001, 1.639693e-001, 1.616543e-001, 1.419871e-001, 1.201235e-001, 1.026544e-001, 7.732612e-002, 4.848940e-002, 2.255785e-002, 1.724092e-002, 4.642915e-002, 6.701892e-002, 8.694637e-002, 1.029922e-001, 9.100599e-002, 5.707824e-002, 3.866838e-002, 4.793254e-002, 7.400743e-002, 9.615966e-002, 3.094865e-002, 2.720165e-003, 2.081240e-002, 6.210660e-003, 5.699388e-002, 4.735608e-002, 1.127407e-003, -3.376034e-002, -4.425887e-002, -5.222143e-002, -5.765223e-002, -6.081124e-002, -6.495654e-002, -4.773982e-002, -1.465648e-002, 1.855854e-002, 3.993921e-002, 5.694297e-002, 4.635915e-002, 8.103294e-004, -2.963797e-002, -2.796217e-002, -5.350601e-003, 1.878996e-002, -2.705592e-002, -2.177834e-002, 1.477120e-003, -4.144067e-002, -1.130871e-002, -6.492606e-004, -1.099607e-002, 1.250676e-002, 3.500709e-002, 5.716574e-002, 6.683974e-002, 5.711794e-002, 3.278459e-002, 7.268971e-003, -1.349769e-002, -9.717926e-003, 7.088580e-003, 2.157182e-002, 7.340171e-003, -3.198703e-002, -3.366058e-002, -2.568487e-003, 2.704082e-002, 2.569581e-002, -5.703344e-002, -1.148138e-002, -6.299699e-003, -5.470680e-002, 6.727496e-003, 1.493970e-002, -2.893080e-003, 1.413084e-002, 2.261206e-002, 8.952635e-004, -2.004030e-002, -3.031860e-002, -1.202492e-002, 6.122440e-003, -1.082195e-002, -2.829016e-002, -


© ISO/IEC 2004 — All rights reserved

Copyright International Organization for Standardization
Provided by IHS under license with ISO
No reproduction or networking permitted without license from IHS
Not for Resale

2.267970e-002, 6.172302e-003, 3.006934e-003, -1.394171e-002, 8.736255e-003, 6.353599e-003, -2.561632e-002, -5.106444e-002, -5.040246e-002, 7.103688e-003, 1.922896e-004, -1.161567e-002, 3.103747e-002, -1.540116e-002, -1.961787e-002, 1.430467e-002, 2.485202e-002, 2.267256e-002, -6.495323e-003, -3.662362e-002, -4.098555e-002, -2.350030e-002, -1.986639e-002, -3.588282e-002, -3.416820e-002, -3.162145e-003, 1.710465e-002, 1.809661e-003, 8.478067e-003, 1.266618e-002, 1.597950e-002, 1.352115e-002, -2.507340e-002, 5.209578e-003, 3.594083e-003, 8.595742e-003, -1.378288e-002, -5.055370e-002, -1.034588e-002, 1.919366e-002, 1.760965e-002, -8.109306e-003, -3.315532e-002, -3.597621e-002, -3.350702e-002, -2.118509e-002, -2.083396e-003, -5.636917e-003, -3.132237e-002, -1.769808e-002, 1.677973e-002, -2.526215e-002, -5.469011e-002, -1.048432e-002, 8.643682e-003, -1.808510e-002, -2.438502e-003, -2.321294e-002, -2.183001e-002, -1.179978e-002, -5.639339e-002, -6.227188e-002, -2.646577e-002, 3.464888e-002, 2.926207e-002, -3.244096e-002, -2.657457e-002, -1.552081e-002, -4.141366e-002, -3.949838e-002, -2.912245e-002, 8.427611e-003, -3.390663e-002, -3.339187e-002, 1.864405e-002, -4.428253e-002, -5.973180e-002, -6.726544e-003, -4.490257e-002, -1.391697e-001, 3.464383e-002, 7.528042e-004, 2.015400e-002, 1.995636e-002, 2.315141e-003, 1.385899e-002, 1.960014e-002, 1.018232e-001, 8.951922e-002, -9.094800e-002, 3.249796e-002, 1.298068e-001, 1.135984e-002, -3.342528e-002, -4.699756e-002, 4.957754e-002, -1.782810e-002, -1.048791e-002, 5.545643e-002, -1.787194e-002, -1.211407e-002, 1.235553e-002, -2.938807e-002, -9.857812e-002, 2.775177e-002, 4.945450e-003, 4.424508e-002, 4.256640e-002, 5.567990e-002, 2.994751e-002, -6.958026e-002, -4.730304e-002, 7.221213e-002, -6.339679e-002, 3.606319e-002, 6.211102e-002, -4.451943e-003, -3.349754e-002, -5.555774e-002, 3.894832e-002, -2.437780e-002, -4.250850e-002, 2.602571e-002, -1.094535e-002, 8.784779e-005, -4.193990e-002, -1.132415e-001, -2.806041e-002, -1.978953e-002, -2.883357e-002, -1.678788e-002, -3.962996e-002, -2.095500e-002, -3.777789e-002, -2.806504e-002, 4.262104e-002, 6.665261e-002, 2.168786e-002, -1.453216e-002, -4.847173e-002, -2.040825e-002, 2.101334e-002, -3.485992e-002, 5.047638e-002, -2.802596e-003, -2.671931e-002, 3.270769e-002, 4.788462e-002, 8.592521e-003, -5.030158e-002, -1.241876e-001, -1.228749e-001, -1.318188e-002, -1.321686e-002, -1.943256e-002, -5.566528e-002, -4.524209e-002, -1.798177e-002, 1.096508e-002, 3.690216e-002, -3.179238e-003, -7.114332e-002, -1.076678e-001, -9.032978e-002, 2.538503e-003, 3.255550e-002, -1.537936e-002, 7.454397e-002, 4.039012e-002, 2.495673e-002, 6.113463e-002, 7.916118e-002, 4.093403e-002, -2.127750e-002, -1.231453e-001, -1.607401e-001, 5.291323e-003, 1.710067e-002, 5.494053e-003, -2.165644e-002, -1.682476e-002, 1.249150e-002, 1.569952e-002, -2.244431e-003, -5.301698e-002, -9.837008e-002, -9.325876e-002, -3.280440e-002, 4.188173e-002, 1.805541e-002, 2.398349e-002, 7.672675e-002, 5.878604e-002, 3.692287e-002, 6.174838e-002, 7.166090e-002, 4.009269e-002, 4.371635e-002, -1.447791e-002, -8.464544e-002, -6.132158e-004, 1.943326e-002, 5.982687e-003, 2.401554e-002, 1.988084e-002, 2.341793e-002, 6.595073e-003, -1.299938e-002, -4.415612e-002, -5.863793e-002, -3.514451e-002, 7.848157e-003, 3.018707e-002, 1.174113e-002, 3.075645e-002, 2.898791e-002, 2.167239e-002, -2.508978e-003, 2.125926e-002, 3.392541e-002, -3.473718e-003, 2.920188e-002, 6.806981e-002, 2.186054e-002, -2.026137e-002, 1.961638e-003, -1.034874e-002, 1.962594e-002, 5.472621e-002, 4.755419e-002, 5.444487e-005, -2.609092e-002, -4.214840e-002, -3.952508e-002, -8.046893e-003, 1.467362e-002, 2.253206e-002, 2.806351e-002, -2.107555e-002, -3.935534e-002, -4.262957e-002, -6.752012e-002, -5.061997e-002, -8.469850e-003, -2.726687e-002, -6.228593e-002, 3.034263e-002, 7.577722e-002, -1.773701e-002, -1.852615e-003, -1.642212e-002, 9.054329e-003, 2.671188e-002, 3.796694e-002, 1.212506e-004, -1.117656e-002, -6.280485e-003, -1.972459e-003, -2.835526e-003, 2.075573e-003, 4.048721e-002, 2.057134e-002, -6.889090e-002, -7.150665e-002, -7.593990e-002, -9.073907e-002, -5.793092e-002, -1.838419e-002, -8.393766e-003, -5.340283e-002, -3.045074e-002, 2.590063e-002, 1.085322e-002, -3.260221e-003, -1.062562e-002, 1.455680e-002, 1.192681e-002, -7.601621e-005, -3.097227e-002, -5.688833e-002, -5.814001e-002, -5.513868e-002, -4.230810e-002, -7.579338e-003, 3.848979e-002, 1.110471e-002, -3.157971e-002, -1.693120e-002, -5.817114e-002, -6.945998e-002, -2.944872e-002, 4.244707e-003, 2.188248e-002, -2.018711e-002, 2.125321e-002, 4.155773e-002, 4.163845e-002, 1.625847e-002, -1.036571e-002, 1.897258e-002, 1.105854e-002, 1.940893e-004, -1.294977e-002, -3.972374e-002, -4.208475e-002, -2.837239e-002, -7.949751e-003, 9.779742e-004, 4.405004e-003, -2.051115e-002, -3.098460e-002, -1.228473e-002, -5.002613e-002, -8.739105e-002, -1.142612e-001, -1.102610e-001, -2.548931e-002, -3.589647e-002, 2.793545e-002, 8.671574e-002, 4.896585e-002, 2.976923e-002, 1.703659e-003, 2.085638e-002, -1.905580e-003, -2.997013e-003, 5.150896e-003, -9.961102e-003, -1.811943e-002, -2.427089e-003, -4.089402e-003, -1.458249e-002, -7.076373e-003, -1.013911e-002, -4.176075e-002, -6.155762e-002, -4.289477e-002, -3.126320e-002, -8.081502e-002, -8.387646e-002, 6.608737e-003, -2.608790e-002, -3.986061e-003, 6.091127e-002, 2.191253e-002, 3.025963e-003, 8.146022e-003, 2.317832e-002, -1.871580e-002, -2.699327e-002, -7.246808e-004, 3.752719e-003, -8.098502e-004, 9.544964e-003, -4.527371e-003, -1.879370e-002, -5.709915e-004, 1.631634e-003, -6.234598e-002, -7.262496e-002, -3.778750e-002, -1.635419e-002, -1.730792e-002, -4.767099e-002, -6.201466e-002, -6.161723e-002, -1.643456e-002, 2.835977e-002, 2.221970e-002, -4.134392e-002, -7.437121e-003, 2.567369e-002, -1.963267e-002, -4.462086e-002, -1.381054e-002, 1.482153e-002, 1.865139e-002, 2.475316e-002, 1.466788e-002, -1.923878e-002, -2.998713e-002, -1.626832e-002, 2.429670e-002, 5.024133e-002,

© ISO/IEC 2004 — All rights reserved


Copyright International Organization for Standardization
Provided by IHS under license with ISO
No reproduction or networking permitted without license from IHS
Not for Resale

1.587637e-003, -5.447760e-002, 3.019571e-003, 3.424936e-002, -3.566788e-002, -6.661230e-002, -3.023166e-003, 3.550639e-002, 5.836981e-002, -3.894742e-002, -2.633940e-002, 2.856725e-002, -1.037434e-002, -4.148310e-002, -2.579089e-002, 2.994418e-002, 4.609706e-002, 5.248573e-002, 2.705971e-002, -3.566365e-002, -8.507356e-002, -1.069657e-001, -8.964607e-002, -6.388770e-002, -8.634135e-002, -1.323943e-001, -5.684495e-002, -2.062286e-002, -4.360207e-002, -5.274164e-002, -6.843038e-003, 4.014462e-002},
{5.987575e-002, 3.785677e-002, 7.070139e-002, 6.108490e-002, 5.861539e-002, 1.193357e-001, 1.615069e-001, 1.647607e-001, 1.212555e-001, 5.811344e-002, 1.959453e-002, 6.400614e-003, 2.176172e-002, 6.434078e-002, 1.206879e-001, 1.553051e-001, 1.662983e-001, 1.480737e-001, 1.177097e-001, 8.840092e-002, 7.839394e-002, 1.195006e-001, 1.734164e-001, 2.118545e-001, 3.834335e-002, -5.424629e-004, 3.263109e-002, 2.524061e-002, 6.788432e-003, 2.593128e-002, 3.236499e-002, 1.378970e-002, -1.586857e-002, -4.361779e-002, -4.930976e-002, -5.871274e-002, -6.531036e-002, -4.048585e-002, -4.535111e-004, 3.513346e-002, 4.768023e-002, 2.864023e-002, -5.220891e-003, -4.186693e-002, -5.468856e-002, -2.780460e-002, 4.792896e-002, 1.156006e-001, 1.441690e-002, -2.732762e-002, 3.207101e-003, 4.661879e-003, -2.360931e-002, -2.318836e-002, -1.079171e-002, 6.239950e-003, 3.885125e-002, 6.972315e-002, 9.076960e-002, 7.633605e-002, 3.872277e-002, -7.371409e-003, -2.956391e-002, -2.771483e-002, -1.954832e-002, -3.285575e-002, -5.477372e-002, -7.053732e-002, -4.676658e-002, -1.099486e-002, 5.800786e-002, 1.200271e-001, -3.017655e-003, -2.802117e-002, 9.853308e-003, 3.189374e-002, 3.850489e-002, 1.726423e-002, 5.959251e-003, 2.011317e-002, 3.631197e-002, 3.347368e-002, 2.341226e-002, 2.271397e-004, 3.523024e-003, 9.322794e-003, 1.013493e-002, 1.098085e-002, 2.779543e-003, -1.144881e-003, -1.213849e-002, 1.047670e-002, 2.277042e-002, 1.788241e-002, 4.681530e-002, 9.792773e-002, 7.571758e-003, -3.421022e-003, 1.511792e-002, 3.390956e-002, 3.531664e-002, -4.226698e-002, -2.517674e-002, 4.807463e-002, 6.726749e-002, 5.629797e-002, 4.573104e-002, 3.775127e-002, 2.126525e-002, -4.282815e-003, -1.277609e-003, 2.494009e-002, 1.766139e-002, -4.149538e-003, 3.406400e-003, 2.086201e-002, -1.214060e-002, -2.517918e-002, 2.887067e-002, 9.066826e-002, 1.061143e-002, 3.530340e-004, -1.549961e-002, -4.751552e-002, -1.875409e-002, -7.760472e-002, -1.814110e-002, 2.476651e-002, 1.389490e-002, -1.105843e-002, -1.595605e-002, 1.877050e-002, 3.640850e-002, 7.943656e-003, -1.313298e-002, 3.216776e-003, 3.158283e-003, -2.694555e-002, 3.686153e-003, 1.551248e-002, -3.591747e-002, -6.117456e-002, -1.140979e-002, 5.844298e-002, -9.221386e-003, -1.254112e-002, -1.949325e-002, -5.137458e-002, -5.566514e-003, -8.503863e-002, -4.715396e-002, -1.966929e-002, -1.255899e-004, -2.178743e-004, -1.510023e-002, -6.559606e-003, -1.159241e-002, -3.677920e-002, -2.248328e-002, -1.932569e-002, 1.094189e-002, 3.735974e-002, 7.350063e-002, 2.829962e-002, -1.262940e-002, -1.765746e-002, 3.401449e-002, 1.006947e-001, -7.615210e-003, -9.362378e-003, 4.570980e-002, 8.710126e-003, 2.498042e-002, 2.429021e-002, 1.056146e-001, 1.173307e-002, -2.999500e-002, -1.527912e-002, -4.109574e-002, -4.730435e-002, -2.822642e-002, -1.078497e-002, 7.081959e-003, -5.107034e-002, -5.407070e-002, -3.757751e-002, 6.870838e-004, -3.880391e-002, 4.785433e-002, 6.758643e-002, -3.654546e-002, -1.035886e-002, 1.015405e-003, -8.473147e-003, 2.002440e-002, -6.426907e-002, -3.705140e-002, 4.978580e-002, 5.374083e-002, -1.047404e-001, -1.128101e-001, 7.484526e-002, 1.093945e-001, -1.121213e-002, 1.603595e-003, 3.028486e-002, 7.465318e-002, -1.847111e-002, -1.388527e-002, -1.047821e-002, -3.738350e-004, -6.426596e-002, 4.243738e-003, 8.570956e-002, 3.113478e-002, 6.752362e-002, -1.799949e-002, -3.505929e-002, -8.996734e-003, -1.405785e-002, 1.551219e-002, 1.346639e-002, -8.255894e-003, -2.641945e-002, -4.147181e-003, 3.041024e-002, 1.995636e-002, -1.580216e-002, -3.986339e-002, 1.268871e-002, 8.712317e-002, 2.864499e-002, 5.433269e-002, 3.155300e-004, -1.678241e-003, 9.286896e-004, -3.247403e-002, -1.147460e-002, -4.574189e-003, 3.260241e-002, 1.772608e-003, -8.232833e-003, 8.745690e-003, 3.782409e-002, 4.961415e-002, 1.215216e-002, 3.693064e-003, 4.423417e-002, 8.062606e-002, 8.456354e-002, 6.885873e-002, 2.925215e-002, -1.747837e-002, 2.624520e-002, 7.655138e-002, 5.512860e-002, 5.909551e-002, -1.635040e-002, -2.223117e-002, 3.891681e-002, 2.100718e-002, -3.740053e-002, -1.091319e-002, 2.452616e-002, 1.174575e-002, 1.055314e-002, 1.085101e-002, 2.868290e-002, 4.880395e-002, -2.936049e-002, -3.440268e-002, 1.249394e-002, 4.163906e-002, 3.885316e-002, 1.357333e-002, -1.670536e-002, -2.894503e-002, 1.038924e-002, 2.004547e-002, 5.341589e-002, 6.380295e-002, 7.445308e-003, -7.585586e-003, 3.795725e-002, 9.145095e-002, -7.218048e-003, -4.900160e-002, -2.058039e-002, 7.291567e-003, 9.948758e-003, -1.388876e-002, -1.836599e-002, 1.575398e-002, -7.141585e-002, -8.845042e-002, -4.913260e-002, -3.492385e-002, -3.498707e-002, -5.212289e-002, -5.802499e-002, -5.089303e-002, -2.781875e-002, -2.862329e-002, 3.186249e-002, 6.907990e-002, 4.148825e-002, 1.585103e-002, 2.551692e-002, 7.657399e-002, 5.659127e-002, -1.695159e-002, -4.540319e-002, -1.994526e-002, -9.441052e-003, -2.513639e-002, -4.812865e-002, -2.559066e-002, -5.395560e-002, -8.519037e-002, -7.500467e-002, -7.429107e-002, -7.353596e-002, -7.212028e-002, -5.811644e-002, -3.095193e-002, -3.986902e-002, -3.367464e-002, 2.086095e-002, 6.801467e-002, 3.356605e-002, 1.400269e-002, 1.768662e-002, 1.611690e-002, 2.995036e-002, 1.259872e-002, -5.880378e-003, -3.285785e-002, -2.699653e-002, -2.501412e-002, -5.104954e-002, -4.613516e-002, -5.914760e-002, -4.677656e-002, -2.777622e-002, -2.756825e-002, -3.030823e-002, -4.142598e-002, -4.005448e-002, 2.499785e-003, -4.649858e-003, -3.460763e-002, 9.291458e-003,


© ISO/IEC 2004 — All rights reserved

Copyright International Organization for Standardization
Provided by IHS under license with ISO
No reproduction or networking permitted without license from IHS
Not for Resale

4.047500e-002, -8.778092e-003, -1.541734e-002, -3.738343e-003, -1.959135e-002, -5.599585e-002, -4.059718e-002, -3.937528e-003, -3.165809e-003, -1.992982e-002, -1.140620e-002, -2.247838e-002, -2.179984e-002, -2.990818e-002, -1.802996e-002, 2.470731e-003, -5.170477e-003, -2.113576e-002, -4.308005e-002, -2.041554e-002, 4.893672e-002, -1.029982e-002, -5.504322e-002, 4.825889e-003, 9.330910e-003, -1.176360e-002, 2.098615e-003, -1.383703e-002, -4.203544e-002, -4.775209e-002, -7.310985e-002, -6.196773e-002, 2.814829e-002, -2.923117e-003, 5.940981e-003, 1.196383e-002, 4.934244e-003, 4.801713e-003, 2.409662e-002, 3.541247e-002, 2.073394e-002, -1.485302e-002, -3.753571e-002, -2.391671e-002, 4.562537e-003, -7.008998e-002, -3.674381e-002, 2.282144e-002, 1.133522e-002, 3.886301e-002, 7.398393e-002, 2.016357e-002, -5.875490e-002, -3.209880e-002, -3.293969e-002, -5.924572e-002, 1.865443e-002, 1.100001e-002, 6.160154e-003, 3.354701e-002, 2.195681e-002, 1.786303e-002, 3.284521e-002, 4.162921e-002, 2.102927e-002, -1.580304e-002, -3.391035e-002, -3.618930e-002, -2.451366e-002, -2.910772e-002, 2.687569e-002, 2.454478e-004, -3.743490e-002, -6.822227e-003, 3.576058e-002, 1.141582e-002, -5.337382e-002, -2.366624e-002, 4.966675e-003, -3.146944e-002, -1.893386e-002, 2.280202e-002, -9.453678e-003, 2.801524e-002, 2.766244e-002, 1.520380e-002, 1.822439e-002, 3.467094e-002, 1.467074e-002, -6.840194e-003, -2.059084e-002, -2.454154e-002, 2.728248e-002, 6.397388e-002, 4.558875e-002, -1.100658e-002, -2.757112e-002, -3.777275e-002, -7.346183e-002, -6.501913e-003, 5.371774e-002, 5.136567e-002, 2.286343e-002, 2.303052e-003, -3.152086e-002, 3.395347e-002, -2.659979e-002, 1.193679e-002, 1.975596e-002, 1.086017e-002, -2.114520e-003, 2.171942e-002, 1.830662e-002, 1.132593e-003, -2.869055e-002, -1.935738e-002, 3.782555e-002, 6.169848e-002, 8.985504e-003, -2.328967e-002, -6.742130e-003, -3.146180e-003, -7.562626e-002, -3.891140e-002, 6.153350e-002, 7.551904e-002, 2.314614e-002, -2.396972e-003, -3.135786e-002, 5.187104e-002, -3.181250e-002, -1.215787e-002, 1.432779e-003, -2.912102e-003, -1.636558e-002, 6.547383e-003, 2.059799e-002, -1.585228e-002, -5.090072e-002, -3.593466e-002, -2.145874e-002, -1.631207e-002, -4.338371e-002, -4.318312e-002, -3.387264e-003, 2.076373e-002, -2.625143e-002, -2.954037e-002, 1.140614e-002, 1.096393e-002, -6.464303e-003, -2.086156e-002},
{-6.349792e-002, -8.292296e-003, 2.743693e-003, -1.855693e-002, -6.351786e-004, 2.206315e-002, 2.640520e-002, 2.184688e-002, 1.514516e-002, -2.599928e-003, -1.601794e-002, -2.333253e-002, -2.503751e-002, -2.849534e-002, -2.423826e-002, -1.793048e-002, -7.944104e-003, 1.262937e-002, 1.473237e-002, -1.900354e-003, -3.019724e-002, -5.475982e-002, -7.523915e-002, -8.989401e-002, -3.536410e-002, -3.155249e-003, -1.304620e-003, -1.906557e-002, -7.106179e-003, -6.161034e-003, -7.753798e-003, -5.235932e-003, -2.401104e-002, -2.702206e-002, -1.159083e-002, 1.290389e-003, 2.942942e-003, 4.058794e-003, 6.946118e-003, 1.620840e-002, 2.339368e-002, 4.583392e-002, 5.467252e-002, 3.536781e-002, -2.543179e-004, -3.484014e-002, -4.405247e-002, -5.410628e-002, -3.086939e-003, 2.985021e-004, -1.170938e-002, -2.470016e-002, -3.136066e-002, -3.270433e-002, -2.504811e-002, -3.125627e-002, -4.676149e-002, -3.942473e-002, -4.857393e-003, 1.596463e-002, 1.709147e-002, 2.796139e-002, 4.163557e-002, 5.026979e-002, 5.196266e-002, 6.363743e-002, 7.608771e-002, 6.111800e-002, 1.412568e-002, -1.638397e-002, -1.896162e-002, -2.968990e-002, 1.907250e-002, -3.743200e-003, -2.694474e-002, -2.634789e-002, -4.108338e-002, -3.305897e-002, -3.592007e-002, -4.848042e-002, -2.400123e-002, 9.542130e-003, 1.623033e-002, -1.815154e-002, -4.831302e-002, -3.235722e-002, 9.553765e-003, 4.404781e-002, 4.239988e-002, 5.392534e-002, 6.729170e-002, 5.952441e-002, -5.494482e-003, -3.083747e-002, -3.881689e-002, -6.071185e-002, 2.837857e-002, -1.456468e-002, -2.771397e-002, -9.009937e-003, -4.497184e-002, -7.948817e-002, -1.292173e-001, -1.190727e-001, -5.160131e-002, -1.078710e-002, -1.011052e-002, -1.993192e-002, -4.480310e-002, -3.483133e-002, 9.434478e-003, 2.926483e-002, 2.227645e-002, 2.919735e-002, 4.054479e-002, 4.908108e-002, 1.670847e-002, -1.547512e-003, -3.780074e-002, -6.895433e-002, 1.835328e-002, -1.605035e-002, 1.425233e-003, 2.053561e-002, -2.423746e-002, -1.750063e-002, -4.279782e-002, -3.439621e-002, -2.152964e-002, -3.598323e-002, -5.950591e-002, -5.275158e-002, -4.135073e-002, -1.477555e-002, 2.822909e-002, 3.402150e-002, 6.287584e-003, -2.257830e-002, -1.591304e-002, 3.051079e-002, 3.689077e-002, 7.046777e-003, -3.200180e-002, -5.275742e-002, 6.000320e-003, 1.989945e-003, 3.402991e-002, 1.232499e-002, 6.118151e-003, 3.548080e-002, -3.236431e-002, -6.357365e-002, -5.724619e-002, -5.273696e-002, -1.158347e-001, -1.304230e-001, -1.047100e-001, -7.141233e-002, -1.353105e-002, 3.936073e-002, 2.685304e-002, -8.697803e-003, -3.613497e-002, 1.169193e-002, 1.110972e-002, -1.636616e-002, -5.763181e-002, -8.036290e-002, 3.282857e-002, 2.059681e-002, 6.017882e-002, 8.850071e-003, -1.676462e-002, -1.349696e-002, -4.675903e-002, -3.878763e-002, -4.943877e-002, 2.092695e-002, -1.930483e-002, 3.187631e-002, -3.680238e-003, -7.699992e-002, -8.349266e-002, 1.560625e-002, 2.685002e-002, 1.339357e-002, 9.118205e-004, 1.342058e-002, -8.557605e-003, -3.237834e-002, 1.197569e-002, 5.796772e-002, 3.604867e-002, 1.062312e-002, 4.424017e-002, 2.492118e-002, -1.256499e-002, -5.677883e-003, -1.452326e-002, -8.953877e-002, -1.792057e-001, -1.344472e-002, 2.119353e-002, 4.935263e-003, 4.349337e-002, -7.263179e-002, -8.464083e-002, 9.075056e-003, -7.182288e-002, -7.924051e-002, -4.301150e-002, -1.467951e-003, -6.192654e-002, -3.722298e-002, 5.341111e-002, 7.280358e-002, 3.259445e-003, -3.405611e-002, -7.382465e-003, 2.214615e-002, 1.181802e-002, 4.055422e-003, -1.398288e-002, -4.394571e-002, -6.603998e-002, -1.816146e-002, -1.233921e-002, -4.125487e-002, -2.544786e-002, -5.336251e-002, -1.064901e-002, 4.867518e-002, -

© ISO/IEC 2004 — All rights reserved


Copyright International Organization for Standardization
Provided by IHS under license with ISO
No reproduction or networking permitted without license from IHS
Not for Resale

8.452026e-002, -3.459886e-002, 5.429268e-003, 1.413259e-002, -6.842366e-002, -8.072151e-002, -2.898987e-002, -1.222474e-002, 9.446192e-004, -2.862075e-002, -2.858524e-002, 2.313591e-002, 2.623342e-002, -8.982221e-003, 2.485916e-004, 9.696833e-003, 1.398151e-002, 2.760040e-002, 1.106183e-002, -2.074492e-002, -3.216935e-002, -2.804036e-002, 6.154941e-002, 5.605504e-002, -3.644201e-002, 2.712752e-002, 5.289251e-002, 4.521657e-002, -2.872290e-002, -7.453803e-002, -3.658811e-002, -1.330546e-002, -1.273765e-002, 5.476862e-004, -3.452043e-002, 3.902256e-003, 3.060594e-002, -5.622924e-004, 2.158236e-003, 1.395631e-002, 7.137233e-003, 5.745825e-003, -1.010881e-002, -2.925986e-002, -3.101975e-002, 1.331211e-002, 9.893775e-002, 4.420106e-002, 2.129116e-003, 4.702082e-002, 6.957031e-002, 3.978834e-002, 4.139776e-002, -5.278562e-003, 2.693152e-003, 5.477991e-003, -2.424306e-002, 2.260583e-002, -2.341499e-002, -1.841958e-002, 5.159846e-003, 2.449472e-002, 3.565020e-002, 3.330208e-002, 1.459541e-002, 4.126159e-003, -1.581154e-002, -4.163274e-002, -3.052454e-002, 4.257415e-002, 5.350890e-002, 3.500621e-002, 1.353282e-002, 3.819161e-002, 6.077833e-002, 2.236750e-002, 4.468853e-002, 8.594346e-002, 6.503554e-002, 5.002155e-002, -4.316250e-002, 2.030044e-002, -1.984411e-002, -2.777865e-002, -3.136453e-002, 8.931405e-003, 7.028222e-002, 7.369320e-002, 4.864597e-002, 2.036778e-002, -8.306864e-003, -1.515469e-002, 3.563087e-002, 3.460553e-002, 4.210588e-004, 2.557259e-002, 2.173772e-002, 4.102212e-002, 3.815403e-002, 1.083939e-002, 2.226040e-003, 7.891796e-002, 1.399621e-001, 1.242412e-001, -3.406759e-002, 3.834919e-004, -1.305052e-002, -4.531358e-003, -2.061358e-002, -9.094921e-004, 5.703222e-002, 7.024282e-002, 5.880388e-002, 4.025027e-002, 3.506484e-002, 5.591629e-002, 5.317021e-002, -2.531241e-002, -1.944132e-002, 2.643154e-002, 2.706132e-002, 5.675281e-002, 2.332258e-002, -1.359231e-003, 3.827209e-003, 2.404988e-003, 6.419821e-002, 1.266659e-001, 1.776710e-002, -3.307017e-003, -4.032588e-003, 1.624550e-002, 1.288964e-002, 2.248926e-002, 7.103523e-002, 9.485710e-002, 9.831634e-002, 9.118010e-002, 8.274676e-002, 7.164138e-002, 1.365886e-002, -8.004823e-002, -2.186413e-003, 3.248936e-002, 2.745145e-002, 7.178462e-002, 7.273998e-003, -4.227822e-002, -6.765406e-003, 1.539886e-002, 8.843335e-003, 4.817852e-002, 5.866123e-002, 2.285021e-002, 3.448954e-003, 1.820987e-002, 3.732394e-002, 4.107148e-002, 6.824423e-002, 8.456292e-002, 7.744300e-002, 5.647434e-002, 3.946697e-002, 4.784222e-002, 6.556418e-004, -7.128383e-002, 6.868732e-002, 5.244693e-002, -1.615692e-002, 2.911363e-002, -1.632089e-003, -1.539750e-002, -1.832945e-002, 2.013773e-002, 4.991935e-002, 3.427017e-002, 3.203659e-002, 1.385873e-002, 5.487933e-003, 8.414950e-003, 3.347272e-002, 3.270277e-002, 4.584818e-002, 5.612071e-002, 3.500780e-002, -3.807737e-003, 1.795442e-002, 9.298572e-002, 4.667046e-002, -4.009841e-002, 7.651071e-002, 3.782037e-002, -5.935362e-002, -3.337293e-002, -4.781068e-002, 2.519955e-002, 2.108164e-003, -1.454322e-002, 7.920193e-002, 8.898222e-002, -4.744803e-002, -5.652120e-002, -1.073436e-003, -1.172605e-002, 1.909843e-002, 2.029230e-002, 2.219277e-002, 1.644598e-002, -1.145301e-002, -2.818306e-002, 4.218957e-002, 1.260532e-001, 8.351917e-002, -1.161866e-002, 9.154440e-003, -1.045409e-002, -3.784239e-002, 1.909025e-003, -3.585753e-002, -2.558941e-004, -3.005673e-002, -6.826205e-002, 4.256096e-002, 1.164818e-001, 3.155725e-003, -6.057420e-002, -1.321940e-003, -2.254801e-002, -8.620043e-003, 3.471602e-003, -4.237783e-003, -2.000951e-002, -4.041560e-002, -2.818330e-002, 2.837310e-002, 4.439427e-002, 1.769972e-002, 2.427052e-002, 6.491580e-002, 3.096416e-002, 5.721437e-003, 3.270320e-002, 8.063169e-004, 2.936476e-002, 1.042132e-002, -5.145284e-002, -2.677096e-002, 4.201280e-002, 1.790674e-001, 3.921348e-002, 2.364010e-002, -2.726662e-002, -3.295140e-002, -6.372854e-003, -2.251755e-002, -4.554995e-002, -5.520791e-002, -5.570788e-002, -6.630222e-002, -1.054384e-001, -1.197018e-001, -8.088269e-002, -3.453338e-002, -3.772216e-002, -4.590694e-002, -3.015528e-002, -7.230988e-002, -5.982910e-002, -6.097373e-002, -9.818067e-002, -1.040185e-001, -6.641013e-002},
{-3.208786e-002, -1.934584e-002, -3.013277e-002, -2.069797e-002, 1.599190e-002, 8.621656e-002, 1.062733e-001, 6.934424e-002, 2.188663e-002, -4.342462e-003, 3.721992e-003, 3.543941e-002, 7.851222e-002, 1.071430e-001, 1.305450e-001, 1.260038e-001, 1.189127e-001, 1.112443e-001, 9.887167e-002, 1.014880e-001, 8.621662e-002, 5.708738e-002, 9.000987e-003, -2.401006e-002, -1.712479e-003, -3.213545e-003, -2.101468e-002, -1.719605e-002, -3.110851e-002, -1.218594e-002, -4.780583e-003, -2.551789e-002, -6.500224e-002, -9.203583e-002, -8.712171e-002, -6.619122e-002, -2.668715e-002, 1.902489e-002, 5.157558e-002, 6.490053e-002, 5.518465e-002, 4.330188e-002, 3.117358e-002, 2.324929e-002, 1.695732e-003, -3.374100e-002, -7.947987e-002, -1.054898e-001, 2.679260e-002, 7.859786e-003, 3.740727e-004, -1.767990e-002, -8.457018e-002, -4.900549e-002, -1.148779e-002, -4.770443e-003, -6.750522e-003, -5.737786e-003, -4.556008e-003, -1.930574e-002, -4.065092e-002, -2.200289e-002, 4.499607e-003, 3.261079e-002, 3.027444e-002, 6.888376e-003, -7.028975e-003, -6.336662e-003, -1.217986e-002, -1.459594e-002, -3.652062e-002, -6.813647e-002, 2.664049e-002, 1.090736e-002, 2.952234e-002, 8.437510e-004, -3.449447e-002, 1.260058e-002, -3.826901e-002, -1.016363e-001, -6.582841e-002, 7.841369e-003, 3.934868e-002, 4.805336e-003, -5.824910e-002, -7.771944e-002, -3.167276e-002, 3.745550e-002, 6.157049e-002, 4.461025e-002, 1.229186e-002, 1.333942e-002, -9.239955e-004, -2.795769e-002, -5.145273e-002, -7.251968e-002, -6.932797e-003, -1.445292e-003, 3.509249e-002, 2.472593e-002, 3.335260e-002, 1.428740e-002, -7.841586e-002, -1.058801e-001, -4.829519e-002, 1.752696e-002, 5.236149e-002, 2.735651e-002, -4.251909e-002, -1.013419e-001, -9.721043e-002, -1.772354e-002,


© ISO/IEC 2004 — All rights reserved

Copyright International Organization for Standardization
Provided by IHS under license with ISO
No reproduction or networking permitted without license from IHS
Not for Resale

5.099313e-002, 3.990852e-002, -1.522903e-002, -3.323933e-002, -5.966001e-002, -5.971031e-002, -2.541035e-002, 2.299448e-003, -3.577680e-002, -2.402426e-002, 1.698254e-002, 8.274624e-003, 2.203349e-002, 1.691467e-002, -2.392142e-002, -1.926693e-002, 5.466456e-003, 2.374125e-002, 1.933470e-002, 3.078898e-003, 5.750724e-003, -3.750061e-003, -4.432246e-002, -3.508770e-002, 2.341096e-002, 8.659653e-004, -6.812586e-002, -6.749776e-002, -5.141642e-002, 9.251246e-003, 1.880834e-002, -3.023369e-003, 8.705980e-003, -1.684342e-002, -1.196791e-002, -4.486436e-002, 3.177160e-002, 6.404825e-002, 5.025965e-002, 4.556419e-002, 4.332024e-002, 5.269947e-002, 3.829358e-002, 2.146700e-002, 4.469305e-002, 6.839409e-002, 3.113875e-002, -2.130308e-002, 2.328521e-002, 3.605292e-002, -2.278068e-002, 1.072649e-002, -8.097575e-003, 6.077218e-003, 5.028800e-003, -4.619661e-002, 3.384409e-002, 6.200863e-003, -4.555159e-003, 3.768589e-003, 6.814969e-002, 2.550256e-002, -3.695162e-002, 2.910375e-002, 2.793777e-002, 1.595070e-002, -5.130533e-003, 1.384925e-002, 9.522315e-002, 3.095377e-003, -4.441685e-002, -7.550269e-002, -5.111472e-002, -4.520619e-003, -1.802878e-002, 6.701509e-002, -7.474567e-002, -1.222245e-002, 1.325429e-001, 1.653297e-002, -2.388620e-002, -3.802932e-002, -2.975078e-002, 2.223155e-003, 1.948386e-002, -6.710058e-002, -3.646362e-002, 8.055304e-002, 1.657131e-002, 1.433356e-002, -6.039222e-003, -4.603696e-002, -9.020586e-003, -1.005277e-001, -7.536432e-002, -6.255550e-002, -1.171263e-001, -9.857443e-002, -1.158880e-001, 1.375153e-002, -9.888642e-002, -4.908195e-002, 4.171924e-002, -6.237026e-002, -3.349442e-002, 1.231406e-003, -1.632263e-002, -2.546889e-002, -1.361577e-002, -7.396459e-003, 5.859235e-002, 8.923876e-002, 1.676971e-002, -8.995099e-003, 1.644576e-002, 2.765156e-002, 4.040920e-002, -3.285878e-002, 4.760761e-004, -3.476129e-002, -8.861645e-002, -8.747922e-002, -1.435603e-001, -5.531341e-002, -3.987911e-002, -8.344010e-004, 2.415835e-003, -6.517389e-002, -1.104389e-002, 3.049605e-002, 6.623941e-003, -5.014070e-003, -1.025622e-002, 4.898997e-003, -6.749408e-004, -4.228980e-002, -8.925613e-002, -9.383139e-002, -3.868705e-002, 2.093383e-002, 3.264067e-002, -1.772033e-002, 1.974431e-002, -5.496658e-002, -6.992920e-002, -5.783174e-002, -1.190213e-001, -9.833173e-002, -6.386004e-002, 1.762390e-002, 2.505966e-002, -3.535820e-002, -6.787786e-004, 2.808383e-002, -1.398501e-003, 1.382899e-002, 6.961738e-003, 1.798434e-004, -1.362945e-002, -4.929635e-002, -7.178851e-002, -5.047980e-002, 4.017278e-003, 2.824675e-002, -1.937034e-002, -5.448949e-002, -1.258648e-002, -7.405834e-002, -4.792022e-002, -1.528444e-002, -6.940438e-002, -8.014497e-002, -9.131248e-002, -3.604947e-002, 4.132864e-002, 2.244561e-002, -8.481484e-003, 1.983598e-002, -1.287112e-002, 1.615559e-002, 1.339776e-002, -3.112356e-004, -4.681851e-003, -2.506575e-002, -2.729915e-002, -1.689372e-003, 1.759383e-002, -2.291968e-002, -1.134114e-001, -8.182003e-002, -3.291994e-002, -5.325054e-002, -2.510810e-002, 3.019932e-002, -3.096935e-003, -5.027426e-002, -3.788869e-002, -5.617483e-002, -2.196926e-002, 1.416624e-002, -1.637964e-002, 1.361336e-002, -1.793585e-002, -2.850678e-003, -1.584268e-002, -1.901955e-002, -5.759861e-003, -6.459247e-003, -6.958004e-003, -7.180431e-003, -2.489975e-002, -9.404406e-002, -1.151342e-001, -3.516847e-002, -1.400204e-003, -1.487750e-002, -1.031570e-003, 6.363132e-002, 6.317798e-002, -1.436074e-002, 9.453937e-003, 2.573453e-002, -2.458203e-002, -2.987146e-002, 3.701594e-003, 2.528453e-002, -4.159431e-003, -9.540151e-003, -4.724070e-002, -3.936896e-002, -9.171326e-003, 1.662382e-003, 8.816057e-003, 1.945957e-003, -2.813209e-002, -4.927691e-002, -1.122917e-002, 3.171008e-002, 4.022197e-002, 5.319721e-002, 4.105803e-002, 7.374034e-002, 8.249269e-002, 4.184345e-002, 1.025204e-002, 5.421590e-002, 3.283784e-002, -2.418477e-003, 2.184988e-002, 3.473324e-002, 4.077194e-003, -7.948171e-003, -4.170227e-002, -4.155887e-002, -1.076984e-002, 1.161381e-002, 1.063738e-002, -8.619944e-003, -2.565577e-002, 6.101469e-003, 2.727826e-002, 1.690057e-002, 3.792477e-002, 5.422057e-002, 2.625427e-002, 2.468744e-002, 4.320868e-002, 7.897125e-002, -1.073738e-002, 4.702959e-003, 2.944131e-003, -3.199569e-002, 2.980684e-002, 2.730370e-002, -2.610876e-003, 1.634131e-003, -1.704995e-002, -1.561860e-002, 8.462853e-003, 1.810379e-002, 6.407597e-003, -1.345267e-002, -1.070368e-003, 3.943157e-002, 7.680467e-003, -2.507093e-002, -1.743000e-004, 2.864111e-002, 3.159074e-002, 5.122422e-002, 6.818497e-002, 1.317208e-001, -1.476340e-003, -1.559997e-002, 1.162812e-002, -5.344171e-002, 1.288185e-002, -3.634044e-003, -1.787649e-002, 5.712984e-003, 5.294298e-003, 1.640135e-002, 3.606405e-002, 3.699683e-002, 1.715180e-002, -7.084664e-004, 1.835047e-002, 4.628390e-002, -3.636809e-004, -2.021824e-002, 2.770374e-002, 6.208350e-002, 7.145188e-002, 8.565601e-002, 5.149647e-002, 1.056114e-002, -6.150352e-002, -1.629790e-003, 8.608541e-002, 1.197401e-002, -1.373848e-002, -2.721466e-002, -2.920897e-002, 1.307757e-002, 9.908696e-003, 2.168408e-002, 3.948367e-002, 3.278468e-002, 1.425001e-002, 7.021789e-004, 2.766557e-002, 3.327884e-002, -2.199559e-002, -1.433440e-002, 9.147036e-002, 8.319019e-002, 2.482890e-002, 7.524234e-003, 2.025216e-002, 1.973496e-002, -6.046673e-002, -1.518191e-002, 8.371142e-002, 7.345454e-002, 1.130894e-002, -3.677296e-002, -2.644766e-002, 1.502933e-002, 9.509212e-003, 1.594671e-002, 2.477492e-002, 1.298673e-002, -7.960016e-003, 2.493403e-003, 4.404084e-002, 2.671472e-002, -3.622775e-002, -3.605531e-002, 3.370696e-002, 5.531668e-002, 4.351392e-002, 1.260638e-002, 1.785592e-003, 3.213610e-002, 9.972014e-003, 8.671624e-004, 2.224792e-002, 4.772260e-002, 9.549265e-002, 1.909986e-002, -5.826473e-003, 1.712715e-002, 7.927723e-003, -4.527749e-004, 6.847416e-003, -8.195162e-003, -

© ISO/IEC 2004 — All rights reserved


--`,,```,,,,````-`-`,,`,,`,`,,`---

Copyright International Organization for Standardization
Provided by IHS under license with ISO
No reproduction or networking permitted without license from IHS
Not for Resale

1.735021e-002, 1.463357e-002, 6.490058e-002, 5.324446e-002, 1.722374e-002, 2.241161e-002, 5.603996e-002, 6.778219e-002, 4.208259e-002, 3.045260e-003, -1.019477e-002, 2.654760e-002, 4.752986e-002, 3.216591e-002, 1.418089e-002, 1.124528e-002},
{1.225582e-002, 5.111749e-002, 2.610870e-002, 3.156648e-002, 2.182437e-002, 5.180755e-002, 8.972288e-002, 8.687118e-002, 4.685481e-002, 4.280758e-003, -1.358794e-002, -1.033580e-002, 1.176748e-002, 1.475524e-002, 1.273355e-002, -3.811876e-003, -2.314304e-002, -3.658143e-002, -4.251747e-002, -3.844977e-002, -4.499676e-002, -6.306870e-002, -8.934295e-002, -8.943451e-002, 6.637785e-003, 1.373838e-002, -2.220700e-002, 1.133175e-002, 3.691398e-003, 3.337346e-002, 7.055106e-002, 8.358572e-002, 6.569851e-002, 3.645260e-002, 1.112736e-002, -7.722801e-003, -1.244940e-002, -2.075246e-002, -2.054743e-002, -3.032852e-002, -4.549243e-002, -5.798290e-002, -4.857549e-002, -3.379266e-002, -1.937686e-002, -5.080582e-003, -3.614789e-003, -2.538809e-003, 1.836198e-003, -3.445227e-002, -4.781262e-002, 8.242141e-003, -2.448422e-002, -1.741671e-002, 4.085798e-002, 6.949834e-002, 5.248282e-002, 3.211643e-002, 1.827212e-002, -8.277281e-003, -3.801035e-002, -4.950142e-002, -4.291297e-002, -3.103317e-002, -3.224191e-002, -4.326053e-002, -2.737660e-002, -5.645745e-003, 7.603667e-003, 1.964555e-002, 2.796958e-002, 3.273474e-002, 2.788926e-003, -4.652140e-002, -2.944042e-002, 2.013197e-002, -3.653190e-002, 2.301512e-002, 6.933368e-002, 3.718782e-002, 4.976035e-003, 9.808680e-003, 1.664866e-002, -4.526266e-003, -3.248681e-002, -4.914924e-002, -2.452287e-002, 1.948305e-002, 2.983589e-002, 1.615687e-002, 1.581029e-002, 2.346607e-002, -3.288827e-002, -6.304170e-002, -2.829537e-002, 4.929022e-002, 1.411426e-002, -1.195158e-002, 1.388315e-002, 3.244004e-003, -3.943601e-002, 3.628972e-002, 4.341208e-002, 2.243341e-002, 2.041747e-002, 3.070541e-002, 2.689514e-002, -8.279751e-003, -3.476566e-002, -3.569301e-002, -2.847705e-002, 2.679354e-002, 5.218841e-002, 4.308935e-002, 3.391199e-002, 1.179719e-002, -8.102037e-002, -7.995449e-002, 8.846407e-003, 9.441141e-002, 1.679222e-002, 1.826377e-002, 3.079018e-002, -3.619081e-002, -2.975942e-002, 3.967428e-002, 1.870542e-002, -8.476324e-003, -8.662310e-003, -5.635690e-003, -1.429188e-002, -4.602353e-002, -5.137485e-002, -1.627414e-002, 1.477885e-002, 1.808249e-002, 2.128179e-002, 1.327445e-002, 1.023930e-002, 3.061734e-002, -2.523150e-002, -4.389519e-002, -3.722980e-002, -2.974892e-002, -7.594534e-003, 2.682393e-002, 3.359452e-002, -2.469417e-002, -8.564215e-003, -2.720534e-002, -1.033902e-001, -1.075240e-001, -6.843272e-002, 3.483971e-002, 4.940767e-002, -3.356444e-002, -9.491874e-002, -7.984411e-002, 6.494724e-003, -1.439257e-002, -3.209251e-002, -1.965322e-002, -1.298088e-002, 1.896165e-002, -3.116704e-003, -3.262036e-002, 9.466412e-003, 9.587855e-002, -2.606584e-002, 1.178976e-002, 2.875793e-002, 4.437772e-002, 7.537854e-003, -1.977531e-002, 8.630486e-003, -2.215811e-002, -1.067078e-001, 3.876501e-002, 5.732603e-002, 3.236584e-002, 2.702815e-002, -1.243323e-001, -9.720330e-002, -1.012328e-001, -5.809587e-002, -1.060459e-003, -1.436412e-002, -3.578013e-002, -4.051023e-002, -1.431222e-002, 2.734303e-002, 1.081984e-001, -8.517706e-004, 1.140851e-002, -1.140589e-002, -1.534430e-002, -3.612061e-002, 1.391127e-002, 7.560826e-002, 2.702947e-002, -7.199653e-002, 2.250651e-002, -1.049465e-002, 5.983580e-002, 1.285791e-001, -1.239481e-001, -4.857409e-002, -6.124067e-002, -3.035686e-002, 2.789365e-002, -4.185403e-002, -7.986892e-002, -8.707612e-002, -3.792385e-002, -2.098950e-002, 5.365697e-002, 2.386698e-002, -1.440228e-002, -2.742895e-002, -1.079711e-002, 3.720101e-003, 3.889600e-002, 3.481387e-002, -1.065030e-002, -5.810497e-002, -8.411152e-002, -2.557127e-002, 7.322339e-002, 4.471062e-002, -5.519460e-002, 7.104617e-002, -2.218411e-003, 3.890701e-003, 4.684118e-002, -7.591592e-003, -3.412363e-002, -3.191785e-002, 2.316276e-003, 1.159692e-002, 1.697476e-002, 4.152648e-002, -8.005286e-003, -3.024993e-002, -1.123098e-002, 1.137218e-003, -2.477314e-003, -2.219804e-002, -7.614922e-002, -1.305914e-001, -1.197040e-001, -3.691789e-002, 3.107644e-002, -1.853171e-002, -4.724036e-002, 8.929056e-002, -1.636989e-002, 1.987307e-002, 4.716698e-002, 8.354694e-003, 5.883644e-003, 7.900168e-003, -1.160534e-002, -5.450188e-004, -1.739163e-002, 1.215809e-002, -1.518132e-002, -1.554261e-002, -1.462997e-002, 1.287146e-003, -3.181389e-002, -3.549406e-002, -4.038911e-002, -5.103806e-002, -2.469706e-002, 2.379161e-002, 7.083568e-003, -8.985098e-002, -4.663639e-002, 3.177398e-002, -4.778813e-002, -9.981522e-004, 3.361289e-002, -1.205559e-003, 4.647452e-003, 3.806152e-002, -1.431499e-002, -2.844100e-002, -7.657328e-003, -2.994357e-002, -2.036328e-002, 7.401764e-003, -1.564553e-002, -1.766801e-002, -4.178313e-002, -2.987005e-002, -2.870746e-003, 4.656723e-003, 2.450799e-002, 2.438977e-002, -3.638458e-002, -9.988457e-002, -2.057860e-002, -2.720256e-002, -5.770246e-002, -2.237672e-002, 1.876317e-002, 2.465676e-003, -5.058477e-003, 2.043126e-002, 2.530834e-002, -2.249331e-002, -2.331386e-002, -5.580072e-002, -1.916853e-002, 2.635620e-002, -1.136183e-002, -2.979977e-002, -3.857447e-002, -1.876791e-002, 3.074199e-002, 4.966433e-002, 5.264367e-002, 2.368134e-002, -3.820107e-002, -4.352648e-002, -1.008183e-002, -1.585169e-002, -5.207797e-002, -5.686956e-002, -1.309644e-002, 3.895794e-003, -1.719607e-002, -3.229377e-002, 7.059786e-003, 7.579000e-003, -5.431565e-003, -4.096796e-002, -9.533320e-003, 4.406443e-002, 4.567978e-005, -1.962747e-002, -1.495256e-002, 2.227366e-002, 6.726766e-002, 8.198779e-002, 7.517887e-002, 4.106304e-002, -2.983388e-003, -4.451253e-003, 1.773300e-002, 6.627201e-003, -3.896446e-002, -7.789354e-002, -4.367520e-002, -5.571793e-003, -1.815784e-002, -4.441803e-002, -5.009727e-002, -1.726729e-002, 7.884113e-003, 9.279172e-004, -6.356132e-003, 4.663426e-002, 1.289207e-002, -9.992716e-003, 7.466093e-003, 4.179082e-002, 8.189347e-002,


© ISO/IEC 2004 — All rights reserved

Copyright International Organization for Standardization
Provided by IHS under license with ISO
No reproduction or networking permitted without license from IHS
Not for Resale

8.964248e-002, 5.916886e-002, 3.555798e-003, -5.760984e-003, 4.366456e-002, 4.414301e-003, 1.742519e-002, 2.081799e-002, -1.794997e-002, -4.843268e-002, -3.999989e-002, -4.639930e-003, -2.784396e-002, -3.500456e-002, -2.495293e-002, -2.320405e-002, 4.987968e-002, 2.753319e-003, 2.676354e-002, 1.865926e-002, -4.809035e-003, 1.310277e-002, 2.616217e-002, 3.369407e-002, 1.842214e-002, -2.757598e-002, -3.778910e-002, 3.535595e-002, 4.385559e-002, -2.746999e-002, 8.948645e-003, 4.164489e-002, 3.493918e-003, -5.755188e-002, -7.514345e-002, -2.229514e-002, -5.158653e-002, -1.728572e-002, 2.722664e-002, -2.064973e-002, 5.435374e-002, -9.270459e-003, -4.302118e-003, 1.305696e-002, -3.180996e-003, 1.111187e-002, 1.654911e-002, 2.476700e-003, -2.178203e-002, -4.710907e-002, -1.123383e-002, 4.921577e-002, 1.573785e-002, -1.114781e-002, 2.370464e-002, 2.601404e-002, -7.881433e-003, -2.569151e-002, 6.437909e-003, 6.865956e-002, 5.595922e-003, -2.084122e-003, 5.864645e-002, 2.718537e-002, 6.005792e-003, -2.522200e-002, -2.545379e-002, 2.328489e-003, -3.420678e-003, 1.126560e-002, 1.373474e-002, -1.851268e-002, -4.125274e-002, -3.586643e-002, 3.743236e-003, 1.079657e-002, -6.139864e-003, -1.789947e-002, -4.399035e-002, -1.203344e-002, 4.086698e-002, 4.087700e-002, -6.966105e-003, 2.612804e-002, 4.481118e-002, 3.472109e-002, 4.149641e-002, 3.837572e-002, -2.600784e-002, -1.264902e-003, 2.098050e-003, 5.855325e-003, -9.787162e-003, 1.137480e-002, 2.083991e-002, -1.860560e-002, -4.258651e-002, -2.815100e-002, -1.973663e-002, 2.610112e-003, 5.710459e-002, 6.233040e-002, -5.696724e-003, -2.791617e-002, 1.298822e-003, 2.305506e-002, -1.381978e-003, 5.169836e-003, 9.578061e-002, 1.261470e-001, 5.550473e-002, 1.644469e-002, -3.743660e-002, 4.071565e-002, 4.563024e-002, 1.464363e-002, -9.218924e-003, 3.621747e-003, 2.628107e-002, -9.622683e-003, -3.599340e-002, -2.802243e-002, 1.314882e-002, 1.005411e-001, 1.816139e-001, 1.968277e-001, 1.339196e-001, 6.400895e-002, 2.222961e-002, 4.554403e-002, 8.810680e-002, 1.295771e-001, 1.988542e-001, 2.052637e-001, 1.225987e-001, 4.856460e-002},
{1.654641e-002, -5.647883e-003, 2.700998e-002, 5.893565e-002, 4.187732e-002, 2.820974e-002, 4.963542e-003, -1.381816e-002, -2.949554e-002, -4.112265e-002, -3.882971e-002, -2.209856e-002, -5.249642e-003, -2.227610e-003, -1.511167e-002, -2.111951e-002, -6.466802e-003, 1.545556e-002, -1.661732e-003, -3.640566e-002, -3.483827e-002, 8.512543e-003, 7.592100e-002, 1.316180e-001, 5.543453e-003, -1.570677e-002, 1.112782e-002, 1.843852e-002, 4.934942e-004, -3.912235e-003, -1.027751e-002, -1.812526e-002, -3.558873e-002, -4.500910e-002, -3.999528e-002, -1.997461e-002, -1.304387e-002, -2.621990e-002, -4.119581e-002, -4.183191e-002, -1.752512e-002, 5.894295e-003, -1.384730e-002, -6.904329e-002, -7.966787e-002, -3.410236e-002, 5.037930e-002, 1.144033e-001, -2.097224e-003, -1.440805e-002, -8.687974e-003, -1.540647e-002, -1.575934e-002, 2.010560e-002, 2.376975e-002, -6.456399e-003, -3.070215e-002, -2.359279e-002, 5.802296e-003, 2.425717e-002, 1.110560e-002, -3.669005e-002, -5.941014e-002, -4.501900e-002, -7.637271e-003, 2.685763e-002, 1.008952e-002, -6.032398e-002, -7.441559e-002, -4.236992e-002, 1.229899e-002, 4.974889e-002, -8.612151e-003, 1.241516e-002, 3.181464e-003, -4.745902e-003, 5.898734e-003, 4.348335e-002, 9.337655e-003, -5.101358e-002, -5.691822e-002, -2.877643e-002, 1.446948e-002, 5.370681e-002, 6.080910e-002, 2.211609e-002, -3.814478e-002, -4.051718e-002, 4.736824e-003, 4.996144e-002, 3.480487e-002, -2.283224e-002, -2.191892e-002, 1.060697e-002, 2.087200e-002, 1.383129e-002, -1.871421e-003, 4.343248e-002, 6.908709e-003, 1.336940e-002, -6.466283e-003, -1.010401e-002, -5.322605e-002, -3.791240e-002, -1.042924e-002, -7.001850e-003, -1.510158e-002, -1.149780e-002, -1.072324e-002, -1.075867e-002, -5.404931e-002, -7.251088e-002, -5.021932e-002, -1.795016e-002, -3.519583e-002, -6.308141e-002, -4.717938e-002, -2.177902e-002, -9.455086e-003, -5.653191e-003, -1.579341e-002, 2.130254e-002, -1.477027e-002, -1.203179e-002, -2.692373e-002, -3.133150e-002, -4.231554e-002, 1.959417e-002, 4.922045e-002, 2.485982e-002, -3.363676e-002, -3.948391e-002, -9.924310e-003, 1.720376e-002, -1.124932e-002, -7.341159e-002, -7.255879e-002, -6.930986e-002, -8.819680e-002, -7.861489e-002, -1.581373e-002, 3.565752e-002, 6.024186e-002, 4.422268e-002, -2.660417e-002, -3.506275e-002, -3.272637e-002, 1.429192e-003, 1.546463e-002, 4.384542e-002, 3.759825e-002, 7.858584e-002, 6.991527e-002, 4.236065e-002, -3.707367e-002, -6.495567e-002, -1.402194e-002, 4.195588e-002, 3.874865e-002, -4.914123e-002, -8.822444e-002, -8.911409e-002, -7.893155e-002, -1.547653e-002, 3.829342e-002, 7.575624e-002, 3.480991e-002, -7.336809e-004, 3.641998e-002, -2.965507e-002, 5.120323e-003, 2.100922e-002, 2.298865e-002, 4.532582e-002, 4.688884e-002, 1.562290e-002, -6.680116e-002, 3.826839e-002, 6.774722e-002, 9.430326e-002, 3.863847e-002, -1.840032e-002, -9.714199e-003, -7.915431e-002, -1.394161e-001, -1.176830e-001, -8.084562e-002, -1.087445e-002, -1.391306e-002, -2.392507e-002, -6.757162e-002, 4.393874e-003, 6.419708e-002, -1.628458e-002, -2.203011e-003, -1.895204e-002, -3.983795e-002, -2.831070e-002, 7.524363e-003, 6.136946e-002, -4.387281e-002, 1.131703e-002, 9.019988e-002, 9.671993e-002, 4.251649e-003, -1.000864e-001, -2.661085e-002, -3.552144e-002, -4.856083e-002, -2.083829e-002, -3.424767e-002, -3.841673e-002, -8.660269e-002, -1.059012e-001, -9.811224e-002, -1.329729e-002, 1.407227e-002, -3.239882e-002, -2.510135e-002, -3.504430e-002, -3.821643e-002, -7.623043e-002, -8.504307e-002, -3.735495e-002, 1.985653e-002, 5.043843e-002, 4.471026e-002, -2.422250e-002, -1.319729e-001, -1.400761e-001, -2.413537e-003, -1.092220e-002, 5.556064e-002, 8.073423e-002, 1.501402e-002, -1.380334e-002, -5.968802e-002, -6.561395e-002, 2.951933e-002, 1.160704e-001, -3.046531e-002, -4.020776e-003, 1.345606e-002, -4.450723e-003, 2.006454e-002, -2.765610e-002, -5.086549e-002, 6.321944e-003,

© ISO/IEC 2004 — All rights reserved


Copyright International Organization for Standardization
Provided by IHS under license with ISO
No reproduction or networking permitted without license from IHS
Not for Resale

8.914839e-002, 1.353410e-001, 1.082550e-001, 2.873877e-002, -5.998453e-002, -2.882444e-002, 4.928071e-002, -5.985448e-003, 7.103352e-002, 8.189438e-002, 2.357510e-002, 8.390551e-004, -2.396469e-003, -1.783033e-002, 7.232675e-002, 1.594841e-001, -6.157810e-002, 1.860526e-002, 1.414512e-002, 6.878327e-003, 4.106759e-002, 1.118397e-002, -1.354890e-002, 3.822048e-002, 1.223769e-001, 1.514221e-001, 1.188698e-001, 7.026008e-002, 4.557998e-002, 7.679894e-002, 3.826772e-003, -7.968529e-003, 5.713788e-002, 5.697839e-002, 1.103662e-002, -7.874045e-003, 7.263647e-003, 1.168645e-002, 6.359426e-002, 1.326948e-001, -4.353133e-002, 2.861445e-002, -3.592377e-003, -8.963916e-003, 2.890095e-002, -1.218948e-003, -2.471904e-002, 2.112339e-002, 8.774061e-002, 1.071201e-001, 8.803438e-002, 7.420051e-002, 7.066254e-002, 4.794735e-002, -3.904349e-002, -7.059689e-003, 3.600152e-002, 3.303843e-002, -8.835839e-003, -9.995172e-003, 1.292538e-002, -9.248840e-003, 2.823874e-002, 8.364918e-002, 4.538754e-003, 2.787457e-002, -1.587422e-002, -1.681582e-002, -1.307772e-002, -2.304460e-002, -4.796507e-002, -3.053658e-002, -4.603143e-003, 4.756641e-003, -5.911865e-004, -6.346398e-003, 1.065049e-003, 9.143111e-004, -1.599641e-002, 1.766452e-003, 1.795596e-002, 1.685746e-002, -1.712481e-002, 1.375660e-003, 1.874358e-002, 1.089820e-002, -9.316131e-003, 2.558060e-002, 2.146884e-002, 8.398110e-003, -3.045477e-002, -1.427628e-002, -3.198089e-002, -4.707474e-002, -4.773610e-002, -3.689310e-002, -2.657350e-002, -3.064634e-002, -5.012025e-002, -5.948552e-002, -1.929516e-003, 6.094567e-002, 4.477500e-002, 3.106643e-002, -3.860449e-003, -1.191482e-002, -1.537674e-002, 2.654856e-002, 4.083858e-002, -4.053277e-003, 1.525314e-002, 3.860548e-002, 1.145959e-002, -6.690536e-004, -2.047705e-002, -5.150805e-003, -1.871773e-002, -4.371278e-002, -4.008846e-002, -3.209759e-002, -3.624664e-002, -6.299376e-002, -9.353078e-002, -7.118906e-002, 3.638011e-002, 8.003096e-002, 2.347009e-002, -2.307010e-003, -4.968703e-002, -4.187404e-002, -2.545540e-002, 1.014291e-002, 4.565618e-002, -2.610924e-002, -2.930674e-002, 2.908211e-002, -1.116290e-002, -8.985876e-003, -3.639255e-003, 1.850673e-002, 1.431882e-002, -1.407458e-004, 1.133141e-002, 1.745124e-002, -2.459993e-003, -4.248052e-002, -6.534409e-002, -3.057560e-002, 2.602198e-002, -1.276689e-002, -3.760591e-002, -1.225757e-002, -3.861102e-002, 9.313787e-003, 2.799320e-002, 5.022523e-003, 1.969097e-002, -1.766756e-002, -4.612399e-002, 1.967233e-002, -3.034134e-002, -2.433753e-003, 5.393921e-003, 3.667086e-002, 3.569832e-002, 3.129936e-002, 6.365934e-002, 8.425884e-002, 6.304060e-002, 2.140121e-002, -1.471337e-002, -1.076506e-004, 1.464934e-002, -4.099710e-002, -1.355444e-002, 4.373013e-002, -1.612142e-002, -3.131427e-003, 4.109375e-002, 3.725654e-002, 1.269618e-002, -4.172948e-002, -5.216108e-002, 3.168893e-002, -4.237299e-002, 1.166118e-002, 7.648857e-003, 3.272274e-002, 3.252220e-002, 2.902927e-002, 6.364396e-002, 9.275084e-002, 7.187065e-002, 2.385831e-002, -7.138162e-003, 1.736056e-002, 5.512462e-002, 3.000344e-002, -2.250513e-002, -9.973058e-003, -1.378549e-003, 1.412545e-002, 1.290998e-002, -1.889968e-002, -2.351668e-002, -5.387221e-002, -3.821271e-002, 3.692348e-002, 1.138973e-002, 3.550443e-002, -1.684561e-003, 1.353879e-002, 1.777794e-002, 1.281817e-002, 3.622590e-002, 6.357122e-002, 4.229415e-002, -1.005277e-003, -8.726033e-003, 2.672446e-002, 5.276667e-002, 1.641880e-002, -4.426738e-002, -6.288455e-003, 4.311979e-002, 3.542456e-002, -3.613828e-003, -3.579176e-002, -3.496061e-002, -1.212046e-002, 3.557006e-002, 7.311952e-002, 7.957354e-002, 5.930946e-002, -9.684248e-003, -9.160341e-003, -8.871707e-003, -1.583012e-002, 3.126510e-004, 2.099880e-002, 7.092271e-003, -2.373124e-002, -9.364488e-003, 2.223820e-002, 1.615076e-002, -3.330286e-002, -5.979637e-002, -2.928992e-002, -1.692041e-002, -2.119375e-002, -3.780889e-002, -2.970405e-002, -1.318355e-002, 2.932536e-002, 8.544364e-002, 1.210964e-001},
{1.673882e-002, 1.795477e-002, 2.625844e-002, 7.321862e-002, 8.528344e-002, 1.099406e-001, 1.472695e-001, 1.400646e-001, 1.008121e-001, 5.700507e-002, -9.071632e-004, -2.095594e-002, -7.258669e-003, -1.345170e-002, -5.377349e-002, -1.233843e-001, -1.699308e-001, -1.713772e-001, -1.432758e-001, -7.260616e-002, -2.409546e-002, -3.361215e-002, -6.992312e-002, -6.800244e-002, 1.877742e-002, 9.276626e-003, -9.473446e-003, 3.692744e-002, 1.398453e-002, 3.565831e-002, 7.848879e-002, 5.993324e-002, 8.503292e-003, -3.136538e-002, -5.307621e-002, -3.487720e-002, 2.854641e-002, 6.354285e-002, 5.116260e-002, -1.517161e-002, -8.617450e-002, -1.109270e-001, -8.135708e-002, -1.371065e-002, 3.856324e-002, 3.040402e-002, -1.177658e-002, -1.847408e-002, 1.699599e-002, 5.186016e-003, -3.789270e-002, -1.255244e-002, -4.826631e-002, 1.556146e-004, 5.640484e-002, 2.986631e-002, 4.255978e-003, -1.565016e-002, -1.581768e-002, -2.296063e-002, 5.461013e-003, 6.498112e-002, 1.154325e-001, 9.705004e-002, 2.824405e-002, -2.016234e-002, -9.124792e-003, 2.457934e-002, 3.324341e-002, 2.402098e-002, 2.444931e-002, 4.776546e-002, -2.872106e-003, -3.166110e-003, -3.998687e-002, -1.442770e-002, -2.955684e-002, 8.188227e-003, 1.209537e-003, -3.309298e-002, -7.439002e-003, 3.070643e-002, 4.635650e-002, 7.482296e-003, -6.332260e-002, -6.347913e-002, 2.257616e-002, 9.195957e-002, 8.753959e-002, 5.575895e-002, 3.245159e-002, 2.018048e-002, -4.401916e-002, -7.125325e-002, -5.084156e-002, -2.778332e-002, -4.022415e-002, 4.984596e-003, 2.296102e-003, 9.994779e-003, -4.480198e-002, -1.728737e-002, -2.433537e-002, -4.211729e-002, -3.529957e-002, -1.917617e-002, 3.796943e-003, 1.031574e-002, 1.752944e-003, -8.595294e-003, 6.139244e-004, 3.877381e-002, 7.303112e-002, 8.242014e-002, 5.419682e-002, 5.240644e-002, 3.272829e-002, 8.806439e-003, -5.443429e-002, -9.654867e-002, -5.732748e-002, -1.889174e-003, 2.268391e-002, -6.869168e-003, -1.718166e-002, 4.836459e-003, 8.160762e-003, 2.037432e-002,


© ISO/IEC 2004 — All rights reserved

Copyright International Organization for Standardization
Provided by IHS under license with ISO
No reproduction or networking permitted without license from IHS
Not for Resale

1.261609e-002, 7.986743e-003, -1.677899e-002, -4.466459e-002, 5.010160e-003, 9.133711e-002, 9.643371e-002, 1.283957e-002, 1.589806e-002, 4.392629e-002, 2.038805e-002, 6.754405e-002, 1.128597e-001, 5.006024e-002, -5.258481e-002, -9.169554e-002, -4.566176e-004, -8.890070e-003, 8.692603e-003, -2.072658e-002, 2.994775e-003, -1.620220e-002, 3.954516e-003, 3.001270e-002, 3.251465e-003, 6.571686e-003, 1.968341e-002, -5.470360e-002, -1.250512e-001, -1.636463e-002, 1.018460e-001, -4.082139e-002, -9.404916e-003, 6.265487e-002, -2.311469e-002, -2.536919e-002, 3.298950e-002, -1.815007e-002, -4.025747e-002, -2.210193e-002, 5.248378e-002, 7.732216e-003, 4.233971e-003, 2.814653e-002, 1.613564e-002, -3.282689e-002, -1.152290e-002, 6.952153e-002, -1.305642e-002, -2.467241e-002, 4.984902e-002, 1.389523e-001, -2.755159e-002, -4.548683e-002, 5.519351e-002, -7.521517e-002, -2.830372e-002, 9.336635e-002, -4.016967e-003, -5.289559e-002, 3.180612e-002, 2.479621e-002, 5.416232e-002, 9.515415e-002, 1.582660e-002, -1.006095e-002, 2.355919e-002, 4.657994e-002, 2.241203e-002, -2.647993e-002, -3.256913e-002, 2.103767e-002, 3.084399e-002, -2.717053e-002, -6.359411e-003, 4.445115e-002, -2.942754e-002, -8.938705e-002, 8.073811e-003, -8.741298e-002, -8.710420e-002, 6.230061e-003, -4.115984e-003, -3.722071e-002, -4.504597e-003, -2.402376e-002, -1.899010e-002, 1.174203e-001, -2.462093e-002, -1.484759e-003, 2.582856e-002, 1.642070e-002, 2.981438e-002, 6.626612e-002, 4.796864e-002, -7.769971e-003, -1.142312e-002, 4.012936e-002, 4.596366e-002, -1.501753e-002, -7.134064e-002, -1.113946e-001, -1.405538e-002, -2.798361e-002, -7.776511e-002, -3.131167e-002, -5.395712e-003, -3.793022e-002, -8.067517e-002, -7.206409e-002, -5.774928e-002, -2.161994e-002, -3.458355e-002, 1.449854e-002, 1.121308e-002, -4.689410e-003, 1.347529e-002, 5.279318e-002, 2.856229e-002, -2.008226e-002, 1.120644e-002, 7.674061e-002, 9.920602e-002, 6.541311e-002, -1.910839e-002, -6.737763e-002, 2.670346e-002, 1.033145e-002, -6.212110e-002, -2.836697e-002, -1.488468e-002, -3.955345e-003, -5.669372e-002, -3.977917e-002, 2.220613e-002, 6.071762e-002, -2.410219e-002, 2.386502e-002, 3.040713e-003, -1.742137e-002, 3.791259e-004, 1.188833e-002, -2.599615e-002, -5.259778e-002, -5.525468e-003, 5.722211e-002, 8.107759e-002, 6.253536e-002, 1.243763e-002, -1.980350e-002, 1.919090e-002, -1.008426e-002, -5.841104e-002, -2.640492e-002, -2.861338e-002, 2.298616e-003, -2.191971e-002, -1.414733e-003, 8.267176e-002, 1.133487e-001, 5.179819e-003, 1.510727e-002, -5.876080e-003, -3.687015e-002, -2.572447e-002, -1.565779e-002, -4.709680e-002, -7.822989e-002, -4.438496e-002, 1.021058e-002, 4.553492e-002, 4.881154e-002, 1.530304e-003, -3.539458e-002, -9.521943e-003, -2.309002e-002, -4.871378e-002, -2.054643e-002, -1.463362e-002, -4.598668e-003, -1.886269e-003, -2.288712e-002, 5.104113e-002, 1.077424e-001, 7.674625e-003, -1.094891e-002, -2.046114e-002, -3.286387e-002, -6.153374e-002, -4.677011e-002, -5.387803e-002, -6.416360e-002, -3.069787e-002, 1.166387e-002, 3.248820e-002, 9.134435e-003, -3.454545e-002, -3.064469e-002, -5.981917e-003, -9.225405e-003, -3.712655e-002, 7.492699e-003, 2.812970e-002, 6.262932e-003, -1.316150e-002, -3.131780e-003, 1.608640e-002, 5.523041e-002, 7.566117e-003, -1.984675e-002, -2.783533e-002, -1.335730e-002, -4.189054e-002, -4.979965e-002, -5.067825e-002, -4.343077e-002, -1.838197e-002, -8.086007e-004, -1.232774e-002, -2.166009e-002, -2.521950e-003, 1.290187e-002, 1.169126e-002, -2.673380e-003, -1.918792e-002, 3.720976e-002, 4.914597e-002, 1.633489e-002, -1.367686e-002, -1.481190e-003, 3.101305e-002, 4.628071e-002, 6.772381e-003, -4.562278e-003, -2.121083e-002, 1.090051e-003, -1.601354e-002, -1.913289e-002, -2.237962e-002, -2.195056e-002, -1.997635e-002, -1.940664e-002, -2.097645e-002, 8.915610e-003, 4.241108e-002, 2.476477e-002, 1.979106e-002, -3.412509e-003, 1.932190e-002, 6.508088e-002, 1.949740e-002, -6.749685e-003, 1.735631e-002, 4.300496e-003, 3.324048e-002, 3.191839e-002, -1.891052e-002, 1.460499e-002, -1.961072e-002, 1.480402e-002, 5.706144e-003, -4.664823e-003, 2.140527e-003, 1.889537e-003, -2.633492e-003, -5.282387e-003, 6.507374e-003, 4.447020e-002, 5.365375e-002, 3.443780e-004, 7.380560e-003, 2.517621e-002, 3.832732e-002, 4.305156e-002, -3.177437e-002, -4.967263e-002, 3.439437e-002, 1.823277e-002, 4.555203e-002, 5.407672e-002, -4.346049e-002, 1.818845e-002, -1.802564e-002, 2.388411e-002, 2.226557e-002, 3.464679e-003, 9.488442e-003, 1.564807e-002, 7.729619e-003, 7.111624e-003, 2.770808e-002, 5.655973e-002, 2.240557e-002, -5.055898e-002, 4.206939e-002, 6.471858e-002, -2.279066e-002, -1.890485e-002, 6.188358e-004, -7.178619e-003, -1.299515e-002, 1.755360e-002, 5.372521e-002, 7.292619e-002, -2.728642e-002, 3.118401e-002, -1.560120e-002, 1.673008e-002, 2.859000e-002, 8.629200e-003, 1.104188e-002, 1.471276e-002, 1.157515e-002, 1.585865e-002, 3.017070e-002, 4.564403e-002, 2.413115e-002, -7.786516e-002, -4.576133e-002, 2.096226e-002, 2.301362e-003, -1.438468e-003, -1.687944e-002, -3.224970e-002, 6.468836e-003, 4.717378e-002, 4.615974e-002, 5.718999e-002, -6.294658e-003, 2.517223e-002, -1.748891e-002, 6.426563e-003, 2.825060e-002, 1.427147e-002, 4.929209e-003, 9.087259e-003, 6.322985e-003, -1.126157e-002, -2.834009e-002, -6.030652e-003, -2.689410e-003, -1.865480e-002, 6.747011e-003, 1.972663e-002, 2.457636e-002, 2.739742e-002, 9.767581e-003, -1.543977e-002, 1.869974e-002, 2.795090e-002, -1.191995e-002, -1.101829e-002, 9.758651e-003, 1.769419e-002, -1.755929e-002, -1.308207e-002, 1.645527e-002, 1.560599e-002, 1.838965e-003, -2.691166e-003, -2.135123e-002, -7.327871e-002, -1.079873e-001, -1.045508e-001, -9.114030e-002, -5.778451e-002, -1.248184e-002, -2.269964e-002, -2.573718e-002, 1.090738e-002, 1.809338e-002, 8.299435e-007, -3.367844e-002, -8.106458e-002, -1.215726e-001, -1.166890e-001},

© ISO/IEC 2004 — All rights reserved


Copyright International Organization for Standardization
Provided by IHS under license with ISO
No reproduction or networking permitted without license from IHS
Not for Resale

{4.790247e-002, -1.287494e-002, -2.540733e-002, 1.844052e-003, -3.870214e-002, -8.584850e-002, -8.776176e-002, -8.434068e-002, -9.990465e-002, -1.112129e-001, -9.800883e-002, -6.626545e-002, -8.631018e-003, 2.510485e-002, 2.301983e-002, -8.976202e-003, -3.861834e-002, -4.564160e-002, -1.387310e-002, 6.881070e-002, 1.414929e-001, 1.613064e-001, 1.545317e-001, 1.506202e-001, 4.264476e-002, -1.008845e-002, -1.322453e-002, 2.919757e-002, 1.713575e-003, -1.035766e-002, 1.220174e-002, 1.600390e-002, 4.301601e-004, -6.049749e-003, 2.233976e-003, 2.253739e-002, 6.410825e-002, 8.148373e-002, 5.698629e-002, -1.399935e-003, -6.616841e-002, -9.948653e-002, -7.666231e-002, 1.010405e-003, 7.666333e-002, 7.577146e-002, 4.561421e-002, 5.661162e-002, 4.048169e-002, 6.305985e-003, 9.471105e-003, 4.246534e-002, 2.315814e-002, 5.115414e-003, 3.343202e-003, -1.648248e-002, -3.555595e-002, -2.300730e-002, -9.091898e-003, 1.376669e-002, 5.629686e-002, 9.118597e-002, 8.293203e-002, 2.816652e-002, -5.531708e-002, -1.085130e-001, -8.209085e-002, -1.189718e-002, 3.639538e-002, 3.114601e-002, 1.438459e-002, 1.648421e-002, 2.423995e-002, 1.725440e-002, 2.946410e-002, 3.328093e-002, 7.634665e-003, -2.268691e-003, -1.742148e-002, -4.864633e-002, -3.712948e-002, 1.049846e-002, 4.076232e-002, 2.947061e-002, -1.036476e-002, -1.072533e-002, 3.189387e-002, 3.097789e-002, -1.848400e-002, -5.093020e-002, -1.558153e-002, 3.950920e-002, 2.789257e-002, -7.312576e-003, -9.716452e-003, 9.843900e-003, -6.884217e-003, 1.306344e-002, 2.173512e-002, -1.203142e-002, 3.979317e-003, 6.956571e-002, 6.400899e-002, 2.009346e-002, 1.115798e-002, 1.719867e-002, 2.442232e-002, 1.952839e-002, -9.623597e-003, -2.013284e-002, -1.079508e-002, -1.605214e-002, -5.522394e-002, -5.555910e-002, -9.155812e-003, 2.914815e-002, -3.373696e-002, -8.263351e-002, -6.228939e-002, -1.801430e-002, -2.000743e-002, -4.795109e-003, 1.215234e-002, -4.393464e-002, 9.462421e-003, 6.650029e-002, 6.241454e-002, 3.462270e-002, -1.067061e-003, -4.066356e-002, -6.284791e-002, -6.998580e-002, -4.109201e-002, 2.312638e-002, 8.556952e-002, 2.905340e-002, -4.914685e-002, -3.412716e-002, 3.301467e-003, 2.428245e-002, -1.142989e-002, -1.808759e-002, -3.385816e-002, -7.079690e-002, 7.643533e-003, -1.269966e-002, 8.125265e-003, -2.813111e-002, -1.040866e-002, 3.151120e-002, 6.143477e-002, 4.085549e-002, -3.019910e-002, -6.369426e-002, -2.789040e-002, -1.566955e-002, -1.450373e-002, 3.312588e-002, 9.766625e-002, 5.263430e-002, -7.745412e-005, 1.812932e-002, 3.925399e-003, -9.111854e-003, 1.685071e-002, 6.567342e-003, -7.089152e-002, -2.029682e-001, -1.455134e-002, -4.895221e-002, 2.332524e-002, 2.935943e-002, 9.890172e-004, -5.211669e-002, -5.132523e-002, 1.163636e-002, 9.849438e-003, -4.271160e-002, -1.437962e-002, 3.369228e-003, 4.187599e-002, 1.858215e-002, 1.972713e-002, -2.181342e-002, -2.535691e-002, 1.685612e-002, -1.926131e-004, -2.594199e-002, 1.039153e-002, 5.212606e-002, 1.723311e-001, 7.737193e-003, -2.893997e-002, -4.033002e-002, 6.291869e-003, 2.361572e-002, -1.413132e-002, -1.556724e-001, -1.242800e-001, 3.154933e-002, 1.051036e-002, -2.757905e-002, -5.046975e-002, -1.256296e-001, -1.441540e-001, -1.230668e-001, -6.733696e-002, -7.439013e-003, -1.319387e-002, 3.860137e-003, 1.708879e-002, 3.664111e-002, -9.051141e-003, -6.685999e-002, -1.768163e-002, -5.321557e-002, 6.649710e-003, 9.808186e-003, -3.500905e-003, -1.133050e-002, 1.842002e-002, -2.222641e-002, -9.590716e-003, -1.781222e-003, -1.509297e-002, -2.755673e-003, 1.666172e-002, -6.073343e-003, -5.130521e-002, -9.551179e-002, -2.073389e-002, 5.592276e-002, -8.289316e-003, 5.690806e-004, 2.632074e-002, 7.449252e-002, 1.914277e-002, -4.279026e-002, -5.454001e-002, -7.300408e-002, 2.777605e-002, 2.825847e-002, -7.298301e-003, -3.886619e-002, 1.161547e-002, 1.123537e-002, 9.566593e-003, 7.710495e-003, 4.661590e-002, 1.021508e-001, 1.331954e-001, 1.312238e-001, 5.567175e-002, -3.532074e-002, 4.410903e-002, 5.325535e-002, -9.865527e-003, 2.145395e-002, 2.501501e-002, 7.623199e-002, 5.028502e-002, 1.801382e-002, 4.344300e-002, 5.395511e-002, 3.205598e-002, 1.196484e-002, 7.109701e-003, -2.468916e-002, -2.154291e-003, 5.663395e-003, -1.027086e-002, -4.389130e-003, 4.812571e-002, 1.046496e-001, 1.344806e-001, 1.156616e-001, 2.291015e-002, -8.226631e-003, 3.655384e-002, -7.115029e-003, -2.986102e-002, 1.962821e-002, 9.192952e-003, 2.323324e-002, 7.365814e-003, 4.643824e-003, 4.865682e-002, 7.410900e-002, 2.041572e-002, -5.929619e-003, 3.699008e-003, 3.990816e-004, -7.568778e-003, -9.824392e-003, -3.939893e-002, -5.375285e-002, -2.168812e-002, 2.801126e-002, 5.262365e-002, 3.815144e-002, -1.671860e-003, 3.730073e-003, -1.847138e-002, -5.461199e-002, -5.143986e-002, -1.066352e-002, -6.084158e-003, -3.400916e-002, -5.239089e-002, -5.365514e-002, -1.431758e-002, 1.564030e-002, -5.505777e-003, -2.599786e-002, 1.424368e-003, 1.011355e-002, -5.899266e-003, -1.222090e-002, -5.024587e-002, -6.998382e-002, -5.119582e-002, -1.355049e-002, 2.255782e-002, 1.906978e-002, -8.690383e-003, -4.118729e-002, -6.203880e-002, -6.402055e-002, -7.317712e-002, -4.456639e-002, -1.685239e-002, -5.376577e-002, -1.179088e-001, -7.042234e-002, -4.429913e-002, -1.999270e-002, 1.347098e-002, -2.358845e-002, -1.413969e-003, 9.845299e-003, -1.018544e-003, 1.231081e-002, -9.924937e-003, -1.092568e-002, 7.668264e-003, 3.855394e-002, 4.162181e-002, 2.200583e-002, -2.030157e-002, -3.561758e-002, -2.492331e-002, -2.318789e-002, -5.744626e-002, -4.960687e-002, -2.178811e-002, -1.652823e-002, -1.028587e-001, -8.920598e-002, 1.061915e-002, 1.855207e-002, 3.662989e-002, 1.087209e-002, 8.255904e-003, 1.997109e-003, -2.081127e-002, 1.247414e-002, 1.781084e-002, 2.295459e-002, 3.883321e-002, 2.856728e-002, -3.177072e-003, -7.280276e-003, -5.808379e-003, 2.548860e-002, 4.695119e-002, 1.950516e-002, 1.737454e-003, -8.946189e-003, -3.012694e-002, 2.533250e-002, 8.653320e-003, -6.455855e-002, 5.596665e-003, 4.729110e-002,


© ISO/IEC 2004 — All rights reserved

Copyright International Organization for Standardization
Provided by IHS under license with ISO
No reproduction or networking permitted without license from IHS
Not for Resale

9.086357e-003, 1.458480e-002, 6.698306e-003, 6.852914e-003, -3.249356e-002, -1.634028e-002, -7.465572e-003, -8.853130e-003, -1.755002e-002, -4.257077e-002, -3.744494e-002, 2.855398e-003, 1.484962e-002, 1.463512e-002, -2.962404e-002, -3.876029e-002, 3.362211e-002, 3.511672e-002, -5.541267e-002, -4.840601e-002, 9.400492e-003, -2.514490e-003, -3.492285e-003, 1.405488e-002, -2.192039e-002, -7.692012e-003, -3.966991e-003, 1.307762e-002, -2.836076e-002, -1.617507e-002, -8.706475e-003, -2.546723e-002, -5.050922e-002, -5.103525e-002, -7.803451e-003, 2.272695e-002, -1.075359e-003, -9.132665e-003, 4.665135e-002, 5.068846e-002, 5.168841e-004, -6.937213e-003, 1.154256e-002, 2.082689e-003, -5.370937e-002, -4.713424e-004, 1.407676e-002, -5.215249e-003, -3.581455e-002, -1.937605e-002, -1.366083e-002, 1.187480e-002, -1.458976e-002, -3.980192e-003, 1.068423e-002, -8.337447e-003, -3.147915e-002, -1.341845e-002, 1.307074e-002, -9.637074e-003, -3.423599e-002, -3.448331e-002, 3.099342e-002, 6.169596e-002, 2.397725e-002, -7.582521e-003, 3.435784e-002, 9.244971e-003, -6.539518e-002, -1.702232e-002, 2.139666e-002, -3.844744e-003, -5.965665e-003, -3.531456e-003, -2.451371e-002, -8.009602e-004, 2.244321e-003, 2.179606e-002, 4.783079e-002, 2.662241e-002, 1.799668e-003, 1.896137e-002, 1.865195e-003, -3.768087e-002, -5.412031e-002, -3.603144e-002, -3.944442e-003, 2.716324e-002, 4.426921e-002, 1.467054e-002, 1.672332e-002, -1.849716e-002, -4.431999e-002, -1.254341e-002, 1.050730e-002, 3.091216e-003, -3.535274e-003, 8.818442e-003, -2.622170e-002, -2.270090e-002, 7.362370e-003, 4.195165e-002, 7.257618e-002, 6.171996e-002, 3.819805e-002, 3.359883e-002, 1.086037e-002, -2.275596e-003, 2.899740e-003, 3.622621e-002, 7.165720e-002, 8.343596e-002, 6.020038e-002, 7.238074e-003, 2.494893e-002, 5.219212e-002, 4.684230e-002, 2.969042e-002, 1.191472e-002, 1.106085e-002},
{-2.806166e-002, 2.098393e-002, 2.810111e-002, -1.865405e-002, 2.885510e-003, -8.312194e-003, -7.358088e-002, -1.148665e-001, -8.927421e-002, -4.680464e-002, -9.112956e-003, -8.773993e-003, -2.670586e-002, -4.570457e-002, -5.450209e-002, -4.563249e-002, -3.136917e-002, -2.677075e-002, -3.718114e-002, -4.990693e-002, -4.741003e-002, -2.597900e-002, 4.250303e-003, 1.084026e-002, -1.452570e-003, 1.715348e-002, -2.539036e-003, -2.843799e-002, 4.040027e-003, 1.118489e-002, -3.025028e-002, -5.730029e-002, -3.664974e-002, -1.185807e-002, 2.730852e-002, 6.408335e-002, 6.438000e-002, 3.864380e-002, 1.685151e-002, 2.052268e-002, 3.088528e-002, 3.327335e-002, 1.134889e-002, -1.205275e-003, 2.279778e-002, 6.904244e-002, 7.760579e-002, 4.349822e-002, 1.482431e-002, -7.718233e-003, -2.385869e-002, -9.713709e-003, 3.914673e-002, 6.606305e-002, 1.304416e-002, -1.829234e-002, -3.632534e-002, -5.784094e-002, -4.409855e-002, 1.624954e-002, 5.567691e-002, 5.795207e-002, 4.874714e-002, 4.266523e-002, 4.844113e-002, 4.591136e-002, 9.267536e-003, 1.404216e-002, 6.020039e-002, 7.100527e-002, -2.353157e-002, -1.415634e-001, 1.604249e-002, -2.169754e-002, -1.104966e-002, 2.386842e-002, 2.113149e-002, 7.507913e-003, -4.681534e-002, -6.824342e-002, -6.129833e-002, -4.085216e-002, -1.402688e-002, 4.469841e-002, 8.620436e-002, 7.271109e-002, 2.965534e-002, 2.630426e-003, 5.818702e-003, -5.046033e-003, -3.534303e-002, 2.465056e-002, 1.512973e-001, 1.648924e-001, 3.640307e-002, -1.228169e-001, 2.005167e-002, -3.307297e-003, 2.964986e-002, 2.978665e-002, -3.712002e-002, -9.203548e-003, -5.763358e-002, -1.065374e-001, -9.103083e-002, -2.298473e-002, 2.126202e-002, 3.577102e-002, 6.275876e-002, 7.000158e-002, 3.734519e-002, 4.345577e-003, 1.136728e-002, -1.955531e-002, -4.585351e-002, 3.706072e-002, 1.175495e-001, 5.792089e-002, -1.265975e-002, -1.954055e-002, 1.058643e-002, 2.791909e-002, 4.197117e-002, 3.709227e-002, -9.724034e-003, 4.988357e-002, -2.559493e-002, -6.558756e-002, -2.913919e-002, 2.925339e-002, 5.803003e-002, 1.641417e-002, -3.843439e-002, -4.299036e-002, -1.058949e-002, 4.324182e-002, 5.448774e-002, 5.522427e-003, -3.851481e-003, 2.673501e-002, -5.023490e-002, -1.128201e-001, -2.873888e-002, 1.125129e-001, -1.923649e-002, 7.606902e-003, -1.791403e-002, -1.396213e-003, -1.582777e-002, 1.739989e-002, -4.500210e-002, 5.494832e-004, 4.655640e-002, 6.076108e-002, 5.083723e-002, -2.447465e-002, -1.045984e-001, -1.041996e-001, -7.573398e-002, -1.482067e-002, -4.333529e-002, -7.734296e-002, 8.275203e-003, 3.025811e-002, -8.090648e-002, -1.419773e-001, -3.740686e-002, 1.328140e-001, -2.287040e-002, -5.454067e-002, -1.009454e-001, -4.065425e-002, -3.895848e-002, -1.320195e-002, 2.239416e-002, 8.484101e-002, -6.160386e-002, -4.688820e-002, 6.427846e-002, 3.245525e-002, -4.881449e-002, -2.794173e-002, -3.039764e-002, 8.337103e-003, -6.543527e-002, -8.599694e-002, 2.816567e-002, 4.809498e-002, 1.179237e-003, -4.606290e-002, -5.776441e-002, 3.484367e-002, 1.687302e-002, 1.159225e-002, -1.865386e-003, 1.966156e-002, 2.231470e-004, 2.077897e-002, 3.698984e-002, 1.877643e-002, -2.871182e-002, 2.873964e-002, 8.068207e-002, -2.546707e-002, 5.098480e-002, 5.747804e-002, -8.647968e-003, 2.233689e-002, -5.091486e-002, -7.421175e-002, -1.293413e-002, -2.257563e-002, 2.593896e-002, 7.703427e-002, -3.573289e-002, 3.878233e-002, 1.654445e-002, 1.983440e-002, 6.033302e-003, 1.043508e-002, 5.618683e-003, 1.534731e-002, 3.811104e-002, 8.938021e-002, 1.155492e-001, 6.778848e-002, -4.547216e-002, -1.059414e-001, -4.357215e-002, 1.178601e-002, -2.662630e-002, 1.398353e-002, -1.595668e-002, -1.923316e-002, 1.359435e-003, -1.706529e-002, -5.103195e-002, 2.328248e-002, -3.669983e-002, -3.624977e-002, -2.158552e-002, 6.536881e-003, 2.090404e-003, -8.778993e-003, 4.793874e-003, 6.268157e-003, -1.502496e-003, -1.699752e-003, -3.819374e-002, -1.084428e-001, -1.377405e-001, -9.105714e-002, 1.159084e-002, 4.868493e-002, 4.438643e-002, 4.373855e-002, 3.108617e-002, 2.639377e-002, 2.324478e-002, 1.722526e-002, -4.822474e-002, 2.346213e-002, -2.366104e-002, -8.984306e-002, -

© ISO/IEC 2004 — All rights reserved


Copyright International Organization for Standardization
Provided by IHS under license with ISO
No reproduction or networking permitted without license from IHS
Not for Resale

3.563102e-002, -8.272579e-003, 4.286822e-003, -2.358497e-002, -3.478857e-003, 9.338487e-004, 1.430768e-003, 1.466325e-002, -1.032041e-002, -4.017758e-002, -2.933041e-002, 1.256526e-002, 3.980399e-002, 2.878392e-002, 7.257961e-002, 5.298200e-002, 7.679252e-002, 6.871946e-002, 3.679309e-002, 3.797000e-002, -3.605656e-002, -9.088563e-003, 1.641309e-002, -3.313792e-002, -1.551827e-002, -2.167268e-002, 2.158197e-002, -2.277845e-002, -9.541020e-003, -1.977734e-002, -2.995683e-002, 7.314147e-003, 2.040753e-002, 1.335538e-002, 1.562572e-002, -3.936352e-003, -4.426355e-002, -2.063798e-002, 4.412293e-002, 3.766620e-002, 9.007636e-002, 9.103052e-002, 3.075391e-002, 2.903126e-002, -1.742338e-002, -5.348767e-002, -9.035738e-003, -4.610555e-003, 3.684961e-002, -4.117591e-003, 3.708391e-002, -1.324887e-002, -1.913907e-002, -9.193933e-003, -3.808145e-002, -3.041039e-002, -2.065807e-002, -2.477150e-002, -4.446884e-002, -8.659006e-002, -8.680243e-002, -9.743914e-003, -2.277465e-002, -1.739718e-002, 6.663030e-002, 7.274040e-002, -5.090340e-004, -1.164929e-002, 2.501829e-002, -4.552857e-002, -6.568174e-002, -4.340405e-002, 4.325924e-002, 1.315780e-002, 3.881867e-002, 1.030583e-002, -2.636723e-002, -1.047555e-002, 4.434219e-003, 1.922709e-002, 1.922686e-002, -1.313930e-003, -3.633698e-002, -7.080052e-002, -4.710687e-002, -2.534700e-002, -6.722423e-002, -4.373783e-002, 4.696143e-002, 3.170389e-002, -4.337851e-002, -5.001012e-002, 2.353128e-002, 2.144170e-003, -2.638472e-002, -5.209768e-002, 5.209994e-004, -1.185603e-002, 3.431706e-002, 2.220531e-002, -1.498749e-003, -4.791356e-003, 1.251039e-003, 3.327707e-003, -3.813590e-003, -2.269557e-002, -4.447294e-002, -4.970972e-002, 3.229170e-003, 1.912408e-002, -4.866071e-003, 3.637451e-003, 4.523288e-003, -2.550625e-002, -4.955253e-002, -1.792768e-002, 3.259486e-002, 2.946411e-003, 1.007736e-003, -1.093070e-002, -2.194403e-002, -3.632440e-002, 1.046189e-002, 3.378383e-002, 2.291907e-002, 2.655671e-002, 4.011693e-002, 3.560694e-002, 2.185448e-002, 5.891470e-003, 1.527686e-003, 1.464162e-002, 3.857117e-002, 4.336232e-002, 5.063483e-002, -1.280524e-002, -6.088402e-002, -5.356074e-002, -2.531926e-002, 5.916743e-003, 2.161947e-002, 2.292757e-002, -2.948915e-004, -6.158696e-003, 2.089375e-003, -1.101391e-003, -2.406875e-003, 3.035961e-002, 3.685309e-002, 4.016650e-002, 6.437543e-002, 5.685471e-002, 4.585060e-002, 3.464076e-002, 5.112273e-002, 5.063892e-002, 1.060235e-002, 3.276680e-002, -1.318605e-002, -5.838014e-002, -9.480943e-003, 9.119853e-004, -3.181094e-002, -3.439040e-003, 1.141354e-002, 5.726994e-002, 2.076893e-002, -1.686760e-002, 3.471096e-002, 5.511399e-002, -1.249385e-002, 6.059263e-003, 2.911575e-002, 3.009578e-002, 5.743473e-002, 5.041359e-002, 3.625384e-002, 4.332400e-002, 7.363007e-002, 4.512700e-002, 5.998058e-003, 5.474531e-002, 2.294049e-002, -5.715936e-002, -2.760706e-002, -3.948240e-002, -7.411289e-002, 2.422018e-002, 7.945524e-002, 9.140431e-002, 4.411538e-002, -1.206344e-002, -4.216643e-002, 5.873676e-002, -1.563507e-002, -1.911931e-002, -8.179087e-004, -1.437592e-002, 7.486507e-003, 7.166773e-003, -1.131821e-003, 2.457491e-002, 4.024558e-002, 1.749759e-002, 4.395159e-002, 8.725533e-002, 8.385615e-003, -6.139055e-002, -1.421312e-002, -7.854796e-003, -4.689532e-002, 4.039089e-003, 4.014475e-002, 4.004730e-002, 1.225409e-002, -2.998830e-002, -1.493137e-001, -3.678415e-002, -5.316553e-002, -4.005919e-002, -3.269626e-002, -5.753656e-002, -4.831842e-002, -3.378775e-002, -4.040544e-002, -1.863064e-002, -2.750918e-002, -1.506342e-002, 3.430657e-002, 5.854264e-002, 2.724880e-003, -3.507053e-002, -1.201563e-002, 6.481162e-003, -1.472043e-002, 1.460025e-002, 7.245020e-003, -1.800980e-002, -5.014488e-002, -7.729798e-002},
{-9.592290e-002, -3.282481e-002, -1.734212e-002, -1.959817e-002, -1.024545e-002, -5.339526e-002, -9.409507e-002, -7.297434e-002, -5.027958e-002, -7.148746e-002, -1.027739e-001, -1.423074e-001, -1.540043e-001, -1.258365e-001, -6.140255e-002, 8.240277e-003, 5.679390e-002, 8.463886e-002, 7.329855e-002, 3.243479e-002, 2.315361e-002, 6.688513e-002, 1.369614e-001, 1.923910e-001, -3.233847e-002, 1.114311e-002, -5.897283e-003, -1.566503e-003, 3.159034e-002, 8.457142e-003, -1.179599e-002, 3.044748e-002, 6.609975e-002, 6.277781e-002, 3.710864e-002, -9.743297e-003, -5.318306e-002, -6.826905e-002, -4.067902e-002, 6.530660e-003, 5.185451e-002, 6.667585e-002, 4.566510e-002, -1.037802e-002, -4.469647e-002, -3.264514e-002, 4.953046e-002, 1.356358e-001, 2.235141e-002, 3.171583e-002, -1.989126e-002, 9.085997e-003, 5.085824e-002, 5.681030e-003, -1.493191e-002, 1.477949e-002, 9.784548e-003, -6.065016e-003, -2.073385e-002, -1.281088e-002, -8.286368e-003, -7.951934e-003, -6.686878e-003, 4.984102e-003, 3.051682e-002, 4.138121e-002, 2.029678e-002, -3.441872e-002, -8.524336e-002, -8.732425e-002, -2.969052e-002, 3.272863e-002, 4.065661e-002, 1.001583e-002, -4.215202e-002, -3.335724e-003, -9.632393e-003, -2.133617e-002, 3.601301e-002, 7.089220e-002, 3.849626e-002, 3.777062e-003, -4.062338e-002, -6.645305e-002, -6.379715e-002, -3.743632e-002, 4.318754e-003, 1.257455e-002, 1.798547e-002, 4.280274e-002, 4.326908e-002, 8.332158e-003, -3.426319e-002, -2.815653e-002, -3.796084e-003, 1.460617e-002, 8.204412e-003, -2.456569e-002, -3.633040e-002, 1.934681e-002, -5.416617e-003, -5.347536e-003, 1.609357e-002, 2.380633e-003, 5.628019e-003, 1.593392e-002, -7.616350e-004, -2.424850e-002, -3.982490e-002, -3.239597e-002, -5.613714e-003, -3.516815e-003, 1.664302e-003, 3.560599e-002, 7.601308e-002, 5.645796e-002, -1.798029e-005, -4.227269e-002, -3.496850e-002, 6.791650e-003, -3.025864e-002, -3.156008e-002, 3.091850e-002, 7.054428e-002, -1.961712e-002, 3.370810e-002, 4.235137e-002, 2.041194e-002, 3.290126e-002, 2.278971e-002, -1.904392e-002, -4.278866e-002, -3.126912e-002, 1.050296e-002, 5.952422e-002, 2.951356e-002, -7.168735e-003, 1.962050e-002, 7.775785e-002, 9.178096e-002, 8.379180e-003, -7.619876e-002, -7.448135e-002, -2.415033e-002, -


© ISO/IEC 2004 — All rights reserved

Copyright International Organization for Standardization
Provided by IHS under license with ISO
No reproduction or networking permitted without license from IHS
Not for Resale

2.949282e-002, 3.414730e-003, 6.944258e-002, 2.772497e-002, -5.361126e-002, 4.890959e-002, 3.811928e-002, 2.810502e-002, 7.240867e-002, 1.009459e-001, 3.330691e-002, -7.724645e-002, -9.598491e-002, 2.663196e-002, 1.240450e-001, 6.623726e-002, -8.071016e-003, -1.913817e-002, 6.768785e-003, 7.249015e-002, 6.462184e-002, -3.459198e-002, -6.452830e-002, -3.573873e-002, 2.956417e-002, 6.221717e-002, 5.553594e-002, -1.143327e-002, -5.563594e-002, 8.575913e-003, 2.175677e-002, 3.577348e-002, 1.938329e-002, 9.442243e-002, 1.365736e-001, 1.360675e-001, 1.865568e-002, 3.831845e-002, 8.682142e-002, 3.460294e-002, 4.758308e-002, 2.835226e-002, -1.031823e-002, 4.064396e-003, 6.544690e-002, -1.351658e-002, 4.021023e-002, 2.782485e-002, 4.056646e-002, 2.817804e-002, 9.356374e-003, 1.228975e-002, 3.347249e-002, 2.802300e-002, -4.901300e-004, 3.749158e-002, 2.905220e-002, 4.622203e-002, 7.047493e-002, 7.378960e-002, 5.546179e-002, -1.314586e-002, -4.560042e-002, -5.370733e-002, 1.514495e-002, 8.746666e-003, -2.237948e-002, -6.789407e-002, -8.191590e-002, -1.105149e-001, -3.642513e-002, -2.413760e-002, 1.594708e-002, -1.658385e-002, -3.183594e-002, 7.511980e-003, 4.926863e-002, 3.457626e-002, -6.884673e-004, -2.072619e-002, -2.808969e-002, -4.300365e-002, -6.306203e-002, -6.342983e-002, -4.180872e-002, -2.239152e-002, -7.621552e-002, -7.559829e-002, -4.334933e-002, -1.025348e-002, 6.178217e-003, -1.116177e-002, -9.046482e-002, -9.260380e-002, -5.194430e-002, -2.067892e-003, 2.062418e-002, -1.439582e-002, -3.235627e-002, -1.303727e-002, 2.770117e-003, 1.317300e-002, 4.766447e-002, 6.658958e-002, 3.017312e-002, -1.626695e-002, -5.133767e-002, -7.103948e-002, -5.891500e-002, -1.896675e-002, -4.337125e-002, -6.519747e-002, -5.773758e-002, -1.434934e-002, 1.083749e-002, 7.223130e-002, 1.086286e-002, -4.118044e-002, -2.280735e-002, 3.329364e-003, 9.489366e-003, -2.988476e-003, -1.866657e-003, -7.982115e-003, -4.557940e-002, -3.280087e-002, 3.958960e-002, 8.380727e-002, 5.410600e-002, 2.176038e-003, -5.023393e-002, -8.215489e-002, -6.226800e-002, 5.750816e-003, 2.573417e-002, -4.802404e-002, -5.352509e-002, -1.123087e-002, -1.122790e-002, 5.450762e-002, 7.040270e-002, 8.925379e-003, -6.161685e-003, -1.017919e-003, -2.354916e-002, -1.803666e-003, 1.151301e-002, 1.222159e-002, -7.014398e-002, -7.232017e-002, -1.277327e-002, 3.571328e-002, 4.925296e-003, -4.126028e-002, -8.248792e-002, -9.594005e-002, -2.035597e-002, 8.847042e-002, 5.043907e-002, -3.769389e-002, -2.887796e-002, 7.317149e-003, -1.836882e-002, -8.737008e-003, 3.539400e-002, 1.612100e-002, 4.601720e-003, -6.213029e-003, -4.465214e-002, 1.026663e-002, 3.758296e-003, 1.264957e-002, -4.301069e-002, -7.657099e-002, -4.396663e-002, -1.249936e-002, -3.396475e-002, -6.466390e-002, -6.682755e-002, -2.370984e-002, 7.815062e-002, 8.426702e-002, 2.318744e-002, -1.049046e-002, 8.255340e-003, 4.105878e-002, -3.511268e-003, -3.703362e-002, -3.626705e-002, -2.171853e-002, -7.685891e-003, 1.069212e-002, -4.947028e-002, 2.084919e-002, -8.446753e-003, 6.182004e-005, -9.788667e-003, -1.736135e-002, 7.909265e-003, 3.436515e-002, 3.398956e-002, 3.454328e-002, 4.888307e-002, 7.009447e-002, 4.620360e-002, -7.149567e-003, 1.337243e-002, 3.609803e-003, 3.553932e-003, 4.687512e-002, 2.340812e-002, -4.205662e-003, -4.343025e-002, -6.742286e-002, -3.051033e-003, 2.449897e-002, -8.192145e-003, 2.445422e-002, -2.624966e-002, -1.089087e-002, -1.118364e-002, 5.032902e-003, 5.023824e-002, 8.232439e-002, 1.043534e-001, 1.030673e-001, 7.370006e-002, 2.627066e-002, -3.560960e-002, -3.748562e-002, 1.535721e-002, -2.363898e-002, -1.533252e-002, 3.518289e-002, 1.758544e-002, 3.217755e-002, 1.959722e-002, -5.953254e-002, 1.077070e-002, 6.017143e-002, 2.660874e-002, 3.358644e-002, -2.763231e-002, -2.737264e-002, -1.280588e-002, -1.897143e-003, 1.790191e-002, 4.543220e-002, 6.110205e-002, 3.355144e-002, -1.151469e-002, -3.072376e-002, -3.980801e-002, -1.166599e-002, 9.462667e-003, -2.771951e-002, 1.016395e-002, 2.550818e-002, -3.257572e-002, -1.617628e-002, 3.634146e-002, -1.187786e-002, 2.374500e-003, 4.094483e-002, 2.819552e-002, 3.792234e-002, -2.759590e-003, -2.953601e-002, -9.293734e-003, -2.216305e-003, -2.202979e-003, 1.014287e-003, -1.388822e-002, -4.758323e-002, -4.654329e-002, 2.440347e-003, 6.229516e-003, 5.510431e-003, 5.260140e-002, 1.196723e-002, 7.213949e-003, 1.251200e-002, 1.773936e-003, -7.661133e-003, 2.537454e-003, -1.027919e-002, -1.759639e-002, -1.287727e-003, -5.400751e-003, -2.242640e-002, 5.030730e-003, -1.647370e-002, 8.943373e-003, 1.838256e-002, 2.981741e-003, -2.081852e-002, -5.850119e-002, -7.266760e-002, -2.792803e-002, 4.104760e-002, 5.652929e-002, 2.451483e-002, 1.197399e-002, -1.566768e-003, 2.248911e-002, 4.150033e-003, -5.609799e-002, -5.149182e-002, -9.349995e-003, 2.639005e-003, -2.201885e-002, -3.866041e-002, 2.557935e-002, -5.498171e-002, 6.188913e-003, 6.014612e-003, 2.071680e-002, 4.001821e-002, 3.419168e-002, -1.993394e-002, -6.667959e-002, -5.753496e-002, -1.955595e-002, 2.415630e-002, 4.041278e-002, 3.830742e-002, -4.002643e-003, -5.698694e-003, 2.158643e-002, 2.219475e-003, -3.892335e-002, -4.058839e-002, 1.967347e-002, 5.748718e-002, 6.924719e-003, -4.368404e-002, 9.905352e-002, -2.423751e-002, 1.246877e-002, 3.013133e-002, 2.743162e-002, 5.598722e-002, 5.041857e-002, -3.649851e-003, -5.194218e-002, -5.621929e-002, -5.464682e-002, -3.685288e-002, -2.746257e-003, 1.510674e-002, -6.350151e-003, -2.396170e-002, -1.734297e-002, -7.596990e-003, 2.532561e-003, 1.488652e-002, 2.621572e-002, 2.737047e-002, -1.180333e-002, -4.407000e-002},
{-1.199781e-002, 2.316506e-002, -4.021168e-002, -8.820141e-003, -3.594036e-002, -1.127002e-001, -1.069394e-001, -7.486277e-002, -5.993033e-002, -5.281931e-002, -6.098222e-002, -7.148635e-002, -6.884491e-002, -4.930932e-002, -2.526416e-002, -1.193101e-002, 5.868227e-005, 7.628976e-003, 2.014625e-002, 3.873273e-002, 5.732856e-002, 7.614593e-002, 1.072657e-001, 1.285743e-001, -

© ISO/IEC 2004 — All rights reserved


Copyright International Organization for Standardization
Provided by IHS under license with ISO
No reproduction or networking permitted without license from IHS
Not for Resale

9.654196e-004, 3.360388e-002, -3.042380e-002, 1.548054e-002, 1.848417e-002, -1.160792e-002, 2.658150e-002, 6.630554e-002, 7.577373e-002, 5.977620e-002, 2.942674e-002, -1.128454e-002, -3.358681e-002, -2.892186e-002, -8.181722e-003, 4.777333e-003, 1.465687e-002, 1.632890e-002, 1.464635e-002, 1.215923e-003, -1.353051e-002, -9.879223e-003, 2.385680e-002, 7.390222e-002, -7.450260e-004, 4.207717e-002, -1.116589e-002, 2.962296e-002, 6.415003e-002, 4.701299e-002, 7.599989e-002, 8.977315e-002, 6.892902e-002, 2.265176e-002, -2.665025e-002, -6.295182e-002, -7.874738e-002, -5.001284e-002, -1.117188e-002, 8.501668e-003, 1.738620e-002, 2.089913e-002, 7.361135e-003, -5.901595e-002, -1.227666e-001, -1.172222e-001, -3.738323e-002, 7.365863e-002, -1.271526e-002, 2.236842e-002, 4.599624e-003, 2.334779e-002, 3.481052e-002, -7.095598e-003, 3.609738e-002, 8.006117e-002, 6.380627e-002, 1.140862e-002, -3.793219e-002, -7.450070e-002, -7.865972e-002, -3.668183e-002, 1.502498e-002, 2.576157e-002, 3.110416e-002, 4.182103e-002, 3.577139e-002, -3.631818e-002, -8.929654e-002, -5.560007e-002, 2.932569e-002, 7.864209e-002, -3.713166e-002, -3.532789e-003, 1.698249e-002, -1.710982e-002, -3.223214e-002, -4.190107e-002, 6.036876e-002, 1.094870e-001, 7.721298e-002, -2.434717e-003, -7.054291e-002, -9.388103e-002, -6.029385e-002, 2.439268e-002, 7.763055e-002, 4.228702e-002, 1.286428e-002, 3.475790e-002, 5.335934e-002, 1.639231e-002, -3.701760e-003, 5.203921e-003, -2.209785e-002, -6.761844e-002, -2.197790e-002, -1.853671e-002, 6.991153e-003, -4.468896e-002, -2.710904e-002, -1.893187e-002, 5.924120e-002, 5.181618e-002, 1.740548e-002, -2.574328e-002, -6.053348e-002, -7.849370e-002, -3.200539e-002, 6.285683e-002, 1.195053e-001, 5.797212e-002, 1.100424e-002, 3.770281e-002, 4.664665e-002, 9.266217e-003, 7.974144e-003, 2.175280e-002, -4.115331e-002, -9.501860e-002, 1.147805e-002, -3.513379e-002, -7.475035e-004, -3.548264e-002, 5.665663e-003, -2.062087e-002, 6.054013e-002, 4.876765e-002, -1.186100e-002, -2.947605e-002, 1.091702e-002, 1.572728e-002, -1.970002e-002, -4.112414e-002, -1.804166e-002, -1.694159e-002, -1.772165e-002, 4.052823e-002, 2.640796e-003, -1.027436e-001, -1.148634e-001, -7.737204e-002, -6.039070e-002, -8.047313e-002, 3.682007e-002, -1.693916e-002, -2.571153e-002, -1.289882e-002, 2.398519e-002, -1.445579e-003, 9.215863e-002, 8.243772e-002, 2.097019e-002, -1.095187e-002, 3.121949e-002, 7.191618e-002, 6.288355e-002, -5.162830e-002, -1.036701e-001, -1.076948e-001, -1.295895e-001, -7.772300e-002, -9.669256e-002, -1.307507e-001, -1.078396e-001, -6.091368e-003, 8.359017e-002, 4.620740e-002, 9.332881e-003, -3.242138e-002, -3.338110e-002, -3.380126e-002, -2.676870e-002, -5.676846e-002, -3.179901e-002, -3.349160e-002, 1.323461e-002, 5.903123e-003, -3.365877e-002, 7.773924e-002, 1.144618e-001, 2.954057e-002, 1.460420e-002, -3.325194e-002, -1.076114e-001, -6.616068e-002, -3.147780e-002, 2.095637e-002, 7.451575e-002, 1.520394e-001, 1.741793e-001, 4.711777e-002, -2.082634e-002, -2.170490e-002, -1.955841e-002, -2.808743e-002, -5.129118e-002, -7.412881e-002, -4.991879e-002, -5.999245e-002, -4.531836e-002, -1.857351e-003, 4.803956e-002, 1.093429e-001, 9.543331e-002, 3.999181e-002, 8.288985e-002, 5.315664e-002, -1.528068e-002, -3.188106e-002, -6.080162e-003, 2.756681e-002, 6.125484e-002, 9.561169e-002, 4.721539e-002, -4.782239e-002, -4.016170e-002, -4.075434e-003, -7.969577e-003, 5.609594e-003, -4.020095e-003, 5.296352e-003, 1.398668e-002, -3.271563e-002, -4.838676e-002, -2.120394e-002, 1.200730e-002, 2.393798e-002, -6.531821e-003, -1.227135e-002, 7.245328e-002, 5.632605e-002, 2.876332e-002, 3.030658e-003, -1.443077e-002, -2.544453e-003, -2.812412e-002, 1.433352e-002, 6.387879e-003, -3.684254e-002, -1.556069e-002, 2.012713e-002, 1.415763e-002, 6.588977e-003, 3.340356e-002, 6.414565e-002, 6.804159e-002, -3.050521e-003, -4.872035e-002, -5.050758e-002, -4.693507e-002, -4.901233e-002, -3.923761e-002, -9.232244e-004, 3.308574e-002, 4.306674e-002, 3.278404e-002, 1.373072e-002, -1.411829e-002, -2.282236e-002, -4.813731e-002, -3.792892e-002, -2.999959e-003, -5.690826e-003, 3.362998e-002, 4.283659e-002, 2.004688e-002, 7.193678e-003, 3.054587e-002, 9.359807e-002, 1.124313e-001, 4.647983e-002, -8.681112e-003, -2.913719e-002, -3.999132e-002, -1.893479e-002, -6.000686e-003, 2.746512e-003, 2.532872e-003, 2.854994e-002, 2.184813e-002, -3.796494e-004, -1.878724e-002, -2.880081e-002, -9.263475e-003, -2.435484e-002, -1.330018e-002, 5.778871e-003, 2.324911e-002, 2.323374e-002, 1.050061e-002, 1.190379e-002, 9.997120e-003, 7.278633e-002, 1.115822e-001, 7.368942e-002, 5.018910e-002, 3.976105e-002, 2.552719e-002, 2.078010e-002, -5.646829e-003, -7.032465e-003, -3.718599e-003, 2.792316e-002, 9.629109e-003, -1.009605e-002, -5.553191e-003, -1.445700e-002, 6.526361e-003, 2.670293e-002, 1.237512e-002, 1.362454e-002, 2.613841e-003, 1.264958e-002, 2.398609e-003, 8.223584e-003, -5.524875e-003, 1.346719e-002, 1.735773e-002, -1.650509e-003, -4.397672e-003, -9.453948e-003, -1.204636e-002, -1.277197e-002, -2.048113e-003, -7.843531e-007, 1.447985e-002, 2.858078e-002, 1.516872e-002, 7.461113e-003, 3.149679e-002, 2.191068e-002, 1.498427e-002, 4.272019e-002, -1.165273e-002, -2.251418e-002, -1.764680e-002, 9.170756e-003, 4.662149e-003, 8.154023e-003, 1.493535e-003, -5.908140e-003, -4.115421e-002, -8.271025e-002, -1.048519e-001, -8.849217e-002, -2.912799e-002, 2.223552e-002, 5.603781e-003, -7.109243e-003, 1.147491e-002, 1.348048e-002, 3.436463e-002, 3.035623e-002, 6.474368e-002, 4.021669e-002, -2.810369e-002, 2.383685e-002, -2.738725e-002, -8.145858e-002, -3.690113e-002, -1.099322e-002, -7.040755e-003, 9.436169e-003, 9.994084e-003, 9.331541e-003, -1.848047e-002, -5.996699e-002, -7.091774e-002, -1.597651e-002, 5.094648e-002, 4.172387e-002, 2.756505e-004, 9.940405e-003, -1.051822e-002, 1.052134e-002, 4.164872e-002, -1.248737e-002, 2.712827e-002, 5.086278e-002, -3.477573e-002, -2.327874e-002, 4.593697e-003, -4.094780e-002, -


© ISO/IEC 2004 — All rights reserved

Copyright International Organization for Standardization
Provided by IHS under license with ISO
No reproduction or networking permitted without license from IHS
Not for Resale

1.364439e-002, -1.650415e-002, -1.887701e-002, -5.317604e-004, 1.745293e-002, 3.004134e-002, 9.925136e-003, -1.441461e-002, -5.455713e-003, 4.142862e-002, 3.892700e-002, -3.431238e-002, -1.827474e-002, 2.680864e-002, 1.733243e-003, 1.455069e-002, -5.245504e-004, -3.033148e-002, 2.758628e-003, 3.262308e-002, 4.228550e-003, -1.188584e-002, 1.969012e-002, 1.038784e-002, 3.431480e-002, 1.376399e-002, -6.534486e-003, -1.465070e-002, 9.876903e-003, 2.535481e-002, 1.454614e-002, 8.730330e-004, 4.816632e-003, 6.587900e-003, -3.567566e-002, -6.446920e-002, -2.728562e-002, 8.351136e-003, 2.331796e-002, 1.627874e-002, -2.107500e-002, -5.991069e-003, 1.238471e-002, -2.423352e-002, 4.113132e-003, 2.307840e-002, 5.228654e-004, -2.418816e-003, 5.901723e-004, -2.384005e-003, 7.643219e-003, -1.176311e-002, 2.990314e-003, 1.407299e-002, -2.401923e-003, -1.507395e-002, -2.383809e-002, -4.923172e-002, -4.571254e-002, -8.594164e-004, 1.571304e-003, -3.640751e-002, -1.452366e-002, -1.101500e-002, -3.602287e-002, -3.213968e-002, -1.774719e-002, -1.448654e-002, 3.004997e-002, 3.234968e-002, -2.320971e-002, -4.149105e-002, -6.605426e-002, -3.823032e-002, 2.476846e-002, -1.238684e-004, 2.745932e-004, 6.131091e-003, -5.401637e-003, -2.443924e-002, -3.917605e-002, -4.316715e-002, 1.008095e-002, 3.989698e-002, 6.939216e-003, -3.484732e-002, -3.821676e-002, -3.784551e-002, -3.466953e-002, -1.981329e-002, 3.170195e-002, 5.109016e-002, 5.701570e-002, 3.647985e-002, -1.459186e-002, -6.008511e-002},
{-5.271482e-002, 4.761212e-004, 3.281411e-002, 3.864550e-003, 4.560460e-002, 7.140945e-002, 5.944457e-002, 5.515451e-002, 6.005089e-002, 5.306601e-002, 4.213516e-002, 4.005423e-002, 1.872157e-002, 2.756521e-003, 1.650735e-003, 1.254482e-002, 1.608902e-002, 1.646690e-002, 1.460549e-002, 9.621168e-003, 3.109783e-003, 5.748708e-003, 6.369636e-003, -1.640019e-003, -3.163751e-002, -1.404029e-003, 3.265729e-003, -2.136680e-002, 2.068538e-002, 2.597909e-002, -8.282279e-003, -2.952305e-002, -3.163662e-002, -1.883985e-002, -1.210153e-002, -1.247573e-002, -2.219165e-002, -3.047485e-002, -2.914986e-002, -8.901344e-003, 1.713118e-003, -9.698501e-004, -6.426110e-003, -1.552782e-003, 8.652148e-003, 2.048330e-002, 3.699277e-002, 3.133817e-002, -4.012091e-003, -6.743365e-003, -2.624913e-002, -3.033127e-002, 1.195989e-002, -2.930175e-002, -6.774034e-002, -6.295057e-002, -2.389541e-002, 4.261847e-003, 1.756060e-002, 1.114410e-002, -4.842545e-003, -2.552989e-002, -3.184680e-002, -2.546579e-002, -1.865877e-002, -3.490275e-002, -4.656987e-002, -2.927791e-002, 1.183212e-003, 2.318917e-002, 4.262269e-002, 4.671210e-002, 2.757867e-002, 5.292810e-003, -2.114892e-002, -2.505998e-003, 1.556176e-002, -7.040527e-002, -9.169374e-002, -4.157197e-002, -8.486128e-004, 1.115913e-002, 1.009797e-002, 8.637734e-003, 5.646800e-003, -3.896520e-003, -2.099990e-003, -3.794916e-003, -2.390522e-002, -5.830809e-002, -6.247657e-002, -2.912225e-002, -6.260568e-003, 5.864951e-003, -1.524345e-002, -2.920694e-002, 4.744081e-002, 2.305548e-002, 2.913819e-002, 5.219911e-002, 3.953315e-003, -9.222708e-002, -9.633503e-002, -8.804356e-002, -1.010235e-001, -7.455891e-002, -2.724369e-002, 1.142362e-002, 1.190960e-002, -2.133156e-002, 1.219726e-002, 5.223734e-002, 1.017609e-002, -3.626018e-002, -3.397065e-003, 2.774688e-002, 1.092340e-002, -2.087088e-002, -5.858092e-002, -8.063438e-002, 1.913031e-002, 3.690638e-002, 6.939896e-002, 5.018224e-002, -1.717610e-002, -4.677556e-002, -1.639853e-002, -2.684315e-002, -8.335281e-002, -9.956034e-002, -6.062628e-002, 7.928783e-004, 1.093557e-002, -7.096462e-002, -8.169521e-002, 4.252964e-002, 8.436729e-003, -3.883448e-002, 3.960748e-002, 6.568255e-002, -1.170519e-002, -8.023218e-002, -6.917693e-002, -2.754702e-002, -6.204925e-002, -1.742189e-002, 3.504427e-002, 3.074433e-002, 8.687866e-003, 7.276349e-002, 1.095472e-001, 9.827716e-002, 1.102333e-001, 6.245035e-002, -3.489226e-002, -3.048438e-002, 3.655767e-002, -6.934722e-002, -1.610135e-001, -2.171759e-002, -2.455402e-002, -7.616813e-002, 2.308900e-002, 1.407425e-002, -5.175666e-002, -2.161252e-003, 2.838554e-002, 8.239815e-002, -2.951994e-002, -3.631076e-002, -9.657477e-003, -4.303801e-002, -2.711127e-002, 5.895273e-002, 9.035045e-002, -4.910297e-002, -1.077729e-002, 6.715937e-002, -6.814196e-002, -8.403361e-002, 3.579316e-002, 3.639063e-002, -3.733505e-002, 5.653763e-002, 6.747232e-002, 3.133195e-003, 6.603609e-002, -1.844201e-002, 7.950283e-004, 6.739400e-002, -3.972019e-002, -5.544196e-002, 5.363250e-002, 2.202337e-002, -1.073151e-002, -4.652085e-002, -5.347097e-002, 6.500934e-003, 2.756626e-002, -1.416446e-002, -7.592529e-002, -3.482595e-003, 6.569798e-003, 9.856997e-002, 1.401271e-001, 1.444642e-001, 6.852881e-002, 6.967648e-002, 3.882008e-002, -5.395899e-003, 4.177348e-002, -8.425640e-003, 1.470106e-002, 1.235711e-001, 1.527578e-001, -1.179507e-002, 2.130217e-002, -1.029897e-002, -4.285044e-002, -2.138302e-002, 9.802046e-003, 5.101163e-003, -1.740829e-002, 2.558139e-002, 8.914403e-002, 8.739829e-002, 7.763655e-002, 6.273786e-002, 3.134309e-002, 5.431642e-002, 4.168262e-002, 2.187277e-002, 5.911878e-003, -5.371818e-004, 3.265925e-002, -2.034400e-004, -2.431008e-002, 2.222536e-002, 9.195656e-002, 1.318501e-001, -1.160016e-002, -9.155928e-003, -5.555382e-003, -2.155249e-002, 2.247650e-002, -9.417180e-003, -1.796178e-002, 3.241021e-002, 7.424398e-002, 5.714488e-002, 6.262098e-003, -5.755527e-002, -7.839399e-002, -1.442799e-003, 3.346812e-002, 1.614387e-002, -1.226320e-002, -2.989573e-002, 1.821020e-002, -1.841402e-002, -1.311061e-002, -7.591743e-002, -3.535115e-002, 2.908902e-002, -1.423782e-002, 2.438767e-002, 2.976029e-002, -7.251089e-003, 9.772625e-004, -3.246951e-002, -1.108626e-002, 4.339296e-002, 6.191854e-002, 3.482092e-002, -2.776504e-002, -8.489016e-002, -8.026637e-002, -4.634716e-003, 2.190980e-002, 9.637593e-003, -4.671064e-002, -5.941856e-002, -1.058658e-003, -2.452680e-002, 4.926113e-002, -4.272946e-002, -1.042242e-001, -4.965117e-002, -

© ISO/IEC 2004 — All rights reserved


Copyright International Organization for Standardization
Provided by IHS under license with ISO
No reproduction or networking permitted without license from IHS
Not for Resale

9.617648e-003, 3.619775e-002, 2.461705e-002, 1.409398e-002, -5.244972e-003, -4.336575e-002, -4.096751e-002, 6.437854e-003, 1.021993e-002, -1.846746e-002, -6.623387e-002, -9.008525e-002, -4.444360e-002, -5.320728e-003, 8.542629e-003, -1.504333e-002, -6.628496e-002, -5.835341e-002, -5.534904e-003, -1.707593e-002, 3.312972e-002, 6.381103e-002, -5.568607e-002, -8.032859e-002, 9.041419e-003, 2.083730e-002, 9.175283e-003, 2.146450e-002, 4.617738e-002, 5.200579e-003, -9.866402e-003, -1.213293e-002, -4.132728e-002, -6.624725e-002, -6.576990e-002, -1.634703e-002, 1.898532e-002, -1.413602e-002, -5.204545e-003, -3.549629e-002, -5.526744e-002, -2.952393e-002, -7.813083e-003, -5.752254e-003, -6.601399e-003, 5.125953e-002, 3.246021e-002, -1.846415e-002, -4.322069e-003, -1.862400e-002, -3.223149e-002, 1.329698e-002, 6.652552e-002, 6.022439e-002, 5.438094e-002, 6.476246e-002, 5.483444e-002, 5.035828e-002, 6.768812e-002, 7.127906e-002, 6.523033e-003, -2.439818e-002, 1.105734e-002, -3.723105e-002, -2.919315e-002, 5.439249e-003, 5.781012e-004, -9.663677e-003, 2.979590e-002, 1.157975e-002, 3.036918e-002, 2.825803e-002, -1.480262e-002, -3.255337e-002, -5.300483e-002, -9.207617e-003, 3.572410e-002, 4.208103e-002, 5.466167e-002, 7.390879e-002, 8.508062e-002, 9.687569e-002, 8.551241e-002, 2.889111e-002, -1.735581e-002, 8.549008e-003, 2.789942e-002, -2.046087e-002, -6.047158e-003, 1.402491e-002, -7.902293e-003, -5.276422e-002, 6.506392e-002, 5.109385e-002, 9.446562e-003, 2.882287e-002, -1.628627e-002, -1.114717e-002, -2.837788e-002, -2.537762e-002, -1.317083e-003, -2.476589e-002, -3.362416e-002, -1.092139e-002, 9.775387e-003, 1.189083e-002, -1.520441e-002, -4.829138e-002, -2.107948e-002, 1.387795e-002, 3.016485e-002, 2.073694e-002, -5.728244e-003, 2.908965e-005, 1.010010e-003, -6.855664e-002, 3.739056e-002, 6.509443e-002, -2.685767e-002, -1.273129e-002, -2.661844e-002, 6.019606e-003, 1.835713e-002, -1.708680e-002, -1.703407e-002, -6.077940e-002, -9.370322e-002, -7.974919e-002, -5.116046e-002, -4.610711e-002, -6.702294e-002, -6.838117e-002, -1.221081e-002, -4.711400e-002, -4.908982e-002, 2.340799e-002, 1.470284e-002, -6.666983e-004, 2.700597e-002, 3.893621e-002, 4.284065e-002, 1.681090e-002, -5.846672e-002, -3.863513e-002, -1.572483e-002, 1.439352e-002, 4.075160e-002, -2.549185e-003, -1.898666e-003, -4.453665e-002, -8.587435e-002, -6.270143e-002, -2.489319e-002, -1.216489e-002, -2.939599e-002, -1.967711e-002, 5.067142e-003, -4.526177e-002, -8.372055e-002, 1.133419e-002, 4.880517e-002, 2.724410e-002, 1.597858e-002, 2.329164e-003, 2.872354e-002, -1.002360e-002, -4.444755e-002, -2.275827e-002, -5.385531e-003, 1.773020e-002, 2.841647e-002, 3.846691e-003, 8.554741e-003, -9.449260e-003, -4.322289e-002, -1.181844e-002, 3.701882e-002, 6.061664e-002, 3.131803e-002, -4.029324e-003, -2.239067e-002, -6.553225e-003, 1.145433e-002, 4.613591e-002, 3.462339e-002, 1.240606e-002, -6.388965e-003, -4.123822e-002, -4.837913e-002, -4.372315e-002, -1.307754e-002, 1.051938e-002, -2.209607e-003, -8.330858e-003, -1.388539e-002, -1.299014e-002, 2.195918e-003, 2.034637e-002, -1.260473e-002, 2.527537e-002, 8.656808e-002, 1.111805e-001, 5.111280e-002, -1.727835e-002, -5.551393e-002, -2.114436e-002, 4.739953e-002, 1.112439e-001, 1.167019e-001, 9.151893e-002, 4.068361e-002, -2.956181e-002, -5.853682e-002, -4.127810e-002, 7.577111e-003, 4.037966e-002},
{5.094325e-002, 8.411940e-003, 5.848111e-002, 3.594992e-002, 2.212211e-002, 2.595523e-002, -4.740982e-003, -5.596310e-002, -7.300934e-002, -3.682694e-002, 1.219038e-002, 4.059782e-002, 3.760829e-002, 1.070253e-002, -3.653451e-002, -7.436431e-002, -1.023958e-001, -1.073059e-001, -7.413951e-002, -1.396681e-002, 3.393328e-002, 5.854064e-002, 5.867573e-002, 5.513244e-002, 3.402176e-002, 5.845880e-003, 7.109353e-002, 3.130147e-002, 7.725360e-003, 1.025085e-002, -2.044462e-002, -6.344288e-002, -6.592067e-002, -2.742731e-002, 2.252753e-002, 5.679068e-002, 6.862557e-002, 4.859901e-002, 2.280864e-002, -5.105184e-003, -4.179455e-002, -6.137990e-002, -4.666210e-002, 8.098586e-003, 3.404446e-002, 3.967158e-002, 1.577266e-002, 1.381482e-002, 9.123805e-003, -4.593493e-003, 5.632840e-002, -1.767415e-002, -2.990731e-002, 5.709782e-003, -3.207545e-003, -2.946028e-002, -5.395200e-003, 3.312028e-002, 5.184126e-002, 4.056023e-002, 3.105987e-002, 1.239088e-002, 3.962783e-002, 6.719036e-002, 4.081010e-002, -5.657848e-005, -1.868489e-002, -1.597046e-003, 1.123633e-005, -1.277376e-003, 2.441800e-003, 2.967478e-002, -2.377612e-002, -2.312008e-002, 2.236617e-003, -6.453655e-002, -2.359048e-002, 1.698923e-002, -3.406948e-002, -6.734177e-002, -3.367204e-002, 4.133821e-002, 9.945640e-002, 8.595123e-002, 7.747184e-003, -8.628156e-002, -6.072307e-002, 3.849366e-002, 7.447682e-002, 2.338969e-002, -3.844382e-002, -5.770543e-002, -5.115979e-002, -1.915964e-002, 2.932154e-002, 5.831871e-002, -4.911835e-002, -2.881677e-002, -5.214887e-002, -6.412086e-002, -6.192915e-003, 1.321444e-002, -2.548822e-002, -2.769169e-002, -2.608637e-003, 3.397856e-002, 7.081714e-002, 8.661880e-002, 6.526590e-002, -4.345905e-002, -1.342691e-001, -3.562957e-002, 4.990722e-002, 2.244897e-002, -5.836466e-002, -8.687956e-002, -5.019658e-002, 1.031902e-002, 2.780113e-002, 1.692841e-002, -3.344606e-002, -1.314017e-002, -3.924557e-002, -2.179762e-002, 5.028038e-003, -3.344144e-002, -3.057557e-002, 2.677144e-002, 4.812312e-002, 4.465370e-002, -5.230195e-003, -4.144898e-002, -2.402601e-002, -3.570355e-002, -1.154338e-001, -1.009111e-001, 3.862885e-003, 5.022525e-003, -8.431685e-002, -8.720262e-002, -1.693272e-002, 3.596750e-002, 3.848188e-002, 3.804297e-002, 3.059782e-002, 5.036547e-002, 1.586537e-002, 2.080969e-002, 4.331069e-003, -6.376718e-002, 1.288694e-002, 7.131669e-002, 2.560856e-002, -1.073305e-002, -7.619126e-003, -2.367399e-002, -6.186655e-002, -9.107113e-003, 1.883584e-002, -3.937876e-002, 5.103639e-002, 5.617511e-002, -2.029466e-002, -1.646383e-002, 1.517936e-002, -6.180252e-003, 1.535842e-002, 4.275223e-002, -


© ISO/IEC 2004 — All rights reserved

Copyright International Organization for Standardization
Provided by IHS under license with ISO
No reproduction or networking permitted without license from IHS
Not for Resale

1.340755e-002, 3.068643e-002, 1.212009e-002, 2.621887e-002, 4.789268e-002, -7.685100e-003, -2.353617e-002, 4.488284e-002, 3.413317e-002, -1.435249e-002, 4.406182e-002, 8.813077e-002, -2.064696e-002, 1.923690e-002, 8.932572e-002, -8.089208e-003, 3.558323e-002, 3.911355e-002, 3.060714e-004, -2.381760e-002, -1.305235e-002, -4.110261e-002, 1.357308e-002, 7.899691e-002, -6.984071e-002, -6.612218e-002, -2.900711e-002, 8.987008e-003, 6.341991e-002, 2.068631e-002, 3.267187e-002, 1.012115e-001, 2.466352e-002, -5.539995e-002, 4.620652e-002, 1.007617e-001, -7.550943e-003, 3.202026e-002, 9.395536e-002, -5.271122e-002, 2.369229e-002, 6.761835e-002, 3.320250e-002, -5.845271e-002, 5.974020e-002, 2.767700e-002, 4.056879e-002, 8.492637e-002, 1.300689e-002, 1.091620e-002, 1.084115e-002, -3.202748e-002, -4.863012e-003, -8.912512e-003, -3.673174e-003, 1.306318e-002, 2.316133e-002, 3.565740e-002, 4.627227e-002, 4.001110e-003, -3.210459e-002, 2.423814e-002, 7.118159e-002, -5.837925e-002, 1.302514e-002, 3.021097e-002, 6.262412e-002, -2.166667e-002, 1.195343e-001, 5.753443e-002, -4.823313e-002, -6.937704e-002, 6.897707e-002, 6.783512e-002, 3.464803e-002, -2.894114e-002, -2.561805e-002, -3.389424e-002, -7.019383e-002, -9.966447e-002, -1.026182e-001, -1.082446e-001, -1.141951e-001, -1.205845e-001, -8.172040e-002, 2.497837e-002, 3.776663e-002, -2.134019e-002, 6.548819e-003, -1.198838e-002, 3.562941e-002, 1.496612e-002, 1.048610e-001, 9.950972e-002, -9.759992e-002, -1.885006e-001, 3.768612e-002, 4.073582e-002, 1.443665e-002, 1.130513e-003, 3.024984e-003, 8.988321e-003, -2.378829e-002, -6.450662e-002, -9.630176e-002, -1.042204e-001, -8.449759e-002, -6.019103e-002, -2.917331e-002, 2.712789e-002, -4.651641e-003, -6.071354e-003, -2.092955e-002, -5.718596e-002, -1.124843e-002, 3.971720e-002, 1.703385e-002, 1.263615e-001, 2.238193e-002, -1.141302e-001, -3.824217e-002, -1.400026e-002, 1.271258e-002, 4.186268e-003, 1.714588e-002, 4.265106e-002, 5.602794e-002, 5.463432e-002, 3.186803e-002, 2.713509e-002, 4.375451e-002, 4.061402e-002, 1.663006e-002, -1.385709e-003, -3.023453e-002, -1.623029e-002, -3.650211e-002, -5.989936e-002, -2.914420e-002, 2.851373e-002, -3.639408e-002, -2.292469e-003, 7.123960e-002, 2.285185e-002, -4.672659e-002, -2.657523e-002, 6.335449e-003, 1.518767e-002, 2.133349e-002, 1.376492e-002, 3.969842e-002, 9.022717e-002, 9.995590e-002, 9.239186e-002, 6.653601e-002, 6.696177e-003, -4.422144e-002, -4.671797e-002, -2.741571e-002, -7.515249e-003, -1.081176e-002, -2.629959e-002, 4.881669e-004, 1.661955e-002, -3.021193e-002, -1.034914e-001, -3.332044e-002, 2.007224e-002, -3.203362e-003, -3.334301e-002, 8.687440e-003, 1.429740e-002, 2.223930e-002, 2.943954e-003, 1.440684e-004, 2.603788e-002, 2.929422e-002, 1.371121e-002, -2.202749e-002, -4.704302e-002, -6.265832e-002, -3.819512e-002, -3.578322e-002, -1.389082e-002, 1.701134e-002, 1.038759e-002, 3.308909e-002, 1.206922e-002, -5.577362e-002, -8.858332e-002, -5.678329e-002, -2.571496e-002, 1.669138e-002, -1.336547e-002, 7.212896e-003, 1.308507e-002, 1.812610e-002, 1.699379e-002, 2.150906e-002, 4.554444e-002, 5.197277e-002, 4.127734e-002, 5.478191e-003, -2.802051e-002, -2.688767e-002, 6.326663e-005, -5.087488e-002, -2.808141e-002, 3.148518e-002, 3.157929e-003, -1.471532e-002, -1.255021e-002, -5.900738e-002, -7.376796e-002, -6.598552e-003, 2.832681e-002, 1.958530e-002, 8.932592e-003, 6.266260e-003, 9.728401e-003, 1.328125e-002, 6.012270e-003, 2.442593e-002, 6.018970e-002, 6.905423e-002, 4.592062e-002, 9.326608e-003, -1.216826e-003, 2.698366e-002, 3.078339e-002, -2.669083e-002, 7.293007e-003, 4.023183e-002, -1.379301e-002, -5.177927e-002, -4.325160e-002, -1.978901e-002, -1.981329e-002, 2.338157e-002, 5.867626e-002, 1.426956e-003, 4.656130e-003, 1.059052e-003, 3.930777e-004, -8.530919e-004, -6.618801e-003, 7.426559e-003, 2.921596e-002, 3.883024e-002, 3.064738e-002, 1.514219e-002, 1.985169e-002, 1.472856e-002, -1.830762e-002, -7.897167e-003, 2.921385e-002, 3.063378e-003, -3.110187e-002, -1.048119e-002, 2.086990e-003, -1.956086e-002, 6.631087e-003, 6.901807e-002, 6.046102e-002, -2.678519e-002, -1.100510e-002, -9.777923e-003, -9.424015e-003, -1.454813e-002, -1.495074e-002, -2.909149e-003, 2.192258e-003, 2.101419e-002, 2.981097e-002, 2.595834e-002, 1.940596e-002, -1.907911e-002, -6.357166e-002, -4.579083e-003, 5.005038e-002, 9.847678e-003, -3.393326e-002, -4.179506e-002, -2.309034e-002, -5.656120e-002, -1.258260e-003, 8.786820e-002, 6.660281e-002, -1.058147e-002, -3.563281e-003, -1.553013e-002, -1.979248e-002, -2.386980e-002, -1.675840e-002, -1.134284e-003, -1.404971e-002, -3.006027e-003, 1.965958e-003, -8.196390e-003, -1.873263e-002, -2.356773e-002, -6.608220e-003, 3.358303e-002, 3.712133e-002, 1.923456e-002, 1.983063e-002, 6.421921e-003, 1.191165e-002, 5.624376e-003, 3.762476e-003, 2.546900e-002, 1.713381e-002, 5.531409e-002, 4.240281e-002, 8.818404e-004, -2.786599e-002, -3.624621e-002, -2.254378e-002, -7.438877e-003, -3.079081e-002, -4.369136e-002, -5.885814e-002, -7.672305e-002, -7.792196e-002, -4.802980e-002, -6.164115e-003, 2.884465e-002, 1.840017e-002, 3.346969e-003, 4.683774e-002, 5.176093e-002, 4.877846e-002, 2.089799e-002, -2.752219e-002, -5.444958e-002, -6.239195e-002},
{-9.044224e-003, -2.316416e-002, -8.641822e-003, -1.164622e-002, -5.004976e-003, 2.896917e-002, 5.268529e-002, 5.741915e-002, 4.340207e-002, 2.745610e-002, 1.378538e-002, 3.395983e-003, 1.380252e-003, 1.110750e-002, 3.787225e-002, 5.562840e-002, 5.973703e-002, 4.847637e-002, 3.869877e-002, 2.685566e-002, -1.909172e-004, -2.351691e-002, -4.415504e-002, -7.341039e-002, -5.143373e-003, -3.387089e-003, 1.656163e-002, 8.129780e-003, -1.666721e-002, -2.273379e-002, -2.217834e-002, -3.440232e-002, -4.006881e-002, -4.208359e-002, -4.196024e-002, -4.691432e-002, -4.543620e-002, -2.358205e-002, 1.355638e-002, 4.168479e-002, 5.268163e-002, 4.910155e-002, 4.838787e-002, 4.551637e-002, 9.894317e-003, -2.122854e-002, -4.265847e-002, -6.317831e-002, -

© ISO/IEC 2004 — All rights reserved


Copyright International Organization for Standardization
Provided by IHS under license with ISO
No reproduction or networking permitted without license from IHS
Not for Resale

1.114932e-002, 3.661908e-003, 3.753066e-002, 6.437036e-003, -3.326154e-002, -3.301663e-002, -2.097325e-002, -1.778645e-002, 5.081909e-003, 1.727430e-002, 2.131317e-002, -5.579479e-003, -3.406331e-002, -4.433552e-002, 5.324345e-004, 3.597067e-002, 5.105095e-002, 4.547136e-002, 5.487062e-002, 6.456189e-002, 3.874317e-002, 1.018246e-002, -1.371565e-003, -5.423531e-003, -1.071636e-002, 3.426954e-003, 2.713461e-002, 1.613032e-004, 2.424687e-003, 1.847517e-002, 2.096755e-002, 9.802970e-003, -8.722611e-003, -1.242193e-002, -7.118539e-003, -1.122722e-002, -3.193738e-002, -5.541798e-002, -3.420108e-002, 1.610713e-002, 3.439419e-002, 5.101408e-003, -6.205101e-003, 6.693060e-003, 7.573691e-004, -2.076359e-002, -2.970159e-002, -4.484640e-002, -9.422931e-003, -8.560864e-003, -3.040157e-002, -2.109253e-002, -4.884773e-004, 3.105193e-002, 9.483864e-002, 9.441366e-002, 1.960258e-002, -6.210340e-002, -6.386711e-002, -4.308090e-003, 5.772406e-002, 2.267934e-002, -3.048203e-002, -2.285308e-002, -2.786167e-002, -6.746857e-002, -1.040470e-001, -6.627079e-002, 1.509348e-002, 3.323865e-002, -4.012862e-002, -1.227206e-001, -5.672856e-003, -3.981832e-002, -8.608586e-002, -6.305286e-002, -3.404912e-002, 2.345433e-002, 1.025497e-001, 7.701365e-002, 1.271129e-002, -2.788459e-002, -6.666434e-002, -6.908855e-002, 2.535093e-002, 6.656190e-002, -4.380422e-003, -6.315704e-002, -6.770641e-002, -8.766884e-002, -1.348001e-001, -6.799259e-002, 7.938364e-002, 6.902006e-002, -6.054096e-002, -1.574495e-001, 1.159265e-002, 1.250026e-003, -1.861520e-002, -5.168554e-003, -3.571484e-002, -3.030054e-002, 2.437706e-002, -2.959853e-002, -1.190847e-002, 6.464239e-002, 9.171843e-002, 2.443006e-002, -1.899620e-003, 3.007190e-002, 3.616898e-002, -3.881783e-002, -7.319290e-003, 2.134763e-002, -2.976247e-002, 8.230070e-003, 6.554026e-002, 3.093251e-002, -1.303282e-002, -1.581203e-002, -9.661352e-003, 6.391639e-002, 9.483572e-002, 8.629671e-002, 5.488972e-003, 5.307281e-003, 2.130840e-002, -1.639115e-002, -1.120386e-002, 1.192289e-002, 7.127155e-003, -2.981596e-002, -6.214871e-002, -4.484806e-002, 2.499058e-002, -3.787859e-002, 8.541207e-003, 5.679441e-002, 2.320269e-002, 2.447955e-003, -2.838606e-002, -2.940835e-002, -1.953678e-003, 4.401206e-002, -4.327604e-002, -2.012216e-003, 4.057263e-002, 4.193951e-002, -1.581840e-003, 2.472752e-003, 4.417714e-002, 6.885623e-002, 5.607904e-002, -1.378453e-002, 6.042395e-003, 8.013063e-002, -1.688740e-002, -3.819595e-002, 4.905851e-002, -7.124786e-003, 4.251613e-002, 8.015438e-002, 4.615170e-002, 2.718500e-002, -3.971510e-002, -5.850881e-002, 4.866413e-002, 1.069836e-001, 2.633384e-003, 1.101817e-002, 2.715442e-002, 4.798101e-002, 1.187527e-002, 9.817481e-003, -1.214514e-002, -4.151885e-002, -1.652243e-003, 3.129008e-002, 4.289173e-002, 1.598868e-002, -5.369879e-002, -4.852541e-002, 5.869237e-002, 1.439893e-002, 3.682855e-002, 2.663745e-002, 1.425646e-002, 4.281289e-002, 2.557519e-002, -6.179788e-002, -3.214599e-002, 2.689562e-002, 3.405989e-002, 3.642897e-002, 2.635880e-004, 3.301791e-002, 2.808944e-002, 3.319943e-002, -2.193762e-002, -9.219437e-002, -1.086806e-001, -9.389355e-002, -8.514639e-002, -9.127785e-002, -1.151336e-001, -6.653063e-002, 8.164717e-003, 2.140113e-002, 1.944292e-002, -7.826366e-003, -1.665199e-002, 3.324975e-002, 5.741202e-002, -2.609085e-002, -7.853040e-002, -8.334373e-002, 1.453715e-002, 2.335649e-002, -3.466537e-002, 2.308179e-003, 2.894900e-002, 5.319769e-002, 3.996111e-002, 1.441628e-003, -1.094312e-003, 9.281855e-003, 6.832513e-003, -6.531309e-003, -1.771737e-002, -1.462020e-002, -1.061084e-002, 2.023873e-002, 1.143521e-004, -2.051659e-002, -2.173916e-002, -3.384050e-003, 4.835417e-002, 4.876371e-002, -3.157368e-003, -3.900774e-002, -1.879206e-002, -1.969904e-003, -4.363421e-002, -4.467346e-002, -1.956185e-002, 1.583322e-002, 4.823628e-002, 5.480186e-002, 7.207055e-002, 9.000676e-002, 9.421353e-002, 9.352114e-002, 7.317077e-002, 3.194252e-002, -2.563765e-003, 2.195944e-002, -1.208622e-002, -1.900692e-002, -9.867642e-003, -3.077629e-004, 2.540445e-002, 3.887511e-002, 3.538639e-002, 1.737811e-002, -2.844754e-002, 1.813732e-003, -2.824853e-002, -3.958323e-002, -5.821726e-002, -6.283990e-002, -3.840063e-002, 1.665147e-003, 4.762659e-002, 7.813652e-002, 8.792391e-002, 1.011878e-001, 7.427946e-002, 1.604704e-002, 1.443045e-002, 2.459806e-002, -1.790913e-003, -9.486103e-003, 4.860004e-004, -6.051638e-003, -1.804848e-002, 1.706511e-002, 1.063162e-003, -1.401109e-002, -1.526301e-002, 3.221319e-003, 7.273006e-004, -3.172323e-002, -4.717909e-002, -8.046536e-002, -9.298897e-002, -6.657453e-002, -2.197289e-002, 2.042626e-002, 4.677698e-002, 5.594535e-002, 3.011723e-002, 3.573099e-003, -7.443289e-003, -6.504695e-003, -5.541226e-003, 1.226653e-002, 1.640314e-002, 2.828449e-005, -5.347881e-002, -1.335756e-002, -1.235169e-002, -4.328617e-002, 2.359999e-003, -7.898204e-005, 1.764879e-002, -2.017604e-002, -4.461278e-002, -6.939103e-002, -9.431298e-002, -8.922150e-002, -5.717901e-002, -1.872517e-002, -1.143588e-002, -1.232272e-002, 1.649243e-002, -1.175583e-002, -6.152225e-002, -3.370152e-002, 8.110513e-003, 5.997450e-002, 4.449483e-002, 1.914145e-002, -3.003073e-002, -3.651129e-002, 5.650220e-003, -4.575069e-002, 1.704512e-002, -8.833377e-003, 2.442809e-002, -5.819636e-003, -4.181381e-002, -6.019758e-002, -8.401446e-002, -1.019395e-001, -9.141949e-002, -6.989224e-002, -6.916305e-002, -2.769680e-002, 4.848323e-002, 7.925602e-003, -2.425868e-002, -3.443419e-002, -2.474924e-002, 4.240280e-002, 4.200148e-002, 1.297994e-002, 3.165800e-002, 3.161067e-003, 3.322464e-002, -1.622797e-002, 7.584107e-003, -3.011807e-002, 1.137079e-002, 6.149461e-004, -2.493833e-002, -3.043402e-002, -4.392808e-002, -6.671941e-002, -7.085730e-002, -5.358962e-002, -3.805991e-002, 1.901445e-002, 6.703143e-002, 1.737337e-002, 4.526806e-002, -1.980682e-002, -8.034132e-002, -1.932969e-002, 1.747386e-002, -3.168105e-002, 3.438154e-002, 6.227223e-002, 6.008911e-002, 3.643918e-002, -


© ISO/IEC 2004 — All rights reserved

Copyright International Organization for Standardization
Provided by IHS under license with ISO
No reproduction or networking permitted without license from IHS
Not for Resale

1.385561e-004, -1.108285e-002, 3.074955e-003, 5.035535e-003, -8.344598e-003, 1.097684e-002, 1.911179e-002, 6.520409e-003, -1.681679e-003, -1.971194e-003, -1.548052e-003, 3.350763e-002, 4.517645e-002, -2.868391e-002, -3.989936e-002, -4.027876e-003, 1.079625e-002, 3.784963e-002, -8.144004e-003, -3.815359e-002, 4.524522e-002, 8.225905e-002, 2.962191e-002, 1.260234e-002, -7.405500e-002, 1.594522e-002, -3.073226e-003, 8.973157e-003, 6.772821e-003, 4.938056e-002, 8.173924e-002, 8.127983e-002, 5.464460e-002, 9.276893e-003, -3.319484e-002, -1.549825e-002, 2.577601e-002, 2.965167e-002, 1.558081e-002, 1.388237e-002, 2.785358e-002, 5.665313e-002, 1.104653e-002, 9.023303e-005, 5.976319e-002, 5.384368e-002, -4.508856e-002, -7.106145e-002, -1.663702e-001, 1.212004e-002, 3.020265e-002, 1.049715e-002, 8.193022e-003, 7.250268e-002, 1.261708e-001, 1.250038e-001, 6.262022e-002, -2.505331e-002, -7.144866e-002, -4.907459e-002, 1.404370e-002, 5.144937e-002, 4.716950e-002, 1.086254e-002, -4.046950e-003, 2.031881e-002, -1.171464e-002, -2.757956e-002, -9.460735e-004, -1.773582e-002, -9.212977e-002, -1.344613e-001}, {3.956694e-002, 5.759892e-002, 5.792298e-002, 2.364626e-002, 1.574615e-002, 3.682750e-002, 5.026154e-002, 3.640927e-002, 1.120653e-002, -2.383775e-002, -5.622346e-002, -8.904662e-002, -9.353471e-002, -6.680471e-002, -2.065529e-002, 1.978927e-002, 3.963117e-002, 3.879396e-002, 3.153104e-002, 2.397664e-002, 1.790269e-002, 2.648554e-002, 3.897948e-002, 5.495590e-002, 1.359285e-002, 9.625255e-003, 9.598431e-003, 4.934156e-004, -1.162927e-003, 1.301729e-002, 1.340188e-002, 1.254709e-002, 2.605168e-002, 3.040237e-002, 2.705618e-002, -7.029838e-003, -5.065221e-002, -5.758148e-002, -2.809608e-002, 1.679800e-002, 4.224444e-002, 2.879609e-002, -4.155875e-003, -3.851960e-002, -3.847990e-002, -1.688819e-002, 2.653573e-002, 6.741460e-002, -1.450624e-002, -3.167735e-002, -2.169730e-002, -1.761685e-002, -2.256844e-002, -1.841839e-002, -3.273879e-002, -3.089205e-002, 3.963519e-003, 5.246102e-002, 8.130486e-002, 7.858020e-002, 2.895715e-002, -2.765892e-002, -3.571262e-002, -1.695086e-003, 2.702582e-002, 1.537647e-003, -6.286773e-002, -1.014113e-001, -7.302920e-002, -2.488541e-002, 2.554480e-002, 5.300299e-002, -3.056304e-002, -3.522259e-002, -1.886444e-002, -1.488862e-002, -2.331654e-002, 9.851719e-004, -3.628673e-002, -8.914434e-002, -6.260181e-002, 1.300726e-002, 7.434545e-002, 7.281659e-002, 4.831563e-003, -9.756606e-002, -1.187843e-001, -4.183145e-002, 3.700287e-002, 2.904299e-002, -3.937907e-002, -6.521739e-002, -2.973897e-002, -8.706572e-003, -1.093997e-002, -2.635787e-002, -7.062950e-003, 9.069956e-005, 2.631876e-003, 7.285943e-003, 2.939549e-003, 3.233898e-002, -5.469076e-002, -1.224299e-001, -9.610751e-002, -2.675029e-003, 6.703354e-002, 8.260534e-002, 4.883562e-002, -3.642377e-002, -1.169382e-001, -3.587181e-002, 8.591631e-002, 1.003819e-001, 2.972610e-002, 4.502377e-003, 1.300458e-002, 1.702962e-002, 5.258185e-002, 7.838705e-002, 3.157849e-002, 2.281357e-002, 1.957150e-002, 2.371628e-003, -1.504313e-002, 3.968021e-003, -5.928200e-002, -5.768792e-002, -2.041055e-002, 7.348449e-003, 5.319519e-004, -1.327228e-002, 1.948489e-002, 5.380337e-002, 2.876970e-002, 4.279988e-002, 1.307966e-001, 1.129508e-001, 3.495553e-002, 2.642304e-002, 4.058772e-003, 2.335347e-002, 7.681344e-002, 1.287665e-001, 3.703840e-002, 1.894385e-002, 2.409910e-002, 4.021615e-003, -9.102831e-003, -1.123884e-002, -3.814631e-003, 2.902020e-002, -2.708528e-004, -1.447678e-002, -3.152070e-002, -5.258583e-002, -7.206300e-002, -3.888931e-003, 7.650722e-002, 4.710540e-002, 9.359130e-002, 7.246632e-002, -5.955086e-004, -2.390738e-003, -1.192292e-002, -3.180459e-002, 2.500845e-002, 7.674380e-002, -1.124389e-002, -5.328892e-002, 2.508277e-004, 5.740859e-002, 3.110008e-002, -3.623494e-002, -4.816956e-002, 8.663280e-003, -3.075398e-002, -3.377796e-002, -1.683717e-002, -8.578832e-003, -1.267712e-002, -4.251837e-002, -2.801779e-002, -9.232846e-002, -3.146859e-002, 1.708688e-002, 3.201040e-002, 2.548942e-002, -2.820523e-002, -2.644311e-002, 3.578685e-002, -5.060251e-003, -2.656084e-002, -4.201394e-002, -1.483233e-002, 3.284584e-002, 3.140587e-002, -2.958940e-002, -2.423432e-002, -1.947955e-002, -2.495444e-002, 9.407370e-002, 1.092181e-003, -1.169118e-001, 1.773585e-002, -4.326110e-002, -7.092548e-002, -1.223510e-001, -8.744500e-002, -4.630472e-002, 1.752355e-002, 5.332745e-002, -4.465553e-002, 1.703614e-002, 2.283782e-002, -3.221717e-002, -1.935049e-002, 5.036934e-003, -1.756957e-002, -5.907608e-002, -4.877106e-002, -1.199707e-002, 2.312798e-002, 2.466561e-002, -1.035661e-002, 1.919330e-002, 7.801544e-004, -4.736129e-003, 3.186753e-002, -1.255888e-002, 1.704756e-002, 5.964126e-003, -2.812826e-002, -6.168924e-002, -3.442888e-002, 5.199180e-002, -3.006760e-002, -3.491807e-003, 2.089386e-002, 8.679741e-003, -8.948254e-003, 3.551858e-002, -9.707811e-003, -6.307420e-002, -6.309342e-002, -1.684538e-002, 1.491083e-002, -3.146863e-003, -2.232227e-002, -2.509348e-002, -1.246461e-002, 4.718158e-003, 1.063028e-002, 1.462699e-002, 1.068260e-001, 1.027182e-001, 3.135646e-004, -3.563316e-002, -6.922065e-002, 1.727822e-002, 4.864111e-003, -4.604519e-002, -2.922495e-002, -2.306658e-002, -2.236908e-002, 7.134183e-003, 2.605095e-003, -2.553579e-002, -3.204492e-002, -5.260869e-003, 3.134183e-003, -2.702710e-002, -5.949889e-002, -6.337407e-002, -3.929809e-002, -1.160624e-002, -2.418031e-003, 3.450852e-002, 1.322916e-001, 7.250159e-002, 4.029884e-004, -6.085737e-003, -5.715860e-002, -3.119949e-002, 3.763630e-002, -2.831932e-002, -7.615821e-002, -7.518884e-002, -1.513460e-002, -2.178486e-002, -5.167519e-003, 9.863335e-003, -1.492010e-002, 1.518959e-002, 2.062454e-002, -4.259300e-004, -2.216879e-002, -1.370756e-002, 1.836411e-002, 2.988223e-002, 8.951434e-003, 3.761102e-002, 9.336678e-002, 4.916678e-003, -2.857681e-003, 1.700834e-002, -2.215286e-003, -5.133081e-002, 1.112441e-002, 7.251954e-002, 1.513646e-002, -2.597545e-002, -

© ISO/IEC 2004 — All rights reserved


Copyright International Organization for Standardization
Provided by IHS under license with ISO
No reproduction or networking permitted without license from IHS
Not for Resale

1.039988e-002, -2.214318e-002, -2.184427e-002, 2.274264e-002, -5.156135e-003, -1.746484e-003, 3.021470e-002, 5.989538e-002, 7.430229e-002, 9.468201e-002, 1.029612e-001, 3.967850e-002, -2.889040e-002, -3.357747e-003, 7.523322e-003, -4.034651e-002, 1.598070e-003, 3.258359e-002, 4.333504e-002, -2.225866e-005, -5.706023e-002, 5.927685e-002, 1.276001e-001, 9.673709e-002, -5.720460e-003, 2.718577e-003, -2.027274e-002, 5.670576e-003, -2.850406e-002, -5.235707e-002, -3.762297e-002, 1.848078e-002, 6.214120e-002, 7.961279e-002, 3.582234e-002, -4.449553e-002, -5.745396e-002, -1.096598e-002, -2.495510e-002, -2.143024e-002, 3.575425e-002, 4.078819e-002, 1.681231e-002, 3.539302e-002, -1.115816e-002, -6.566092e-002, 4.077048e-002, 1.202854e-001, -2.648870e-002, 2.091213e-002, -5.331500e-003, -8.257646e-003, -4.682328e-002, -8.967690e-002, -9.775912e-002, -6.503034e-002, -3.740227e-002, -4.065625e-002, -7.463250e-002, -8.951981e-002, -2.921015e-002, 1.730193e-002, 1.361741e-002, -2.640107e-004, 4.933214e-002, 4.317754e-002, -2.728150e-002, -1.053539e-002, 3.523698e-002, -4.848226e-002, -9.669561e-002, -3.492489e-002, -4.837020e-002, 2.401297e-002, 2.980312e-003, 1.287120e-003, -2.627693e-002, -6.743622e-002, -8.331769e-002, -7.291542e-002, -5.932637e-002, -5.948060e-002, -5.550206e-002, -4.559155e-002, -2.098304e-002, 7.623602e-003, 1.062674e-002, -1.308735e-002, 1.415229e-002, 2.424559e-002, 2.869057e-003, -1.731073e-003, 2.807359e-002, 2.828370e-002, -5.933652e-002, -8.239519e-002, -3.757816e-002, 1.240071e-002, 5.771429e-003, 8.154467e-003, 1.922211e-003, -1.235962e-002, -2.275297e-002, -1.474756e-002, -5.027614e-004, 9.068354e-003, 9.540310e-003, -2.350873e-002, -4.174227e-002, -1.974093e-002, -6.568169e-003, 1.153475e-002, -2.526033e-002, -3.277439e-002, -1.775121e-003, 2.944158e-002, 3.942045e-003, 2.815707e-002, 6.891200e-003, -3.483637e-002, 6.527841e-003, 3.263575e-002, 1.777501e-002, 1.526471e-002, 2.471306e-002, 3.978546e-002, 4.691248e-002, 6.033245e-002, 7.808482e-002, 7.560958e-002, 3.362571e-002, -1.829128e-002, -1.072578e-002, 2.533331e-002, 2.920969e-002, -1.291404e-002, -2.039980e-002, -4.128198e-003, -3.223453e-004, -1.880509e-002, -2.925732e-002, -1.281740e-004, 1.741962e-002, 6.282581e-003, 2.398313e-002, 2.115990e-002, 1.861843e-002, 1.463604e-002, 2.530804e-002, 6.755889e-002, 9.079036e-002, 9.942190e-002, 9.897521e-002, 6.843145e-002, 4.200738e-003, -3.080908e-002, -2.503826e-003, 4.201945e-002, 2.834554e-002, -5.207885e-003, 2.132854e-002, 3.991888e-002, -5.121837e-004, -4.124653e-002, -2.582420e-002, -1.454444e-002, -2.441899e-002, -1.726352e-002, 5.163989e-003, -2.349211e-002, -3.093045e-003, -7.303675e-003, 2.300512e-003, 6.448849e-002, 9.920961e-002, 1.088387e-001, 7.982185e-002, 1.777400e-002, -4.642428e-002, -6.714433e-002, -4.904050e-002, -2.010846e-003, 4.430129e-002, 5.002418e-002, 3.114006e-002, 2.223531e-002, -7.315609e-003, -2.092206e-002, -2.731490e-002, -5.353587e-002, -8.572539e-002, -8.018303e-002},
{1.100301e-001, 7.276922e-002, 1.076980e-001, 1.192807e-001, 1.201598e-001, 1.496320e-001, 1.565512e-001, 8.051504e-002, -2.279460e-002, -1.067580e-001, -1.481028e-001, -1.330514e-001, -6.812208e-002, -4.989346e-003, -2.013110e-003, -5.031192e-002, -7.314355e-002, -6.801682e-002, -1.933420e-002, 7.109738e-002, 1.261485e-001, 1.239367e-001, 9.421936e-002, 6.408175e-002, 3.808611e-002, -7.120288e-003, 1.798768e-002, 1.304634e-002, 1.719423e-003, 3.139707e-002, 5.171210e-002, 1.479687e-003, -5.367625e-002, -9.463256e-002, -1.053512e-001, -6.749885e-002, 1.458427e-003, 6.139009e-002, 5.510784e-002, -1.581679e-002, -7.942228e-002, -9.406671e-002, -4.597545e-002, 4.417162e-002, 9.162212e-002, 6.292479e-002, -9.642704e-003, -5.661209e-002, -1.867921e-002, -6.778593e-002, -6.779670e-002, -7.631623e-002, -8.142013e-002, -4.085409e-002, -2.004931e-002, -1.545070e-002, 2.075770e-003, -1.512879e-002, -3.556456e-002, -2.390295e-002, 3.565018e-002, 1.063488e-001, 1.170536e-001, 3.418572e-002, -5.098930e-002, -7.854741e-002, -3.646481e-002, 3.236986e-002, 5.446762e-002, 2.032722e-002, -4.265448e-002, -7.018197e-002, -4.945357e-002, -7.512482e-002, -7.634161e-002, -3.335635e-002, -9.571956e-003, -3.712867e-002, -6.616882e-002, -3.966874e-002, 1.689426e-002, 2.688160e-002, -1.314608e-002, -6.260784e-002, -6.486894e-002, -6.881484e-004, 6.212071e-002, 2.703485e-002, -2.255536e-002, -3.995127e-002, -2.214886e-002, 1.564136e-002, 3.364832e-002, 1.945058e-002, 2.415066e-003, -2.007614e-002, -2.858091e-002, -6.747191e-003, -1.627103e-002, 4.165148e-002, 2.360206e-002, -4.480830e-002, -2.370989e-002, 1.807123e-002, 3.159981e-002, 4.362862e-003, -1.675017e-002, -5.000537e-003, 2.597621e-002, 5.024027e-002, 4.745137e-002, 4.136948e-002, 4.844588e-002, 5.127264e-002, 3.011716e-002, 4.746141e-003, 9.998383e-005, -2.202809e-002, -6.175586e-002, -8.954283e-002, 5.880612e-003, 2.391600e-002, 3.969890e-003, 3.232061e-003, -3.584173e-002, -3.340156e-002, 3.955257e-002, 8.505643e-002, 7.380817e-002, 3.180887e-002, -3.489517e-003, 4.079366e-003, 3.262176e-002, 5.971149e-002, 3.670381e-002, 1.128258e-002, 4.362697e-002, 6.494902e-002, 3.132418e-002, -5.645937e-003, 2.003358e-002, 6.253838e-002, 5.932057e-002, 1.030362e-002, 4.054588e-002, 3.048182e-002, -5.708226e-003, -4.695321e-002, -2.977284e-002, 2.680323e-003, 1.401090e-002, -7.965731e-004, -4.513119e-003, -2.574509e-002, -2.457680e-002, 3.553680e-002, 2.348807e-002, -1.139937e-002, -3.191464e-002, -4.948531e-002, -5.679949e-002, -4.518117e-002, -2.400428e-002, -3.077962e-002, 1.739881e-002, 6.038353e-002, 1.996422e-002, -3.893036e-002, 3.643810e-002, 4.545360e-003, 1.006481e-002, 1.783180e-003, 2.216200e-002, 5.253108e-002, 1.899973e-002, 1.980059e-002, 4.072581e-002, -7.777360e-002, -9.240729e-002, 6.939216e-003, 3.816736e-002, -5.882143e-002, -6.436863e-002, -1.495734e-002, -5.175751e-002, -4.380491e-002, -3.633433e-002, -3.229371e-002, -7.125065e-002, -8.397745e-002, -3.842501e-002, 1.403588e-002,


© ISO/IEC 2004 — All rights reserved

Copyright International Organization for Standardization
Provided by IHS under license with ISO
No reproduction or networking permitted without license from IHS
Not for Resale

1.167117e-002, 2.718315e-003, 4.346062e-002, 7.886694e-003, -1.262796e-002, 3.184560e-002, 4.893077e-002, 1.440502e-002, -4.573462e-004, 2.278033e-002, -2.466117e-002, -5.259746e-002, 1.140843e-002, -4.338608e-002, -1.692477e-002, 2.391143e-002, -2.739887e-002, 6.773129e-003, -8.053467e-003, -3.568442e-002, -9.117970e-002, -6.240645e-002, -2.892960e-002, 7.738211e-003, -1.983415e-002, -8.721939e-003, 4.170562e-002, 1.614035e-002, -4.822265e-002, -4.787152e-002, -1.229770e-002, 2.090052e-002, 4.264031e-002, 3.714373e-002, 3.024079e-002, 2.514329e-002, -1.366275e-002, -3.732561e-002, 1.233884e-002, 1.119381e-002, -8.386455e-003, 1.572859e-002, 3.503187e-002, 2.073362e-002, 7.010510e-003, 2.823198e-002, 3.941947e-002, 1.974710e-002, -8.103831e-003, 6.843807e-003, 2.514748e-002, 5.695985e-002, 1.832605e-002, -8.236294e-003, -3.673570e-002, -5.032478e-002, -3.533493e-002, -3.250088e-003, 2.542166e-002, 3.630913e-002, -6.308870e-003, -3.729423e-002, 1.521362e-002, -1.105353e-002, -8.343951e-003, -5.048176e-004, 3.893241e-002, 5.846690e-002, 2.185801e-002, 4.663304e-002, 3.858340e-002, 2.086394e-002, 2.743846e-003, 1.230184e-002, -7.013950e-003, 4.982008e-002, 9.930738e-002, 6.029891e-002, -1.443941e-003, -4.473132e-002, -5.717445e-002, -3.495206e-002, -5.270915e-003, -5.880119e-005, -2.741163e-002, -2.801453e-002, -1.157707e-002, -2.378713e-002, -3.376939e-003, -2.102933e-002, 5.964621e-003, 5.218797e-002, -1.898221e-002, 2.246419e-002, 2.592649e-002, -7.400328e-003, 1.439575e-002, 1.042180e-002, -2.171314e-002, -1.433800e-002, 9.343948e-002, 8.672477e-002, 2.755233e-002, -1.774390e-002, -2.797853e-002, -8.063534e-003, 8.950978e-003, 1.234947e-002, -8.657624e-003, -2.387628e-005, -1.284485e-002, 9.709656e-003, 2.025451e-002, -1.886902e-002, -2.172168e-002, 1.797759e-002, -3.818195e-002, -3.057348e-002, 1.707308e-002, -3.810031e-003, 9.212012e-003, -7.160150e-003, -3.305649e-002, -5.571219e-002, 3.740336e-003, 2.443430e-002, -2.228843e-003, -1.394552e-002, -8.246557e-003, 1.366215e-002, 2.598365e-002, 3.356671e-002, 3.077636e-002, 1.550771e-002, 3.377659e-003, 4.262844e-002, 3.864317e-002, -6.494507e-003, -1.838977e-002, -1.468399e-002, -1.512925e-002, -4.322836e-002, -1.956232e-002, -1.088527e-002, 2.425367e-004, -2.306713e-002, -2.638077e-002, -4.874963e-002, -5.200349e-002, -4.758912e-002, -4.195162e-002, -2.456098e-002, -4.829219e-003, 1.640597e-002, 3.206555e-002, 5.661325e-002, 5.175327e-002, 3.073325e-002, 1.100865e-002, 4.976468e-002, 3.478343e-002, -8.442449e-003, 6.799639e-004, -9.977355e-003, -2.249511e-002, 2.366128e-002, 1.489295e-002, -9.467541e-004, -2.995183e-003, -1.983093e-002, -1.532468e-003, -1.657868e-002, -2.464660e-002, -4.166845e-002, -5.474555e-002, -3.963593e-002, -2.279855e-002, -6.786118e-004, 2.382372e-002, 3.828974e-002, 2.598278e-002, 2.595069e-002, -3.086609e-002, 9.104282e-003, 2.535264e-002, -1.803476e-002, -1.235031e-002, 2.501897e-002, -1.251626e-002, 5.572907e-002, 5.147481e-002, 1.675556e-002, -2.115170e-002, -2.133226e-002, 2.520352e-002, 2.699392e-002, 1.582023e-002, 8.878931e-004, -1.797878e-003, 6.043402e-003, 2.369846e-002, 4.185403e-002, 3.106458e-002, -1.509103e-003, -8.320343e-003, 1.567092e-002, -4.040976e-002, 2.708842e-002, 3.113043e-002, -4.098039e-002, -5.023283e-002, 2.067539e-002, -1.762002e-002, 4.853085e-002, 4.699700e-002, 5.879185e-005, -1.809674e-002, -3.567577e-003, 3.387144e-002, 4.871144e-002, 4.307068e-002, 2.992694e-002, 3.672333e-002, 5.571318e-002, 6.525499e-002, 5.515254e-002, 8.639666e-003, -4.154897e-002, -5.065146e-002, 1.190311e-003, -4.978923e-004, 3.251898e-002, 1.680857e-002, 2.226474e-003, -2.156139e-002, -3.710043e-002, -8.735220e-002, 6.338302e-003, 6.584152e-003, -5.319055e-002, -8.252830e-003, 2.793088e-002, 2.793435e-002, 2.725852e-002, 2.682457e-002, 1.050006e-002, 1.754731e-002, 3.698190e-002, 3.839182e-002, 1.358186e-002, -1.903934e-002, -3.808175e-002, -5.091161e-002, -2.640793e-002, -2.208440e-002, -3.986371e-002, -3.942635e-002, 2.129955e-002, 1.805325e-002, 1.686901e-002, -4.995596e-004, 3.381939e-002, -2.374535e-002, -9.630877e-002, -1.961822e-002, 1.627234e-002, -1.639538e-003, -2.524023e-002, -1.743948e-002, -3.421632e-002, -4.405801e-002, -2.619359e-002, -2.389709e-002, -2.341813e-002, -1.306955e-002, -5.384846e-003, 1.020980e-002, 1.528307e-002, -8.076180e-005, -8.107358e-002, -9.227433e-002, -3.256509e-002, -4.548200e-002, 3.721885e-003, 5.367743e-002, 5.290856e-002, -3.772590e-002, -1.218196e-001, -3.432221e-002, 1.980265e-002, -1.989105e-002, -7.070420e-002, -6.787949e-002, -7.861389e-002, -9.232102e-002, -8.005684e-002, -6.304784e-002, -4.202625e-002, -1.057226e-002, 4.239993e-002, 1.006043e-001, 1.283506e-001, 1.127035e-001, 2.303571e-002, -2.363674e-002, 4.161967e-003, 1.314844e-002, 7.582878e-002, 1.077717e-001, 6.013806e-002, -3.475032e-002, -1.154581e-001},
{8.490152e-002, 2.858122e-002, 5.499362e-002, 7.591339e-002, 1.058820e-002, -9.578917e-003, -4.862065e-002, -1.281272e-001, -1.727031e-001, -1.475791e-001, -9.918206e-002, -4.126976e-002, -9.032932e-004, 2.545606e-002, 3.258702e-002, 2.153274e-002, 1.278417e-003, -1.567350e-002, -1.086277e-002, 8.445255e-003, 1.085294e-002, -1.134752e-002, -4.721087e-002, -7.995451e-002, 5.152672e-002, 4.289813e-004, 3.558144e-002, 4.892330e-002, 6.533121e-003, 4.735992e-002, 5.572411e-002, 6.604567e-003, -4.904622e-003, 1.363502e-002, 1.603100e-002, 1.702818e-002, 1.646477e-002, 2.439911e-002, 3.961403e-002, 2.833876e-002, 2.481138e-002, 1.827126e-002, 1.891897e-002, 4.033298e-002, 4.990348e-002, 3.719275e-002, -6.163768e-003, -4.581219e-002, 1.913991e-003, -2.719494e-002, 1.356058e-002, 1.509058e-002, 2.266067e-003, 7.409728e-002, 5.791865e-002, -3.135544e-003, -5.769046e-003, -1.032186e-002, -3.345172e-002, -4.947696e-002, -4.245632e-002, -3.868496e-002, -1.539547e-002, -4.781973e-003, 7.522654e-003, 4.006718e-003, 6.839286e-003, 2.400959e-002, 3.989231e-002, 2.092932e-002, -4.191891e-002, -9.005334e-002, -

© ISO/IEC 2004 — All rights reserved


Copyright International Organization for Standardization
Provided by IHS under license with ISO
No reproduction or networking permitted without license from IHS
Not for Resale

1.876198e-002, -2.893361e-002, -1.896995e-003, 1.754643e-004, -1.349756e-003, 6.305904e-002, 8.466360e-002, 5.730815e-002, 1.259628e-002, -5.787801e-002, -7.259557e-002, -1.864210e-002, 4.935399e-002, 5.445323e-002, 1.716249e-002, -8.889654e-003, -1.579775e-002, -4.657452e-002, -4.162676e-002, 4.049567e-003, 4.786363e-002, 5.391627e-002, 2.786809e-002, -6.030323e-003, 9.574024e-003, -6.226318e-003, 2.875368e-003, 1.448120e-002, 4.003080e-003, 6.940134e-002, 1.240704e-001, 1.189809e-001, 5.653002e-002, -3.847527e-002, -5.582391e-002, -9.424590e-003, 4.715974e-002, 7.850733e-002, 6.408181e-002, 1.651472e-002, -4.508755e-002, -9.635125e-002, -8.475105e-002, -1.133807e-002, 5.670177e-002, 5.507244e-002, 6.858882e-003, -2.105794e-002, 2.412867e-002, -5.782230e-003, -2.173161e-003, -1.033327e-002, -5.219346e-002, -4.386535e-002, -2.558210e-002, -2.914526e-002, -2.690438e-002, -5.963622e-003, 7.070599e-003, 4.790968e-003, -1.938910e-002, -2.236213e-002, 2.826124e-003, 5.597548e-003, -3.479342e-002, -8.243027e-002, -5.526889e-002, -5.255188e-003, 1.471177e-002, -1.403649e-002, 6.709721e-003, 4.916716e-002, 3.454213e-002, 2.099267e-002, 1.582364e-002, -1.019860e-002, -4.009456e-002, -5.396592e-002, -5.100180e-002, -3.444586e-002, 3.211804e-002, 4.428875e-002, 3.479113e-002, -1.505449e-002, -1.241552e-001, -1.377876e-001, -4.190539e-002, 5.802398e-003, 5.582013e-002, 2.602916e-002, 1.861744e-002, 1.093568e-002, -9.547383e-002, -1.058326e-001, 1.870143e-002, 1.154726e-001, 2.406068e-002, 4.823923e-003, 4.967223e-002, 6.153302e-002, 3.741257e-002, 3.276039e-002, -6.158243e-004, -6.663351e-002, -9.693165e-003, 2.903939e-002, 2.285546e-002, -3.844967e-003, -1.399918e-001, -8.075330e-002, 5.720835e-002, -1.249993e-003, 6.396966e-002, 1.135858e-002, 1.309474e-002, 1.942875e-002, -7.473379e-002, -7.797185e-002, -1.830205e-002, 3.950812e-002, -1.417592e-002, -4.350632e-002, -1.282590e-002, -3.515837e-002, -2.310084e-002, 1.341202e-002, 3.033029e-002, 4.482760e-002, 3.219358e-002, -3.310040e-002, -1.127884e-002, 9.234077e-002, -5.962141e-003, 5.333674e-002, 1.219628e-001, 2.323464e-002, 6.602973e-002, -1.514219e-002, -9.227098e-003, 9.691486e-002, 5.109627e-002, 7.006700e-003, 7.409804e-002, 1.642445e-002, -2.448065e-002, -4.841740e-002, -9.425506e-003, -7.934327e-003, -1.452248e-002, -9.173903e-003, -1.947165e-002, 2.015651e-002, 5.453564e-002, 1.593243e-002, 1.837975e-003, -1.185067e-002, -4.742250e-002, -1.494933e-002, -2.328453e-002, 3.120837e-002, 3.447836e-002, -4.403096e-002, -3.539740e-002, 4.652001e-002, -2.685894e-004, -5.003405e-002, 4.448584e-003, 4.981860e-002, -1.080816e-002, -1.064765e-002, -4.122256e-003, 1.248433e-002, 1.082621e-002, -1.761243e-002, -5.863582e-002, -2.999641e-002, 2.313132e-002, 4.229833e-002, 2.152504e-002, -2.582091e-002, -7.823389e-002, -1.114025e-001, -1.438010e-001, 3.036826e-002, -3.220921e-003, -5.672338e-002, -4.211137e-002, -2.893672e-002, -6.737639e-002, -1.081363e-001, -4.270058e-002, 3.342830e-002, 2.122122e-002, 1.647430e-002, -7.911877e-003, -5.989082e-004, 3.275212e-002, -1.277292e-002, -5.458692e-002, -3.379791e-002, 2.160205e-002, 3.925407e-002, 2.457848e-002, -7.917303e-003, -5.315211e-002, -1.351232e-001, -1.000978e-001, 9.135986e-003, -2.094253e-002, -4.029786e-002, -1.474235e-003, -2.133106e-002, -7.266988e-002, -1.016606e-001, -2.550910e-002, 3.388452e-002, 2.525401e-002, 2.891521e-002, 1.941244e-003, -3.704313e-002, 2.114117e-002, -5.052447e-003, -4.491566e-002, -2.657279e-002, 2.278150e-002, 3.820011e-002, 3.310074e-002, 2.415966e-002, -1.199612e-002, -6.924650e-002, -9.277059e-003, -2.383549e-002, -1.171405e-002, -7.407298e-003, 4.297648e-002, 4.876563e-002, -4.590400e-002, -5.089311e-002, 8.934029e-003, 6.108919e-002, -4.482141e-003, -5.013123e-003, 4.844116e-003, -2.497760e-002, -1.006314e-002, -2.089972e-002, -3.317654e-002, -8.438946e-003, 2.862660e-002, 4.601033e-002, 4.679493e-002, 5.030522e-002, 2.934137e-002, 2.858015e-002, -1.704110e-002, -3.737510e-002, -6.586913e-003, -1.281023e-002, 1.672771e-002, 7.594631e-002, 1.329690e-002, -1.863224e-002, 6.717978e-002, 1.006479e-001, -4.725467e-002, -4.740823e-002, -2.444499e-003, -9.024915e-003, 7.381010e-003, -1.243550e-002, -3.953353e-002, -2.967383e-002, -1.608191e-002, -1.228591e-003, 2.130373e-002, 4.715258e-002, 8.195225e-002, 5.578944e-002, -3.461911e-002, -3.401026e-002, -4.810272e-003, -2.451539e-002, -5.736346e-002, 6.170958e-003, 5.548880e-002, -9.973787e-003, 6.452839e-002, 1.327951e-001, -4.250580e-002, -5.655511e-002, -1.180690e-002, -1.142310e-002, 1.711643e-002, 1.360693e-002, 4.719250e-003, 2.519068e-002, 4.143361e-002, 4.641953e-002, 3.587366e-002, 1.601677e-002, 3.632812e-002, 7.949418e-002, 2.952945e-002, 9.679071e-003, 4.458721e-003, 1.516841e-002, -4.461385e-002, -4.749709e-002, 8.061558e-002, 3.893383e-002, 1.725299e-002, 1.095055e-001, 1.219944e-003, -1.586049e-002, 3.579492e-003, -1.976343e-002, -6.022103e-003, -5.444814e-003, -5.846637e-003, 3.343698e-002, 4.259096e-002, 2.191932e-002, -3.222756e-002, -9.633800e-002, -4.995377e-002, 3.474148e-002, 4.046972e-002, 1.326270e-002, 3.012679e-003, 3.179758e-002, -6.477188e-003, -5.509376e-002, 2.319448e-002, 3.025747e-002, -4.773282e-002, 2.031097e-002, 1.041190e-002, 2.472564e-002, 1.965550e-002, -1.788205e-002, -1.943325e-002, -3.433011e-002, -4.110851e-002, -8.148879e-003, 9.547004e-003, -1.266484e-004, -3.835315e-002, -7.719410e-002, -5.034598e-002, -3.822086e-002, -1.533516e-002, 5.092992e-002, 6.927156e-002, 3.247003e-002, -1.052149e-002, -1.614514e-002, -2.460179e-002, -5.406654e-002, -6.394093e-002, -1.389178e-002, -1.272962e-002, 2.081148e-002, 2.526008e-002, -7.115163e-003, -9.527982e-003, -3.123015e-002, -4.826222e-002, -3.626032e-003, 3.550290e-002, 4.808641e-002, 2.912950e-002, 1.722504e-002, 2.686322e-002, 6.715058e-003, -5.584754e-002, 3.379477e-003, 5.694461e-002, 4.762189e-002, 7.146961e-003, -9.235680e-003, -7.991893e-003, -4.026789e-002, -7.070920e-003, 4.562737e-002, -


© ISO/IEC 2004 — All rights reserved

Copyright International Organization for Standardization
Provided by IHS under license with ISO
No reproduction or networking permitted without license from IHS
Not for Resale

2.122419e-002, 7.908613e-003, 1.375109e-002, 5.824633e-004, 1.040787e-002, -9.523259e-003, -3.793054e-002, 5.816837e-003, 6.346268e-002, 7.246821e-002, 4.380969e-002, 1.803221e-002, 4.443614e-002, 6.316057e-002, 1.466517e-002, -2.532044e-002, -3.473975e-002, 1.025908e-002, 2.458621e-002, 1.202253e-002, 1.627208e-003, -1.270999e-002, 4.517553e-002, 1.062778e-001, 2.876890e-002, 2.127388e-002, -5.719331e-004, 1.902607e-003, 1.930554e-002, 1.915441e-002, -1.862915e-002, 2.853901e-003, 5.211649e-002, 2.996739e-002, -2.790191e-002, -5.710805e-002, -5.189794e-002, -4.385210e-002, -3.355872e-002, -1.536266e-002, -6.145547e-003, 1.020915e-002, -3.929923e-002, -7.576930e-002, -8.858451e-002, -5.863594e-002, 1.390050e-002, 9.184717e-002},
{-3.488638e-002, -1.312304e-002, 2.972056e-002, 5.214618e-003, -4.212263e-002, -6.873368e-002, -4.984369e-002, -1.295001e-002, 3.077912e-003, -1.013647e-002, -1.957871e-002, 1.185263e-002, 6.381179e-002, 9.769025e-002, 1.021024e-001, 7.177832e-002, 5.570552e-002, 2.856757e-002, 2.435947e-002, 7.294752e-002, 1.003151e-001, 6.369152e-002, -4.028686e-003, -3.190966e-002, -7.104128e-003, -1.308957e-002, -2.565550e-003, -1.104351e-002, -1.986359e-002, -2.019606e-002, 5.557370e-003, 2.579527e-002, 1.777383e-002, -1.322426e-002, -4.235502e-002, -3.246725e-002, 1.665118e-002, 5.759049e-002, 6.476863e-002, 3.355492e-002, -6.103978e-003, -5.255606e-002, -7.436139e-002, -2.075603e-002, 5.356609e-002, 3.656918e-002, -4.034542e-002, -7.361353e-002, 3.233227e-002, -5.805467e-003, -2.450590e-002, -4.268074e-004, 3.192507e-002, 4.455857e-003, -6.053136e-003, -1.743678e-003, 2.112310e-002, 4.132756e-002, 3.303258e-002, 1.414737e-002, -4.977230e-003, -2.384028e-003, -1.082126e-002, -4.097849e-002, -8.580247e-002, -1.558364e-001, -1.939411e-001, -1.236885e-001, -1.805524e-002, 2.366539e-002, 2.540107e-002, 3.803586e-002, 6.175637e-002, 6.123167e-003, -2.603857e-002, 1.036399e-002, 4.019930e-002, -1.368813e-002, -4.260802e-002, -3.264290e-002, 1.491450e-002, 4.989573e-002, 4.338223e-002, 1.261074e-002, -3.565586e-002, -6.407838e-002, -5.814827e-002, -3.961859e-002, -5.887470e-002, -1.213634e-001, -1.680962e-001, -1.019607e-001, -5.168860e-002, -2.722240e-002, 6.624278e-003, 6.455645e-002, 6.295353e-002, 2.274567e-002, 7.286758e-003, 5.281798e-003, 2.330584e-002, 1.606952e-002, 3.713692e-003, -7.986035e-003, -1.055758e-002, -7.153729e-003, -1.468504e-002, -4.812649e-002, -8.359373e-002, -9.170174e-002, -3.410249e-002, 6.889317e-002, 9.139292e-002, 5.185918e-002, 4.044255e-002, 6.244262e-002, -3.126207e-002, -1.066404e-001, -4.689703e-002, 7.165929e-002, 3.022007e-002, 4.585555e-002, 5.914412e-002, 1.235527e-002, 2.862324e-002, 4.271391e-002, 4.734966e-002, 6.818084e-003, -5.183506e-002, -6.119650e-002, -2.147868e-003, 4.933560e-002, 3.210508e-002, -1.901794e-002, 1.340456e-002, 1.214806e-001, 9.910593e-002, 5.854282e-002, 1.374601e-001, 1.798239e-001, -1.506241e-002, -7.964063e-002, 4.283705e-002, 1.448715e-001, -4.513458e-002, -7.855487e-005, 5.354370e-002, -2.777041e-002, 5.421645e-005, 5.336450e-002, 5.138619e-002, 3.915711e-002, -6.945811e-003, -3.497530e-002, -2.788867e-002, -2.942404e-003, 7.116437e-002, 4.915327e-002, -6.134001e-003, 1.406689e-002, -1.259073e-001, -1.996248e-001, -1.866780e-002, 7.326154e-002, -5.635452e-002, -2.971704e-002, 1.446912e-002, 3.016687e-002, -4.336371e-002, -5.381942e-002, -1.117997e-002, -5.038972e-002, -2.295258e-003, 2.078209e-002, 4.971417e-002, 3.833265e-002, -4.417444e-004, 3.808721e-002, 2.226045e-002, -1.168992e-002, 5.479572e-002, 2.023598e-002, 2.945892e-003, 7.613264e-002, -1.294966e-002, -4.371552e-002, 4.710582e-002, 2.116353e-002, -1.102725e-002, 7.208227e-002, 7.813145e-002, -1.482005e-002, 6.606018e-003, -4.549663e-003, 1.129185e-002, 2.610948e-002, 1.303611e-002, -4.290860e-003, 1.629685e-002, 8.899198e-003, -5.722932e-002, -7.192956e-003, -2.243961e-002, -2.610446e-002, 9.966298e-003, -6.217284e-002, -8.368372e-002, 3.764809e-002, 2.264007e-002, 4.372545e-002, 4.804608e-002, -8.064495e-002, -8.367973e-002, 6.383659e-002, 7.682262e-002, 7.257670e-003, -6.520872e-003, -2.590599e-002, -6.131353e-002, 8.905232e-004, 1.490098e-002, 3.856954e-002, 3.980853e-004, -3.361520e-002, -3.378348e-002, -2.798062e-002, -3.107004e-002, -3.212805e-002, -4.769832e-002, -9.221600e-002, -9.941446e-002, -5.738132e-002, -3.379143e-003, 3.432210e-002, 9.484713e-003, -9.972411e-002, -1.427088e-001, -4.072078e-002, -6.919070e-002, -1.116621e-001, -1.432539e-002, -1.858080e-002, -4.295606e-002, -1.265626e-003, -1.211607e-002, -2.320551e-003, 8.919254e-003, 1.679205e-002, 2.799843e-002, 3.764332e-002, 5.362712e-002, 4.955140e-002, -6.362768e-003, -3.792157e-002, -1.419964e-002, -4.924871e-002, 8.108603e-003, 1.467544e-002, -1.353479e-002, -5.112451e-002, -8.348342e-002, -2.228504e-002, -9.186123e-003, -3.673168e-002, -1.671882e-002, 1.398767e-002, 7.541709e-003, 2.131983e-002, -1.634629e-002, -5.045770e-002, -1.645092e-002, 3.177846e-002, 5.588417e-002, 6.888491e-002, 6.270880e-002, 2.782856e-002, -1.791443e-002, 4.751702e-004, 1.937495e-002, -1.802656e-002, 3.483163e-002, 1.270375e-002, -3.337843e-002, 7.574556e-003, 1.565675e-002, -5.261340e-003, 1.929148e-002, 2.656685e-002, -1.727039e-002, 3.354720e-002, 3.079927e-002, 4.312562e-002, -1.414441e-002, -6.440479e-002, -7.191252e-002, -2.824880e-002, -3.580122e-003, 7.612988e-003, 3.297722e-004, -2.641565e-002, -2.401306e-002, 2.872580e-002, 1.979505e-002, 8.181909e-003, 5.417151e-002, 2.018010e-002, -4.202087e-002, 2.021337e-002, 6.398551e-002, 4.949524e-002, 1.922529e-002, 1.288569e-002, 1.131810e-002, 2.573493e-002, 3.120410e-002, 3.408201e-002, 2.005710e-002, -2.424958e-002, -2.816865e-002, -2.819883e-002, -2.957702e-002, -2.989751e-002, -2.514603e-002, -1.939224e-002, 2.832185e-002, 3.720536e-002, -2.357497e-003, -2.790354e-003, 3.545546e-002, 2.828137e-002, -1.826044e-002, -5.296135e-003, 4.931883e-002, 4.717529e-002, 2.635328e-002, 1.232366e-002,

© ISO/IEC 2004 — All rights reserved


Copyright International Organization for Standardization
Provided by IHS under license with ISO
No reproduction or networking permitted without license from IHS
Not for Resale

3.456475e-002, 8.498160e-003, 6.184982e-003, 2.586490e-002, 1.785701e-002, 2.163546e-002, 4.372438e-002, 6.476952e-002, 6.001010e-002, 5.128963e-002, 3.591531e-002, 2.626416e-002, 2.622799e-002, -6.876982e-003, -4.654757e-002, -3.322370e-002, 5.372950e-003, 2.658239e-002, 2.661605e-002, 3.854696e-003, -7.291884e-004, 2.446209e-002, 2.097204e-002, 1.031427e-003, 3.165942e-002, -1.515927e-002, -1.381797e-002, 9.405426e-003, 7.093894e-003, 1.844201e-002, 4.078909e-002, 5.629415e-002, 5.530822e-002, 4.439841e-002, 4.841696e-003, 2.627363e-003, 2.181671e-002, -2.900393e-002, -4.374121e-002, 9.115668e-003, -1.612929e-003, -1.437635e-002, 1.964016e-002, 3.400200e-002, -7.107349e-003, -1.525412e-002, 2.468815e-002, 1.691945e-002, 1.080237e-002, -2.130340e-002, -2.599841e-002, -2.701999e-003, -4.509556e-003, -2.013488e-003, 5.876705e-004, 1.823627e-004, -4.336531e-003, -2.242250e-002, -1.373820e-002, 1.341737e-002, 4.175435e-002, 8.469980e-003, 8.826850e-003, 4.789421e-002, -2.666984e-002, -6.614838e-002, -6.055703e-002, 1.134124e-003, 4.183641e-003, -2.394718e-003, 1.653170e-002, 5.524454e-003, 1.390697e-003, -5.466748e-005, -3.858623e-003, -7.481181e-003, -3.388034e-003, -6.757775e-003, -1.683633e-002, -2.416599e-002, -2.558823e-002, -1.837289e-002, 8.598847e-003, 2.849749e-002, 5.735445e-002, 2.370076e-002, -2.678062e-002, -1.450160e-002, -2.946436e-002, -3.055009e-002, -3.879696e-002, -6.903137e-003, 3.095462e-002, 5.560713e-002, 5.117815e-002, 1.402109e-002, 2.988013e-003, 4.544467e-002, 1.170994e-002, -2.825046e-002, -5.030488e-003, 2.078199e-003, -6.345911e-003, -6.233465e-003, 2.657748e-004, 1.098511e-002, 1.918784e-002, 2.411613e-002, 3.810592e-002, 4.621799e-003, -3.955619e-002, -3.032529e-002, -3.964487e-003, -1.219785e-002, -4.387748e-002, -4.658732e-002, 3.021988e-002, 7.390004e-002, 5.910028e-002, 3.483629e-002, -5.069668e-002, 3.724595e-002, 2.615881e-002, -5.435294e-002, -2.244284e-002, 7.098122e-003, 6.433881e-003, 1.172655e-002, 1.530420e-002, 2.089355e-002, 1.208517e-003, -1.431327e-002, -1.800562e-002, -6.858114e-003, 3.402429e-003, 2.230550e-002, 5.048404e-003, -6.977837e-004, -3.948796e-002, -1.808368e-002, 1.952252e-002, 2.061910e-002, 1.343073e-002, 8.235096e-003, -1.434048e-001, -6.065959e-002, -2.808264e-003, -7.646002e-002, -5.383004e-002, -9.704599e-004, 8.395955e-003, 1.770380e-002, 2.051316e-002, 5.311832e-003, -3.516212e-002, -5.841752e-002, -6.178222e-002, -3.441343e-002, -2.361827e-002, -2.249412e-002, -2.635547e-002, -1.051147e-002, -2.134499e-002, -1.514108e-002, -6.431656e-003, -2.204483e-002, -3.888675e-002, -3.364335e-002},
{-1.051796e-002, -4.484895e-003, -1.152914e-002, -1.493583e-002, -8.128399e-003, 1.264108e-002, 2.683186e-003, 2.613192e-003, -1.070005e-003, -4.463858e-003, 2.333907e-003, -2.209229e-002, -5.306748e-002, -7.846812e-002, -7.262581e-002, -2.721156e-002, 7.941322e-003, 4.876240e-002, 6.204622e-002, 2.632867e-002, 1.095756e-003, 3.549066e-002, 1.122493e-001, 1.612699e-001, 3.594355e-003, 1.810725e-003, -4.336402e-003, 1.304630e-003, -5.426396e-004, 1.760650e-002, -1.254476e-003, -5.601244e-003, 4.983076e-003, 4.357925e-002, 7.986961e-002, 6.316926e-002, -2.532551e-003, -7.600520e-002, -9.929413e-002, -5.892555e-002, -9.993028e-003, 2.911756e-002, 2.843093e-002, -2.766155e-002, -9.565510e-002, -8.694311e-002, 2.164232e-002, 1.247058e-001, 1.849320e-002, 2.957939e-003, -7.753014e-003, -1.084196e-003, -1.418192e-002, -7.372336e-003, -3.924160e-002, -4.896571e-002, -2.357158e-002, 3.332835e-002, 7.269273e-002, 7.766765e-002, 3.317616e-002, -5.672387e-002, -9.333292e-002, -4.629523e-002, 1.187955e-002, 6.013862e-002, 5.120282e-002, -2.676113e-002, -1.161942e-001, -9.576321e-002, 2.993315e-002, 1.559245e-001, 1.026554e-002, -1.509595e-002, -1.753290e-002, 1.058127e-003, -1.019534e-002, 1.468358e-002, 3.459572e-003, -1.566157e-002, -1.462593e-002, 4.170737e-002, 8.569129e-002, 6.349556e-002, -1.467303e-002, -9.920123e-002, -1.094489e-001, -3.597127e-002, 4.755900e-002, 1.034065e-001, 8.125596e-002, -2.896277e-002, -1.122410e-001, -6.304980e-002, 5.397802e-002, 1.337710e-001, -1.831619e-002, -1.686855e-002, -1.911893e-002, 1.187640e-002, -1.305022e-002, 7.412808e-003, -1.991374e-002, -5.278427e-002, -3.618982e-002, 3.274410e-002, 9.687701e-002, 1.153563e-001, 4.424959e-002, -6.043530e-002, -1.045347e-001, -4.289592e-002, 4.864956e-002, 9.054273e-002, 4.039557e-002, -6.850694e-002, -1.120933e-001, -2.640134e-002, 3.647265e-002, 4.943780e-002, -3.618078e-002, -2.088736e-002, -3.890598e-003, -2.702045e-003, -4.792919e-002, 2.157528e-003, -2.772403e-002, -6.590332e-002, -5.760188e-002, -1.013537e-002, 3.054710e-002, 3.735178e-002, -4.751496e-003, -6.890075e-002, -1.023606e-001, -7.099047e-002, 8.599643e-003, 2.709058e-002, -5.670696e-002, -7.952235e-002, -4.339925e-002, -9.030617e-003, -4.025005e-003, 1.333020e-002, -8.484319e-003, 2.996504e-002, 2.534127e-002, -7.343054e-003, -2.581188e-002, 3.897176e-002, -3.317299e-003, -7.808622e-002, -9.609950e-002, -5.698730e-002, 1.133119e-002, 3.890513e-002, -1.670381e-003, -4.227830e-002, -2.610178e-002, -4.056048e-002, 1.155765e-002, -5.146554e-003, -9.101360e-002, -1.254996e-002, 3.235144e-002, -1.895131e-003, 6.138615e-003, 3.303803e-002, 6.531785e-003, 4.994668e-002, 2.664050e-002, -7.767364e-003, -1.262455e-003, 1.144539e-002, -1.940031e-002, 5.815265e-003, -4.141038e-002, -4.056289e-002, -5.058634e-002, -2.016931e-002, 1.837584e-002, 3.634192e-002, 6.078252e-002, 2.050434e-002, 7.114877e-002, 1.658475e-002, -6.157527e-002, 4.582704e-002, 3.738675e-002, -3.788966e-002, 7.012760e-002, 3.723768e-002, 3.766542e-002, 3.443740e-002, 3.858516e-002, 5.053236e-002, 2.787004e-002, -2.792342e-002, -1.373792e-002, 4.763455e-002, -3.369200e-002, 2.262289e-002, -1.650798e-003, -1.072489e-001, -9.503647e-002, 2.068818e-002, 5.596004e-002, -9.592569e-004, 6.688034e-002, 5.624777e-002, -9.922823e-003, 2.584676e-002, 4.816636e-004, -5.570735e-002, 6.074103e-002, -1.538303e-002,


© ISO/IEC 2004 — All rights reserved

Copyright International Organization for Standardization
Provided by IHS under license with ISO
No reproduction or networking permitted without license from IHS
Not for Resale

3.115753e-002, 8.281134e-003, 4.233838e-002, 7.560093e-002, 5.530883e-002, -1.685071e-002, -1.049898e-002, 1.072386e-003, -1.624671e-002, 1.313158e-002, 2.143225e-002, -1.541657e-002, -4.414579e-002, -2.236554e-002, 2.487988e-002, -1.644102e-002, 3.900440e-003, 4.912409e-002, 3.568361e-002, -3.249158e-002, 2.021982e-002, -5.335040e-002, -3.220322e-003, 2.343486e-002, 1.689212e-002, -3.107152e-002, -1.451052e-002, 3.578407e-002, 1.995304e-002, -3.563493e-002, -1.687570e-002, 1.851708e-002, 6.745102e-002, 9.666991e-002, 8.931061e-002, 3.457542e-002, -2.702421e-002, -1.646216e-002, 1.487977e-002, -1.335845e-002, -3.489530e-002, 2.586470e-002, 4.888292e-002, -3.492240e-002, 1.938524e-002, -2.078635e-002, -2.198755e-002, 1.823310e-002, -2.948521e-002, -5.147466e-002, -6.163251e-002, -2.092932e-002, -2.448078e-002, -4.895353e-002, -3.607938e-002, -2.139596e-003, 3.174882e-002, 4.275965e-002, 1.875263e-002, -3.181740e-002, -5.822427e-002, -6.374755e-003, 1.915092e-002, -1.867152e-002, -5.692299e-002, -1.605578e-003, 4.719231e-002, 2.601179e-003, -3.894119e-002, 3.961237e-003, -4.824627e-002, -4.936136e-002, -4.219788e-002, -3.493429e-002, -8.395135e-002, -6.624304e-002, -3.766701e-002, -1.958294e-002, -2.110379e-002, -8.686780e-003, -7.196617e-003, -1.520164e-002, -5.023052e-002, -7.185249e-002, -4.429052e-002, 1.602754e-002, 1.186519e-002, -1.703542e-002, -6.107921e-002, -2.303351e-002, 3.972661e-002, 2.972922e-002, -3.550227e-002, -2.086616e-002, -4.648195e-002, -7.615735e-002, -3.259349e-002, 2.181802e-002, -5.397417e-002, -7.339088e-002, -3.010654e-002, 1.463730e-002, 2.096917e-002, 1.887904e-002, -4.530122e-003, -3.273241e-002, -5.227145e-002, -4.539048e-002, 4.150180e-003, 1.337603e-002, 8.746783e-003, -5.892753e-003, -4.167667e-002, -3.454284e-002, 1.052914e-002, 4.677414e-002, 8.076412e-003, 2.911631e-003, -4.171104e-002, -7.690959e-002, -1.084072e-002, 6.299257e-002, -4.411653e-003, -4.692074e-002, -1.953954e-002, 2.393699e-002, 2.805784e-002, 1.040724e-003, -3.381218e-002, -5.432676e-002, -4.772512e-002, -1.788406e-003, 1.032860e-002, -9.095634e-003, 3.382972e-003, 1.059867e-002, -5.345936e-003, -4.189305e-002, -4.305416e-002, 2.470508e-002, 4.196551e-002, 5.792831e-002, 6.890143e-003, -6.381629e-002, -5.024273e-003, 6.746367e-002, 2.745853e-002, -8.657672e-003, 7.043456e-003, 5.456696e-002, 5.549965e-002, 3.469474e-002, 6.270927e-003, -3.286129e-003, 3.477500e-002, 8.274714e-002, 5.371060e-002, -6.368038e-003, 1.171077e-002, 1.045761e-002, 2.512798e-002, -1.770885e-002, -5.449405e-002, -1.003618e-002, 3.255942e-002, 7.866944e-002, 8.593264e-002, 1.716781e-002, -3.094491e-002, 1.995435e-002, 3.595443e-002, 1.394475e-002, 2.300941e-002, 6.394977e-002, 8.138456e-002, 7.003012e-002, 4.876633e-002, 4.260273e-002, 7.108220e-002, 1.098359e-001, 6.037500e-002, 2.118937e-002, 2.880279e-002, -1.728540e-002, 3.951755e-002, 4.913233e-002, 1.780528e-002, -3.251084e-003, 1.398308e-002, 4.290393e-002, 9.722586e-002, 8.266267e-002, -4.909448e-002, -3.638380e-002, 2.927968e-003, 2.903520e-002, 1.113198e-002, 3.675407e-002, 5.269688e-002, 3.730811e-002, 1.687003e-002, 1.008933e-002, 5.136611e-002, 8.195471e-002, 8.523436e-003, 1.265794e-003, 2.805744e-002, 4.819982e-003, 2.896607e-002, 2.623592e-002, 5.763091e-003, -7.289637e-002, -6.657910e-002, -3.214654e-003, 2.749747e-002, 3.643908e-002, -2.190083e-002, -3.998035e-002, -3.026956e-002, 3.494284e-002, 8.752128e-004, -1.178836e-003, 5.634002e-003, -2.171466e-002, -4.519973e-002, -2.461920e-002, 2.990108e-002, 3.016107e-002, -4.071989e-002, -5.346116e-002, 3.167874e-002, 5.731811e-002, 1.679043e-002, -1.141695e-002, -1.273375e-002, -1.925958e-002, -1.796487e-002, 1.677286e-002, -2.142474e-002, -4.504660e-002, -9.371479e-003, 1.479230e-002, -1.855748e-002, 4.929843e-002, 3.957166e-003, -3.553562e-002, -3.374597e-002, -6.226970e-002, -6.510988e-002, -1.954708e-002, 2.168140e-002, 2.070269e-002, -9.251401e-003, -3.041298e-002, -1.393816e-002, -1.860470e-003, -3.985379e-003, 1.313013e-002, 1.103398e-002, -3.771078e-002, -1.520551e-002, 2.441843e-002, -2.912570e-002, -8.291242e-002, -5.481308e-002, 2.967757e-002, 1.126475e-002, 5.474444e-002, 2.079869e-002, -4.844490e-002, -5.337553e-002, -6.939798e-002, -5.675726e-002, -1.902151e-002, 1.674889e-002, 4.979737e-002, 5.659899e-002, 5.197740e-002, 4.433615e-002, 2.107964e-002, -1.751756e-002, -3.619982e-003, 6.030440e-003, -3.706006e-002, -2.328621e-002, -1.798791e-003, -1.997517e-002, -6.672395e-002},
{5.499500e-002, 3.011375e-002, 2.683411e-002, 2.211047e-002, 5.310908e-002, 6.202873e-002, 4.290314e-002, 7.291271e-003, -3.341450e-002, -6.723521e-002, -7.893131e-002, -8.482385e-002, -9.929143e-002, -1.051014e-001, -9.825881e-002, -9.312629e-002, -8.601370e-002, -5.649009e-002, -1.461250e-002, 3.299176e-002, 3.685145e-002, 4.171843e-002, 5.478373e-002, 4.961268e-002, 3.449828e-002, 6.140016e-003, 5.330150e-003, 1.245145e-002, 2.792185e-002, 3.749077e-004, -1.712932e-002, -1.262788e-002, -9.223383e-004, 1.278503e-002, 2.712921e-002, 1.727970e-002, -4.562747e-003, -5.319385e-003, 5.218800e-003, 9.268149e-003, -4.393322e-003, 8.767374e-003, 4.000911e-002, 6.684100e-002, 2.098175e-002, -2.267445e-002, -1.997958e-002, 2.382710e-003, 1.593940e-002, -1.523760e-002, 8.575339e-003, 3.353806e-003, -2.692001e-002, -5.673548e-002, -2.372883e-002, 2.665148e-002, 7.441455e-002, 7.647330e-002, 4.073321e-002, -2.739403e-002, -7.151948e-002, -2.978759e-002, 4.675834e-002, 9.502119e-002, 8.651611e-002, 8.106945e-002, 9.178128e-002, 4.972637e-002, -8.449212e-002, -1.331707e-001, -7.787744e-002, 2.543247e-002, -1.274210e-005, -1.926955e-002, 2.421158e-002, 7.656847e-003, -3.264031e-002, -1.799467e-002, 1.731877e-002, 3.917219e-002, 4.262253e-002, 4.072079e-002, 1.644100e-002, -5.918350e-002, -1.440714e-001, -1.416470e-001, -1.554847e-002, 8.610968e-002, 7.905317e-002, 6.945077e-002, 7.390205e-002, 3.931905e-003, -1.078879e-001, -9.102434e-002, 1.066310e-003, 3.852019e-002, -

© ISO/IEC 2004 — All rights reserved


Copyright International Organization for Standardization
Provided by IHS under license with ISO
No reproduction or networking permitted without license from IHS
Not for Resale

1.114173e-002, -1.021665e-002, 1.394797e-002, -6.983708e-003, 2.412999e-002, 3.844835e-002, 1.427087e-002, -2.161904e-002, -5.637200e-002, -6.206858e-002, -8.589978e-003, 2.517367e-002, 1.894185e-002, -1.130944e-002, 3.836666e-002, 7.743243e-002, 2.173443e-002, -6.619553e-003, 3.773348e-002, 2.720631e-002, 9.307294e-003, 3.606282e-002, -3.576572e-002, -1.271116e-001, -1.071818e-002, -1.850678e-002, -3.661419e-002, -2.594616e-002, -3.425341e-003, -2.433149e-002, 3.056699e-003, 1.669860e-002, 2.315537e-003, -6.923995e-003, 2.793100e-003, 2.668433e-002, -1.005827e-002, -7.159228e-002, -4.647394e-002, 1.883950e-002, -4.903245e-002, -6.662238e-002, -1.748362e-003, -1.326510e-002, -3.478315e-003, 2.760814e-002, 2.584624e-002, 5.742098e-003, 1.368923e-002, 5.701260e-003, -4.083755e-002, -4.880049e-002, -1.611175e-002, -4.337876e-003, 5.241654e-002, 4.439858e-002, 2.491677e-002, -2.839516e-002, -3.482773e-002, 3.615489e-002, 5.696843e-002, -4.075526e-002, -8.979638e-002, 8.934443e-003, -5.842897e-003, 1.827684e-002, 8.166507e-002, -2.328166e-002, -3.654994e-002, 6.187072e-002, 7.497084e-002, 3.114942e-002, 1.078609e-002, 4.806241e-002, 4.425389e-002, 2.218050e-003, 2.001681e-002, 3.540285e-002, -2.367947e-002, -7.164192e-002, 4.946766e-002, 1.512276e-002, -5.381017e-002, -9.347323e-002, -2.623024e-004, 1.441185e-002, -5.444920e-003, 7.553654e-002, 1.175174e-002, 2.188670e-002, 8.506265e-002, -1.920708e-002, -9.341989e-003, 2.544416e-002, -7.308081e-002, -4.569168e-002, -4.723982e-002, -4.690743e-002, -8.583872e-003, -2.142194e-002, -5.344630e-002, -4.764804e-002, -4.169806e-002, -3.522963e-002, -2.264289e-003, -1.407430e-002, -3.278251e-004, -1.852182e-002, -1.015054e-002, 5.066588e-002, 5.559826e-002, 8.209473e-002, -5.084291e-002, -5.646740e-002, 1.753876e-002, 2.309773e-002, 9.157443e-002, 7.672706e-002, -2.204081e-002, -5.657744e-002, -2.879577e-002, -4.933506e-002, -2.397186e-002, 5.982079e-003, -5.650771e-002, -4.574749e-002, 1.370193e-002, -1.489998e-002, -5.253132e-002, -4.953909e-002, -5.815997e-003, 2.498898e-002, 5.418010e-002, 7.278439e-002, 5.978406e-002, 7.976351e-002, -6.910829e-003, -2.454907e-003, 6.564176e-002, 5.256167e-002, 1.082547e-001, 1.074108e-001, 4.320370e-002, -3.354593e-002, 1.921154e-002, 2.583255e-002, 3.335215e-003, 6.546684e-002, 7.166495e-003, 2.329513e-002, 5.916271e-002, 2.642984e-002, -1.999204e-002, -2.102943e-002, 1.358111e-002, 4.596209e-002, 4.858891e-002, -1.256483e-002, -6.687787e-003, 3.816762e-002, 2.059583e-002, 2.718775e-002, 7.090498e-002, 5.708599e-002, -4.817407e-003, 5.456147e-002, 3.051657e-002, -3.059577e-002, 2.895277e-002, 6.763315e-002, -7.565994e-003, 4.250690e-002, 3.497264e-002, 3.281789e-002, 6.528316e-002, 3.766826e-002, 2.397927e-003, 4.120815e-003, 3.545064e-002, 4.404407e-002, -1.420703e-002, -8.474308e-002, -5.039733e-002, -1.773993e-002, 1.894259e-002, 1.416671e-002, 3.879352e-002, 3.731959e-002, -8.458118e-002, -8.939451e-002, -1.615666e-002, -3.452949e-002, 2.249900e-003, 5.914381e-002, -2.567778e-002, -1.156038e-002, 1.414977e-002, 5.670453e-003, 3.738717e-002, 1.638473e-002, -7.920610e-004, 9.042520e-003, 1.091402e-002, -1.125338e-002, -6.709132e-002, -8.453776e-002, -6.887072e-002, -4.373856e-002, 8.864287e-003, 2.197444e-003, 1.939838e-003, -4.346300e-004, -4.477393e-002, -1.336665e-001, -1.264316e-001, -7.729870e-002, -3.935120e-002, 6.467442e-003, -4.318019e-002, -3.023686e-002, -3.524611e-002, -2.028199e-002, 1.591235e-002, -9.038585e-003, -3.058374e-002, -3.547422e-002, -3.004970e-002, -1.555354e-002, -1.294901e-002, 1.189979e-002, -5.899114e-002, -9.795797e-003, 5.078748e-002, 2.412428e-002, -2.826846e-003, -2.644127e-002, -4.533941e-003, -3.313737e-002, -9.552228e-002, -1.182522e-001, -9.696639e-003, -3.206534e-002, -4.966200e-002, -2.946944e-002, -4.184200e-002, -3.770463e-002, 8.949894e-003, 6.628841e-003, 3.929250e-003, 1.144324e-002, 2.030686e-002, 3.825144e-002, 8.879092e-002, 6.681495e-002, -5.161997e-002, 3.773581e-002, 8.471736e-002, 5.215059e-002, 1.381450e-002, -4.590751e-002, -4.315795e-002, 2.438719e-002, 3.413004e-002, -1.872829e-002, 3.882461e-002, -3.815193e-002, -2.376145e-002, -1.206743e-002, -1.861192e-002, -4.505869e-002, -2.566857e-002, -2.389818e-002, -2.725893e-002, -2.416165e-002, -1.930867e-002, 1.125941e-002, 7.283843e-002, -1.472206e-003, -6.771616e-002, 1.748449e-002, 8.079578e-003, -1.481684e-002, -3.048720e-002, -8.192315e-002, -8.645192e-002, -3.433737e-002, 5.159272e-002, 4.136336e-002, 4.585771e-002, -1.983004e-002, 8.562146e-003, 2.102867e-002, 1.849585e-002, -1.860408e-002, -2.122580e-002, -3.134844e-002, -5.273502e-002, -5.453524e-002, -5.098688e-002, -2.049484e-002, 8.376721e-003, -4.872613e-002, -9.778553e-003, 2.827357e-002, -3.971732e-002, -4.024989e-002, -2.197504e-002, -2.230740e-002, -8.082949e-003, 1.171562e-002, 4.085549e-002, 3.033116e-002, 2.346604e-002, -3.676574e-003, 3.612266e-002, 3.824480e-002, 4.734647e-002, 1.722937e-002, -1.601316e-004, -1.751138e-003, -2.488992e-002, -3.620800e-002, -2.211794e-002, 7.883361e-003, 3.775918e-002, 3.607868e-002, 4.676038e-002, 1.300665e-002, 1.032545e-002, 3.159830e-003, -3.770053e-002, -6.031919e-002, 1.836108e-002, 6.997962e-002, 6.735851e-002, 2.592817e-002, -5.788627e-002, -2.453549e-002, 4.759085e-002, 1.621859e-002, 3.691099e-002, 2.776949e-002, 1.017677e-002, 1.911151e-002, 1.277530e-002, -1.959559e-003, 6.553111e-003, 3.816260e-002, 6.982538e-002, 8.453865e-002, 3.217269e-002, 4.064427e-004, -2.220236e-002, -4.869643e-002, -5.029282e-002, 1.679593e-002, 6.082134e-002, 7.854861e-002, 5.934531e-002, 2.644086e-002, -4.644354e-002, -2.391092e-002, 2.357168e-002, -1.682964e-002, 2.355475e-003, 2.248050e-002, 2.835612e-004, 1.507325e-002, 2.850266e-002, 1.844777e-002, 1.803429e-002, 2.112962e-002, 3.388855e-002, 5.152432e-002, 5.024293e-002, 1.199195e-002, -2.908908e-002, -6.794306e-002, -2.605264e-002, 9.183145e-002, 8.238044e-002, 3.083945e-002, 1.990105e-002, 1.441930e-002,


© ISO/IEC 2004 — All rights reserved

Copyright International Organization for Standardization
Provided by IHS under license with ISO
No reproduction or networking permitted without license from IHS
Not for Resale

6.472364e-002, 3.454415e-002, 1.877917e-002, -4.438803e-002, -4.315552e-002, 8.190526e-003, -4.982322e-003, 1.088417e-003, 2.427675e-002, 1.556069e-002, -5.826005e-003, -2.951310e-002, -4.193146e-002, -4.081404e-002, -4.460783e-002, -3.524057e-002, -6.926224e-003, -3.503887e-002, -4.202430e-002, -7.757611e-003, -2.837475e-002, -6.166824e-002, -4.711251e-002, -2.131518e-002}, {-6.274543e-002, 8.536581e-003, -1.085879e-002, -7.301114e-004, 4.700528e-002, 4.308967e-002, 2.588527e-002, -4.403488e-003, -2.180881e-002, -3.223889e-002, -5.158986e-002, -5.901157e-002, -4.143927e-002, -2.795375e-002, -1.385153e-002, 8.249328e-003, 2.726047e-002, 4.526900e-002, 5.310249e-002, 6.338027e-002, 6.498717e-002, 3.656670e-002, 3.409380e-003, -2.366032e-002, -2.895719e-002, 3.042380e-002, -2.283485e-002, -5.895282e-003, 2.235007e-002, 3.211816e-002, 3.984332e-002, 2.566252e-002, 1.515657e-002, 1.842225e-003, -1.825130e-002, -2.374355e-002, -1.913932e-002, -2.466716e-002, -3.213634e-002, -1.910367e-002, -7.160268e-003, 1.179873e-002, 1.684918e-002, 2.915403e-002, 3.967320e-002, 1.809595e-002, -2.451824e-002, -4.048090e-002, 6.827269e-003, 3.971050e-002, -2.890925e-002, -3.484748e-003, 1.762581e-002, 5.572022e-002, 8.860323e-002, 5.382960e-002, 8.131424e-003, -3.109115e-002, -4.008450e-002, -9.552193e-003, 1.951487e-002, 1.693878e-003, -3.156390e-002, -4.349184e-002, -4.418971e-002, -3.037228e-002, -3.302243e-002, -5.912395e-003, 2.383457e-002, 1.905514e-002, -8.865522e-003, -2.923904e-002, 1.739836e-002, 2.094644e-002, -2.430034e-002, 2.513910e-004, 1.526639e-002, 5.462214e-002, 8.903966e-002, 3.701887e-002, -3.790684e-002, -9.480636e-002, -9.228049e-002, -3.074252e-002, 4.774818e-002, 7.414485e-002, 1.793801e-002, -3.099712e-002, -3.661255e-002, -3.767918e-002, -3.574365e-002, 6.614223e-003, 7.340093e-002, 8.197987e-002, -5.412838e-003, -1.163972e-001, 2.240096e-003, 1.217056e-002, 2.993747e-003, -6.719723e-003, -5.068871e-002, -2.032824e-002, 1.144561e-002, -3.018035e-002, -3.142112e-002, -2.034028e-002, -8.481174e-003, 3.439529e-003, 4.648745e-002, 7.338371e-002, 3.739813e-002, -3.410039e-002, -5.668134e-002, -5.084469e-002, -4.038712e-002, 1.737663e-002, 9.414634e-002, 7.883353e-002, -1.746063e-002, -8.018126e-002, -8.084723e-003, 3.417544e-002, 2.728388e-002, -1.874006e-002, -2.394430e-002, -1.859723e-002, -3.272740e-002, -3.731377e-002, -1.206881e-002, 9.952129e-003, 2.783040e-002, 2.064371e-002, -3.880053e-003, -2.449674e-002, -5.188930e-002, -7.455529e-002, -6.348824e-002, -3.180822e-002, -3.078380e-002, -2.999977e-002, 2.635863e-002, 4.585027e-002, 6.839089e-002, 8.287356e-002, -1.023354e-002, 1.383826e-002, 1.058092e-002, 3.211364e-002, 7.808565e-002, -2.224737e-003, 3.069941e-003, 2.946584e-002, -2.177193e-002, -6.853507e-002, -3.665237e-002, 2.384715e-002, 1.493901e-002, -2.407983e-002, -8.184034e-002, -4.924833e-002, 7.445092e-004, 3.132735e-002, -1.653253e-002, -5.679772e-002, -3.461068e-002, -7.153957e-003, 3.949508e-002, 6.065247e-002, -3.711070e-002, -5.264817e-002, -7.487629e-002, -1.929347e-002, 3.826098e-002, -1.087809e-002, -1.475975e-002, -1.013712e-002, -3.543550e-002, -2.811960e-002, -2.153296e-002, 2.340857e-002, 8.585782e-002, 1.309784e-001, 6.810215e-002, 7.367310e-002, 4.513009e-002, 1.199625e-002, -7.256964e-003, -1.533221e-002, 1.202580e-002, -1.734171e-002, -2.800265e-002, 1.011918e-002, 2.113949e-002, 6.010949e-003, -1.881413e-002, -8.315607e-003, 2.107324e-002, 4.213584e-002, 4.506429e-002, -3.235892e-002, -2.452056e-002, 2.903276e-003, -3.024253e-002, -4.343510e-002, 4.580118e-002, 1.470190e-001, 1.036605e-001, 9.776556e-002, 5.359489e-002, 8.522596e-003, 4.542173e-002, 7.270555e-002, 4.743904e-002, 3.099615e-002, -4.960385e-003, -2.435129e-002, 3.380356e-002, 2.466380e-002, 9.457731e-003, -8.320488e-004, -1.727258e-002, 8.799639e-004, -2.350934e-002, -8.446933e-002, -2.178966e-002, 4.161936e-002, 1.405768e-002, -3.878276e-002, -5.755650e-002, -6.472136e-002, -6.114387e-002, 4.181077e-003, 1.338357e-003, -2.345666e-002, 3.976402e-003, 1.710331e-002, -5.144624e-002, -7.123313e-002, -7.907498e-002, -8.738011e-002, -8.214822e-003, -1.414091e-002, -2.281065e-003, -2.294701e-002, -5.529889e-002, -4.119289e-002, -5.598267e-002, -9.582458e-002, -5.335789e-002, -7.185363e-004, 5.380833e-003, -2.777406e-002, -7.167132e-002, -1.073770e-001, -1.130642e-001, -3.480341e-002, -2.126917e-002, -4.718490e-002, -3.020087e-002, -3.455094e-002, -7.359756e-002, -2.686301e-002, -2.072845e-002, -3.721148e-002, -4.011564e-002, -2.175994e-002, -7.225036e-003, -2.885270e-002, -6.204075e-002, -3.069150e-002, -2.276182e-002, -4.670309e-002, -9.491135e-003, 2.840948e-002, 2.980592e-002, 1.649326e-002, 1.157745e-002, -4.147948e-002, -1.030135e-001, -9.690737e-003, -2.110938e-002, -5.921406e-002, -3.002631e-002, -3.429914e-002, -7.156910e-002, 2.343938e-002, 9.064198e-002, 7.881298e-002, -4.431367e-002, -9.836152e-003, 4.949183e-003, -9.650673e-003, -1.972097e-002, -7.869340e-003, 4.909183e-003, -1.401556e-002, 3.028233e-002, 6.122788e-002, 6.526537e-002, 8.712121e-002, 7.872430e-002, -4.356327e-002, -6.031877e-002, 6.092844e-002, -6.900333e-003, -5.427765e-002, 4.085443e-003, 2.235073e-002, -4.142065e-002, -4.666953e-002, 6.949720e-002, 1.161693e-001, 4.086979e-003, 1.336125e-002, 7.518681e-003, 1.986352e-002, 6.481683e-003, 2.009339e-002, 2.136682e-002, -1.690670e-002, 1.253146e-002, 3.961784e-002, 6.025694e-002, 8.252926e-002, 2.787518e-002, -6.916716e-002, 8.154144e-003, 9.856483e-002, 1.219917e-002, -2.744037e-002, 3.060684e-002, 7.804655e-002, 7.182189e-003, -4.833100e-002, -6.003355e-002, 1.361464e-002, 2.567049e-002, 2.515921e-002, 6.140637e-003, 2.564316e-002, 5.010389e-002, 5.701560e-002, 3.207208e-002, -1.314507e-002, -1.558645e-002, 9.875538e-004, 2.077283e-002, 4.040251e-002, -7.776206e-003, -4.732329e-002, 4.340818e-002, 6.240430e-002, 2.600077e-003, -1.196858e-002, 3.271596e-002, 4.377576e-002, -3.211781e-002, 1.159214e-002, -2.510983e-002, -5.882810e-002,

© ISO/IEC 2004 — All rights reserved


Copyright International Organization for Standardization
Provided by IHS under license with ISO
No reproduction or networking permitted without license from IHS
Not for Resale

8.100385e-003, 3.229917e-002, 1.280113e-002, 1.651304e-002, 3.756516e-002, 7.054244e-002, 7.993489e-002, 4.006821e-002, 2.672776e-002, 3.882730e-002, 5.098997e-002, 5.490909e-002, 1.301456e-002, -2.692736e-002, -2.920102e-002, -1.911814e-002, -1.280755e-002, 2.208487e-002, 4.163225e-002, -4.953734e-002, -1.062568e-001, -1.815549e-002, 4.149875e-002, -6.461000e-003, -1.940008e-002, 1.531427e-002, 1.039811e-002, -6.763870e-003, -7.240110e-003, 7.540097e-003, 3.481616e-002, 2.441765e-002, 1.007404e-002, 2.020533e-002, 3.750683e-002, 5.047663e-002, 6.424457e-002, 2.988266e-002, -3.244994e-003, 1.299665e-002, 1.968720e-002, 4.945762e-002, 4.774764e-002, -2.767089e-002, 1.993610e-003, 3.220217e-002, 5.635360e-002, 2.224487e-002, -1.364510e-002, -4.501698e-003, 4.509224e-003, -8.024377e-003, -2.984790e-002, -4.759621e-002, -3.349654e-002, -3.629410e-002, -4.028153e-002, -1.202369e-002, 9.894406e-003, 1.496129e-002, 5.619082e-002, 4.351395e-002, 4.501856e-002, 3.299909e-002, -2.288424e-002, -1.902754e-002, -9.980215e-003, -4.298821e-002, 7.391646e-002, 1.307205e-001, 5.175211e-002, 2.227385e-003, 5.595360e-002, 4.509407e-003, 3.010848e-003, -2.773773e-003, -1.895395e-002, -4.852707e-002, -4.929577e-002, -3.707493e-002, -2.745312e-002, -1.411485e-002, -2.880151e-002, -3.721825e-002, 1.011327e-002, 5.255945e-002, 7.875055e-002, 4.627185e-002, -2.217316e-002, -6.296717e-003, 4.017337e-002, -9.621045e-003, 3.798079e-002, 8.622657e-002, -1.382926e-002, -5.999214e-002, 4.562362e-002, 3.942625e-003, -8.181397e-003, 1.299081e-002, 1.629430e-002, -1.972528e-002, -2.670682e-002, -2.600812e-004, -4.309001e-003, -4.807021e-002, -1.024385e-001, -8.893225e-002, -5.737710e-003, 5.550933e-002, 7.847369e-002, 6.570735e-002, 2.815086e-002, -4.892600e-003, 1.121895e-002, 6.004601e-002, 1.059529e-001, 6.957587e-002, -5.992861e-002, -1.326667e-001, -2.685196e-002, -3.725503e-002, -2.674628e-002, 1.734013e-002, 4.296260e-002, 2.262751e-002, 1.226738e-003, 2.715383e-002, 1.915757e-003, -7.836492e-002, -1.410785e-001, -1.106812e-001, -3.779732e-002, 1.066104e-002, 1.209248e-002, -4.142158e-003, -2.750600e-003, -3.549272e-002, -2.523925e-002, 3.117665e-002, 6.834803e-002, 5.162896e-002, -4.234216e-002, -1.580188e-001},
{3.552346e-002, -3.533734e-002, -9.134380e-003, 3.719388e-003, -1.468551e-002, -4.528336e-002, -2.773081e-002, 4.007219e-002, 9.435717e-002, 1.122128e-001, 8.777067e-002, 2.400768e-002, -3.978363e-002, -7.442129e-002, -6.830383e-002, -5.339179e-002, -4.503416e-002, -2.497657e-002, -1.218463e-002, -1.586302e-002, -5.928356e-003, 3.971588e-002, 1.072878e-001, 1.460753e-001, 4.967509e-003, -3.820313e-002, 6.606781e-003, -3.348995e-003, -2.954033e-002, -6.167467e-002, -5.250077e-002, -2.069893e-002, -4.774470e-003, -8.987607e-003, -1.619504e-002, -2.458050e-002, -4.203029e-002, -4.972095e-002, -4.930476e-002, -4.901411e-002, -5.155821e-002, -3.519668e-002, -1.550894e-002, -3.805344e-002, -4.054886e-002, -4.506755e-003, 6.675563e-002, 1.216599e-001, -2.682380e-002, -1.223828e-002, 3.563666e-002, -1.026425e-003, -1.057343e-002, 2.028300e-002, 5.389919e-002, 5.536530e-002, 2.183517e-003, -3.092547e-002, -3.162910e-002, 3.950192e-003, 3.796293e-002, 6.115972e-002, 3.499243e-002, -1.590378e-002, -5.324454e-002, -4.288627e-002, -1.764667e-002, -4.540427e-002, -6.046898e-002, -2.206316e-002, 5.253631e-002, 8.627177e-002, -2.346873e-002, 1.187273e-002, 3.773002e-002, -1.923884e-002, 2.118177e-002, 7.597115e-002, 6.053881e-002, 2.232742e-002, -2.759306e-002, -5.880197e-002, -6.262001e-002, -3.595052e-002, 1.768271e-002, 8.563340e-002, 8.456484e-002, -9.671840e-003, -9.339284e-002, -7.551503e-002, -5.243438e-003, 2.968285e-003, -1.599797e-002, -2.702245e-002, -4.377701e-002, -5.836911e-002, 4.337912e-003, 3.294632e-002, 1.474687e-002, -6.381045e-002, -1.483212e-002, 1.347336e-002, -1.700462e-002, -1.895353e-002, 1.780761e-003, 3.202302e-002, 2.586271e-002, -2.541744e-004, -3.969942e-003, 6.334692e-002, 1.107459e-001, 8.794470e-003, -1.181440e-001, -1.044923e-001, 2.149266e-002, 8.000917e-002, 5.584653e-002, 1.981538e-002, -1.030335e-003, 4.542181e-003, 3.859882e-002, 1.245165e-002, -2.164678e-002, -8.087867e-002, 4.794808e-003, 3.608798e-002, 9.660531e-003, 1.427424e-002, 6.623783e-002, 9.222114e-002, 7.243817e-002, 6.409280e-003, -8.665623e-002, -7.770635e-002, 6.419552e-002, 4.603334e-002, -8.321816e-002, -1.047290e-001, 1.505272e-002, 7.258383e-002, 4.279362e-002, 2.018699e-002, 2.864863e-002, 4.206568e-002, 1.632676e-002, -5.765947e-002, -2.795143e-002, 1.033147e-003, 2.385262e-002, -5.530433e-003, -5.639667e-002, -6.341395e-002, -6.676670e-002, -3.768209e-002, 6.741259e-002, 1.182490e-001, -8.892579e-003, -1.222330e-001, -5.968746e-002, 4.757566e-002, 3.742137e-003, -3.878904e-002, -8.588917e-003, -3.267380e-002, -7.609285e-003, -2.970911e-002, -1.966518e-002, -4.009714e-002, -2.911070e-002, -6.345138e-002, 1.177466e-002, 8.459181e-002, 2.708016e-002, -2.185996e-002, -1.596624e-002, 6.825216e-002, -2.503352e-002, -1.603568e-001, -3.200873e-002, 5.686898e-002, 4.759115e-002, 3.895161e-002, -2.763550e-002, 7.442657e-002, 8.537155e-002, 6.264335e-002, 4.067692e-002, -2.277895e-002, 4.196543e-002, 3.811701e-002, 7.405180e-002, 4.114326e-003, -3.346371e-002, -9.622291e-003, 1.361474e-002, 2.190642e-002, -2.112815e-002, -1.780593e-002, -7.560519e-003, -3.576943e-002, 1.313413e-003, 2.037672e-002, 5.184842e-002, -1.333920e-001, -5.845778e-002, 8.690792e-002, 1.774155e-002, 7.818471e-002, 6.576483e-002, 4.938225e-002, 5.452237e-002, 4.583171e-002, 4.048855e-002, -4.911993e-002, -4.350644e-002, -9.001108e-003, -3.397505e-002, 1.578247e-002, -1.859403e-002, -2.727425e-002, -2.460495e-002, 6.858151e-003, 1.746518e-002, 1.840511e-002, 3.778422e-002, 1.020023e-001, 7.507712e-002, 1.300636e-002, 5.564257e-002, 7.894043e-002, 9.230081e-003, 4.820856e-002, -1.319264e-002, -2.401134e-002, 1.031415e-002, 5.302895e-002, -9.789727e-003, -4.470070e-002, -8.481033e-003, 4.652975e-002, -


© ISO/IEC 2004 — All rights reserved

Copyright International Organization for Standardization
Provided by IHS under license with ISO
No reproduction or networking permitted without license from IHS
Not for Resale

8.554624e-003, 2.195805e-002, -1.791186e-002, -2.391689e-002, 2.290998e-002, 6.577418e-002, 5.091975e-002, 1.368899e-003, -3.908581e-002, -5.739197e-002, -7.384476e-002, -5.152500e-002, 5.824078e-003, -2.583034e-002, -4.034676e-002, 1.685779e-002, -1.906217e-002, -1.995417e-002, -1.056575e-002, 1.788925e-002, -5.001606e-002, -8.256574e-002, -5.357877e-002, -8.936962e-003, 2.398565e-002, 1.559935e-002, 4.787027e-003, 2.367850e-002, 4.328134e-002, 9.209824e-002, 6.832220e-002, 1.002880e-002, -5.320766e-002, -9.134647e-002, -8.520188e-002, -4.509666e-002, -5.120228e-002, -9.812709e-002, -4.691661e-002, 6.257351e-003, 1.537233e-002, 1.777095e-002, -4.381353e-003, -2.164299e-002, -3.601203e-002, -8.048515e-002, -6.253544e-002, -3.672291e-002, 3.582992e-002, 4.014561e-003, 1.063986e-002, 5.874598e-002, 4.361056e-002, 6.082087e-002, 5.127369e-002, 3.028388e-002, -5.199684e-003, -2.558140e-002, -1.602476e-002, -7.272180e-003, -5.640174e-002, -8.783567e-002, -2.627339e-002, 2.142643e-002, 4.834556e-002, 3.994786e-002, 7.032410e-003, -4.100266e-002, -5.651477e-002, -2.704155e-002, -3.748563e-003, -1.912979e-003, 1.322938e-002, -6.541274e-003, 7.220682e-003, 5.155163e-002, 2.820674e-002, 2.005460e-002, 4.823257e-003, 2.819283e-002, 4.379909e-002, 6.204115e-002, 7.911590e-002, 5.604331e-002, -4.356564e-002, -5.609372e-002, -3.014551e-002, 1.908869e-002, 3.618032e-002, 1.708273e-002, -4.494995e-003, -3.863109e-002, -8.040130e-002, -6.520415e-002, 5.736950e-002, 8.571712e-002, 1.496212e-002, 4.356362e-003, 8.996966e-004, 2.472257e-002, -2.576584e-002, -5.292451e-002, -6.262873e-002, -7.829356e-003, 5.335633e-002, 9.055295e-002, 8.547163e-002, 1.837383e-002, -2.889449e-002, -1.762210e-002, -2.638248e-002, -1.913554e-002, -8.919968e-003, -8.845967e-003, -2.511863e-002, -3.108142e-002, -2.603376e-002, -8.437125e-002, -2.897260e-002, 5.950763e-002, 2.162204e-002, 9.456790e-003, -6.274209e-004, 1.095602e-002, -3.797386e-002, -9.091189e-002, -1.247169e-001, -9.533830e-002, -4.712585e-002, -1.933532e-002, 1.120349e-003, 7.362132e-003, 3.147009e-002, 3.355546e-002, 3.533617e-003, -3.180847e-002, -9.239082e-003, 2.078821e-002, 2.541829e-002, 2.946871e-002, 4.262939e-002, 1.425380e-002, 1.128764e-003, 2.745669e-003, 1.863117e-002, 1.224422e-002, -5.440539e-003, -3.353243e-003, -2.625747e-002, -5.166990e-002, -8.367387e-002, -8.180671e-002, -4.675939e-002, -1.286835e-002, 5.191992e-003, 2.181000e-002, 3.681637e-002, 1.943859e-002, 2.007036e-002, -9.606736e-003, -1.038042e-002, -3.280788e-003, 3.089681e-002, 2.959285e-002, 3.365443e-002, 1.004958e-002, 6.846066e-002, 5.109316e-002, 4.633282e-003, -1.543051e-003, -1.035282e-002, -1.454868e-002, -2.501803e-002, -9.697961e-003, -2.485799e-002, -3.684332e-002, -2.658909e-002, -1.366643e-002, -1.523182e-003, 2.276925e-002, 1.243699e-002, -9.733587e-004, 4.060543e-002, -1.406519e-002, -5.069411e-002, -2.612545e-002, 1.184496e-002, 1.640584e-002, -3.145181e-002, -3.696951e-002, 3.349277e-002, 6.298085e-002, 3.017494e-003, -1.340220e-002, 1.488147e-004, -2.013717e-002, -2.520281e-002, 7.588749e-003, 1.417897e-002, -7.781326e-003, -1.997432e-002, -1.705582e-002, 1.447698e-002, 3.885910e-002, 1.895551e-002, -1.457438e-002, -1.287132e-002, -3.344641e-002, -2.206159e-002, 1.394427e-002, 3.776475e-002, 2.405051e-002, -2.999091e-002, -2.206770e-002, 2.408861e-002, 4.157988e-002, 2.120482e-002, -2.852528e-002, 7.323490e-003, -8.913053e-003, -2.244009e-002, 1.331041e-002, 3.667778e-002, 1.108261e-002, -1.633491e-002, 7.967396e-003, 5.782306e-002, 4.870109e-002, 8.475794e-003, -8.395155e-003, 3.355364e-002, 2.849949e-002, -7.427417e-004, -3.794377e-002, -2.238571e-002, -1.195245e-002, -1.029701e-002, 2.106814e-003, 2.734906e-002, 3.694478e-002, 2.752023e-002, -2.748822e-002, 1.002489e-002, 8.620561e-003, -8.842386e-003, 2.978657e-002, 5.955650e-002, 3.968195e-002, 1.026035e-002, 5.623260e-002, 8.508699e-002, 3.669587e-002, -1.412777e-002, -2.222583e-002, 1.869916e-002, 1.723049e-002, 2.589658e-003, -4.336997e-002, -4.291884e-002, -3.944745e-002, -3.375422e-002, -2.698333e-002, -2.738296e-003, 2.368131e-002},
{-3.522905e-002, 4.383111e-002, 4.878963e-003, -1.433877e-002, 5.130907e-002, 5.522150e-002, 3.937396e-002, 2.881522e-002, 1.835370e-002, 1.743675e-003, -2.001227e-002, -6.426666e-002, -9.410042e-002, -9.691173e-002, -5.299538e-002, 8.633563e-003, 4.987496e-002, 5.610137e-002, 3.445764e-002, -2.044520e-003, -3.304134e-002, -1.864922e-002, -1.819379e-003, 7.646535e-003, -2.464817e-002, 4.694727e-002, -3.412645e-004, -6.564497e-003, 2.222033e-002, -2.073605e-002, -4.583939e-002, -3.138904e-002, -8.274649e-003, 2.150113e-004, 1.897249e-002, 7.236058e-003, -3.184034e-002, -5.812275e-002, -2.927911e-002, 3.898992e-002, 8.966067e-002, 9.715922e-002, 7.578867e-002, 3.671898e-002, -1.182360e-002, -1.767989e-002, -6.283046e-003, -6.937838e-003, -1.376127e-002, 2.937416e-002, -7.658956e-003, -2.676445e-002, -2.824345e-002, -5.433414e-002, -6.122308e-002, -4.842591e-002, -7.681399e-003, 2.874050e-002, 7.130308e-002, 9.132939e-002, 6.168240e-002, 7.427680e-003, -1.817564e-002, 2.589448e-002, 8.232944e-002, 8.974528e-002, 4.371596e-002, 1.485246e-002, -2.061030e-002, -2.111714e-002, -1.341600e-002, -3.297587e-003, -4.550366e-003, -2.283782e-003, -2.714172e-002, -3.878739e-002, 1.593752e-002, 3.036136e-002, 1.527532e-002, 1.357903e-002, 8.166816e-003, 9.248175e-003, 1.246123e-002, 1.661866e-002, 1.917999e-002, -3.064612e-002, -9.873404e-002, -7.673148e-002, -8.902094e-003, -1.271363e-002, -8.633546e-002, -1.102230e-001, -5.391496e-002, 1.885040e-002, 6.347750e-002, 5.370185e-002, 3.250438e-003, -4.290316e-002, -3.249529e-002, 3.241240e-002, 6.525035e-002, -3.272011e-002, -3.685689e-002, -1.348253e-002, -8.311614e-003, -2.578972e-002, -1.128694e-002, 4.381821e-002, 8.705468e-002, 4.191717e-002, -5.911214e-002, -6.137098e-002, 1.222949e-002, -8.478129e-005, -9.085262e-002, -1.148254e-001, -7.654508e-003, 4.828895e-002, -2.076276e-004, -6.029338e-002,

© ISO/IEC 2004 — All rights reserved


Copyright International Organization for Standardization
Provided by IHS under license with ISO
No reproduction or networking permitted without license from IHS
Not for Resale

2.459657e-002, -4.589339e-002, 7.566041e-003, 3.934455e-002, -2.968722e-002, -9.475901e-002, -2.261236e-002, 3.159845e-002, 9.266997e-003, -2.464841e-002, -3.243820e-002, -9.052154e-003, 3.164955e-002, 5.602379e-002, 4.767419e-003, 1.913104e-002, 8.922101e-002, 6.975660e-002, -1.027210e-002, -8.602941e-003, 3.397062e-002, -3.662306e-003, -3.837491e-002, -4.596993e-002, 4.467223e-002, 5.372435e-003, 9.908698e-003, -5.327480e-002, -5.865060e-002, -5.204117e-002, 2.530944e-002, 4.693152e-002, -2.582901e-002, -5.042452e-002, -2.316910e-002, -2.383504e-002, -5.317119e-002, -1.106151e-002, 3.397937e-002, 5.911245e-002, 3.742583e-002, -1.020505e-002, 9.237917e-003, 1.037096e-001, 5.743499e-002, 3.940115e-003, 3.469653e-002, 8.011306e-002, 3.584104e-003, 2.332054e-002, -5.096621e-003, -9.340787e-002, -2.637325e-002, -3.957367e-002, -1.823217e-002, 3.723297e-002, -2.422371e-002, -6.529579e-002, 4.204226e-002, 8.083351e-002, -4.241451e-002, -7.921695e-002, 1.619628e-002, 1.208577e-001, 7.041788e-002, -7.746672e-003, 6.966644e-002, 1.629875e-001, 3.040602e-002, -4.904844e-002, 1.689863e-002, 8.051287e-002, -5.955755e-002, -5.533480e-003, -1.518718e-003, -2.173398e-002, 3.557353e-002, 3.063941e-002, 2.686604e-002, 2.115230e-002, -2.082203e-002, -9.659825e-002, 1.868270e-002, 9.149103e-002, 2.343927e-002, -6.543887e-002, -4.910310e-002, 2.926429e-002, -7.842115e-003, -2.932415e-002, 2.242330e-002, 1.515043e-002, -5.570292e-002, -2.575057e-002, 2.419493e-002, 8.903451e-002, -5.181094e-002, -1.887747e-002, 9.894384e-004, 1.747586e-002, 2.127299e-002, 2.860843e-002, 7.353295e-002, 7.285978e-002, -2.220102e-002, -8.859255e-002, -6.877040e-002, -1.979742e-002, 7.695471e-003, -6.598585e-002, -1.235961e-001, -8.659304e-002, -8.789079e-002, -6.185958e-002, -3.234913e-002, -8.683447e-002, -9.264113e-002, 1.145087e-002, 2.630757e-002, -2.097523e-002, 1.243749e-002, -1.444778e-002, -1.819896e-002, 4.627500e-002, 5.221911e-003, -2.171304e-002, 2.630021e-002, 6.300086e-002, 5.969548e-002, 4.545285e-002, 5.345568e-002, 5.382139e-002, 1.632253e-002, -7.711660e-002, -1.462699e-001, -8.197426e-002, -4.855940e-002, -8.318417e-003, -6.464265e-003, -8.587571e-002, -1.441766e-001, 9.881956e-003, 5.248445e-002, 2.661443e-002, 3.398687e-002, 1.214528e-005, -1.245813e-002, 7.796830e-002, 6.392380e-002, -2.424321e-002, -3.373892e-002, -1.930405e-002, -1.708129e-003, 1.270805e-002, 3.338645e-002, 4.168780e-002, 1.162588e-002, -5.623175e-002, -4.689351e-002, -1.247937e-002, 3.726544e-003, 2.944254e-002, 3.932875e-002, -2.255266e-002, -1.299394e-001, -3.879980e-002, 4.540215e-002, 1.800064e-002, 3.193632e-002, -1.915565e-003, 2.492041e-002, 7.219427e-002, 1.005354e-001, 4.859842e-002, -7.818912e-004, -1.948082e-002, 3.629425e-003, 3.115189e-002, 5.338308e-002, 4.874464e-002, 1.539740e-002, 3.421553e-002, 4.630101e-002, 3.382618e-002, 7.566663e-003, 1.804466e-002, 3.863292e-002, 1.866967e-002, -3.327174e-002, -4.468410e-002, 6.193663e-003, 1.671178e-002, 7.684814e-003, 6.882508e-003, 3.344107e-002, 5.066245e-002, 8.268334e-002, 8.515878e-002, 4.385982e-002, 1.916967e-002, 3.547480e-002, 4.094372e-002, 3.627179e-002, 2.884406e-002, 6.142489e-002, 1.081248e-001, 5.513728e-002, 8.676111e-003, -1.370153e-002, -9.955424e-003, -8.971218e-003, -1.815469e-002, 2.854342e-002, 3.117332e-002, -9.355067e-004, -1.914899e-002, -4.661736e-003, 2.529853e-002, 3.878690e-002, 9.538419e-003, 4.086837e-002, 6.832710e-002, 3.977674e-002, -4.972649e-003, -2.319393e-002, -3.633177e-002, -3.039489e-002, 7.917506e-003, 5.703181e-002, 3.865550e-002, -2.907329e-002, -3.411683e-002, -4.629963e-003, 1.253653e-002, -1.109496e-003, -5.543578e-002, -2.466771e-002, 9.335153e-002, 2.989975e-002, -3.728470e-002, 1.436572e-003, 2.045429e-002, 2.182905e-002, -3.004283e-002, -2.526194e-002, 1.827639e-002, 1.100488e-002, -1.921247e-002, -3.011127e-002, -2.858214e-002, -1.627913e-002, 2.359279e-003, -2.715702e-003, -5.056641e-002, -5.634956e-002, 1.945865e-003, 4.358585e-002, 6.895287e-002, 9.538211e-002, 1.926212e-002, -5.494593e-002, 3.730946e-002, 5.109371e-002, -2.207710e-002, 1.524745e-002, 1.890856e-002, 1.127986e-002, -6.054437e-002, -7.616758e-002, -3.221687e-002, -3.095389e-002, -6.674705e-002, -7.376792e-002, -5.844204e-002, -4.242517e-002, -2.200478e-002, -5.372246e-003, -2.620409e-002, -2.494912e-002, -4.590210e-002, -5.370196e-002, -3.586817e-002, 4.101922e-002, 4.526326e-002, -1.916573e-002, -1.206186e-002, 4.601862e-003, -3.346335e-002, 2.367688e-002, 3.537772e-003, -2.208903e-003, -5.802319e-002, -9.102087e-002, -5.485823e-002, -4.416058e-002, -7.585181e-002, -8.653654e-002, -6.358529e-002, -1.880866e-002, 3.264521e-002, 4.396596e-002, 2.736425e-002, 2.143056e-002, -6.501267e-003, -2.475490e-002, -2.378463e-002, 6.713998e-004, -2.295959e-002, -1.007864e-002, 1.081116e-002, -5.024429e-003, -4.214730e-002, 2.445316e-003, -3.882118e-002, -1.877291e-002, -1.685435e-002, -6.658091e-002, -3.820987e-002, -1.014258e-002, -3.308684e-002, -4.571758e-002, -2.560526e-002, 2.518531e-002, 6.590548e-002, -5.580399e-004, -2.441638e-002, 1.957314e-002, 3.720495e-002, 4.700028e-003, -5.382499e-003, -9.082521e-003, -1.316007e-002, -1.758080e-002, 7.287378e-003, 8.485637e-003, -2.485249e-002, -4.087637e-003, -5.558866e-002, -2.446007e-002, 3.485931e-002, -1.616255e-002, -2.146917e-002, 2.479889e-002, 1.399489e-002, -1.921914e-002, -5.916389e-003, 3.634147e-002, 1.210248e-002, -4.279877e-002, -2.664361e-002, 5.284114e-002, 4.943792e-002, -2.406219e-002, -3.732101e-002, -3.426691e-002, 8.093367e-003, 3.088971e-002, 2.504792e-002, 1.007737e-002, -1.114139e-002, 5.076194e-002, 7.272266e-003, 1.497941e-002, 7.526862e-002, 3.687512e-002, -5.533379e-003, 3.996048e-002, 4.208175e-002, -5.484686e-003, -1.660081e-002, -1.124187e-002, -3.734435e-002, -1.964898e-002, 3.269555e-002, 6.815482e-002, 5.238360e-002, 6.777941e-003, -3.589567e-003, -3.304280e-002, -1.129128e-002, 2.093235e-002, 2.656038e-002, 1.566906e-002, -5.355907e-003},


© ISO/IEC 2004 — All rights reserved

--`,,```,,,,````-`-`,,`,,`,`,,`---

Copyright International Organization for Standardization
Provided by IHS under license with ISO
No reproduction or networking permitted without license from IHS
Not for Resale

{1.399219e-002, 3.855409e-003, 7.097915e-003, -4.397365e-002, -5.547242e-002, 1.222888e-002, 6.752537e-003, -4.667130e-002, -6.834361e-002, -5.532493e-002, -8.149404e-003, 4.678145e-002, 5.569855e-002, 2.753856e-002, -2.121032e-002, -5.485369e-002, -5.834413e-002, -2.724840e-002, 9.219317e-003, 2.717125e-003, -1.133652e-002, -2.358443e-002, -2.279289e-002, -1.483738e-003, 1.110279e-002, -8.684557e-004, 6.099390e-003, -1.499674e-002, -1.001587e-003, 6.903322e-002, 4.278968e-002, -2.344310e-002, -4.975534e-002, -1.939636e-002, 3.175717e-002, 6.406028e-002, 6.289212e-002, 2.468147e-002, -1.464035e-002, -3.639430e-002, -3.246854e-002, 1.512819e-003, 4.803182e-002, 3.803943e-002, 9.948078e-003, -7.054310e-003, 1.173973e-002, 3.845504e-002, 1.761402e-002, -7.056259e-003, 7.507507e-003, 2.319836e-002, 1.404249e-002, 2.551896e-002, -5.179364e-003, -3.974993e-002, -4.609365e-002, -1.823716e-002, 1.107062e-002, 6.329458e-003, -1.987700e-002, -3.008367e-002, -3.619271e-002, -3.708745e-002, -2.405138e-002, 2.053959e-002, 7.453057e-002, 2.734515e-002, -6.251720e-002, -7.131707e-002, 5.221601e-003, 8.945184e-002, 1.801882e-002, -5.787453e-003, 2.237765e-002, 2.985650e-002, -5.804155e-002, -4.666365e-002, -2.172297e-002, 5.812332e-003, 1.585512e-002, 3.023113e-002, 2.723025e-002, 2.996279e-003, -2.191990e-002, -1.285342e-003, 2.996511e-002, 1.679003e-002, 7.210363e-003, 4.897667e-002, 1.024269e-001, 2.021174e-002, -1.233849e-001, -1.155410e-001, 3.334926e-004, 9.164362e-002, 1.581457e-002, 3.108972e-003, 4.619163e-002, 3.203457e-002, -1.373512e-002, 3.845153e-002, 3.902513e-002, 1.983962e-002, -9.779230e-003, -3.188496e-002, -3.355027e-002, -2.957449e-002, -1.631229e-002, -8.688029e-003, 4.067931e-002, 1.251452e-002, -8.127680e-003, 2.568141e-002, 8.621799e-002, 3.026383e-002, -5.193022e-002, -3.431579e-002, 6.773121e-003, 7.327224e-003, 1.876651e-002, 2.587387e-002, 3.123634e-002, 8.089082e-002, 6.360083e-002, 4.059332e-002, 1.916881e-002, 2.264122e-002, 1.245932e-002, -1.957224e-002, -1.235189e-002, 2.662607e-002, 7.008846e-002, 4.590984e-002, -3.946209e-002, -7.382624e-002, -8.553822e-002, -6.266783e-002, -1.048916e-002, -3.293218e-004, 1.647118e-002, -1.033705e-002, -2.141801e-002, -2.279267e-002, 9.919420e-004, -1.837428e-002, -4.568239e-002, -3.567344e-003, -8.666142e-003, -1.784034e-002, -1.122223e-002, 2.419999e-002, 3.955623e-002, 6.201268e-003, -3.116342e-002, -5.121348e-002, 4.854657e-002, 1.075741e-001, 5.905801e-003, -5.378453e-002, 1.745000e-002, 7.902062e-003, -2.328887e-003, 9.347667e-003, 7.963834e-002, 4.500034e-002, -8.551727e-003, 2.685955e-002, 1.216945e-002, -2.672418e-002, -7.429846e-002, -9.192639e-002, -5.640420e-002, -2.156220e-002, -2.726849e-002, -2.459652e-002, 2.897513e-002, -1.496362e-002, 5.076721e-002, -6.156938e-002, -1.356618e-001, 3.229540e-002, 1.313262e-002, -7.276194e-002, 1.680278e-002, -9.292738e-004, -4.928437e-002, -2.008349e-003, 1.019032e-001, -1.833824e-002, -1.539053e-001, 1.122030e-001, -3.923066e-004, -3.725958e-003, -3.358623e-003, -1.169541e-002, 2.260289e-002, 3.912424e-002, -2.027033e-002, 3.293644e-002, -1.869456e-002, -5.418716e-002, 1.096867e-001, 4.949992e-002, -1.291867e-001, 1.575060e-002, -2.273991e-002, -1.394920e-001, -4.065371e-002, -4.038099e-002, -6.464280e-002, -9.108023e-002, 1.860211e-002, -7.871485e-002, -1.460035e-001, 1.876610e-001, -1.602211e-002, -7.791660e-003, 4.006916e-003, -2.254339e-002, 2.115072e-002, 2.893493e-002, -1.635236e-003, 4.786588e-003, -6.289377e-003, -1.819663e-002, 2.817316e-002, 4.395543e-003, 1.705624e-002, 1.094401e-001, 2.445067e-002, -7.787184e-002, 3.436893e-002, 2.128480e-002, -1.236775e-002, -4.015787e-002, -4.809893e-002, -6.399966e-002, -9.039490e-002, 3.833160e-003, -2.991107e-002, -1.307776e-002, 2.274947e-002, -7.435000e-003, -2.171907e-003, 1.333867e-002, 3.676623e-002, 9.520073e-002, 1.019389e-001, 6.514720e-002, 1.910831e-002, -1.118859e-002, 5.389222e-002, 1.558364e-001, 4.506789e-002, 1.189794e-006, 5.932786e-002, 3.849657e-002, -9.168553e-003, 2.703157e-002, -1.337992e-002, -2.099554e-002, -3.053458e-002, 7.348392e-003, -5.970026e-003, -7.050966e-003, 1.614181e-002, 1.051286e-002, 6.735831e-003, -1.391065e-002, -2.215265e-003, 4.328492e-002, 2.182771e-002, -3.861551e-002, -8.919793e-002, -7.898246e-002, 2.429800e-002, 7.809469e-002, 4.334635e-003, 1.041479e-002, 4.681199e-002, 2.146603e-002, -4.584550e-002, 1.658304e-002, 4.737972e-002, -5.775759e-003, -1.371124e-002, -9.716643e-005, 9.882096e-003, -5.283059e-003, -1.501942e-003, 1.157734e-002, 4.560420e-002, 7.732061e-003, -4.198935e-002, -2.400906e-002, -6.510068e-002, -1.180688e-001, -1.339124e-001, -9.390872e-002, -1.082629e-002, -5.171539e-003, -3.655731e-002, -2.139928e-002, 3.585954e-002, 1.744605e-002, -7.007715e-002, -4.360688e-002, 7.942549e-002, 3.809970e-002, 2.452216e-002, 1.529549e-002, -4.283900e-003, -1.827585e-002, -3.760106e-003, 1.493331e-003, 6.349841e-002, 7.487060e-002, 1.441247e-002, 9.107605e-003, -2.805391e-002, -6.023661e-002, -5.052207e-002, -1.907039e-002, 3.735949e-003, -4.746103e-002, -4.615767e-002, -1.029549e-002, 6.278752e-002, 5.876810e-002, -1.531718e-002, -6.455595e-002, 3.708261e-002, 6.219464e-002, 6.181439e-002, 7.284515e-002, -2.066213e-002, -1.997168e-002, 2.306251e-003, -1.438468e-002, 3.087320e-002, 6.641897e-002, 5.500657e-002, 8.292640e-002, 8.868329e-002, 7.799008e-002, 6.249424e-002, 2.205953e-002, -1.683610e-002, -2.830075e-002, -9.948623e-003, 3.636568e-003, 5.359187e-002, 7.943174e-002, 5.624175e-002, -3.106611e-002, -1.656650e-002, 3.749220e-002, 4.104539e-002, 6.797351e-002, -1.968043e-002, -1.557787e-002, 1.366398e-002, -1.730943e-002, -8.625865e-003, 3.497587e-003, -3.476803e-002, -1.693639e-002, 2.871295e-003, 1.485908e-002, 2.365398e-002, 1.584456e-002, -3.562657e-004, 6.512739e-003, -6.199984e-003, -2.442486e-002, -2.585644e-002, 7.074237e-003, 5.128235e-002, -8.297241e-003, -7.937152e-002, -4.224709e-003, 2.949237e-003, -2.138169e-003, -

© ISO/IEC 2004 — All rights reserved


Copyright International Organization for Standardization
Provided by IHS under license with ISO
No reproduction or networking permitted without license from IHS
Not for Resale

6.359865e-003, 3.322014e-003, 2.634139e-002, -1.131980e-002, -3.215899e-002, -2.939757e-002, -7.943582e-002, -8.205779e-002, -4.326426e-002, -5.779546e-003, 4.324941e-002, 6.002262e-002, 5.305193e-002, 3.420703e-002, 3.430875e-003, 2.728918e-002, -1.080986e-002, -5.391405e-002, -1.138395e-002, 2.992745e-002, -2.258696e-002, 4.636905e-004, 2.961675e-002, -1.438520e-002, 1.705348e-002, 1.727071e-002, 2.287417e-002, -5.852290e-003, -3.439425e-002, -3.428686e-002, -8.902105e-002, -1.066622e-001, -5.739325e-002, 5.563402e-003, 5.015538e-002, 2.960959e-002, 1.840350e-002, 3.800923e-002, 1.805150e-002, 9.120555e-003, -5.729616e-003, -3.690031e-002, -3.956349e-002, 1.798619e-002, 5.492921e-002, 5.994773e-002, 5.430468e-002, -2.422325e-004, 3.101220e-002, 2.462599e-002, 9.263574e-003, 3.235457e-003, -2.349939e-002, -2.090865e-002, -6.170564e-002, -9.249234e-002, -4.234151e-002, 2.157585e-002, 9.684327e-003, -5.788191e-002, -6.078944e-002, 5.080944e-003, 3.557407e-002, 1.257867e-002, -1.330596e-002, -2.865641e-002, -1.756259e-002, 1.387613e-002, 2.403848e-002, -5.408607e-003, -1.051700e-002, -5.366249e-003, 3.637105e-003, 6.645694e-003, -1.401531e-002, -3.815609e-003, -5.924877e-003, 9.553293e-003, -1.588305e-003, -2.969868e-002, 6.882919e-003, 4.143031e-002, -1.182691e-002, -7.237012e-002, -6.292783e-002, -1.600577e-002, 4.726556e-002, 6.708477e-002, 1.615709e-002, -2.534089e-002, -1.339515e-003, 3.665558e-002, -2.378506e-002, -9.197449e-002, -8.373861e-002, -3.275170e-002, -1.489441e-002, 2.047569e-003, -2.546883e-002, -1.016774e-002, 1.155179e-002, 2.886003e-002, 4.522370e-002, 3.075627e-002, 5.124255e-002, 8.123220e-002, 5.242149e-002, -1.001484e-003, -1.264908e-002, 3.178338e-003, 3.514959e-002, 5.077072e-002, 3.599589e-002, 7.619094e-003, 1.232022e-002, 2.872983e-002, -7.197576e-003, -5.709584e-002, -6.937462e-002, -2.549423e-002},
{-4.957233e-002, 7.552354e-003, 1.569180e-002, 7.131298e-002, 4.086854e-002, -4.510779e-002, -1.007940e-001, -8.988926e-002, -4.684502e-002, 1.253121e-002, 5.582909e-002, 6.939814e-002, 7.558935e-002, 6.107353e-002, 4.775805e-002, 3.708520e-002, 3.805554e-002, 2.628823e-002, 1.246764e-002, 6.919597e-003, -7.201044e-003, -2.805767e-002, -3.072182e-002, -1.331773e-002, -3.069624e-002, 2.447072e-002, -2.054733e-003, 3.871989e-002, 1.208864e-002, -4.428962e-002, -3.508546e-002, 6.522889e-003, 3.408184e-002, 5.522092e-002, 4.373234e-002, 1.476522e-002, 9.537387e-003, 9.270996e-004, 1.126840e-002, 1.831135e-002, 2.843639e-002, 9.393155e-003, 2.940320e-003, -6.007340e-004, -1.596748e-002, -2.963895e-002, -3.787230e-002, -1.084422e-002, -1.111206e-002, 2.680628e-002, -3.022029e-002, -9.298445e-003, -1.990981e-002, -1.419209e-002, 3.412852e-002, 5.278532e-002, 4.460943e-002, 4.068922e-002, 1.562093e-002, -3.511446e-002, -7.917192e-002, -8.492274e-002, -4.728380e-002, -4.943409e-003, 1.923656e-002, 8.303397e-003, 1.273215e-002, -1.199850e-002, -6.677516e-002, -7.211942e-002, -3.404125e-002, 3.238284e-002, 8.895617e-003, 6.895787e-003, -4.346464e-002, -4.453869e-002, -3.402468e-002, -2.551447e-002, -3.462221e-002, -3.298543e-002, -1.271050e-002, 2.076910e-002, 3.622244e-002, 2.529487e-002, 1.511580e-002, 1.124395e-002, 1.475701e-002, 2.424525e-002, 2.558677e-002, 1.329530e-002, 4.836951e-002, 2.881661e-002, -5.219147e-002, -4.610576e-002, -4.814332e-004, 1.971631e-002, 1.729193e-002, -3.140928e-003, -1.025330e-002, -2.284073e-002, -3.545978e-002, -5.819858e-002, -5.617565e-002, -4.905869e-003, 4.863209e-002, 5.402174e-002, 1.870246e-002, -4.291009e-002, -7.830946e-002, 4.192311e-003, 8.669870e-002, 3.375196e-002, -6.732516e-002, -8.289312e-002, 2.219425e-002, 8.829255e-002, 2.273713e-002, -1.768067e-002, -5.599850e-002, -8.537435e-002, 5.012458e-003, -3.397451e-003, 2.569924e-002, -1.937229e-002, -2.960921e-002, -5.546805e-002, -4.192760e-002, -2.599748e-002, -1.593993e-002, -5.710698e-003, 4.926244e-003, -1.540709e-002, -5.476962e-002, -1.484732e-002, 1.327354e-001, 1.039159e-001, -9.821407e-002, -1.617769e-001, -7.808663e-003, 1.286961e-001, 9.186347e-002, 3.226028e-002, 3.038407e-002, 4.541689e-002, -2.802271e-002, -5.412355e-002, -1.628926e-003, -3.749856e-002, -4.473699e-003, 6.349355e-005, 5.353348e-002, 5.246660e-002, -1.307966e-002, -2.832452e-002, -1.126137e-003, -6.411786e-003, -4.085574e-002, -6.129404e-002, 3.606894e-002, 9.606638e-002, -5.393604e-002, -1.210486e-001, -5.888673e-002, 2.398261e-002, 9.951326e-003, -5.107351e-002, 2.182468e-004, 1.004272e-001, -8.069590e-003, -3.436462e-002, -2.386926e-002, -1.290397e-002, 9.790288e-003, 1.495788e-002, 7.983833e-002, 6.405706e-002, -1.282694e-002, 6.863320e-003, 3.260374e-003, -3.097739e-002, 2.255817e-002, -3.286747e-002, -4.367757e-002, 3.039295e-002, 1.747666e-002, -8.644356e-005, 6.814849e-003, -3.750757e-002, -2.880129e-002, -8.083302e-002, -7.405008e-002, 7.467507e-002, 3.947404e-002, 3.412394e-002, 4.001605e-002, 2.025517e-002, -1.836440e-002, -4.703613e-002, 6.720058e-003, 6.983107e-002, 7.682775e-002, 4.126817e-002, -3.277513e-002, -2.237324e-002, 1.386803e-002, -4.661195e-003, -6.218627e-002, 4.111769e-002, 6.138125e-002, 6.623417e-002, 1.197223e-001, 4.142340e-002, -1.227386e-002, -1.440273e-002, -2.604219e-002, 3.757197e-002, -6.861499e-004, -5.800286e-003, 8.666966e-003, 2.020915e-002, -6.199448e-003, -1.619477e-002, 1.666533e-002, 1.679186e-003, -6.858389e-003, 4.875492e-003, 2.108871e-002, 3.655029e-002, 8.070754e-003, -5.012847e-002, -5.277461e-002, 3.615949e-002, 8.795115e-003, 7.965070e-003, 9.158480e-002, 5.689680e-002, -6.414333e-002, -1.509548e-003, -2.617205e-003, -1.865260e-002, -1.894380e-002, -3.750422e-002, -8.631087e-003, 4.614231e-003, 2.146781e-002, 1.788153e-002, 3.533924e-002, 9.791948e-003, 3.304179e-003, 2.606684e-002, 4.337710e-002, 4.930367e-002, 7.246121e-003, -4.975229e-002, -2.424099e-002, 4.946388e-002, 4.991253e-003, -4.211655e-003, 3.359279e-002, 4.923246e-002, -1.055171e-001, -2.405725e-002, 5.503671e-002, 6.849663e-002,


© ISO/IEC 2004 — All rights reserved

Copyright International Organization for Standardization
Provided by IHS under license with ISO
No reproduction or networking permitted without license from IHS
Not for Resale

1.527172e-002, -1.113765e-002, 2.375050e-002, -1.700748e-002, 2.722511e-002, 2.931877e-002, 1.941777e-002, -3.050071e-002, -4.012171e-002, -2.270799e-002, -4.919563e-003, 6.968327e-003, 1.065820e-002, -2.042976e-002, 5.614329e-003, 3.581403e-002, 2.154854e-002, 1.269638e-002, 1.131219e-002, 2.823690e-002, -6.060267e-002, -6.339861e-002, 5.685830e-002, 1.027326e-001, 3.834956e-002, 1.380291e-002, 4.698808e-002, -3.387953e-002, 6.738207e-003, 4.184565e-002, 1.410269e-002, -3.710759e-002, -3.681059e-002, -1.564339e-002, -1.628633e-003, 2.253746e-002, 1.581555e-002, -4.516908e-002, -2.532618e-002, 2.494418e-002, 3.361345e-002, 1.714316e-002, 1.397217e-002, 6.604855e-003, -1.403984e-002, -5.992023e-002, 1.336182e-002, 7.243447e-002, 9.620809e-004, -7.850314e-003, 3.318681e-002, -2.892171e-002, -3.530000e-002, 1.155164e-002, 7.205220e-003, -4.621530e-002, -3.967281e-002, -8.215228e-003, 1.098012e-002, 7.735056e-003, -3.772701e-002, -9.964459e-002, -6.540098e-002, 3.448824e-003, 5.389098e-003, -4.964538e-003, 2.099836e-002, 7.449352e-003, -2.873272e-002, -2.442842e-002, -1.660274e-003, 3.694369e-002, -3.481918e-002, -1.419463e-002, 6.825260e-003, -2.619904e-002, -1.598862e-002, -5.078473e-003, -3.384209e-002, -6.673253e-002, -6.330184e-002, -3.574101e-002, -5.483061e-003, 5.871942e-003, -1.749696e-002, -6.388519e-002, -3.813098e-002, -7.245698e-003, -4.428725e-002, -5.120981e-002, 9.336020e-003, 6.314209e-003, -5.624889e-002, -2.456726e-004, 3.477581e-002, 2.335466e-002, -5.386565e-002, -1.108927e-002, -6.017017e-003, -1.329505e-002, -1.185220e-002, 2.423934e-002, 5.626208e-003, -3.220470e-002, -3.367274e-002, -3.265340e-003, 5.078559e-002, 9.640195e-002, 7.263962e-002, 9.440300e-003, -2.646797e-002, 1.636120e-002, -9.447441e-003, -1.663911e-002, 4.500424e-002, 2.073225e-002, -5.504404e-002, -1.200986e-002, 7.677136e-002, 4.862922e-002, -4.090905e-002, -7.182773e-003, -2.656513e-002, -2.442771e-002, -1.805195e-002, 1.282339e-002, 1.792467e-002, -1.574211e-003, -2.537865e-003, 3.043892e-002, 7.153809e-002, 6.860615e-002, 6.784672e-002, 3.502650e-002, -7.190772e-002, 3.309014e-002, 4.974435e-002, -2.642672e-002, -4.517533e-002, -6.322414e-002, -4.362712e-002, -8.285619e-003, 4.990276e-002, 5.908723e-002, -2.593577e-002, -1.002474e-002, -3.244250e-002, -2.434507e-002, -1.140179e-002, -9.911971e-003, -1.617180e-002, -3.448332e-002, -4.063143e-002, -1.738400e-002, -2.950518e-002, -9.456074e-002, -2.579367e-002, 4.891383e-002, 2.592871e-002, 6.646791e-002, -5.634255e-004, -8.860385e-002, -9.468663e-002, -5.780012e-002, 4.439240e-002, 8.740692e-002, -1.623551e-002, -1.893101e-002, -5.214177e-003, -9.857635e-003, -1.228544e-002, -1.963625e-002, 1.303266e-002, 3.462294e-003, -2.348801e-002, -3.433299e-002, -3.329345e-002, -4.007212e-002, -1.094055e-001, -1.613512e-001, -5.593533e-002, 5.777460e-002, 2.989906e-002, -1.586194e-003, 2.467388e-003, 2.204651e-002, -9.551006e-003, -1.082433e-001, 3.099153e-002, 1.219071e-001, -5.361311e-002, -1.232339e-001, 2.774326e-002, 9.122075e-003, 1.849409e-002, 9.214484e-003, 5.229794e-002, 3.895823e-002, 6.851662e-003, 1.080163e-002, 1.254740e-002, -2.584975e-002, -8.272322e-002, -6.104872e-002, 9.918034e-003, 3.124584e-002, 5.596595e-003, 5.070384e-003, 4.724515e-003, -3.213918e-003, -2.596142e-002, -4.414120e-002, 3.459875e-002, 8.685410e-002, -4.993954e-002, -1.541079e-001, 5.166715e-002, 6.160210e-002, 6.538243e-002, 2.986272e-002, 8.007130e-002, 8.153457e-002, 5.068173e-002, 6.201687e-002, 7.767098e-002, 5.768981e-002, 3.775838e-002, 5.291905e-002, 5.303939e-002, 2.445304e-002, -2.878026e-004, -6.960643e-004, -7.791763e-003, -4.936785e-002, -2.080515e-002, 3.151821e-002, 8.596738e-002, 1.017480e-001, 1.251585e-002, -9.645376e-002},
{-2.544126e-002, -1.672033e-002, -2.305535e-002, -3.864889e-002, -9.290668e-003, 7.269546e-003, -6.622717e-004, -2.173088e-002, -3.434277e-002, -3.098071e-002, -2.633042e-002, 1.740449e-002, 6.697915e-002, 8.303872e-002, 4.567785e-002, -2.476944e-002, -5.838039e-002, -4.489481e-002, -1.493839e-003, 5.252468e-002, 7.257126e-002, 3.612449e-002, -9.175444e-003, -3.956649e-002, -2.342762e-002, -1.120934e-002, -1.760973e-002, -1.992392e-002, 2.689494e-002, 1.388923e-002, 2.552705e-003, 1.214808e-002, 1.747670e-002, 3.783137e-004, -4.942964e-002, -6.380766e-002, -6.622579e-003, 6.298788e-002, 7.554860e-002, 3.532796e-003, -6.168697e-002, -6.633056e-002, -2.172886e-002, 2.073987e-002, 3.383589e-002, 2.368447e-002, -8.554644e-003, -2.197149e-002, -4.947031e-003, 3.899999e-003, -4.808036e-004, 6.288487e-003, 2.776380e-002, -1.995544e-002, -2.273901e-002, 4.901234e-002, 9.488431e-002, 6.911150e-002, -1.194121e-002, -9.491449e-002, -8.940461e-002, 1.484174e-003, 7.016154e-002, 1.753733e-002, -5.948178e-002, -8.705787e-002, -4.173039e-002, -3.099291e-002, -4.589273e-002, 3.187180e-003, 5.538512e-002, 1.064719e-001, 2.854467e-002, 2.337777e-002, 2.050333e-002, 2.168406e-002, -2.819968e-002, -9.702672e-002, -1.079841e-001, -1.920336e-002, 5.607747e-002, 6.837359e-002, 2.299006e-002, -4.548719e-002, -8.629444e-002, -2.682421e-002, 7.789756e-002, 5.513191e-002, -2.076436e-002, -4.115086e-002, 3.961464e-003, -2.094632e-002, -8.335571e-002, -5.964577e-002, -2.635562e-003, 4.828707e-002, 3.133707e-002, 3.149604e-002, 5.279155e-002, 3.879573e-002, 2.078227e-002, 8.791799e-003, -1.695614e-002, -1.949450e-002, -1.277670e-002, 9.699460e-003, 1.764413e-002, -2.014076e-002, -8.726114e-002, -5.821441e-002, 4.926750e-002, 7.528831e-002, 3.562852e-002, 4.156807e-002, 8.267457e-002, 3.283146e-002, -4.111787e-002, -3.787469e-002, -1.554534e-002, -2.867228e-002, 3.137704e-003, 1.308219e-002, 4.659115e-002, 6.675016e-002, 4.593239e-002, 3.766972e-002, -1.065415e-002, -5.117409e-002, -5.831762e-002, -1.516017e-002, 3.344812e-002, 3.357616e-002, -1.160324e-002, -3.540547e-002, 2.798269e-002, 5.751720e-002, 2.677237e-002, 2.476273e-002, 5.186043e-002, 1.864010e-002, 7.776028e-004, 6.558326e-002, 7.805410e-002, 1.911501e-002, -

© ISO/IEC 2004 — All rights reserved


Copyright International Organization for Standardization
Provided by IHS under license with ISO
No reproduction or networking permitted without license from IHS
Not for Resale

3.743712e-002, -2.209309e-002, -7.607677e-004, -1.251437e-002, -3.999580e-002, 2.057032e-002, -2.901893e-002, -7.277103e-002, -5.108394e-002, -1.191310e-002, 3.809085e-002, 5.157293e-002, 3.135985e-002, -7.476931e-003, 2.543781e-002, 5.382567e-002, 6.159023e-003, -3.100784e-002, -5.427019e-002, -4.181622e-002, 1.421862e-002, 1.209829e-001, 1.051992e-001, 5.181574e-002, 4.168257e-003, 7.267197e-003, -3.370314e-002, -1.762320e-002, -2.010692e-002, 2.309986e-002, 2.830839e-005, 7.378170e-003, -3.335509e-003, -3.623618e-002, 9.035770e-003, 9.188363e-004, -6.385750e-002, -1.280758e-001, -5.550983e-002, 6.452611e-003, -2.120517e-003, -5.025786e-003, -3.902409e-002, -1.538655e-002, -5.957589e-002, -1.867562e-002, -1.078206e-002, -4.624034e-003, 3.139518e-002, 1.812547e-002, -1.641796e-002, 2.265614e-002, 3.732806e-002, 1.160164e-002, 2.218115e-002, 1.632998e-001, 1.616570e-001, -3.669400e-002, -8.365659e-002, 4.851390e-002, -3.775866e-002, -1.252395e-001, -6.372993e-002, 1.407745e-002, 1.682337e-002, 3.219430e-002, 1.511764e-002, 2.778881e-002, -8.474638e-002, -1.305957e-001, -4.464628e-002, -2.641515e-003, 3.400274e-002, 3.057918e-002, 1.919325e-002, 2.317514e-002, 4.962016e-003, -3.648636e-002, -5.530482e-002, 1.201837e-002, 3.909992e-002, -2.598592e-002, -6.404020e-003, 4.708645e-002, 3.210885e-002, 1.825357e-002, -2.890574e-003, 3.761786e-002, 2.745275e-002, 4.356081e-002, 1.807043e-002, 3.216574e-002, 1.050338e-002, -1.321788e-002, 6.383748e-002, 1.308641e-001, -2.981564e-003, 5.199562e-003, 9.925096e-003, -1.008725e-002, -5.467725e-003, -1.329468e-002, -6.320291e-002, -1.054302e-001, -1.469117e-001, -1.485030e-001, -9.800114e-002, -2.316810e-002, 3.927727e-002, 3.035423e-002, -1.896292e-002, 1.493332e-002, -2.565145e-003, 1.996371e-002, 9.670775e-003, 8.421434e-003, 9.962352e-003, -2.539042e-002, 2.888408e-002, 7.069481e-002, -3.032752e-002, -3.298706e-002, -2.520688e-002, -4.110252e-002, -6.539550e-003, 6.321515e-002, 4.813996e-002, 1.594131e-002, -7.699270e-003, -5.119694e-003, 1.715645e-002, 3.002171e-002, 2.249782e-002, -2.606350e-002, -3.008853e-003, -2.950551e-002, -1.140767e-002, 1.255132e-002, -5.538183e-003, 7.018321e-003, 1.880853e-002, -4.886986e-002, -2.696422e-002, 5.392635e-002, -1.589157e-002, -2.384754e-002, -3.001625e-002, -5.057165e-002, -2.700414e-002, 7.795447e-002, 1.126158e-001, 1.163633e-001, 9.847809e-002, 8.326822e-002, 5.673856e-002, 7.954439e-003, -3.349467e-002, -2.474252e-002, 2.152597e-002, -3.941358e-002, -3.442766e-003, 1.114957e-002, -2.074031e-002, -8.154783e-003, 4.310721e-002, -2.198966e-003, -5.323731e-002, 1.294906e-002, -1.536976e-003, -9.091837e-003, -1.820657e-002, -4.064561e-002, -3.968320e-002, 8.184492e-003, 6.018958e-002, 9.356742e-002, 7.941930e-002, 4.826713e-002, -4.392153e-003, -4.015708e-002, -2.634143e-002, 3.439364e-002, 4.823122e-003, -4.220718e-002, -2.955259e-002, 3.904821e-003, -2.707527e-002, -2.998668e-002, 6.035040e-002, 3.831954e-002, -2.494035e-002, -2.523431e-002, -1.770251e-003, 6.667552e-003, 4.149433e-003, 1.376428e-003, -9.946006e-003, -7.506163e-003, -1.964121e-002, -2.848722e-002, -4.328608e-002, -5.833795e-002, -4.165473e-002, -3.609635e-003, 1.052288e-002, 6.545571e-003, 1.307731e-003, -2.526745e-002, -3.503581e-002, 1.712816e-002, -1.935747e-002, -5.831191e-002, 4.529730e-002, 5.282467e-002, -4.756645e-002, -5.895443e-002, -1.877089e-002, 5.347435e-003, 1.722709e-002, 3.659448e-002, 3.342088e-002, 2.245586e-002, -1.269249e-002, -4.216282e-002, -6.254033e-002, -5.223713e-002, -1.266574e-003, 7.113418e-003, -6.335123e-002, -1.042208e-002, 6.538127e-002, -4.227472e-004, -5.030914e-002, -4.799880e-004, 3.361420e-004, -1.105970e-002, 2.053746e-002, 6.580368e-002, -6.033849e-002, -1.038310e-001, -4.350982e-002, -6.854906e-003, 1.567128e-002, 4.977470e-002, 4.923958e-002, 4.017583e-002, 7.612268e-003, -1.772814e-002, -2.169395e-002, 2.720550e-003, 1.904420e-002, -1.543553e-002, -7.199542e-002, 2.605614e-002, 3.157455e-002, 7.150321e-003, -2.589303e-002, -3.278635e-002, -1.749197e-002, 5.697396e-002, 1.854139e-002, 4.509261e-002, -1.804883e-002, -9.592938e-002, -6.072959e-002, -8.234721e-003, -1.014750e-003, 4.031462e-002, 3.897125e-002, 3.261029e-002, 1.300439e-002, 5.704621e-003, 1.486048e-002, 2.356947e-002, 4.842668e-003, -1.493632e-002, 9.523616e-003, 5.599866e-002, -2.529675e-002, 2.114394e-002, 4.034496e-002, -2.874652e-003, -5.062708e-002, 3.862284e-002, 4.171892e-002, 3.907302e-003, 4.484936e-004, -3.651346e-002, -2.351330e-002, 1.427280e-002, -1.468854e-002, 1.131276e-002, 6.393939e-003, -3.272651e-003, -1.546909e-002, -2.391074e-002, -8.880942e-003, -9.148582e-003, -4.333314e-003, 1.172132e-002, 3.539734e-002, 6.394830e-002, 5.722957e-002, 3.042350e-002, -2.139332e-002, -1.423403e-002, 3.427495e-002, 8.365610e-002, 3.100245e-002, -5.389728e-002, -2.511312e-002, 1.244030e-002, 5.090507e-002, 3.682369e-002, -1.342592e-002, -3.098809e-002, -2.909558e-002, -4.008480e-002, -4.724759e-002, -5.039124e-002, -2.467693e-002, 2.291828e-003, 5.240177e-002, 4.816757e-002, -9.477827e-003, -2.849343e-002, 4.061252e-003, 4.631426e-003, 5.285031e-004, 2.796923e-002, 4.447105e-002, 1.646916e-002, -6.340681e-002, -9.480682e-002, -2.537971e-002, 5.537108e-002, 6.995358e-002, 6.021924e-002, -1.573561e-002, -5.906754e-002, -5.496986e-002, -7.548714e-002, -7.011628e-002, -6.582490e-002, -2.358814e-002, 4.532758e-002, 1.038760e-001, 6.825717e-002, -9.925191e-004, -3.360163e-002, -1.870113e-002, 1.033023e-002, 2.636676e-002, 4.558393e-002, 1.213487e-002, -4.706936e-002, -8.134346e-002, -6.699707e-002, -1.154784e-002, 6.725696e-002},
{2.276936e-003, 3.613844e-002, 2.874250e-002, 7.065889e-002, 6.905960e-002, 3.262371e-002, 1.088412e-002, -4.680726e-002, -9.561970e-002, -1.172727e-001, -1.019656e-001, -1.761139e-002, 7.587866e-002, 1.240356e-001, 1.088476e-001, 4.898497e-002, 2.430469e-002, 2.233431e-002, 5.772879e-002, 1.189693e-001, 1.421741e-001, 8.008429e-002, -1.415484e-002, -6.957741e-002,


© ISO/IEC 2004 — All rights reserved

Copyright International Organization for Standardization
Provided by IHS under license with ISO
No reproduction or networking permitted without license from IHS
Not for Resale

1.963836e-003, 1.864690e-002, -1.668403e-002, 2.009397e-002, 1.275137e-002, 1.633322e-002, 3.725870e-002, 1.433386e-002, -2.070651e-002, -5.014138e-002, -5.888887e-002, -1.994057e-002, 3.494517e-002, 6.577758e-002, 2.625214e-002, -5.515338e-002, -1.045804e-001, -1.031035e-001, -5.954623e-002, 3.052027e-002, 9.220725e-002, 6.391849e-002, -3.446285e-002, -1.087393e-001, 8.911385e-003, 1.051115e-002, -5.388451e-002, -1.429442e-002, -1.879638e-002, 2.163408e-002, 7.612275e-002, 8.851763e-002, 4.301082e-002, -1.576155e-002, -4.249154e-002, -1.649211e-002, 4.180590e-002, 8.104361e-002, 1.693305e-002, -1.108944e-001, -1.928763e-001, -2.071741e-001, -1.514229e-001, -1.619811e-002, 9.598851e-002, 9.999056e-002, 9.797640e-004, -1.145935e-001, 3.666501e-003, 1.689764e-003, -5.704511e-002, -2.539831e-002, -5.337324e-002, -5.332792e-003, 2.114518e-002, 2.232447e-002, 3.011471e-002, 7.349620e-003, -4.447737e-002, -6.473895e-002, -7.572825e-003, 7.978903e-002, 1.049386e-001, 1.107450e-002, -6.222732e-002, -8.639491e-002, -6.301344e-002, 5.189610e-002, 1.152418e-001, 6.706636e-002, -4.102019e-003, -3.353186e-002, -2.673067e-002, 3.052254e-003, -1.017007e-002, -4.100567e-002, -5.725415e-002, -2.719482e-002, -1.170444e-002, -1.298204e-002, 1.219445e-002, 4.220141e-002, 3.742779e-002, -1.089621e-002, -5.052510e-002, -4.716127e-002, -1.831809e-002, 9.434841e-003, 5.434358e-002, 6.852632e-002, 2.910855e-002, 2.449140e-002, -5.777241e-003, -4.395244e-002, 4.425509e-003, 4.478226e-002, -6.524639e-002, 1.333723e-003, 2.416200e-002, -3.494595e-002, -4.699104e-002, -1.041102e-002, 8.763566e-003, -9.489368e-003, -5.577491e-002, -8.008154e-002, -6.038645e-002, -2.228476e-002, 4.089578e-002, 4.639592e-002, -4.666693e-002, -8.272153e-002, 1.470347e-002, 6.661259e-002, -3.359859e-004, -4.492064e-002, -3.679718e-002, 1.296599e-002, -2.415697e-003, -8.876136e-002, -5.777988e-002, -4.234788e-002, -1.522843e-002, -3.174430e-002, -1.486627e-002, -2.420562e-002, -3.325265e-002, 6.815069e-003, 2.588387e-002, 4.024495e-002, -1.352129e-002, -5.426817e-002, 1.067680e-002, 8.936565e-002, 4.361720e-002, -4.921713e-002, -1.153932e-002, 4.330889e-002, -1.864097e-002, -2.509157e-003, 5.926497e-002, 9.779625e-002, 3.669384e-002, -3.249981e-002, 3.916112e-002, 1.130464e-002, 9.836074e-003, 3.826743e-002, 2.455574e-002, -5.330253e-002, -4.871233e-002, -2.607272e-002, 1.867968e-002, 5.016922e-002, -1.946805e-003, 3.621453e-005, 2.850171e-002, -5.621338e-002, -1.039137e-002, -1.010066e-002, 3.432674e-003, 3.723339e-002, -1.003245e-002, 7.694471e-002, 3.687836e-004, -1.913558e-003, 4.677253e-002, 7.448188e-002, 5.358565e-002, 4.296714e-002, 3.282667e-002, 8.986552e-002, 7.957267e-002, 1.650137e-002, 1.903448e-002, -3.139383e-002, -4.199081e-002, 3.059837e-002, -1.211308e-002, 2.970542e-002, 1.209434e-001, -6.195101e-002, 1.886679e-002, 2.280636e-002, -1.506254e-002, 1.383145e-002, -6.180929e-002, 2.247509e-002, -5.511166e-002, -5.019003e-002, -7.636599e-002, -5.381680e-002, -1.099040e-002, 5.046106e-003, -1.321427e-002, -1.356788e-002, -1.445674e-003, 2.507912e-003, 7.672128e-002, 8.409976e-002, -3.867475e-002, -1.341758e-001, -9.539409e-002, 1.643875e-002, 8.839792e-002, 4.773378e-002, 1.075740e-001, -6.075560e-003, 4.030321e-003, 3.715097e-002, -6.443640e-002, -2.337671e-002, 1.699805e-002, 4.967756e-002, 3.309952e-002, -4.602733e-002, -2.508887e-002, -8.379585e-003, -2.239828e-002, -5.944168e-002, -5.925227e-002, -2.392398e-002, 7.405805e-002, 1.211468e-001, 3.907713e-002, -1.830909e-002, -1.106378e-002, 1.581246e-002, 2.338629e-002, 5.881350e-002, 8.737093e-002, -5.884937e-002, 6.627844e-003, 2.414446e-002, -3.764995e-002, -4.004527e-002, 4.475808e-002, 3.784252e-002, 3.703091e-002, 2.126008e-002, -1.653864e-002, -3.490199e-003, -1.734524e-003, -2.313505e-002, -3.899425e-002, -1.455259e-002, 5.229532e-002, 7.856886e-002, 1.173971e-002, -4.103965e-002, -6.006693e-002, -7.118619e-002, -5.207009e-002, 3.694397e-002, 6.909987e-003, -4.498891e-002, 1.740939e-003, 1.909094e-003, -4.062369e-002, -3.150926e-002, 3.127273e-002, 2.797816e-002, -4.125158e-002, -4.396722e-002, 1.034606e-002, 7.611480e-003, 1.237375e-002, 1.661049e-002, -6.716963e-003, 1.890573e-002, 5.451563e-002, 5.273807e-002, -4.298792e-003, -5.615883e-002, -6.998635e-002, -6.610037e-002, -2.265995e-002, 2.015312e-002, -6.808431e-003, -4.918931e-003, -3.642208e-003, -7.951851e-003, -2.553863e-002, -9.514855e-003, -2.557295e-004, 3.177865e-002, -1.274059e-002, -4.333742e-002, 1.835574e-002, 1.210702e-002, 1.208993e-002, 1.001079e-002, 5.035418e-003, 4.796803e-004, 3.330667e-002, 5.113291e-002, 2.061798e-002, -7.473655e-003, -1.845059e-002, -2.834285e-002, -1.578057e-002, -3.239539e-003, 3.627981e-002, 1.754256e-002, -1.554629e-002, -4.612794e-003, 4.207494e-003, 5.051911e-003, 1.309079e-002, 1.351848e-002, -1.074666e-002, -1.994282e-002, -1.370592e-002, 2.510888e-003, 2.680016e-002, -3.793117e-003, -6.022701e-003, 1.738440e-003, -1.394357e-002, -1.440234e-002, -1.857394e-002, -2.664234e-002, -3.366786e-002, -3.095658e-002, -1.735064e-002, -1.279439e-004, 4.870499e-002, 2.187610e-002, -3.279353e-002, 4.126644e-003, 4.297474e-002, 2.865286e-002, 1.254205e-002, 1.363578e-002, 1.379669e-002, -6.560646e-003, -3.862774e-002, -1.565220e-002, 1.696293e-002, -3.062596e-003, -2.120292e-002, -1.654705e-003, -2.419057e-002, -2.568764e-002, -1.613154e-002, -1.419371e-002, -8.818560e-003, 2.469517e-002, -1.043194e-002, -5.740288e-002, -3.380165e-004, -7.636373e-003, -3.856818e-002, 5.897611e-003, 3.492331e-002, 3.665578e-002, -1.475700e-002, -1.630892e-002, -3.313086e-003, 2.322854e-002, -4.810029e-002, -2.855437e-002, -9.636400e-003, -1.030963e-002, -3.753137e-002, -6.406403e-003, -1.958775e-002, -2.901288e-002, -1.390217e-002, -4.332448e-003, 4.105669e-002, 7.598711e-002, 1.471057e-002, -1.971008e-002, 2.185242e-002, 2.649213e-002, 1.068729e-002, 3.731161e-002, 2.962980e-002, 2.659890e-002, -2.987043e-002, -2.619813e-002, -2.704715e-002, 4.117974e-003, -

© ISO/IEC 2004 — All rights reserved


Copyright International Organization for Standardization
Provided by IHS under license with ISO
No reproduction or networking permitted without license from IHS
Not for Resale

2.559367e-002, -1.294709e-002, -2.159190e-002, -9.725990e-003, -3.326841e-002, 1.939760e-003, 4.049343e-005, -2.922654e-002, -1.718969e-002, 8.466789e-003, 4.922570e-002, 7.385764e-002, 3.752226e-002, -1.404122e-002, -3.304092e-002, -1.793203e-002, 2.595302e-003, 9.852384e-003, -2.531872e-002, -2.108279e-002, -3.400845e-002, -1.930520e-002, -5.800755e-003, -7.228257e-003, 2.070511e-002, 2.959272e-002, -2.646840e-002, 7.798305e-004, -1.656534e-002, 1.584732e-002, 3.390569e-002, -1.792554e-002, -2.557570e-002, -7.451547e-003, 2.468412e-002, 3.694852e-002, 5.178828e-003, -3.087664e-002, -7.517648e-003, 1.649774e-002, -9.771241e-003, -5.199241e-002, -1.941159e-002, 3.977055e-002, 3.698778e-002, 9.021929e-003, 2.037169e-002, 2.194883e-002, 3.489123e-002, 5.505924e-002, -7.324074e-003, 3.602212e-003, 3.579465e-003, 3.788456e-002, 7.728526e-002, 1.905697e-002, -3.868805e-002, -3.850554e-002, -1.283241e-002, 5.499922e-003, -5.319760e-003, -1.737380e-002, -3.347488e-003, 3.905360e-003, 1.125811e-002, -1.592195e-002, 3.695270e-002, 5.531401e-002, 1.929877e-002, -1.970557e-002, -1.672325e-002, 6.714105e-003, 7.586997e-003, 6.127800e-002, 9.435102e-003, 7.674715e-003, 1.674617e-002, 3.424337e-002, 8.534376e-002, 3.718649e-002, -4.943911e-002, -5.330884e-002, -3.857626e-003, 1.884977e-002, 1.825341e-002, 1.055019e-002, -7.369461e-003, -1.370937e-002, -1.217746e-002, -5.041890e-002, -3.874643e-004, 1.516906e-002, -6.151653e-003, -2.451823e-002, -4.008307e-002, -2.512877e-002},
{-5.660376e-003, 3.295140e-003, 1.510774e-002, 4.132217e-002, 7.707266e-003, -2.774556e-002, -3.302226e-002, -9.768798e-003, 1.351753e-002, 1.898833e-002, 6.947729e-003, -2.491682e-002, -4.638221e-002, -3.677976e-002, 9.010533e-003, 6.882747e-002, 1.158232e-001, 1.179842e-001, 6.269410e-002, -2.057130e-002, -4.225333e-002, -1.198004e-002, 3.325396e-002, 6.773851e-002, -5.726335e-003, -1.342037e-002, -1.309532e-003, 2.067989e-002, 1.925088e-002, 8.506581e-003, -5.856671e-003, -2.688055e-002, -4.779020e-002, -4.642214e-002, -2.365642e-002, -1.211170e-002, -3.157820e-002, -5.474874e-002, -4.612080e-002, -5.805462e-003, 4.805669e-002, 5.243917e-002, -5.871773e-003, -1.053103e-001, -1.318988e-001, -8.293139e-002, -2.233468e-002, 2.520484e-002, 3.769049e-003, -2.622067e-002, -2.362388e-002, 1.764086e-002, 7.177207e-002, 7.853952e-002, 4.317180e-002, -4.702355e-003, -5.645951e-002, -4.585509e-002, 4.895511e-003, 6.992347e-002, 9.256278e-002, 4.901932e-002, -1.004286e-002, -2.604625e-002, 1.261750e-002, 3.572752e-002, -2.183135e-002, -1.131781e-001, -8.329784e-002, -9.519168e-003, 2.570154e-002, 1.878543e-002, 1.307300e-002, -2.597790e-002, -2.468236e-002, 2.491359e-003, 4.649467e-002, 3.598610e-002, 1.266430e-002, -1.604498e-002, -3.521882e-002, -3.860461e-002, -3.886162e-002, -1.673324e-002, 3.277273e-002, 5.453284e-002, 2.218547e-002, -1.998019e-003, 4.818599e-002, 8.992273e-002, 4.486252e-002, -3.225196e-002, 1.092054e-002, 3.509989e-002, -1.347131e-002, -5.337755e-002, 3.154304e-002, 3.156112e-003, -2.822873e-002, -8.426716e-002, -7.397846e-002, -6.875136e-003, -1.795272e-002, -5.100714e-002, 1.372723e-003, 7.510833e-002, 5.640193e-002, 9.248167e-004, -1.663452e-002, -4.874227e-003, -2.182574e-002, -2.594598e-002, 4.115355e-002, 8.778637e-002, 5.335484e-002, -3.002332e-003, -2.543583e-002, -4.792371e-002, 1.072441e-003, 6.770390e-002, 4.749148e-002, 3.670275e-002, 1.277141e-002, -8.185328e-002, -5.040669e-002, 2.293304e-002, -5.656497e-002, -1.200101e-001, -7.852960e-002, -2.355628e-002, -1.007302e-002, -1.534646e-002, 2.007754e-002, 8.568923e-002, 7.218638e-002, -1.455521e-002, -9.942534e-003, 2.939403e-002, 1.921422e-002, 1.232187e-002, -1.611165e-002, 9.780425e-003, 3.824263e-002, 5.298140e-002, 1.130227e-002, 2.608566e-002, 9.373355e-002, 5.540211e-002, 1.814058e-002, 1.762540e-002, -4.722724e-002, -3.887829e-002, 5.828000e-004, 4.652383e-002, 2.553742e-002, -3.836093e-002, -3.561630e-002, 5.989311e-002, 1.075964e-001, 6.812259e-003, -7.346634e-002, -7.849402e-002, -8.356416e-002, -1.929428e-003, 3.892421e-002, 1.895956e-002, 1.874637e-002, 5.808490e-003, -4.458712e-002, -4.408474e-002, 3.097270e-002, 7.411641e-002, 1.791336e-002, 2.319509e-002, 7.514959e-002, 8.305590e-002, -6.302770e-003, -5.984141e-002, -3.529531e-002, 4.137575e-002, 4.864960e-002, -5.347912e-002, -5.702939e-002, 1.129176e-002, 1.940416e-002, -9.652538e-003, -9.294400e-002, -7.279154e-002, -2.704258e-002, 1.977205e-003, 8.241998e-002, -3.677216e-002, -9.381094e-003, -3.103964e-002, -7.584662e-002, -3.397051e-002, -4.532429e-002, -3.737841e-002, -5.551818e-002, -1.814008e-002, 8.867106e-002, 1.420721e-002, -2.936322e-002, 6.854977e-002, 1.063032e-001, -9.725839e-002, -1.578778e-001, 4.266881e-003, 8.339772e-002, 7.455716e-002, -1.957056e-002, -9.019205e-002, -5.518847e-002, -1.702063e-002, 4.526945e-002, 1.138312e-002, 2.141716e-002, 2.138018e-002, -5.814500e-002, -1.589561e-002, -3.156242e-002, -2.542777e-002, -1.946722e-002, 1.663161e-002, 4.545662e-002, 1.847573e-002, -1.350950e-003, 2.451414e-002, 3.486274e-002, -2.162215e-002, -6.074607e-002, 8.125406e-004, 6.224325e-002, 8.701984e-002, 5.488063e-002, 1.342346e-002, 3.890853e-002, 1.218981e-002, -5.313637e-002, -8.972548e-002, 1.479083e-002, 4.456334e-002, -1.877837e-002, 1.082125e-002, 1.880436e-002, 5.390133e-002, 6.744729e-002, 5.503535e-002, 2.201265e-002, -1.548622e-002, -2.239632e-002, 1.601993e-002, 6.954200e-002, 5.934035e-002, 5.490168e-002, -1.889359e-002, 1.468921e-003, 2.495306e-002, 3.225517e-002, 5.411303e-002, 1.146726e-001, 7.679797e-002, -4.670240e-002, -1.169101e-001, -4.733007e-003, 1.199444e-002, 1.349308e-002, 2.840796e-002, 2.699971e-002, 4.244772e-002, 5.236697e-002, 1.566464e-002, -2.234014e-002, -3.879615e-002, -1.954001e-002, 3.219938e-002, 8.896461e-002, 8.591390e-002, 2.011283e-002, -3.313234e-002, -6.143287e-002, -3.566064e-002, -1.096621e-002, 1.952051e-002, 7.493427e-002, 1.442380e-001, -4.186121e-003, -9.657109e-002,


© ISO/IEC 2004 — All rights reserved

--`,,```,,,,````-`-`,,`,,`,`,,`---

Copyright International Organization for Standardization
Provided by IHS under license with ISO
No reproduction or networking permitted without license from IHS

Not for Resale

5.508786e-005, -4.111456e-002, 2.713604e-002, 5.064723e-002, 1.999302e-002, 6.323963e-003, 1.607626e-004, -2.333019e-002, -4.514203e-002, -4.379095e-002, -6.745846e-003, 4.160671e-002, 5.448946e-002, 4.892917e-003, -4.250588e-002, -2.823304e-002, -6.732196e-002, -5.542515e-002, -2.632097e-002, 8.988780e-003, -2.720682e-002, 5.889057e-002, 5.414679e-002, -4.367907e-002, 1.896571e-002, -4.882728e-002, 1.786433e-002, 5.258865e-002, 3.440578e-002, -1.993618e-003, -4.602896e-002, -7.771718e-002, -7.456184e-002, -5.231220e-002, -1.277827e-002, -1.234793e-002, -4.095950e-002, -7.593292e-002, -6.749301e-004, 2.107075e-002, -2.356234e-002, -3.033441e-002, -1.060707e-002, 5.708348e-002, 4.685162e-003, -5.549192e-002, -2.275772e-002, -2.010494e-002, 4.419240e-002, -3.342608e-002, 1.726361e-002, 3.769908e-002, 2.421653e-002, 9.732517e-003, -3.010993e-002, -5.358662e-002, -4.873026e-002, -1.456863e-002, 1.380532e-002, 1.256200e-002, -4.662616e-002, -4.080114e-002, 5.276550e-002, 5.155489e-002, 5.512990e-003, -2.334693e-002, -4.753778e-003, 6.737861e-002, 4.028589e-002, 1.378310e-003, -1.068911e-002, -2.820701e-002, 5.464026e-002, -6.905873e-003, 1.239149e-002, 2.341058e-002, -3.494972e-003, 6.095549e-003, 6.908141e-003, -3.944392e-003, 2.196838e-002, 4.947829e-002, 5.640024e-002, 4.540158e-002, 1.308269e-002, -4.406927e-002, -7.019374e-002, -8.994150e-002, -2.727974e-003, 3.486086e-003, -2.335663e-002, -2.538627e-002, -9.910085e-002, -3.092278e-002, 4.534953e-002, 3.287196e-002, 4.447460e-002, 7.880768e-003, -9.460271e-003, 7.227530e-003, -2.494354e-002, -2.346248e-002, -7.361032e-003, -1.699132e-002, 2.044196e-004, 1.462028e-002, 3.029971e-002, 4.939634e-002, 4.182887e-002, -5.534037e-003, -3.366899e-002, -6.834691e-002, 6.621078e-002, 7.558654e-002, 5.914770e-002, 6.841281e-002, -1.037516e-001, -7.887106e-002, 9.758785e-004, 1.445736e-002, 1.469731e-002, 9.878986e-003, -1.340207e-002, -5.245981e-003, -3.265708e-002, -3.023059e-002, -1.508677e-002, -3.515574e-002, -4.867501e-002, -3.391876e-002, -8.891054e-003, 4.857156e-003, -5.011321e-003, 3.642934e-002, 2.306198e-002, -4.460161e-002, 5.304036e-002, 1.972133e-002, -4.911809e-002, 4.357749e-002, 7.067315e-003, -2.333862e-002, -2.654672e-002, -4.901821e-002, 1.042979e-002, 6.851333e-003, -2.393681e-002, -1.167927e-002, -2.131187e-002, -2.272431e-002, -7.323826e-003, -2.436486e-002, -5.651173e-002, -4.207692e-002, -2.088491e-002, -2.986805e-002, -2.198875e-002, 5.657418e-002, 6.517695e-002, -1.779954e-002, 4.615724e-002, 3.793850e-002, -1.911988e-002, -6.111320e-003, -1.685553e-002, 1.198369e-004, -4.696581e-004, -6.027137e-002, -7.115697e-003, 3.143072e-003, -2.120898e-002, -6.802514e-003, -1.378092e-002, -1.064937e-002, 1.359339e-002, 4.340673e-003, -2.137774e-002, -8.066957e-003, 2.131500e-004, -6.445077e-003, -1.136748e-002, 2.172016e-002, 1.339527e-002, -3.298876e-003, 5.865320e-002, 2.128187e-002, -1.526121e-002, -3.939519e-003, -1.825166e-002, 1.369438e-002, 3.729535e-002, -1.208380e-002, -8.501479e-002, -3.558087e-002, -2.723834e-002, -1.014501e-002, -1.118640e-002, -3.570164e-003, 2.879960e-002, 4.637761e-002, 3.913599e-002, 5.230950e-002, 5.993622e-002, 4.622449e-002, 2.425252e-002, 1.133998e-002, -7.762648e-003, -1.779898e-002, -9.814991e-003, -7.788585e-002, -7.620267e-002, -4.528877e-002, -2.253804e-002, 2.244150e-002, 6.100670e-002, 4.344268e-002},
{-9.141651e-002, -5.120846e-002, -4.480991e-002, -2.201982e-002, 4.345147e-003, -1.206083e-002, 1.411391e-002, 4.197810e-002, 4.108812e-002, 3.877362e-002, 3.745235e-002, 5.374269e-002, 6.588966e-002, 5.844952e-002, 4.841706e-002, 3.369385e-002, 7.418711e-003, -1.643785e-002, -1.085519e-002, 3.335130e-002, 7.147293e-002, 6.710964e-002, 2.348628e-002, 8.833521e-003, -3.111688e-002, -4.809885e-003, -3.894900e-002, -1.554565e-002, 2.304116e-003, -2.074259e-002, -3.031339e-003, -1.060450e-003, -1.031405e-002, -2.412625e-002, -4.912569e-002, -6.312560e-002, -4.616541e-002, -2.864433e-002, -1.340472e-002, -1.035229e-002, -2.979963e-002, -5.996725e-002, -6.297029e-002, -1.317527e-002, 1.700179e-002, -3.841328e-004, -4.839372e-002, -4.968186e-002, 3.548837e-002, 2.706449e-002, -2.456736e-002, -8.887665e-003, 5.607059e-003, -3.879060e-002, -2.555502e-002, -8.970170e-003, 2.111532e-002, 3.617189e-002, 2.287390e-002, -2.332646e-002, -5.455745e-002, -6.873830e-002, -5.076700e-002, -2.750938e-002, -3.429551e-002, -8.026496e-002, -8.980247e-002, -4.047355e-002, -2.567520e-003, 1.074074e-002, 3.580893e-002, 7.777210e-002, 6.367711e-002, 2.782997e-002, -9.425966e-003, 8.327545e-003, 1.871377e-002, -3.341549e-002, -4.541464e-002, -4.801102e-002, -5.836356e-002, -3.693616e-002, -1.067786e-004, 1.883463e-002, 1.159469e-002, -2.084904e-002, -5.908554e-003, 3.650676e-002, 4.995998e-002, -1.379631e-002, -4.069741e-002, -1.622516e-003, -4.731615e-004, 1.400916e-003, 2.809843e-002, 5.551350e-002, 3.274400e-002, 9.181690e-003, 6.671156e-003, 1.050346e-002, 5.403684e-002, 3.618553e-002, 3.724055e-002, 1.079983e-002, -3.754945e-002, -4.674482e-002, 3.851755e-003, 4.997320e-002, 8.739633e-002, 4.404748e-002, 9.487804e-004, 3.731348e-002, 5.640911e-002, 1.324559e-002, -8.990641e-004, 3.200004e-002, 2.443503e-002, 1.441575e-002, 1.080925e-002, 1.209705e-002, -1.728277e-002, -1.743245e-002, 1.604683e-002, 1.937167e-002, 9.621318e-002, 2.139524e-002, 2.574691e-002, 4.945483e-002, 1.670615e-002, -1.265621e-002, -2.752531e-002, -2.632538e-002, 4.188272e-002, 6.777199e-002, 1.109770e-002, -3.099170e-002, -1.314957e-002, 7.554052e-004, 1.618595e-002, 7.898546e-002, 9.545933e-002, 3.205409e-002, -1.778065e-002, 6.712369e-003, -1.136293e-002, -5.506295e-003, 3.874582e-002, 2.687056e-002, 9.567767e-003, -1.125709e-001, -1.038430e-002, 8.400859e-002, 4.713392e-002, 1.942229e-004, -3.595569e-003, -2.931156e-002, -8.716541e-002, -4.156625e-002, 5.489715e-002, -4.820840e-002, -2.370761e-002, 2.626142e-002, 9.915910e-003, 5.649790e-002, 3.526707e-003, -1.185972e-001, -8.917919e-002, 2.835224e-002, -

© ISO/IEC 2004 — All rights reserved


Copyright International Organization for Standardization
Provided by IHS under license with ISO
No reproduction or networking permitted without license from IHS
Not for Resale

2.653637e-002, 4.160267e-002, 2.382560e-002, -3.390666e-002, -7.426445e-002, -8.200594e-002, 2.448436e-002, 4.610593e-002, 2.519495e-002, 4.084619e-003, 2.595916e-002, 5.055352e-002, -7.323491e-002, -1.094545e-001, 5.384524e-002, -4.778046e-002, -3.676907e-002, -5.979274e-002, -1.153762e-001, -5.860069e-002, -8.002761e-002, -1.367253e-001, -8.683766e-002, -1.867413e-002, -2.124701e-002, 3.644287e-003, -2.664765e-002, -5.627993e-002, -3.651671e-002, -1.169135e-002, 1.240646e-002, -3.799955e-003, 6.120753e-002, -3.927831e-002, -3.328018e-002, 8.933866e-002, 1.079102e-004, -9.602215e-002, 7.183271e-002, -3.125076e-002, 2.776021e-002, -6.084321e-003, -1.057873e-001, -4.480302e-002, 4.111814e-002, -9.175741e-003, -1.149079e-002, -4.789803e-002, 8.218134e-003, 1.861026e-002, 8.699377e-004, -1.366333e-002, 9.189128e-003, 3.486947e-002, 1.086858e-002, -4.724349e-002, -1.052369e-002, 2.189541e-002, 6.000751e-002, 8.423245e-002, -1.320679e-002, -5.933027e-002, 8.759517e-002, 1.587795e-002, 1.003309e-001, 4.679961e-002, 2.032746e-003, -1.101269e-002, 1.346080e-001, 1.005273e-001, 7.280371e-002, 5.309260e-002, 1.387935e-002, 2.838836e-002, 1.032962e-002, 2.392137e-003, -1.500012e-002, 1.437465e-002, -6.413548e-003, -5.264364e-002, -4.684379e-002, -6.224684e-003, 3.312340e-002, 2.263836e-002, -7.100686e-002, -5.979110e-002, 5.579179e-002, 1.139869e-002, 7.994310e-002, 1.334275e-002, 1.807779e-002, -8.467870e-003, 1.175310e-001, 1.091278e-001, 6.021726e-002, 4.300289e-002, -1.245853e-002, 9.007620e-003, 8.980767e-003, 4.487410e-003, -3.012872e-002, -1.643466e-002, -1.657495e-002, -3.927024e-002, -3.051655e-002, 7.683147e-004, 1.340938e-002, -1.767037e-002, -7.159074e-002, -2.247723e-002, -2.215846e-002, -2.103678e-002, 2.647897e-004, -4.784566e-002, -1.675105e-002, 1.316836e-002, 8.119612e-003, 4.349541e-002, -1.365310e-002, -2.169077e-002, -2.805221e-002, -2.184729e-002, 4.511646e-003, 1.089283e-002, -2.924861e-002, -4.450565e-002, -1.268612e-002, -2.261694e-002, -1.817537e-002, 5.560424e-003, 1.590774e-002, 1.922361e-002, -9.508398e-005, -1.985489e-002, -7.022808e-002, -3.801897e-002, -4.038776e-002, -6.253568e-002, -1.613632e-002, 5.192045e-002, -5.027886e-002, -9.734526e-002, -8.832834e-002, -7.970123e-002, -1.645438e-002, -2.178048e-002, 4.175681e-003, 3.681683e-002, 1.513262e-002, -4.062809e-002, -3.280859e-002, -1.789719e-002, 2.085595e-003, 2.560592e-002, 4.685666e-002, 4.867729e-002, -2.162121e-003, -3.947810e-002, -1.501796e-002, -3.205683e-004, 9.703302e-004, -2.207659e-002, 2.495247e-002, 7.773198e-002, -2.576371e-003, -1.135096e-001, -1.664661e-001, -1.361304e-001, 8.472048e-004, -2.335620e-002, 1.599694e-002, 3.142213e-002, 6.796420e-002, 3.170381e-002, 8.068639e-003, 1.394717e-002, 3.919240e-002, 6.550946e-002, 7.056657e-002, 4.675228e-002, 1.638136e-002, 1.768373e-002, 2.059357e-002, 2.358622e-002, 5.224393e-002, 2.313612e-002, 3.964072e-002, 4.518566e-002, 6.058991e-004, -3.614170e-002, -3.356007e-002, -8.006881e-002, 7.894619e-003, -1.232966e-003, 1.438545e-002, 1.850777e-002, 4.809914e-002, 5.050333e-002, 5.172000e-002, 6.820412e-002, 9.143804e-002, 9.545438e-002, 4.691633e-002, 1.844919e-002, 4.416597e-002, -1.453051e-002, -5.969371e-002, 5.478634e-003, 7.172740e-002, 2.522615e-002, -1.424535e-002, -4.353706e-002, -2.583543e-002, -4.894584e-002, 4.724428e-002, 6.784795e-002, 2.498315e-003, 2.257614e-002, 2.222351e-002, -5.804936e-003, 2.131068e-003, -2.230042e-002, -4.000771e-002, -2.283618e-002, -1.390726e-002, -3.317717e-002, -4.829759e-002, 7.338836e-003, 4.843797e-002, -4.678860e-002, -2.348566e-002, 2.150305e-002, 5.067816e-003, -1.134650e-002, 9.803927e-003, -4.045112e-003, 7.015718e-002, 4.300567e-002, 8.145164e-003, 5.022272e-002, -1.306849e-002, 2.010433e-002, 3.889495e-002, -1.539787e-002, -1.868002e-002, -4.058861e-002, -8.618892e-002, -9.014578e-002, -8.641690e-002, -6.842821e-002, -2.935808e-002, 3.031619e-002, 3.194317e-002, -1.842657e-002, 1.005341e-003, -4.631218e-002, -8.503834e-002, -3.408590e-002, 6.355030e-002, 9.178324e-003, 2.506630e-002, 1.090269e-001, 2.963036e-002, 1.525282e-004, 8.908002e-003, 2.023399e-003, 3.737915e-002, -1.800171e-002, -1.289319e-002, -7.857924e-003, -5.211734e-002, -5.292134e-002, -2.970280e-002, 1.546582e-004, 1.793349e-002, 1.813388e-002, 3.547463e-002, 3.760032e-002, 1.847276e-002, -2.223530e-003, 1.997727e-002, 5.855946e-003, 2.135244e-002, -8.202125e-002, -6.592032e-002, 7.853040e-002, 4.797598e-002, -1.981543e-002, 4.207505e-002, -2.048559e-002, 8.116374e-004, -3.227428e-002, -1.130171e-002, 4.688361e-002, 2.364134e-002, 1.761549e-002, 4.277183e-002, 4.727342e-002, -1.573021e-003, -3.165090e-002, -6.556086e-003, 3.561573e-002, 1.175482e-002, -1.661498e-002, 8.517188e-004, -3.909898e-002, 7.855874e-003, 3.380938e-003, -4.842241e-004, 5.329475e-002, 1.866526e-002, -3.554259e-002, 6.065065e-002, -2.669984e-002, -3.471334e-002, -5.753577e-002, -3.593705e-002, 5.817116e-002, 7.148841e-002, 6.319041e-002, 7.587509e-002, 3.883203e-002, -4.128917e-002, -8.052900e-002, -7.533102e-002, -4.723164e-002, -2.847643e-002, 8.059438e-003, 6.307579e-002, 1.160334e-002, 4.121871e-002, 3.666588e-002, -1.192220e-002, -7.173186e-003, -1.849629e-002, -4.021362e-002},
{-1.640392e-002, 3.974638e-002, -1.494412e-002, 2.376529e-003, 6.123770e-002, 7.969164e-002, 1.019205e-001, 1.142878e-001, 7.642988e-002, 1.223888e-002, -5.696516e-002, -8.593848e-002, -6.864756e-002, -1.809499e-002, 2.497169e-002, 3.698177e-002, 2.201151e-002, -6.682615e-004, -1.372909e-002, -1.748758e-002, -9.034884e-003, 1.955322e-002, 4.535507e-002, 5.454796e-002, -3.105609e-002, 1.320236e-002, -4.929438e-002, -2.041399e-002, 6.171081e-003, -3.805247e-002, -2.057260e-002, 2.805365e-002, 3.239314e-002, -1.511370e-002, -6.817154e-002, -8.961172e-002, -5.800529e-002, 2.043439e-003, 4.030622e-002, 3.707161e-002, 1.424757e-002, -1.147464e-002, -3.286686e-002, -4.091633e-002, -2.489469e-002, -4.012364e-004, 2.734212e-002, 3.796350e-002, -


© ISO/IEC 2004 — All rights reserved
--`,,```,,,,````-`-`,,`,,`,`,,`---

Copyright International Organization for Standardization
Provided by IHS under license with ISO
No reproduction or networking permitted without license from IHS
Not for Resale

4.441744e-002, -1.022701e-002, -6.573782e-002, -4.101454e-002, -6.154508e-002, -1.500875e-001, -9.063069e-002, 1.218957e-002, 5.171518e-002, 2.924217e-002, -2.700154e-003, -2.488248e-002, -1.595223e-002, 1.518373e-002, 3.867889e-002, 1.536961e-002, -1.428738e-003, -1.797283e-002, -3.745083e-002, -3.962006e-002, -1.495843e-002, 4.363227e-003, 2.572351e-002, 5.819242e-002, -2.895790e-002, -6.264880e-003, -3.469848e-002, -8.773012e-003, -3.159815e-002, -1.058262e-001, 1.896612e-002, 9.628411e-002, 6.377712e-002, -8.666678e-003, -4.722365e-002, -4.167579e-002, -2.100263e-002, 9.262579e-004, 7.467348e-003, -2.099555e-002, -3.229015e-002, -2.896383e-002, -3.257169e-002, -1.340933e-002, 1.030405e-002, 1.004230e-002, 3.126118e-004, 1.780280e-002, 1.050834e-002, 2.201066e-002, 3.777725e-002, 6.900928e-002, 2.346505e-002, -2.601999e-002, 1.052915e-001, 1.152358e-001, 3.334542e-002, -3.244097e-002, -3.997021e-002, 7.829753e-003, 6.428755e-002, 7.244701e-002, 5.894846e-002, 2.451992e-002, -3.937499e-003, -1.776764e-002, -4.092029e-003, 2.254061e-002, 3.841070e-002, 4.041796e-003, -3.614410e-002, -4.342854e-002, 3.789302e-002, 2.531746e-002, 5.470816e-002, 3.511399e-002, -2.600200e-002, -3.419326e-002, 8.020851e-002, 7.060879e-002, 8.662522e-003, -2.561185e-002, -4.782775e-003, 1.744009e-002, 5.218782e-003, -8.423453e-003, -6.282995e-003, 2.764373e-002, 5.502888e-003, -3.540785e-002, -1.900201e-004, 3.863218e-002, 1.245517e-002, -5.070293e-002, -7.168861e-002, -6.444123e-002, -1.175169e-002, -4.525551e-002, -1.878830e-002, -3.945551e-002, -7.213794e-003, -1.217911e-002, 2.713503e-002, 8.159593e-004, 4.641306e-003, 1.453224e-002, 4.747546e-002, 6.587414e-002, 2.409694e-002, -1.034965e-001, -1.388853e-001, 1.694448e-002, 6.012953e-002, -3.152183e-002, -3.081246e-002, -1.273485e-002, -7.260085e-003, -1.279321e-002, -4.169141e-002, -1.589040e-002, 6.417374e-003, -1.786992e-002, -4.956287e-002, -6.277868e-002, 9.381750e-003, -3.702558e-002, -4.468438e-002, -6.437689e-002, 2.465853e-002, 1.394033e-002, -3.749429e-002, -5.045461e-002, 2.853123e-002, 9.465711e-003, -7.636556e-002, 6.402842e-002, 1.207851e-001, 1.858005e-002, -3.672207e-002, -4.678043e-002, 6.457727e-002, 6.122877e-002, 2.375292e-002, 1.927754e-002, 5.487784e-002, 7.196786e-002, 1.458827e-002, -2.313547e-002, 3.814863e-002, 6.436008e-003, 5.329094e-003, -5.967095e-003, -2.188338e-002, -3.912846e-002, -5.005089e-002, 3.374282e-003, 8.990165e-002, 8.815531e-002, -6.705173e-002, -4.828367e-002, 5.169800e-003, -4.058244e-002, -4.606249e-002, -8.118870e-002, 3.368676e-003, 9.348749e-002, 8.179472e-002, -1.048499e-003, 6.311287e-003, 8.681825e-004, 2.459255e-003, 1.976203e-002, 8.339282e-002, 4.214344e-002, 2.342978e-002, 2.035079e-002, -1.095483e-003, -3.254578e-002, -3.030580e-002, 1.270531e-003, 4.299254e-002, 1.111887e-002, -1.243190e-001, -9.387712e-002, -1.283547e-002, -5.144021e-002, -3.037596e-002, -6.018569e-002, -1.019104e-001, -6.827368e-003, 1.588398e-002, 1.504406e-002, -2.636117e-002, -4.940812e-002, -1.430515e-002, 2.458415e-002, 7.425515e-002, 2.474386e-002, -1.739261e-002, -5.143417e-002, -8.199654e-002, -1.008933e-001, -7.160311e-002, -1.614828e-002, 4.255853e-002, 2.738529e-002, -7.254926e-002, -1.533383e-002, 1.839843e-002, -8.041364e-003, 2.948741e-002, 2.022559e-002, -8.014076e-002, -3.549396e-002, 1.289293e-002, 1.510514e-002, -1.128499e-002, -4.160522e-002, -6.330619e-003, 8.231599e-003, 4.521016e-002, 6.701056e-003, -2.079974e-002, -5.075054e-002, -6.767998e-002, -5.685619e-002, -2.573085e-002, 2.319788e-002, 8.959245e-002, 6.558384e-002, 2.495351e-002, 5.242088e-002, 2.259190e-002, 3.167819e-003, 6.967144e-002, 8.794938e-002, 1.634164e-002, -1.056952e-003, 5.432102e-002, 6.985673e-002, 1.245899e-002, -1.211046e-002, 1.467163e-002, -2.237193e-002, 1.819818e-002, -8.476657e-003, -3.693361e-002, -4.830015e-002, -5.045928e-002, -3.212741e-002, -5.644960e-003, 3.803701e-002, 9.666705e-002, 7.365761e-002, 6.594753e-002, 5.084281e-002, 1.098471e-003, -2.307813e-002, 5.795316e-002, 1.025320e-001, 7.208587e-002, 3.755159e-002, 7.038829e-002, 8.758937e-002, 2.522808e-002, 1.271331e-002, 2.525764e-002, -4.141187e-002, -1.146665e-003, -4.087922e-003, -3.025756e-002, -5.528329e-002, -5.872405e-002, -5.050080e-002, -2.703324e-002, 1.614807e-002, 4.310110e-002, 2.513478e-002, 4.373022e-002, -5.877449e-003, -5.295686e-002, -4.523908e-002, 7.015973e-003, 4.273188e-002, 6.915010e-002, 2.652554e-002, 4.552594e-002, 7.584294e-002, 7.354843e-003, 1.868901e-002, 3.568568e-002, -3.746680e-002, -1.980998e-002, -7.252423e-003, -1.960434e-002, -4.307517e-002, -5.752783e-002, -6.003633e-002, -4.797651e-002, -3.073020e-002, -3.659927e-002, -6.855933e-003, 1.859681e-002, -5.580176e-002, -6.851710e-002, -4.353304e-002, -1.970534e-002, -2.139156e-002, 5.389340e-003, 3.822908e-003, -9.153684e-003, 1.946348e-002, -1.026812e-002, -8.714121e-003, 3.825175e-002, -2.853869e-002, -1.712038e-002, -3.983026e-003, -6.342701e-003, -2.189520e-002, -3.825176e-002, -3.178107e-002, -1.331335e-002, -3.037504e-002, -5.412873e-002, 4.162375e-002, 7.717661e-002, -2.689129e-002, -4.960454e-002, -4.418892e-002, 4.897547e-004, 8.847400e-003, 2.039795e-002, 1.835867e-003, -2.463935e-002, -6.804797e-003, -9.926753e-003, -3.795650e-002, 2.571430e-002, -1.677155e-002, -1.243386e-002, -1.989238e-004, 4.240653e-003, 7.323577e-003, 2.325104e-002, 5.103438e-002, 5.287939e-002, -2.759203e-002, -7.805233e-002, 4.374157e-002, 5.057853e-003, -2.751301e-002, -2.066062e-002, -4.972197e-002, -3.821418e-002, -3.167247e-002, 1.662696e-002, 1.058292e-002, -1.038753e-002, 3.572602e-003, 2.692017e-002, -4.401230e-002, 2.552478e-004, -5.462972e-003, 2.007771e-003, 1.475481e-003, -8.924608e-004, 2.135857e-002, 5.852167e-002, 9.164271e-002, 6.629554e-002, -2.817490e-002, -6.068408e-002, -6.784241e-003, -1.378806e-002, 4.578019e-002, 5.913341e-002, 1.076811e-002, 8.307317e-003, -2.016839e-002, -1.001881e-002, 1.029484e-002, -5.700089e-003, -1.780279e-003,

© ISO/IEC 2004 — All rights reserved


Copyright International Organization for Standardization
Provided by IHS under license with ISO
No reproduction or networking permitted without license from IHS
Not for Resale

5.544215e-002, -1.992610e-002, -2.942889e-002, -1.724415e-002, 1.463018e-002, 1.796817e-002, 2.799677e-003, 3.142137e-002, 8.103962e-002, 1.050758e-001, 6.509908e-002, 2.028265e-002, 2.805349e-002, 1.494042e-002, -4.360814e-002, -1.762273e-002, 3.361518e-002, 3.933688e-002, 1.717742e-002, -8.384071e-002, -6.645431e-002, -9.727238e-003, 7.252271e-003, 5.280140e-003, 2.566102e-002, 2.356092e-002, -1.169022e-002, -2.781425e-002, 1.288892e-002, 1.957223e-002, -4.678430e-003, 1.303439e-002, 5.699010e-002, 5.326775e-002, 1.636032e-002, 3.525115e-002, 6.788902e-002, 6.693948e-002, 2.777861e-002, 3.109575e-002, 6.646061e-002, 1.079580e-001, 8.531631e-002, -1.609421e-002, -5.503225e-002, -3.171522e-002, -1.086754e-002, -1.033876e-003, -2.365576e-002, 4.214785e-002, 2.036462e-002, -2.457474e-002, 6.416461e-003, 2.676372e-002, -6.763709e-003, -1.636367e-002, -9.677937e-003, -5.158249e-002, -8.311540e-002, -4.420939e-002, -2.013339e-002, -2.358338e-002, -3.615861e-002, -2.269819e-002, 3.804281e-002, 9.827205e-002, 5.318138e-002, -5.344862e-002, -1.171117e-001, -1.150225e-001, -8.912471e-002, -7.241670e-002},
{1.105328e-001, 5.158393e-002, 5.606132e-002, 1.051039e-002, -1.734900e-002, 1.503906e-002, 4.963532e-003, -9.139678e-003, -6.925325e-003, 1.066881e-003, 1.075968e-003, 1.178122e-002, 1.270430e-002, 4.803007e-003, -1.153745e-002, -2.600648e-002, -2.909339e-002, 9.826159e-003, 4.703306e-002, 5.885750e-002, 4.391512e-002, 1.435893e-002, -9.243194e-003, -1.344226e-002, 3.195975e-002, -1.743848e-002, 5.405144e-003, -2.864660e-002, -3.385621e-002, 1.436289e-002, 1.383440e-002, -9.999775e-003, -8.550323e-003, 2.456327e-003, -6.637072e-003, -6.302752e-003, 2.315522e-002, 3.132700e-002, 6.760817e-003, -2.917032e-002, -4.930006e-002, -2.916608e-002, 1.518719e-002, 2.053554e-002, 9.838729e-003, 3.216042e-003, -2.858008e-003, 1.789448e-003, -3.014659e-002, -5.140893e-002, -2.986281e-002, -3.012782e-002, -5.580415e-003, 1.914499e-003, -2.679402e-003, 2.324487e-002, 3.569369e-002, 2.390195e-002, -2.339109e-002, -5.533305e-002, -2.588872e-002, 4.086536e-002, 6.178650e-002, 2.713489e-003, -5.100881e-002, -4.797729e-002, 9.106797e-003, -3.078578e-003, -2.779218e-002, 6.745233e-003, 5.498340e-002, 9.426323e-002, -5.436302e-002, -3.806568e-002, -1.584037e-002, 2.263174e-002, -1.617516e-002, -7.763392e-002, -6.004698e-002, 5.300641e-003, 4.062456e-002, 3.572946e-002, -2.219534e-002, -8.314153e-002, -1.067146e-001, -1.152609e-002, 9.809059e-002, 7.253076e-002, -1.062094e-002, -1.840637e-002, 5.059814e-002, 1.523665e-002, -7.979492e-002, -8.536045e-002, -4.397949e-002, 1.909632e-002, -3.594371e-002, 2.119635e-002, 2.769985e-002, 3.252224e-002, -2.586954e-002, -8.922553e-003, 1.388519e-005, -2.558557e-002, -2.970485e-002, 2.033654e-002, 4.159426e-002, 2.142869e-002, -3.729550e-002, -5.376284e-002, 4.602543e-002, 3.646420e-002, -7.311648e-002, -6.453889e-002, 5.001691e-002, 4.432490e-002, -2.490825e-002, -1.351702e-003, 7.600772e-002, 1.089987e-001, 1.005392e-003, 5.856552e-002, 2.223845e-002, 2.910624e-002, 4.889007e-002, 7.345315e-002, 2.016698e-002, -4.992816e-002, -7.651114e-002, -2.176032e-002, 2.345469e-002, 4.330037e-002, 3.697312e-002, -2.717355e-002, -2.153078e-002, -4.153185e-002, -1.431762e-001, -1.093750e-001, 2.374051e-002, 5.794144e-002, 3.218994e-002, 5.225529e-002, 8.240140e-002, 7.083277e-002, -8.971392e-003, -8.294858e-003, -5.169268e-002, 1.930146e-002, 8.230082e-003, 2.456654e-002, -9.702032e-003, -5.859161e-002, 1.132887e-002, 5.519900e-002, 1.016995e-002, -1.125197e-001, -1.173442e-001, -7.548564e-002, -4.832704e-002, -2.658810e-002, -4.264057e-003, 3.731195e-002, 3.682072e-002, -1.201748e-002, -4.955614e-002, -4.934412e-002, -3.571758e-002, 6.684169e-003, -3.922122e-002, -5.956597e-002, -8.949701e-002, -1.649124e-002, -5.615064e-002, 4.708605e-003, 5.449176e-002, 8.666032e-003, -6.075434e-003, 6.890668e-002, 7.321574e-002, -3.331543e-002, -1.210025e-001, -3.614732e-002, 4.298294e-002, 5.059256e-002, 1.553712e-001, 1.774407e-001, 3.568187e-002, -6.323963e-002, -2.578454e-002, -4.438036e-002, -3.595473e-002, 3.550144e-002, 1.621779e-002, 3.658232e-002, 2.787370e-002, 3.996596e-002, -1.389319e-002, -5.198144e-002, -3.332976e-002, 5.144195e-002, 4.841612e-003, -1.065200e-001, 3.276363e-002, 2.218777e-001, 5.138290e-002, 4.484849e-002, 9.068298e-002, -7.668314e-003, 2.041840e-002, 2.181084e-002, -5.341608e-002, -3.022538e-002, 5.123028e-002, -2.458552e-002, 1.788539e-002, 6.703052e-003, 3.784023e-002, 3.328144e-002, 1.784875e-002, 7.515603e-003, 4.042577e-002, -6.075005e-003, -5.551629e-002, -3.455002e-002, 9.614794e-003, -2.185228e-002, 3.490024e-002, 3.220139e-002, -3.779475e-002, -3.169874e-003, -8.556886e-003, -8.888336e-002, -6.669597e-002, -8.126576e-003, -5.879787e-002, -5.644848e-002, 5.398824e-003, -1.805894e-002, 1.674657e-002, 7.290249e-002, -9.436356e-005, -1.787511e-002, 1.436730e-002, -5.094248e-002, 1.562437e-002, 4.011697e-002, 3.459186e-003, -1.057770e-002, -3.077246e-002, -4.319558e-002, -4.440514e-002, -4.238851e-002, -1.820203e-002, 1.526307e-002, -4.435388e-002, -1.076361e-001, -7.366983e-002, -9.897764e-004, -2.364692e-002, -7.465240e-002, 1.509461e-002, -2.428816e-002, 2.416431e-002, 6.388212e-002, -1.082829e-002, -4.311675e-002, 4.223605e-003, -6.571633e-002, -3.457950e-002, 1.224925e-002, 1.148557e-002, 2.475100e-002, 2.644504e-002, 2.822624e-002, 1.618339e-002, 1.785856e-002, 6.623431e-002, 7.411687e-002, -3.760645e-002, -6.863159e-002, -5.378379e-002, 2.630326e-002, 1.412058e-002, -6.449881e-002, 4.564690e-002, 2.432940e-002, 3.020305e-002, 8.523964e-002, -2.660420e-002, -4.020671e-002, 7.757245e-003, -4.313194e-002, -4.400927e-002, -3.465232e-002, -3.546145e-002, -3.126205e-002, -2.579488e-002, -2.260613e-002, -1.644294e-002, 1.947503e-002, 8.189533e-002, 2.013756e-002, -2.077223e-002, -7.023940e-004, -1.615193e-002, 4.214790e-002, 3.499221e-002, -3.488567e-002, 2.974028e-002, 4.470848e-002, -4.452695e-003, 1.769140e-002, -


© ISO/IEC 2004 — All rights reserved

Copyright International Organization for Standardization
Provided by IHS under license with ISO
No reproduction or networking permitted without license from IHS
Not for Resale

4.381251e-002, -3.766040e-002, 2.588604e-002, -3.475143e-003, -1.257739e-002, -2.716182e-002, -5.353972e-002, -8.821460e-002, -9.298073e-002, -7.115601e-002, -1.908458e-002, 4.196321e-002, 1.589864e-002, -2.945963e-002, 5.620153e-002, 5.584521e-002, -6.560824e-003, 3.128003e-002, 1.827619e-002, -2.831308e-002, 1.541823e-002, 5.614912e-002, -2.979524e-002, -4.942449e-002, -3.084638e-002, -1.375250e-002, 3.114370e-002, 1.259267e-002, 5.530612e-002, 4.335104e-002, 1.123287e-002, -2.379073e-002, -3.868024e-002, -1.078992e-002, 2.193584e-002, 1.137353e-002, -5.067693e-002, 6.389375e-003, 1.138778e-001, 6.321359e-002, -3.702174e-003, -1.818305e-003, -3.455852e-002, -3.214226e-002, 2.439665e-002, 5.825951e-002, -2.850030e-003, -6.294732e-002, 1.402466e-002, 1.710070e-002, 2.649661e-002, 6.617477e-003, 4.482843e-002, 7.693312e-002, 8.672926e-002, 7.102176e-002, 6.177779e-002, 5.920331e-002, 3.057503e-002, -2.341032e-002, -3.841692e-002, -2.906919e-003, 9.410564e-003, 2.289442e-003, 9.656535e-003, -1.875089e-003, -2.671119e-002, -5.681804e-003, 9.179029e-003, 3.810064e-002, 8.256515e-004, -4.108288e-002, 3.359574e-002, 5.107547e-002, 1.905718e-002, -3.271100e-002, -5.437208e-005, 2.197974e-002, 4.292220e-002, 6.314076e-002, 6.108249e-002, 3.524129e-002, -1.142094e-002, -2.137983e-002, -2.742405e-003, -4.480010e-002, -6.468060e-002, -8.584806e-003, 1.166706e-002, 1.141983e-002, 3.782555e-002, 7.157747e-002, -5.325643e-003, -5.813137e-002, -2.590150e-002, -3.888202e-002, -1.158033e-002, 5.157052e-002, 1.224094e-002, -4.973133e-002, -3.052657e-002, -4.351678e-002, -4.565657e-002, -7.412201e-003, 2.484310e-004, -1.349227e-002, -2.077458e-002, 7.810386e-003, 2.303252e-002, -1.003177e-002, 1.931583e-002, -2.811975e-003, -3.266210e-002, -1.853861e-002, 4.285020e-003, 3.800358e-002, -3.276284e-002, -8.180784e-002, -5.206036e-002, -5.083423e-002, -3.991259e-002, 2.550913e-002, -4.845455e-003, -3.744379e-002, -5.769418e-003, -4.582693e-002, -8.590695e-002, -4.731512e-002, -2.065074e-002, -1.132153e-002, -3.993001e-003, -1.293740e-003, 2.871420e-002, 2.189928e-002, -9.867553e-004, -1.682845e-002, -5.930331e-003, -1.833301e-002, 1.348845e-002, 1.446365e-002, 3.756034e-002, 3.596125e-003, -3.987975e-002, -3.060597e-002, -5.053888e-002, 5.115027e-002, 6.480017e-003, -1.499590e-002, 4.668389e-002, 1.557333e-002, -4.231806e-002, -1.378227e-002, 3.336238e-002, 4.365577e-002, -1.089752e-002, -1.902374e-002, 2.727492e-002, 5.064108e-002, 3.644016e-002, 2.176691e-002, -2.332052e-002, -7.182411e-002, 1.756494e-002, 4.473666e-002, 3.491228e-002, 1.855437e-002, -7.179419e-003, -6.784753e-003, -9.755453e-002, 4.965220e-002, 2.103564e-002, 9.364683e-003, 9.826005e-002, 8.746485e-002, 1.055873e-002, 1.915897e-002, 8.003138e-002, 7.853472e-002, 2.017933e-002, 1.330273e-002, 2.454859e-002, 4.050328e-002, 4.001146e-002, 3.466004e-003, -5.821144e-002, -1.198729e-001, -5.195059e-002, -1.739047e-002, -2.231026e-002, -1.116320e-002, 6.319424e-004, 6.581044e-003},
{-2.854139e-002, 2.328687e-003, 1.071256e-002, 3.459247e-002, -1.808132e-002, -4.144665e-002, 1.190115e-002, 5.164768e-002, 3.506770e-002, -1.570009e-002, -6.986399e-002, -8.738887e-002, -6.441663e-002, -1.747423e-002, 5.185220e-003, -1.343550e-002, -4.111329e-002, -6.686922e-002, -5.972393e-002, -1.011108e-002, 1.301563e-002, -3.448493e-003, -4.959452e-002, -6.995684e-002, -2.688581e-002, -7.081923e-003, -1.432509e-002, 1.840723e-002, -2.303139e-002, -9.000520e-003, 7.338446e-002, 1.128529e-001, 8.376263e-002, 1.144999e-002, -5.503344e-002, -7.017320e-002, -2.676593e-002, 4.451306e-002, 9.034695e-002, 7.047794e-002, 2.596230e-002, -8.683880e-003, 3.581106e-003, 6.885189e-002, 1.156478e-001, 8.716344e-002, 1.362180e-002, -5.607742e-002, -1.989414e-002, -1.135958e-002, -4.106077e-002, 1.290302e-003, -3.407351e-002, -2.570765e-002, 3.213506e-002, 3.218795e-002, 1.461390e-002, 2.857221e-003, -3.110862e-002, -5.797783e-002, -3.650911e-002, 3.163978e-002, 9.604215e-002, 8.576521e-002, 3.785017e-002, -8.224299e-003, 1.297038e-002, 7.450660e-002, 9.899800e-002, 3.325367e-002, -7.021337e-002, -1.335293e-001, -5.719759e-003, -4.106663e-003, -4.206419e-002, -6.197158e-003, -2.766608e-002, -2.830300e-002, -1.550872e-002, -1.436608e-002, 3.900738e-002, 8.795239e-002, 7.814876e-002, 2.088386e-002, -3.432793e-002, -2.642069e-002, 2.101667e-002, 2.124970e-002, -3.819151e-002, -8.624835e-002, -5.052882e-002, 2.683729e-002, 1.875702e-002, -1.198749e-002, -1.981042e-004, 2.925203e-002, 1.960569e-002, -6.339702e-003, -3.188574e-002, 1.214926e-002, 9.589717e-003, -7.037595e-004, -3.618984e-002, -2.248088e-002, 4.742486e-002, 6.404717e-002, 2.102855e-002, -5.250808e-002, -1.109146e-001, -7.847907e-002, 1.903554e-002, 5.235825e-002, 5.223375e-003, -4.122615e-002, -5.195660e-003, 6.196094e-002, 3.197629e-003, -2.655911e-002, 2.220116e-005, 5.582478e-002, 2.850073e-002, -9.635188e-003, -1.599113e-002, 7.804268e-003, -3.826629e-003, -1.597786e-002, -5.384237e-002, -4.091522e-002, 2.008062e-002, 6.442087e-002, 6.511178e-002, 2.273043e-002, -3.772906e-002, -5.451838e-002, 2.894272e-002, 7.114517e-002, 1.581487e-002, -3.858688e-002, 7.416507e-003, 6.827787e-002, -4.171583e-002, -7.950084e-002, 2.171679e-002, 1.204511e-001, -1.112871e-002, -1.418316e-002, 1.685062e-002, -3.578607e-002, -2.258609e-002, 3.548912e-002, -7.179800e-003, -6.817567e-002, -5.301795e-002, -1.839876e-002, -9.022910e-003, -2.607864e-002, 1.421508e-003, 1.221176e-002, -1.027375e-002, -7.408527e-002, -1.199523e-001, -1.607391e-001, -9.756696e-002, -4.605660e-002, -9.251728e-002, -2.652349e-002, 9.882733e-002, 1.046300e-001, -3.808840e-002, -1.687388e-002, 4.835696e-002, -3.543072e-002, -1.613640e-002, 2.757862e-002, 2.157370e-002, 1.897056e-002, -5.222427e-002, 1.866976e-002, 3.805398e-002, -7.734367e-003, -5.851931e-002, 1.257720e-002, -1.115897e-002, -1.272942e-001, -7.361164e-003, 4.285552e-002, 2.946586e-002, 6.725884e-003, -4.860315e-002, -4.262728e-002, 3.130631e-002, -1.359233e-001,

© ISO/IEC 2004 — All rights reserved


Copyright International Organization for Standardization
Provided by IHS under license with ISO
No reproduction or networking permitted without license from IHS
Not for Resale

2.700653e-003, 7.148672e-002, 5.766979e-002, -5.937759e-003, -4.852556e-002, -5.475217e-002, -5.202021e-003, 1.049491e-001, -7.281467e-002, -8.962447e-002, 4.451407e-002, 9.592316e-002, -7.287240e-002, -1.828856e-002, 2.875013e-002, -5.333837e-002, 4.449302e-002, 7.245715e-002, 1.638661e-002, 6.476789e-002, -1.709893e-002, -6.782816e-002, 1.506254e-001, 7.209264e-002, 2.469262e-002, 4.580146e-002, -3.618340e-003, 1.261893e-002, -2.291960e-003, 1.953066e-002, 1.203619e-002, 1.026335e-002, -2.655005e-002, -5.059685e-002, -8.180263e-003, -9.462025e-003, -3.508309e-002, 1.526830e-002, 1.030958e-001, 5.240815e-002, 4.750428e-002, 5.933040e-002, 1.468632e-002, 3.275142e-002, -7.172749e-003, -4.794120e-002, 1.995122e-002, 7.067543e-002, 7.851584e-003, -7.172670e-003, -4.621731e-002, 2.570323e-002, 6.844657e-003, 1.776869e-002, 4.286197e-002, 6.168084e-002, 5.891746e-002, 6.661838e-002, 5.877488e-002, 2.253649e-002, -4.220603e-002, -1.174953e-002, 1.093702e-001, 5.665376e-002, 9.666372e-003, 2.163869e-002, 8.802902e-003, -2.038296e-002, -7.582123e-003, -4.798167e-002, -9.443916e-004, 5.341698e-002, 2.014426e-002, -2.779135e-002, -4.554064e-002, 3.824663e-002, -8.158458e-003, -3.453919e-002, 1.237525e-002, 5.254813e-002, 6.482136e-002, 6.820046e-002, 3.035356e-002, -4.737267e-002, -1.080820e-001, -2.776312e-002, 6.593066e-002, -9.645818e-003, -3.373407e-002, -1.588598e-002, -1.168372e-002, -3.854309e-002, 1.013530e-003, -5.705676e-002, -2.071127e-002, 3.703111e-002, 3.109964e-004, -6.970842e-003, -2.301038e-002, 4.631015e-002, -1.801741e-002, -5.772557e-002, -3.954954e-002, -2.807676e-002, -3.619470e-002, -5.013980e-002, -8.232338e-002, -1.158467e-001, -9.687969e-002, 9.599173e-003, 1.522099e-002, -4.695570e-002, -4.712996e-002, -3.296614e-002, -1.532460e-002, -2.289407e-002, -5.078675e-003, 3.143298e-002, -2.273989e-002, -1.756300e-002, -2.793932e-002, -5.612349e-003, 1.518170e-002, 4.903591e-002, -1.548176e-002, -3.096246e-002, -2.182320e-004, -1.818794e-002, -3.800843e-002, -4.147288e-002, -3.853311e-002, -1.890201e-002, 1.963142e-002, 1.989879e-002, -1.226825e-002, -2.976098e-002, -2.451719e-002, -6.657560e-003, 1.014936e-002, 1.603706e-002, -3.779695e-002, 5.173956e-002, 1.033691e-001, 3.450714e-002, -3.404639e-002, 4.706658e-003, 3.424624e-002, 5.004564e-002, -2.296229e-002, -2.824093e-002, 4.025250e-002, 7.454861e-002, 8.862041e-002, 9.811427e-002, 8.220334e-002, 4.617793e-002, 2.648080e-002, 1.844734e-002, 2.804977e-002, 2.154545e-002, -8.029422e-003, -3.746777e-003, 1.226645e-002, 3.665560e-002, 1.024594e-002, -4.039927e-002, 5.006279e-002, 1.100484e-001, 2.039436e-002, 4.532793e-003, 3.819179e-002, 4.235716e-002, -2.329327e-002, -5.348865e-002, -1.424510e-002, 1.552405e-002, 1.608881e-002, 8.702969e-003, -2.491395e-002, -2.397001e-002, 2.257286e-002, 1.898105e-002, 4.415333e-002, 1.123290e-003, -3.554330e-002, -1.596579e-002, -1.567601e-003, -9.200880e-003, 1.122632e-002, -2.347668e-002, -6.218931e-002, -1.815860e-002, 9.522971e-002, 2.150825e-002, 2.885310e-002, 3.078021e-002, -5.755586e-003, -2.606906e-002, -2.346476e-002, -2.271101e-002, -3.723310e-002, -5.912715e-002, -5.985177e-002, 1.841679e-003, 1.830366e-002, -1.011852e-003, -9.850142e-003, -3.573681e-002, -2.578589e-002, 1.498879e-003, 3.651925e-002, 1.244163e-002, -1.517424e-002, 3.166504e-002, -1.995942e-002, -7.694862e-002, 1.089956e-001, 1.684323e-002, 1.355206e-002, 7.398314e-003, 3.022695e-003, 1.299138e-003, 1.489124e-002, 1.209117e-002, -7.181249e-003, -3.701588e-002, -1.999603e-002, 2.317853e-002, 1.056613e-002, -1.717580e-002, -3.799678e-002, -2.356990e-002, -7.698216e-003, -2.412463e-002, 1.824997e-003, 3.208303e-002, -1.324123e-002, 4.367689e-002, 3.276894e-002, -4.393035e-002, 3.122053e-002, -3.525505e-002, -5.173424e-003, -2.380984e-002, 7.674229e-004, 2.101399e-002, 3.833882e-002, 3.931036e-002, 8.314504e-003, -2.491695e-002, -1.194222e-002, 6.053046e-003, 1.380478e-002, 5.403389e-003, 2.263402e-003, 4.790269e-003, 4.238791e-002, 2.874697e-002, 1.245095e-002, -1.861763e-002, -4.386680e-002, 2.076304e-002, 2.776850e-002, -8.635150e-003, -4.548594e-002, -6.459558e-002, 1.120755e-002, -3.296451e-002, -2.393407e-002, 1.513265e-002, 3.928558e-002, 3.859000e-002, -3.508142e-003, -2.669493e-002, -2.407953e-002, -1.138618e-002, -3.632829e-003, -2.099065e-002, -2.783592e-002, 3.277308e-002, 8.648471e-002, 7.645219e-002, 2.761094e-004, -5.073094e-002, -2.389134e-002, 2.334800e-002, 4.562585e-003, -1.946219e-002, -2.602843e-002, -4.952533e-002, 2.032798e-002, -3.286430e-002, -3.712882e-002, 1.074342e-004, 3.069612e-002, 2.628570e-002, -1.308940e-002, -3.158363e-002, -2.602109e-002, -2.299236e-002, -3.411136e-002, -4.160761e-002, -2.505569e-002, 1.275524e-002, 3.275547e-002, 1.949084e-002, -5.041323e-002, -5.809975e-002, -5.228031e-003, 2.100100e-002, 4.059969e-004, -1.412396e-002},
{8.647394e-002, 1.038767e-002, -8.271071e-003, -5.549273e-003, 1.072633e-003, 1.636359e-003, 1.208494e-002, 3.219142e-002, 3.646430e-002, 2.448085e-002, 1.789986e-002, 4.415415e-002, 8.107905e-002, 8.517559e-002, 3.573602e-002, -4.493782e-002, -9.664670e-002, -9.290033e-002, -4.650430e-002, 2.852994e-002, 6.766473e-002, 4.459463e-002, -2.337026e-002, -6.162138e-002, 2.701334e-002, -2.957712e-002, -3.732025e-002, -2.013135e-002, -1.100554e-002, -2.994012e-002, -2.414728e-002, -1.952654e-003, -7.248039e-003, -3.743597e-002, -8.428653e-002, -9.017333e-002, -1.864830e-002, 4.953622e-002, 5.545412e-002, -9.478536e-003, -6.436832e-002, -7.427486e-002, -1.982916e-002, 4.867585e-002, 8.102128e-002, 3.602240e-002, -3.800281e-002, -6.706374e-002, -1.757155e-002, -5.196581e-002, -3.268678e-002, -1.068867e-002, 2.220354e-003, -2.721849e-002, 1.053731e-003, 6.698773e-002, 9.797973e-002, 8.095033e-002, 1.873611e-002, -6.360593e-002, -7.654398e-002, -1.265233e-002, 5.501867e-002, 3.581645e-002, 1.502401e-003, -1.886039e-002, 2.408831e-002, 2.875564e-002, 7.188881e-003, -8.654877e-003, 4.105906e-002, 1.318288e-001, -


© ISO/IEC 2004 — All rights reserved

Copyright International Organization for Standardization
Provided by IHS under license with ISO
No reproduction or networking permitted without license from IHS
Not for Resale

3.679069e-002, -2.528122e-002, -1.701107e-002, 2.508830e-002, 3.275630e-002, -2.110065e-002, -3.014065e-002, 7.651013e-003, 2.884409e-002, 2.648962e-002, -6.579132e-003, -4.624873e-002, -8.909512e-002, -6.007809e-002, 1.243322e-002, 3.112307e-002, 2.005726e-002, 1.834977e-002, 2.861503e-002, -4.768552e-002, -1.533133e-001, -1.191943e-001, 4.329601e-002, 2.010672e-001, -1.151034e-002, 3.122864e-002, -6.940274e-003, 2.609651e-002, -1.729930e-003, -4.304506e-002, -4.384336e-002, 1.666896e-002, 2.212129e-002, -9.045232e-003, -3.017402e-002, -1.718505e-002, -1.604625e-002, -1.724539e-003, 1.664898e-002, 2.401280e-003, -8.145130e-003, 2.871098e-002, 3.959854e-002, -2.677193e-002, -9.390062e-002, -4.722898e-002, 1.039258e-002, 4.071764e-002, 2.185117e-002, 4.726659e-002, -1.133047e-002, -1.586984e-003, -2.722048e-002, -6.251613e-002, -7.645785e-002, -1.696002e-002, -1.671161e-002, -4.725233e-002, -6.756490e-002, -2.871128e-002, 4.238930e-002, 9.803906e-002, 6.958899e-002, -4.892312e-002, -8.322375e-002, -3.765201e-002, 6.943369e-003, 4.349378e-002, 4.312938e-002, -1.538023e-002, -6.670365e-002, -6.780960e-002, 2.773235e-002, 4.080769e-002, 2.924412e-002, 7.292908e-003, -7.203771e-003, 1.678251e-002, -2.376786e-002, 5.712314e-003, 3.383630e-002, -5.701875e-003, -2.589075e-002, 8.554304e-003, 3.733169e-002, 1.001386e-001, 1.401719e-001, -2.377705e-002, -7.239255e-002, -4.345905e-002, -2.561813e-002, 6.452018e-002, 7.611460e-002, -2.971765e-002, -2.408121e-002, 3.037305e-002, -1.166890e-002, -6.114795e-003, 2.930046e-002, 1.866639e-002, 2.082275e-002, 8.222301e-002, -1.955006e-002, 2.823826e-002, 2.364596e-002, -4.362784e-002, -2.047044e-002, 4.780633e-002, -5.174421e-003, 4.476606e-002, 8.177903e-002, 8.293626e-003, 2.067402e-002, 4.651815e-002, -1.152697e-002, 9.556602e-002, 1.027667e-001, 1.246896e-002, -2.366940e-003, 3.431144e-002, -1.891880e-002, -5.174427e-002, -5.765717e-003, -2.456430e-002, -3.622290e-002, 3.336383e-002, 3.009417e-002, 8.687539e-002, 5.389899e-002, 2.009539e-002, 4.916039e-002, -2.188079e-002, -8.692854e-002, -2.946644e-002, -1.741958e-002, 1.042111e-003, -1.637851e-002, -2.083448e-002, -5.432070e-002, 8.529941e-002, 4.226729e-002, -3.044213e-002, -5.811058e-002, -6.543782e-002, 1.267314e-002, -3.754308e-002, 5.867700e-003, -2.459273e-002, -5.118795e-002, 1.164075e-002, -2.048241e-002, -6.475149e-002, -6.187923e-002, -1.326539e-002, 1.307066e-002, -4.199615e-002, -7.687508e-002, -6.849280e-002, 1.522650e-002, 5.421924e-002, 2.422663e-002, 5.017584e-003, -3.435096e-002, 4.361410e-002, 1.434969e-002, -4.229475e-002, 8.662616e-003, 5.344808e-002, 2.383106e-002, -6.491932e-003, 2.544942e-002, 2.295511e-002, 1.774514e-003, 2.820751e-002, -3.739321e-002, -9.742230e-002, -7.181073e-002, -8.423864e-003, 2.247260e-002, 2.925798e-002, 1.206150e-002, -1.350520e-002, 4.756233e-002, 3.957401e-002, 4.276425e-002, 3.953222e-002, -1.680305e-002, 1.110885e-002, 1.497705e-003, -3.509263e-002, 5.273891e-002, 1.296864e-001, -7.319725e-003, -1.330135e-002, 5.810896e-003, 1.792486e-002, 5.865527e-002, 6.344042e-002, -1.472110e-002, -7.078124e-002, -5.152551e-002, -9.021458e-003, 1.091057e-002, 1.887856e-002, 1.411975e-002, -2.292093e-002, -1.009357e-002, 2.697939e-004, 3.636319e-002, 4.040888e-002, -1.286891e-002, -1.788897e-002, -1.355831e-002, -7.866983e-002, 1.064081e-002, 8.102488e-002, -2.520496e-002, -6.086355e-004, 3.100414e-003, -2.451764e-002, 6.191538e-002, 7.942552e-002, 5.785324e-003, -6.309030e-002, -6.639257e-002, -4.086357e-002, -2.308342e-002, -2.305508e-003, -1.006672e-002, -4.863766e-002, -5.326262e-002, 6.717230e-003, 3.842754e-002, 2.655325e-002, -7.897118e-003, -4.183813e-002, -1.530736e-004, -6.859683e-002, -5.209230e-002, 1.510757e-002, -1.649866e-002, 1.080039e-002, 1.064784e-002, -2.306172e-002, 9.724047e-003, 4.357536e-002, 7.157540e-003, -3.434417e-002, -3.372896e-002, -1.222473e-002, 7.045129e-003, 1.894014e-002, -1.541176e-002, -7.842505e-002, -3.371802e-002, 1.836785e-002, 1.002312e-002, 1.311278e-002, 9.089095e-003, -3.538998e-002, -4.514296e-002, 8.572831e-003, 2.398951e-002, 1.732593e-002, 1.417515e-002, 6.620394e-003, 2.854735e-002, -1.153589e-004, -9.117087e-003, -1.389422e-002, -2.185181e-002, -2.747859e-002, -6.452568e-003, 2.441714e-002, 4.616828e-002, 4.773377e-002, -1.710507e-002, -5.213033e-002, 1.102226e-002, -3.440317e-003, -4.526327e-002, -6.716071e-003, 3.616387e-003, -5.223662e-003, -3.356160e-002, -4.847996e-002, 6.623197e-002, 1.100077e-001, 3.943086e-002, 9.665122e-003, 3.362591e-002, 2.000666e-002, 8.078936e-003, -1.529618e-002, -2.062594e-002, -1.377973e-002, 1.170585e-002, 3.453252e-002, 3.556796e-002, 5.652397e-003, -4.291843e-002, 3.065300e-002, 7.218322e-002, -1.327833e-002, -5.800061e-002, 4.221773e-003, -2.144457e-002, 1.126628e-002, 1.118741e-001, -2.272973e-003, -5.135831e-002, 3.410343e-002, 4.302055e-002, 1.306312e-002, 3.625726e-002, 2.891718e-002, 1.000908e-002, -1.548515e-002, -1.250586e-002, 3.234525e-003, 2.787045e-002, 3.697912e-002, 4.947017e-003, -3.441700e-002, -7.064452e-002, 1.923750e-002, 5.319869e-002, -9.046220e-003, -3.311754e-002, 2.614058e-002, -3.636211e-002, -3.435856e-002, 1.119106e-001, 8.468519e-002, -1.020096e-001, -8.958932e-002, 4.175709e-002, 7.908041e-003, 8.334692e-003, 2.280971e-002, 1.656127e-002, -2.416208e-003, 4.579207e-003, 3.203881e-002, 4.355112e-002, 3.513525e-002, 9.502243e-003, -2.210702e-002, -7.990603e-002, -4.931036e-002, 8.922324e-002, 2.001796e-002, -5.332562e-002, 2.180623e-002, 3.703810e-002, -2.548864e-002, -6.781347e-002, 1.020520e-002, -6.879334e-002, -1.108461e-001, 3.295107e-002, 1.704448e-003, -1.806154e-002, -8.709093e-003, 7.540541e-003, -1.205639e-002, -7.259936e-003, 4.546555e-002, 6.365093e-002, 5.132557e-002, 3.215156e-002, 3.633301e-002, 3.233892e-002, -3.631890e-002, -2.117794e-002, 5.837862e-003, 2.848171e-002, 5.093070e-002, -1.196387e-002, -6.334534e-002, -3.465387e-002, 3.500288e-002, 1.594756e-002, -4.381509e-002, -

© ISO/IEC 2004 — All rights reserved


Copyright International Organization for Standardization
Provided by IHS under license with ISO
No reproduction or networking permitted without license from IHS
Not for Resale

1.523444e-002, -2.387708e-002, -3.257863e-002, -4.328923e-002, -4.868376e-003, -1.808341e-002, -2.856261e-002, 2.677088e-002, 4.917145e-002, 2.010560e-002, 4.518429e-004, 5.304613e-002, 1.067041e-001, 7.913383e-002, 8.941113e-003, -6.829222e-002, -2.239851e-002, 5.513447e-002, 3.946006e-002, 2.145794e-004, 1.056363e-002, 4.235426e-002, 3.171157e-002, 7.613449e-003, -3.359907e-002, -4.232822e-002, -3.838512e-002, -7.027114e-002, -2.818173e-002, -2.169721e-002, -3.074382e-002, -3.604825e-003, 6.601911e-003, -5.717762e-002, -7.480428e-002, -1.501285e-002, 4.389811e-002, 5.706430e-002, 2.034304e-002, -8.080844e-002, -9.102365e-002, -2.547956e-002, 5.582546e-003, 2.958633e-002, 5.107348e-003, -3.841643e-002, -6.066945e-002, -3.640561e-002},
{3.004971e-002, 4.007681e-002, -1.205721e-002, -2.737580e-002, -3.030931e-002, -1.153149e-002, -5.190028e-003, -2.946854e-002, -6.567600e-002, -7.174112e-002, -6.612018e-002, -3.968250e-002, -6.128153e-003, 2.352697e-002, 3.288629e-002, 3.372775e-002, 1.126299e-002, 4.267108e-003, 1.970895e-002, 2.379183e-002, 6.309554e-003, 7.617311e-004, 1.078858e-002, 1.662433e-002, -5.518041e-003, 1.264831e-002, -1.021082e-002, -1.549932e-002, 6.079306e-003, 4.641372e-002, 6.365976e-002, 6.041665e-002, 4.584724e-002, 3.845761e-002, 1.116840e-002, -1.465040e-002, -1.106433e-002, 1.179781e-002, 3.259006e-002, 3.952083e-002, 1.462742e-002, 6.102354e-003, 1.103581e-002, 1.293124e-002, -2.589459e-002, -5.095793e-002, -2.445198e-002, 1.525995e-002, -3.663566e-002, -8.689415e-003, -1.016210e-002, 1.156957e-002, 4.611755e-003, -1.207313e-003, 3.263004e-002, 6.523888e-002, 6.366364e-002, 4.229713e-002, -1.358417e-002, -7.801682e-002, -9.641392e-002, -6.412755e-002, 3.652483e-003, 3.796715e-002, 9.487147e-003, 9.566956e-003, 2.224834e-002, 3.912567e-003, -5.085275e-002, -6.380012e-002, -9.013217e-003, 7.914372e-002, -3.418485e-002, -1.625250e-002, 1.888952e-002, 2.129271e-002, -3.888314e-002, -4.588314e-002, 1.145553e-002, 2.651082e-002, 2.074957e-002, 2.215789e-002, 1.677540e-002, -2.936349e-002, -8.203338e-002, -7.594851e-002, 5.806542e-003, 5.110617e-002, -1.070826e-003, -1.361929e-002, 2.323101e-002, 2.517736e-002, -2.500559e-002, -5.480690e-002, -3.113607e-002, 8.247468e-003, -3.482589e-003, -1.169851e-002, 3.656038e-002, -8.689472e-005, -2.902110e-002, -2.343080e-002, -2.448706e-002, -4.317253e-002, -5.045966e-002, -1.453754e-002, 3.183930e-002, 4.454237e-002, 2.851166e-002, 3.628468e-002, 8.207401e-002, 5.873334e-002, -7.688746e-002, -1.082829e-001, -2.356463e-002, 4.447119e-002, 5.473564e-002, 5.389622e-002, 1.798572e-002, -7.342276e-002, 3.036935e-002, -5.361138e-004, -1.793291e-003, -2.563198e-002, 7.160964e-003, -5.252526e-002, -8.626087e-002, -8.281941e-002, -4.070470e-002, -2.087959e-003, 4.381976e-003, 1.264399e-002, 1.459458e-002, 2.498617e-002, 9.069808e-002, 6.965697e-002, -9.926675e-002, -1.355178e-001, -2.987817e-002, 6.200847e-002, 1.277936e-001, 1.283974e-001, 4.812204e-002, -7.806254e-002, 8.125405e-003, -2.414733e-002, -5.620318e-002, -4.014352e-003, 4.387662e-002, -1.040019e-002, 5.226775e-003, 1.982851e-002, 5.553867e-002, 5.942319e-002, -1.703922e-002, -4.605526e-002, -1.196452e-002, -4.123368e-002, -4.647384e-003, 5.554991e-002, 4.078801e-002, 6.088488e-002, 9.315922e-002, 2.364954e-002, -1.312583e-003, 3.045027e-002, -3.601876e-002, -9.495171e-002, -7.594369e-003, -1.797327e-002, -1.782344e-002, 9.513919e-003, 5.578424e-002, 2.128801e-002, 8.745704e-003, -9.306546e-002, 1.984219e-003, 1.176813e-001, -1.811194e-002, -8.303370e-002, 1.919376e-002, 1.081216e-002, 4.267811e-003, -5.824280e-002, -1.048104e-002, 5.725042e-002, 6.582916e-002, -9.384650e-002, -1.121984e-001, -1.274368e-002, -1.108302e-002, -1.482885e-002, 1.211236e-002, 1.687677e-002, 2.745581e-002, 4.871419e-003, 2.390228e-003, 9.324718e-003, 6.314168e-002, 3.739595e-002, -1.075555e-001, -1.732927e-002, 2.655495e-002, 5.982763e-002, 1.458092e-002, 7.369984e-002, 8.958331e-002, -9.129263e-002, -5.611792e-002, 1.745225e-002, 3.856897e-002, -3.617536e-002, -2.827293e-002, 4.965187e-002, 7.617216e-002, -1.280724e-001, 2.215466e-002, 2.039842e-002, 3.555146e-002, 1.587540e-002, 1.786040e-002, 4.861631e-002, 1.139192e-001, 6.753078e-002, -6.271289e-002, -1.058413e-001, -3.885902e-002, -5.797626e-003, -1.934237e-002, 8.058668e-003, 3.469096e-002, -6.692683e-002, -2.125943e-002, -2.221890e-002, -6.973410e-003, -2.771602e-002, 1.280122e-002, 2.885726e-002, 4.831713e-002, -3.102117e-002, 1.370418e-002, 1.267667e-002, 3.215021e-002, 1.899701e-002, 4.733805e-003, 1.262653e-002, 7.067313e-002, 9.543450e-002, 5.974402e-002, 2.628443e-002, -1.859481e-002, -6.641164e-002, -9.953505e-002, -1.947692e-002, -2.685077e-002, -2.953122e-003, 1.303555e-002, -1.348322e-002, -2.048134e-002, -3.833985e-002, 1.455440e-002, -2.170616e-002, -7.965956e-003, 8.365956e-003, 9.760117e-003, 4.908251e-003, 1.382592e-002, 1.428869e-002, -2.145065e-002, -4.000540e-002, -3.737769e-003, 2.923313e-002, 1.692655e-002, -8.351615e-003, -3.958809e-002, -5.851151e-002, -3.679132e-002, 3.174274e-002, -1.728348e-002, 4.390254e-002, 3.286354e-002, 1.222361e-002, -3.503454e-003, -2.958413e-002, 5.198623e-002, 2.057997e-002, -3.238895e-002, -1.471263e-002, -2.422278e-003, 9.084304e-003, -2.166928e-002, 1.032699e-002, -2.939326e-002, -5.109531e-002, -1.218321e-002, 2.932211e-002, 2.506232e-002, 1.267175e-002, 6.895175e-003, 2.654864e-002, 5.424882e-002, 6.912277e-003, -3.587808e-003, 4.184440e-002, 3.800533e-002, 2.338344e-002, 1.538072e-002, -2.031824e-002, 1.045433e-002, 5.006377e-002, 1.837663e-003, -2.304638e-002, -1.062138e-002, -9.588415e-003, -2.688115e-002, 7.906923e-003, -8.222609e-003, -4.135063e-002, -6.716919e-003, 4.356993e-002, 5.830640e-002, 7.058534e-002, 7.417397e-002, 6.549627e-002, -2.664555e-002, -6.760503e-002, 7.403053e-003, 2.399945e-002, 1.593564e-002, -4.773585e-004, 2.423079e-002, -5.002397e-003, -3.152562e-002, -2.030640e-002, -3.593936e-003, 1.841719e-003,


© ISO/IEC 2004 — All rights reserved

Copyright International Organization for Standardization
Provided by IHS under license with ISO
No reproduction or networking permitted without license from IHS
Not for Resale

7.850077e-004, -1.534907e-002, -2.042476e-002, -3.383306e-003, 2.078397e-002, -2.514591e-002, -3.196828e-002, -5.577765e-003, 8.365990e-003, 1.244721e-002, -1.330432e-002, -7.871851e-002, -1.142798e-001, -2.094566e-002, 2.136031e-002, -1.389398e-002, -3.936610e-002, -3.695388e-002, 1.650422e-002, 6.453216e-003, -2.749077e-002, -6.094802e-002, -8.486119e-002, -5.772597e-002, 2.209610e-002, 6.193192e-003, 9.659613e-003, 2.063846e-002, 3.020876e-002, 2.993733e-003, -3.042944e-002, -2.208829e-002, -3.053565e-002, -3.289068e-002, -3.257403e-002, -2.770886e-002, -2.539393e-002, 1.670016e-002, -7.622109e-003, -5.242509e-002, -5.706055e-002, -3.353980e-002, 1.169312e-002, 2.560026e-003, -7.852159e-004, -1.977602e-002, -9.059692e-003, -2.523298e-002, 2.235120e-002, 1.997976e-002, 3.226540e-002, 3.375736e-002, 4.652225e-002, 4.097335e-002, 9.365768e-003, 1.928737e-002, 3.383399e-002, 5.503010e-002, 6.713939e-002, 4.641082e-002, 1.310687e-002, 4.519822e-002, -9.157207e-003, -3.533382e-002, -2.212394e-002, -1.460556e-002, -2.221193e-002, -3.389784e-002, 7.281238e-002, 8.017965e-003, 6.374990e-002, 1.139466e-001, 1.116735e-002, -7.886781e-003, 2.695225e-002, 2.436272e-002, 2.048562e-002, 2.815986e-002, 5.535460e-003, 2.711745e-002, 6.964849e-002, 8.633756e-002, 5.520206e-002, -5.662292e-003, -2.368105e-003, 4.625455e-002, 1.736892e-002, -1.569816e-002, -6.765026e-002, -4.269950e-002, -9.464302e-003, 1.568753e-003, 1.282565e-001, -5.361229e-003, -1.711131e-002, 1.212469e-001, -2.637912e-002, -3.563143e-002, 3.871894e-003, 6.883408e-003, -2.230773e-002, -4.064129e-003, -2.271243e-002, -1.619244e-002, 2.860832e-002, 4.035375e-002, -5.119140e-003, -7.131520e-002, -8.806726e-002, -8.422536e-002, -2.356474e-002, 3.986443e-002, -2.078747e-002, 1.072488e-002, 7.641285e-002, 9.195861e-003, -8.741648e-003, -9.721250e-002, -1.055880e-001, 2.315244e-002, -1.395513e-002, -1.567344e-002, 8.230897e-004, -1.235650e-002, -5.495189e-002, -2.897757e-002, -4.202765e-002, -5.014219e-002, -1.073678e-002, 1.818037e-002, -2.083069e-003, -3.148137e-002, -9.002738e-002, -1.427710e-001, -5.138931e-002, 7.225916e-002, 3.034592e-002, 6.147981e-003, 2.109750e-002, -7.921020e-002, -1.056217e-001, -8.819033e-002, -4.857240e-002, 5.218319e-003, -8.497538e-003, -7.954270e-003, -2.374546e-002, -1.932974e-002, -5.561744e-002, -4.242391e-002, -5.085950e-002, -6.820217e-002, -1.788872e-002, 4.550183e-002, 7.948876e-002, 7.628011e-002, 9.764809e-003, -4.767378e-002, 1.104947e-002, 9.876632e-002, 6.440361e-002, 1.158394e-002, 3.494131e-002, -1.824262e-002, -1.606974e-002, 4.435166e-002, 9.589385e-002, 9.854418e-002},
{1.298061e-001, 7.881073e-002, 1.015258e-001, 8.633063e-002, 6.934306e-002, 3.256102e-002, 1.185444e-002, 1.657613e-002, 2.955940e-002, 3.380216e-002, 2.293102e-002, -1.316805e-002, -4.830706e-002, -3.891587e-002, -4.611942e-003, 4.474454e-002, 9.584686e-002, 1.064433e-001, 6.942804e-002, -1.544093e-002, -7.330882e-002, -6.468313e-002, -1.980802e-002, 9.180379e-003, 3.208778e-002, -2.607746e-002, 2.307418e-002, -8.717965e-004, -1.968233e-002, -4.670040e-002, -6.147647e-002, -5.356113e-002, -1.000317e-002, 4.878470e-002, 8.831665e-002, 6.810673e-002, -4.379723e-003, -5.830997e-002, -7.220679e-002, -3.191617e-002, 3.335607e-002, 6.193329e-002, 2.984531e-002, -4.665527e-002, -8.664205e-002, -5.315813e-002, 4.398070e-002, 1.010704e-001, -5.118387e-002, -8.179216e-002, -4.449602e-002, -5.549222e-002, -3.292888e-002, -4.798124e-002, -8.305605e-002, -8.822653e-002, -6.054254e-002, -2.085472e-002, 2.662808e-002, 5.230964e-002, 2.186680e-002, -3.061124e-002, -8.591581e-002, -8.401126e-002, -3.149548e-002, 9.343501e-003, -8.810720e-003, -4.764305e-002, -4.265359e-002, 4.721305e-003, 5.990278e-002, 6.838369e-002, -6.806187e-002, -4.766639e-002, -2.184357e-002, -1.042914e-002, 1.224800e-002, -1.194338e-002, -1.658480e-002, 2.123396e-002, 4.366129e-002, 2.863331e-002, -6.777189e-003, -2.357174e-002, -5.568632e-003, 9.445078e-003, -1.202361e-002, -1.920314e-002, 3.627632e-003, 2.712422e-002, 4.978693e-003, -1.824788e-002, 2.032736e-002, 2.125730e-002, -1.688725e-002, -6.609616e-002, -1.627468e-002, 4.162313e-002, 2.094186e-002, 2.207778e-002, 1.972040e-002, -4.682811e-002, -1.576448e-002, 3.149485e-002, 2.675455e-002, 8.038221e-003, -1.520886e-002, -2.671680e-002, -8.156791e-003, 3.235469e-002, 5.380291e-002, 5.064576e-002, 5.806782e-002, 4.107817e-002, -7.923036e-003, -1.980047e-002, 5.316317e-002, 5.992430e-002, -6.224097e-003, -9.213746e-002, 2.983783e-002, 5.611823e-002, -3.182120e-002, -6.016108e-003, 2.962238e-002, 3.213674e-002, 7.096975e-002, 5.071819e-002, 2.163920e-002, 1.520349e-002, 5.783095e-003, 1.304069e-003, 3.180700e-002, 5.706770e-002, 3.706553e-002, -4.262313e-003, -3.999289e-003, -5.578717e-002, -8.865447e-002, -3.058596e-002, 9.570077e-002, 7.891256e-002, -6.085642e-002, -1.738338e-001, -1.487886e-002, -4.732778e-002, -8.910520e-002, 1.640009e-004, 5.065000e-002, 1.039582e-002, -6.003524e-002, -1.134482e-001, -4.486219e-002, 4.529510e-002, 4.517473e-002, -4.008854e-003, -6.730930e-004, 5.542650e-002, 5.816942e-002, -3.908870e-002, -3.699817e-002, -5.621465e-002, -4.079358e-002, 9.315910e-003, 1.169284e-001, 8.586070e-002, -2.428946e-002, -9.620977e-002, -2.183267e-002, -5.381151e-002, -2.296231e-002, -1.410996e-002, -2.868546e-002, -4.018738e-002, -2.863561e-002, 1.941269e-002, 4.620995e-002, 2.750400e-002, -3.620745e-003, -2.748885e-002, -6.736722e-002, -2.612549e-002, 7.980674e-002, 1.065583e-002, 1.470256e-002, 1.655645e-002, 5.673699e-002, 3.344823e-002, 3.654022e-002, 7.495184e-002, 3.755169e-002, -2.570269e-002, 3.987641e-002, 3.303765e-002, 8.765969e-002, -6.006663e-003, -4.400747e-002, -2.063905e-002, -1.417127e-002, -1.978126e-002, 5.860827e-003, -5.468762e-002, -2.605424e-002, 1.261925e-001, 1.898286e-002, -9.485192e-002, 3.468997e-002, -2.336199e-002, -2.144846e-002, -2.088645e-002, 1.648233e-002, -1.189814e-002, -1.002817e-001, 4.018143e-002, 4.021019e-003, -1.055647e-002,

© ISO/IEC 2004 — All rights reserved


Copyright International Organization for Standardization
Provided by IHS under license with ISO
No reproduction or networking permitted without license from IHS
Not for Resale

2.782791e-002, -1.126013e-002, 4.235182e-002, -5.250173e-002, -3.435056e-002, -1.033362e-002, -7.496973e-003, -4.227606e-002, -7.665351e-002, -1.058317e-001, -2.389491e-002, 7.208671e-002, -2.215352e-003, -8.460576e-002, 2.182659e-002, -1.587276e-002, 8.388747e-003, -1.755419e-002, 4.895388e-002, 5.291021e-002, -1.100352e-001, 4.275322e-002, 7.636064e-002, 2.729468e-002, 1.591587e-002, -2.521408e-002, 1.965598e-002, -3.691737e-002, -2.616903e-002, 2.821338e-002, 6.273389e-002, 7.376978e-002, 5.611286e-002, 6.032951e-002, 7.160766e-002, 5.267695e-002, -5.996925e-002, -8.503493e-002, 3.320084e-003, 1.839624e-002, 7.685816e-003, -1.186139e-002, 5.457235e-002, 1.193401e-001, -8.334968e-002, -2.154808e-002, 5.338450e-002, 4.361859e-002, 2.177546e-002, -1.236890e-002, 7.129087e-003, -1.075480e-002, -1.677463e-002, 1.064623e-002, 2.422694e-002, 2.327725e-002, 1.786460e-002, 1.263078e-002, -9.544487e-003, -4.779713e-002, -7.888029e-002, -2.853397e-002, 3.644548e-003, 1.478871e-002, -2.801157e-002, -2.632556e-002, 1.794130e-002, 7.501917e-002, -2.379923e-002, -8.079777e-002, -2.293482e-002, -3.008527e-002, 1.863534e-002, 2.372657e-003, -6.931865e-003, -4.618490e-003, 2.610039e-003, -6.394514e-003, 9.773427e-004, -1.239133e-002, -1.259236e-002, -2.357409e-002, -3.027285e-002, -2.506206e-002, -2.314329e-002, -2.143865e-002, 2.201879e-005, -1.615247e-002, -3.297753e-002, -3.861228e-002, -6.569385e-003, 1.239520e-002, 9.109234e-003, -2.971555e-002, -2.140014e-002, -3.150479e-002, -2.477619e-002, 1.298951e-002, -4.575271e-003, 5.170246e-003, 2.585015e-002, 1.995588e-002, 1.448378e-002, 5.388184e-003, 1.485767e-002, 2.550582e-002, 4.291246e-002, 2.036761e-002, -5.130948e-002, -3.001926e-002, 4.760225e-003, 1.181133e-002, 2.532892e-002, -2.421281e-003, 9.510110e-003, -2.105093e-002, -3.724881e-002, 1.072223e-002, 3.683601e-002, 2.517651e-002, -6.028259e-002, 9.789609e-003, -7.882901e-003, 3.892658e-003, 4.417121e-002, 3.138279e-002, 5.248365e-002, 6.998305e-002, 7.604405e-002, 7.449307e-002, 1.359975e-002, -8.561729e-002, -6.926108e-002, 2.231841e-002, -1.164817e-003, 5.260275e-002, 7.037533e-002, 9.820312e-003, 2.263024e-002, 3.186481e-002, -5.798532e-002, -6.588787e-002, 1.336386e-002, 7.091674e-002, -5.028270e-002, -8.339058e-003, -1.091341e-002, 2.026529e-003, 4.036745e-002, 2.247537e-002, 1.778845e-002, 2.916889e-002, 1.754554e-002, -2.193128e-002, -8.824669e-002, -8.522133e-002, 4.740677e-002, -5.756923e-003, -8.730001e-002, 1.895477e-002, 6.551690e-002, -2.498844e-002, -3.560588e-002, 1.869322e-002, -6.510589e-002, -1.156717e-001, -7.716170e-002, -6.018928e-003, 5.469886e-004, -3.182532e-003, -6.361665e-003, -9.335545e-004, 4.389354e-002, 2.766765e-002, 3.211861e-002, 3.873363e-002, 2.237351e-002, -1.577181e-002, -3.038416e-002, 8.827611e-003, 7.080671e-002, -3.012171e-002, -4.504115e-002, 1.678299e-002, 7.213225e-003, -4.119018e-002, -2.540614e-003, 3.245806e-002, -2.362244e-002, -2.797187e-002, -4.745892e-002, -3.928660e-002, 5.797636e-002, 5.068070e-003, 1.463329e-003, -1.522633e-002, 4.071445e-002, 1.924596e-002, 1.484297e-002, 4.390185e-002, 4.742230e-002, 3.001236e-002, 1.989493e-002, 1.727726e-002, 1.565548e-002, 2.003225e-002, 3.806844e-002, -1.827432e-002, -1.033727e-002, -1.644023e-002, 5.399538e-002, 5.332364e-003, -5.241655e-003, 8.837759e-002, 4.222454e-002, -4.152789e-002, 3.693409e-002, -9.734502e-004, 7.416949e-003, -3.255552e-002, 1.780343e-002, 1.824069e-003, -1.635470e-002, 1.743211e-002, 3.122488e-002, 2.069475e-002, -6.738461e-003, -3.309405e-002, -8.361724e-003, 1.184866e-002, -1.966748e-002, 3.079786e-003, 4.782936e-002, -1.449841e-002, -3.841822e-002, -1.828695e-002, 2.072246e-002, 9.854768e-002, 5.100274e-002, -4.506844e-002, -1.102478e-002, -7.120006e-003, 9.682992e-003, -3.099847e-002, -5.649890e-003, -1.687031e-002, -5.777914e-002, -3.245187e-002, -1.252314e-002, -2.653717e-002, -4.648788e-002, -5.026099e-003, 4.830273e-002, 9.233853e-003, -5.760825e-002, -9.524848e-003, 5.385045e-002, 2.218655e-002, -1.337161e-002, 7.126055e-003, 1.446283e-002, 3.820178e-002, 2.512587e-002, -2.838269e-002, -2.292433e-002, 2.722117e-003, 3.400716e-002, -2.160165e-002, -8.529422e-003, -1.890482e-002, -7.765969e-002, -7.217067e-002, -4.748823e-002, -4.765939e-002, -1.117503e-002, 7.823966e-002, 1.066949e-001, 3.857030e-002, -4.553415e-002, -8.003140e-002, -4.387324e-002, -3.541291e-002, -4.555159e-002, -3.334858e-002, -2.233891e-002, -1.596309e-004, 1.671049e-002, 7.124979e-003},
{-7.278186e-002, -1.762489e-002, -3.907248e-003, -4.720466e-002, -5.606126e-003, 6.866552e-002, 1.271735e-002, -7.106323e-002, -9.057099e-002, -5.157781e-002, 1.419166e-003, 2.389271e-002, 1.084952e-002, -1.797199e-002, -4.761866e-002, -5.725765e-002, -5.651757e-002, -4.870173e-002, -3.445526e-002, 3.977795e-003, 2.236838e-002, 4.398283e-002, 6.745432e-002, 8.123393e-002, -3.039309e-002, 6.085490e-003, 1.128334e-002, -2.838312e-002, 1.511082e-002, 8.500013e-002, 2.511283e-002, -4.587937e-002, -3.933651e-002, 1.802386e-002, 6.661966e-002, 8.012609e-002, 5.908200e-002, 1.751793e-002, -3.530035e-003, -5.215793e-003, -1.252840e-002, -2.466054e-002, -3.012600e-002, -9.534721e-003, 1.910960e-003, 1.538155e-002, 2.217827e-002, 3.676300e-002, 1.778530e-002, 1.526159e-002, 1.970568e-002, -2.086957e-002, 8.958190e-003, 6.957151e-002, -3.945876e-003, -5.748744e-002, -2.478466e-002, 3.560038e-002, 4.958301e-002, 1.405786e-002, -4.073308e-002, -5.776852e-002, -1.338897e-002, 4.613277e-002, 5.004701e-002, 1.467654e-002, -1.277486e-002, -2.432765e-002, -5.751728e-002, -7.886710e-002, -1.041967e-001, -9.669559e-002, 4.219474e-002, 9.743417e-003, 4.455696e-002, 9.954930e-003, 9.543166e-003, 4.012726e-002, -3.860868e-002, -7.131623e-002, -2.141145e-002, 5.099806e-002, 8.903273e-002, 5.226094e-002, -3.192597e-002, -9.104779e-002, -1.516812e-002, 1.079238e-001, 1.199026e-001, 5.940998e-002, 3.240224e-002, 3.801303e-002, 1.172414e-002, -8.726570e-004, 5.198188e-004, -6.304104e-003,


© ISO/IEC 2004 — All rights reserved

Copyright International Organization for Standardization
Provided by IHS under license with ISO
No reproduction or networking permitted without license from IHS
Not for Resale

2.347566e-002, 3.358017e-003, 8.255183e-002, 3.131957e-002, 1.729815e-002, 7.301284e-002, 5.295507e-002, 1.782414e-002, 1.061768e-002, 2.355608e-002, 3.071665e-002, -8.462327e-003, -5.439836e-002, -6.881706e-002, 1.756389e-002, 1.231380e-001, 7.478971e-002, -2.548097e-002, -7.881427e-003, 6.360552e-002, 5.288142e-002, 1.415432e-002, -3.672504e-002, -6.011641e-002, 4.147370e-003, -5.336426e-003, 5.550711e-002, 1.372203e-002, -1.192080e-002, 3.481559e-002, 1.356521e-002, -5.784411e-002, -8.416483e-002, -4.472868e-002, 1.691376e-003, 4.229714e-003, -5.546814e-002, -8.445092e-002, 2.032749e-002, 9.863154e-002, -7.614736e-002, -2.037193e-001, -1.197306e-001, 3.852919e-002, 3.211187e-002, 1.757425e-002, 2.702741e-002, 1.946699e-002, -9.027665e-003, -4.838758e-002, -6.155101e-002, -9.328979e-002, -9.158662e-002, -2.028147e-002, -3.299214e-002, -6.918677e-002, -2.542153e-002, -1.134369e-002, 1.528664e-002, 5.261364e-002, 3.407305e-002, -2.346412e-002, 1.318237e-002, 5.477282e-002, -1.166114e-001, -1.998445e-001, -7.774894e-002, 3.557707e-003, 1.906177e-002, 8.771851e-002, 8.618793e-002, 2.502257e-002, 5.977831e-003, -3.616875e-003, -3.613170e-002, -6.299338e-002, -3.061722e-002, 6.015488e-003, -2.148475e-002, -2.953999e-002, 8.472193e-002, 2.259127e-002, -1.523482e-002, 3.886751e-002, 7.528202e-002, -2.137401e-002, 1.637587e-002, 9.388333e-002, 4.902404e-002, 6.620844e-002, 1.153858e-001, -2.402352e-002, -1.476209e-002, 6.521220e-002, -3.450201e-003, -9.723948e-002, 1.514862e-002, 3.653731e-002, 7.890456e-002, 7.529986e-002, 2.566562e-002, -6.616724e-003, -4.913296e-002, -6.975642e-002, 8.718020e-002, 3.458918e-002, -5.477431e-003, 5.630421e-002, 4.068045e-002, -2.708156e-002, -5.432162e-002, 4.917741e-002, 2.611850e-002, 5.474899e-002, 7.546398e-002, -5.815030e-002, -8.527520e-003, 6.527751e-002, -9.036248e-003, -5.173747e-002, 6.998445e-003, 7.849361e-003, 2.226194e-002, 2.510735e-002, -5.105167e-003, 2.504490e-002, 1.592320e-002, -4.283879e-002, -5.146789e-002, -5.133859e-002, -4.320762e-002, 3.444903e-003, 2.844124e-002, -7.274728e-003, -5.873708e-002, 3.764520e-002, -1.015533e-002, 1.259817e-002, 4.502642e-002, -5.233979e-002, 5.590351e-004, 5.624021e-002, -3.009636e-002, -1.128801e-001, 6.876611e-003, -1.591878e-002, -1.072730e-002, -5.945936e-003, -3.424350e-002, 2.052317e-002, 5.403104e-002, 5.507941e-003, -4.274037e-002, -4.265657e-002, -4.057778e-003, 4.817303e-002, 6.200592e-002, -1.804750e-003, -4.658301e-002, 4.646141e-002, -3.984747e-002, -7.217006e-003, 3.132425e-002, -3.728523e-002, -2.249424e-002, 7.314111e-002, 3.858584e-002, -5.269774e-002, 2.467579e-002, -2.828588e-002, -1.645402e-002, -4.215877e-003, -3.797625e-002, -1.174624e-002, 2.122825e-002, -1.390294e-002, -3.993697e-002, -1.602888e-002, 3.321404e-002, 6.568495e-002, 3.419444e-002, -4.061900e-002, 1.098414e-002, 1.397111e-002, -5.604493e-002, -1.954871e-002, 2.195387e-002, -1.354603e-002, -2.650284e-002, 1.542458e-002, 5.414722e-002, 2.460887e-002, 2.948937e-002, -3.335859e-002, -4.215374e-002, 1.264911e-002, -2.877991e-002, -3.390329e-002, -3.017789e-002, -6.483675e-002, -7.717095e-002, -4.245967e-002, -1.992066e-003, 1.174394e-002, -3.048858e-003, -1.869622e-002, 4.221971e-002, -1.129980e-002, -4.957352e-002, -2.143102e-002, 2.195890e-002, -3.306234e-004, 1.468110e-002, -3.954274e-003, -1.038151e-002, 4.970190e-004, 2.063759e-002, -2.573772e-002, -4.650511e-002, 3.111207e-002, 1.955698e-002, 1.594850e-002, 1.033894e-002, -4.904687e-002, -7.444740e-002, -4.903148e-002, 6.020976e-003, 4.368417e-002, 2.666432e-002, 6.473920e-003, 1.657718e-002, 1.187306e-004, -1.835483e-002, 7.050838e-004, 3.678379e-002, 1.898874e-002, 9.518414e-003, 2.234370e-002, -1.043890e-002, -3.199081e-002, 2.745676e-002, -1.914098e-003, -3.905144e-002, 3.113555e-002, 4.289019e-002, 4.012278e-002, 5.913239e-002, 4.884579e-002, 4.037265e-002, 6.307843e-002, 7.983233e-002, 4.767328e-002, -2.166447e-002, -2.660296e-002, 2.524284e-003, 7.022109e-003, 1.982554e-002, 2.263235e-002, 3.407336e-002, 3.450723e-002, -1.156378e-002, -2.255172e-002, 1.430722e-002, 3.424487e-003, 7.340604e-004, 1.261858e-002, -1.523041e-002, 2.276765e-002, 2.043799e-002, 1.009264e-002, 2.220682e-002, 7.619579e-003, 5.960825e-003, 1.671099e-002, -4.271179e-003, -4.083264e-002, -6.830229e-002, -3.442890e-002, -1.414487e-003, -1.309744e-002, 2.541508e-002, 1.656439e-002, -2.161394e-002, 2.099659e-002, 3.074070e-002, -1.041186e-001, -3.501104e-002, -4.630191e-003, -5.138917e-002, -1.314091e-002, -3.079856e-003, 1.980719e-002, 1.045708e-002, -1.936251e-002, -1.836021e-002, -2.751549e-002, -4.429442e-002, -4.231562e-002, -3.702997e-002, -3.930321e-002, -5.307713e-002, 3.492485e-002, 3.320377e-002, -3.564153e-002, 3.488909e-002, 5.391227e-002, -3.457645e-003, 3.561437e-002, 9.879945e-002, -7.479078e-002, -7.928814e-002, -2.514872e-002, -7.265568e-002, -2.800728e-002, 1.086925e-002, 3.074448e-002, 1.291629e-002, -2.270492e-002, -2.864603e-002, -1.905986e-002, -1.666487e-002, 7.005897e-003, 3.190528e-002, 1.769156e-003, -9.246940e-003, 7.430015e-002, 1.484250e-002, -7.446825e-002, -2.885568e-002, -1.721760e-002, -5.377249e-002, 1.146410e-003, 8.766401e-002, -3.523888e-002, -4.560051e-002, 1.100756e-002, -5.737960e-002, -2.151728e-002, 1.766974e-002, 1.581329e-002, 3.407123e-004, -1.356317e-002, -1.106703e-002, 1.920653e-002, 4.861430e-002, 7.470920e-002, 5.534917e-002, -5.839814e-003, -4.956079e-003, 5.048357e-002, -7.477075e-003, -6.655710e-002, -4.017028e-002, -3.996315e-002, -4.977132e-002, -3.186954e-003, 5.765657e-002, -6.502579e-003, -8.740086e-004, 3.772610e-002, -6.015045e-003, 2.344241e-002, 3.132040e-002, 3.171195e-003, -2.259631e-002, -1.782003e-002, 7.969356e-004, 4.687746e-002, 8.402510e-002, 7.434397e-002, -3.505153e-003, -5.788682e-002, -4.479500e-002, -1.010637e-002, -3.330638e-002, -2.000270e-002, 1.373130e-002, -5.541033e-003, -3.930107e-002, -5.241199e-002, -3.199888e-002, -1.718804e-002, 8.084931e-003, 2.071914e-002,

© ISO/IEC 2004 — All rights reserved


Copyright International Organization for Standardization
Provided by IHS under license with ISO
No reproduction or networking permitted without license from IHS
Not for Resale

2.620516e-002, 5.178795e-002, 4.646518e-002, 2.238208e-003, -4.539468e-002, -2.744561e-002, -8.041798e-003, 4.586957e-002, 6.990617e-002, 1.943736e-002, -5.699423e-002, -6.601728e-002, -2.969970e-002, 6.690527e-003, 2.448469e-002, 5.602638e-002, 5.810098e-002, 4.767813e-002, 6.278221e-002, 2.625616e-002, 1.008497e-002, 2.279861e-003, -4.659971e-003, -1.320997e-002}, {1.104487e-001, 2.770378e-002, -2.794549e-002, -6.379487e-003, -2.340392e-002, -7.488645e-002, -3.183405e-002, 4.290594e-002, 5.646238e-002, 2.112516e-002, -2.153905e-002, -6.048730e-002, -7.686073e-002, -5.859650e-002, -1.654509e-002, 3.438506e-002, 6.016166e-002, 5.406068e-002, 2.053925e-002, -3.114105e-002, -4.349732e-002, -1.904610e-002, 1.433081e-002, 4.002142e-002, 6.052223e-002, 2.826030e-003, -3.445302e-002, -2.500985e-002, -4.681285e-002, -6.698064e-002, -1.697017e-003, 6.949561e-002, 7.658964e-002, 4.678069e-002, 2.314418e-002, 1.301223e-002, -7.974466e-003, -1.466719e-002, -7.497246e-003, 2.544485e-002, 3.954860e-002, 2.982674e-002, -2.082121e-002, -7.226763e-002, -7.587528e-002, -5.195515e-002, -1.724364e-002, 1.818709e-002, 5.357192e-003, -6.114282e-003, -2.109929e-002, -1.528093e-002, -1.967956e-002, -2.511735e-002, 2.084243e-002, 3.962958e-002, 2.315879e-002, -2.113239e-002, -5.167967e-002, -1.120233e-002, 2.014819e-002, 2.589502e-002, 9.581810e-003, 8.933162e-003, 2.000386e-002, 2.146066e-002, -1.896730e-002, -3.035961e-002, 4.955927e-003, 1.925521e-002, 7.043275e-003, -2.081627e-002, -4.061438e-002, 7.056352e-003, 2.550377e-003, 1.669573e-002, 1.541693e-002, 1.394555e-002, 3.462433e-002, 2.627668e-003, -2.517586e-002, -2.546890e-002, -2.037689e-002, -3.643633e-003, -9.454051e-004, -1.115297e-002, -1.942491e-002, -1.529953e-002, 4.776161e-003, 1.869030e-002, 1.154365e-002, 3.189339e-002, 1.068534e-001, 9.453420e-002, -5.264625e-003, -9.545675e-002, -6.518112e-002, 1.369289e-002, 1.024207e-002, 3.288126e-002, 3.819298e-002, 1.192136e-002, 5.239108e-003, -2.115012e-002, -4.528044e-002, -2.286264e-002, 1.092192e-002, 2.573595e-002, 3.605687e-002, 3.368728e-003, -3.870629e-002, 9.643906e-003, 2.830217e-002, 4.317758e-002, 3.850679e-002, -2.189089e-003, -9.977778e-003, -4.896134e-002, -3.813283e-002, 7.654695e-003, -3.492263e-002, -2.772460e-003, 2.796374e-002, 3.073739e-002, -5.026282e-003, -1.706264e-002, 1.727533e-002, 3.046136e-002, 1.758035e-002, -1.351660e-002, -3.806522e-002, -5.005374e-002, -7.176252e-002, -7.340963e-002, -3.308198e-002, 9.948440e-003, 1.131461e-002, 4.985105e-002, 7.736188e-002, -9.940535e-003, -7.850968e-002, -3.084333e-003, 9.342401e-002, 8.875869e-002, 1.098427e-002, -4.068941e-002, -8.322319e-003, 3.416480e-002, 3.349854e-003, 2.194800e-002, 3.310792e-002, 4.527990e-003, -4.536038e-002, -4.772163e-002, -3.662938e-002, 3.161225e-003, 3.530000e-002, 3.162691e-002, 2.641914e-002, 1.922956e-002, -1.595658e-001, -1.497741e-001, 3.665105e-002, 2.084053e-002, -4.716394e-003, 1.129527e-001, 6.176341e-002, -9.685522e-002, 4.796356e-002, -3.842401e-002, -6.976581e-003, 2.599470e-002, 1.028292e-002, -6.606166e-003, -9.687594e-002, -1.348731e-001, -9.248825e-003, 7.483265e-002, 6.944973e-002, -1.243648e-002, 4.247297e-002, 6.141397e-002, 9.008549e-002, 1.301315e-001, -1.319450e-001, -1.406625e-001, 2.659741e-002, -1.058300e-002, -7.177332e-002, 2.537825e-002, 8.711264e-002, 4.241391e-003, 7.227108e-002, 2.062146e-002, 6.576219e-003, 2.753845e-002, 3.729841e-002, 3.657289e-002, 6.674417e-002, 6.318395e-002, -8.101515e-002, -5.081911e-002, -5.508111e-003, -1.777318e-002, 5.395161e-003, -3.801284e-002, 1.226818e-002, 8.769966e-002, -4.093064e-002, -2.739172e-002, 1.457547e-002, -3.722572e-002, -1.100085e-001, -4.663132e-002, 6.523238e-002, 3.587703e-002, 5.206731e-002, 4.378868e-002, 1.472096e-002, -8.041033e-003, 2.700593e-002, 7.056935e-002, 4.931353e-002, -2.363351e-003, -2.359778e-002, -4.942187e-002, -1.410269e-002, 2.306936e-002, 4.654555e-004, -4.542310e-002, -9.167438e-003, -5.971224e-003, 1.272826e-002, 4.021832e-002, 2.334634e-002, 1.157922e-002, 5.811949e-003, 9.923642e-003, 5.188477e-002, 3.714865e-002, 1.639920e-002, 3.849117e-002, 2.424224e-002, -3.012135e-002, -1.436617e-002, 3.046579e-002, 6.229738e-003, -3.715251e-002, -5.019121e-002, -3.773651e-002, -7.946714e-003, 7.301326e-003, -4.072996e-002, -5.441985e-002, 1.921565e-002, -5.102318e-002, 3.481381e-002, 2.968979e-002, 2.192833e-002, 2.776681e-002, 9.413774e-002, 7.719283e-002, 3.227057e-002, -8.557313e-003, -2.047089e-002, -3.762962e-003, 2.575527e-002, 7.914999e-003, -3.085116e-002, 7.514083e-004, -3.322470e-004, -2.479795e-002, -3.446320e-002, -2.159665e-002, 3.084689e-003, -2.031608e-003, -5.610113e-002, -1.400287e-002, -1.423136e-002, -4.765371e-002, 3.581207e-002, 1.426400e-003, -1.491342e-002, 1.488611e-002, 2.393679e-002, 1.037579e-001, 4.438573e-002, -2.081080e-002, -4.415572e-002, -4.619992e-002, -4.153622e-003, 5.440649e-002, 2.953920e-003, -3.456349e-002, -2.898010e-002, -2.755876e-002, -1.784504e-002, 6.404987e-003, 2.095824e-002, 1.048211e-002, 3.819947e-003, 4.569198e-002, -4.453193e-002, -2.102590e-002, 3.278487e-002, 9.086871e-003, -3.227166e-002, 1.470006e-002, -6.204201e-002, -2.293028e-002, 2.910632e-002, -1.204521e-002, 3.026170e-003, -2.679882e-002, -3.363996e-002, 1.235011e-002, 4.738664e-002, 1.122817e-002, -2.648140e-002, -2.423421e-002, -6.159743e-003, 4.461535e-003, 2.492531e-002, 3.975709e-002, 4.629628e-002, 1.430536e-002, -3.166080e-002, 1.975072e-004, 5.960130e-002, 3.590577e-002, -2.525512e-002, 2.306632e-002, 4.323298e-003, -1.142013e-001, -1.305487e-001, -7.269788e-002, 3.862707e-002, 2.037735e-003, -4.036024e-002, -4.584694e-002, 2.075009e-003, 2.569254e-002, 3.765261e-002, 6.841909e-002, 8.798395e-002, 1.011540e-001, 8.610124e-002, 4.455611e-002, -1.433203e-002, 1.384144e-003, -1.793680e-003, 4.020364e-002, 9.097936e-002, 4.390994e-002, -1.264533e-002, 5.059233e-002, 1.126586e-001, 3.123552e-002, -8.846553e-002, -1.203033e-001, -


© ISO/IEC 2004 — All rights reserved

Copyright International Organization for Standardization
Provided by IHS under license with ISO
No reproduction or networking permitted without license from IHS
Not for Resale

8.109585e-003, 7.058110e-003, -3.427001e-002, -8.709424e-002, -6.016708e-002, -2.826579e-002, 5.789772e-003, 2.688382e-002, 5.800899e-002, 5.365214e-002, 5.396279e-003, -3.926929e-002, -2.972053e-002, 1.109258e-002, -2.597374e-002, 3.912772e-003, 6.352407e-002, -2.211967e-002, -7.152691e-002, -7.388382e-003, 8.099810e-002, 8.799051e-002, 4.136646e-002, 6.997044e-003, -9.510149e-002, -1.567221e-002, -1.075408e-002, -6.898095e-002, -7.241034e-002, -6.966675e-002, -5.594614e-002, -3.749088e-002, -2.317555e-002, -2.732261e-002, -3.316394e-002, -2.660403e-002, -2.305925e-002, 2.567031e-003, -3.433189e-002, -3.478251e-002, 1.390300e-002, -2.516657e-002, -1.674431e-002, -4.044119e-002, -8.534469e-002, -1.624070e-002, 3.455493e-002, 4.392524e-002, -1.103197e-001, -1.514982e-002, 3.566731e-002, -3.213959e-002, -4.824575e-002, -4.944088e-002, -4.538029e-002, -4.282399e-002, -3.507696e-002, -8.171411e-003, 2.438061e-002, 1.778226e-002, -6.160138e-002, -7.398995e-002, -7.532241e-002, 3.457075e-002, 7.921972e-002, 1.649822e-002, 2.778114e-002, -2.890153e-002, -1.002208e-001, -7.185574e-002, -6.602746e-003, 1.641428e-002, -1.768340e-002, 4.525482e-002, 6.051376e-002, 1.578388e-002, -8.973210e-003, -5.481826e-003, -9.765113e-003, -1.489873e-002, -5.104049e-003, 2.979868e-002, 5.239147e-002, 1.406041e-002, -4.188111e-002, -3.656011e-002, -2.513447e-002, 4.501408e-002, 7.433798e-002, 2.005317e-002, 2.681503e-002, -2.407500e-004, -3.694873e-002, -3.210422e-002, -1.278668e-002, -3.362208e-003, 7.142849e-002, 3.947767e-002, 3.182891e-003, 2.684239e-002, 2.791935e-002, 3.671740e-002, 4.049832e-002, 2.181040e-002, 1.440001e-002, 4.049387e-002, 2.012456e-002, -3.609208e-002, -1.061013e-002, 4.478783e-002, 1.102665e-002, -1.146336e-002, -1.461788e-002, -1.357594e-002, 3.551581e-002, 6.071504e-002, 3.326057e-002, 3.067317e-003, -1.652325e-002, -1.620757e-002, 6.059057e-002, -1.967311e-002, -7.599221e-002, 5.752827e-003, 4.207677e-002, 5.811639e-002, 6.089986e-002, 4.409266e-002, 1.588016e-002, 1.341581e-002, -1.947456e-002, -2.192284e-002, 2.909644e-002, 4.935969e-002, 9.661530e-003, -4.058102e-002, -7.334525e-002, -6.380029e-002, -2.854667e-002, 3.873479e-003, 9.057365e-003, -3.642218e-004, -1.381030e-002, -2.499421e-002},
{-9.919847e-003, -4.998373e-003, 1.918570e-002, 2.825730e-002, 2.851682e-002, -3.598553e-003, -2.899374e-002, -5.325048e-003, 4.804623e-002, 9.009908e-002, 8.445559e-002, 3.957488e-002, -1.949784e-002, -6.140420e-002, -8.118846e-002, -6.488459e-002, -4.743375e-002, -4.031256e-002, -2.700274e-002, -1.461565e-002, 1.569826e-002, 4.519513e-002, 5.278125e-002, 6.485873e-002, -2.348441e-002, -3.220829e-003, 2.282142e-002, 9.920448e-003, 6.019876e-003, -2.221463e-002, -3.993923e-002, -1.243978e-002, 2.503451e-002, 3.313226e-002, 9.779473e-003, -1.479897e-002, -4.235590e-002, -5.499941e-002, -5.451547e-002, -4.073535e-002, -1.909927e-002, -1.200490e-002, 1.317578e-002, 4.229778e-002, 6.753197e-002, 5.017434e-002, -4.926638e-003, -5.490783e-002, -2.476569e-002, 5.845666e-003, 4.740463e-003, -1.352462e-002, -1.550991e-002, -3.112734e-002, 7.905417e-003, 5.303429e-002, 5.166098e-002, 9.294583e-003, -2.666595e-002, -3.011006e-002, -2.163826e-002, -1.566895e-002, 6.169073e-004, 1.202419e-002, 1.931044e-002, 2.867032e-002, 6.342724e-002, 1.105545e-001, 1.215261e-001, 2.106874e-002, -1.229274e-001, -2.204298e-001, -8.790924e-003, 1.723378e-002, -1.418514e-002, -2.823715e-002, -4.633039e-002, -4.006329e-002, 3.883499e-002, 7.327141e-002, 5.980594e-002, 1.704869e-002, -2.421251e-002, -2.335617e-002, 8.824516e-003, 2.601433e-002, 1.911377e-002, -1.609738e-003, -2.446447e-002, -3.174794e-002, 1.229623e-002, 8.139501e-002, 1.089581e-001, 6.445809e-002, 2.269838e-003, -8.759724e-003, 1.544669e-002, 2.864634e-002, 4.671277e-003, -1.757074e-003, -5.409115e-002, -3.140899e-002, 4.241712e-003, 2.286574e-003, 7.835194e-003, 3.680335e-002, 2.313413e-002, -5.992764e-003, -1.210989e-002, 1.023670e-003, -3.891149e-003, -2.153540e-002, -7.742378e-002, -1.086846e-001, -7.289454e-002, -2.991747e-002, -3.927436e-002, -6.783875e-002, -4.228431e-003, 8.172520e-002, 4.195705e-002, 4.341172e-002, 5.716982e-002, 2.776496e-002, -4.339791e-002, -2.922225e-002, -3.214537e-002, -4.429067e-002, -1.138409e-002, 1.281091e-002, 1.571867e-002, -5.365003e-003, -2.292382e-002, 7.575740e-003, 7.846614e-002, 8.329661e-002, 2.209084e-002, -1.621829e-002, 1.832363e-002, 6.857758e-003, -4.312479e-002, -8.043646e-002, -6.086607e-002, -2.029249e-002, 1.443497e-002, -2.240985e-002, 8.751598e-003, 1.647147e-002, -5.853135e-002, -4.114931e-002, -1.350519e-002, -8.358321e-003, 2.138600e-002, 3.689071e-002, 3.008787e-002, 3.031795e-002, -4.702089e-002, -3.545673e-002, 7.413264e-002, 1.077663e-001, 2.925643e-002, 2.367547e-002, 8.242409e-002, 6.694658e-002, 7.799428e-002, 3.971787e-002, 2.380722e-002, 3.557323e-002, -3.447344e-002, -8.812291e-002, -5.077663e-002, 9.393770e-003, -3.466980e-002, -8.096764e-003, 1.878962e-003, -6.184261e-002, -9.853487e-003, 3.781918e-002, 3.194758e-002, 1.213495e-001, 2.947304e-002, -3.176678e-002, -1.232606e-002, -5.361807e-002, -9.645383e-002, -9.123851e-002, -1.348580e-002, -5.544878e-002, 7.124843e-002, 6.317839e-002, 9.332986e-003, 2.828997e-002, -3.121318e-002, -2.501284e-002, -3.215746e-002, -2.227589e-002, -3.492205e-002, -1.840493e-002, -7.369039e-002, -1.073094e-001, 3.982518e-002, 5.343195e-002, -2.523258e-002, -3.016815e-002, 2.885237e-003, -2.974108e-002, -6.054412e-002, -7.336624e-002, 2.535387e-002, 1.602617e-002, 2.118287e-002, -9.551147e-002, -3.534176e-002, -5.879703e-002, -6.056691e-002, 9.623142e-003, -4.482198e-003, 4.061497e-002, -1.916947e-002, -4.236184e-002, 4.546504e-003, -1.296353e-003, -8.648967e-002, -8.779826e-002, 4.069907e-003, 5.058055e-002, -6.716056e-003, -5.984895e-002, -5.680552e-002, -6.811059e-003, -3.410301e-002, -1.092935e-002, 5.433972e-002, 2.464825e-002, 3.518452e-002, -7.527999e-003, -3.204861e-002, -6.676220e-002, -5.584654e-002, 1.371009e-002, -

© ISO/IEC 2004 — All rights reserved


Copyright International Organization for Standardization
Provided by IHS under license with ISO
No reproduction or networking permitted without license from IHS
Not for Resale

5.714327e-003, 5.480584e-002, -1.873442e-003, -5.609714e-002, 5.516360e-002, 7.583536e-002, 6.210686e-003, -1.981409e-002, 6.163781e-003, 1.308845e-002, -1.246075e-002, -3.115979e-002, -4.578381e-003, 5.613987e-002, 3.942472e-002, 2.967819e-002, -7.209990e-003, -4.872938e-002, -1.643223e-003, 4.420592e-002, 5.951874e-002, -2.990881e-002, -5.283475e-002, -1.611026e-002, 8.834501e-004, 3.044376e-002, 2.553807e-002, -1.916612e-002, 6.039272e-002, 1.215824e-001, 9.139626e-002, 7.390162e-002, 7.345943e-002, 5.696486e-002, 2.920707e-002, 1.786025e-002, 4.146465e-002, 6.469130e-002, 5.431226e-002, 2.209542e-002, -4.586334e-002, -7.313118e-002, -3.667705e-002, 3.152262e-002, 1.068073e-001, 2.951290e-002, -6.849862e-002, -4.541612e-002, 4.832156e-003, -5.428490e-003, 4.354254e-002, 2.133543e-002, 5.278438e-002, 7.027008e-002, 6.681311e-002, 7.601516e-002, 6.480191e-002, 4.060440e-002, 1.726640e-002, 3.603003e-003, 2.040856e-002, 3.839521e-002, 4.942546e-002, -2.076266e-003, -1.777269e-002, -1.781341e-002, -4.436816e-002, -2.579315e-003, 4.467179e-002, 2.347756e-002, -3.347838e-002, -5.605879e-002, -1.166616e-003, -1.772136e-002, 2.375028e-002, 4.699306e-002, 6.438925e-002, 3.401921e-002, -3.271103e-002, -3.838121e-002, -4.122915e-002, -5.491908e-002, -6.804063e-002, -6.272950e-002, -2.294362e-002, 9.449087e-003, 7.922939e-003, -8.607363e-004, 3.975205e-002, 3.441904e-002, -1.603082e-002, -5.211136e-003, 2.012575e-002, -2.286866e-002, -6.144404e-002, -5.478187e-002, -5.028404e-002, -2.884482e-002, -1.602569e-002, 2.579678e-002, 7.311082e-002, 3.368237e-002, -3.182352e-002, -5.633943e-002, -6.569014e-002, -6.486014e-002, -4.148938e-002, -1.638069e-002, -2.526218e-002, -1.969968e-002, -1.437482e-002, -9.888397e-003, 4.383678e-002, 3.783568e-002, 7.380651e-004, -2.392096e-002, 4.143363e-003, -6.877150e-002, -4.512868e-002, -2.798331e-002, -6.094525e-002, -1.513672e-002, -4.105186e-002, -1.357107e-002, 1.941438e-002, 2.277561e-002, 1.624430e-002, 2.819202e-002, 5.271753e-002, 7.510948e-002, 8.958128e-002, 2.711166e-002, -4.338348e-002, 1.214258e-002, -3.498238e-003, -4.020495e-002, 4.613401e-003, 5.830509e-003, 1.295654e-002, 2.815258e-003, 2.982765e-002, -7.879439e-002, -3.514435e-002, 4.685869e-002, -3.054287e-002, 1.449092e-002, -3.413635e-002, -3.930997e-002, -2.836031e-002, -4.727755e-002, -4.274294e-002, 8.873761e-004, 5.403222e-002, 8.596197e-002, 6.082961e-002, -2.681699e-002, -5.808540e-002, 2.775026e-002, 9.812760e-003, 1.289328e-003, 1.067369e-002, -2.307335e-002, 2.878151e-002, 3.378095e-002, 6.256607e-002, -2.265696e-002, -3.373777e-002, 6.763573e-002, -4.567554e-003, 5.179698e-002, 3.083045e-004, -3.539760e-002, -4.848842e-002, -8.540103e-002, -9.532258e-002, -6.570952e-002, -1.401711e-002, 2.180049e-002, 4.013676e-003, -3.919841e-002, -4.961347e-002, -5.703536e-002, -5.288828e-002, 5.131788e-002, 6.248113e-002, -2.358930e-002, -2.092103e-002, 4.237491e-003, -8.748472e-003, -4.926447e-002, -2.321167e-002, 5.841641e-002, 1.172000e-002, 4.905459e-002, 2.731904e-002, 4.876135e-003, -1.321337e-002, -5.762678e-002, -8.510059e-002, -6.533834e-002, -1.754027e-002, 2.360548e-002, 2.287590e-002, 1.479361e-002, 3.809469e-002, 1.073139e-002, -8.053789e-002, -2.909080e-002, 5.604797e-002, 5.044101e-002, 4.054347e-002, -2.289444e-003, -1.091341e-002, -1.427388e-002, 1.605946e-002, 5.848519e-002, 3.244721e-002, -1.351767e-002, 1.955994e-002, 3.680004e-002, 2.739458e-002, -4.857399e-003, -3.044007e-002, -1.875494e-002, 1.958688e-002, 4.332033e-002, 1.222893e-002, -1.260464e-002, 8.786437e-003, 5.459456e-002, 3.221742e-003, -5.329560e-003, 2.569534e-003, -1.038990e-002, 6.347596e-003, 9.725253e-003, 5.557740e-002, 8.128750e-002, 5.464764e-002, 3.638179e-002, 2.961977e-002, -5.064038e-002, -2.491217e-002, 4.700610e-002, 4.300524e-002, 2.781901e-002, 1.322505e-003, 1.112169e-002, 2.841905e-002, 2.454877e-002, -4.220356e-002, -9.266316e-002, -9.674330e-002, -5.876066e-002, -1.347477e-002, 1.386683e-002, 1.725674e-002, -1.838719e-002, -3.032540e-002, -2.903789e-002, -9.400869e-003, 9.865127e-003, -4.416178e-003, -6.338086e-003},
{4.297363e-002, 6.252212e-002, 6.007678e-002, 3.776111e-002, 1.367967e-002, -2.282169e-002, -2.525675e-002, 4.730358e-003, 1.439885e-002, 1.213490e-002, -1.948439e-002, -4.045192e-002, -3.146853e-002, -4.791928e-003, -1.217235e-003, -1.576186e-002, -4.356715e-002, -6.198827e-002, -5.409659e-002, -2.629500e-002, -1.293166e-002, -6.512857e-003, -8.899197e-003, -1.042526e-003, -1.628105e-002, 9.587555e-003, 8.162296e-003, -2.652587e-003, 1.895644e-002, 1.912514e-002, 2.504277e-002, 4.066863e-002, 3.759226e-002, 6.675128e-003, -4.251888e-002, -4.874312e-002, 1.825692e-003, 6.283123e-002, 8.601725e-002, 5.791587e-002, 3.973022e-003, -2.475367e-002, -1.171894e-002, 1.774914e-002, 2.892810e-002, 4.096195e-003, -3.485157e-002, -4.796639e-002, -5.436834e-002, -2.525124e-002, -4.411608e-002, -2.385492e-002, 3.352618e-002, -6.840775e-003, -4.190181e-002, -2.369217e-002, -7.080720e-004, -3.394054e-003, -4.469611e-002, -5.832462e-002, -3.448161e-003, 8.196701e-002, 1.215070e-001, 9.604383e-002, 3.435541e-002, 6.707072e-003, 2.805771e-002, 4.161917e-002, 2.673869e-002, 7.308831e-003, 8.931890e-003, 5.553662e-002, -5.277019e-002, -3.373781e-002, -5.736561e-002, -8.662435e-003, 3.707025e-002, -5.898119e-002, -8.224002e-002, -2.263902e-002, 4.098923e-002, 7.169685e-002, 5.159739e-002, -1.200866e-002, -5.745841e-002, -2.261274e-002, 3.259098e-002, 6.744884e-003, -5.510724e-002, -7.179546e-002, -2.124085e-002, -6.017994e-003, -3.871386e-002, -2.223469e-002, 5.525806e-002, 1.502153e-001, -4.647695e-003, -1.518896e-002, -1.088011e-002, 2.261380e-002, 2.626439e-002, -3.345423e-002, -2.918256e-002, 1.583151e-002, 5.342241e-002, 7.334821e-002, 4.300546e-002, -1.447312e-002, -6.637815e-002, -4.810265e-002, 2.706517e-003, 2.754157e-003, -9.300618e-002, -9.725411e-002, 2.643602e-004, -1.340795e-003, -8.896322e-002, -8.561251e-002, -2.265174e-002, 3.116045e-002,


© ISO/IEC 2004 — All rights reserved

Copyright International Organization for Standardization
Provided by IHS under license with ISO
No reproduction or networking permitted without license from IHS
Not for Resale

6.394741e-002, 1.883191e-002, 3.913252e-002, 2.844797e-002, 3.822124e-002, -1.802004e-002, -6.680752e-002, -6.498489e-002, -3.120261e-002, 1.070383e-002, 4.064389e-002, 2.449725e-002, -6.881686e-002, -1.002282e-001, 2.249317e-002, 7.493281e-002, -3.062101e-002, -8.607508e-003, 1.259440e-001, 1.106013e-001, -1.321380e-002, -3.323982e-002, 4.346352e-003, -1.684973e-002, 6.290378e-002, 5.812323e-003, 2.091639e-002, 1.030042e-002, 2.762415e-002, 2.144195e-002, -2.255140e-002, -1.851382e-002, -5.598592e-003, -1.268800e-002, 4.100386e-002, 1.391308e-001, 6.813926e-002, -6.529039e-002, -3.414307e-002, 7.135270e-002, -3.746214e-002, -3.530563e-002, 1.197562e-001, 5.624831e-002, -5.218565e-002, -6.730098e-003, 2.341824e-002, -6.090799e-002, -1.524295e-002, -1.225735e-002, -2.539282e-003, -2.009434e-002, -1.473139e-002, 1.516275e-002, -9.468700e-003, -7.874531e-003, 6.693591e-002, -2.864432e-002, -8.014780e-002, 2.320767e-002, 7.217814e-002, 4.520832e-002, 5.552450e-002, 1.163299e-001, -2.189239e-002, -7.060682e-002, -1.218438e-002, -7.863264e-002, -3.615353e-002, 2.041843e-002, 4.999534e-002, -9.511120e-002, -5.628289e-003, 4.909943e-002, 1.306938e-002, -4.625980e-002, -9.927364e-002, -2.153075e-002, 1.968524e-002, 2.352850e-002, 5.847093e-002, 1.262128e-002, -1.042078e-002, -1.578289e-002, -6.257846e-002, 2.492308e-002, 7.381929e-002, 6.883832e-002, -1.687294e-002, -2.732324e-002, -4.234399e-002, -8.081812e-002, 2.927551e-002, -3.629560e-003, 2.487588e-002, -9.793528e-002, -2.784157e-002, -7.636267e-003, -1.566485e-002, -1.705183e-002, -6.672585e-002, -7.664243e-003, 9.568897e-003, -1.181627e-002, 2.314368e-002, 5.434520e-002, 6.640250e-002, 2.708234e-002, -4.226439e-002, -5.268900e-002, -3.152790e-002, -2.742457e-002, -2.832413e-002, -3.109402e-003, 8.053217e-003, -4.884686e-002, 4.175363e-002, 5.664337e-003, -4.414876e-002, -1.034323e-001, -8.269974e-003, -4.117961e-002, -4.440386e-002, -2.006468e-003, -4.140234e-002, -2.454954e-002, -1.771564e-002, -2.741203e-002, 1.867334e-002, 8.190465e-002, 9.430556e-002, 4.357850e-002, -6.745777e-002, -1.049132e-001, -6.650970e-002, -5.939962e-002, -1.261722e-002, 3.658410e-003, 4.897035e-002, -1.876029e-002, 4.422183e-002, 5.928710e-002, -2.911957e-004, -3.802423e-002, 2.782404e-002, -2.083702e-002, -1.473600e-002, 6.959523e-003, -1.489413e-002, -1.568522e-002, -4.108166e-002, -6.463014e-002, -4.225818e-002, 1.085873e-003, 7.588267e-003, -4.236962e-002, -9.796887e-002, -4.375669e-002, -3.350333e-002, -2.237329e-002, 1.563700e-002, 9.421151e-003, 5.806291e-002, 1.915720e-002, 2.058727e-002, 8.995012e-002, 2.619880e-002, -1.973652e-002, 1.711081e-002, 3.659507e-003, 1.325242e-002, 2.180447e-002, 1.339267e-002, 3.594243e-002, 4.941346e-003, -4.755158e-002, -5.016163e-002, -2.706920e-002, -2.458580e-002, -1.357963e-002, 2.727153e-002, 4.932790e-002, -5.316553e-003, 4.253374e-002, 4.150320e-002, -2.835328e-003, 2.401023e-002, 4.185817e-002, -3.225946e-002, 4.815154e-002, 4.824011e-002, -2.283429e-002, -1.789021e-002, -1.096735e-002, 2.719827e-002, 1.917593e-003, 2.024572e-002, 8.729245e-002, 7.831926e-002, 3.389144e-002, 3.436026e-002, 5.491690e-002, 7.813181e-002, 1.156470e-001, 1.028013e-001, 3.071901e-002, 2.774992e-002, 7.707562e-002, 2.939889e-002, -2.882168e-002, -2.363197e-002, 2.383060e-002, -2.743842e-002, -5.289549e-002, -2.364638e-003, -2.814927e-003, -2.414242e-002, -8.341028e-003, 1.251240e-002, -2.945990e-002, -1.262376e-002, 5.033884e-002, 6.139058e-002, 3.908622e-002, 4.645676e-002, 5.846703e-002, 6.133639e-002, 4.637454e-002, 1.281814e-002, 3.200530e-003, 4.308771e-002, 5.147006e-002, -2.908331e-003, -4.511558e-002, -3.876899e-002, -4.070958e-002, -1.640015e-002, -6.793358e-004, -8.747339e-002, -9.835163e-002, -6.274231e-003, 1.248827e-002, 8.437202e-003, -3.041328e-002, -3.785629e-002, 6.021748e-003, -1.203915e-002, -6.935716e-002, -9.380828e-002, -7.951010e-002, -3.884170e-002, 1.795512e-002, 9.444387e-003, -2.991893e-002, -2.838771e-002, -2.139005e-002, -2.634206e-003, -1.837576e-002, 2.852438e-002, -4.411228e-002, -8.563070e-002, 5.703515e-002, 4.182870e-002, -8.460325e-002, -1.720520e-002, 1.964287e-002, 5.592610e-003, -1.671162e-002, -3.712563e-002, -6.039424e-003, -1.619742e-002, -6.756847e-002, -9.541725e-002, -5.415476e-002, 3.077259e-002, 8.976255e-002, 3.030160e-002, -1.526186e-002, -6.508036e-002, -1.839839e-002, 6.400530e-002, 2.313037e-002, 7.113019e-002, 3.068236e-002, -7.706121e-002, -2.508664e-003, 1.354680e-001, 6.751175e-002, -3.262667e-002, 1.588467e-002, 1.018942e-002, -9.397797e-003, -2.414625e-002, -3.374282e-003, 2.892638e-004, -3.012989e-002, -4.505257e-002, 3.029478e-003, 5.878747e-002, 4.301516e-002, 2.054226e-002, 5.403745e-002, -3.839183e-002, -2.709232e-002, 2.748645e-002, -2.232772e-002, 6.462743e-003, 4.921535e-002, 4.322448e-002, -5.179078e-003, 3.497728e-002, 5.860532e-002, -2.797643e-002, 8.121385e-003, 1.358533e-002, -6.118550e-003, -6.525886e-003, 6.551571e-003, 1.407491e-002, -7.846576e-003, -2.414772e-002, -1.062345e-002, -2.389144e-002, -5.210273e-002, -1.066043e-002, 4.317840e-002, -4.234150e-003, -5.260121e-002, -7.277150e-002, -4.073000e-002, 3.906947e-002, 2.530559e-002, 2.902925e-002, -5.742509e-003, -6.002233e-002, -3.910304e-002, 2.580022e-002, -1.703229e-002, 7.248594e-003, 1.709144e-003, 1.312775e-002, 1.995200e-002, 3.223019e-002, 2.207304e-002, -1.087305e-002, -4.463642e-002, -7.945596e-002, -5.419758e-002, 1.214547e-002, 2.225705e-002, 1.688262e-002, 2.442424e-003, -4.264621e-002, -2.655700e-003, 4.546797e-002, -8.248253e-003, -5.484371e-003, 1.607067e-002, -2.381971e-002, -6.239465e-002, 6.973745e-002, -1.046474e-002, -1.177910e-002, 8.035792e-003, 4.211063e-002, 4.075851e-002, 5.920528e-002, 5.706032e-002, 1.587807e-002, -2.908457e-002, -2.693834e-002, 2.851780e-002, 6.694357e-002, 5.385561e-002, 2.543010e-002, 3.856246e-003, -2.263210e-002, -2.468958e-002, -1.377100e-002, -5.418393e-002, -1.587608e-002, 3.931856e-002, 5.093081e-002, 3.638672e-003},

© ISO/IEC 2004 – All rights reserved


Copyright International Organization for Standardization
Provided by IHS under license with ISO
No reproduction or networking permitted without license from IHS
Not for Resale

{-2.900170e-002, -2.572738e-002, -5.166916e-002, -8.659840e-002, -7.409828e-002, -3.390421e-002, 1.174728e-002, 2.957152e-002, 4.568396e-002, 8.921296e-002, 1.141450e-001, 1.158166e-001, 8.633796e-002, 3.777533e-002, -5.174786e-003, -4.889870e-002, -8.027830e-002, -9.670697e-002, -7.651969e-002, -9.233188e-003, 5.127391e-002, 8.762159e-002, 1.077690e-001, 1.132892e-001, 1.650100e-002, 7.966556e-003, 2.045820e-003, -4.645012e-003, -2.784915e-003, -2.146031e-003, -2.707705e-002, -5.392016e-002, -5.537789e-002, -3.180313e-002, -2.057104e-002, -2.343076e-002, -1.670983e-002, -1.010339e-002, -1.789997e-002, -4.156849e-002, -7.280447e-002, -9.527528e-002, -7.778356e-002, -7.205052e-003, 2.156406e-002, 1.877723e-002, -4.958034e-003, -2.640126e-002, 5.384215e-002, 2.300358e-002, 4.010817e-002, 5.878018e-002, 2.538440e-002, -2.497100e-002, -5.636705e-002, -3.565843e-002, 2.437274e-003, 4.505286e-002, 5.238891e-002, 1.383086e-002, -3.319391e-003, 1.342830e-002, 2.845846e-002, 2.079382e-002, -1.125214e-002, -4.487083e-002, -3.588546e-002, 3.517212e-002, 4.537925e-002, 1.593552e-002, -5.149771e-002, -9.931347e-002, 5.359752e-002, 7.701490e-004, 2.078487e-002, 4.438588e-002, -1.053378e-002, -5.919850e-002, -7.448081e-002, -3.086694e-002, 1.644892e-002, 4.203863e-002, 2.241473e-002, -4.107699e-002, -7.068906e-002, -3.801189e-002, 3.380163e-002, 6.837809e-002, 5.330726e-002, 6.401798e-003, -1.599305e-002, 4.042423e-002, 4.765266e-002, 1.183050e-002, -2.538113e-002, -3.874494e-002, 2.183860e-002, -4.231626e-002, -4.995196e-002, 1.192066e-002, 2.295507e-002, 8.362178e-003, -5.304180e-002, -7.734311e-002, -4.823462e-002, 8.944602e-003, 7.040828e-002, 9.411708e-002, 4.525222e-002, -2.357435e-002, -1.697768e-002, 3.960489e-002, 6.991844e-002, 7.132457e-003, -4.954314e-002, -6.776141e-003, 3.723043e-002, 5.085549e-002, 4.690110e-002, 2.875785e-002, -1.512321e-002, -3.712242e-002, -4.438028e-002, 5.939061e-002, 7.874886e-002, 3.668670e-002, -2.683250e-002, -6.834739e-002, -8.519747e-002, -4.847433e-002, -1.545338e-003, 3.752222e-002, 6.457087e-002, 2.779423e-002, -5.237955e-002, -6.068989e-003, 3.840952e-002, -2.850516e-002, -9.912340e-002, -2.705594e-002, 3.854747e-002, 8.403819e-003, -3.857865e-002, -3.925969e-002, -1.157927e-002, 9.285888e-002, 4.312666e-002, 2.312872e-002, 3.464753e-003, 5.052418e-002, 1.023200e-001, 3.817493e-002, -2.055496e-002, -2.436932e-002, -4.224679e-002, -5.566120e-002, -3.049282e-002, -2.471515e-002, -3.019485e-002, -1.745805e-002, 1.415735e-002, -1.947659e-002, -5.458213e-002, 7.688036e-002, 1.968567e-002, -5.003419e-002, -2.382499e-002, 4.833732e-002, -2.038139e-002, 1.036558e-001, 2.569452e-002, -8.585914e-002, -7.437157e-002, 4.260432e-002, 6.490538e-002, -3.044812e-002, -1.298620e-002, 4.877244e-002, 2.118863e-002, -3.757346e-002, -1.308455e-003, -6.128336e-002, -2.158805e-002, 1.406666e-003, 1.310558e-002, -4.346603e-002, -3.169072e-002, 1.438748e-001, -3.112803e-003, -1.589998e-002, 4.575601e-002, 1.778870e-002, -3.039433e-002, -3.242524e-002, -5.737065e-003, -1.798862e-002, -4.467100e-002, -3.470758e-002, -9.659188e-002, -1.139062e-001, 2.198520e-002, 2.072665e-002, -1.495136e-002, 3.624596e-002, 6.768135e-002, 1.185576e-002, -1.164419e-002, 2.521339e-004, 2.079105e-002, -1.454682e-002, -6.465737e-002, 5.207217e-002, 4.348683e-003, 4.848349e-002, 1.035337e-001, -2.294695e-002, 2.216768e-002, -4.598516e-002, 4.958737e-002, 9.357981e-002, 2.137125e-002, -2.055713e-002, -1.804368e-003, 1.978597e-002, -2.724410e-002, -5.457053e-002, -3.462269e-002, 3.770525e-002, 7.214565e-002, 5.624742e-002, -5.089789e-003, -4.784132e-002, -3.523466e-002, -1.142722e-002, -3.518069e-002, -6.271345e-002, 1.059181e-002, 4.983156e-002, 6.062752e-002, -1.435750e-002, 5.812364e-002, -6.684492e-002, 5.610883e-003, 9.750221e-002, 3.627997e-002, 9.843887e-003, 5.564778e-002, 8.653617e-002, 5.065845e-002, 1.660578e-003, -1.659071e-002, -1.815627e-002, -1.136024e-002, -8.855071e-003, -6.664593e-002, -5.134724e-002, -2.788716e-002, 4.253767e-003, 1.824586e-002, -9.274745e-002, -4.875958e-002, -1.974606e-002, -2.014318e-002, -5.218599e-002, 1.966444e-002, -4.302048e-002, -3.994849e-002, 3.522430e-002, 2.508762e-002, 4.866300e-003, 4.326841e-002, 7.625293e-002, 4.076764e-002, -5.576105e-003, -3.293432e-002, -5.362009e-002, -5.641860e-002, -3.632144e-002, -1.374616e-002, -2.261282e-002, -5.252215e-004, 1.391918e-002, 7.012179e-002, -7.489565e-003, -7.343929e-002, -1.559479e-002, -6.348952e-002, -9.912964e-002, -1.983046e-002, -5.147271e-003, -4.653754e-002, -4.327206e-002, -2.330533e-002, 2.037823e-002, 5.078834e-002, 8.164189e-002, 5.373766e-002, 1.336490e-002, -1.665819e-002, -4.113721e-002, -1.602965e-002, 4.195107e-002, 3.706637e-002, -4.343873e-003, -4.748258e-003, -4.164150e-003, 6.937418e-002, 7.741568e-002, -2.765059e-002, 3.366947e-002, 1.740643e-002, -4.561428e-002, -4.579410e-002, 4.342076e-002, -1.992585e-002, -6.858941e-002, -6.427584e-002, -3.545396e-002, 4.479341e-002, 9.644740e-002, 8.636491e-002, 5.651228e-002, 3.462833e-002, 3.799172e-002, 8.752784e-002, 1.019632e-001, 8.984577e-003, -2.432895e-002, -1.000326e-002, -3.816853e-002, 8.021346e-003, 6.870409e-002, 3.649735e-002, 2.120099e-002, 8.104694e-002, 5.720851e-002, -5.273888e-002, 5.734947e-002, 1.167356e-002, -5.210361e-002, -7.450912e-002, -7.054948e-002, -4.849594e-002, -3.119869e-002, -2.174292e-002, -1.921130e-002, -5.921869e-003, 2.622217e-002, 6.918610e-002, 3.931268e-002, -5.425668e-002, -1.789549e-002, 2.321096e-002, -3.966675e-002, -4.878515e-002, 3.136657e-003, 2.600425e-002, 5.767454e-003, -5.871403e-003, -8.833778e-004, -2.410552e-002, 3.504926e-002, 9.030108e-003, -1.696518e-002, -2.112882e-002, -4.005787e-002, -5.785043e-002, -5.786843e-002, -5.817134e-002, -3.456381e-002, -2.096173e-003, 7.814964e-003, 1.901132e-003, -2.129122e-002, -6.581934e-002, 6.495771e-002, 5.861909e-002, -8.396305e-003, -1.407023e-002, 2.826632e-002, -2.454112e-002, -2.788141e-002, 8.527482e-003, -2.832815e-002,


© ISO/IEC 2004 — All rights reserved

Copyright International Organization for Standardization
Provided by IHS under license with ISO
No reproduction or networking permitted without license from IHS
Not for Resale

2.216442e-002, 3.113073e-003, -1.014188e-002, -3.453599e-003, 1.737771e-002, 2.640892e-002, 8.740126e-003, -4.842282e-003, -4.372650e-003, 1.198894e-002, -1.581288e-002, -6.091636e-002, -3.065610e-002, -4.409817e-002, -8.614087e-002, 2.495521e-002, 1.183845e-002, -8.269003e-003, -1.085271e-002, 1.623080e-002, -4.667853e-002, -5.908636e-002, 4.562905e-002, 3.681800e-002, 5.730294e-002, -1.100909e-002, -2.414511e-002, 5.989845e-003, 2.675841e-002, 4.747992e-002, 4.176876e-002, 3.426862e-002, 2.139923e-002, -1.603539e-002, -7.811298e-002, -7.412552e-002, 3.187520e-002, 7.018349e-002, 2.135230e-002, 2.283431e-002, 9.323319e-003, 2.609818e-002, -3.200959e-002, -6.277697e-002, -2.211098e-002, -3.038876e-003, 4.150465e-002, 6.511569e-002, 4.923920e-002, -1.990925e-002, -1.971025e-002, 1.560085e-002, 1.716823e-002, 2.894521e-002, 3.741255e-002, 3.210333e-002, 7.496904e-004, -5.126534e-002, -7.334677e-002, -2.943498e-002, 1.902970e-002, 7.053555e-002, 9.107934e-002, 3.600483e-002, -2.214645e-002, -9.580952e-004, -9.325085e-003, -9.795915e-004, 2.468787e-002, 2.530781e-002, -5.492172e-004, 2.012123e-002, -1.644825e-002, -1.890592e-002, -6.423454e-003, 3.112698e-002, 7.527451e-003, -2.014286e-003, 3.156174e-003, 8.432342e-003, -1.357479e-002, -3.084438e-002, -1.137785e-003, -2.244399e-003, -5.702499e-002, -4.752238e-002, 2.861207e-002, 3.961155e-002, -3.245427e-002, -4.714612e-002, -1.985908e-002, 4.338632e-002, 5.335661e-002, 1.800948e-002, -2.998462e-002, -4.643228e-002, -6.424128e-002, -1.232080e-002, 2.648238e-002, 4.596740e-002, 9.767459e-003, -2.972214e-002, -3.164091e-002, -1.317746e-002, -9.498012e-003, 1.310228e-002, 4.332511e-002, 9.143096e-003, -3.919850e-002, -3.693198e-002, 1.768309e-002, 5.188562e-002, 1.530423e-002, -4.090433e-002, -5.720373e-002, -3.416055e-002, 1.067299e-002, 2.853026e-002, 1.030395e-002, -3.241197e-002}
};

PCLDA basis matrix $\Psi_3^c$ [40][504]={
{-1.349807e-001, -1.058312e-001, -8.931369e-002, -1.017107e-001, -1.131881e-001, -1.098201e-001, -9.974011e-002, -7.225778e-002, -3.104441e-002, -3.696044e-003, -9.887879e-003, -3.418423e-002, -4.456606e-002, -4.871143e-002, -4.358900e-002, -6.766320e-002, -1.161736e-001, -1.353455e-001, -8.633622e-002, -3.861554e-002, -5.247855e-002, -4.248280e-002, -1.592924e-002, -1.055539e-001, -2.430727e-002, 2.403731e-002, 4.248935e-002, 2.252317e-002, -1.222467e-002, -3.733903e-002, -4.607980e-002, -3.225829e-002, 7.979434e-003, 4.326440e-002, 5.360469e-002, 3.570482e-002, 2.706791e-002, 3.195273e-002, 3.648983e-002, 2.462999e-002, -2.301927e-002, -7.193363e-002, -5.551496e-002, -3.416871e-003, -1.766788e-002, -4.598607e-003, 2.297725e-002, -2.808606e-002, -9.466751e-002, -1.602879e-002, 5.658254e-002, 8.745067e-002, 5.591224e-002, 8.618848e-003, -2.052008e-002, -3.106517e-002, -2.205665e-002, -9.169537e-003, 2.984565e-003, -7.947251e-003, -1.434768e-002, -1.217147e-002, -1.520922e-002, -1.608319e-002, -2.844059e-002, -5.563304e-002, -4.493031e-002, 2.202046e-002, 7.384978e-003, 2.187396e-002, 4.351017e-002, 3.773954e-002, -2.061011e-002, -2.262242e-002, -7.294926e-004, 5.019293e-002, 5.880599e-002, 3.166945e-002, -8.041607e-003, -5.007894e-002, -6.455995e-002, -3.501892e-002, 9.009770e-003, 3.280880e-002, 3.154927e-002, 1.460984e-002, 1.522006e-002, 2.080815e-002, 2.513932e-002, -1.248348e-002, -2.612126e-002, 1.288399e-002, 1.876744e-003, 1.053354e-002, 2.593442e-002, 5.908434e-002, 7.173700e-002, 5.437132e-002, 2.014287e-002, 1.781891e-002, 4.288255e-002, 7.022772e-002, 3.977252e-002, -1.898692e-002, -5.082185e-002, -1.205968e-002, 9.438760e-003, -9.138187e-003, -3.530045e-002, -4.825237e-002, -2.241231e-002, 3.065166e-002, 5.705064e-002, 3.525903e-002, 1.742093e-003, 7.052752e-003, -1.622813e-002, -1.734942e-002, -2.248418e-002, 4.194302e-003, 1.877672e-002, 2.403578e-002, 2.865716e-002, 1.235932e-003, -8.335039e-003, 4.341063e-002, 5.074078e-002, -8.085482e-004, -1.539669e-002, 2.497573e-002, 2.655468e-002, 9.286457e-003, 8.562328e-003, 1.037055e-002, 5.805120e-003, 1.465971e-002, 2.851784e-002, 3.195573e-002, 1.139117e-002, 1.675944e-002, 6.008944e-003, -3.098438e-002, -3.129767e-002, -3.350472e-002, 6.163452e-003, -8.660552e-003, 2.177341e-002, 5.243645e-002, -4.109547e-002, 2.889205e-003, 5.211642e-002, 2.848080e-002, 4.750192e-002, 7.132591e-002, 8.167316e-002, 9.547527e-002, 1.053964e-001, 9.840056e-002, 4.999240e-002, 2.654366e-003, 1.232176e-002, 5.723358e-002, 3.961406e-002, 3.560007e-002, 4.747635e-002, 2.834581e-002, 1.783370e-002, -3.715133e-002, 2.610205e-002, 2.253318e-002, -2.514108e-002, 4.313551e-002, -5.457158e-002, -9.037639e-003, 2.888047e-002, 5.323665e-003, 3.415183e-002, 1.045111e-003, 4.423619e-002, 2.135846e-002, -6.774121e-003, 1.990941e-002, 1.403249e-002, -9.857889e-002, -2.743471e-002, 3.024587e-002, 1.232118e-002, 8.737286e-003, 4.724643e-002, 3.258607e-002, 5.865418e-002, -1.239456e-002, 3.076098e-002, 8.764826e-002, -1.102548e-002, 4.257164e-002, -4.179376e-002, -6.254963e-003, 3.766700e-002, -1.249964e-002, -2.953865e-002, -1.724689e-002, 5.505337e-002, 3.997953e-002, -3.312605e-002, -4.519297e-002, -4.119148e-002, -5.374260e-002, 1.190936e-001, 5.744529e-002, -5.455920e-002, -9.271355e-002, -6.787192e-002, -7.319308e-002, 1.974351e-003, 2.612123e-002, 8.277345e-002, 5.645225e-002, -2.642638e-003, 4.600219e-002, -5.448231e-002, -7.856074e-003, 1.005113e-002, -2.945782e-002, -4.843207e-002, -2.697061e-003, 6.589755e-002, 1.316076e-001, 1.116655e-001, -2.674053e-002, -8.519950e-002, -2.284299e-002, 1.140331e-002, 2.274933e-002, 1.678238e-002, 2.725347e-003, -1.486535e-002, -1.086624e-002, -1.376038e-002, 3.352628e-002,

© ISO/IEC 2004 — All rights reserved


Copyright International Organization for Standardization
Provided by IHS under license with ISO
No reproduction or networking permitted without license from IHS
Not for Resale

9.596949e-002, 2.624130e-002, -4.100898e-003, 1.766641e-002, -9.854074e-002, -5.380209e-002, -4.351567e-002, -6.111228e-002, -5.049082e-002, -3.385442e-002, 1.712274e-003, 9.862170e-002, 1.489695e-001, 1.237530e-001, 6.635879e-002, 3.086939e-002, -5.732291e-003, -3.265837e-003, 5.763593e-002, 8.542837e-002, 3.987488e-002, 4.345664e-002, -3.589339e-003, 3.591846e-002, 3.036029e-002, -2.473503e-002, -1.854439e-002, -5.909448e-002, -1.056019e-001, -7.338252e-002, -5.044855e-002, -6.745770e-002, -5.025851e-002, -3.525420e-002, -4.075198e-002, 5.124666e-003, 5.492059e-002, 6.220062e-002, 3.176268e-002, 5.895563e-003, -2.566491e-002, -2.555079e-002, 2.583660e-002, 4.576909e-002, 1.702254e-002, 4.167398e-002, -1.051805e-002, 1.015671e-003, -6.890852e-003, -5.086073e-002, -5.246457e-002, -6.433036e-002, -6.317151e-002, -2.334741e-002, -9.581375e-004, -3.218329e-002, -2.066246e-002, -6.973556e-004, -2.497296e-002, -2.245099e-002, 2.891953e-002, 6.136695e-002, 5.455582e-002, 3.788132e-002, 2.593873e-003, -2.834324e-002, -1.868555e-002, -1.702300e-002, -2.940360e-002, 9.752447e-003, -1.431651e-002, -4.668195e-003, -5.974993e-002, -6.767508e-002, -2.652810e-002, 8.370738e-003, 2.026177e-002, 5.161507e-002, 6.366979e-002, 3.072643e-002, 1.122795e-002, 3.674923e-002, 2.884583e-002, -3.217709e-002, -1.141716e-002, 3.791482e-002, 5.902647e-002, 4.680271e-002, 7.328855e-004, -4.447485e-002, -4.722981e-002, -4.096092e-002, -4.197625e-002, -4.169648e-003, -5.584210e-003, 5.402485e-003, -5.517998e-002, -1.618973e-002, 3.686739e-002, 6.700643e-002, 8.575611e-002, 9.248247e-002, 7.991891e-002, 5.790431e-002, 1.997111e-002, 6.487410e-003, 3.313810e-002, 2.565512e-002, 6.038420e-003, 9.743254e-003, 1.861903e-002, 1.862144e-002, -8.558530e-003, -3.271799e-002, -3.162312e-002, -1.604658e-002, -2.672123e-002, -2.358750e-002, 6.755074e-003, -4.008476e-003, -1.373826e-002, 1.291779e-002, 1.106437e-002, 2.817257e-002, 4.862679e-002, 6.323782e-002, 4.490776e-002, 3.128578e-002, -4.373440e-003, -4.407461e-002, -1.194054e-002, -2.658826e-003, 1.489707e-003, 1.816060e-002, 2.653573e-002, 2.956872e-002, 1.136096e-002, -7.016797e-003, -6.646743e-003, 7.535497e-003, -1.690529e-002, -2.441615e-002, 3.010254e-003, -3.027860e-002, 9.642524e-005, -1.125659e-002, -3.771884e-003, 2.956522e-002, 4.311406e-002, 4.729901e-002, 7.037049e-002, 1.104055e-001, 9.387072e-002, 4.982636e-003, 7.626071e-003, -1.697973e-002, -4.589092e-002, -4.486601e-002, -2.726979e-002, -1.265063e-002, -1.279614e-002, -4.985273e-003, 1.491216e-002, 3.314718e-002, -4.231224e-003, -2.268554e-002, -2.132757e-002, -4.476700e-002, -4.342582e-003, -2.735374e-002, 1.592465e-002, 4.876301e-002, 5.333239e-002, 6.632984e-002, 6.939200e-002, 8.032507e-002, 8.222998e-002, 2.320237e-002, 8.847407e-003, -1.422217e-002, -3.934549e-002, -4.039494e-002, -2.121276e-002, -3.704012e-003, 7.341020e-004, 1.523212e-002, 3.399473e-002, 4.463463e-002, 7.925956e-003, -1.520147e-002, -1.157716e-002, -6.736919e-003, -1.308826e-002, -1.242429e-002, 3.448417e-002, 4.930864e-002, 3.900712e-002, 2.993415e-002, 2.040517e-002, -8.150412e-003, 4.617916e-002, 9.259477e-002, 4.095021e-002, -2.334140e-002, -2.345884e-002, -2.672372e-002, -1.820795e-002, -6.252336e-003, 2.091644e-003, 1.626391e-002, 1.963724e-002, 2.543796e-002, 1.148998e-002, 2.623236e-002, 3.607339e-002, 2.455201e-002, 5.891302e-003, 1.626708e-002, 1.912105e-002, -1.202306e-002, -2.286688e-002, 4.620172e-003, 1.756304e-002, -2.537225e-002, -1.033947e-002, 6.377986e-002, 6.269712e-002, 1.330727e-002, 3.918522e-003, 4.094702e-003, -1.703225e-002, -2.309911e-002, -1.780960e-002, -1.509644e-002, -1.468569e-002, -2.330905e-003, 1.893902e-002, 3.307625e-002, 3.982870e-002, -2.158693e-002, 3.009272e-002, 4.461459e-002, 5.224931e-002, 5.256839e-002, 6.622570e-002, 9.982929e-002, 1.230004e-001, 8.694104e-002, 7.214631e-002, 7.600197e-002, 7.561797e-002, 5.824667e-002, 4.100779e-002, 3.017124e-002, -2.985562e-003, -3.075750e-002, -3.941240e-002, -4.804793e-002, -4.213165e-002, -2.384344e-002, 7.672580e-003, -1.599885e-002, -4.890790e-002, -1.139371e-001},
{1.672567e-001, 1.385565e-001, 1.256633e-001, 1.468705e-001, 1.723959e-001, 1.771608e-001, 1.478867e-001, 1.154792e-001, 9.759836e-002, 8.458215e-002, 9.279177e-002, 8.431381e-002, 6.312650e-002, 5.822940e-002, 7.500696e-002, 1.105440e-001, 1.383170e-001, 1.475938e-001, 1.127871e-001, 1.008882e-001, 8.779940e-002, 3.710330e-002, -1.435072e-002, 9.546074e-002, 3.779969e-002, -2.361586e-002, -4.972816e-002, -3.265185e-002, 1.457128e-002, 5.233838e-002, 3.533664e-002, -4.116273e-003, -2.386596e-002, -3.292309e-002, -2.526181e-002, -2.326233e-002, -2.983367e-002, -3.664601e-002, -2.992173e-002, -4.649134e-003, 3.109520e-002, 4.864254e-002, 3.210096e-002, 2.437641e-002, 4.198799e-002, 1.822293e-002, -3.486212e-002, 3.570932e-002, 1.545612e-001, 4.339421e-002, -6.127992e-002, -1.048060e-001, -7.484760e-002, -2.969463e-002, -4.396849e-002, -6.842722e-002, -5.374253e-002, -2.353864e-003, 3.756228e-002, 5.609247e-002, 4.800388e-002, 3.880541e-002, 3.459382e-002, 4.226154e-002, 5.402584e-002, 4.656028e-002, -5.142632e-003, -2.863455e-002, 4.908151e-004, 1.091766e-002, -6.722656e-003, -7.712958e-003, 1.397536e-001, 8.135891e-002, 8.960490e-003, -3.659837e-002, -1.997632e-002, 9.684590e-003, -1.231174e-002, -3.173463e-002, 1.942856e-002, 6.433273e-002, 3.523683e-002, -1.051361e-002, -3.630505e-002, -1.850568e-002, 2.801039e-002, 5.969297e-002, 5.296239e-002, 4.772604e-002, 5.003734e-002, 1.979548e-003, -7.446546e-004, 1.173383e-002, 3.175135e-002, -1.337375e-002, 9.700389e-002, 3.288515e-002, -3.122777e-002, -5.134556e-002, -6.456895e-003, 1.729747e-002, -1.496640e-002, -2.723983e-002, 2.561974e-002, 2.787683e-002, 1.180705e-002, 2.346792e-002, 2.940821e-002, 3.371257e-002, 6.682587e-002, 7.308601e-002, 2.287449e-002, -5.962711e-002, -4.373031e-002, 3.456080e-002, 4.803908e-002, 9.962547e-003, 4.253164e-002, -1.940994e-003,


© ISO/IEC 2004 — All rights reserved

Copyright International Organization for Standardization
Provided by IHS under license with ISO
No reproduction or networking permitted without license from IHS
Not for Resale

8.872797e-002, 6.366220e-002, 1.658428e-003, -4.101554e-002, -1.082324e-002, 1.645366e-002, -2.684703e-002, -3.065416e-002, 1.021946e-002, 1.895181e-002, 2.027819e-002, 1.805496e-002, -1.574627e-002, -4.748457e-002, -2.069937e-002, 3.221446e-002, 2.196303e-002, -6.122881e-002, -1.227671e-001, -2.472029e-002, 4.083848e-002, -2.255395e-002, 1.774601e-002, -8.400002e-003, 3.094561e-002, 7.062695e-003, -1.525303e-002, -1.017287e-002, -1.235647e-002, 4.988978e-002, 6.645463e-002, 3.096913e-002, 1.699939e-003, -1.312652e-002, -3.699504e-002, -1.098171e-002, 2.904758e-002, 1.207557e-002, 1.733647e-002, 3.763472e-002, 2.051318e-002, -2.984475e-002, -9.257364e-002, -4.004356e-002, 1.712037e-002, -5.501621e-002, -2.031489e-002, -8.753859e-003, -1.093714e-001, -6.093514e-002, -2.173526e-002, 1.236089e-002, -7.994479e-002, -5.501656e-002, -4.046146e-002, -4.683634e-002, -5.974040e-002, 4.347805e-003, 2.851520e-002, -1.005600e-002, 3.951625e-002, -1.061780e-002, -1.877304e-002, 1.667321e-002, 3.160484e-002, 3.134313e-002, -1.161836e-002, -1.590784e-002, 3.531586e-002, -1.223605e-002, 3.516874e-003, 4.510746e-002, -3.591940e-002, 1.411880e-002, 4.396118e-002, 8.553018e-002, -3.504304e-002, -9.844933e-003, -1.659965e-002, -2.123820e-002, 5.941447e-003, 6.321188e-002, 7.810195e-002, 1.205234e-002, 1.533067e-002, 6.231865e-002, 5.288703e-002, -5.935675e-002, -1.045463e-002, 1.004077e-001, 7.403342e-002, -1.113871e-002, -3.094080e-002, 5.036889e-004, -1.182061e-002, 6.323226e-002, 5.667877e-002, 2.695149e-002, 4.000474e-002, 7.006468e-002, 1.836383e-002, 3.351189e-002, -1.367751e-002, -2.150668e-002, 2.435160e-002, 3.510898e-002, -2.053510e-003, -1.923032e-002, -1.462428e-003, 5.009404e-002, 9.063652e-002, 3.335927e-002, -3.401392e-002, -5.156017e-003, 2.669857e-002, -2.268987e-002, -7.413027e-002, 1.603221e-002, -3.107498e-002, 2.261051e-002, 1.124643e-002, -1.595314e-002, 1.438093e-002, 4.080332e-002, 7.132466e-002, 5.397830e-002, 3.630509e-003, -8.585356e-003, 1.657391e-002, 3.681570e-002, -3.479622e-002, -3.417427e-002, -8.971475e-004, 2.961131e-002, 5.870598e-002, 3.340752e-002, -3.969877e-002, -1.487388e-002, 3.427486e-002, 3.083591e-002, -3.862672e-002, 2.392738e-002, -4.374399e-002, 2.901470e-004, -8.738094e-003, -7.603809e-003, 4.691314e-003, 3.264717e-002, 7.047141e-002, 6.605465e-002, 4.363754e-002, 3.435042e-002, 2.128690e-002, 6.033394e-002, -3.392740e-002, -7.300484e-002, -3.437075e-002, 8.667738e-003, 3.640920e-002, 1.886011e-002, -3.560640e-002, -2.964948e-002, 1.930340e-002, 4.199450e-002, -5.118393e-003, 2.613879e-002, -3.136982e-002, -3.655336e-003, -8.853492e-003, -1.667630e-002, -2.192677e-002, 1.294177e-002, 4.121571e-002, 6.972786e-002, 6.741909e-002, 5.355569e-002, 1.321618e-002, 4.809883e-002, 2.029601e-002, -6.979824e-002, -7.269715e-002, -2.627785e-002, 7.208967e-003, -5.061919e-003, -4.525622e-002, -5.367318e-002, -1.105021e-002, 2.337243e-002, 2.188268e-003, 3.973272e-003, -8.551222e-003, -1.670429e-002, -1.888625e-002, -3.915210e-002, -3.392211e-002, -2.550022e-002, 1.415995e-002, 6.776713e-002, 4.763682e-002, 3.069098e-002, -5.767423e-003, -6.464883e-003, 4.249864e-002, -2.203270e-002, -5.370751e-002, -4.223952e-002, -1.971051e-002, -2.151445e-002, -4.725326e-002, -6.019026e-002, -2.997523e-002, -1.688282e-003, -1.017922e-002, -1.988102e-002, -3.203599e-004, -2.613621e-002, -5.273210e-002, -2.939158e-002, -3.208329e-002, -4.500734e-002, 1.421441e-002, 5.901501e-002, 5.655714e-003, -3.350000e-002, -3.972291e-002, -4.054122e-002, -1.641171e-002, -6.870517e-003, -2.807581e-002, -3.346873e-002, -2.651045e-002, -2.707306e-002, -4.892104e-002, -6.159139e-002, -4.435572e-002, -2.282417e-002, -1.093134e-002, -2.992512e-002, -2.207598e-002, -3.778352e-002, -4.720319e-002, -3.167233e-003, -2.961032e-002, -3.567058e-002, 1.975638e-002, 2.502510e-002, -6.773265e-003, -8.653100e-003, -6.146340e-003, -3.310535e-002, -2.451335e-002, -3.604841e-002, -4.906176e-002, -3.256100e-002, -1.691654e-002, -1.521215e-002, -1.869048e-002, -2.713571e-002, -3.476124e-002, -2.213651e-002, -8.336843e-003, -1.704238e-002, -3.652703e-002, -3.108197e-002, -4.917048e-002, -1.901838e-002, -7.037936e-002, -4.877526e-002, -1.699885e-002, -1.070887e-002, 2.067124e-002, 7.084654e-002, 4.161323e-002, -4.261459e-002, -1.056576e-002, -1.878949e-002, -6.259198e-002, -3.627214e-002, 2.907294e-003, 1.988917e-002, 2.129143e-002, -2.439041e-004, -2.474666e-002, -6.624516e-003, 9.765367e-003, 1.827991e-002, -2.533716e-003, 2.439099e-003, -4.032188e-002, -1.182665e-002, -1.815142e-002, 1.362981e-002, 7.349894e-003, -3.584344e-003, 6.241887e-003, 3.652976e-002, 3.711515e-003, -7.056339e-002, -2.582824e-002, 9.386489e-003, -3.991146e-002, -3.567457e-002, 7.731530e-003, 3.608331e-002, 3.783908e-002, 1.037560e-002, -1.465870e-002, 5.087626e-003, 1.882201e-002, 4.769632e-002, 4.160439e-002, 1.879835e-002, -2.106316e-002, 2.993244e-002, 8.422994e-002, 7.861893e-002, -2.477635e-002, -5.209555e-002, -5.789943e-002, -4.108464e-002, 1.686294e-002, -4.205542e-004, -4.570227e-003, 1.008887e-002, -6.871778e-003, -1.389208e-002, 1.317212e-002, 4.311280e-002, 3.828829e-002, 5.576129e-003, -1.275377e-002, 1.224655e-002, 1.242783e-002, 4.068058e-002, 3.105554e-002, -6.049734e-003, -1.984044e-002, 2.465266e-002, 6.534498e-002, 2.589983e-002, -4.494048e-002, -2.668160e-002, -1.483467e-002, -4.248076e-002, 1.504419e-002, 3.902034e-002, 1.480132e-002, -7.670288e-003, -3.437522e-003, 8.226614e-003, 1.464388e-002, 4.031773e-002, 3.127834e-002, -2.907103e-004, -8.700071e-003, 1.116085e-002, -1.564730e-002, -3.718628e-003, -9.864554e-003, -2.265917e-003, -2.916131e-002, -2.421935e-002, -1.822549e-002, -2.052236e-002, -3.232715e-002, 1.473813e-002, 1.438686e-002, -6.654107e-002, -4.608723e-002, -2.266318e-002, -2.712870e-002, -2.893559e-002, -2.248422e-002, 6.028282e-003, 2.495199e-002, 3.282964e-002, 1.695079e-002, -9.206484e-003, -3.316665e-003, -2.694342e-003, -3.994555e-002, -3.680385e-002, -2.433331e-002, 2.660596e-002},

© ISO/IEC 2004 — All rights reserved


--`,,```,,,,````-`-`,,`,,`,`,,`---
Copyright International Organization for Standardization
Provided by IHS under license with ISO
No reproduction or networking permitted without license from IHS
Not for Resale

{-9.487316e-002, -6.928398e-002, -5.039471e-002, -4.193678e-002, -4.101897e-002, -2.765109e-002, -6.939497e-003, 9.805717e-003, 1.071816e-002, -2.127410e-003, -3.394457e-002, -7.151491e-002, -7.165485e-002, -3.786398e-002, -1.966622e-003, 1.534132e-002, 1.281524e-002, -3.930842e-003, 6.110590e-003, 2.189264e-003, 6.986645e-003, 1.691097e-002, -8.476871e-003, -7.637787e-002, -4.909270e-002, -1.347169e-002, 1.507106e-002, 2.836630e-002, 2.041820e-002, 1.490023e-002, 2.380313e-002, 3.535833e-002, 2.412637e-002, 9.567403e-003, -1.271391e-002, -3.812523e-002, -2.994534e-002, -1.629229e-003, 2.788746e-002, 3.791679e-002, 3.448170e-002, 3.026695e-003, 2.499169e-003, -5.653428e-003, -1.418937e-002, -1.096922e-002, -1.551556e-003, -3.102875e-002, -7.044105e-002, -2.288910e-002, 4.245397e-002, 8.030799e-002, 6.599701e-002, 4.080703e-002, 3.230550e-002, 4.282117e-002, 1.902648e-002, -1.072795e-002, -3.074623e-002, -3.388243e-002, -5.758363e-003, 1.558444e-002, 2.108186e-002, 1.680684e-002, 1.252415e-004, -2.867025e-002, -2.102352e-002, -1.046432e-002, -2.835475e-002, -3.750810e-002, -1.195064e-002, 1.710922e-002, -1.110265e-001, -7.595722e-002, -3.695435e-003, 6.632328e-002, 7.277436e-002, 4.480182e-002, 4.406830e-002, 5.531031e-002, 3.528910e-002, -1.430590e-002, -3.295085e-002, -2.392478e-002, 2.707991e-003, 1.990721e-002, 7.448061e-003, -1.806355e-002, -4.854526e-002, -6.685091e-002, -5.934390e-002, -3.212296e-002, -2.542842e-002, -4.038622e-002, -2.141753e-002, 4.594577e-002, -1.013363e-001, -6.717742e-002, -8.841453e-003, 4.944219e-002, 4.526218e-002, 2.203180e-002, 3.745314e-002, 6.979302e-002, 6.385308e-002, 1.468177e-002, -4.556838e-002, -6.071387e-002, -3.030865e-002, 4.998247e-003, 1.153665e-002, -1.901361e-002, -6.626201e-002, -8.673763e-002, -5.248171e-002, -5.793736e-002, -2.745480e-002, -1.030270e-002, -2.533295e-002, 3.165582e-002, -9.025324e-002, -3.294399e-002, 3.235282e-002, 7.941048e-002, 4.549216e-002, -1.008296e-002, 2.819747e-004, 4.736405e-002, 7.153784e-002, 1.488020e-002, -4.580929e-002, -6.886978e-002, -4.270180e-002, -1.049592e-002, -2.068361e-002, -3.820814e-002, -5.032939e-002, -4.940525e-002, 9.690415e-005, -2.902674e-002, -2.612833e-002, 1.714062e-002, -1.313883e-002, 2.508349e-003, -1.339198e-001, -9.426396e-002, -2.151387e-002, 4.668365e-002, 4.718166e-002, -1.171386e-002, -1.625530e-002, 1.683220e-002, 2.496493e-002, -1.793373e-002, -4.127954e-002, -6.465836e-002, -5.709337e-002, -4.349026e-002, -6.619271e-002, -9.927976e-002, -1.077453e-001, -5.204079e-002, 3.775982e-002, 2.666098e-002, -8.536758e-004, 5.415544e-002, 2.455992e-002, -1.064866e-002, 6.690634e-002, -2.044013e-002, -9.385852e-002, -7.112876e-002, 2.056655e-002, 1.444347e-002, 1.382790e-002, 1.433361e-002, -3.821216e-002, -6.188074e-002, -5.909097e-002, 3.756629e-003, 4.591224e-002, 1.499653e-002, -4.613042e-002, -4.945393e-002, -2.335141e-002, -3.340766e-002, 6.354904e-003, 1.888672e-002, 2.301064e-002, 6.943597e-002, 6.135645e-002, 1.008405e-002, 7.350722e-002, 6.867919e-002, -7.959419e-002, -1.050137e-001, -9.836296e-003, -5.109528e-002, -5.021515e-002, -3.388580e-002, -5.455635e-002, -7.692373e-002, -6.474681e-002, 2.706536e-002, 3.227915e-002, 3.354119e-003, -5.474850e-002, -1.010928e-001, -2.914588e-002, 3.579274e-003, 2.021332e-003, -3.266568e-002, -8.129038e-004, 8.871685e-003, 1.515999e-002, -4.680536e-003, 2.660880e-002, 2.506112e-002, -3.667544e-002, -3.239044e-002, 3.784549e-002, -3.353815e-002, -2.917322e-002, -1.097613e-002, -1.572732e-002, -4.310605e-002, -7.289701e-002, -4.905119e-002, -2.427265e-002, -4.715985e-003, -2.060839e-002, -4.258627e-002, -5.279091e-002, -1.470931e-002, 4.001400e-002, 1.085989e-002, 2.750035e-002, -1.353913e-002, -1.535441e-002, -1.574714e-002, 3.299700e-002, 1.008925e-002, -2.596134e-002, 3.695580e-002, 5.331186e-002, -5.769074e-003, 7.911186e-003, 1.977020e-002, 2.715816e-002, 1.136854e-002, -7.003309e-002, -5.289123e-002, -2.210418e-002, -1.121482e-002, -7.165437e-003, 3.096148e-003, -1.209770e-002, -3.697814e-003, 4.215284e-002, 4.211965e-002, 4.174710e-002, -7.848220e-003, -5.941221e-003, -8.206282e-003, 1.021767e-002, -1.292759e-002, -1.201931e-002, 6.435774e-002, 4.082984e-002, 7.639986e-003, 2.358110e-002, 2.529569e-002, 3.476878e-002, 8.024718e-002, -1.367252e-002, -3.368126e-002, 2.423353e-003, 2.022478e-002, 3.599623e-002, 4.751188e-002, 1.876412e-002, -6.518924e-003, 6.205530e-003, 1.199492e-002, 1.403075e-002, -3.894775e-003, -6.440912e-003, 6.894476e-003, -6.014358e-003, -1.963980e-002, 2.202957e-002, 5.013960e-002, 2.379963e-002, 1.424904e-002, 3.739775e-002, 3.098488e-002, 7.211913e-003, 9.192916e-002, 6.531714e-002, -8.371079e-003, 5.031241e-003, 4.209132e-002, 5.949410e-002, 6.149577e-002, 2.756905e-002, -2.129621e-002, -4.104427e-002, -3.084236e-002, -7.700212e-003, -1.824513e-002, -2.138845e-002, 1.290420e-002, 4.213078e-002, 5.641645e-002, 2.325349e-002, 1.578497e-002, 9.327626e-003, 4.234978e-003, 3.992620e-002, 2.993923e-002, -3.589341e-002, 3.086269e-002, 9.945420e-002, 5.160724e-002, 2.480574e-002, 4.120780e-002, 6.107152e-002, 6.220244e-002, 2.760490e-002, -2.695327e-002, -4.386651e-002, -3.548725e-002, -1.339118e-002, -1.852300e-002, -3.309028e-002, -4.757818e-003, 1.352496e-001, 5.287204e-002, -5.199604e-002, 3.326123e-004, 5.445414e-003, 7.320476e-003, 5.895842e-002, 4.813426e-002, -3.402165e-002, -1.348615e-002, 3.673405e-002, 4.587085e-002, 5.558708e-002, 7.116031e-002, 9.081217e-002, 8.396576e-002, 4.337932e-002, -4.302506e-004, -5.182024e-003, -6.122358e-003, -9.929401e-003, -2.597627e-002, -3.561538e-002, -2.393570e-002, 1.410667e-001, -2.070027e-002, -8.487113e-002, 4.770930e-002, 4.310583e-002, 2.764622e-002, 4.620037e-002, 4.227683e-002, -1.157232e-002, -1.730048e-002, 2.448865e-002, -6.212076e-003, 1.013318e-002, 5.708669e-002, 8.679631e-002, 8.390765e-002, 6.010347e-002, 4.994947e-002, 4.850451e-002, 2.041465e-002, -9.046323e-003, -1.644188e-002, -8.850082e-003, -1.947168e-002,


--`,,```,,,,````-`-`,,`,,`,`,,`---
© ISO/IEC 2004 — All rights reserved

Copyright International Organization for Standardization
Provided by IHS under license with ISO
No reproduction or networking permitted without license from IHS
Not for Resale

1.297470e-001, -2.562912e-002, -5.163376e-002, 3.906533e-002, 3.025945e-002, 4.954371e-003, -2.009657e-002, -6.467875e-004, 1.799339e-002, -2.620751e-002, 2.812677e-002, 2.614871e-002, -6.257520e-003, 1.859467e-002, 5.436029e-002, 7.186897e-002, 6.578740e-002, 6.787257e-002, 7.066063e-002, 3.008283e-002, 4.302011e-003, 6.586534e-003, 2.810530e-002, -1.544456e-002, 1.345973e-001, 2.638205e-002, -2.262407e-002, 1.766239e-002, 2.775908e-002, -2.000271e-002, -4.687653e-002, -1.404691e-002, 7.101344e-002, 5.045385e-003, 1.121160e-002, 8.559309e-002, 6.896418e-002, 2.881381e-002, 3.584116e-002, 4.572451e-002, 5.533169e-002, 6.790932e-002, 6.831035e-002, 2.810426e-002, 1.880632e-002, 2.395490e-002, 5.256917e-002, -2.205772e-002, 1.042978e-001, 5.232049e-002, 4.434193e-003, -3.453899e-003, -2.253706e-002, -2.620017e-002, -1.285705e-002, -2.814016e-002, -2.257720e-002, -1.545766e-002, 8.136586e-003, 7.515254e-002, 1.085402e-001, 4.670934e-002, 2.615476e-003, -4.154029e-003, 1.280063e-002, 4.166566e-002, 4.518605e-002, 1.298065e-002, 1.738214e-002, 1.788645e-002, 3.810121e-002, -2.310762e-002, 9.949030e-003, -4.371595e-003, 2.602879e-002, 5.055605e-002, 3.238132e-002, 1.947861e-002, 2.904391e-002, 1.538725e-002, 1.152331e-002, 2.501886e-002, 8.344884e-003, -1.257344e-002, 1.623082e-002, 1.837845e-002, -4.313987e-002, -6.340026e-002, -3.275589e-002, 8.725016e-003, 1.526807e-002, -6.510526e-003, 4.621113e-003, -2.962912e-002, 1.797417e-002, 3.236801e-002, -1.126138e-001, -1.125190e-001, -7.622773e-002, -4.466381e-002, -4.899578e-002, -5.197778e-002, -2.619571e-002, -2.709894e-002, -4.025827e-002, -5.225251e-002, -8.506527e-002, -1.191275e-001, -1.176938e-001, -8.298047e-002, -9.658996e-002, -1.043842e-001, -5.982585e-002, -1.314548e-002, -1.062510e-002, -1.603442e-002, -1.547612e-002, -6.252805e-002, 3.977976e-002, 1.070678e-001},
{1.723936e-002, 7.019234e-002, 1.125363e-001, 1.434705e-001, 1.520748e-001, 1.432746e-001, 1.154673e-001, 9.096848e-002, 8.101310e-002, 8.284135e-002, 8.735305e-002, 7.467735e-002, 5.258408e-002, 1.829743e-002, -6.689248e-003, -6.779500e-003, 2.086319e-002, 6.997699e-002, 6.764804e-002, 2.052562e-002, 2.067599e-002, 3.529474e-003, 1.483778e-002, 1.121231e-002, -1.292186e-001, -6.949466e-002, 1.740925e-003, 5.476409e-002, 8.037625e-002, 7.896408e-002, 5.529943e-002, 2.636837e-002, 5.352077e-003, -1.311718e-002, -2.684619e-002, -4.753921e-002, -5.863554e-002, -6.934849e-002, -7.311353e-002, -6.008466e-002, -3.547141e-002, 1.466849e-003, 1.308438e-002, -5.405118e-003, 5.818093e-003, -7.527179e-003, -5.712319e-003, -2.755126e-003, -8.096335e-002, -6.599680e-002, -3.011877e-002, 4.331379e-003, 4.439611e-002, 6.029000e-002, 4.250210e-002, 1.562144e-002, -2.632071e-003, -1.759825e-002, -2.647362e-002, -2.522088e-002, -7.208395e-003, 2.169881e-002, 2.216769e-002, -5.304414e-003, -2.316213e-002, -3.198786e-002, -6.070513e-002, -5.957591e-002, -9.600539e-003, -1.532133e-002, -1.000237e-002, -1.306140e-002, -5.587993e-002, -5.425437e-002, -3.368977e-002, -7.086543e-003, 3.492586e-002, 6.183593e-002, 5.985226e-002, 3.273192e-002, 1.145555e-002, -3.074616e-002, -4.743900e-002, -1.928978e-002, 1.908296e-002, 3.294873e-002, -1.997753e-002, -8.847138e-002, -1.050414e-001, -5.673313e-002, -5.395423e-002, -7.920668e-002, -9.775469e-003, -4.774792e-003, 4.971218e-003, -4.424219e-003, -3.085572e-002, -5.496646e-002, -5.404368e-002, -4.577264e-002, -1.356616e-002, 2.812170e-002, 3.023328e-002, 2.969550e-004, -5.728717e-002, -1.263359e-001, -1.043745e-001, -1.243373e-002, 5.583316e-002, 4.874947e-002, -2.621309e-003, -5.301123e-002, -7.682672e-002, -3.683674e-002, 1.481598e-002, 4.202798e-003, 2.206263e-002, 5.130760e-003, 2.697070e-002, 1.753259e-002, 3.604429e-002, 2.952062e-002, 2.153934e-002, -3.382643e-004, -6.935615e-003, 1.815117e-002, 6.559452e-003, -2.157956e-002, -7.248166e-002, -9.188606e-002, -3.267564e-002, 6.992739e-004, 1.051216e-002, 5.756133e-003, -1.671273e-003, -1.459883e-002, -3.793652e-002, -2.961520e-002, 1.796245e-002, 5.526191e-002, 5.253940e-002, -1.925789e-002, 1.857306e-002, 1.353624e-002, 6.608537e-002, 6.187080e-002, 5.499666e-002, 1.867826e-002, 5.380617e-004, -1.805000e-003, 1.400376e-002, 6.338856e-003, 1.036564e-002, -2.286552e-003, 6.768413e-004, 1.300017e-002, 1.635275e-002, 1.169951e-002, 2.704412e-002, 2.705303e-002, 7.270445e-003, -1.673140e-002, -3.055584e-002, 4.626113e-003, 1.799919e-002, -4.373622e-002, -4.757586e-003, -1.774630e-002, 2.528334e-002, 5.849267e-002, 9.146741e-003, -5.271122e-002, -5.083751e-002, -6.462139e-002, -3.125205e-002, -5.533746e-003, 3.215457e-002, -2.119318e-002, 1.194257e-002, 8.849224e-002, 3.346543e-002, 5.550639e-004, -1.980169e-002, -2.691220e-003, 1.420687e-002, -1.444135e-002, -1.771023e-002, 1.963339e-002, -2.097908e-002, -4.628080e-002, -2.855161e-002, -4.694186e-002, -1.223422e-001, -7.376649e-002, -5.033005e-002, -9.223094e-002, -3.279800e-002, -6.298888e-002, -6.357711e-002, -7.386004e-002, -1.892482e-002, -8.544661e-002, -2.947427e-002, 4.454549e-002, -1.830558e-002, -5.899497e-003, 3.186501e-002, 6.570623e-002, 1.743420e-002, -5.159591e-003, -2.056478e-002, 4.194817e-002, -1.716072e-002, 9.181078e-003, -2.887471e-002, -3.113390e-002, -1.043245e-002, 2.718323e-002, 1.765347e-002, -3.025542e-002, -1.798975e-002, -8.201661e-002, -8.729229e-002, -1.255779e-001, -6.792994e-002, -6.830999e-002, -1.895353e-002, 2.759751e-003, -2.618235e-002, -1.565762e-002, -1.956958e-006, 1.222844e-002, 7.305093e-002, 2.544927e-002, -4.824372e-002, -3.549027e-003, -4.808334e-002, 2.439403e-002, 2.544506e-003, -1.443683e-002, -1.893762e-002, 1.529429e-002, 1.076408e-002, -3.032992e-003, -5.435656e-002, -9.146384e-002, -8.101770e-002, -1.232219e-001, -9.569543e-002, -6.784749e-002, -2.621107e-002, -6.775179e-003, -2.703075e-002, -4.491928e-002, -4.179232e-002, -1.692082e-002, 4.060018e-002, 2.707256e-002, -3.061681e-002, -1.364785e-002, -4.162306e-002, 3.821432e-002, 3.538133e-002, 6.665472e-004, -

© ISO/IEC 2004 — All rights reserved


Copyright International Organization for Standardization
Provided by IHS under license with ISO
No reproduction or networking permitted without license from IHS
Not for Resale

7.436867e-002, -5.553537e-002, -5.328228e-002, -1.588325e-002, -7.968151e-002, -6.101149e-002, -3.203360e-002, -7.265483e-002, -8.204151e-002, -5.587341e-002, -3.341552e-002, -1.204310e-003, -7.231077e-003, -4.099931e-002, -4.720276e-002, -2.602692e-002, 2.459937e-002, 2.117851e-002, -1.949843e-002, -9.116940e-003, -1.661993e-002, 1.627271e-002, 3.470569e-002, -9.778037e-003, -1.338727e-001, -1.449977e-001, -7.206332e-002, -3.149501e-002, -5.542503e-002, -1.412378e-002, 2.695574e-002, -3.403279e-003, -4.589545e-002, -1.499197e-002, -2.064037e-002, -1.122212e-003, 1.263910e-002, 3.570823e-003, -1.296521e-002, 3.262045e-004, 3.117701e-002, 1.488657e-002, -3.113791e-002, -7.651173e-003, 4.947965e-003, 1.016421e-003, 2.123446e-002, -3.723865e-002, -1.813727e-001, -1.109136e-001, -7.812734e-003, -2.977823e-002, -3.224497e-003, 3.007426e-002, 5.596921e-002, 5.941720e-002, 2.464141e-003, 2.053876e-002, 1.918931e-002, -1.111690e-002, 5.378233e-003, 2.456346e-002, 2.604632e-002, 2.422355e-002, 1.880537e-002, -1.926185e-002, -3.179481e-002, -2.892918e-004, 8.678797e-003, -1.204695e-002, 1.937207e-002, -1.395950e-002, -9.864642e-002, 2.296245e-002, 2.097313e-002, -7.253937e-003, 5.274361e-002, 5.067541e-002, 4.985080e-002, 8.062823e-002, 5.507867e-002, 1.916905e-003, 2.720685e-002, -2.355881e-003, -2.573946e-002, -2.505101e-002, -2.317744e-002, -2.026302e-002, -1.982151e-002, -3.118577e-002, -3.620178e-002, 1.237381e-002, 6.724640e-003, -1.299967e-002, 1.067232e-002, 1.332677e-002, 2.886566e-002, 6.359554e-002, 3.023465e-005, 7.321004e-003, 4.906818e-002, 1.226301e-002, 1.783199e-002, 7.268144e-002, 9.668192e-002, -2.174885e-002, -2.057190e-002, -5.039255e-003, -2.222021e-002, -1.493261e-002, -1.576599e-003, 3.145572e-003, 4.128425e-003, -7.114846e-003, -1.027840e-002, 2.347717e-002, 2.724967e-003, -9.372410e-003, 3.465812e-003, 1.841304e-002, 4.127549e-002, 2.081570e-002, 1.852515e-003, 2.034355e-002, 4.805065e-002, 3.247574e-002, 5.270817e-002, 8.514358e-002, 1.167666e-001, -3.893356e-003, -3.348834e-002, 1.916269e-002, -2.558005e-002, -3.338850e-002, -6.521314e-003, 2.008688e-002, 3.419590e-002, 1.277019e-002, -7.465717e-003, 1.696116e-002, -7.015085e-003, 7.674809e-004, -1.495739e-003, 1.091246e-002, 2.791620e-002, -7.853079e-003, -2.066715e-002, 2.018265e-002, 6.757689e-002, 6.727738e-002, 6.998469e-002, 4.473857e-002, -3.107493e-003, -5.051484e-002, -8.664665e-003, 9.588951e-002, 3.421634e-002, -2.228381e-002, -8.434372e-003, 2.744469e-002, 4.564223e-002, 1.604879e-002, -7.282742e-003, 1.192788e-002, -4.595051e-003, 1.602393e-002, -1.823002e-002, -5.202714e-003, 4.309543e-002, 8.103910e-004, -2.587940e-002, 7.728419e-002, 1.064630e-001, 3.619265e-002, 3.258397e-003, 1.908476e-003, 1.384693e-002, -3.020192e-002, -9.422610e-003, 9.853051e-002, 9.862360e-002, 4.384169e-003, -1.403694e-002, 2.091362e-002, 4.196126e-002, 1.045597e-002, -2.161117e-003, 8.421266e-003, 5.734074e-003, 2.005450e-002, -3.005182e-002, -6.177063e-003, 5.099093e-002, -8.758796e-003, -3.979931e-002, 2.268014e-002, 6.494342e-002, 2.344429e-002, -1.460448e-002, -2.516472e-002, 4.130890e-002, 5.310814e-002, 3.073528e-002, 4.669626e-002, 6.902798e-002, 2.763630e-002, -2.016584e-002, 6.621934e-004, 1.848697e-002, -2.616438e-003, -6.193225e-003, -4.769345e-003, 1.327680e-002, 1.755451e-002, -2.098174e-002, 1.542996e-002, 4.125927e-002, 2.613189e-003, -5.233197e-003, 2.252976e-002, 5.227394e-002, 4.175952e-002, 2.275986e-002, 5.546887e-003, 3.827631e-002, 6.623147e-002, 5.027745e-002, 3.074800e-002, 1.915070e-002, 1.228549e-002, -2.204414e-002, -2.138800e-002, -1.093114e-002, -2.189956e-002, -1.769231e-002, -1.189167e-002, 2.413061e-002, 1.173470e-002, 3.287377e-003, 6.281332e-002},
{-9.897240e-002, -4.871259e-002, -3.711749e-003, 7.025564e-003, -5.751539e-003, -1.554421e-002, -9.162821e-003, 1.135689e-002, 3.123672e-002, 3.935782e-002, 4.742112e-002, 6.581159e-002, 6.501137e-002, 4.449050e-002, 2.263647e-002, 1.119757e-003, -9.660456e-003, -1.060428e-002, -3.688953e-002, -6.182713e-002, -7.224337e-002, -8.079684e-002, -7.974058e-002, -7.128739e-002, -8.494113e-002, 1.935998e-004, 7.502079e-002, 8.138276e-002, 5.088006e-002, 1.738560e-002, 1.654662e-002, 3.303643e-002, 4.341198e-002, 3.780171e-002, 2.271977e-002, 1.720688e-002, 7.068705e-003, -1.796139e-002, -3.517043e-002, -4.807210e-002, -5.766129e-002, -3.582589e-002, -2.425457e-002, -1.654697e-002, 2.552412e-003, -1.100809e-002, -6.079896e-003, -1.533429e-002, -8.828914e-002, 1.913227e-002, 1.040874e-001, 1.088741e-001, 6.600373e-002, 2.396489e-002, 2.410663e-002, 3.237092e-002, 2.552588e-002, 1.624076e-002, 1.655680e-002, 2.061143e-002, 2.302329e-002, 1.323784e-002, 1.707412e-003, -2.276457e-002, -5.736832e-002, -5.375759e-002, -3.694583e-002, 1.194199e-003, 5.642300e-002, 4.293897e-002, 4.989399e-002, 4.456229e-002, -9.322927e-002, -1.702891e-002, 5.150973e-002, 6.041086e-002, 1.199652e-002, -2.381907e-002, -1.382871e-002, 3.685445e-003, -6.072532e-003, 1.744068e-004, 1.649002e-002, 1.547886e-002, 2.977727e-003, -2.298301e-003, -2.047384e-003, -4.899582e-004, -1.924405e-002, -8.911135e-003, -1.810281e-002, -9.170075e-003, 4.541765e-002, 4.769996e-002, 6.239358e-002, 6.049204e-002, -1.685266e-002, 2.193462e-002, 4.875383e-002, 4.786422e-002, 1.908001e-003, -1.405111e-002, 6.814355e-003, 4.391838e-002, 4.288842e-002, 5.657161e-002, 5.297831e-002, 1.708029e-002, -6.931842e-003, -3.192693e-003, -1.574038e-002, -2.039926e-002, -1.541705e-002, 3.047372e-002, 4.929287e-002, -5.567252e-003, -1.178482e-002, -6.622766e-003, 2.117053e-002, 1.229872e-002, 1.438549e-002, 1.739343e-002, 1.249383e-002, 1.493342e-002, 1.632927e-002, 1.693300e-002, 3.924648e-002, 6.956403e-002, 3.083606e-002, -2.249959e-004, -4.636222e-004, 1.696149e-002, 1.567248e-002, 1.085996e-002, 1.696008e-002, -4.414580e-003, -2.787654e-002, -5.437652e-003, 3.149684e-002, -8.692180e-004, -3.336997e-002, -3.803683e-002, -2.946864e-002, -3.801398e-002,


© ISO/IEC 2004 — All rights reserved

Copyright International Organization for Standardization
Provided by IHS under license with ISO
No reproduction or networking permitted without license from IHS
Not for Resale

2.889993e-003, 2.364845e-002, 4.236588e-002, 1.585500e-002, 5.331670e-002, 5.632495e-002, 4.416629e-002, 4.670382e-002, 1.361524e-003, -1.270433e-002, 3.961438e-002, 8.773064e-002, 1.140019e-003, -5.316440e-002, -1.087865e-002, -6.253502e-003, -9.769104e-003, 9.104379e-003, 4.522027e-002, 1.850784e-002, -2.137580e-002, -2.971273e-002, -4.573484e-002, -2.881361e-002, -3.776361e-002, -4.430231e-002, 1.103830e-001, 9.220225e-002, 9.464559e-002, 9.164518e-002, 6.300201e-002, 6.775302e-002, 5.518982e-002, 7.441472e-002, 5.621689e-002, 5.456561e-002, -7.103645e-002, -1.440448e-001, 3.965400e-002, 2.990265e-002, -3.978150e-002, -3.768302e-002, -4.293431e-004, 4.405075e-002, 2.377232e-002, 3.563584e-002, -1.259796e-004, 9.882402e-003, -5.343686e-002, -5.878146e-002, 1.427846e-001, 5.206891e-002, 6.086777e-002, 6.225693e-002, 2.317109e-002, 1.033394e-001, 5.865862e-002, 6.848488e-002, 1.436108e-002, -2.890993e-002, -2.841646e-002, -7.699785e-002, 2.449968e-002, 7.296724e-003, -9.078652e-003, -1.586109e-002, -3.303997e-002, 2.655936e-002, 5.023295e-002, 4.373709e-002, 1.246113e-002, -4.776480e-003, -1.501718e-001, -1.086076e-002, 1.313563e-001, -3.013700e-002, 2.555163e-002, -3.852475e-002, -8.762235e-002, 1.754608e-002, 2.332549e-002, 7.013214e-003, 3.217026e-002, -1.101135e-002, -3.862724e-002, 1.320385e-002, 1.409954e-002, -3.429943e-002, 3.652243e-002, 6.112814e-002, -8.724305e-003, 5.870605e-003, 4.536884e-002, 1.888551e-002, 9.593389e-003, 1.247925e-002, -1.310069e-001, 1.688201e-002, 8.234879e-002, -5.895444e-002, 2.459579e-002, -6.797299e-002, -1.030410e-001, -3.136892e-002, 5.890045e-003, -3.082240e-002, 6.142023e-002, 2.512886e-002, 2.786703e-003, 1.928637e-002, 2.767531e-002, 2.098695e-002, 6.274312e-002, 6.699967e-002, -1.767913e-002, -3.576699e-002, 1.517222e-002, -6.954616e-003, 3.353560e-003, 1.808088e-002, -1.275203e-001, -8.344715e-003, -1.425178e-002, -1.437050e-002, 2.773984e-002, -3.097023e-002, -6.520419e-002, -2.142278e-002, 9.993608e-003, -5.517882e-002, 4.112828e-002, 3.840666e-002, -3.156553e-002, -5.338156e-002, -4.616631e-002, -3.305405e-002, 2.340293e-002, 5.997502e-002, 1.712442e-003, -1.984725e-002, -3.212828e-003, -2.327788e-002, 1.054205e-002, 3.397045e-002, -1.156407e-001, -3.010813e-002, -7.028912e-003, 3.442285e-002, 3.281170e-002, 1.464949e-002, -2.787771e-002, 9.793110e-003, 3.360669e-002, -4.206062e-002, 9.826205e-003, 7.069338e-002, 1.671259e-002, -5.970734e-002, -8.257637e-002, -6.156830e-002, 3.010231e-003, 5.724787e-002, 4.017307e-002, -5.331720e-003, -1.921870e-002, -2.695532e-002, 4.803555e-003, 2.626501e-002, -6.491357e-002, 2.923149e-002, 3.951590e-002, 6.898068e-003, 3.597720e-002, 3.602600e-002, -1.220831e-003, 1.135224e-002, 5.599807e-002, 1.613492e-002, -3.923776e-002, 5.186922e-002, 6.130767e-002, 3.613553e-003, -4.555634e-002, -4.711503e-002, 6.576804e-003, 5.768047e-002, 5.665056e-002, -1.249053e-002, -1.982834e-002, -1.592760e-002, -1.545433e-002, 4.423152e-003, 1.461115e-003, 5.743346e-002, -3.406652e-003, -3.672566e-002, 1.304923e-002, 4.636658e-002, 2.595516e-002, 3.794157e-003, 1.623663e-002, 1.247092e-002, -1.516288e-002, 6.328783e-003, 1.993939e-002, -1.350414e-002, -4.929743e-002, -6.185431e-002, -1.959835e-002, 2.719486e-002, 1.680499e-002, -7.869955e-003, -1.960735e-003, 6.993109e-003, -1.160549e-002, 8.612763e-003, 2.264242e-002, 7.324666e-003, -3.012702e-002, -2.200499e-002, -1.636376e-002, 3.894336e-002, 5.844757e-002, 6.080626e-003, -2.234944e-002, 8.099780e-003, -7.169882e-003, 3.058642e-002, 4.955143e-002, 5.387279e-003, -4.308727e-002, -6.161291e-002, -3.487580e-002, -4.899916e-003, 1.825742e-003, 5.934900e-003, 1.698582e-002, 9.892068e-003, -1.125206e-002, 1.616664e-002, -3.018978e-002, -3.139077e-002, 1.038770e-002, 2.913874e-002, -3.179325e-003, 2.736053e-002, 6.701260e-002, 3.034175e-002, -5.249407e-003, 5.898956e-002, 3.595963e-003, -1.446578e-002, 5.686028e-002, 6.330165e-002, 1.320915e-002, -2.728995e-002, -2.703148e-002, -1.723684e-002, -1.297717e-002, 4.788284e-003, 1.370085e-002, -3.416674e-003, -2.274672e-002, -7.572194e-003, -5.596059e-002, -2.179270e-002, -7.734786e-003, -3.088938e-002, -5.007483e-002, 9.776914e-003, 3.223475e-002, -9.838402e-003, -6.491111e-002, -6.417007e-003, 2.415994e-003, -4.148799e-002, -2.243108e-002, 1.610360e-002, 3.817695e-003, -2.807380e-002, -4.206039e-002, -3.952203e-002, -2.327188e-002, 3.058398e-003, -2.802069e-003, -2.088848e-002, -2.454161e-002, -1.673934e-002, -3.355996e-002, 2.385159e-002, 1.929000e-002, 1.223538e-002, 1.754656e-002, 1.821611e-003, -5.211553e-002, -3.096068e-002, -2.078910e-002, -2.676689e-002, -1.558752e-002, -6.178681e-003, -2.259424e-002, -8.293240e-003, -6.380336e-003, -1.704042e-002, -3.580984e-002, -4.549840e-002, -2.010224e-002, 7.413360e-003, -1.022992e-002, -1.573101e-002, 2.436561e-003, 1.296748e-002, -6.018494e-002, -4.354388e-002, -2.817111e-002, 2.021389e-003, 1.874296e-002, 5.427476e-003, -5.860051e-002, -2.097098e-002, 2.656902e-002, -3.359806e-002, -7.200494e-002, -2.435133e-002, -1.747986e-003, 2.589818e-003, 2.125395e-002, 1.850391e-002, -8.827037e-003, -2.822030e-002, -6.553796e-003, 9.269432e-003, -2.424094e-002, -1.041416e-002, 6.522487e-003, -1.332588e-003, -1.932268e-001, -2.164579e-001, -1.792875e-001, -1.376262e-001, -6.764384e-002, -7.625803e-003, -3.799255e-002, -4.515905e-002, -5.915419e-002, -1.208928e-001, -1.636708e-001, -1.302424e-001, -6.744534e-002, -1.818898e-002, 2.819865e-002, 4.740584e-002, 1.172340e-002, -1.321602e-002, 2.255354e-003, -4.234147e-003, -4.704917e-002, -1.041195e-002, -1.387457e-002, 1.638061e-003},
{-1.525659e-003, -1.678367e-002, -2.238373e-002, -2.560621e-002, -2.050849e-002, -2.240211e-002, -2.174858e-002, -3.884907e-002, -6.703534e-002, -7.614153e-002, -6.430823e-002, -4.599692e-002, -1.322916e-002, 2.697223e-002, 5.411590e-002, 7.421154e-002, 9.160110e-002, 8.188289e-002, 6.301726e-002, 4.545097e-002, 1.826793e-002, 1.322527e-002, 5.647089e-002, 3.029022e-002, -

© ISO/IEC 2004 — All rights reserved


Copyright International Organization for Standardization
Provided by IHS under license with ISO
No reproduction or networking permitted without license from IHS
Not for Resale

3.997934e-002, -4.645922e-002, -4.268058e-002, -2.919587e-002, -2.000775e-002, -4.001708e-003, 8.012233e-003, -4.779618e-003, -3.566640e-002, -4.816956e-002, -3.835149e-002, -2.523273e-002, -2.258631e-002, -2.077458e-002, -2.182499e-002, -1.433570e-002, 1.195823e-002, 2.881238e-002, 2.474569e-002, 1.484165e-002, -1.197490e-002, -1.385066e-002, 2.385602e-002, 3.362244e-003, 8.100632e-003, -2.109980e-002, -3.978925e-002, -2.761820e-002, -8.072506e-003, 1.974944e-002, 4.987348e-002, 4.643611e-002, 1.623059e-002, 5.951191e-003, 8.750370e-003, 1.376066e-002, 7.694724e-003, -9.838149e-003, -4.715479e-002, -6.147883e-002, -3.505179e-002, 4.087075e-003, -1.879810e-003, -8.244248e-003, -2.113803e-002, -2.383921e-002, -1.676631e-002, -3.953852e-002, 1.958553e-002, 7.208838e-003, -1.325840e-002, -2.589474e-002, -1.329058e-002, 1.859527e-002, 5.514242e-002, 4.060648e-002, -8.866104e-003, -2.840841e-002, -2.204819e-002, -1.150270e-003, 1.621471e-002, 6.098234e-003, -7.968976e-003, -2.453169e-002, -1.666665e-002, 1.509534e-002, 2.923818e-002, 4.771014e-003, -1.202262e-002, -1.696000e-002, -2.974865e-002, -6.587135e-002, -4.068052e-002, -1.186223e-002, 3.463812e-003, -7.503110e-003, -2.727600e-002, -3.311100e-003, 2.168204e-002, -3.007363e-002, -8.084416e-002, -3.891890e-002, 2.346796e-002, 4.745461e-002, 1.107783e-002, -5.101316e-002, -9.248530e-002, -1.151899e-001, -1.025525e-001, -6.183489e-002, 1.118255e-002, 2.684138e-002, 6.820136e-003, 2.002228e-003, -1.766457e-002, -5.926586e-002, 4.524334e-002, 3.851624e-002, 5.610456e-002, 3.226878e-002, -5.080131e-002, -4.263424e-002, -2.593571e-002, -8.907200e-002, -9.746066e-002, 2.570666e-002, 7.794741e-002, 4.402962e-002, 1.377421e-002, 1.382323e-002, 4.862565e-003, -5.236929e-003, -1.730669e-002, -5.271536e-002, -5.562790e-002, -1.325033e-002, 8.954599e-003, 1.350747e-003, 4.711837e-003, -1.398310e-002, 3.805498e-002, 2.768835e-002, 3.489433e-002, 5.794157e-002, -6.350937e-002, -8.931387e-002, -6.866083e-002, -1.262432e-001, -6.930889e-002, 3.795908e-002, 1.024831e-002, -4.285087e-002, -7.927210e-003, 4.633008e-002, 5.926800e-002, 5.813953e-002, 7.498624e-002, 5.031674e-002, -1.782394e-002, -2.868242e-002, -1.185885e-002, 1.222843e-002, 3.811936e-002, 4.483238e-002, 2.080652e-002, -3.267209e-002, -6.403887e-002, 2.917191e-002, -2.460534e-002, -5.585190e-002, -4.006413e-002, -9.020854e-002, -7.612956e-003, 3.291997e-002, -2.375540e-002, -4.288958e-002, 5.204832e-002, 4.938696e-002, -5.610540e-003, -6.095478e-004, 7.882517e-002, 1.148747e-001, 6.494354e-002, 2.691889e-003, 3.750757e-003, 7.705194e-003, 1.308644e-003, 3.436274e-002, 8.335080e-002, -3.118637e-002, -1.157684e-001, -3.212694e-003, -2.778028e-002, -5.063875e-002, -3.166199e-002, -5.460311e-002, -3.337467e-003, 2.776481e-002, -3.004995e-003, 3.221968e-002, 9.415166e-002, 5.597326e-002, -8.736524e-003, 5.483434e-002, 1.934112e-002, 3.099783e-002, 3.495155e-002, -2.002266e-002, 2.318660e-003, -1.315574e-002, -3.397827e-002, 1.954824e-002, 6.584383e-002, -6.240221e-002, -1.469575e-001, -3.154377e-002, -6.006440e-002, -8.337942e-003, 9.526392e-003, -3.671294e-002, -4.359436e-002, -2.097209e-002, -4.820776e-002, -9.488893e-003, 3.985479e-002, 3.168950e-002, 2.833763e-002, 4.388639e-002, 8.600077e-003, -3.823918e-002, -3.490693e-002, -4.171297e-002, -2.676681e-002, -1.988141e-002, -3.973087e-002, 1.212324e-002, 1.186065e-001, 3.348318e-003, -5.632329e-002, -1.074749e-003, -6.057119e-002, 1.420428e-002, 2.398041e-002, -2.694276e-002, -5.044233e-002, -2.950811e-002, -2.431011e-002, 1.586396e-002, 7.741715e-002, 1.160861e-001, 1.183138e-001, 8.877792e-002, 1.396715e-002, -3.076248e-002, -9.229229e-003, 3.776457e-003, -1.445894e-002, 9.687091e-003, -1.217822e-002, -1.444775e-002, 1.568984e-001, 1.016418e-001, 5.330106e-002, -1.560233e-002, -1.898908e-002, 2.076218e-002, 3.051156e-002, -1.147678e-002, -2.526336e-002, -3.428941e-002, 1.634322e-002, 5.697965e-002, 8.371304e-002, 1.044417e-001, 9.926084e-002, 4.964347e-002, -3.413955e-002, -4.585394e-002, 4.995448e-003, 2.107870e-002, -1.448969e-002, 3.257253e-002, 2.194050e-002, -3.718477e-002, 1.657838e-001, 9.381928e-002, 1.562318e-002, -9.413092e-003, 2.256754e-002, 3.235035e-002, 4.552019e-002, -7.212814e-004, 5.414081e-003, 2.142892e-003, -1.977711e-002, 3.889435e-002, 7.892383e-002, 8.566913e-002, 6.711417e-002, 2.230893e-002, -3.608853e-002, -4.494188e-002, 5.460985e-003, 2.472547e-002, -2.300124e-002, 3.142259e-002, 3.894438e-002, -3.441608e-002, 5.792534e-002, -2.081874e-002, 4.704071e-003, 5.196824e-002, 4.924300e-002, 5.107884e-002, 6.380359e-002, 2.511787e-002, 2.264272e-002, 8.247543e-002, 1.495475e-002, -3.304758e-002, -1.212562e-002, 1.316028e-002, 1.013380e-002, -2.339195e-002, -6.278184e-002, -5.120778e-002, 5.494069e-003, 2.314593e-002, -2.536298e-002, 1.264132e-002, 3.047076e-002, -5.631154e-003, -3.646883e-002, -2.652997e-002, 7.503378e-002, 7.974810e-002, 4.403861e-002, 4.812724e-002, 4.543475e-002, 1.622922e-002, 3.417735e-002, 1.012951e-001, 7.758531e-002, -2.429838e-002, -4.663356e-002, -4.465530e-002, -4.326446e-002, -5.338052e-002, -7.319870e-002, -5.183195e-002, 4.954247e-003, 1.130819e-002, -3.709148e-002, -2.098224e-002, -3.900586e-003, 4.044961e-003, -8.638690e-003, 2.383252e-002, 7.072014e-002, 1.511942e-002, -2.191970e-002, -6.305717e-004, -5.131093e-003, 7.545933e-003, 3.477513e-002, 4.240932e-002, 6.665989e-002, -1.762281e-002, -4.162307e-002, -4.199304e-002, -4.890791e-002, -6.061043e-002, -7.546963e-002, -4.985931e-002, 3.510468e-003, 3.393532e-003, -3.936117e-002, -2.085117e-002, -2.262698e-002, -8.354287e-003, 3.545447e-002, 2.069305e-002, 5.694956e-003, -2.232876e-002, -2.217206e-002, 8.486291e-003, 9.827842e-003, 5.727319e-002, 8.445844e-002, 1.487666e-002, 1.411843e-002, -1.767160e-002, -1.707518e-002, 1.823772e-002, 1.656066e-002, -9.473754e-004, -1.543292e-002, 3.650421e-003, 3.844475e-002, 1.846249e-002, -1.366827e-002, 4.043809e-004, -2.103600e-002, -2.137943e-002,


© ISO/IEC 2004 — All rights reserved

Copyright International Organization for Standardization
Provided by IHS under license with ISO
No reproduction or networking permitted without license from IHS
Not for Resale

6.442094e-002, 2.365158e-003, -2.120099e-002, -4.666474e-003, 9.182103e-003, 2.891339e-002, 3.334571e-002, 3.813098e-002, -4.211244e-003, -6.314073e-002, -3.021002e-002, -1.405226e-002, -4.956701e-003, 5.149846e-002, 8.332570e-002, 6.710455e-002, 4.791441e-002, 5.235707e-002, 6.032044e-002, 2.786051e-002, 6.892514e-003, 2.436566e-002, -7.650273e-003, -1.305777e-002, 8.123559e-002, 5.785544e-003, -3.438507e-003, 2.290009e-002, -9.964460e-003, -1.158433e-002, -4.026322e-003, -2.697103e-003, -4.167561e-002, -6.545741e-002, -2.131708e-002, 8.780697e-004, 9.821320e-003, 3.077067e-002, 6.703679e-002, 6.404972e-002, 5.320614e-002, 6.013397e-002, 5.031477e-002, 1.643222e-002, 9.613376e-003, 1.187218e-002, 5.547917e-003, -8.793748e-003, 6.834275e-002, -1.200937e-002, -4.387427e-002, -9.116460e-003, 1.154005e-002, 2.246247e-002, 2.033717e-002, -4.628733e-006, -2.416456e-002, -5.341417e-002, -4.919444e-002, -1.228271e-002, 1.623827e-002, 8.710677e-003, 4.873290e-003, 9.653680e-003, 2.174400e-002, 3.430104e-002, 2.394415e-002, -4.738819e-003, -2.356732e-003, 7.142133e-003, 3.476247e-002, -4.861043e-003, 1.658959e-002, -5.645702e-002, -1.103638e-001, -1.025098e-001, -7.675025e-002, -4.170108e-002, -3.789434e-002, -7.874923e-002, -1.179584e-001, -1.499989e-001, -1.282117e-001, -6.656069e-002, -1.506035e-002, -1.559052e-002, -4.122353e-002, -4.633501e-002, -2.299018e-002, -1.245436e-003, -1.014580e-002, -2.338231e-002, -4.207428e-003, 6.453625e-003, 4.390449e-002, 1.150415e-003},
{3.683495e-002, 1.892893e-002, 2.247339e-002, 6.369079e-002, 1.217465e-001, 1.574190e-001, 1.595095e-001, 1.170804e-001, 3.206015e-002, -3.505040e-002, -3.967540e-002, -2.416081e-002, -3.764819e-002, -6.997051e-002, -8.841777e-002, -8.540374e-002, -6.794010e-002, -5.301565e-002, -3.143007e-002, -1.151232e-002, 4.994464e-003, 2.217752e-002, -1.696411e-002, -5.259247e-002, 3.054992e-002, -2.451564e-002, -5.812292e-002, -3.750740e-002, 4.054084e-002, 1.083670e-001, 1.298017e-001, 9.198023e-002, 1.088204e-002, -4.864750e-002, -2.534254e-002, 2.422899e-002, 2.902121e-002, 2.024629e-003, -3.965641e-002, -7.352725e-002, -8.350996e-002, -6.653681e-002, -2.588169e-002, -4.216929e-003, 9.788483e-003, 1.657340e-002, -5.336577e-004, -1.875970e-002, 3.000460e-002, -3.546914e-002, -1.126878e-001, -1.305035e-001, -7.040090e-002, 1.074258e-002, 4.986171e-002, 1.931997e-002, -3.978252e-002, -6.295583e-002, -3.256316e-002, -1.122413e-003, -2.022975e-003, -1.125566e-002, -1.730545e-002, -3.919855e-002, -7.254840e-002, -8.605092e-002, -4.184571e-002, 1.109271e-002, 9.586288e-003, 1.172392e-002, 2.468318e-002, 1.714251e-002, 2.191575e-002, 4.186791e-002, 1.675156e-003, -5.285759e-002, -5.355562e-002, -2.905353e-002, -1.369757e-002, -2.461520e-002, -5.059975e-002, -1.456325e-002, 2.653233e-002, 1.931422e-002, -4.657221e-003, 1.114131e-002, 4.541389e-002, 6.132902e-002, 3.775110e-002, -5.042562e-003, -2.680271e-002, 2.291290e-002, 9.791083e-003, -8.525651e-003, 1.149834e-002, 3.180932e-002, -4.067715e-002, -1.743133e-002, -1.508624e-002, -5.461958e-003, 7.403873e-003, -2.276136e-002, -5.269876e-002, -4.822995e-002, -3.950654e-002, 3.173931e-003, 4.279454e-002, 3.086838e-002, 8.267202e-003, -3.039782e-003, -1.729103e-003, 2.748162e-003, 1.059710e-003, -1.465298e-002, 3.256389e-003, 4.820826e-002, 9.640589e-003, -1.370879e-002, -1.545020e-002, -6.016570e-004, 7.241519e-002, 1.327426e-002, -9.076934e-002, -1.094918e-001, -2.309270e-002, -4.253635e-002, -7.975491e-002, -4.871062e-002, -5.563505e-002, -5.097280e-002, 3.015680e-003, 4.842539e-002, 4.297347e-002, 2.816741e-002, 2.171678e-002, 3.758255e-002, 3.455851e-002, -1.038054e-002, -2.756222e-002, 3.016120e-002, -2.578324e-003, -4.178981e-003, -2.594380e-002, -4.212000e-002, 3.872349e-002, 1.026582e-001, -5.696928e-003, -1.436474e-001, -2.146497e-002, -1.008128e-002, -4.340694e-002, 3.071500e-002, 7.410937e-003, -4.182298e-002, 6.571142e-002, 9.439384e-002, 4.721149e-002, 4.551370e-002, 4.752129e-002, 4.126158e-002, 5.303622e-002, 1.950468e-002, -1.477490e-002, 1.604324e-002, -2.061686e-003, 2.685602e-002, 5.253838e-003, -2.535811e-002, -2.149049e-001, -4.678335e-002, 2.837829e-002, -6.256953e-002, 2.868229e-002, 3.879395e-002, -1.908439e-002, 5.146822e-002, 2.372868e-002, -5.641052e-002, -1.880417e-002, -1.207231e-001, -1.017643e-001, 5.922286e-003, 7.345511e-002, -3.929516e-002, -4.240991e-003, 3.940392e-002, -1.323712e-002, -7.632417e-003, -4.208451e-003, 2.329676e-002, 2.501983e-002, 3.430168e-002, 9.004056e-002, 9.130969e-002, 1.118151e-001, 5.902416e-002, 4.410124e-002, 3.892433e-002, -1.622446e-002, 9.314920e-003, 1.366620e-002, 3.121435e-002, 3.762292e-002, 3.884277e-002, -1.305554e-002, -1.482682e-002, 7.893076e-002, 3.101300e-003, 4.078632e-003, 6.096274e-002, 2.954191e-002, -1.635306e-002, -2.987646e-002, -7.045431e-003, 1.611770e-002, 5.650493e-002, -2.708912e-003, 4.382478e-002, 1.019854e-001, 4.441986e-002, 1.622745e-003, 5.957423e-002, 1.136389e-002, -2.410468e-002, -7.662076e-003, 6.521599e-002, 1.428283e-002, 4.459290e-003, -5.939230e-003, -4.084542e-002, 1.886928e-002, 4.414876e-002, -2.622570e-002, -3.617004e-002, 1.817943e-002, -4.457563e-003, -3.911704e-002, -3.003383e-002, -2.866291e-002, 1.431068e-003, -1.465881e-001, -5.991375e-002, 5.104185e-002, -2.481599e-002, -9.927774e-003, 7.225479e-002, 1.335764e-002, -1.687086e-002, -3.031547e-002, 4.022029e-002, -1.004750e-002, -7.052467e-002, -7.638463e-002, -5.061447e-002, 1.067619e-002, 3.861818e-002, -4.756935e-005, -3.330698e-002, 6.677752e-003, 1.549125e-002, -2.114475e-002, -3.528077e-002, -4.027268e-002, -2.055159e-002, -1.338665e-001, -3.010306e-002, 2.522770e-002, -4.271174e-002, 2.138506e-002, 7.215722e-002, 1.103283e-002, -1.546134e-003, -8.066791e-003, 4.736534e-002, 8.571167e-003, -6.509038e-002, -9.171879e-002, -8.566447e-002, -5.244446e-002, -1.840855e-002, -1.893361e-002, -4.272232e-002, -2.307599e-002, 1.110545e-002, -9.280895e-005, -1.552131e-002, 5.990678e-003, 1.850188e-003, -

© ISO/IEC 2004 — All rights reserved


Copyright International Organization for Standardization
Provided by IHS under license with ISO
No reproduction or networking permitted without license from IHS
Not for Resale

5.958591e-002, 1.994838e-002, 1.459775e-002, -1.541388e-002, 4.792062e-002, 5.688709e-002, 1.033592e-002, -2.043314e-003, 2.880626e-002, 7.417099e-002, 4.991005e-002, -2.040304e-002, -4.902828e-002, -4.079594e-002, -1.910670e-002, -1.269495e-002, -2.119611e-002, -4.158504e-002, -2.805004e-002, 6.937434e-003, 3.740982e-004, 5.499449e-003, 5.052481e-002, 2.682122e-002, 2.636469e-002, 5.449034e-002, 2.735965e-002, 3.976161e-002, 5.953515e-002, 5.173643e-002, 1.560299e-002, -1.608762e-002, 3.141485e-002, 1.020615e-001, 5.462406e-002, -7.848268e-003, -1.165477e-002, 6.745168e-003, 2.804958e-002, 4.302260e-002, 3.716026e-002, 5.298294e-003, 7.689083e-003, 1.564361e-002, -1.153227e-003, 1.616039e-002, 4.014123e-002, 7.208543e-003, 2.925623e-002, 1.806665e-002, 3.092606e-002, 5.298288e-002, 4.548693e-002, 3.076273e-002, 8.932133e-003, -1.730086e-002, -1.040704e-002, 6.586223e-002, 5.686319e-002, -4.018474e-002, -2.877440e-002, 1.201908e-002, 5.342728e-002, 7.975346e-002, 7.556014e-002, 4.999916e-002, 3.310224e-002, 1.063034e-002, 1.108058e-002, 7.084851e-003, -3.206719e-003, -1.438861e-002, -2.633879e-002, -3.436406e-002, -1.583842e-002, -6.541427e-003, 2.463842e-003, -4.319058e-002, -4.555929e-002, -1.010992e-002, -6.021847e-002, -3.507558e-002, 1.236163e-002, -5.089910e-002, -4.496266e-002, 1.541875e-004, 4.852471e-002, 8.626621e-002, 8.478355e-002, 6.178912e-002, 3.294795e-002, 8.777656e-003, 9.310971e-003, -1.297442e-002, -5.194329e-002, -1.196067e-002, -7.467117e-002, -4.822908e-002, -3.100200e-002, 3.012130e-003, 3.241408e-002, -5.307683e-002, -2.835514e-002, 7.074488e-002, 2.774202e-002, 5.849831e-003, 4.219663e-003, -5.449177e-002, -5.190844e-002, -1.275949e-002, 2.982370e-002, 5.671625e-002, 4.936201e-002, 3.417517e-002, 1.542558e-002, 3.208709e-003, 8.566896e-003, -1.605544e-002, -4.305786e-002, -5.516527e-003, -6.254831e-002, 1.467769e-002, 2.899585e-004, -8.640838e-002, -7.201985e-002, -2.712249e-002, 4.019373e-003, 1.752716e-002, -2.633341e-002, 5.571106e-002, 2.528793e-002, -4.395518e-002, -4.662931e-002, -2.586183e-002, -1.786923e-003, 8.708797e-003, 1.240987e-003, 2.557057e-003, -2.016039e-003, -2.974318e-003, 5.539315e-003, 8.801557e-003, 3.115708e-002, 7.569824e-003, -8.944283e-003, 4.671874e-002, 4.774665e-002, -8.950770e-003, -3.016783e-002, -2.343060e-002, -6.185974e-003, 3.022537e-002, 1.908645e-002, 7.375710e-004, -3.299628e-002, -5.085731e-002, -2.931345e-002, 3.977908e-003, 1.006840e-002, 4.933139e-004, -1.645562e-002, -1.249877e-002, -1.526382e-002, -1.222969e-002, 2.243471e-003, 2.896850e-002, 6.595414e-002, -8.967417e-003, 3.906093e-002, 3.634060e-002, -6.707369e-003, -4.573815e-002, -1.595874e-002, 5.230421e-003, -1.793919e-002, -2.840620e-002, -3.795596e-003, -1.950887e-002, -3.501496e-002, -1.030784e-002, 1.009862e-002, 3.180844e-002, 3.251101e-002, 2.164205e-003, -1.952226e-002, -1.599157e-002, -2.122288e-002, -2.071009e-002, -1.430976e-002, 1.194719e-002, 1.866461e-002, -1.607811e-002, 6.844157e-002, 3.554306e-002, -3.144666e-002, -7.648198e-002, -3.922079e-002, 9.546437e-003, -1.135420e-002, -5.932783e-002, -5.382834e-002, -1.353872e-002, 4.142621e-002, 8.231833e-002, 7.737175e-002, 7.369272e-002, 5.692851e-002, 9.785654e-003, -1.915053e-002, -2.067636e-002, -2.267140e-002, -2.529253e-002, -3.186479e-002, -1.920446e-002, -3.111473e-002, 1.378864e-003},
{1.389988e-001, 7.873643e-002, 1.562809e-002, -3.372237e-002, -6.093152e-002, -7.233153e-002, -6.988442e-002, -7.344202e-002, -1.066911e-001, -1.362156e-001, -1.268512e-001, -1.035025e-001, -7.295083e-002, -3.438840e-002, -7.776716e-003, 9.260031e-003, 3.219188e-002, 5.130994e-002, 5.705224e-002, 7.075989e-002, 5.990321e-002, 3.256407e-002, -2.520068e-002, -1.353895e-002, 1.002668e-001, 5.194403e-002, 4.633340e-003, -1.892375e-002, -2.430084e-002, -9.351037e-003, 3.569592e-003, 9.568433e-003, -1.264556e-002, -3.900047e-002, -2.456426e-002, 1.495133e-003, 1.107339e-002, 8.480762e-003, -7.379384e-003, -1.861479e-002, 1.063101e-003, 1.561647e-002, 1.418950e-002, 2.819714e-002, 3.770544e-002, 2.737042e-002, -1.035137e-002, 2.623593e-003, 4.534548e-002, 4.470635e-003, -2.973490e-002, -2.234921e-002, 7.596250e-003, 3.702475e-002, 5.538414e-002, 6.455026e-002, 4.208100e-002, 1.224050e-002, 1.678817e-002, 2.232966e-002, -1.774815e-003, -3.852545e-002, -6.765268e-002, -6.416460e-002, -1.902647e-002, 7.755858e-003, -1.456086e-002, -2.248633e-002, -2.647705e-003, 5.760163e-003, 7.191924e-005, 1.849263e-002, 5.280958e-002, 2.424496e-002, -1.106370e-002, -1.224737e-002, 1.553669e-002, 3.165071e-002, 4.188300e-002, 4.274608e-002, 1.521878e-002, -1.822818e-002, 1.027128e-002, 4.103421e-002, 4.322303e-002, 1.038925e-002, -5.552638e-002, -8.438206e-002, -5.117169e-002, 1.569862e-002, 1.406339e-002, -2.534176e-002, -1.915647e-002, -1.716405e-002, 1.109937e-003, 2.069900e-002, 4.698435e-002, 1.745296e-002, -1.718206e-002, -3.062909e-003, 3.356946e-002, 4.848599e-002, 5.020758e-002, 6.035178e-002, 3.726583e-002, 7.097128e-003, 1.460755e-002, 1.828041e-002, 4.222191e-002, 4.503742e-002, -1.616446e-002, -8.571480e-002, -1.147665e-001, -7.496673e-002, -2.636947e-002, -2.643953e-002, 3.091848e-003, -2.407499e-002, 3.896379e-003, 1.344074e-002, 4.878419e-002, 2.917014e-002, -1.345495e-002, -1.560311e-002, 3.620184e-002, 3.990267e-002, 3.632147e-002, 7.973442e-002, 9.338345e-002, 1.928467e-002, -7.058875e-002, -8.174492e-002, -3.805948e-003, 6.420581e-002, 4.763256e-002, -3.895544e-003, -5.539782e-002, -5.998303e-002, -2.159457e-002, -2.881279e-002, 2.278960e-002, 9.276420e-003, 5.244168e-003, -7.852618e-003, -8.789698e-002, -9.888819e-002, -3.391219e-002, 6.496415e-003, 1.005333e-002, -1.553776e-002, -3.094755e-002, 5.809263e-002, 9.773536e-002, 3.803653e-002, -6.337619e-002, -5.550294e-002, 5.239143e-002, 1.368479e-001, 1.333104e-001, 5.457914e-002, -3.584511e-002, -3.958292e-002, 1.718389e-002, 1.279295e-002, 3.516139e-002, 3.638315e-002, 1.641457e-002, 2.062764e-003,


--`,,```,,,,````-`-`,,`,,`,`,,`---

© ISO/IEC 2004 — All rights reserved

Copyright International Organization for Standardization
Provided by IHS under license with ISO
No reproduction or networking permitted without license from IHS

Not for Resale

4.464256e-002, -1.004036e-001, 1.357659e-002, 4.122442e-002, 3.465007e-002, 3.289141e-002, 1.224738e-002, 4.510280e-002, 2.785742e-002, 8.813475e-002, 2.613295e-002, 5.036377e-003, 5.029761e-002, 3.619825e-002, 6.564802e-002, 5.820796e-002, 5.822095e-003, -2.622617e-002, 1.390955e-002, 1.029123e-002, -1.479331e-002, 7.282824e-003, -9.358841e-003, 1.649965e-002, 4.063982e-002, -8.545700e-003, 9.019829e-002, -1.386737e-002, -4.520021e-002, -3.986759e-004, -1.427234e-002, -1.493656e-002, -1.000906e-001, 4.336773e-002, 3.268236e-002, 4.305189e-002, 1.294135e-001, 6.758434e-002, 2.113425e-002, 3.173036e-004, 8.647878e-002, 9.758868e-002, 6.088442e-002, 8.303815e-003, -5.783001e-002, -2.486035e-002, -4.988606e-002, -2.088970e-003, -1.230217e-001, -2.592677e-002, 8.837518e-002, -6.836579e-002, -5.217729e-002, -4.941694e-002, -4.098087e-002, -6.119652e-003, -1.007728e-001, -3.325713e-002, -4.665461e-002, -9.075745e-002, -3.184520e-002, 6.266678e-002, 8.349497e-002, 4.435247e-002, 4.568888e-002, 5.687454e-002, 7.902272e-002, 4.106102e-002, -8.026287e-003, 1.412688e-002, -2.920154e-002, 8.370128e-003, -1.513967e-001, -1.918427e-002, 6.644226e-002, -4.316544e-002, -6.904191e-004, -3.657858e-002, -1.595152e-002, 1.975902e-002, -3.535942e-002, -4.279451e-002, -5.273386e-002, -1.363694e-001, -1.398433e-001, -8.647937e-002, -1.866114e-002, 3.081922e-002, 3.841702e-002, 2.903276e-002, 3.859685e-002, 3.083812e-002, 1.679833e-002, 3.609510e-002, 1.537310e-002, 8.332810e-003, -1.347001e-001, -4.786857e-002, -2.683378e-002, 2.514133e-002, 2.193215e-002, 8.362119e-004, 1.705519e-002, 2.962297e-002, 1.915805e-002, -1.995171e-002, -3.603847e-002, -9.367334e-002, -1.339358e-001, -1.126714e-001, -4.672919e-002, 1.790278e-002, 3.197438e-002, 2.281825e-002, 1.406648e-002, 2.101355e-003, 1.255758e-002, 2.655966e-002, 1.234664e-002, 1.823962e-002, -1.386669e-001, -8.190605e-002, -4.733909e-003, 5.176006e-002, 1.069684e-002, 2.653963e-002, 4.095056e-002, 2.237365e-002, 1.507031e-002, 4.978965e-003, -1.416321e-002, -3.637147e-002, -7.490425e-002, -7.108259e-002, -2.644619e-002, 2.243412e-002, 2.978524e-002, 1.195489e-002, -5.777073e-003, -1.178587e-002, 1.734681e-002, 3.790364e-003, -3.620543e-003, 2.504200e-002, -6.513833e-002, 2.034604e-002, 3.970601e-002, 1.090591e-002, -2.917180e-003, 2.994180e-002, 4.969066e-002, 1.074650e-002, -1.472487e-002, 7.102769e-003, -2.171155e-002, -1.876644e-003, -6.807183e-003, -2.130776e-002, -1.021555e-002, 1.750995e-002, 2.559799e-002, 3.119077e-003, -8.222491e-003, -2.261196e-002, 1.113655e-002, 3.061813e-004, 4.962499e-003, 7.931665e-003, 3.785113e-002, 2.295250e-002, -3.462368e-002, -3.488635e-002, -2.531101e-002, 1.997418e-002, 5.508748e-002, 1.890446e-002, -3.432426e-002, -1.070290e-002, -6.753677e-003, -1.817385e-002, -4.943288e-003, 3.025274e-003, 1.651478e-002, 2.264888e-002, 1.797404e-002, 5.343377e-003, -6.148028e-003, -1.001486e-002, 1.612286e-002, 5.569314e-003, -1.356777e-003, -2.432443e-003, 4.321225e-002, -2.485079e-002, -3.048617e-002, -2.299500e-003, -1.563522e-002, -6.121379e-003, 1.235910e-002, 2.912806e-003, -2.366018e-002, 1.545866e-002, 3.422404e-002, 2.860541e-002, 3.697770e-002, 5.641794e-002, 7.338774e-002, 6.595761e-002, 4.745786e-002, 3.346115e-002, 1.717066e-002, 7.622718e-003, 2.197962e-002, -3.554488e-003, -1.312133e-002, 6.931293e-003, 2.522775e-002, 5.239495e-004, 2.656574e-002, 3.229345e-002, 7.275558e-003, -1.216722e-002, -2.508544e-002, -4.009643e-002, -4.092916e-002, 2.626185e-002, 5.826375e-002, 6.704803e-002, 6.197299e-002, 7.130754e-002, 8.495162e-002, 7.213480e-002, 4.582562e-002, 3.232621e-002, 1.157501e-002, -3.146125e-003, 1.063827e-002, -1.698440e-002, -1.994556e-002, 4.440924e-003, 5.425950e-002, 3.525579e-002, 9.751561e-003, -3.758020e-004, -6.192574e-003, 2.620011e-003, -1.094429e-002, -3.330391e-002, -3.643045e-002, 6.725792e-003, 2.947190e-002, 6.207094e-002, 5.175773e-002, 2.610294e-002, 2.166185e-002, 9.446461e-003, 3.380253e-003, 1.086691e-003, -1.579681e-002, -1.983845e-002, 3.255718e-003, -2.300743e-002, -1.122128e-002, -1.264602e-003, 8.399013e-002, 3.534056e-002, -3.219378e-002, -1.007974e-002, -4.608929e-003, -3.764868e-002, -5.893989e-002, -7.917031e-002, 7.845262e-003, 4.829426e-002, 3.878528e-002, 4.576273e-002, 3.530956e-002, -1.933761e-003, -3.221078e-002, -4.284986e-002, -3.216639e-002, -2.337862e-002, -3.346707e-002, -3.115082e-002, -1.071998e-002, -1.747738e-002, 1.743370e-002, -5.570038e-004, 4.210349e-002, 2.015812e-002, 1.075016e-002, 1.266550e-002, -2.438670e-002, -2.947446e-002, -5.656868e-003, -3.193964e-002, 7.780713e-004, 4.885625e-002, 4.624815e-002, 1.289184e-002, -1.718091e-003, -1.882250e-002, -4.978921e-002, -6.512931e-002, -4.210769e-002, -3.237125e-002, -4.715123e-002, -4.270039e-002, -2.069403e-002, -1.238413e-002, 1.751678e-002, 8.566420e-003, -2.762393e-002, 7.494667e-004, 2.916563e-002, 1.485001e-002, -3.650327e-002, -2.429716e-002, 3.600240e-002, 3.908697e-003, -1.331529e-002, -8.154280e-003, -2.048110e-002, -4.922053e-002, -5.910504e-002, -5.487405e-002, -6.629472e-002, -6.578618e-002, -3.951250e-002, -3.372790e-002, -5.007849e-002, -4.932357e-002, -2.872958e-002, 2.158578e-003, 1.715010e-002, 2.643635e-002},
{1.771921e-001, 1.355299e-001, 7.858879e-002, 2.282203e-002, -1.858889e-002, -4.501047e-002, -6.872908e-002, -7.829933e-002, -8.746061e-002, -8.416014e-002, -6.861487e-002, -5.207314e-002, -4.640444e-002, -4.724053e-002, -5.785983e-002, -9.166327e-002, -1.193882e-001, -9.712185e-002, -4.208924e-002, -2.513624e-002, -2.922636e-002, 4.576256e-002, 6.264113e-002, 7.128851e-002, 1.105969e-001, 8.605406e-002, 5.505932e-002, 2.477229e-002, 1.203469e-004, -2.764459e-003, -2.618204e-003, -7.375465e-003, -6.804983e-003, 1.562126e-002, 5.741024e-002, 6.651252e-002, 4.002419e-002, 2.089465e-002, 1.873662e-002, 8.913812e-004, -1.808285e-002, -2.100508e-002, 8.140102e-003, 2.247208e-002, -1.051239e-002, 3.453092e-002, 1.656274e-002, 3.936990e-002, -

© ISO/IEC 2004 — All rights reserved


Copyright International Organization for Standardization
Provided by IHS under license with ISO
No reproduction or networking permitted without license from IHS
Not for Resale

1.375623e-003, -2.616241e-002, -3.197979e-002, -2.463931e-002, -6.618517e-003, 1.542575e-002, 3.383488e-002, 2.950904e-002, 1.189994e-002, 2.437194e-002, 2.926556e-002, 7.593068e-003, -3.341555e-002, -4.750640e-002, -3.930858e-002, -1.149616e-002, 2.363061e-002, 3.248006e-002, 3.783733e-002, 5.305862e-002, 1.476615e-002, 3.380491e-002, -3.168792e-002, 1.040233e-002, 4.630843e-002, 5.787553e-002, 3.815864e-002, 4.306367e-003, -9.183753e-003, -1.143791e-002, 1.347975e-003, -2.597829e-003, -1.605491e-002, 2.239176e-002, 4.354650e-002, 3.819632e-002, 1.006049e-002, -2.590207e-002, -3.451857e-002, 2.552572e-003, 6.161891e-002, 6.255352e-002, 2.107589e-002, 1.140508e-002, 9.977158e-003, 2.745064e-002, -4.586422e-002, -2.468962e-002, -3.543784e-002, -5.700388e-003, 5.076118e-002, 6.717944e-002, 2.786494e-002, 5.445721e-003, -8.217733e-003, -2.165399e-002, -1.063147e-002, 3.404793e-002, 5.556562e-002, 4.250100e-002, 1.144686e-002, -2.005335e-002, -3.702058e-002, -1.752065e-002, 3.107016e-002, 5.889074e-002, 1.891715e-002, -4.077111e-002, -4.681090e-002, 7.806843e-003, -1.954466e-002, -4.255475e-002, 1.794440e-002, -2.185583e-002, -6.978381e-003, 4.653147e-002, 5.495535e-002, 5.024686e-002, 2.538495e-002, 2.598697e-002, 1.572784e-002, -3.322983e-003, -4.992749e-003, -5.973855e-003, 2.482623e-002, 2.433637e-002, -2.924568e-003, -3.967147e-003, 1.629540e-002, 1.099115e-002, -1.143857e-003, -2.199697e-002, -6.181453e-002, -3.721794e-002, 2.197959e-002, -3.756970e-002, 1.487260e-002, -8.459265e-002, -1.165189e-001, -7.049125e-002, -4.854227e-002, -2.965944e-002, 1.082302e-002, 2.694785e-002, -3.629542e-002, -1.317720e-001, -1.568256e-001, -6.429424e-002, 2.824196e-002, 4.444328e-003, -9.395547e-003, -1.239982e-002, -2.108183e-002, -1.371065e-002, -1.656783e-002, 1.198274e-002, -2.541493e-002, -4.572688e-002, 3.890514e-002, -1.820948e-002, 9.104766e-002, -5.346388e-002, -7.960402e-002, -7.990495e-002, -1.228655e-001, -1.295298e-001, -6.612628e-002, -4.058188e-002, -5.002717e-002, -9.356850e-002, -5.523942e-002, 5.690335e-002, 5.424158e-002, -5.990125e-002, -2.743426e-002, 6.703553e-002, 6.451698e-002, 2.290622e-002, -2.127094e-002, 1.855039e-002, 2.442871e-002, -1.647043e-002, 1.154406e-002, -2.563024e-002, 3.004337e-002, 3.189173e-002, 7.287647e-002, 2.749722e-002, -7.652461e-002, -6.799825e-002, -3.648083e-002, -2.515588e-002, 1.716920e-002, 9.579345e-002, 1.510084e-001, 1.464026e-001, 4.393499e-002, 9.282566e-003, -3.218336e-002, -9.683291e-002, -1.734206e-002, -1.100427e-002, -7.221856e-002, -5.807254e-002, -2.777224e-002, -1.555829e-002, -2.692356e-002, 5.353150e-003, -3.126336e-002, 2.838199e-002, 7.836993e-002, 5.744238e-002, 1.715048e-002, 1.250735e-003, -3.876041e-002, -1.000053e-002, 3.285418e-002, 3.704578e-002, 7.635783e-002, 4.861449e-002, -1.469802e-003, -5.499017e-003, 7.923318e-003, 1.566837e-002, 6.594372e-002, 1.320328e-002, -5.173247e-002, -5.006333e-002, -4.568510e-002, 1.099831e-002, -2.390699e-002, 4.113622e-002, -7.894072e-002, -6.836319e-003, 6.597287e-002, 7.725215e-002, 7.158746e-002, 4.281934e-002, -5.613269e-003, -1.077753e-003, 3.944127e-002, -5.097770e-002, 1.912280e-003, -2.136900e-002, -6.342972e-002, -6.343510e-002, -3.254041e-002, -5.911968e-003, 2.665740e-002, 2.285092e-002, 2.668665e-003, 6.735045e-003, -1.610536e-002, 2.024418e-002, -3.221049e-002, 3.317204e-002, -5.639204e-002, 9.660181e-003, 4.739072e-002, 5.053595e-002, 6.623073e-002, 5.454340e-002, 2.260882e-002, 3.211346e-003, 2.904557e-002, -4.977422e-002, -4.465324e-002, 1.447270e-002, -2.729374e-003, -3.160424e-002, -4.376806e-002, -3.996197e-002, -1.218268e-002, 1.408389e-002, 1.915035e-002, 2.160692e-002, -1.488868e-002, 7.812198e-003, -4.585512e-002, -1.899967e-002, -2.419243e-002, -2.776756e-002, -2.373606e-002, 4.475183e-003, 2.072004e-002, 4.808806e-002, 3.226935e-002, -7.839541e-004, 1.801634e-002, 2.374508e-004, -4.084013e-002, 2.352737e-002, 6.685371e-002, 6.626854e-002, 4.514251e-002, 1.929844e-002, 1.382910e-002, 1.501465e-002, 1.291963e-002, 2.754702e-002, -2.433398e-002, -1.442212e-002, -1.713011e-002, -4.441967e-002, -7.051468e-002, -8.989499e-002, -3.982829e-002, -3.628257e-002, -1.888580e-002, 2.831235e-002, 1.689353e-002, -4.314635e-003, -2.635934e-003, 5.713306e-002, 2.378989e-003, -1.996669e-003, 5.035367e-002, 8.470369e-002, 7.826255e-002, 4.906071e-002, 1.183789e-002, -1.072029e-002, -1.343796e-003, 1.861550e-002, -2.718869e-002, -1.320787e-002, 2.450753e-002, -1.269844e-002, -1.200798e-001, -6.127663e-002, -9.213814e-003, -4.822491e-002, -2.386041e-002, 3.502937e-002, 2.390730e-002, -5.243814e-004, -2.725687e-002, 3.256734e-002, 5.081160e-002, -3.117072e-002, -3.690669e-002, -1.410005e-002, -1.013424e-002, -3.020102e-002, -4.801181e-002, -3.853690e-002, -6.430881e-003, 3.356230e-002, -1.411991e-002, -1.146343e-002, 4.182644e-002, 1.286442e-002, -7.153463e-002, 2.678132e-003, 5.699169e-003, -9.762969e-003, 4.339401e-002, 6.210902e-002, 2.571096e-002, 1.442372e-002, -1.186564e-002, -2.467899e-002, 2.374680e-002, -2.501290e-002, -6.925628e-002, -7.445706e-002, -8.379128e-002, -8.937250e-002, -7.224750e-002, -2.387635e-002, 1.782243e-002, 6.112393e-002, 1.241183e-002, 1.565127e-003, 2.656117e-002, -2.455312e-004, -3.916387e-003, 2.942904e-002, 6.442131e-003, 2.745998e-002, 6.171115e-002, -1.570377e-002, -7.256855e-002, -5.152978e-002, -2.787614e-002, -4.217939e-002, -1.999697e-002, -7.747683e-003, -2.545511e-002, -2.554835e-002, -2.729856e-002, -1.600684e-002, 1.866501e-002, 4.856550e-002, 5.649780e-002, 7.440246e-002, 3.826186e-002, 1.024828e-002, -2.795102e-002, -1.822905e-002, 7.051490e-003, 8.223230e-003, -8.265061e-003, -7.098481e-003, -1.986079e-002, -4.399456e-002, -3.439748e-002, -1.137238e-002, 1.692062e-002, 2.566844e-002, 2.551640e-002, 3.678419e-002, 3.907791e-002, 4.131466e-002, 5.391613e-002, 6.746438e-002, 8.371855e-002, 6.577353e-002, 4.379451e-002, 7.156074e-002, 4.706931e-002, 7.760637e-003, -5.138776e-002, -1.049562e-002,


© ISO/IEC 2004 — All rights reserved

Copyright International Organization for Standardization
Provided by IHS under license with ISO
No reproduction or networking permitted without license from IHS
Not for Resale

1.583704e-002, -7.581931e-003, -3.796996e-002, -1.580012e-002, -4.670508e-002, -5.221370e-002, -4.981066e-003, -5.800424e-004, 2.748000e-002, 4.179142e-002, 5.327027e-002, 3.844991e-002, 4.172762e-002, 3.490658e-002, 4.616698e-002, 7.061927e-002, 7.101600e-002, 2.861577e-002, 5.497552e-003, 5.487469e-002, 4.082358e-002, 1.906308e-003, -1.441579e-002, 1.471071e-002, 4.025353e-002, 1.654497e-002, -2.331956e-002, -2.555117e-002, -3.772079e-002, -3.047202e-002, -8.854384e-003, -2.388812e-002, 2.160287e-002, 2.941527e-002, 2.158972e-002, 8.298928e-003, 5.401822e-003, -3.392754e-004, 4.238238e-003, 2.840130e-002, 1.894135e-002, -4.202517e-002, -4.581275e-002, 1.801097e-002, 1.916070e-002, 2.494701e-003, 1.808260e-002, -3.620817e-002, 1.838042e-002, -6.929370e-003, -3.949905e-002, -4.471475e-002, -3.958475e-002, -1.288427e-002, 8.156434e-003, -8.742742e-003, 6.383500e-003, -1.872326e-002, -3.521632e-002, -2.686702e-002, -2.841739e-002, -3.288775e-002, -2.897622e-002, -2.236258e-002, -4.460672e-002, -1.021082e-001, -8.060734e-002, -1.132835e-002, 2.059913e-003, -1.627658e-002, -2.531127e-002, -1.567970e-001},
{1.021966e-001, 1.059221e-001, 8.711393e-002, 5.002951e-002, 4.520890e-003, -3.204722e-002, -5.511079e-002, -5.453440e-002, -2.879817e-002, -4.405173e-003, 1.033253e-002, 3.016286e-002, 4.157828e-002, 2.332214e-002, -3.598331e-002, -9.204169e-002, -1.020102e-001, -6.927454e-002, -5.712283e-002, -5.582271e-002, 3.082204e-003, 5.610220e-003, -3.093830e-002, 1.203824e-002, 2.556136e-002, 5.555506e-002, 6.813964e-002, 5.973306e-002, 1.553137e-002, -4.012920e-002, -7.366208e-002, -6.897414e-002, -2.734623e-002, 8.928538e-003, 3.415904e-002, 5.884482e-002, 8.312848e-002, 6.979738e-002, -1.123917e-003, -7.570750e-002, -1.035035e-001, -3.515193e-002, 1.879971e-002, 6.788619e-003, 2.761908e-002, 2.662450e-002, -1.241323e-002, 1.823765e-002, -5.134905e-002, -1.766635e-002, 2.328258e-002, 6.668410e-002, 4.909387e-002, -5.621132e-003, -4.764598e-002, -3.254162e-002, 1.871641e-002, 4.263139e-002, 6.290333e-002, 8.663875e-002, 9.794511e-002, 5.698516e-002, -2.627992e-002, -1.159264e-001, -1.618969e-001, -9.822378e-002, 2.412813e-002, 5.482512e-002, 5.331534e-002, 3.096799e-002, 5.774978e-003, 9.726893e-003, 8.322991e-002, 4.195853e-002, 2.288439e-002, 5.446190e-002, 5.576742e-002, 3.610688e-003, -1.893072e-002, 1.044255e-002, 4.600346e-002, 1.363466e-002, 8.599380e-003, 3.788167e-002, 8.523929e-002, 8.410799e-002, 2.329807e-002, -5.832106e-002, -1.135395e-001, -7.467669e-002, -8.093458e-003, 2.293998e-002, 3.005201e-002, 1.177086e-002, 8.835418e-003, -1.405938e-003, 8.869542e-002, 1.931884e-002, -3.220532e-002, -3.065679e-002, -1.435039e-002, -4.673307e-002, -4.705526e-002, -7.305328e-003, -5.424361e-003, -9.308479e-002, -1.018501e-001, -3.352507e-002, 2.767301e-002, 4.874763e-002, -1.123799e-003, -5.267074e-002, -7.378482e-002, -3.340823e-002, 2.214074e-002, -9.774284e-004, -3.068195e-002, -3.168522e-002, -8.359012e-003, 4.217706e-003, 4.856412e-002, 3.537439e-002, -1.582040e-002, -3.879989e-002, -3.421782e-002, -6.099221e-002, -5.164342e-002, -9.070615e-003, -1.891558e-002, -7.423696e-002, -2.771009e-002, 3.994921e-002, 3.311120e-002, -9.349332e-003, -5.965910e-002, -1.071143e-001, -1.219077e-001, -8.468150e-002, -5.005036e-003, -1.246812e-002, -3.304644e-002, -3.379860e-002, -3.403863e-002, 9.376199e-003, -2.922804e-002, 2.519939e-002, 7.754362e-002, 5.781790e-002, 1.416325e-002, -5.103071e-002, -5.788830e-002, -7.816016e-003, 2.146033e-002, 5.746308e-002, 9.280919e-002, 5.340460e-002, -9.201013e-003, -5.740042e-003, 3.553615e-002, 6.509470e-002, 5.995835e-002, 1.019308e-002, -3.167821e-003, -3.236085e-002, 6.832391e-004, 2.899601e-002, -1.617779e-002, 1.264386e-002, -8.814262e-002, -8.876686e-002, 2.360630e-002, 6.995676e-002, 3.612574e-002, -1.408828e-002, -1.540939e-003, 3.624155e-002, 4.376228e-002, 6.983465e-002, 3.985038e-002, -3.099993e-002, -6.731631e-002, -3.088285e-002, -2.606204e-002, -9.034617e-003, -1.346891e-002, -1.607448e-003, 4.690375e-003, -2.838222e-002, -1.855322e-002, 3.493262e-002, -1.869528e-002, 1.402514e-002, -2.912881e-002, -1.536005e-001, -8.681069e-002, -1.343997e-002, 3.511074e-002, 6.932855e-002, 9.103040e-002, 8.454584e-002, -9.328532e-003, -4.193403e-002, -9.152821e-002, -8.537393e-002, 3.558449e-002, -8.788312e-003, -5.166870e-002, 9.455308e-002, 5.996996e-002, -4.829224e-002, -4.967209e-002, -2.377132e-002, -1.953711e-002, 3.343250e-002, -2.244785e-002, -9.863456e-004, -2.468558e-002, -5.854219e-002, -2.506759e-002, -1.340350e-002, 2.246944e-002, 5.976614e-002, 7.271463e-002, 5.376242e-002, -1.497433e-002, -2.467959e-002, -5.492004e-002, -6.787148e-002, -1.483371e-002, 1.744798e-003, 7.559059e-003, 7.465046e-002, 9.417365e-002, 6.405656e-002, 2.623240e-002, 1.353385e-002, -1.495326e-002, 1.743716e-003, -9.147216e-003, 9.583864e-003, 9.443224e-002, 9.371462e-002, 6.977075e-002, 3.362624e-003, 1.048440e-002, 1.730333e-002, 3.876721e-002, 2.618281e-002, 1.346165e-002, 4.482276e-002, 5.640462e-002, 4.174155e-002, 3.530709e-002, 2.027547e-002, 4.832077e-003, 1.793807e-002, 2.194798e-002, 9.437530e-003, 3.441735e-003, 2.047581e-002, 3.014576e-003, -3.399276e-003, 1.312277e-002, 1.571424e-002, 1.274767e-001, 8.522222e-002, 3.312316e-002, 4.533706e-003, -1.384995e-002, 7.099843e-003, 2.646767e-002, 9.597828e-003, 3.251344e-002, 5.044741e-002, 6.660677e-002, 8.185781e-002, 8.776754e-002, 7.137124e-002, 4.913928e-002, 2.671826e-002, -1.509250e-002, -5.080709e-002, -3.846125e-002, 9.975009e-003, 2.538100e-002, 2.414293e-003, 1.698640e-002, 4.199229e-004, 3.073631e-002, -6.304059e-003, -1.000495e-002, -1.238341e-002, -3.433245e-002, 3.797212e-003, 1.215207e-002, -2.316380e-002, 1.508514e-002, 2.961852e-002, 1.249092e-002, 1.861166e-002, 2.931931e-002, 2.673653e-002, 6.639945e-003, -2.170007e-002, -5.294958e-002, -8.211123e-002, -5.474825e-002, 2.239262e-002, 3.278731e-002, 2.301721e-002, -1.469647e-003, -5.111347e-003, -

© ISO/IEC 2004 — All rights reserved


Copyright International Organization for Standardization
Provided by IHS under license with ISO
No reproduction or networking permitted without license from IHS
Not for Resale

8.467027e-002, -6.375989e-002, -1.804680e-002, -4.325929e-002, -5.911953e-002, -2.339018e-002, -1.299661e-002, -4.671556e-002, -1.764118e-002, -9.264846e-003, -3.642225e-002, -5.105898e-002, -5.430516e-002, -5.211118e-002, -5.637241e-002, -6.661254e-002, -7.657647e-002, -7.242984e-002, -2.002118e-002, 3.269062e-002, 2.236645e-002, 1.506016e-002, -1.427094e-002, 2.496127e-002, -9.175447e-002, -4.016743e-002, 7.675990e-003, -4.962641e-002, -5.737534e-002, -6.186445e-002, -5.118224e-002, -4.180953e-002, -3.935697e-002, -5.736287e-002, -7.084250e-002, -5.788642e-002, -5.675137e-002, -5.676138e-002, -4.883196e-002, -2.729611e-002, -7.243546e-003, 3.504343e-003, 7.742973e-003, 1.969412e-002, -1.094777e-003, 1.141099e-003, -1.128438e-002, 1.841262e-002, -6.202841e-002, 1.729433e-002, 6.272403e-002, 1.999346e-003, 3.096263e-003, -7.511231e-002, -6.776317e-002, -1.923547e-002, 6.660379e-003, -9.869492e-003, -5.045736e-002, -3.642319e-002, -1.921382e-002, 7.239833e-003, 4.220687e-002, 6.919202e-002, 6.918632e-002, 3.962188e-002, 1.650533e-002, 1.711453e-003, -2.455039e-002, -5.918192e-003, 8.336761e-003, -5.273305e-003, -5.052735e-002, 2.701215e-002, 2.756976e-002, -4.101604e-002, -2.760413e-003, -1.366672e-002, -8.413747e-003, -4.104685e-002, -5.544437e-002, -2.423850e-003, -1.168859e-002, -1.262486e-002, -1.093554e-002, 2.213124e-002, 6.504085e-002, 8.822820e-002, 6.836484e-002, 3.694810e-002, 1.495623e-002, -1.218118e-002, -4.135537e-002, -2.466200e-003, 2.954238e-002, -8.453585e-003, -3.024482e-002, 6.423245e-003, -1.771222e-002, -6.395814e-002, -3.299135e-002, -6.751588e-003, 2.789413e-002, -9.724737e-004, -2.639654e-002, 2.731086e-002, 2.564813e-002, 8.058352e-003, -2.019282e-002, -1.457576e-002, 1.853064e-002, 4.811291e-002, 3.949582e-002, 2.850228e-002, 1.438351e-002, -1.817078e-002, -4.211274e-002, 2.594515e-003, 2.009749e-002, 5.630446e-003, -1.183353e-002, -1.377574e-002, -4.366062e-003, 1.442368e-002, 3.068152e-002, 1.105161e-002, 1.426345e-002, 2.516553e-003, -1.195731e-002, 3.877880e-002, 4.310977e-002, 2.277065e-002, -4.409477e-003, -2.451763e-002, -1.556100e-002, 5.967701e-003, 9.703779e-003, 1.863394e-002, 1.296764e-002, -1.636381e-002, -2.567281e-002, -8.365357e-003, -2.891858e-002, 8.143488e-004, 2.258608e-003, -3.891879e-002, -5.436072e-002, -3.024471e-002, 3.290703e-002, 3.542747e-002, 4.381542e-002, -5.098968e-003, -5.296088e-002, -1.898868e-002, 1.529114e-003, 1.437070e-002, 3.263194e-002, 3.540543e-002, 1.479037e-002, 1.581707e-003, -4.611847e-004, 1.399254e-002, 1.575585e-002, -9.406743e-003, -5.158151e-003, 3.086008e-003, -2.807490e-002, 2.128239e-002, 8.666222e-003, -1.683080e-002, -3.477092e-002, -3.643867e-002, 9.329260e-003, 3.370500e-002, 7.666552e-002, 5.942690e-002, -2.789460e-003, 5.953627e-003, 4.250579e-003, 6.516479e-003, 4.332709e-002, 8.855390e-002, 6.546553e-002, 2.587061e-002, 5.940064e-003, 1.530972e-002, 2.050737e-002, 2.844771e-003, 7.788755e-003, 2.191442e-002, 2.753857e-002, 6.528209e-002},
{9.521382e-002, 5.051577e-002, 1.061156e-002, -1.488005e-002, -1.749581e-002, -2.074104e-002, -2.565427e-002, -2.975066e-002, -3.691654e-002, -2.634990e-002, 1.151164e-002, 2.836073e-002, 1.131339e-002, -9.801884e-003, -4.800310e-003, 2.581899e-002, 8.791549e-002, 1.287374e-001, 9.387478e-002, 7.186403e-002, 5.537772e-002, 4.732130e-002, 3.711716e-002, -8.851094e-003, 7.337831e-002, 2.960171e-002, -1.674394e-002, -3.894469e-002, -2.652113e-002, -3.029064e-003, -8.479265e-004, -5.558339e-003, -1.988264e-002, -1.132731e-002, 3.124868e-002, 5.518390e-002, 3.202007e-002, -2.350679e-002, -5.970404e-002, -6.500097e-002, -1.758450e-002, 3.415703e-002, 2.138565e-002, 7.775071e-003, 2.375383e-002, 6.821777e-003, 1.409197e-002, -1.770196e-002, 6.500944e-002, 6.615975e-003, -4.589189e-002, -5.957882e-002, -3.265084e-002, 1.256479e-002, 2.383484e-002, 1.410238e-002, -2.102854e-002, -1.917557e-002, 8.328310e-003, 3.748963e-002, 5.722362e-002, 4.099381e-002, 2.333585e-004, -3.823940e-002, -3.531664e-002, -1.328874e-002, -5.834907e-002, -7.582244e-002, -1.520098e-002, -2.106270e-002, -4.238973e-003, -2.751865e-002, 4.335293e-002, 1.708418e-002, -2.768549e-002, -4.375783e-002, -3.006925e-002, 1.813770e-003, 1.548784e-002, 1.942682e-003, -4.979918e-002, -6.606805e-002, -5.151549e-002, -2.836918e-002, -3.744587e-003, 2.071520e-002, 1.117714e-002, -2.180557e-002, -3.217793e-002, -2.311842e-003, -1.084997e-002, -6.442086e-002, -2.289161e-002, -2.885551e-002, -8.628824e-003, -1.499620e-002, -4.162790e-002, 6.119151e-003, 2.228322e-002, 1.540481e-002, 1.077947e-002, -1.320784e-003, -7.164805e-004, 3.561055e-003, -4.553336e-002, -5.978979e-002, -2.129636e-002, -1.561644e-004, -4.073178e-003, -1.883116e-002, -2.807557e-002, -3.715792e-002, -7.146263e-002, -7.987783e-002, -3.604874e-002, -3.895944e-003, 1.545311e-002, -7.453681e-003, 8.568223e-003, 5.321007e-003, -9.919302e-002, -7.280277e-002, -3.846478e-002, -8.202206e-003, 1.154548e-002, -2.062391e-002, -1.479967e-002, 1.024276e-002, -3.074202e-002, -3.981998e-002, -1.632945e-002, -3.615406e-002, -6.968529e-002, -8.178397e-002, -5.347318e-002, 6.769412e-003, 3.384696e-002, -1.507851e-002, -5.896190e-002, -3.292717e-002, 1.621794e-002, -4.067261e-003, 9.861941e-003, -5.124111e-003, -6.245709e-003, 2.055473e-002, -3.508646e-002, -6.067014e-002, 5.788963e-003, 4.359106e-003, 8.429570e-003, 2.532255e-002, -5.221808e-002, -5.073280e-002, 9.486055e-003, 6.106795e-003, -7.834797e-003, -2.307538e-002, -7.942327e-003, 4.335828e-002, 1.026652e-001, 7.146779e-002, -2.576125e-002, -4.873907e-002, -4.374531e-003, -2.612232e-002, -9.501256e-003, -3.452774e-002, -1.044840e-001, -8.973869e-003, 1.030044e-002, -6.911015e-002, 1.382766e-002, 4.596934e-002, 4.999390e-002, 5.141146e-002, -5.851508e-002, -4.187502e-002, 2.613733e-002, 5.399000e-003, 1.063455e-002, -4.601643e-002, -3.156189e-002, -1.779330e-003, 8.092137e-002, 1.296737e-001, 2.866352e-002, -3.728474e-002, 1.112297e-002, -3.672376e-003, -1.095106e-002, -3.172498e-002,


© ISO/IEC 2004 — All rights reserved

Copyright International Organization for Standardization
Provided by IHS under license with ISO
No reproduction or networking permitted without license from IHS
Not for Resale

1.563493e-001, 1.525357e-001, 1.307075e-001, 1.753907e-002, 2.678539e-002, -6.350125e-004, -1.523334e-002, 3.033998e-002, 3.588720e-002, 1.113217e-001, 1.324679e-001, 2.010496e-001, 5.627444e-002, -1.089666e-001, -5.265581e-002, -7.852257e-002, -6.459547e-002, 5.400457e-002, 4.993103e-002, -3.433216e-002, -2.703842e-002, 1.097734e-002, 1.516041e-002, -1.346817e-003, 1.451844e-001, 1.202502e-001, 1.066158e-001, 6.712630e-002, 6.335046e-002, -5.544888e-004, -2.320574e-002, 1.482641e-002, 4.044180e-002, 1.239996e-001, 6.843364e-002, 9.994338e-002, 1.157874e-001, 2.788462e-002, 6.032049e-002, 5.994423e-002, -6.633134e-002, -7.294552e-002, 7.591557e-003, 1.799073e-002, -2.671420e-002, -1.293481e-003, 1.202281e-002, 2.258189e-002, -7.822345e-002, -5.681721e-002, 1.327930e-002, 5.682894e-002, 5.358916e-002, 1.009339e-002, -9.734547e-003, 2.152756e-002, -6.758814e-003, 5.016837e-002, -6.043564e-002, -7.411576e-002, 2.076675e-003, 6.273619e-002, 1.083957e-001, 9.216701e-002, -1.430214e-003, -3.834369e-002, 2.259437e-002, 5.689268e-002, -2.236747e-002, -7.964361e-003, -2.150278e-003, 1.215190e-002, -1.406607e-001, -8.294461e-002, -9.962875e-003, 1.814434e-002, 9.358883e-003, -2.213538e-002, -3.433425e-002, 1.542971e-002, -2.958784e-002, 2.035821e-002, -4.472666e-002, -1.341578e-001, -8.367422e-002, -1.153619e-002, 3.635257e-002, 4.207910e-002, 7.643996e-004, -2.956152e-002, 2.123642e-002, 5.942005e-002, -1.989711e-002, 6.625986e-004, -2.087567e-003, 9.181484e-003, -9.312055e-002, -2.197661e-002, -4.921825e-003, -3.188914e-002, -3.643698e-002, -6.627027e-002, -6.154255e-002, 6.984499e-004, -3.697190e-002, -8.711032e-003, 3.942192e-002, -5.261465e-002, -7.163285e-002, -2.154941e-002, 2.551090e-002, 3.784134e-002, 1.375330e-002, -1.523019e-002, 1.756977e-002, 3.365256e-002, -1.841422e-003, 8.641902e-003, 8.672117e-003, 4.220259e-003, 1.767149e-002, 3.190734e-002, -2.677174e-002, -4.262772e-002, -4.557164e-002, -7.149875e-002, -6.592876e-002, -1.882591e-002, -2.591720e-002, -4.258529e-002, 4.106459e-002, 5.861019e-002, 2.204756e-002, 1.584471e-002, 3.885691e-002, 5.637491e-002, 3.307450e-002, -8.343896e-003, -3.684787e-003, 3.429378e-002, 2.070430e-002, 2.795367e-002, 2.126822e-002, -3.437872e-003, 5.001579e-002, 1.220915e-003, -2.633866e-002, 1.990259e-002, -1.729455e-002, -3.527481e-002, -3.073235e-002, -1.729052e-002, -1.474943e-002, -1.452649e-003, 9.918416e-003, 4.838098e-002, 5.895037e-002, 4.367602e-002, 3.856481e-002, 3.079938e-002, -4.681509e-003, -2.848045e-002, 5.617653e-004, 4.458724e-002, 4.291838e-002, 2.359931e-002, 1.368809e-002, 1.806239e-003, 3.116524e-003, -4.148898e-002, 3.853778e-002, 7.110899e-002, -1.419582e-002, 1.338055e-002, 1.734752e-002, -7.670058e-003, -4.999965e-002, 2.186635e-002, 4.727610e-002, -1.299033e-003, 2.294596e-002, 2.454149e-002, 1.235841e-002, -6.935990e-003, -2.347203e-002, -1.707851e-002, 1.041971e-002, 4.627790e-002, 3.578077e-002, 5.221598e-003, -1.999117e-002, 2.114836e-002, -4.348188e-002, -3.722933e-002, 3.218910e-002, 2.061622e-003, -9.860895e-003, 3.924846e-002, 6.232976e-004, 1.026835e-002, -4.832289e-002, -1.322782e-002, 5.551645e-002, -4.141823e-002, -4.379819e-002, -2.572222e-003, -1.870212e-003, -2.463406e-002, -3.364790e-002, -1.878188e-002, 2.108862e-003, 2.549014e-002, 1.632618e-002, -1.571002e-002, -3.601108e-002, 2.325413e-002, -5.488345e-002, -3.234461e-002, -5.208889e-002, -4.363702e-002, 4.731491e-002, 1.845257e-002, -3.183933e-002, 5.496332e-002, 8.528653e-002, -1.774902e-002, -2.035135e-002, -5.704750e-002, -6.617630e-002, -2.329184e-002, -8.179658e-003, -2.719923e-002, -3.908421e-002, -3.452307e-002, -1.880964e-002, 2.216202e-003, -3.803316e-003, -1.866881e-002, -1.427175e-002, -3.574504e-003, -1.309577e-002, -2.243849e-002, -7.593668e-002, -5.657589e-002, 3.996281e-002, 3.900505e-002, -1.031496e-002, 3.580851e-002, 4.251213e-002, -5.737089e-002, -7.286761e-002, -4.144400e-002, -3.526505e-002, -1.079313e-002, 9.184794e-003, -5.040134e-003, -3.570949e-002, -4.620452e-002, -3.887834e-002, -1.409785e-002, -2.125468e-002, -9.034791e-003, -3.008569e-003, -3.768619e-002, 3.301155e-002, -1.312758e-002, -6.126577e-002, -3.462291e-002, 2.871609e-002, 4.339937e-002, 6.294367e-003, 1.579171e-002, 5.885242e-003, -6.030678e-002, -6.814329e-002, -1.885620e-002, 1.166635e-002, 1.425491e-002, 1.327367e-002, 1.272818e-003, -2.914316e-002, -4.893209e-002, -4.794732e-002, -2.557921e-002, -2.276062e-002, 2.872468e-002, -1.020224e-002, -1.383297e-002, 5.637499e-002, 5.889456e-003, -2.230559e-002, 1.577192e-002, 6.477090e-002, 8.404430e-002, 7.454916e-002, 4.689093e-002, 3.252560e-002, -4.485225e-003, -1.216955e-002, 2.188355e-002, 4.845327e-002, 5.105829e-002, 3.132742e-002, 4.657969e-003, -2.350730e-002, -4.543822e-002, -5.279660e-002, -3.726282e-002, -1.171575e-002, 7.237105e-002, 8.801278e-003, 4.934741e-002},
{-2.628709e-001, -2.139707e-001, -1.424178e-001, -7.603737e-002, -2.186638e-002, 2.633694e-002, 5.338604e-002, 4.787818e-002, 2.050258e-002, 5.746879e-003, 2.354782e-002, 7.099150e-002, 9.417999e-002, 8.551894e-002, 6.788799e-002, 4.018639e-002, 4.475192e-003, -2.903063e-002, -4.155974e-002, -8.803772e-002, -7.875622e-002, -1.756906e-002, -1.810188e-002, -7.899321e-002, -1.175984e-001, -6.147496e-002, -7.957634e-003, 1.567302e-002, 3.737010e-002, 6.903941e-002, 9.293470e-002, 8.404023e-002, 5.085042e-002, 3.337066e-002, 3.922165e-002, 6.571036e-002, 6.374282e-002, 3.670227e-002, 1.941296e-002, -1.905414e-003, -2.350991e-002, -3.693683e-002, -2.951006e-002, -4.508638e-002, -4.990670e-002, -4.670950e-003, 1.482321e-002, -3.798067e-002, -8.260512e-002, 1.496703e-002, 8.007511e-002, 6.225703e-002, 2.647015e-002, 4.012019e-002, 7.295707e-002, 6.946965e-002, 4.413054e-002, 3.147166e-002, 3.451712e-002, 1.873098e-002, -1.447733e-002, -4.369584e-002, -4.249580e-002, -2.735499e-002, -2.577878e-002, -2.295770e-002, 7.236633e-003, 2.833415e-002, 1.059287e-002, 1.361926e-002, 2.762339e-002, 1.161815e-002, -

© ISO/IEC 2004 — All rights reserved


Copyright International Organization for Standardization
Provided by IHS under license with ISO
No reproduction or networking permitted without license from IHS
Not for Resale

1.451919e-001, -1.345939e-002, 7.076043e-002, 3.635779e-002, -5.214481e-002, -7.795180e-002, -3.756280e-002, 1.551674e-003, 4.417096e-003, 5.494483e-002, 8.674726e-002, 5.904522e-002, 9.361497e-003, -1.273356e-002, -3.441497e-002, -4.367176e-002, -5.370025e-002, -4.338326e-002, -6.278117e-003, 5.719433e-002, 5.485345e-002, 2.393358e-002, 3.240080e-002, 3.188669e-002, -1.322332e-001, -5.312799e-003, 1.168477e-001, 1.346056e-001, 1.004211e-002, -7.911929e-002, -6.238262e-002, 1.204613e-002, 5.361321e-002, 6.823888e-002, 4.942235e-003, -6.286931e-002, -5.847854e-002, -2.481503e-002, -4.631939e-003, -3.651261e-003, -3.773682e-002, -5.610757e-002, -3.003936e-002, 2.966737e-003, 1.884823e-002, 4.593452e-003, 1.798308e-002, 7.546939e-003, -6.694197e-002, -9.692893e-002, -3.874531e-002, 7.712622e-002, 6.615052e-002, -4.902180e-002, -5.538727e-002, 4.275836e-002, 6.919604e-002, -4.225654e-002, -1.254504e-001, -8.899590e-002, -1.780504e-002, 4.726589e-003, 1.262261e-002, 2.686944e-003, -2.073814e-002, -2.503251e-002, 1.328638e-003, 2.260125e-003, -2.438412e-002, -1.615368e-002, -7.169791e-003, -3.046044e-002, 1.037514e-001, 3.152018e-002, -6.901301e-002, -8.144298e-002, 3.055798e-002, -1.042816e-001, -1.407619e-001, -1.971288e-002, 2.639547e-003, -6.217139e-002, -2.234777e-002, 5.975235e-002, 5.190223e-002, 1.668923e-002, 2.999595e-002, 1.853469e-002, 1.692937e-002, 3.753648e-002, 7.078881e-002, 3.610524e-002, -3.009525e-002, -5.287905e-002, -5.670315e-002, -5.457172e-002, -2.131812e-002, 2.480763e-003, -2.907489e-003, -7.036201e-002, 9.762501e-002, -1.986357e-002, -5.039075e-002, 3.129193e-002, 3.600089e-002, 7.410951e-003, -3.805955e-003, 1.707875e-003, -3.225908e-002, -6.282316e-002, 3.638427e-002, 2.375296e-002, 6.832126e-003, 3.402165e-002, 2.511787e-002, 1.135170e-002, -9.574027e-003, -1.892536e-002, -3.807514e-002, -3.531431e-002, -3.975281e-002, -1.283159e-002, 4.896415e-002, -5.421006e-002, 8.617595e-002, -3.798476e-002, -6.454794e-002, 1.517575e-002, 4.043406e-002, 6.990692e-003, 3.969367e-003, -2.464765e-002, -2.785987e-002, -2.988370e-003, 7.903919e-002, 4.424714e-002, -1.114336e-002, 7.671103e-003, -2.113874e-002, -5.266251e-002, -2.313522e-002, 5.992270e-003, 1.727856e-002, 2.963910e-003, -7.759479e-002, 1.119288e-002, 7.196241e-002, -3.136494e-002, 5.047296e-002, -5.069832e-002, -3.989057e-002, 3.276772e-003, 2.833026e-002, -4.713860e-002, 2.249793e-002, 1.305903e-002, -7.868588e-003, 3.718962e-002, 7.701885e-002, 2.969136e-002, 1.248513e-002, 4.037449e-002, 2.314325e-002, -1.650461e-002, -1.795197e-003, -1.685761e-002, 2.787383e-002, 4.842343e-002, -6.648419e-002, 3.386445e-002, 4.507784e-002, -1.225357e-002, 4.924675e-002, 1.813872e-002, 4.050358e-002, 4.406350e-002, 3.523020e-002, -8.292680e-002, -1.403009e-002, 2.716967e-002, -5.141449e-003, -2.035790e-002, -2.163378e-002, -2.783965e-002, -5.790332e-003, 4.324099e-002, 3.031741e-002, -9.650050e-003, -1.247476e-002, -9.976459e-003, 1.623960e-002, 3.998290e-002, -8.016894e-002, -1.705000e-002, -8.772540e-003, 2.051759e-002, 5.475836e-002, 8.052999e-002, 8.004086e-002, 6.818222e-002, 4.027652e-002, -4.924357e-002, -7.665521e-002, 1.860847e-003, 2.019975e-002, 1.662684e-002, 1.591595e-002, 1.235484e-002, 1.599987e-002, 4.003582e-002, 1.809041e-002, 8.797023e-003, -1.504804e-002, 9.090396e-003, -4.189900e-004, 2.459885e-002, -1.178437e-001, -4.346448e-002, 1.672558e-002, 3.793230e-002, 5.895124e-002, 8.268616e-002, 5.396612e-002, 4.550431e-002, 2.289560e-002, -5.338542e-003, -3.106885e-002, -2.642120e-002, -1.223264e-002, -5.886221e-003, -2.720680e-003, -7.356456e-003, -1.381498e-002, 8.189387e-003, 2.073148e-002, 1.767723e-002, 4.960987e-003, 4.622754e-002, -1.857259e-002, 7.278744e-004, -8.601385e-002, 1.664208e-002, 5.153276e-002, 1.231505e-002, 2.196846e-002, 3.178358e-002, 1.071777e-002, -2.754025e-002, -2.350981e-002, -9.979005e-003, 1.120781e-002, 2.078980e-002, -1.974255e-003, -1.900940e-002, -2.691094e-002, -3.088256e-002, -2.634325e-002, -2.191603e-003, 2.184605e-002, 2.549856e-002, 2.892990e-002, 7.857181e-002, -1.929313e-002, -8.338894e-003, -3.744033e-002, 2.840604e-002, 2.785140e-002, -2.197941e-002, -1.662133e-002, -6.577242e-003, -1.063370e-003, -4.653152e-002, -5.240378e-002, -3.231769e-002, -1.502668e-002, 1.646943e-002, 1.483860e-002, -4.965136e-003, -1.685738e-002, -3.644569e-002, -3.710281e-002, -1.249028e-002, 2.557002e-002, 3.912083e-002, 3.457466e-002, 6.834500e-002, -1.328924e-002, 7.795014e-003, -4.055957e-002, 2.162904e-002, 1.602811e-002, 1.901566e-002, -3.430482e-003, -1.456079e-002, 2.201353e-002, 3.640686e-003, -1.502779e-003, 2.882810e-002, -8.343726e-003, -6.411707e-003, -7.837076e-003, -2.998224e-002, -4.808295e-002, -5.693635e-002, -4.203665e-002, -1.144483e-003, 3.187107e-002, 3.489255e-002, 1.889008e-002, 2.988514e-002, -1.433188e-002, 1.905530e-002, -2.793222e-002, 2.153608e-002, 2.576528e-002, 3.742092e-002, -4.006079e-002, -5.957607e-002, 6.660764e-003, -8.820883e-003, 2.448091e-004, 3.986299e-002, 1.848213e-002, -6.031914e-003, -1.294213e-002, -2.306284e-002, -3.175800e-002, -3.451886e-002, -1.234818e-002, 1.453233e-002, 2.581845e-002, 1.298030e-002, -1.067842e-002, -1.907005e-002, -2.376643e-002, 1.868986e-002, -1.369124e-002, 1.585425e-002, 3.289261e-002, 3.059158e-002, -5.805719e-002, -1.845612e-002, 3.870241e-002, 4.228101e-003, 2.409617e-002, 4.451258e-002, 2.071854e-002, -1.306095e-002, -1.902058e-002, -3.260297e-002, -3.138286e-002, -2.160920e-002, -4.080743e-003, -1.628678e-004, -2.586489e-003, -1.213977e-002, -2.977942e-002, -3.105863e-002, 2.990896e-003, 2.542412e-003, 2.988739e-003, 3.725009e-002, 4.348855e-002, 3.578832e-003, -4.238167e-002, -8.516477e-003, -3.821762e-003, -5.806932e-002, 1.869569e-002, 7.986184e-002, 3.458028e-002, -1.756582e-002, -1.844663e-002, -2.916493e-002, -3.323133e-002, -1.712425e-002, -7.850031e-003, -2.319133e-002, -2.247795e-002, -2.345826e-002, -2.644631e-002, 1.731021e-002, 3.151932e-002, 1.587282e-002,


© ISO/IEC 2004 — All rights reserved

Copyright International Organization for Standardization
Provided by IHS under license with ISO
No reproduction or networking permitted without license from IHS
Not for Resale

1.689777e-002, 8.468211e-002, 8.662011e-002, 1.598218e-002, -4.277144e-002, -5.570884e-003, -1.572653e-002, -8.063290e-002, -1.196530e-002, 4.335385e-002, 2.469566e-002, -1.220840e-002, -1.673714e-002, -1.402716e-002, -8.772758e-003, 9.120225e-003, 5.418367e-004, -2.753400e-002, -2.071722e-002, -1.935041e-002, -8.437504e-003, 2.804943e-002, -3.638103e-003, -9.792648e-003, 6.069776e-003, 5.507056e-002, 6.631100e-002, 1.119636e-002, -1.847873e-002, 2.646635e-002, 4.034297e-002, -4.021020e-003, 2.726320e-002, 4.775462e-002, 1.943717e-002, -1.597002e-002, -3.330635e-002, -1.242784e-002, 2.102201e-002, 4.502754e-002, 1.314030e-002, -1.594200e-002, -3.143493e-003, -6.814777e-003, -9.378615e-003, -3.419818e-003, -7.137666e-002, -6.590594e-002},
{-4.522588e-002, -3.997422e-002, -2.823672e-002, -1.826525e-002, -1.272270e-002, -4.676799e-003, -6.549362e-004, 3.652784e-003, 6.443010e-003, 2.851309e-002, 6.574659e-002, 9.686700e-002, 1.052139e-001, 9.133281e-002, 7.225964e-002, 5.491899e-002, 3.280161e-002, 4.144244e-002, 7.319640e-002, 4.452272e-002, -1.670296e-002, -1.811241e-002, -4.478799e-004, -2.838133e-002, -6.521635e-003, -1.024619e-002, -2.001294e-002, -2.703101e-002, -3.020033e-002, -2.650543e-002, -2.648302e-002, -3.739117e-002, -4.832885e-002, -3.963587e-002, -3.431451e-003, 3.163757e-002, 4.784145e-002, 4.532471e-002, 2.268026e-002, -1.073574e-002, -3.698053e-002, -5.285020e-002, -9.589801e-003, 1.291659e-002, -2.100707e-002, -2.181787e-002, -4.955035e-003, -2.090832e-002, 9.264509e-002, 4.652418e-002, -7.573201e-003, -3.503797e-002, -2.930569e-002, -9.060734e-003, -1.591108e-003, -3.675428e-002, -8.690669e-002, -8.124467e-002, -3.528946e-002, 1.634379e-002, 5.883926e-002, 7.717058e-002, 5.977777e-002, 2.711309e-002, -4.756211e-003, -6.237025e-002, -8.280284e-002, -4.387931e-002, -3.018031e-002, -1.805473e-002, -1.184608e-002, -3.011672e-002, 7.869655e-002, 7.435419e-003, -7.181057e-002, -9.113944e-002, -3.886495e-002, 3.824092e-002, 8.102317e-002, 2.993413e-002, -6.372360e-002, -7.984892e-002, -2.756248e-002, 3.095879e-002, 6.812591e-002, 6.951723e-002, 1.583930e-002, -3.304735e-002, -3.362976e-002, -1.530120e-002, -5.486946e-002, -6.744068e-002, -2.476468e-002, -2.018861e-003, -9.036163e-003, -3.350233e-002, 3.450813e-002, -9.544418e-005, -6.597092e-002, -1.212780e-001, -4.266387e-002, 1.020752e-001, 1.790174e-001, 1.227638e-001, -1.574110e-002, -8.601243e-002, -5.036337e-002, 3.468810e-002, 9.392854e-002, 8.948436e-002, 3.558103e-002, -3.355783e-002, -6.974337e-002, -4.672724e-002, -2.929384e-002, -4.419973e-002, -2.523367e-002, 5.391808e-003, -1.000926e-002, -3.832676e-002, 6.722259e-003, 2.134841e-002, 2.330435e-002, -3.193833e-002, -2.070665e-002, 9.511178e-002, 1.473770e-001, 8.410457e-002, -1.182155e-002, -8.054586e-002, -2.590220e-002, 3.639914e-002, 6.647223e-002, 6.028569e-002, 1.448617e-002, -2.292756e-002, -3.942191e-002, -4.541934e-002, -1.791478e-002, -2.340274e-003, -1.616200e-002, -1.432717e-002, -1.114685e-002, -8.057850e-003, 2.660483e-002, 6.279856e-002, 8.406316e-002, 4.519139e-002, 3.189683e-003, -3.434485e-002, -4.842072e-002, -7.366261e-002, -3.431792e-002, -1.187417e-002, 4.149332e-002, 5.593479e-002, 3.723613e-002, -2.108495e-002, -6.391362e-002, -5.403943e-002, -3.427999e-002, -3.275464e-003, 2.037947e-003, 2.227402e-002, 2.326241e-002, 3.759780e-003, 2.545036e-002, 3.981056e-002, 2.870737e-002, 6.976231e-002, 3.350976e-002, -2.246953e-002, -5.735526e-004, -6.612189e-002, -6.335602e-002, -1.003583e-001, -4.316211e-002, -7.997934e-003, -8.416466e-003, 2.077766e-002, 3.024534e-002, -2.804961e-002, -9.423140e-003, 2.589580e-002, 1.547378e-002, -4.371663e-003, 6.278802e-004, -1.712627e-002, -3.073434e-002, -4.903168e-003, 2.417275e-002, 2.959219e-002, -1.510570e-002, 5.231310e-002, 1.468320e-002, -5.377930e-002, -2.790211e-002, -1.068225e-002, 6.680299e-002, 1.754284e-002, -6.274823e-002, -1.174714e-002, 2.225096e-002, 3.119971e-002, 2.019950e-002, -1.093017e-003, 1.802229e-002, -2.637907e-002, -5.304860e-002, -1.315782e-002, 1.622761e-002, -1.284705e-002, -2.764124e-002, 8.706997e-004, 6.863603e-003, -9.058173e-003, 3.336698e-003, 5.726921e-002, 5.906059e-002, 1.711058e-002, -4.061645e-002, 1.473567e-002, 6.978946e-002, 3.950086e-002, -3.260123e-002, 2.661990e-002, 6.321005e-002, 3.263979e-002, -7.873351e-003, -3.796184e-003, -1.929700e-002, -3.260025e-002, 1.220047e-002, 2.912130e-002, 5.673130e-002, 5.358994e-002, 2.479260e-002, 2.633857e-002, 1.494397e-002, -7.535749e-003, -6.507213e-002, 1.306780e-003, 8.857943e-002, 1.014755e-001, -1.752865e-002, 3.088930e-002, 3.261657e-002, 2.383080e-002, 1.343766e-002, 5.101828e-002, 7.327188e-002, 9.379063e-004, -6.452068e-002, -1.038953e-001, -9.509536e-002, -4.274425e-002, 2.730525e-002, 2.884073e-002, 2.118083e-002, 4.405711e-003, -1.717664e-002, -2.607915e-003, 8.371058e-003, -1.179385e-002, -9.861670e-002, -1.005393e-002, 1.097796e-001, 8.030334e-002, 1.739121e-002, 2.520348e-002, -7.945445e-003, -1.668069e-002, 2.967658e-002, 4.402318e-002, 8.300493e-002, 1.726350e-002, -4.002169e-002, -8.903309e-002, -8.705183e-002, -3.748474e-002, 2.335370e-002, 1.058634e-002, -7.301779e-003, -1.907856e-002, -3.042692e-002, -3.248569e-002, 9.536614e-005, -9.479930e-003, -8.776468e-002, -7.195191e-003, 7.574046e-002, 1.950121e-002, 2.837789e-002, 6.797080e-003, -2.850990e-002, -3.915018e-002, -1.981645e-003, 3.330140e-002, 5.119959e-002, 3.872286e-002, 1.761179e-003, -3.708617e-002, -4.203527e-002, 9.835181e-004, 4.655552e-002, 3.317866e-002, -1.129695e-002, -9.551918e-003, -3.049935e-003, -3.318824e-002, -4.229757e-003, -6.401378e-003, -8.541474e-002, -1.557148e-002, 2.400049e-003, 2.901090e-003, 2.014190e-002, -8.477808e-003, -2.040885e-002, -1.810874e-002, -1.452596e-003, 3.313611e-002, 1.621003e-003, -1.526911e-002, 3.132861e-003, 4.519424e-003, 7.381730e-003, 3.335873e-002, 4.836342e-002, 9.146013e-003, -1.698786e-002, 2.541786e-002, 2.426915e-002, -2.284299e-002, -5.906269e-003, -1.064265e-002, -

© ISO/IEC 2004 — All rights reserved


Copyright International Organization for Standardization
Provided by IHS under license with ISO
No reproduction or networking permitted without license from IHS
Not for Resale

8.050320e-002, -3.896120e-002, -4.896000e-002, -2.067176e-002, 5.807825e-003, -1.114032e-003, 4.342985e-003, 2.897683e-002, 3.056191e-002, 3.055319e-003, 3.799451e-003, -6.113934e-002, -8.400075e-002, -7.345474e-002, -5.671109e-002, -3.623309e-002, -2.024372e-002, -1.843504e-002, -3.156936e-003, 5.117218e-002, 3.520619e-002, -1.264978e-003, 7.264555e-003, 2.628492e-003, -1.255531e-002, -9.272526e-003, -6.622177e-002, -2.301315e-002, -7.978946e-003, 1.674667e-002, -7.246433e-003, 7.189922e-003, 3.051673e-002, -5.268302e-002, -4.258962e-002, -4.129730e-002, -5.380418e-002, -6.660887e-002, -6.002403e-002, -4.117149e-002, -8.139234e-003, 1.443486e-002, 3.303157e-002, 6.205485e-002, 4.688696e-002, 1.708197e-002, 1.434752e-002, 2.239324e-002, 6.796146e-002, 3.430888e-002, 2.955741e-003, -1.029285e-002, -2.034469e-002, 1.623181e-002, -1.717394e-003, -1.934531e-002, 1.803773e-002, -5.739598e-002, -6.910149e-002, -1.050711e-002, 2.789323e-002, 2.252224e-002, 1.359960e-002, 2.828572e-002, 5.496251e-002, 6.100987e-002, 5.135308e-002, 5.782529e-002, 5.030163e-002, 2.046605e-002, 1.128787e-002, 1.473946e-002, 3.371881e-002, 1.933735e-003, 3.146001e-003, -2.529463e-002, -1.881386e-002, 1.620773e-002, -4.782954e-003, -2.015063e-002, 1.015132e-002, -7.241368e-003, -2.130738e-002, 3.804134e-002, 6.268515e-002, 6.972069e-002, 7.085390e-002, 8.285232e-002, 9.292799e-002, 7.589226e-002, 4.310650e-002, 3.631877e-002, 3.413370e-002, 6.590467e-003, -6.776763e-003, -5.844083e-003, -3.372375e-002, -2.638158e-002, -1.220714e-002, 7.759134e-003, 7.246539e-003, -1.016415e-002, -5.071329e-002, -5.203198e-002, -5.141411e-003, 2.930265e-003, 1.541431e-002, 6.660199e-002, 4.032003e-002, 8.144096e-003, 2.026472e-002, 3.941510e-002, 5.553404e-002, 3.752647e-002, 4.144354e-003, -2.327313e-003, 1.272255e-002, 3.865836e-003, 3.882367e-002, 2.650270e-002, -3.671247e-002, 6.046441e-003, 2.105802e-002, -1.193724e-003, -1.777398e-002, -1.410702e-002, -3.713294e-002, -9.171428e-003, 2.675697e-002, 9.961294e-003, 2.530416e-002, 3.870494e-002, -1.543181e-002, -8.559174e-002, -8.358700e-002, -4.202896e-002, -7.336980e-003, -2.114575e-002, -4.840353e-002, -3.742881e-002, 9.126859e-004, 1.178495e-002, 3.943838e-002, 2.221578e-002, -1.702819e-002, 3.070673e-002, 4.846101e-002, 2.602274e-002, -6.158940e-003, -3.223042e-002, -2.786314e-002, 4.557951e-002, 9.406019e-002, 7.939994e-002, 3.851695e-002, -6.511470e-004, -6.138546e-002, -1.356330e-001, -1.639336e-001, -1.170417e-001, -6.865855e-002, -7.210728e-002, -8.776982e-002, -6.053017e-002, -1.385248e-002, -1.779181e-002, -2.565976e-002, -2.467791e-002},
{-1.462157e-002, -2.238943e-002, -2.355357e-002, -2.293181e-002, -2.912533e-002, -3.976406e-002, -4.534497e-002, -3.875053e-002, -8.948977e-003, 1.578375e-002, 4.266579e-002, 4.375184e-002, 2.789625e-002, 1.618311e-002, 2.504461e-002, 3.401498e-002, 1.537836e-002, -2.181884e-002, -2.266659e-002, -2.528041e-002, -3.509877e-002, -9.399998e-003, -3.586610e-003, 1.498062e-002, -7.424753e-004, 7.743780e-003, 2.055995e-002, 3.639970e-002, 3.891741e-002, 1.937075e-002, 3.841229e-003, 9.179858e-003, 2.999710e-002, 2.956882e-002, 1.262752e-002, -2.644639e-002, -6.849326e-002, -7.767493e-002, -5.183538e-002, -1.815821e-002, -1.574769e-002, -4.126862e-002, -2.564795e-002, 1.367090e-002, -3.933328e-004, 8.164082e-003, 3.022112e-003, 2.983413e-002, 4.301475e-002, 5.939229e-003, -1.824230e-003, 3.886611e-002, 7.550477e-002, 6.344330e-002, 4.034554e-002, 3.201416e-002, 2.934910e-002, 1.235040e-002, -6.913785e-003, -1.320033e-002, -8.744852e-003, 2.524325e-003, 4.863475e-002, 8.274394e-002, 6.098887e-002, -1.161176e-002, -1.768336e-002, 3.152931e-002, 2.518633e-002, 2.465765e-002, -1.196124e-002, 2.768655e-002, 4.596053e-002, -1.013226e-002, -6.674587e-002, -4.510015e-002, 2.274017e-002, 3.315793e-002, -2.767749e-003, -3.373421e-002, -4.249997e-002, -3.525277e-002, -2.268705e-002, -1.641379e-002, -3.803867e-002, -5.324540e-002, -2.444421e-002, 2.393411e-002, 3.183697e-002, -1.999659e-002, -3.842078e-002, 2.602393e-002, 2.901294e-002, 2.653361e-002, -2.498084e-002, 1.135194e-002, -1.651715e-002, 9.878568e-003, -2.273720e-002, -7.265653e-002, -3.362094e-002, -2.809672e-002, -5.805757e-002, -7.831258e-002, -5.211890e-002, -2.900848e-003, 1.183384e-002, -1.722974e-002, -3.944336e-002, -2.448240e-002, 2.233680e-002, 5.903849e-002, 6.367021e-002, 2.550431e-002, -3.538188e-002, -1.884391e-002, -1.437314e-002, 2.324499e-002, -4.005444e-002, -6.027691e-003, -1.216457e-001, -5.086736e-002, -1.839887e-002, -8.340378e-002, -9.909435e-002, -7.763753e-002, -6.864735e-002, -6.788461e-002, -3.409995e-002, 1.583436e-002, 1.526797e-002, -2.907142e-002, -6.288489e-002, -4.743932e-002, 2.053563e-002, 6.763226e-002, 5.998917e-002, 1.762714e-002, -8.221871e-003, -2.184546e-002, -5.208710e-002, 3.298916e-002, -2.920893e-002, -2.469563e-004, -4.547982e-002, -3.911293e-002, 2.768522e-002, -3.641787e-003, -3.148649e-002, -8.991065e-004, 6.864208e-003, 2.317032e-002, 1.694951e-002, 3.951071e-002, 2.348108e-002, 1.583617e-002, 2.435322e-003, -2.209880e-002, 3.469664e-002, 1.124738e-001, 9.886777e-002, 2.913546e-002, -8.738346e-004, 2.223791e-002, -3.767332e-002, 5.592465e-002, 3.400485e-004, 1.782923e-002, 1.117675e-001, 1.416542e-002, 6.500582e-002, 8.473961e-002, 5.223623e-002, 5.105261e-002, 2.592455e-002, 3.243914e-002, 7.972921e-005, 4.051761e-002, 5.387121e-002, 6.366928e-002, 1.093697e-001, 2.609892e-003, 1.209562e-003, 1.037654e-001, 5.409448e-002, -1.828907e-002, 4.475140e-003, 6.211786e-002, -4.215710e-002, 1.856925e-002, -1.312558e-002, 6.035596e-003, 2.017128e-001, 1.402448e-002, 2.572601e-002, 5.508173e-002, 1.819294e-002, 2.710687e-002, 7.482097e-003, 7.337700e-003, -3.601623e-002, 4.183256e-002, 1.474016e-002, -3.879282e-003, 1.176400e-001, 4.356069e-003, -3.711087e-002, 3.601798e-002, -6.783468e-002, -6.326209e-002, 1.613341e-002, 8.379693e-002, -2.250577e-002, -3.432406e-002, -4.838734e-002, -2.462052e-002, -


© ISO/IEC 2004 — All rights reserved

Copyright International Organization for Standardization
Provided by IHS under license with ISO
No reproduction or networking permitted without license from IHS
Not for Resale

7.062792e-002, -6.873043e-002, -5.937855e-003, 2.567648e-003, -2.271442e-002, 2.002876e-002, 2.511353e-003, 2.539598e-002, 5.040819e-003, 2.042972e-002, 2.006773e-002, -6.428869e-002, -5.239985e-002, 2.736379e-002, 1.013728e-003, -4.933377e-002, -3.944976e-002, 4.785384e-002, 9.057911e-002, 7.660727e-002, 1.432736e-002, 1.718592e-002, 6.695880e-003, 1.646897e-002, -1.029828e-001, -4.246634e-002, 1.202407e-002, -3.834677e-002, -1.847736e-002, 3.164983e-003, -1.897231e-002, 1.694536e-002, 3.453944e-002, 1.600583e-002, 5.589301e-002, -4.579776e-002, -1.353233e-001, -1.676938e-001, -1.718382e-001, -1.475731e-001, -7.621583e-002, 3.966657e-003, 1.669294e-002, -7.323782e-003, 1.621723e-003, 1.337800e-003, 2.000577e-002, 3.457751e-002, 2.137197e-002, 5.405930e-002, 2.860426e-002, -4.163641e-002, 5.517812e-003, -1.303773e-002, -3.316842e-002, -6.112601e-003, 1.765430e-002, 9.724088e-003, 5.150721e-002, 5.698534e-002, -6.178823e-003, -5.495157e-002, -7.555139e-002, -6.951005e-002, -3.574924e-002, -1.920431e-003, -1.693149e-002, -5.127627e-002, -2.335282e-004, -2.613636e-003, 2.258295e-002, 1.597912e-002, 9.875848e-002, 1.029415e-001, 2.158356e-002, -2.878503e-002, 1.724108e-002, -1.078076e-002, -2.234093e-002, -7.794445e-003, -5.689842e-003, 5.260457e-003, -1.788885e-002, 2.972771e-002, 4.429072e-002, 2.089572e-002, 7.587742e-003, 4.321986e-003, 1.604950e-002, 2.015118e-002, -2.644437e-002, -4.767481e-002, 7.762071e-003, -1.308389e-002, 6.340237e-003, -1.596110e-002, 1.125525e-001, 4.896580e-002, -2.873214e-002, -7.614380e-004, 2.919979e-002, 9.605704e-003, 1.912657e-002, 3.230535e-002, -1.559460e-002, -2.659887e-002, -4.502788e-002, -2.621339e-002, 8.840181e-003, 2.419999e-002, 1.764897e-002, 1.379330e-002, 2.683291e-002, 3.172326e-002, -7.805045e-003, -3.163784e-002, 2.321994e-002, -1.705366e-002, -2.272367e-002, -2.684618e-002, 2.134459e-002, -4.746622e-002, -4.387080e-002, -6.282984e-003, -7.331988e-003, 1.495104e-003, 4.509587e-002, 6.944747e-002, -1.161013e-002, -6.760293e-002, -4.667028e-002, -2.644992e-002, -9.781824e-003, 1.352704e-002, 2.473167e-002, 3.343374e-002, 5.155737e-002, 6.024654e-002, 2.436911e-002, -2.063876e-002, 2.796311e-002, 3.926138e-003, -1.818742e-002, 6.503248e-003, -6.079135e-002, -5.399887e-002, -3.552822e-002, -6.339048e-002, -5.825795e-002, -6.822025e-003, 3.793150e-002, 5.480566e-002, -2.708549e-002, -7.695060e-002, -7.633132e-002, 3.117661e-003, 1.079796e-002, 5.449047e-003, 1.684331e-002, 2.943806e-002, 4.270725e-002, 3.761225e-002, 1.708501e-004, -2.336082e-002, 3.460486e-002, 1.882699e-002, 6.660486e-006, 3.767249e-002, -1.165909e-002, 5.231071e-002, 1.673705e-002, -8.267815e-003, -1.534644e-002, -6.340036e-003, -1.045235e-003, 1.488687e-002, -2.070506e-002, 5.376330e-003, -8.943224e-003, 2.284803e-002, 3.920390e-002, -1.106072e-002, -4.541051e-002, -4.805594e-002, -3.108598e-002, -1.340032e-002, -3.285591e-002, -3.207295e-002, 2.668571e-002, 1.563840e-002, 1.135470e-002, 2.896553e-002, 7.922796e-002, 1.132359e-001, 3.160441e-002, 4.386871e-002, 7.544290e-003, -4.468615e-002, -6.509221e-002, 3.450784e-004, 7.215411e-003, 3.905799e-002, 6.505099e-002, 7.012092e-002, 6.871027e-002, 8.591507e-003, -6.663953e-002, -8.957021e-002, -6.186399e-002, -3.268304e-002, -3.679699e-002, -3.642604e-002, 1.279734e-002, -3.928097e-003, -6.372997e-003, -1.410988e-002, 7.547523e-002, 7.368631e-002, -6.440833e-003, -4.507321e-002, 8.408212e-003, 1.397426e-002, -3.822693e-002, -2.918300e-002, -3.455920e-002, -1.193708e-002, 5.909698e-002, 9.614135e-002, 6.857698e-002, 4.144761e-002, -1.835927e-002, -4.740023e-002, -2.379151e-002, -4.245576e-003, -2.679216e-002, -3.162156e-002, -4.115709e-003, -2.081522e-002, 1.255296e-002, -1.981564e-002, -5.101931e-002, -2.718610e-002, 2.424034e-002, 6.627299e-002, 8.315923e-002, 6.244534e-002, 2.626493e-002, 5.832417e-002, 5.505867e-002, 1.252715e-002, 2.308774e-002, 4.787038e-002, 1.292681e-002, -8.496221e-003, 1.130909e-002, 2.467245e-002, 4.578887e-002, 4.013673e-002, -7.303286e-003, -2.370117e-002, -1.586347e-002, -2.847786e-002, 2.335839e-002, -3.429432e-002, -1.794463e-001, -1.467544e-001, -6.045014e-002, 1.111019e-002, 3.070547e-002, 2.889228e-002, 6.000067e-004, 1.683400e-002, 6.389259e-003, -4.293817e-002, -5.994816e-002, -5.864387e-002, -7.416830e-002, -8.813082e-002, -2.565562e-002, 5.598055e-002, 9.626099e-002, 7.677696e-002, 1.460807e-002, -6.187754e-003, -2.751651e-002, -3.503121e-002, 9.762856e-004, -3.269433e-002},
{1.002176e-001, 7.941744e-002, 4.117034e-002, 1.458507e-002, -1.978842e-003, -1.746719e-003, 1.513746e-002, 1.175775e-002, -1.502399e-003, -3.034289e-002, -4.952017e-002, -3.953249e-002, -2.319332e-002, 1.191711e-003, 2.021777e-002, 3.175532e-002, 4.964090e-002, 5.348413e-002, 1.813712e-002, -3.078040e-002, -1.371475e-002, -2.983317e-003, -5.866739e-003, 1.030882e-002, 4.087036e-002, 4.129410e-002, 1.616108e-002, -9.339458e-003, -2.796503e-002, -3.668638e-002, -1.866912e-002, -1.764664e-003, 2.648441e-004, -2.594637e-002, -4.319728e-002, -4.106592e-002, -2.539298e-002, 2.970110e-003, 1.711023e-002, 1.855982e-002, 1.771279e-002, 2.754231e-002, 1.567123e-002, -3.270203e-002, -1.726743e-002, -8.131835e-003, -4.361605e-003, 2.549969e-003, -8.188911e-002, -6.323701e-002, -3.356395e-002, -2.047904e-002, -3.252301e-002, -4.500359e-002, -2.834553e-002, 1.484149e-002, 3.942907e-002, -2.110763e-004, -3.094888e-002, -4.040180e-002, -2.062578e-002, 2.420414e-002, 6.217445e-002, 5.583004e-002, 5.158401e-003, -2.480441e-002, -6.568063e-003, -2.717650e-002, -1.873414e-002, -1.339278e-002, 4.317858e-003, -1.114067e-003, -4.675152e-002, -1.411447e-002, 3.101141e-002, 5.440115e-002, 3.167409e-002, -1.710157e-002, -2.219186e-002, 3.359395e-002, 6.961118e-002, 1.658863e-002, -3.374894e-002, -5.407425e-002, -3.047473e-002, 3.154229e-002, 7.721230e-002, 8.891749e-002, 4.193270e-002, -2.143781e-002, -4.368902e-002, -2.317154e-002, -7.919906e-003, -1.310783e-002, -8.288775e-003, -9.627340e-003, -

© ISO/IEC 2004 — All rights reserved


Copyright International Organization for Standardization
Provided by IHS under license with ISO
No reproduction or networking permitted without license from IHS
Not for Resale

2.916218e-002, -3.755065e-002, -2.800937e-003, 6.956714e-002, 5.951238e-002, -4.049610e-002, -6.275338e-002, 2.055165e-002, 6.083111e-002, -7.759246e-003, -4.831162e-002, -5.944842e-002, -4.064886e-002, -8.861031e-003, -6.440318e-004, 2.664609e-002, 3.919842e-002, 1.634133e-002, -3.288126e-002, -2.187314e-002, 5.353882e-003, 1.135370e-002, -1.663057e-002, -1.161959e-002, 3.463358e-002, -4.857678e-002, -1.356992e-001, -6.221611e-002, 2.972434e-002, -7.429046e-002, -8.209631e-002, 2.472016e-002, 3.561773e-002, -2.806965e-002, -2.388693e-002, 2.569705e-002, 2.199610e-002, -4.792624e-004, -2.304087e-002, -3.081171e-002, -1.801878e-002, 3.485870e-003, -4.418038e-003, -1.726766e-002, -1.611318e-003, 4.252243e-002, -1.084380e-002, -9.025042e-003, 6.430460e-002, 6.262583e-002, -7.088229e-002, -1.508173e-001, -1.032738e-002, -1.108264e-001, -1.211188e-001, -7.433106e-004, -1.842850e-002, -3.432144e-002, 7.841836e-002, 6.937454e-002, 6.562527e-004, -3.266267e-002, -3.780668e-002, -2.120138e-002, -4.673669e-003, -1.918548e-002, -1.598755e-003, 1.105052e-002, -1.872148e-003, 3.911405e-002, -6.355736e-003, 3.618576e-002, -6.783261e-002, 6.887001e-002, 6.049019e-002, -1.787872e-002, 1.089302e-001, 2.170632e-002, -2.371296e-002, 2.751694e-002, -4.009030e-002, -1.400578e-002, 5.323305e-002, -2.700151e-002, -4.568519e-002, 5.145496e-003, 4.546759e-003, -2.674408e-002, 3.826283e-003, -2.323644e-002, -1.455825e-002, 2.046750e-002, -9.831910e-003, 4.232932e-003, -1.010572e-002, 3.790836e-002, 4.385639e-002, 7.275750e-002, 6.991061e-002, 8.444662e-002, 1.936611e-001, 1.091988e-001, 6.674042e-002, 3.433704e-002, -1.681590e-002, -8.512946e-003, 8.642610e-003, -9.434805e-003, -4.528974e-002, -9.323422e-002, -5.165294e-002, 5.017581e-003, 4.120089e-002, -9.599797e-003, -2.885032e-003, 5.970403e-002, 3.419050e-002, 2.117956e-002, 2.332602e-002, 2.322928e-002, 2.565722e-002, 2.118427e-002, 2.484802e-002, 2.919873e-002, 6.179300e-002, 3.016432e-002, 8.259122e-002, 5.155614e-002, -3.453348e-002, 2.791133e-003, 5.307286e-002, 5.711793e-002, 6.199849e-003, -5.880475e-002, -5.620951e-002, -1.653684e-002, -2.354019e-002, -2.593632e-002, 2.940587e-003, 4.378739e-002, 1.430693e-002, -1.871821e-002, 1.076552e-002, -1.810608e-002, 2.179371e-002, -1.464534e-002, -5.090138e-002, -5.317755e-002, -4.847462e-002, -4.610060e-004, 5.446603e-002, 6.612461e-002, -4.103540e-002, -1.986760e-002, 6.248959e-002, 9.020263e-002, 6.254938e-002, 2.996058e-002, 1.293587e-002, 2.276518e-002, 4.096832e-002, 4.319793e-002, 3.625245e-002, 3.832155e-002, -1.497988e-002, -4.381695e-002, -6.779698e-003, -1.960378e-002, -1.327455e-002, -6.888407e-002, -8.696998e-002, -8.595900e-002, -7.674551e-002, 4.667665e-003, 2.845387e-002, 6.002740e-002, 5.736558e-003, -4.636947e-002, -5.685492e-003, 5.609230e-002, 6.578581e-002, 5.495331e-002, 4.247851e-002, 4.728504e-002, 5.693711e-002, 5.747415e-002, 4.461010e-002, 3.080961e-002, -1.468826e-002, -3.323350e-002, 1.827908e-004, -2.861940e-003, -6.578829e-002, -6.483451e-002, -5.112118e-002, -7.100993e-002, -4.772691e-002, -2.088647e-003, 6.870000e-003, 2.738182e-002, 5.823606e-002, -2.647618e-002, -6.000451e-002, -5.042978e-002, -2.519591e-002, -2.432166e-002, -2.648445e-002, -3.158597e-002, -1.977574e-002, 9.220756e-003, 2.343182e-002, 5.752560e-003, -2.104946e-002, -1.166122e-002, 5.709489e-003, 2.809610e-003, -3.643488e-002, 2.334785e-002, 2.191671e-002, -2.564415e-002, -1.032486e-002, -1.521128e-003, -1.197797e-002, -2.351008e-002, 4.401835e-002, 4.674366e-002, -4.197860e-002, -1.171931e-001, -1.302436e-001, -1.271377e-001, -1.288369e-001, -1.149860e-001, -7.230873e-002, -1.366754e-002, 6.942247e-003, -2.066103e-002, -1.639938e-002, 3.487969e-003, -1.273743e-002, 1.844753e-004, 5.288577e-002, 7.951398e-002, 4.845727e-002, 1.229550e-002, 1.462899e-002, -1.460592e-002, -3.275827e-002, -4.045448e-002, -3.907382e-003, 5.817605e-002, 6.057384e-002, -4.184646e-003, -9.986937e-002, -1.417769e-001, -1.430535e-001, -1.081077e-001, -4.060904e-002, 1.157701e-002, 4.099978e-004, -3.660246e-002, -4.201181e-003, 1.818226e-002, -2.836281e-002, -8.571037e-003, 1.035393e-001, 7.523109e-002, -6.683820e-003, -1.090270e-002, 1.708728e-002, -3.447322e-002, -5.734722e-002, -4.038328e-002, -2.740608e-002, 6.601232e-003, 5.598726e-002, 1.265721e-001, 9.956221e-002, 4.952688e-002, 2.827648e-002, 3.567622e-002, 5.742827e-002, 5.090652e-002, -5.534015e-003, -4.549329e-002, 1.602989e-003, 2.027199e-002, -3.979750e-002, -7.357572e-003, 6.274849e-002, 1.635092e-002, -4.130210e-002, 8.911427e-003, 5.500766e-002, 1.259309e-002, -1.412625e-002, -1.641164e-002, -2.900911e-002, -3.243827e-002, -2.407633e-002, 8.507677e-002, 1.187992e-001, 1.103567e-001, 9.731631e-002, 8.127874e-002, 6.030959e-002, 2.877227e-002, -2.217120e-002, -3.852805e-002, 5.620216e-003, 1.270866e-002, -2.359425e-002, 1.140570e-002, 2.700081e-002, 1.486183e-002, -9.407335e-004, -1.938089e-002, 8.749864e-003, 4.320874e-002, 6.417685e-003, -6.080350e-002, -4.817322e-002, 1.158270e-002, -2.128836e-002, 2.733200e-002, 2.474116e-002, 4.658719e-003, -4.323624e-003, -1.213113e-002, -1.350229e-002, -1.451299e-002, -3.276049e-002, -2.460758e-002, 7.136099e-003, 1.221029e-002, 1.519492e-002, 3.301524e-002, 2.661965e-002, 3.944553e-002, 1.780382e-002, -5.762503e-002, -2.142598e-002, 3.759060e-002, 4.250258e-003, -3.326798e-002, 2.224025e-003, 5.177472e-002, 2.204270e-002, 1.575798e-002, 4.931751e-005, -3.899842e-002, -5.986275e-002, -5.918442e-002, -4.445316e-002, -2.660642e-002, -1.938061e-002, -8.170967e-004, 1.430276e-002, -3.530082e-003, 2.426056e-002, 1.621086e-002, 2.970012e-002, 3.750610e-002, 1.414460e-002, -1.717727e-002, 4.393029e-003, -2.714541e-004, -3.993826e-002, -1.055820e-002, 5.942761e-002, 7.056344e-002, 1.773585e-002, -7.946982e-004, 1.323569e-002, -8.294333e-003, -4.926765e-002, -5.554422e-002, -3.599024e-002, -5.385808e-003, 1.526549e-002, 3.621786e-002, 4.703856e-004, -1.624997e-002, 2.912361e-003, -2.446589e-002,


--`,,```,,,,````-`-`,,`,,`,`,,`---
© ISO/IEC 2004 — All rights reserved

Copyright International Organization for Standardization
Provided by IHS under license with ISO
No reproduction or networking permitted without license from IHS
Not for Resale

4.398219e-002, 2.803198e-002, -1.557788e-002, -6.273465e-002, -5.773145e-002, -5.187217e-002, -7.072287e-002, -3.997154e-002, -3.917761e-003, 2.899622e-002, 2.307291e-002, 1.330567e-002, 3.151572e-002, 4.095201e-002, -4.052630e-003, -2.385039e-002, -7.421454e-003, 2.189002e-002, 4.724534e-002, 5.549043e-002, -5.839377e-003, -2.362949e-002, -2.216625e-002, -6.313980e-002},
{1.185946e-001, 1.251926e-001, 1.156223e-001, 9.018977e-002, 5.827942e-002, 4.886073e-002, 5.213961e-002, 6.670826e-002, 6.624860e-002, 4.909887e-002, 1.029251e-002, -1.548617e-002, -9.409903e-003, 1.560379e-002, 7.813414e-004, -4.440479e-002, -1.087815e-001, -1.559595e-001, -1.314677e-001, -5.382064e-002, -1.847617e-002, -2.106878e-002, -3.825059e-003, -1.571122e-003, 2.865801e-002, 1.343851e-002, 4.069682e-003, -4.554311e-003, -2.175643e-002, -2.852970e-002, -3.004242e-002, -1.448243e-002, -7.757515e-003, 2.493949e-003, -1.962663e-003, 5.528729e-003, 5.178242e-002, 1.008973e-001, 9.797748e-002, 6.162703e-002, 2.143302e-002, -8.361568e-004, -6.622327e-003, 1.303188e-002, -3.155535e-003, -1.109815e-002, -4.847007e-003, -7.768741e-003, 4.770920e-002, -1.261568e-002, -6.315816e-002, -7.569269e-002, -8.696214e-002, -1.005782e-001, -1.212853e-001, -1.058460e-001, -7.748839e-002, -5.022143e-002, -2.050272e-002, 2.216529e-002, 5.956826e-002, 5.110278e-002, -1.608299e-003, -4.189004e-002, -4.246299e-002, 5.672328e-003, 8.186243e-002, 8.832892e-002, 2.135275e-002, -1.028940e-002, -6.796263e-003, -1.915482e-002, 1.009882e-001, 3.434559e-002, -3.349652e-002, -5.100535e-002, -4.045366e-002, -4.882628e-002, -6.480518e-002, -6.273076e-002, -4.246630e-002, -6.198515e-002, -4.860937e-002, 5.220479e-003, 7.018050e-002, 8.120293e-002, 3.808332e-002, -1.119718e-002, -4.985957e-002, -5.700860e-002, -1.723160e-002, 3.563367e-002, 1.861026e-002, -1.303528e-002, -8.787705e-003, -2.550011e-002, 2.320124e-002, -6.452107e-002, -1.199793e-001, -7.562290e-002, 1.101626e-002, 4.315962e-002, 4.229526e-002, 2.942524e-002, 4.304481e-003, -7.591057e-002, -1.247686e-001, -8.612094e-002, -1.251244e-002, 3.820400e-002, 4.407373e-002, 2.701500e-002, 3.149175e-002, 1.972976e-002, -3.178200e-002, -5.964519e-002, -2.486847e-002, -1.341348e-002, 1.246422e-002, 1.168086e-002, 1.575972e-002, 6.971164e-003, -2.027373e-002, 3.527898e-003, 4.178885e-002, 4.068897e-002, 1.949758e-002, 3.114371e-002, 7.594232e-002, 2.646262e-002, -3.336537e-002, -2.703633e-002, 3.575407e-003, 2.646485e-002, -1.886694e-002, -5.631904e-002, -1.924176e-002, 5.599997e-002, 7.153996e-002, -1.209540e-002, -2.206931e-002, 7.125237e-003, 3.124775e-002, 5.085109e-002, -8.473319e-002, -5.159415e-002, 2.301220e-002, 1.163637e-001, 4.755103e-002, -2.953789e-002, -9.757218e-002, -4.329265e-002, 7.742502e-002, 1.056624e-001, 4.615251e-002, -3.184747e-002, -2.385535e-002, 2.683710e-002, 1.368406e-002, 9.851220e-003, 1.372431e-003, 2.197200e-002, 6.016363e-002, 3.532352e-002, 3.768832e-002, 4.091547e-002, 2.899182e-002, 4.514914e-002, 1.367230e-001, 5.005498e-002, -9.698373e-003, 8.096398e-002, 3.451465e-002, 1.911433e-002, 3.678709e-003, 1.933552e-002, 3.921962e-002, 7.857364e-002, 8.974618e-002, 9.431218e-002, 1.343013e-002, 4.663953e-002, -9.724652e-004, 4.522470e-002, 5.233667e-002, 1.304342e-002, -6.764147e-003, -1.654258e-002, -6.122521e-003, -1.125002e-002, -4.170391e-002, 7.048480e-003, -2.069068e-002, -4.027565e-002, -1.096117e-001, -6.032940e-002, -6.952696e-002, -6.476443e-003, 4.009166e-002, 3.481816e-002, -7.871533e-002, -1.234786e-001, -5.966659e-002, -1.008904e-002, 6.752438e-003, 1.204714e-002, -3.938507e-002, 1.176501e-002, 4.766919e-002, -4.269331e-002, -5.852516e-002, -5.425933e-002, -2.561147e-002, -9.569484e-003, -3.925928e-002, -2.847836e-002, -2.563000e-002, -6.180232e-002, -8.559427e-002, -5.361294e-002, -8.323166e-002, -2.221314e-002, 2.772383e-002, 3.456411e-002, -5.370551e-002, -1.427084e-001, -1.361450e-001, -7.712761e-002, -8.766557e-003, 9.858244e-003, 4.231883e-003, -9.078137e-003, -3.629611e-002, -5.152037e-002, -2.854588e-002, -7.436074e-003, -9.522486e-003, 1.258673e-002, -1.504669e-002, -4.356128e-002, 5.600575e-002, -1.876491e-002, -1.933065e-002, 1.285250e-002, -3.486308e-002, -2.996783e-002, 1.606670e-002, 1.287660e-002, -4.760315e-003, -2.930221e-002, -8.656922e-002, -3.356186e-002, 5.827256e-002, 1.148530e-001, 1.278189e-001, 1.134800e-001, 5.558038e-002, 8.205582e-003, 1.264142e-002, 4.518372e-003, -4.228209e-002, 1.641251e-003, 1.507419e-004, -1.768838e-002, -1.930868e-002, -5.920559e-002, 8.731425e-003, 5.757211e-002, -1.499727e-002, -3.526469e-002, 3.619973e-003, -2.348689e-002, 2.526733e-003, 7.632470e-002, 7.631082e-003, -4.296337e-002, -6.000418e-003, 5.415048e-002, 9.693176e-002, 1.035598e-001, 5.455546e-002, 2.638374e-002, 4.676602e-002, 1.583143e-002, -4.553976e-002, -1.225378e-002, -7.748494e-003, 1.105993e-002, -7.462326e-002, -4.348379e-002, 6.583795e-002, 6.259662e-002, -2.067568e-002, -1.973284e-002, 5.695805e-003, -5.172950e-002, -3.998390e-002, 7.916305e-002, 1.028438e-001, 1.902302e-002, -3.152494e-002, -1.783583e-002, 1.112767e-002, 2.946283e-002, 1.690732e-002, 2.086398e-002, 5.027134e-002, 3.264239e-002, -1.734956e-002, -9.547863e-003, -1.799892e-002, 3.482721e-002, -4.101081e-002, 3.652670e-002, 5.579203e-002, 2.163014e-002, -3.305415e-002, -6.569559e-003, 2.287521e-002, -3.778079e-002, -5.978953e-002, -9.793183e-003, 8.464604e-002, 8.789679e-002, 1.923643e-002, -2.744923e-002, -3.409599e-002, -2.269928e-002, -1.258200e-002, 7.920509e-003, 4.289837e-002, 4.481953e-002, 1.079585e-002, -1.213229e-003, -6.981187e-003, 2.142618e-002, 1.456602e-002, 3.054832e-003, -2.477002e-002, 8.634786e-004, -2.393183e-002, -7.044442e-003, 3.074679e-002, 2.910541e-003, -1.281082e-002, -2.069760e-002, -2.094604e-002, 2.771447e-002, 4.278088e-002, 2.148313e-002, 4.485045e-003, -4.344500e-003, -7.919108e-003, 2.767830e-003, 2.348857e-002, 3.460257e-002, 3.457898e-002, 1.312356e-002, -9.262579e-004, -3.706876e-002,

© ISO/IEC 2004 — All rights reserved
--`,,```,,,,````-`-`,,`,,`,`,,`---


Copyright International Organization for Standardization
Provided by IHS under license with ISO
No reproduction or networking permitted without license from IHS
Not for Resale

1.401222e-002, -4.541752e-002, -1.449015e-002, 5.197222e-002, 1.438248e-002, 5.682688e-004, -9.684858e-004, 5.681814e-003, 5.480575e-002, 5.532065e-002, 7.436132e-003, -3.914583e-002, -1.205506e-002, 1.132578e-002, 2.123741e-002, 1.322792e-002, 6.271580e-003, 4.456773e-003, 7.946742e-003, 2.679721e-002, 4.381316e-002, 1.882412e-002, 2.157952e-002, -5.191950e-002, 3.878906e-002, -2.304619e-002, 1.859755e-002, 4.068592e-002, 5.119726e-003, -3.616181e-003, -1.691158e-002, -1.803225e-002, 2.252836e-003, 1.704076e-002, 3.258153e-002, -1.739351e-002, -3.530368e-002, -2.386055e-002, -1.261262e-002, -1.357988e-002, -2.756121e-002, -2.584368e-002, -1.397557e-002, 1.784593e-002, 4.023836e-002, 1.313085e-002, 3.860375e-002, -1.467507e-002, 7.231561e-002, 8.019907e-003, 1.027342e-003, 3.410131e-003, 3.429556e-002, -1.591366e-003, -2.745887e-002, 8.575949e-003, 1.448219e-002, -1.558679e-002, -2.874413e-004, -1.036595e-002, -1.439791e-002, -1.118480e-002, -1.676926e-002, -2.019369e-002, -2.759750e-002, -2.536356e-002, -1.375419e-002, 1.683325e-002, 2.154015e-002, -1.020345e-002, 3.266714e-002, 1.785332e-002, 6.190270e-002, -5.729911e-003, -3.966704e-002, -2.148908e-002, 1.322796e-002, -7.709580e-003, 1.249568e-003, -1.460034e-002, -3.607277e-002, -1.028586e-002, -1.944769e-003, -2.340115e-002, -1.583452e-002, -2.222435e-003, -5.519101e-003, -1.973727e-002, -2.482159e-002, -1.579428e-002, -1.287342e-002, 7.137103e-003, -8.705582e-003, -4.240229e-002, 3.813811e-003, -8.107705e-004, 2.987282e-002, -3.463267e-002, -5.068338e-002, -1.929174e-002, 2.107013e-002, 3.179780e-002, 5.852904e-002, -1.253735e-002, -9.689823e-002, -4.274419e-002, 5.696002e-003, -1.256941e-002, -1.284620e-002, 1.148556e-002, 1.072124e-002, -2.038787e-002, -2.445539e-002, -2.303917e-002, -1.844045e-002, 7.114626e-004, -1.524351e-002, -3.751692e-002, -6.455382e-004, -2.869792e-002, 3.143786e-002, 4.676730e-003, 1.172466e-003, 2.182084e-002, 1.492440e-002, 6.141758e-004, 2.847673e-002, -1.579605e-002, -6.267367e-002, -3.600980e-002, -7.010253e-003, -1.224598e-002, 2.518966e-003, 1.778684e-002, 1.733786e-002, -1.443372e-002, -1.893781e-002, -2.558142e-002, -1.634309e-002, -8.681707e-003, -1.223519e-002, 1.300675e-002, 1.443771e-002, -6.652893e-002},
{-3.945363e-002, 2.014393e-002, 4.797053e-002, 1.308022e-002, -4.681180e-002, -6.075794e-002, -5.092864e-002, -9.855986e-003, 5.280744e-002, 9.608383e-002, 6.142538e-002, 5.804724e-004, -2.592781e-002, -6.633535e-003, 4.487091e-002, 1.011041e-001, 1.355607e-001, 1.285047e-001, 8.648895e-002, 8.793688e-002, 6.853077e-002, 2.412812e-002, 5.279998e-002, 4.959419e-002, -1.235523e-001, -6.786952e-003, 7.794502e-002, 6.052227e-002, -1.896681e-002, -7.467494e-002, -8.546451e-002, -5.037496e-002, 1.072036e-002, 6.975358e-002, 4.624980e-002, -2.826468e-002, -7.884719e-002, -1.018806e-001, -7.898324e-002, -3.433947e-002, 1.329594e-002, 1.910437e-002, -3.177370e-003, 1.296995e-002, 3.750618e-002, 2.629811e-003, 3.641683e-002, 3.236783e-002, -7.974373e-002, 3.825935e-002, 1.304082e-001, 1.065333e-001, -4.717496e-003, -9.539331e-002, -1.199024e-001, -9.273455e-002, -2.941176e-002, 6.356517e-002, 1.149622e-001, 9.847129e-002, 4.391635e-002, -3.065163e-002, -8.683487e-002, -8.947525e-002, -4.623524e-002, -1.248190e-002, -6.119238e-002, -7.653289e-002, -1.583375e-002, -1.411811e-002, 8.165609e-003, 1.039210e-002, -1.354407e-002, 3.309487e-002, 9.914205e-002, 7.906641e-002, -3.296706e-002, -9.453270e-002, -1.033959e-001, -8.790010e-002, -4.201127e-002, 1.827761e-002, 5.456466e-002, 3.820326e-002, 8.623900e-003, -3.065889e-002, -5.366320e-002, -5.819190e-002, -3.285505e-002, 1.871439e-002, 2.248758e-002, -5.775976e-002, -4.476235e-002, -2.190860e-002, -1.101968e-002, -7.005782e-003, 1.411382e-002, 2.461515e-002, 4.019141e-002, 1.417962e-002, -6.297103e-002, -4.273900e-002, -1.103695e-003, 5.367267e-003, 6.197003e-003, 7.362286e-003, -4.964880e-003, 3.168659e-003, 1.496066e-002, 2.021642e-002, 7.400171e-003, -8.302573e-003, -3.104948e-002, -3.105711e-002, -8.101173e-004, 4.280187e-003, -1.284035e-002, -2.068751e-002, -1.006515e-002, -3.478727e-002, -6.595306e-003, 3.391064e-002, 6.267892e-002, 1.321174e-002, -7.957134e-002, -4.621947e-002, -3.389633e-003, 1.672878e-002, 2.913783e-002, 1.839526e-002, 2.506121e-002, 5.799516e-002, 5.272133e-002, 4.756050e-002, 5.770205e-002, 6.050555e-002, 4.551533e-002, 2.674296e-002, 5.422031e-003, -1.477989e-002, -8.742578e-004, -2.918868e-002, -1.769595e-003, -3.259908e-002, -4.343389e-002, 1.872498e-002, 6.882774e-002, 5.185588e-002, -3.084602e-002, -8.317911e-002, -1.027150e-001, -7.164675e-002, 2.307710e-002, 1.296461e-002, 2.336928e-002, 5.431868e-002, 2.896287e-002, -8.473831e-003, -2.322780e-002, -4.868786e-002, -2.883004e-002, 2.021793e-002, 3.165571e-002, -2.144086e-002, 2.931457e-003, -5.927128e-003, 1.039428e-003, 1.470745e-002, -4.873482e-002, 2.614687e-002, 2.322082e-002, 5.491096e-003, 1.886900e-002, -6.711897e-004, -3.945118e-002, -3.311821e-002, 6.950087e-002, -1.647250e-002, -2.236363e-002, 2.943834e-002, -3.510178e-002, -9.364765e-002, -2.332520e-002, 7.975652e-003, -5.642782e-002, -6.985595e-002, -3.589656e-002, -5.951781e-002, -1.692915e-002, 2.029139e-002, -1.083069e-002, 2.105582e-002, -1.171053e-001, -2.673867e-002, -3.326927e-002, -9.197445e-002, 4.904393e-002, 9.125404e-002, 6.121743e-002, 6.079162e-002, 6.130793e-002, -6.138756e-002, -9.578618e-002, -7.589018e-002, -4.421826e-002, -5.373974e-002, 1.049733e-002, 2.303871e-002, 4.909186e-002, 3.937119e-002, -5.143865e-003, -4.658507e-002, 5.601239e-003, -6.697777e-003, -5.880583e-002, -2.335529e-002, -6.301773e-002, -2.402486e-002, -4.048288e-002, -6.638443e-002, 4.304524e-002, 3.511510e-002, 4.530038e-004, 1.774505e-002, 1.509630e-002, -3.816618e-002, -7.908340e-002, -4.495873e-002, -9.266780e-003, 3.414703e-002, 3.134302e-002, -1.647656e-002, -1.988122e-003, 6.863226e-002, 8.676349e-002, 5.667567e-002, 7.924321e-002, 2.436838e-002, -2.457744e-002, -2.912568e-002, -


© ISO/IEC 2004 — All rights reserved

Copyright International Organization for Standardization
Provided by IHS under license with ISO
No reproduction or networking permitted without license from IHS
Not for Resale

1.167317e-002, 3.219550e-002, 1.035687e-002, -8.888197e-003, 2.024609e-002, 8.339675e-005, -1.683110e-002, -1.644769e-002, -2.035010e-002, -1.510077e-002, -5.693686e-002, -4.006616e-002, 2.264775e-002, 6.548336e-002, 4.806581e-002, -7.747623e-003, -6.090246e-002, -3.362590e-002, 3.229459e-002, 4.261098e-002, 5.918038e-002, 2.806944e-002, 3.321839e-002, -2.156373e-002, -1.798557e-003, 3.229086e-002, 5.018554e-003, -6.260437e-003, 1.185140e-002, 1.188598e-002, 4.251263e-003, -5.042785e-003, -2.524643e-002, -3.953233e-002, 1.118369e-002, -4.093513e-002, -5.830576e-002, -3.893917e-002, -3.240057e-002, -5.843936e-002, -9.079778e-002, -5.654144e-002, 1.703483e-002, 3.020143e-002, 1.038564e-002, 8.619898e-003, 5.354526e-002, 7.306291e-003, 3.215646e-002, 2.978366e-002, -1.661254e-002, -2.404434e-002, 2.200149e-002, 4.920738e-002, 2.841113e-002, 3.186728e-002, 3.279954e-003, -7.140228e-002, 1.194830e-002, 5.752388e-002, 1.230775e-002, -1.183952e-002, -1.350806e-002, -8.765986e-003, -1.366397e-002, 1.589508e-002, 5.341315e-002, 4.894339e-003, -1.357295e-002, -1.061455e-002, 5.280344e-002, 2.046231e-002, 3.141442e-002, -1.355926e-002, -6.652035e-002, -4.888999e-002, 1.920701e-002, 4.295701e-002, 1.252964e-002, 3.747733e-002, 4.157668e-002, -5.658110e-002, -6.366730e-002, 4.937026e-002, 1.071604e-001, 1.087054e-001, 9.763934e-002, 8.317358e-002, 6.428385e-002, 5.590454e-002, 2.878646e-002, -1.983062e-002, -7.072950e-003, -1.548782e-002, 3.693567e-002, 2.595095e-002, -1.698429e-003, -2.720415e-002, -6.055813e-002, -5.480068e-002, 4.197190e-003, 2.631838e-002, -1.725354e-002, -1.236239e-002, 8.541498e-003, -4.401944e-002, -4.458389e-002, -6.651314e-003, 4.151909e-002, 6.271067e-002, 5.537682e-002, 3.367441e-002, 1.243593e-002, 5.145316e-004, -1.408776e-002, -2.901405e-002, 1.602242e-002, -1.575398e-002, 2.671383e-002, 3.771618e-002, 2.611888e-002, 4.342258e-002, 8.027317e-003, -4.364910e-002, 2.641573e-003, 5.459074e-002, -2.535913e-003, -2.822949e-002, -7.975372e-003, -3.729957e-002, 4.184947e-003, 3.387091e-002, 4.611206e-002, 3.973741e-002, 1.743864e-002, -1.304080e-002, -3.159880e-002, -3.125218e-002, -3.257476e-002, -2.082472e-002, 3.974408e-002, -2.177246e-002, 1.617107e-002, 4.025716e-002, 6.426746e-002, 8.028367e-002, 5.068137e-002, -2.074460e-002, -4.564565e-003, -1.245359e-002, -5.227312e-002, -4.426715e-002, 1.302170e-002, -1.312467e-003, 3.496775e-002, 6.572645e-002, 6.890253e-002, 3.964716e-002, -4.093035e-003, -4.553018e-002, -5.349200e-002, -3.961273e-002, -3.188581e-002, -7.681429e-003, 4.431968e-002, -5.217062e-002, -4.621581e-004, 1.021052e-002, 4.532885e-002, 2.021212e-002, 4.010367e-003, 1.621373e-002, 2.816921e-002, -3.610448e-002, -5.927652e-002, -4.357532e-002, -1.551961e-002, -5.013225e-002, 3.188402e-002, 4.166823e-002, 4.863775e-002, 4.480734e-002, 1.120751e-002, -2.070778e-002, -2.282179e-002, -1.639317e-002, -1.834110e-002, 5.684725e-004, 3.585671e-002, -7.542646e-002, -1.286629e-002, -1.207948e-002, 9.027476e-004, -2.163937e-002, -3.477922e-002, -2.312566e-002, -2.554010e-003, -1.669327e-002, -1.262913e-002, 2.458495e-002, -2.054483e-002, -4.610082e-002, 1.171867e-002, 1.177014e-002, 1.076014e-003, 1.698324e-002, 1.672725e-002, 3.214465e-003, 6.253920e-003, -5.819135e-005, -2.551072e-002, -6.449417e-003, 8.109100e-003, -5.310241e-002, 1.547799e-002, -3.980321e-002, -3.301789e-002, -3.448598e-002, -2.267875e-002, 1.275295e-002, 5.804489e-003, -2.055728e-002, -3.745581e-002, -2.266011e-004, 3.042805e-002, 4.174807e-002, 4.152464e-002, 1.064150e-002, -3.984314e-002, -4.330237e-002, -5.092805e-003, 1.377336e-002, 1.883634e-002, -8.262424e-003, -4.801230e-002, -2.523362e-002, -2.048644e-002, -1.801246e-002, 2.544019e-002, -8.340093e-002, -3.050809e-002, -1.057070e-002, 3.340729e-002, 6.502696e-002, 5.083685e-002, 2.913587e-002, -3.282912e-002, -1.911953e-002, 4.313661e-002, 7.292054e-002, 6.331062e-002, 2.411836e-002, -3.530335e-002, -7.678151e-002, -5.342087e-002, -3.839478e-004, 1.220389e-002, -2.318970e-002, -6.571822e-002, -4.603447e-002, -2.930792e-002, 7.347503e-003, -4.306790e-003, -9.343140e-002},
{1.609851e-001, 1.257588e-001, 7.432240e-002, 2.435371e-002, -4.238250e-003, -9.128233e-003, -4.781014e-003, -1.374262e-002, -4.095460e-002, -5.623692e-002, -6.259705e-002, -8.126655e-002, -8.231210e-002, -6.948937e-002, -4.013128e-002, 4.721687e-003, 4.074920e-002, 6.488566e-002, 8.791507e-002, 1.165638e-002, -6.375501e-002, -2.917431e-002, -2.697116e-002, -9.420092e-002, 8.128258e-002, 4.559687e-002, 1.016648e-002, -3.063586e-002, -2.878548e-002, -7.449152e-003, 1.602119e-002, 3.238257e-002, 1.552410e-002, -8.667145e-003, -3.215082e-002, -6.045641e-002, -7.466432e-002, -6.847559e-002, -3.231734e-002, 1.234182e-002, 2.702507e-002, 2.337894e-002, 5.617046e-002, 4.470085e-002, -3.368720e-002, -1.587677e-002, -8.834824e-003, -2.536829e-002, 3.562595e-002, -1.954306e-002, -5.742934e-002, -9.363571e-002, -5.377330e-002, -1.225646e-003, 4.946880e-002, 8.125357e-002, 6.331311e-002, 1.790661e-002, -3.161554e-002, -5.816686e-002, -5.032112e-002, -1.326635e-002, 4.381328e-002, 8.904535e-002, 8.801876e-002, 5.609030e-003, -2.218004e-002, 1.390496e-002, 4.607825e-003, -2.242527e-003, -6.158375e-003, 4.364042e-002, -4.418292e-002, -1.599785e-002, -3.479478e-003, -3.590953e-002, -2.113743e-002, 7.941712e-003, 5.502150e-002, 8.533635e-002, 5.521848e-002, 4.112770e-003, -3.379224e-002, -3.937107e-002, -3.713827e-002, -3.243902e-002, -3.753217e-002, -7.682950e-003, 3.968396e-002, 3.053023e-002, -4.539986e-002, -3.856594e-002, 2.663488e-002, 1.818874e-002, -1.446217e-002, 7.325570e-002, -1.223492e-001, -5.708011e-002, 8.177202e-003, 1.428069e-002, -1.177893e-002, -2.431629e-002, -8.892200e-005, 2.952341e-002, -1.997578e-003, -1.729850e-002, 2.373174e-003, 3.543414e-002, 4.495077e-002, 1.198962e-002, -2.166189e-002, -4.810254e-002, -6.082010e-002, -4.265237e-002, -3.928179e-002, -5.073095e-002, 2.653802e-002, 3.966938e-002, -4.998568e-003, 5.823722e-002, -

© ISO/IEC 2004 — All rights reserved


Copyright International Organization for Standardization
Provided by IHS under license with ISO
No reproduction or networking permitted without license from IHS
Not for Resale

2.473285e-002, 5.323821e-002, 9.167180e-002, 3.983372e-002, 6.525049e-003, -1.364363e-002, 2.629902e-003, 3.547740e-002, 6.679759e-003, 1.478572e-002, 3.505139e-002, 8.584585e-003, -2.739802e-002, -3.174418e-002, 1.293902e-002, 4.871688e-002, 2.576820e-002, -2.723421e-002, -2.691770e-002, -7.696401e-003, 2.803666e-002, 3.772155e-002, 1.584657e-002, 1.759564e-003, -7.314707e-002, 9.848599e-002, 1.574364e-001, 2.903673e-002, 2.211948e-002, -1.653975e-003, 2.447545e-002, 9.912485e-002, 5.833910e-002, 4.722881e-002, 4.994314e-002, -3.668932e-003, -4.402058e-002, -5.611744e-002, -1.328265e-002, 5.956707e-002, 1.080766e-001, 6.064974e-002, -3.122939e-003, -4.568084e-003, -2.396750e-002, -1.373216e-002, 2.058308e-002, -5.404003e-002, -1.149445e-001, 4.978604e-002, 7.405032e-002, -7.964143e-002, -1.472714e-002, -3.644708e-002, -8.324487e-003, 5.888541e-002, 1.594513e-002, 7.774737e-003, 5.232026e-002, -5.206310e-002, -4.222208e-003, -1.757726e-002, -5.192715e-002, -4.395924e-002, 1.212045e-002, 1.679149e-002, -4.074952e-004, 1.661199e-002, -6.030438e-002, -7.864119e-002, -8.260872e-003, -4.672496e-002, -9.016758e-002, -3.304711e-002, 1.534990e-002, -1.010083e-001, -2.344212e-002, -6.305147e-002, -5.483476e-002, -2.368717e-002, -5.992885e-002, -3.899852e-003, 3.658568e-002, -1.472343e-001, -7.948595e-002, 2.204706e-002, 2.374524e-002, -1.337876e-002, -4.408791e-002, -4.648574e-002, -1.180763e-002, 4.165300e-003, -6.127743e-002, -9.182862e-002, -3.674831e-002, -3.639727e-002, -2.310342e-002, 7.687108e-002, 9.459322e-002, 1.587859e-003, -1.201473e-002, -1.972944e-002, -2.214099e-002, -3.496237e-002, -4.128840e-002, 8.291573e-003, 8.474566e-002, -2.719758e-003, -6.156191e-002, -1.414528e-002, -2.410702e-002, -4.617354e-002, -1.512579e-002, -3.818449e-003, 1.904693e-002, 2.465886e-002, 2.471845e-004, 3.340821e-003, 5.174596e-003, -2.137191e-002, 1.888095e-002, 1.091888e-001, 1.199945e-001, 4.124865e-002, -3.064642e-002, 2.738016e-002, 1.747535e-002, -1.839230e-002, -1.784641e-003, -2.530737e-002, 6.259818e-002, 6.311175e-002, 3.119751e-002, 3.045818e-002, 4.577709e-002, 6.013330e-002, 6.072982e-002, 1.234370e-002, 9.556486e-003, 5.659863e-003, 1.893989e-002, 2.887005e-002, 3.491046e-003, -4.974038e-003, -2.838243e-002, 3.008115e-002, 3.480920e-002, -1.234593e-002, -9.103391e-003, 5.984193e-002, 4.640090e-002, -1.103169e-002, -1.158674e-002, -4.700727e-003, -2.187320e-002, 3.352855e-003, 1.634566e-002, 2.017908e-002, 3.601817e-002, 5.478414e-002, 5.189020e-002, 1.782300e-003, -2.816280e-002, -1.286084e-002, 2.316270e-002, 1.063605e-002, -5.568681e-003, 3.067116e-002, -1.088674e-001, -8.151054e-002, -3.855532e-002, -2.874856e-002, 2.219733e-002, 6.958737e-002, 5.622952e-002, -9.851013e-003, -4.919652e-002, 5.524653e-002, -3.204193e-003, -4.710636e-002, -2.857562e-002, -8.659613e-003, 3.853597e-003, 1.896560e-002, 2.220280e-002, -4.927904e-003, -4.356642e-002, 3.759302e-004, 3.722134e-002, 9.868230e-003, -1.611907e-003, 3.453880e-002, -1.178954e-001, -5.655716e-002, -1.117061e-002, 7.477550e-003, 4.075090e-002, 6.192414e-002, 4.258185e-002, 9.967564e-003, -8.390598e-002, 1.017229e-002, 7.618211e-002, 9.732902e-003, -1.714520e-003, 1.962975e-002, 3.384721e-002, 3.892571e-002, 3.875562e-002, 1.152561e-002, 4.928141e-003, 3.112277e-002, 4.279468e-002, 2.899276e-002, 2.307277e-002, 2.427808e-002, -4.977830e-002, 4.947362e-003, 1.424338e-002, 4.237327e-003, 3.648158e-002, 3.232869e-002, 1.954227e-002, 5.037226e-002, -4.294738e-002, -7.710986e-002, 4.127662e-002, 4.710499e-002, 3.004911e-002, 3.827992e-002, 4.584748e-002, 3.977692e-002, 2.940561e-002, 1.216159e-002, 1.170311e-002, 3.342255e-002, 4.627896e-002, 4.426824e-002, 3.321685e-002, 1.439005e-002, -1.127620e-002, 1.644318e-003, -4.533643e-002, -5.141646e-002, 2.531859e-002, 5.952619e-003, -2.665389e-002, 3.715212e-002, 1.472345e-002, -8.863399e-002, -5.907795e-002, 5.958197e-003, -1.899752e-003, -2.969058e-002, -3.250980e-002, -3.394495e-002, -3.469381e-002, -1.524828e-002, 1.122844e-002, 3.102731e-002, 4.817527e-002, 3.929310e-002, 1.526667e-002, 1.347673e-002, 3.468250e-002, 1.469900e-002, -2.197578e-002, -3.423833e-002, 1.650098e-003, -4.181390e-002, -5.841299e-002, 9.753172e-003, 4.987281e-002, 1.031144e-002, -2.331979e-002, -1.230390e-003, -8.736789e-003, -7.205690e-002, -1.148226e-001, -1.170361e-001, -7.977609e-002, -3.395531e-002, -8.869178e-003, 7.131695e-003, 2.172724e-002, -3.328580e-003, -1.519032e-002, 1.657565e-002, 3.809711e-002, 5.287770e-002, 9.125617e-002, 6.214944e-002, -4.021731e-002, -9.088823e-002, -6.407388e-002, 3.632289e-002, 4.339579e-002, 7.241313e-002, 4.875651e-002, 1.682237e-002, 2.558103e-002, -1.909311e-002, -8.689243e-002, -1.089952e-001, -7.049454e-002, -3.652935e-002, -2.644252e-002, -2.285795e-002, -2.425279e-003, -3.076968e-002, -1.616508e-002, 9.424792e-003, -6.551284e-003, -4.281379e-003, 1.818893e-002, 1.030946e-002, 6.826398e-003, -4.312177e-002, -7.868092e-002, -7.232150e-003, 5.268195e-002, 5.995500e-002, 1.074745e-002, -3.013137e-002, -2.110390e-005, 6.213375e-003, -2.158270e-002, -4.076619e-002, -1.807272e-002, -1.069167e-002, -2.720847e-002, -4.239416e-002, -1.072695e-002, -2.530124e-002, 8.677211e-003, 1.904613e-002, -2.829640e-002, -2.403206e-002, -3.739115e-002, -2.221237e-002, 2.534608e-002, 1.692734e-003, -5.855019e-002, -6.190311e-003, 6.167454e-002, 3.425566e-002, -8.045744e-003, -4.345727e-002, -4.570298e-002, -2.293304e-002, 8.908034e-003, 3.400109e-002, 5.032740e-002, 2.190217e-002, -3.496965e-002, -5.255387e-002, 1.005767e-003, -3.077050e-002, -1.247507e-002, -3.826113e-003, 2.399792e-002, 3.491052e-002, 2.481209e-002, -5.880402e-003, -2.115560e-002, -3.258232e-002, -7.394789e-002, -1.476599e-002, 4.386805e-002, 5.394129e-002, 5.100937e-002, 1.530194e-002, -2.281772e-002, -2.702625e-002, 2.009721e-002, 7.166523e-002, 9.214199e-002, 4.859183e-002, -3.018194e-002, -3.496132e-002, 1.068834e-002, -3.687132e-002, -3.133527e-002, 2.124431e-003},


© ISO/IEC 2004 — All rights reserved

Copyright International Organization for Standardization
Provided by IHS under license with ISO
No reproduction or networking permitted without license from IHS
Not for Resale

{1.475847e-001, 8.224551e-002, 1.165703e-002, -2.521294e-002, -1.916010e-002, -1.570506e-003, 2.951766e-002, 3.100349e-002, -2.682685e-002, -7.792336e-002, -8.898370e-002, -6.911624e-002, -4.179811e-002, -1.505222e-002, 4.310212e-003, 2.378839e-002, 4.756303e-002, 2.163112e-002, -1.759287e-002, -1.163623e-002, -4.943624e-002, -6.943971e-002, -2.909396e-003, -8.343600e-002, 1.095379e-001, 2.680582e-002, -4.613660e-002, -8.041082e-002, -5.589105e-002, -1.455996e-003, 5.819437e-002, 8.022955e-002, 2.847042e-002, -3.637193e-002, -6.438108e-002, -3.434025e-002, 6.653405e-004, 3.048724e-002, 3.565768e-002, 3.286408e-002, 3.989152e-002, 3.091455e-002, -1.302505e-002, 3.771246e-003, 4.776160e-004, -2.910020e-002, 3.029573e-002, -4.085291e-002, 3.053176e-002, -1.361379e-002, -8.259261e-002, -1.191138e-001, -8.665435e-002, -1.981405e-002, 6.397693e-002, 9.948615e-002, 5.503700e-002, -6.526826e-003, -1.803628e-002, 2.108529e-002, 3.215655e-002, 3.074291e-002, 1.211658e-002, 1.841998e-003, 1.590915e-002, 2.741090e-002, -2.728842e-002, -1.914887e-002, 2.538449e-002, 1.723754e-002, 3.323850e-002, 9.286846e-004, 3.041511e-002, 5.133406e-002, 3.837680e-002, -1.700482e-002, -4.767828e-002, -2.516352e-002, 3.049789e-002, 5.735867e-002, 1.851249e-002, 5.690592e-003, 3.478524e-002, 4.711758e-002, 1.706041e-003, -4.609867e-002, -5.525329e-002, -3.279614e-002, 2.941779e-002, 8.903755e-002, 4.090518e-002, -2.319819e-002, 8.202456e-003, 3.003409e-002, 9.094654e-003, 1.046918e-002, 7.474482e-002, 6.714577e-002, 4.517266e-002, 1.122056e-002, -4.446854e-002, -5.643553e-002, -4.162863e-002, -4.564905e-002, -4.682166e-002, 1.418599e-002, 7.905424e-002, 8.107624e-002, 5.179669e-002, 3.025310e-002, -4.269271e-003, -4.234196e-002, -3.676166e-002, 3.180497e-002, 6.073624e-002, -1.071576e-002, -1.264871e-002, 2.009514e-002, -3.762810e-002, -1.577692e-002, 3.993783e-002, 3.265769e-002, -2.934461e-002, -1.231607e-001, -1.530258e-001, -9.209572e-002, -7.822474e-002, -1.336473e-001, -1.149098e-001, 2.517437e-005, 2.520338e-002, -3.419833e-004, -1.633598e-002, -2.513398e-002, -4.967484e-002, -6.760399e-002, -6.139261e-002, -4.068114e-002, -1.311810e-002, -3.747629e-002, -4.815013e-002, 9.239591e-005, -5.914314e-002, -3.915809e-002, 5.803894e-002, 3.460128e-002, 1.771600e-002, -6.603551e-002, -9.568223e-002, 7.669375e-002, 9.867281e-002, -3.518079e-002, -2.720354e-002, 4.561749e-002, 1.119183e-002, 2.145135e-002, 3.191555e-002, 2.327121e-003, -4.830772e-002, -7.037774e-002, -5.694232e-002, -8.970563e-003, 1.296876e-002, 2.182839e-002, -5.130660e-002, -4.870154e-003, -1.052697e-002, -1.568261e-002, -2.310935e-002, -4.634392e-002, 9.124285e-002, 6.768447e-002, -1.182466e-002, 1.375801e-001, 1.122317e-001, -1.421830e-002, 5.379200e-002, 6.119991e-002, -9.023567e-003, -1.919522e-002, -1.590803e-002, 1.170472e-002, 6.471063e-002, 6.516896e-003, -9.416988e-002, -6.764878e-002, -2.993126e-002, 6.724459e-002, 2.644493e-002, 6.612998e-004, 1.257456e-002, 6.210193e-003, -5.082229e-002, -8.263490e-002, 1.185201e-001, 1.074802e-001, -4.922480e-002, 7.022600e-002, 2.786135e-002, -6.139525e-002, 2.417909e-002, 6.271603e-002, -4.099882e-002, -5.385661e-002, -3.757691e-002, -2.464585e-002, 4.835555e-002, 7.591553e-002, 5.093062e-002, 5.683666e-003, -5.549248e-002, 1.834405e-002, 3.419308e-002, -2.102108e-002, -4.275712e-003, 1.785141e-002, -5.439161e-002, 4.435112e-003, 1.102205e-001, 7.101269e-002, -3.709993e-002, 5.681536e-002, 1.238407e-002, -5.621193e-002, -2.124689e-002, 3.186102e-002, -5.646796e-002, -6.155968e-002, -7.670881e-004, 4.022100e-002, 4.909691e-002, 2.314492e-002, 4.971734e-002, 8.371025e-002, 1.868714e-003, -4.763019e-004, -2.468467e-003, -1.865987e-002, 8.455823e-003, 4.238561e-002, -1.116149e-001, -2.012835e-002, 7.291022e-002, -1.400294e-002, -2.797961e-002, 2.871982e-002, -4.096079e-003, -2.577224e-002, -4.257530e-002, -1.277915e-003, -4.441668e-002, -8.582324e-002, -5.585512e-002, -2.520502e-002, -1.054771e-002, -4.185475e-002, -6.930681e-002, -2.799672e-002, -2.658592e-002, -1.398115e-002, 8.681589e-003, 1.461498e-002, -3.748911e-003, 2.341199e-002, -1.030789e-001, -2.695781e-002, 8.147250e-003, -5.235559e-002, -3.063622e-003, -1.142071e-002, -3.553303e-002, -1.388437e-002, -2.717610e-002, -2.929734e-002, 1.369753e-003, -3.037467e-002, -1.850624e-002, -2.128070e-003, -3.645999e-003, -3.515646e-002, -6.714465e-002, -3.773320e-002, -2.018419e-002, -1.449197e-002, 3.146858e-003, 3.554137e-002, -1.633736e-002, 3.537518e-003, -7.502642e-002, -2.818076e-002, -4.707210e-002, -3.745950e-002, 4.044773e-003, -3.558166e-002, -5.221386e-002, 1.778776e-003, 3.140592e-002, -2.065441e-002, -1.314490e-002, 2.369360e-002, 4.085768e-002, 6.659756e-002, 6.051319e-002, 2.160114e-002, -2.332047e-002, 5.211288e-003, 1.269841e-002, -6.921214e-003, -3.461287e-003, 3.084673e-002, -1.967432e-002, -2.025802e-002, -5.430901e-002, -5.032513e-002, -7.001656e-002, -6.078356e-003, 6.414999e-003, -3.411160e-002, -4.237153e-002, 2.724170e-002, 8.328041e-002, 2.385135e-002, -3.356456e-002, -1.062025e-003, 4.936462e-002, 8.306021e-002, 8.333341e-002, 5.046564e-002, 2.104917e-002, 3.989570e-002, 4.252621e-002, 6.169840e-003, -1.418065e-002, 9.322102e-003, 1.191600e-003, -3.351949e-002, -3.149827e-002, -4.326758e-002, -3.963187e-002, 1.490087e-002, -4.678240e-003, -4.828447e-002, -4.075748e-002, 4.115827e-002, 8.163776e-002, 2.145781e-002, -4.598285e-003, -2.896311e-003, 1.177409e-002, 4.344414e-002, 6.158643e-002, 5.184873e-002, 3.476488e-002, 5.446331e-002, 4.390298e-002, 1.620686e-002, -8.805948e-003, -5.070862e-003, 3.048454e-002, -2.654718e-003, 2.984642e-002, 1.035731e-002, -1.621327e-002, 1.296105e-002, -2.290052e-003, -3.610386e-002, -7.900121e-003, 3.623236e-002, -5.838947e-003, -4.810170e-002, -2.060969e-002, 4.008503e-002, 2.481720e-002, 1.241437e-002, 2.824032e-002, 2.990435e-002, 2.219902e-002, 4.324195e-002, 4.355722e-002, 2.098811e-002, -4.085179e-003, -2.559246e-002, 4.460244e-002, 3.182426e-002,

© ISO/IEC 2004 — All rights reserved


Copyright International Organization for Standardization
Provided by IHS under license with ISO
No reproduction or networking permitted without license from IHS
Not for Resale

9.100224e-002, 7.086894e-002, 1.858455e-002, 3.289757e-002, 3.655516e-002, 2.722990e-002, 6.264370e-002, 5.372059e-002, -3.066041e-002, -2.488960e-002, -1.158784e-002, 3.968520e-002, 4.974446e-002, -3.887606e-003, -3.502483e-002, -4.296129e-002, -2.919046e-002, 7.834082e-003, 1.724590e-002, 8.825136e-003, -1.050426e-002, -4.257245e-002, 2.090312e-002, 2.061735e-002, 6.651513e-002, 3.637957e-002, 6.686711e-003, 1.198946e-002, -1.958845e-002, -5.462843e-003, 2.476161e-002, 4.294417e-002, 3.162862e-003, 7.140538e-002, 5.654298e-002, -3.275863e-003, 2.867159e-002, -2.620153e-003, -6.176851e-002, -8.653323e-002, -6.302948e-002, -1.992082e-002, -1.023874e-002, 2.670315e-003, -1.007007e-002, -4.494934e-002, -1.490460e-002, -1.301085e-002, -2.690163e-002, -6.303209e-002, -2.316008e-002, 7.639275e-002, 9.241640e-002, 2.259204e-002, -1.467461e-002, 7.605601e-003, -1.615172e-002, -1.470088e-002, 2.794060e-004, -6.399125e-002, -3.915384e-002, 5.344979e-003, -3.572254e-002, -7.631840e-002, -6.332187e-002, -3.049506e-002, -1.849670e-002, 5.458971e-003, 5.015512e-003, -1.995516e-002, -2.232474e-002, 2.714294e-003, -5.817672e-002, -3.362826e-002, 9.276873e-004, 5.024428e-002, 7.432960e-002, 4.984032e-002, 3.802481e-002, 6.950218e-002, -5.681727e-003, -6.323503e-002, -4.049473e-002, -5.013929e-002, -4.872189e-002, 2.648033e-003, 1.866600e-002, -2.098301e-002, -2.398786e-002, -1.822056e-002, -1.633800e-002, 2.144647e-002, 3.118518e-002, 1.901481e-002, -1.641758e-002, 1.562970e-002, -1.737519e-003, 1.970312e-002, 1.328437e-002, -6.795577e-003, -1.567476e-002, -1.059591e-002, -2.806790e-003, 3.985423e-002, -4.064177e-003, -3.832353e-002, -5.050689e-003, 2.233960e-002, 9.742492e-003, 1.836796e-002, 5.599806e-002, 4.745028e-002, 3.162469e-002, 1.456746e-003, -3.707412e-003, 4.080510e-002, 4.421345e-002, 4.781160e-002, -2.244598e-002, -1.573344e-002},
{-3.428214e-002, -9.774631e-002, -1.285489e-001, -8.757363e-002, -1.555167e-002, 3.867511e-002, 7.381261e-002, 5.432764e-002, -2.368871e-002, -6.272863e-002, -1.676823e-002, 5.863323e-002, 8.695045e-002, 6.208936e-002, 2.136260e-002, 2.691023e-002, 6.214272e-002, 6.794055e-002, -1.633800e-003, -2.566544e-002, 2.796855e-002, 9.957313e-003, 3.261709e-002, 1.291667e-003, 8.747485e-002, -3.415750e-002, -1.159338e-001, -1.069641e-001, -2.038360e-002, 6.421457e-002, 1.028860e-001, 7.405788e-002, -3.345299e-002, -1.100992e-001, -8.172215e-002, 2.530221e-002, 8.674687e-002, 4.265569e-002, -4.945273e-002, -9.721399e-002, -7.149959e-002, -9.801274e-003, -1.616378e-002, -2.523305e-002, 3.693746e-002, 9.836835e-003, 3.222941e-002, 6.588964e-003, 1.864863e-001, 4.903115e-002, -8.915585e-002, -1.152019e-001, -1.630525e-002, 9.287886e-002, 1.421722e-001, 8.807357e-002, -5.719485e-002, -1.528827e-001, -1.002827e-001, 4.125794e-002, 1.400335e-001, 1.349297e-001, 4.432736e-002, -4.672168e-002, -7.154980e-002, -3.144447e-002, -2.517513e-002, -2.906185e-002, 3.789649e-002, 7.154978e-003, 1.697025e-002, -1.721471e-003, 7.250876e-002, -1.120651e-002, -1.228343e-001, -1.478644e-001, -3.897036e-002, 8.274222e-002, 1.450803e-001, 7.438378e-002, -9.165943e-002, -1.816787e-001, -1.073071e-001, 1.004624e-002, 5.924835e-002, 6.414927e-002, 1.411038e-003, -5.195393e-002, -3.106944e-002, 5.198235e-002, 5.003040e-002, -4.815361e-003, 2.202165e-002, 1.367753e-003, 1.016700e-002, -1.494615e-002, 6.496460e-002, 6.855749e-002, 4.892963e-003, -5.829263e-002, -1.304646e-002, 7.946332e-002, 1.244952e-001, 7.191977e-002, -5.386134e-002, -1.026318e-001, -9.142691e-003, 5.940524e-002, 7.778880e-002, 5.147446e-002, -2.187429e-002, -9.263240e-002, -8.883171e-002, -6.968364e-003, 4.127361e-002, 9.806540e-004, -1.609625e-002, -1.316514e-002, 5.519384e-003, -8.381901e-003, -8.130076e-002, 2.294932e-003, 5.752625e-002, 4.140502e-003, -1.637348e-002, 2.919256e-002, 4.849120e-002, 3.341408e-002, 5.006680e-004, -2.509844e-002, 9.167243e-003, 3.206860e-002, 4.985331e-002, 3.400248e-002, -2.058525e-002, -8.356272e-002, -9.807261e-002, -4.606484e-002, -2.356505e-003, -4.144695e-002, -5.171347e-002, -7.987336e-003, 2.308244e-003, 6.976557e-003, -8.474304e-002, -5.685366e-002, 3.454676e-002, 5.227441e-002, -1.413583e-002, -1.651234e-002, -9.011278e-003, 8.618458e-003, 4.983201e-002, -7.623611e-003, -1.694206e-002, 2.116457e-002, 4.062000e-002, 4.729426e-002, 3.719170e-002, 2.604376e-003, -3.383588e-002, -4.715856e-003, 4.010853e-002, -2.084719e-002, -4.768101e-002, -3.071308e-004, -1.499874e-002, 3.507997e-003, 1.170589e-003, -3.638315e-002, 5.513984e-003, 2.069355e-002, -1.106341e-003, 1.208750e-002, 1.310279e-002, 2.185227e-002, 4.459656e-002, -4.164915e-002, -6.519354e-003, 3.164511e-002, -4.257664e-002, -6.918437e-002, 1.684169e-002, 4.577039e-002, -4.644666e-002, -4.049836e-002, 2.655713e-002, 2.499929e-002, -4.927343e-004, 1.876951e-002, -3.304434e-002, 1.833652e-002, 2.130649e-002, -4.734621e-002, -5.450061e-002, -5.875003e-002, -2.341599e-002, 1.440497e-002, 2.756909e-002, 1.613949e-002, -1.124926e-003, -5.580002e-002, -1.533184e-002, -1.452141e-002, -1.574683e-002, -2.469075e-002, 2.215584e-003, 1.380813e-002, -1.022590e-002, -3.174251e-002, -5.081823e-003, 1.028738e-003, 1.116853e-002, 5.758168e-003, -2.052558e-002, 2.384295e-002, -4.180639e-003, -7.214463e-003, -1.004455e-003, -5.269767e-003, 1.675902e-002, 9.179714e-003, 2.935221e-002, 2.286681e-002, 1.867345e-002, 8.031905e-003, -2.511464e-003, -1.785111e-003, 1.083602e-002, 9.201812e-003, -1.341279e-002, -3.321094e-002, -2.614584e-003, 1.164083e-002, -5.044139e-003, 1.520924e-003, 3.625837e-002, 4.846244e-004, -8.986668e-003, 4.161500e-003, 2.568117e-004, 2.276809e-002, 3.889625e-002, 4.445180e-002, 3.470461e-002, 2.076300e-003, 2.992361e-002, 7.316050e-003, 3.129958e-002, 3.316646e-002, -2.738684e-003, 2.286334e-003, 2.284625e-002, 4.297740e-002, 5.254775e-002, 4.987793e-002, 3.564678e-002, 1.182295e-002, -1.883591e-002, -5.367230e-003, 2.866818e-002, -1.690771e-002, 1.223903e-002, -3.591547e-002, -


© ISO/IEC 2004 — All rights reserved

Copyright International Organization for Standardization
Provided by IHS under license with ISO
No reproduction or networking permitted without license from IHS
Not for Resale

3.173407e-002, -6.350019e-003, 1.454489e-002, 4.550237e-002, -1.319623e-002, -1.078347e-002, 2.143112e-002, 1.020097e-003, 1.758073e-002, 1.742569e-002, -3.213141e-002, -4.334156e-002, -2.601967e-002, -3.575563e-003, 2.480612e-002, 3.408574e-002, 1.847694e-002, -3.374927e-004, -2.933535e-002, -6.061393e-003, 3.230177e-002, -2.752096e-002, 2.740590e-002, -5.293524e-002, -7.819478e-002, -4.363514e-002, 2.892162e-002, 6.002808e-003, -6.458470e-002, -2.301092e-002, 1.070648e-002, -5.771849e-003, -3.021217e-003, 2.148088e-002, -4.536203e-003, -4.043262e-002, -4.846739e-002, -3.999874e-002, -2.231578e-002, -8.902120e-003, -4.888175e-003, -1.536290e-002, -2.623196e-002, -1.170045e-002, 2.203054e-002, -3.102460e-002, 3.504434e-002, -4.668889e-002, -7.263194e-002, -5.976957e-003, 4.686327e-002, -2.590880e-002, -6.112298e-002, 1.840243e-003, 2.175051e-002, -1.374114e-002, -1.166152e-003, -2.255727e-003, 3.759816e-002, 3.129849e-002, 1.020589e-002, -3.836114e-003, -1.217399e-003, 9.612151e-003, 8.281233e-003, -5.803400e-003, -1.633032e-002, -2.529402e-002, 1.535915e-002, -2.770744e-002, 2.562988e-002, -9.651883e-003, -3.780562e-002, 2.917362e-002, 5.101380e-002, -3.536658e-002, -2.339579e-002, 3.048873e-002, 4.454191e-002, -1.057502e-002, -3.359708e-003, -1.571855e-002, -9.652665e-004, 4.001754e-002, 5.563552e-002, 5.411758e-002, 4.896194e-002, 3.361481e-002, 8.181961e-003, -1.587488e-002, -4.080209e-002, -4.035638e-002, 1.442784e-002, -1.332173e-002, 1.233093e-003, 8.936294e-003, -3.717126e-002, 3.842160e-002, 2.359153e-002, -2.757954e-002, -1.139154e-002, 2.229764e-002, 4.174795e-002, -1.780284e-002, -2.910746e-002, -5.590561e-003, -1.491449e-002, -9.494535e-005, 1.517053e-002, 1.981257e-002, 1.792592e-002, 6.501729e-004, -2.827914e-002, -4.875337e-002, -6.205836e-002, -4.396490e-002, 1.432799e-002, -2.886921e-003, -2.318581e-002, 5.834889e-003, -2.247186e-002, 2.384405e-002, -2.282963e-002, -2.149505e-003, 1.059681e-002, 4.278464e-003, 1.010479e-002, -3.963520e-002, -2.247729e-002, 2.192380e-002, 2.640094e-002, 1.795035e-002, -9.282968e-003, -3.055734e-002, -5.554503e-002, -7.374542e-002, -7.555802e-002, -6.626886e-002, -5.924079e-002, -3.305884e-002, 1.939726e-002, 4.456733e-003, -1.544387e-002, -2.676295e-002, 2.949740e-002, 2.076311e-002, -3.304672e-003, 3.203418e-002, -1.089243e-002, -3.842827e-002, -1.602062e-002, -2.727714e-002, -2.104170e-002, 9.908129e-003, 2.175353e-002, 2.592053e-002, 5.535851e-004, -2.705612e-002, -5.581829e-002, -7.198177e-002, -5.465350e-002, -3.436036e-002, -2.488439e-002, -1.687084e-002, 2.962045e-002, 1.752470e-002, 1.967410e-002, -2.350840e-002, 4.234880e-002, 1.773684e-002, 2.088330e-002, 3.330096e-002, 3.385060e-002, 2.096622e-002, 4.517982e-004, -5.783958e-002, -3.250615e-002, 1.226686e-002, 1.831793e-002, 9.951762e-003, 3.110352e-004, -9.204610e-003, -1.803289e-002, -2.254706e-002, -4.615920e-004, 1.985018e-002, 1.743064e-002, 3.299990e-003, 2.312949e-002, 2.592455e-002, 5.762361e-002, 1.811430e-002, 1.410050e-002, -5.542943e-003, 1.518918e-002, 1.481327e-002, 1.286323e-002, 2.552348e-002, 2.120433e-002, -3.678095e-002, -3.276747e-002, 1.363093e-002, 2.102350e-002, 1.417420e-002, 7.358643e-003, 4.742483e-003, 2.767202e-002, 4.827278e-002, 7.454992e-002, 7.310699e-002, 4.895095e-002, 7.630020e-003, -1.236432e-002, -4.702833e-003, 2.400417e-002, -1.184284e-003, -2.198976e-002, -3.885597e-002, -3.001692e-002, -2.452486e-002, -1.529743e-002, -1.005881e-002, 8.070971e-003, -3.026055e-002, -4.340792e-002, -2.279162e-002, -1.294437e-002, -4.040901e-003, 6.991953e-003, 1.534632e-002, 5.251829e-002, 9.740234e-002, 1.226942e-001, 1.098532e-001, 6.849841e-002, -2.124806e-003, -4.985563e-002, -4.646141e-002, -6.230401e-002, -6.036993e-002},
{5.482755e-002, 9.623235e-003, -2.955332e-002, -5.506345e-002, -6.570895e-002, -7.672867e-002, -6.506770e-002, -3.361950e-002, -1.334146e-002, 2.705130e-003, 7.609956e-003, 4.297513e-003, 1.381447e-002, 3.708562e-002, 3.868480e-002, 2.926585e-002, -1.917417e-002, -8.890576e-002, -9.179351e-002, -4.927724e-002, -6.078844e-002, -6.413466e-002, 4.959893e-003, 1.183360e-002, 6.614608e-002, 1.446908e-002, -2.207110e-002, -4.127269e-002, -4.110910e-002, -4.256986e-002, -3.174266e-002, -9.751858e-003, 1.094306e-002, 1.133447e-002, 2.007004e-003, -3.261714e-004, 1.125338e-002, 3.481496e-002, 4.705597e-002, 6.303320e-002, 5.759718e-002, -8.335140e-003, -2.157236e-002, 9.890275e-003, -1.079037e-002, -2.760256e-002, 3.704326e-003, -1.705114e-003, 4.421960e-002, 2.954779e-002, 6.592320e-003, -2.504326e-003, 8.041151e-003, 2.954966e-003, 1.722300e-003, 2.318546e-002, 2.530142e-002, -5.378110e-003, -3.996896e-002, -4.428229e-002, -3.941844e-002, -2.618592e-002, -1.934012e-002, 6.270553e-004, 4.607645e-002, 2.709387e-002, 1.951427e-002, 6.214808e-002, 3.868369e-002, 2.291076e-002, 1.243951e-002, -1.046495e-002, 3.938889e-002, 1.772682e-002, 1.626032e-003, 2.310884e-002, 4.571711e-002, 3.850460e-002, 3.205413e-002, 3.945236e-002, 2.833630e-002, -1.926602e-002, -2.891664e-002, 4.793685e-003, 2.311310e-002, 7.963348e-003, -2.636955e-002, -5.120407e-002, -1.752628e-002, 2.598850e-002, 3.471198e-002, 4.506151e-002, 3.407836e-002, 4.796297e-002, 1.168197e-002, 1.909528e-003, 1.195228e-002, -2.394324e-002, -5.984083e-002, -4.239196e-002, -3.285053e-003, 1.899646e-002, 7.852321e-003, -7.622466e-003, -2.816595e-002, -5.047082e-002, -1.030491e-002, 3.434542e-002, 4.540225e-002, 3.210293e-002, -8.762855e-004, -2.569687e-002, -4.118307e-002, -3.178830e-002, 2.184053e-002, 8.754870e-003, -1.264845e-002, 1.955988e-002, 3.892455e-003, 2.877188e-002, 3.974666e-002, 2.189270e-002, -1.958736e-002, -6.421055e-002, -4.298236e-002, 2.608700e-002, 2.104287e-002, -3.112077e-002, -6.133376e-002, -3.843954e-002, -3.368972e-002, -6.942136e-002, -2.986174e-002, 2.851518e-002, 7.485308e-002, 1.065007e-001, 9.658939e-002, 3.264548e-002, 3.461122e-002, 2.180489e-002, -2.895450e-002, -2.434218e-002, -1.872882e-002, 1.999762e-002,

© ISO/IEC 2004 — All rights reserved


Copyright International Organization for Standardization
Provided by IHS under license with ISO
No reproduction or networking permitted without license from IHS
Not for Resale

5.262806e-002, 5.693170e-002, 2.010695e-002, -4.653861e-002, -7.318385e-002, 6.906004e-002, 1.158533e-001, 2.742804e-002, -4.288999e-002, -5.961947e-003, -1.915698e-002, -4.198910e-002, -2.783076e-002, -2.823825e-002, -2.544924e-002, 3.708211e-002, 7.899979e-002, 5.725857e-002, 3.434419e-002, 4.673979e-002, 1.734190e-002, -1.693982e-002, -3.949395e-002, -3.025633e-002, 8.316274e-003, 2.033785e-002, 4.931639e-002, -6.117388e-002, -1.340314e-001, -4.914461e-002, -1.491633e-002, -4.400677e-002, -4.085019e-002, 2.937110e-002, 7.513387e-002, 6.767864e-003, -2.394255e-002, -3.615895e-002, -7.825312e-002, -6.531775e-002, -2.730111e-002, -2.320364e-002, -4.776186e-002, -1.840975e-002, 3.771489e-002, 1.735297e-002, -1.526983e-002, -3.034169e-002, -1.261142e-001, -9.584177e-002, 3.756208e-002, -1.273703e-002, -9.103368e-002, -5.746091e-002, -4.997459e-002, -5.401778e-002, 2.777002e-003, 8.255220e-002, 7.218194e-002, -8.014234e-002, -1.091049e-001, 3.848915e-002, 1.756963e-002, -3.693017e-002, 6.040268e-003, -1.057616e-002, -5.397449e-002, -7.029005e-002, -2.480444e-003, 3.606128e-002, 5.507375e-002, 2.349548e-002, -1.634654e-003, 3.977005e-002, 1.049045e-001, 1.106738e-001, 5.602544e-002, 1.160632e-002, -2.008887e-002, -1.138775e-002, 4.795040e-002, 1.106129e-001, 1.221185e-002, -4.364209e-002, -3.189488e-002, 3.481666e-002, 5.344683e-002, 3.205436e-002, 1.883597e-002, 1.959172e-002, 4.295904e-002, 9.127843e-004, 1.558661e-002, 3.920431e-002, 6.129760e-002, 1.141994e-002, -4.707280e-003, 5.159475e-002, 1.329515e-001, 1.628261e-001, 6.799985e-002, 1.685038e-002, 5.410853e-004, 6.529829e-003, 5.672121e-002, 1.132010e-001, -2.351579e-002, -9.292911e-002, -5.389622e-002, 8.806017e-003, 6.524074e-002, 7.499452e-002, 1.220609e-002, -1.402295e-002, 4.035530e-002, 2.926891e-002, 3.168396e-002, 2.189987e-002, 2.521792e-002, -1.244441e-002, -4.508963e-002, -4.002657e-003, 5.092519e-002, 8.240947e-002, 1.365726e-002, -3.489878e-003, 6.612831e-003, -1.536863e-003, 1.848657e-002, 6.698302e-002, -2.222756e-002, -1.158830e-001, -1.272648e-001, -1.005791e-001, -5.214024e-002, -1.516549e-002, -4.401914e-002, -6.055240e-002, -2.631854e-002, -2.365920e-002, 8.908360e-003, -3.474565e-003, -1.663311e-002, -8.212245e-003, -7.725604e-002, -7.783876e-002, -2.110964e-002, -9.275068e-003, -3.008903e-002, -5.202380e-003, 1.925579e-002, -5.993214e-004, -2.570391e-002, 7.239897e-003, -8.280440e-003, -7.191145e-002, -7.820507e-002, -6.009147e-002, -3.824362e-002, -1.349942e-002, -3.262109e-002, -7.423396e-002, -7.901830e-002, -5.951634e-002, -3.488083e-003, -2.611098e-002, -3.799535e-002, 1.245838e-002, -6.689810e-002, -6.623387e-002, -4.815691e-002, -3.727251e-002, -1.411029e-002, 9.082087e-003, 2.637189e-002, 2.375475e-002, -2.713742e-002, -3.763484e-002, -2.933947e-002, -2.556069e-002, 1.948360e-003, 3.288331e-002, 6.142611e-002, 6.613230e-002, 1.020961e-002, -7.302551e-002, -8.813374e-002, -5.239039e-002, -3.191469e-004, -2.154264e-002, -2.938152e-002, 2.476377e-002, 2.115513e-003, -2.941158e-002, -4.040736e-002, 9.173168e-003, 1.182095e-002, 1.156429e-002, 1.707104e-002, 2.215174e-002, -1.049555e-002, -2.525001e-002, -5.696804e-002, -5.581606e-002, 9.765865e-004, 4.654539e-002, 7.293778e-002, 6.995059e-002, 1.048022e-002, -5.339092e-002, -4.676658e-002, -1.730983e-002, 1.673611e-002, -7.969040e-003, -9.471964e-003, 5.300535e-003, 4.131356e-002, -3.767436e-002, 4.607542e-003, 7.057765e-002, 2.770651e-003, -2.123245e-002, -3.529662e-002, -3.792511e-002, -3.127600e-002, 1.471872e-002, 1.261263e-002, -5.821389e-002, -2.570032e-002, 3.374166e-002, 7.675156e-002, 7.782419e-002, 3.367427e-002, 6.968810e-003, 2.685769e-002, 1.919351e-002, 2.338114e-002, -1.145699e-003, 6.109294e-003, -2.651928e-002, 5.471525e-002, -3.541460e-002, 7.073160e-003, 4.079035e-002, 6.686467e-003, -3.097327e-004, -2.315399e-002, -2.626487e-002, -3.094944e-002, 3.193174e-002, 6.262730e-002, 1.634305e-002, -1.213084e-002, 1.867338e-002, 5.857436e-002, 6.459491e-002, 3.404184e-002, 3.250347e-002, 5.209503e-002, 1.400061e-002, 1.763470e-002, -3.749139e-003, 1.631548e-003, -4.711930e-002, 7.535725e-002, -8.652342e-003, -4.754390e-002, 6.263125e-003, 3.431686e-002, 9.906331e-003, 1.867399e-002, 6.289554e-002, 1.712438e-002, -6.872139e-002, -2.536653e-002, 5.232191e-002, 4.913205e-002, 2.277293e-002, 3.126779e-002, 2.700395e-002, 1.851306e-002, 4.323556e-002, 5.346655e-002, -4.378468e-005, 9.607567e-003, -1.295568e-002, 1.572635e-002, 3.176515e-004, 1.051238e-001, -3.422411e-003, -9.693340e-002, -2.573429e-002, 2.821678e-002, -2.840478e-003, 1.550853e-002, 4.560561e-002, 3.990420e-003, -9.975869e-002, -9.891854e-002, 1.248558e-002, 8.639478e-002, 5.483743e-002, 1.362519e-002, -1.422014e-002, -4.452562e-003, 3.842794e-002, 3.684748e-002, -2.022238e-002, -1.478252e-003, -2.167039e-003, 4.891241e-002, 5.036045e-002, 1.137961e-001, -1.424842e-002, -9.577334e-002, -4.645190e-002, 1.699982e-003, 5.243005e-004, 1.787500e-002, 2.364856e-002, -2.933747e-002, -5.775008e-002, -6.303156e-002, -1.685061e-002, 6.312425e-002, 8.299006e-002, 7.027738e-003, -5.125252e-002, -2.440052e-002, 2.527244e-002, 4.786470e-003, -4.615451e-002, -9.186562e-003, -1.223054e-002, 1.563838e-002, 2.174418e-002, 8.998537e-002, -5.054186e-003, -5.324743e-002, -1.843475e-002, 1.510254e-002, 3.543256e-002, 7.003460e-002, 4.689503e-002, -2.032255e-002, -5.394426e-002, -6.008458e-002, -3.414448e-002, 1.432759e-002, 6.107614e-002, 1.261585e-002, -5.745437e-002, -2.527390e-002, 1.359194e-002, -2.591449e-002, -6.665251e-002, -1.769069e-002, -5.484608e-002, -5.149885e-002, -2.428581e-002},
{-5.168767e-002, -1.945363e-002, 1.676645e-002, 4.783186e-002, 6.187061e-002, 6.891947e-002, 5.293955e-002, 2.843604e-002, 3.059963e-002, 2.665849e-002, 4.203430e-003, -3.514228e-002, -5.314025e-002, -3.633041e-002, 1.153265e-002, 5.633873e-002, 7.056666e-002, 5.752337e-002, 3.081977e-002, 7.224884e-003, 2.497246e-003, 2.386550e-002, 6.982572e-002, -2.717922e-002, -


© ISO/IEC 2004 — All rights reserved

--`,,```,,,,````-`-`,,`,,`,`,,`---
Copyright International Organization for Standardization
Provided by IHS under license with ISO
No reproduction or networking permitted without license from IHS
Not for Resale

1.657046e-002, -1.837868e-003, 1.582274e-002, 8.528955e-003, -1.934091e-003, -9.002174e-003, -2.578837e-002, -5.281452e-002, -3.628948e-002, 1.091106e-002, 3.012944e-002, 9.749225e-003, -1.643748e-002, -1.730697e-002, 1.296309e-002, 5.772408e-002, 6.379852e-002, 2.474464e-002, 7.751001e-005, -1.397276e-002, -1.561521e-002, -2.341423e-002, 3.590146e-002, -3.003512e-002, 4.588554e-002, 5.497781e-002, 4.953455e-002, -1.940098e-002, -8.073283e-002, -1.097867e-001, -1.382462e-001, -1.594151e-001, -7.828338e-002, 3.797676e-002, 7.232361e-002, 3.870344e-002, -1.537040e-002, -3.985143e-002, -8.742686e-003, 4.303231e-002, 5.303437e-002, 6.481971e-003, -3.235763e-002, -3.315216e-002, -4.187646e-002, -5.998495e-002, -2.141772e-003, -2.277181e-002, -3.203147e-002, 1.333466e-002, 4.523095e-002, -5.685117e-003, -7.052642e-002, -1.167599e-001, -1.461479e-001, -1.457709e-001, -2.168946e-002, 8.484705e-002, 4.898290e-002, -2.894539e-002, -5.610666e-002, -4.499630e-002, -1.021396e-002, 3.890132e-002, 4.694154e-002, -5.927436e-003, -5.523944e-002, -4.160372e-002, -2.071685e-002, -4.467981e-002, -2.497415e-002, -6.646314e-003, -4.828349e-002, -3.512676e-002, 2.187385e-002, 6.377175e-002, 5.724689e-002, 2.377797e-002, -7.201436e-003, 6.959253e-003, 8.410824e-002, 6.643267e-002, -6.254551e-003, 9.771795e-005, 3.569561e-002, 1.673709e-002, -1.612814e-002, -1.725303e-002, -1.122517e-002, -2.926269e-002, -3.974129e-002, -1.760768e-002, 2.266278e-002, 1.887596e-002, -6.709054e-003, 8.573965e-003, 7.419831e-002, -2.795805e-002, -6.761887e-002, 3.707298e-002, 1.157590e-001, 8.786528e-002, 4.525748e-002, 8.834544e-002, 9.543889e-002, -5.378695e-002, -3.579393e-002, 7.933020e-002, 8.316971e-002, 1.086720e-002, -3.194072e-002, -4.427920e-002, -6.350162e-002, -6.129421e-002, -3.277389e-002, 9.619743e-003, 1.282475e-002, 3.894896e-002, 9.016664e-003, -1.433291e-002, 1.195320e-001, 5.142907e-002, -9.266415e-002, -1.122269e-001, 5.654045e-002, 3.526507e-003, -3.589084e-002, 5.829493e-002, 1.316055e-002, -1.215773e-001, -2.184666e-002, 6.226672e-002, 2.398014e-002, -2.216890e-002, 2.460097e-002, 5.408545e-002, -9.885162e-003, -4.440268e-002, 8.889873e-003, 3.221111e-002, -1.564164e-002, 5.888513e-003, -5.738594e-003, -3.521646e-002, -6.406788e-002, 6.576279e-002, -3.447635e-002, -7.962926e-002, 1.083453e-001, 5.818664e-002, 4.802702e-002, 1.099869e-001, 2.677985e-002, -4.901048e-002, 3.922145e-002, 3.309319e-002, -5.039211e-002, -4.154696e-002, 2.345075e-002, 6.303683e-003, -3.114779e-002, -3.942359e-002, 1.587118e-002, 3.570760e-002, 4.817657e-004, 7.372328e-003, 6.332134e-003, -2.434859e-002, -1.502479e-001, 8.365340e-002, 2.743900e-002, -1.709338e-002, 1.185751e-001, 1.820616e-002, 4.538819e-004, 3.261013e-002, 3.363355e-002, 2.781370e-002, 1.151640e-001, 1.005065e-003, -9.431794e-002, 2.909823e-003, 2.680439e-002, -4.835126e-002, 2.437161e-002, 5.369369e-002, 4.406159e-002, 3.170283e-002, -2.467010e-002, -1.007100e-002, 7.639695e-003, -1.478088e-002, 7.823752e-003, 7.559125e-002, 1.036590e-002, -5.610178e-002, 2.400565e-002, -6.892927e-002, -6.005889e-002, -6.149450e-002, -6.632359e-002, -5.906018e-002, 5.626405e-002, 1.113337e-002, -5.652786e-002, -1.316529e-002, 2.894701e-002, 3.421851e-002, 5.457777e-002, 6.247574e-002, 5.589546e-002, 1.459290e-002, -1.389897e-002, -1.159671e-002, -4.690740e-004, 7.818401e-003, 5.914138e-002, 6.347867e-002, -3.541424e-002, -6.914578e-002, -1.974914e-002, -6.596317e-002, -4.390030e-002, -3.212041e-002, -1.088019e-001, -1.075255e-001, -2.481470e-002, 1.532143e-002, -4.805115e-002, -1.052064e-001, -1.260793e-001, -1.142399e-001, -8.841868e-002, -3.750227e-002, -1.305262e-003, -1.485295e-002, -8.947735e-003, -8.094667e-003, -1.064952e-002, 2.516991e-002, 6.627060e-002, 2.183397e-002, -5.079836e-002, -1.509937e-002, 1.457191e-002, -1.092299e-002, 3.531352e-003, 3.476574e-002, -3.946375e-002, -5.306005e-002, -6.655192e-002, -2.925945e-003, 4.040265e-002, 1.937413e-002, -1.874408e-002, -4.822440e-002, -6.625196e-002, -5.720069e-002, -4.272053e-002, -2.515639e-002, 5.986696e-003, 7.989724e-004, -4.551987e-003, 1.242080e-002, 2.254179e-002, -9.199214e-003, -1.883960e-002, 5.550873e-002, 5.951214e-002, 1.943772e-002, 1.721953e-002, 7.131231e-002, 3.659683e-002, 1.648849e-002, 8.360717e-003, -3.608062e-002, 2.254175e-004, 3.604011e-002, 3.399383e-002, -3.304509e-003, -3.947623e-002, -4.915989e-002, -3.196107e-002, -2.142549e-002, 1.216117e-002, -1.431806e-004, 2.173179e-002, -1.435670e-002, 2.378802e-002, -1.465657e-003, 2.722942e-002, 5.346949e-002, 2.578597e-002, -2.758770e-002, -2.733483e-002, 2.265080e-002, 2.722964e-002, 3.115166e-002, 5.593236e-002, 2.162973e-002, -4.266005e-006, 2.678033e-002, 4.635907e-002, 4.472556e-002, 2.718842e-002, 1.194607e-002, -1.067311e-002, -1.639230e-002, 3.444222e-003, -5.004610e-003, 3.651754e-002, -1.447940e-002, -2.138508e-002, -3.146542e-002, -1.231012e-002, 1.000447e-002, -2.636377e-002, -5.541915e-002, -5.447259e-002, -3.930088e-002, -1.316769e-002, 4.067555e-002, 3.778903e-002, -7.957508e-003, -8.346853e-003, 2.562757e-002, 5.841343e-002, 6.735482e-002, 5.390177e-002, 1.530788e-002, -7.685739e-003, -1.638186e-002, -1.512277e-002, -1.076778e-002, 2.287283e-002, 3.084466e-003, -5.257215e-002, -3.805437e-002, -1.763782e-002, 5.309356e-002, 1.350656e-002, -8.872070e-003, -1.299595e-002, -1.040142e-002, 1.150367e-002, 5.335672e-002, 2.429072e-002, -4.861194e-002, -6.860545e-002, -4.093252e-002, -4.381734e-003, 1.559075e-002, 1.694557e-002, -8.300881e-003, -2.822761e-002, -1.694859e-002, -2.142473e-002, -2.077900e-002, 2.378609e-003, 6.232951e-003, -2.642681e-002, -3.439480e-002, -2.031102e-002, 3.238124e-002, -1.287476e-002, -1.870909e-002, 8.334566e-003, 4.882407e-003, 6.424637e-003, 3.363565e-003, -1.354768e-002, -5.154211e-002, -5.744381e-002, -4.887671e-002, -2.887113e-002, -1.192050e-002, -4.596532e-003, -1.806208e-002, -2.000092e-002, -6.593717e-003, -2.147080e-002, -3.467232e-002, -2.331757e-002, 1.851112e-002,

© ISO/IEC 2004 — All rights reserved
--`,,```,,,,````-`-`,,`,,`,`,,`---


Copyright International Organization for Standardization
Provided by IHS under license with ISO
No reproduction or networking permitted without license from IHS
Not for Resale

3.846749e-002, 1.088807e-002, -3.704083e-002, -3.550895e-002, -1.524568e-002, 8.875976e-003, 1.844912e-002, -7.755161e-004, 1.635011e-002, 6.933630e-003, -7.042692e-003, -4.565707e-003, 4.645243e-003, 2.835677e-004, 8.392626e-003, 2.143099e-002, 1.783300e-002, -6.462197e-005, 9.156056e-003, 1.912671e-002, -1.283364e-002, -3.667490e-002, -2.890901e-002, 1.347105e-002, 9.130692e-002, 5.059683e-002, 1.365706e-003, -5.101537e-003, -3.758187e-002, -2.834890e-002, -1.357575e-002, 4.095217e-002, 1.664584e-002, -2.024762e-002, 1.276466e-002, 6.558562e-002, 6.300760e-002, 3.904992e-002, 3.843145e-002, 4.699317e-002, 3.279367e-002, 1.587312e-002, 3.607420e-002, 3.157257e-002, -5.974870e-003, -2.204181e-002, -5.024358e-002, -1.195102e-002, 6.510599e-002, 2.275844e-002, -2.412315e-003, 1.658099e-002, 3.638105e-002, 3.189590e-002, 1.421636e-002, 4.919588e-002, -8.375017e-003, -6.178584e-002, -2.228032e-002, 6.670262e-002, 6.803995e-002, 2.696730e-002, 1.793599e-002, 3.204734e-002, 1.957918e-002, 1.995169e-002, 4.676356e-002, 4.329375e-002, 1.878726e-002, 7.974961e-003, -1.144498e-002, -1.159200e-002, -2.093891e-002, -6.585288e-002, -7.807527e-002, -5.954036e-002, -4.376893e-003, 2.529412e-002, -5.482616e-003, -3.343680e-003, -5.534915e-002, -9.111379e-002, -5.672723e-002, 1.512141e-002, 2.251396e-002, -7.063876e-003, -2.190327e-002, -7.322953e-003, 2.329791e-004, 2.851439e-002, 5.351601e-002, 4.727452e-002, 3.938521e-002, 6.763819e-002, 7.475483e-002, 1.183861e-002},
{4.571121e-002, 6.356538e-002, 7.265468e-002, 7.377191e-002, 6.117549e-002, 5.965184e-002, 5.865433e-002, 4.422893e-002, 3.486465e-002, 2.907100e-002, -1.123358e-003, -4.373938e-002, -6.215584e-002, -4.446428e-002, -6.326219e-003, 3.081391e-002, 4.018929e-002, 1.143268e-002, -2.683201e-002, -3.916014e-002, -1.795855e-002, -4.093601e-002, -1.994290e-002, 1.173910e-002, -1.393970e-002, 2.866482e-003, 1.981517e-002, 2.914788e-002, 7.398548e-003, -3.942666e-003, -8.344114e-003, -2.888641e-002, -3.298857e-002, -2.906372e-002, -4.940877e-002, -8.026352e-002, -8.159996e-002, -3.949643e-002, 9.281357e-003, 5.618223e-002, 7.996691e-002, 6.292849e-002, 2.155714e-002, -1.070194e-002, 6.403053e-004, -1.158292e-002, -1.275971e-002, 1.871672e-002, -5.264212e-002, -3.753304e-002, -1.683852e-002, -4.097419e-003, -2.501238e-002, -3.921275e-002, -4.707857e-002, -5.477120e-002, -4.011027e-002, -4.208699e-003, 2.382144e-003, -2.175689e-003, 2.301753e-003, 2.914454e-003, 1.724351e-002, 3.938063e-002, 5.038900e-002, 4.775964e-002, 2.367139e-002, 7.261353e-003, 7.885284e-003, 1.353332e-002, 4.795360e-003, -2.364243e-003, -2.983395e-002, -1.270707e-002, 4.120642e-003, 2.908116e-002, 3.180395e-002, 3.101864e-002, 2.625175e-002, 1.853898e-002, 2.877999e-002, 2.696387e-002, -1.282514e-002, -6.233750e-002, -6.259579e-002, -4.575731e-002, -1.578235e-002, -6.724972e-003, -2.116483e-002, -3.351819e-002, -3.466027e-002, -1.225662e-002, -2.055733e-003, 1.249354e-002, -1.726208e-003, -1.649698e-002, -7.435971e-002, -1.224568e-002, 3.782253e-002, 4.408443e-002, 6.198168e-002, 6.523203e-002, 8.761867e-002, 7.571219e-002, 3.772919e-002, -1.689419e-002, -8.628367e-002, -7.358615e-002, -1.689204e-002, 3.960772e-002, 6.880742e-002, 4.298199e-002, -2.381349e-002, -6.390199e-002, -4.686605e-002, -5.988922e-003, -1.773688e-002, -2.472510e-003, -2.069410e-002, -6.345177e-003, -1.284334e-001, -2.643533e-002, 5.606855e-002, 6.861641e-002, 1.056189e-002, -1.491977e-002, 4.194474e-002, 5.228753e-002, 3.983030e-002, 3.131291e-002, 2.701407e-002, -7.135763e-003, -6.482070e-002, -7.618899e-002, -8.333786e-002, -1.013610e-001, -1.223766e-001, -1.268315e-001, -3.882003e-002, 4.795662e-002, 4.744791e-003, -1.041858e-002, -2.857344e-002, 2.475583e-002, -1.940927e-002, 7.938978e-002, 1.360489e-001, 7.325081e-002, -4.406288e-002, -1.072041e-001, -5.552231e-002, -6.279660e-003, 4.164516e-002, 1.171308e-001, 1.649901e-001, 5.728057e-002, -3.026902e-002, 2.456938e-002, 5.223482e-002, 2.949705e-002, -6.942029e-003, -4.653145e-002, -4.761034e-002, 5.059649e-002, 5.937233e-002, 4.346915e-002, 6.904768e-003, 4.288152e-002, -4.955835e-002, 6.784713e-002, 4.706320e-002, -3.402459e-002, -6.722944e-002, -1.202924e-001, -5.637948e-002, -4.208754e-002, -6.416171e-002, -1.033972e-002, 5.806677e-002, 2.445278e-002, -7.550716e-002, 6.191867e-002, 7.138325e-002, -6.090271e-002, -3.089509e-002, 5.913852e-002, 1.633057e-002, -1.290528e-002, 2.308748e-002, 3.794754e-002, -1.991504e-003, 1.106128e-002, -1.491468e-002, 4.394491e-003, -8.256568e-002, -8.319166e-002, 4.400823e-003, -3.166136e-002, 2.572703e-002, -1.822448e-002, -9.480345e-002, -9.551596e-002, -4.354922e-002, 5.738494e-002, -5.512915e-002, -7.228555e-002, 5.626974e-002, 1.003339e-001, 7.626520e-002, 6.514378e-002, 2.625136e-002, -1.051038e-002, 3.371898e-002, 4.172822e-002, 1.531865e-002, 3.447273e-002, 1.012614e-002, -2.853782e-002, -6.493349e-002, 1.459550e-002, 3.825690e-002, 4.046491e-003, 6.031556e-002, 2.053506e-002, -3.653634e-002, 7.479013e-003, -1.232526e-002, 3.983726e-002, 2.108616e-002, -7.075792e-002, -6.057689e-002, 1.335565e-002, 5.151823e-002, 9.524154e-002, 7.516248e-002, 2.694530e-002, 6.104655e-002, 4.180068e-002, 3.868418e-002, 3.081065e-002, -1.223838e-003, -2.048215e-002, -5.543708e-004, 8.357057e-002, -1.007164e-002, -2.450868e-002, 8.782361e-003, 1.710988e-002, 9.938923e-003, 9.146966e-002, 1.237450e-002, 1.406181e-002, -1.012175e-002, -7.609472e-002, -1.101809e-001, -6.851211e-002, -9.647160e-003, 3.001021e-002, 2.901318e-002, 8.326332e-003, 2.855343e-002, 2.948519e-003, 3.402961e-002, 7.466532e-003, 2.628594e-002, 3.169547e-002, 8.407322e-002, 7.541766e-002, -3.211575e-002, -3.123163e-002, -1.952799e-002, -2.572412e-003, 3.249728e-002, 1.134068e-001, 9.194924e-002, 1.544327e-002, 1.872549e-002, -9.949344e-003, -4.338268e-002, -3.391358e-002, -2.081612e-002, -3.049109e-002, -4.083847e-002, -4.064931e-002, -1.802127e-002, -2.461596e-002, 1.171224e-002, -1.528777e-002,


© ISO/IEC 2004 — All rights reserved
--`,,```,,,,````-`-`,,`,,`,`,,`---

Copyright International Organization for Standardization
Provided by IHS under license with ISO
No reproduction or networking permitted without license from IHS
Not for Resale

5.750141e-002, 9.509186e-002, 1.136750e-001, 1.363177e-002, -7.530766e-003, -1.497860e-002, -2.201638e-002, -2.223808e-002, 2.614909e-002, 7.057362e-002, 7.940666e-002, 1.028027e-002, -4.161455e-003, -6.797776e-003, -1.861597e-002, -2.113388e-002, -1.866825e-002, -5.045453e-002, -7.352063e-002, -7.033372e-002, -5.028516e-002, -2.192850e-002, -1.912085e-002, -2.675506e-002, 5.685702e-002, 6.509838e-002, 7.087273e-003, 2.595162e-002, 2.510855e-002, -1.972256e-002, -1.347239e-002, -1.063153e-002, 2.358213e-002, 3.086634e-002, 9.848587e-003, -3.480643e-002, -2.692614e-002, -9.299537e-003, -5.561120e-003, 1.580808e-003, -7.751748e-003, -5.178507e-002, -8.245808e-002, -6.728640e-002, -5.484612e-002, -9.399455e-003, -2.983895e-002, -1.759657e-002, -1.303436e-002, -5.574946e-002, -3.759284e-002, 6.290653e-002, 2.529907e-002, -5.023542e-002, -1.700010e-002, 2.383174e-002, 4.476715e-002, 4.254874e-002, -1.562821e-002, -6.872110e-002, -6.062940e-002, -2.252259e-002, 4.874486e-004, 1.851789e-002, 1.203710e-002, -2.762628e-002, -4.798885e-002, -5.101579e-002, -4.297675e-002, 3.177409e-003, -2.179246e-003, 1.952346e-003, -6.566688e-002, -7.270238e-002, -3.083483e-002, 3.113120e-002, -1.622652e-002, -5.772742e-002, -1.236701e-002, 1.099638e-002, 8.044408e-003, 4.254471e-002, 2.509346e-003, -5.030401e-002, -3.865509e-002, -1.076034e-002, 2.403326e-002, 4.903461e-002, 4.779332e-002, 1.776232e-002, -3.625651e-003, -2.850528e-002, -3.128989e-002, 9.485292e-003, 1.796784e-002, 1.650559e-002, -2.530021e-002, -3.780013e-002, -1.937290e-002, 1.345397e-002, 2.292698e-002, 3.724254e-002, 6.391185e-002, 8.510035e-003, -6.120698e-002, -6.808802e-003, 1.100461e-003, -4.770092e-002, -2.786822e-003, 2.463395e-002, 4.632874e-002, 6.724798e-002, 5.016960e-002, 2.917896e-002, 1.948929e-002, -1.441020e-002, -2.031574e-002, -5.098875e-003, 2.300827e-002, 1.032771e-002, -1.771220e-002, -3.323952e-002, -3.590802e-002, -7.052932e-003, 9.578240e-003, 1.515230e-003, 2.160973e-002, -1.121791e-002, -3.744704e-002, 2.839895e-002, -2.330742e-002, -8.574001e-002, -1.185240e-002, 2.879455e-002, 4.391984e-002, 5.641327e-002, 3.292594e-002, 3.397007e-002, 3.263905e-002, -1.733694e-003, -1.481410e-002, -3.265440e-002, -2.326032e-003, -3.975762e-002, -5.312856e-002, -2.253669e-002, -1.059540e-002, -3.879642e-002, -2.015227e-002, 1.172686e-002, 5.771968e-002, 4.865204e-002, -1.616970e-002, 4.580963e-003, -4.430894e-002, -8.620622e-002, -2.408071e-002, 1.592267e-002, 2.098490e-002, 1.605261e-002, -9.518123e-005, 2.468518e-002, 3.681025e-002, 7.588732e-003, -6.992916e-004, -5.116892e-002, -9.776388e-003, -7.895518e-002, -6.481348e-002, -9.980156e-003, 7.342367e-003, -4.928527e-002, -4.790767e-002, -3.162882e-003, 5.502789e-002, 7.588402e-002, -7.800927e-003, -3.164911e-002, -4.438598e-002, -5.217158e-002, -8.960465e-003, 2.542285e-002, 9.156073e-003, -2.182723e-002, -2.539598e-002, 2.212782e-002, 4.532748e-002, 3.176558e-002, 1.175218e-002, -4.715712e-002, 2.675295e-002, -8.730580e-002, -4.818262e-002, 1.268619e-003, 1.599009e-002, -9.807930e-003, -1.279617e-002, -6.124977e-003, 1.126762e-002, 7.821292e-002, 5.441575e-002, 2.387404e-002, 1.081853e-002, -4.764007e-003, 9.230052e-003, 4.600528e-002, 1.251858e-002, -4.265097e-002, -3.237166e-002, 3.261125e-002, 5.982655e-002, 5.053589e-002, 1.338651e-002, -1.937949e-002, 6.643577e-002, -1.047069e-001},
{1.481721e-001, 1.016760e-001, 3.583344e-002, -3.018929e-002, -6.637643e-002, -7.690160e-002, -5.537756e-002, -2.194827e-002, 1.394930e-003, -9.346350e-003, -2.602548e-002, -1.317745e-002, 9.085699e-003, 3.469864e-002, 1.512895e-002, -4.033574e-002, -6.964577e-002, -3.202046e-002, 7.283032e-002, 1.550728e-001, 1.308699e-001, 3.767590e-002, 3.917740e-002, 9.515394e-002, 3.372224e-002, 1.776072e-002, -1.675066e-002, -5.254223e-002, -7.750881e-002, -7.897601e-002, -5.618228e-002, 4.333011e-003, 4.272356e-002, 2.192562e-002, -3.299085e-003, 5.159511e-003, 3.806639e-002, 8.840208e-002, 9.251034e-002, 4.520778e-002, -2.914105e-002, -7.221669e-002, -3.165423e-002, 1.249263e-002, 3.084011e-002, -1.529247e-002, 2.556612e-003, 1.078352e-002, -9.913682e-002, -5.095001e-002, -8.544496e-003, 4.390607e-003, -1.483319e-002, -3.594623e-002, -2.034110e-002, 5.719523e-002, 9.366703e-002, 3.173189e-002, -4.811148e-002, -6.766177e-002, -3.414926e-002, 2.852018e-002, 7.738978e-002, 7.902144e-002, 3.906566e-002, -4.356501e-003, -4.019039e-002, -8.745071e-002, -7.748025e-002, -5.749104e-002, -1.281156e-002, -4.487657e-002, -8.799345e-002, -2.397522e-002, 7.891064e-002, 1.306268e-001, 8.361089e-002, 5.031368e-003, -1.129574e-002, 6.862821e-002, 1.126889e-001, 1.862454e-002, -6.982512e-002, -6.764134e-002, -3.309656e-002, -4.073601e-003, -6.042720e-003, -3.532523e-002, -8.244337e-002, -5.577327e-002, 3.821118e-002, -3.756347e-002, -8.847299e-002, -4.311134e-002, -6.357882e-003, -6.846548e-002, -2.014340e-002, -3.470886e-002, 2.218937e-002, 9.904009e-002, 4.108476e-002, -7.854557e-002, -9.616360e-002, -1.391263e-002, 6.058330e-002, 2.156118e-002, 1.435542e-003, 1.307203e-002, 2.197832e-002, 3.889301e-002, 3.502896e-002, 1.759461e-002, -4.320031e-002, -9.298422e-002, -3.531932e-002, 6.868987e-004, -2.550895e-003, 3.247296e-002, 1.353741e-002, -4.376433e-002, 5.290519e-002, 1.463185e-002, -3.383187e-002, 5.321439e-003, -8.817455e-003, -8.853633e-002, -8.767966e-002, -4.306260e-002, 2.378739e-003, 1.787601e-002, 1.864387e-002, 2.422103e-002, -1.317893e-003, -2.261014e-002, -1.973397e-003, 4.737830e-002, 6.769963e-002, 3.102002e-002, 8.525042e-003, -1.435625e-002, 9.473339e-004, 6.815966e-002, 1.420821e-002, -4.075952e-002, 4.810463e-002, -2.876497e-002, -7.262582e-002, -5.212796e-002, -1.875082e-002, 6.730616e-003, 6.035728e-002, 2.129615e-002, -4.890922e-002, 2.946092e-003, -1.806561e-002, 6.654407e-003, 3.589855e-002, 1.104343e-002, 1.185756e-003, 1.996900e-002, -1.000706e-002, -2.816520e-002, 2.810568e-002, 3.492096e-002, -3.247437e-002, 1.250397e-002, -9.290521e-003, 7.983552e-003,

© ISO/IEC 2004 — All rights reserved


Copyright International Organization for Standardization
Provided by IHS under license with ISO
No reproduction or networking permitted without license from IHS
Not for Resale

6.242287e-002, -5.330051e-002, -4.665128e-003, 2.429201e-002, -1.889950e-002, 2.124422e-002, 7.499181e-002, 1.534605e-002, -5.942135e-002, 6.074743e-002, -4.780710e-002, -1.098145e-001, 3.219996e-002, 1.428677e-002, -1.532851e-002, 6.760726e-002, 1.278340e-002, -8.084515e-002, -2.191998e-002, 5.676350e-002, 1.060887e-002, -1.096164e-002, -7.448040e-003, 4.478691e-002, -3.467090e-003, -3.384986e-002, 1.066796e-001, 1.437226e-001, 4.492552e-002, 5.906238e-002, 7.351841e-002, 5.523309e-002, 3.849103e-002, 8.809183e-002, -8.318246e-002, -1.507761e-001, -7.938751e-003, 6.866879e-002, 8.372144e-002, 1.462187e-002, -4.907940e-002, -5.315951e-002, -3.073939e-002, 2.285966e-002, 1.730736e-002, -2.308723e-002, -1.444229e-002, 5.250715e-002, -4.757189e-002, -2.593665e-002, 9.665803e-002, 1.052995e-001, 6.336730e-002, 2.069737e-004, 1.332071e-002, 4.153011e-002, 5.220334e-002, 6.994391e-002, -2.802343e-002, -6.267411e-002, 4.293305e-003, 9.986217e-002, 1.116329e-001, -1.018683e-002, -8.760992e-002, -5.814901e-002, -6.288157e-002, -6.473894e-002, -3.226403e-002, -6.864836e-002, -1.421965e-002, 2.734433e-002, -1.073762e-001, -5.893856e-002, 2.369665e-002, 5.513321e-005, 1.333198e-002, -5.263237e-002, -3.977686e-002, 7.681278e-004, 2.375211e-002, 5.459795e-002, 1.645315e-002, -3.242176e-002, -1.813257e-002, 6.179805e-003, 1.816053e-002, -1.691843e-002, -5.299059e-002, -5.103595e-003, -1.483303e-002, -4.833665e-002, 5.495509e-003, -4.946605e-002, -1.233546e-002, 3.774996e-003, -8.049240e-002, -4.454719e-002, -3.101448e-002, -2.839743e-002, -3.375201e-002, -5.664181e-002, -4.578763e-002, -3.731108e-002, -1.850146e-002, 4.645409e-002, 4.145333e-002, 7.827966e-003, 1.300873e-002, 2.565677e-002, 3.400045e-002, 1.574837e-002, -1.791615e-003, 3.550200e-002, 2.494056e-002, -1.658888e-003, 4.007505e-002, -1.736806e-002, -1.397339e-002, -2.093251e-002, -3.436698e-002, -4.382969e-004, -1.971053e-002, -2.727656e-002, -2.457159e-002, -1.552272e-002, 7.388035e-004, -2.066391e-002, -5.543474e-002, -3.265806e-004, 2.330194e-002, 8.371966e-003, -8.693003e-004, 1.087163e-002, 1.471276e-002, 4.561170e-003, -4.618819e-003, 2.379302e-002, 1.585378e-002, 4.671373e-003, 4.702564e-002, -1.203787e-002, 1.103878e-003, -3.011972e-002, 4.182444e-002, 4.632045e-002, -2.907225e-002, -3.257750e-002, 3.124848e-002, 4.094515e-002, 4.382709e-002, 2.735702e-002, -3.291188e-002, -6.252972e-002, -2.061068e-002, -9.373699e-003, -2.589297e-002, -2.805713e-002, -2.927722e-002, -2.933217e-002, -1.481791e-002, 1.320535e-002, 2.651839e-003, -1.026686e-002, 7.272394e-003, -2.070034e-002, 9.313017e-004, -3.983534e-002, 6.850859e-002, -4.208622e-004, -7.356763e-002, 9.908913e-004, 3.888159e-002, 3.975602e-002, 6.368594e-002, 5.755139e-002, 5.709870e-003, -3.531655e-002, -6.546615e-002, -3.249895e-002, -4.468796e-002, -4.089900e-002, -2.779962e-002, -1.775811e-002, 2.371862e-003, 6.021809e-003, -2.085956e-002, -4.360328e-002, -2.499561e-002, -1.628936e-002, -2.254994e-003, -2.900982e-002, 2.624087e-002, -4.784048e-002, -3.298932e-002, -9.889020e-003, -1.612655e-002, 2.013355e-002, 6.591921e-002, 3.335957e-002, 1.747967e-002, 4.502267e-002, -1.969859e-002, -1.995367e-002, -3.584264e-002, -2.290636e-002, 4.331190e-003, 1.190982e-002, 1.807966e-002, 1.721641e-004, -4.450226e-002, -6.002216e-002, -4.098575e-002, -2.004998e-002, 1.104391e-002, -1.966932e-002, -1.207855e-002, -2.314953e-003, 2.695244e-002, -1.316839e-002, 1.451196e-003, 4.378690e-002, 3.439778e-002, -1.768097e-002, -2.304536e-002, 6.204814e-002, 1.245246e-002, -5.313165e-003, -2.286364e-002, -1.757804e-002, 1.580343e-002, 3.574275e-002, 3.208856e-002, -4.584028e-003, -4.757481e-002, -5.548720e-002, -4.380531e-002, -2.053650e-002, -1.140600e-004, -2.095037e-002, -2.314712e-002, 1.182867e-002, 1.636426e-002, 2.430065e-002, 1.021016e-002, -3.211727e-002, -4.193156e-002, -3.534798e-002, -3.645311e-003, 9.809091e-004, -2.589323e-002, -2.651469e-003, -6.062995e-004, -2.145674e-002, -9.866721e-003, 1.200202e-002, 1.405200e-002, -1.026761e-002, -3.603280e-002, -2.393215e-002, -2.574241e-002, -6.493076e-003, -3.662450e-003, -2.407951e-002, -2.326853e-002, -1.368075e-002, -2.569982e-002, 6.531892e-003, -3.290897e-002, -7.186372e-002, -2.480267e-002, 9.481395e-003, 4.232267e-002, 2.699569e-002, 1.655326e-002, 8.446645e-003, -1.220534e-003, -1.048838e-002, -1.997768e-002, 1.525184e-003, 7.342872e-003, -4.224625e-003, 8.606677e-003, 2.946348e-002, 7.200961e-003, 6.266721e-003, 4.240909e-003, -1.973724e-002, -2.317143e-002, 6.589661e-003, 2.846890e-002, 2.997863e-002, -3.593986e-002, -6.149779e-002, -2.224978e-002, -1.706514e-002, -8.694176e-003, 4.011699e-002, 6.352893e-002, 1.026621e-002, -3.143446e-002, -8.827802e-003, -9.738330e-003, 1.844967e-003, 1.026025e-002, 2.357273e-002, 6.711844e-002, 9.298510e-002, 3.838506e-002, 3.067932e-002, 1.392127e-002, -5.987532e-003, -1.768907e-003, 3.056756e-002, 5.334383e-002, 4.189417e-002, -2.266521e-002, -4.736832e-002, -8.715789e-003, -8.790558e-003, -9.710652e-003, 4.225663e-002, 4.353046e-002, -3.542549e-003, -4.922651e-002, -3.543511e-002, 4.443458e-003, 2.389697e-002, 3.999018e-002, 6.396637e-002, 1.202341e-001, 1.352657e-001, 6.509900e-002, 5.935176e-002, 5.317515e-002, -1.130676e-002},
{-7.113158e-002, -4.318241e-002, -6.079251e-003, 2.102560e-002, 1.832907e-002, 6.142304e-003, -1.438780e-002, 1.209539e-002, 9.878161e-002, 1.404021e-001, 1.129701e-001, 4.724373e-002, -4.376237e-003, -3.671822e-002, -4.377469e-002, -4.910087e-002, -7.740700e-002, -9.769815e-002, -3.630203e-002, 3.346903e-002, 5.508179e-002, 6.409956e-002, 2.307101e-002, 6.304159e-002, -3.822701e-003, -5.862253e-003, -4.114029e-003, 4.679724e-003, -5.156243e-003, -3.787733e-002, -6.987797e-002, -4.669140e-002, 5.312134e-002, 1.127994e-001, 8.133443e-002, 4.789871e-003, -2.919675e-002, -1.998507e-002, 1.257079e-002, 3.398236e-002, 1.195440e-002, -4.102025e-002, -1.850732e-002, 4.389144e-002, 3.773085e-002, 3.307521e-002, -1.974845e-002, 1.048016e-002,


© ISO/IEC 2004 — All rights reserved
--`,,```,,,,````-`-`,,`,,`,`,,`---

Copyright International Organization for Standardization
Provided by IHS under license with ISO
No reproduction or networking permitted without license from IHS
Not for Resale

6.960940e-005, -2.064815e-002, -3.366151e-002, -2.749023e-002, -3.917790e-002, -8.178131e-002, -1.377995e-001, -1.129943e-001, -1.447026e-003, 3.382412e-002, -1.251025e-002, -5.848529e-002, -4.638049e-002, 1.445656e-003, 6.323403e-002, 8.729515e-002, 5.176484e-002, -6.762626e-003, 1.423602e-003, 5.245125e-002, 8.308465e-003, -1.443037e-003, -4.784616e-002, -3.470595e-002, 1.856255e-002, -2.451094e-002, -4.796970e-002, -1.775508e-002, 1.127915e-002, -2.491060e-002, -8.545433e-002, -5.659122e-002, 5.348243e-002, 5.050921e-002, -1.453831e-002, -4.276019e-002, -4.531410e-002, -2.061950e-002, 1.004427e-002, 4.420134e-002, 1.879492e-002, -4.666130e-002, -3.261868e-002, 2.135742e-002, -1.802493e-002, -3.135875e-002, -3.229565e-002, -3.665809e-002, 1.091632e-002, -2.342557e-002, -3.284123e-002, 2.114806e-002, 8.259245e-002, 6.879216e-002, 1.755394e-002, 2.622417e-002, 1.077862e-001, 6.122783e-002, -1.409849e-002, -5.068334e-002, -6.823859e-002, -6.041428e-002, -3.222801e-002, 8.104173e-003, 3.804333e-002, 1.442101e-002, -8.876769e-003, 2.651867e-002, -1.222862e-002, 2.292110e-003, 1.425801e-002, 5.588490e-003, 3.271716e-002, 1.922894e-002, -2.679176e-002, -3.297523e-002, 1.030410e-002, 3.446946e-002, -1.175010e-003, -3.757812e-003, 3.728703e-002, -7.121227e-003, -3.455587e-003, 3.605008e-002, 4.538391e-002, -5.067512e-003, -6.198893e-002, -6.435569e-002, -2.433848e-002, 4.355321e-003, 2.666054e-003, 4.507225e-002, 1.004632e-002, 2.616697e-002, 4.119523e-002, 5.139152e-002, 2.402502e-002, 9.008237e-002, 8.594300e-002, -1.986089e-002, -7.082251e-002, 8.055562e-003, 1.450044e-002, -9.866223e-004, -2.332090e-002, -4.660010e-002, 2.036838e-002, 4.730068e-002, 3.689201e-002, 1.543790e-002, -4.024979e-002, -3.861645e-002, 2.360981e-002, -4.379197e-003, -5.273610e-002, -2.358003e-002, -1.159329e-002, 1.716432e-002, 1.729344e-002, 9.689480e-003, -1.775167e-001, -6.841434e-002, 7.013576e-002, 4.288620e-002, -1.009855e-001, -4.013674e-002, -3.633180e-002, -2.074559e-002, 2.081836e-003, -4.083573e-002, -2.689855e-002, -1.008098e-001, -7.675883e-002, 9.687468e-002, 1.834236e-002, -1.746571e-002, 1.910730e-002, 2.074492e-002, -3.017030e-002, -4.290825e-002, -2.996043e-002, -1.909992e-002, -1.949004e-002, -2.195735e-002, 3.669189e-002, -1.647084e-002, 2.573521e-002, 9.728470e-002, -3.573322e-002, -4.221793e-002, -4.400572e-002, -1.861625e-002, 6.292720e-002, 3.607395e-002, 3.171592e-002, 1.538268e-002, -3.905022e-002, 6.277206e-002, 3.388357e-002, 1.881439e-003, -7.258046e-002, -5.791563e-002, -3.083079e-002, -3.061322e-002, -1.569468e-002, -1.932116e-002, 7.119487e-004, 6.367287e-002, 4.458749e-002, -9.566177e-003, -2.253917e-002, 9.503686e-002, 6.000302e-002, 4.219102e-002, 7.371220e-003, 1.963673e-002, 4.386207e-002, 1.336266e-002, 5.285940e-004, 9.157696e-003, -2.255030e-002, -6.879889e-002, -4.747292e-002, 2.120479e-002, 2.220579e-002, 2.165304e-002, 4.368000e-002, 1.643763e-002, 2.973961e-003, -2.152117e-002, -3.385468e-002, 3.026778e-002, 1.836932e-002, -8.534803e-002, -9.516423e-002, 3.326302e-002, 5.253967e-002, 1.891129e-002, -2.656100e-002, 1.458493e-002, 3.328885e-002, -3.563039e-002, -4.817543e-002, 2.444916e-002, 2.318664e-002, -5.862258e-003, -3.859018e-003, 2.970146e-002, 5.004133e-002, 3.074034e-002, 2.927674e-002, 1.177907e-002, -8.676534e-003, -2.717733e-002, -5.828825e-002, -1.939408e-002, 1.256129e-002, -6.756164e-002, -5.389180e-002, -1.947414e-002, -3.095023e-003, -2.915531e-002, -6.721553e-002, -3.093595e-002, 2.059314e-002, -1.328471e-002, -1.140389e-001, -2.823305e-002, 5.987564e-002, 7.521660e-002, 7.197246e-002, 6.999751e-002, 4.554523e-002, -1.534944e-002, -4.207687e-002, -3.945082e-002, -4.764400e-003, 2.100686e-002, -8.800626e-003, -4.747701e-002, 4.128960e-002, -1.202788e-002, -6.310526e-002, -4.911406e-002, -2.224910e-002, -1.993295e-002, -4.334780e-002, -3.510501e-002, -8.680225e-003, 2.226262e-002, -8.096435e-002, -1.252336e-001, -3.736572e-002, 4.150140e-002, 6.289854e-002, 4.912908e-002, 9.488021e-004, -7.577975e-002, -8.991527e-002, -2.277975e-002, -5.096745e-003, 5.989241e-002, 3.807219e-002, -1.850701e-002, 6.729848e-002, -1.077064e-002, -5.558453e-002, -3.505189e-002, 2.234880e-002, 4.236399e-002, 6.856084e-003, 4.373993e-003, -1.747266e-002, -7.856053e-003, 2.575762e-002, -6.211018e-002, -9.263591e-002, -5.775275e-002, -1.717992e-002, 2.821878e-003, -1.706679e-002, -4.906234e-002, -3.398250e-002, 1.981229e-002, 1.016824e-002, 5.058340e-002, 2.283691e-002, 2.267295e-002, 6.101284e-002, 1.283304e-002, -2.877412e-002, -4.144038e-003, 6.433760e-002, 7.516775e-002, 3.876525e-002, 3.399155e-002, -2.120402e-002, -4.609153e-002, 3.382031e-003, 4.018067e-002, 2.202804e-002, 1.432340e-002, 3.313552e-002, 6.042658e-002, 5.999953e-002, 3.618211e-002, 5.204626e-002, 4.377298e-002, 4.033481e-003, 7.306538e-003, -1.086435e-002, 1.511366e-002, 6.005120e-002, 2.729048e-002, -4.339650e-002, -3.258554e-002, 2.570323e-002, 2.287952e-002, 2.008604e-002, 1.835510e-002, -5.758791e-002, -5.593138e-002, -2.204737e-002, 3.949636e-003, -2.117529e-003, 5.228588e-003, 1.479254e-002, 4.190827e-002, 5.763004e-002, 5.157925e-002, 6.002928e-002, 3.032815e-002, -2.263478e-002, -2.478909e-002, -2.897433e-002, -2.859656e-002, 6.393306e-002, 3.621367e-002, -9.556194e-003, 1.029124e-002, 3.304650e-002, -6.106999e-004, -2.006578e-002, -2.402490e-002, -4.805148e-002, 4.242987e-002, 8.878636e-002, 4.125354e-002, 7.298185e-003, -1.159892e-002, -9.094566e-003, 1.678082e-002, 3.018570e-002, 2.816534e-002, 4.546073e-002, 2.174267e-002, -4.053250e-002, -4.522919e-002, -1.301776e-002, -2.430616e-002, 2.389014e-002, 4.744570e-002, 4.824359e-002, 4.324008e-002, 4.122811e-002, -3.420290e-003, -3.854716e-002, -2.549479e-002, -6.607059e-002, 4.213989e-002, 1.515244e-001, 8.656883e-002, 4.889937e-002, 3.715988e-002, 1.908911e-002, 2.144508e-002, 1.291402e-002, 1.190150e-002, 3.085331e-002, 1.194338e-002, -3.588127e-002, -2.381688e-002, 2.780959e-002, -2.130418e-003, -

© ISO/IEC 2004 — All rights reserved


Copyright International Organization for Standardization
Provided by IHS under license with ISO
No reproduction or networking permitted without license from IHS
Not for Resale

5.363156e-002, 9.269004e-003, 4.563107e-002, 2.008819e-002, 3.161559e-002, -1.598155e-003, -2.620238e-002, 3.995438e-002, 2.416675e-002, 3.649598e-002, 8.411459e-002, 1.914176e-002, -1.126548e-002, 3.107040e-002, 3.950212e-002, 2.731659e-002, -8.467438e-003, -8.552109e-003, 1.922448e-002, 5.717711e-003, -1.778189e-002, 1.617093e-002, 2.420369e-002, 9.738656e-003, -9.498198e-002, -3.307730e-002, 8.361642e-003, 1.388379e-002, 3.123545e-002, -3.107339e-003, -2.501873e-002, 6.586913e-002, 6.972872e-002, -1.655691e-003, -2.757606e-002, -7.552139e-002, -1.080200e-001, -6.031892e-002, 1.052378e-003, 3.602864e-003, -3.417480e-002, -3.031925e-002, 6.749457e-003, 8.171762e-003, 2.056983e-002, 3.325503e-002, 5.105631e-003, 1.517342e-002, -7.560097e-002, -4.373841e-002, -1.263776e-002, 2.937038e-002, 5.432467e-002, 3.178817e-002, -1.606854e-002, 2.810079e-002, 3.155702e-002, -1.507182e-002, -5.287100e-002, -9.476762e-002, -1.372140e-001, -1.219569e-001, -4.708488e-002, -2.679806e-002, -4.899630e-002, -3.852701e-002, -6.321900e-003, 1.910153e-002, 3.012280e-002, -2.016840e-002, -4.527912e-002, 1.286259e-002},
{-9.715356e-002, -3.040655e-002, 1.415335e-002, 1.351246e-002, -5.592536e-003, -2.418407e-002, -1.018268e-002, 3.203216e-002, 8.094685e-002, 1.108715e-001, 9.254437e-002, 4.895623e-002, 2.039965e-002, 1.483823e-003, -1.608037e-002, -3.520164e-002, -5.277645e-002, -4.837336e-002, 8.998492e-003, 2.796079e-002, 2.509216e-003, 7.949987e-003, 5.044061e-002, 1.875809e-003, -7.815645e-002, -1.496659e-002, 3.072546e-002, 1.982874e-002, -9.524061e-003, -4.712517e-002, -4.793458e-002, -9.087403e-003, 3.958298e-002, 5.850503e-002, 3.022442e-002, -1.845005e-002, -3.881025e-002, -3.845232e-002, -2.551811e-002, -1.239123e-002, -2.861124e-002, -3.821123e-002, 1.272059e-002, 2.512492e-002, -1.365658e-002, -1.537407e-002, 3.755558e-002, 3.213332e-003, -1.529986e-002, 5.135826e-002, 8.357920e-002, 5.537479e-002, 1.402210e-003, -6.234027e-002, -7.863048e-002, -5.137718e-002, -3.457606e-003, 2.743979e-002, 3.554476e-002, 3.422424e-002, 3.915114e-002, 4.409200e-002, 5.690762e-002, 5.903257e-002, 1.904275e-002, -1.370953e-002, 2.831412e-002, 3.801319e-002, -2.687396e-002, -3.459770e-002, -2.180851e-004, -5.494361e-003, -7.530400e-002, -4.297887e-002, 9.157601e-003, 2.760209e-002, -5.988888e-003, -4.112225e-002, -5.205250e-002, -4.463705e-002, -2.687952e-002, -2.173384e-002, -1.500043e-002, -5.559449e-003, 1.301741e-002, 1.133220e-002, 2.156212e-002, 1.164709e-002, -2.965809e-002, -5.679577e-002, -8.343659e-003, 2.892088e-002, -4.604017e-002, -3.262724e-002, -4.123541e-002, -8.445933e-003, 1.040154e-001, 8.307544e-002, 1.316902e-002, -5.510088e-002, -6.545922e-002, -2.385342e-002, 2.253619e-002, 1.580711e-002, -3.939838e-002, -4.796205e-002, -8.830141e-003, 3.823576e-002, 6.396136e-002, 5.041257e-002, 9.433829e-003, -2.960703e-002, -5.763698e-002, -3.701109e-002, 2.514490e-002, 2.677163e-002, -4.372588e-002, -1.453381e-003, -4.586898e-002, -1.750681e-002, -3.772893e-003, 6.099243e-002, 4.063438e-002, -7.629797e-002, -1.293720e-001, -2.040278e-002, 9.709542e-002, 6.431892e-002, -4.070452e-002, -4.804426e-002, -6.890989e-003, -3.083528e-003, -3.700506e-002, -5.298789e-002, -4.369104e-002, -6.348585e-002, -1.199371e-001, -1.241479e-001, 1.430105e-002, 5.818592e-002, -9.559997e-003, 6.764862e-002, -4.743808e-003, -1.613680e-002, -1.157083e-001, -7.913894e-002, -9.781496e-003, -1.103232e-002, -1.385487e-002, 7.900859e-002, 1.528735e-001, 1.357469e-001, 5.394060e-002, 1.041818e-002, -4.764952e-003, -3.875874e-002, -7.025411e-002, -3.704018e-002, 3.663965e-002, 1.025008e-001, 9.526690e-002, 2.012254e-002, 8.137139e-003, 5.909508e-002, 5.129278e-002, 1.410126e-001, 6.302967e-002, 2.245204e-002, 2.631106e-002, 1.313551e-002, 7.959272e-003, 2.516877e-002, 7.879296e-002, 3.541374e-002, -1.271199e-002, -4.100007e-002, 2.597641e-002, 2.121280e-002, 2.057806e-002, 3.878881e-002, 2.160387e-002, -3.083945e-003, -1.124708e-002, -5.165895e-002, 3.389882e-002, 5.131893e-002, 3.096090e-002, 2.001541e-002, -2.134246e-002, 1.359672e-002, 4.347545e-002, 3.002889e-002, -1.035713e-001, -8.499947e-003, -2.457823e-003, 9.364415e-003, 3.099920e-002, -5.810467e-002, -9.565763e-002, -1.395097e-001, -7.146562e-002, 4.204622e-002, 2.340659e-004, -6.087813e-002, -9.837653e-003, 2.196078e-002, 3.580606e-003, 3.525247e-002, 6.636253e-002, -6.350960e-003, -3.481636e-002, -8.958377e-003, -4.755067e-002, -1.270635e-001, -5.645245e-002, -1.408057e-002, -7.160677e-002, -1.399046e-002, 1.466440e-002, -1.138177e-002, -5.250751e-002, -3.277493e-002, -7.768178e-004, -6.285523e-002, -8.373767e-002, 6.519985e-002, 2.154548e-002, -2.266473e-002, -1.530504e-002, 4.694254e-002, 4.280127e-002, 4.847824e-002, 7.151465e-002, 2.016825e-002, -1.578792e-002, -1.276725e-002, 7.672651e-003, -5.354500e-002, -5.340654e-002, -4.005048e-002, 3.349413e-002, 7.320506e-002, 5.305474e-002, -6.937204e-003, -1.032895e-001, -1.081932e-002, 3.482960e-002, -5.500591e-003, -6.544444e-002, 7.591889e-002, 8.942774e-002, 2.737016e-002, 1.460058e-002, 2.443011e-002, 1.949249e-002, 7.142927e-003, -7.484868e-003, -4.497039e-002, -5.758862e-002, -3.188234e-002, 1.270343e-002, -1.628924e-003, -2.239899e-003, -2.082394e-002, 4.504615e-002, 3.363595e-002, 2.864056e-002, -2.827468e-002, -5.825886e-002, -1.086820e-002, 2.490929e-002, 6.692048e-003, -3.431436e-002, -1.386650e-002, 1.029358e-001, 2.507816e-002, -3.920857e-002, -6.331566e-002, -7.039587e-002, -7.109590e-002, -6.676201e-002, -4.666330e-002, -1.755043e-002, -1.321256e-002, -2.613179e-004, 2.679324e-002, 3.101086e-002, -5.919323e-004, 7.255033e-003, 1.144200e-002, 3.067349e-002, -2.391315e-002, -5.216742e-003, -1.334811e-002, 1.136616e-002, -1.197350e-002, -9.463269e-003, -5.852860e-002, -4.194604e-002, -6.758728e-003, -3.919995e-002, -7.453056e-002, -8.325539e-002, -6.074907e-002, -2.546219e-002, 3.128276e-002, 5.573311e-002, 1.633535e-003, 1.211104e-003, 3.942009e-002, 3.266659e-002, 1.815413e-003,


© ISO/IEC 2004 — All rights reserved

Copyright International Organization for Standardization
Provided by IHS under license with ISO
No reproduction or networking permitted without license from IHS
Not for Resale

3.503225e-003, 2.476086e-002, 2.142113e-002, 3.204721e-002, 1.516795e-002, -1.403850e-002, 1.111537e-002, -1.306653e-002, -8.166788e-003, 2.332720e-002, -8.293273e-002, -1.227014e-001, -7.162051e-002, -4.265127e-002, -2.563134e-002, 1.962308e-003, 5.657123e-002, 1.026121e-001, 9.107777e-002, -7.063206e-004, 1.135718e-002, 4.218962e-002, 1.135825e-002, 4.592331e-003, 4.671758e-002, 1.100244e-002, -3.922807e-003, 4.713178e-002, 2.370297e-002, 1.388742e-002, 3.284599e-002, 3.613194e-003, -2.396441e-002, 6.675286e-002, 6.495614e-002, -6.888573e-002, -9.364811e-002, -5.371287e-002, -1.322013e-002, 3.993610e-002, 9.967744e-002, 1.105762e-001, 4.966732e-002, -1.981656e-002, 2.242583e-002, 3.767168e-002, 1.294398e-002, 2.485008e-002, 3.430881e-002, -4.467412e-002, -2.862133e-002, 2.410948e-002, 1.425210e-002, 1.701010e-002, 3.811233e-003, -5.893229e-003, -2.023685e-002, 2.865326e-002, 9.067675e-002, 4.063309e-002, 2.221946e-002, 3.571623e-002, 6.423375e-002, 9.300646e-002, 8.909476e-002, 5.056676e-002, -8.045349e-004, -3.337117e-002, 1.787581e-002, 1.259595e-002, 1.155063e-002, 2.533981e-002, 3.419441e-002, -3.032460e-002, -2.116686e-002, 3.933603e-002, 5.561578e-003, -1.412210e-002, 3.244106e-003, 2.742706e-002, 4.303684e-002, 1.465689e-002, 2.997113e-002, 2.271118e-002, 5.060975e-002, 4.509615e-002, 3.497043e-002, 2.040270e-002, -1.618164e-002, -4.833949e-002, -5.567552e-002, -3.964941e-002, -2.021280e-003, -2.965219e-002, 8.494765e-003, 1.634538e-004, 8.432847e-002, 6.086223e-003, -4.463935e-002, -1.835300e-002, -6.569837e-003, -1.009159e-003, 2.676950e-002, 2.506809e-002, -2.231188e-002, -5.503200e-002, -3.811569e-002, -2.818213e-002, 5.328852e-003, 1.605458e-002, -9.253240e-003, -3.906869e-002, -7.266397e-002, -7.520763e-002, -4.438009e-002, -1.871870e-002, -9.145714e-003, -4.229166e-002, 2.099628e-002, -1.295013e-002, 7.247755e-002, -4.757745e-003, -3.688462e-002, 1.199782e-002, 2.094546e-002, -5.921538e-002, -5.141052e-002, 3.448752e-002, 2.737984e-002, -3.560493e-002, -4.878145e-002, -2.996310e-002, -1.818081e-002, 1.028073e-002, 1.163115e-002, -2.179640e-002, -4.803829e-002, -3.966593e-002, -2.772813e-003, -1.305329e-003, -1.068022e-002, -2.196093e-002, 1.628745e-002, -3.647725e-002, -2.794098e-003, -3.432453e-002, -4.816499e-003, 3.282805e-002, -2.818689e-002, -8.084099e-002, -5.446322e-002, 4.464309e-002, 1.268571e-003, -4.254061e-002, -2.226020e-002, 1.000439e-002, -1.703945e-002, -1.128750e-002, 2.803378e-002, 7.814079e-003, -1.319611e-002, 7.915994e-003, 3.692158e-002, 1.515106e-002, -1.226427e-002, -8.473982e-003, -8.715153e-003, -4.477134e-002, -2.965904e-002, -1.855968e-002, 4.257357e-002, 7.122115e-002, 5.098574e-002, 2.626061e-002, -1.079495e-002, 3.312633e-002, 1.638197e-002, -9.291845e-003, 1.107931e-002, 3.443463e-002, 7.833524e-003, -1.520317e-002, 1.569854e-002, 1.900972e-002, 2.077781e-002, 4.853235e-002, 5.773214e-002, 2.211778e-002, -9.416022e-003, 9.575404e-003, -2.454004e-002, -1.780106e-002},
{-9.133728e-003, -4.144566e-002, -6.625190e-002, -5.700403e-002, -1.247165e-002, 2.582514e-002, 4.339537e-002, 2.148614e-002, -3.044645e-002, -6.611714e-002, -6.968478e-002, -4.727265e-002, -3.755083e-002, -3.000457e-002, -1.076772e-002, 6.867651e-003, 2.765752e-002, 2.501257e-002, 1.798820e-002, 8.628104e-003, -1.273275e-002, -7.699772e-003, 5.194794e-003, -6.520346e-002, 6.791122e-002, 2.130138e-002, -2.470208e-002, -2.155343e-002, 2.388949e-002, 8.499911e-002, 1.126902e-001, 8.996900e-002, 2.679464e-002, -2.052444e-002, -2.739987e-002, 1.303738e-003, 1.316593e-002, 1.375685e-002, 1.707620e-002, 6.347619e-003, 1.135550e-002, 1.393213e-002, 1.210646e-002, 1.010942e-002, -1.029032e-002, -1.161846e-002, 1.955046e-002, -3.936270e-002, 3.644534e-002, 7.533029e-003, -3.458608e-002, -3.275091e-002, 1.969766e-002, 8.587123e-002, 1.331377e-001, 1.076401e-001, 1.633081e-002, -4.970342e-002, -5.235154e-002, -9.077013e-003, 2.844968e-002, 4.913698e-002, 5.855244e-002, 4.729248e-002, 1.389241e-002, -7.853797e-003, 2.446951e-004, 1.933346e-003, -9.553808e-003, -9.506807e-003, 1.555061e-002, -5.315640e-003, -2.816973e-002, 6.057300e-003, -8.661447e-003, -4.556459e-002, -4.883479e-002, -1.385648e-002, 2.482722e-002, 1.671450e-003, -9.413965e-002, -9.425387e-002, -6.161750e-002, -4.442359e-002, -5.301345e-002, -3.020383e-002, 2.462826e-002, 5.737029e-002, 2.762105e-002, -2.526812e-002, -1.694824e-002, 5.328412e-003, -2.917001e-002, -2.530838e-002, 5.761336e-003, 1.613387e-002, -3.532397e-002, 2.824217e-002, 8.146533e-002, 6.361994e-002, -2.820574e-002, -7.741581e-002, -7.050354e-002, -6.217976e-002, -5.713028e-002, 3.256783e-002, 7.153346e-002, 1.366852e-002, -4.030830e-002, -1.673756e-002, 3.175592e-002, 3.863334e-002, -7.698764e-003, -7.395807e-002, -7.128879e-002, -1.951301e-002, -2.697612e-002, -3.042651e-002, -1.587165e-002, 2.285901e-002, -6.456194e-003, -3.010752e-002, -2.717580e-002, 2.850838e-002, 2.562646e-002, -2.079162e-002, 1.613924e-003, 6.789213e-003, 4.543216e-003, 6.462803e-002, 5.438931e-002, 3.232087e-002, 4.363556e-002, 7.063988e-002, 8.754412e-002, 5.609371e-002, -2.354650e-002, -1.108655e-001, -9.076990e-002, -2.308090e-002, -1.187335e-002, -7.150457e-003, -1.188382e-002, 1.788587e-002, 2.874786e-002, -5.755813e-002, -1.101554e-001, -6.594171e-002, 9.490070e-003, 6.562143e-002, 9.355986e-002, 5.811862e-002, -3.026254e-002, -4.451754e-002, -7.887491e-002, -4.668905e-002, 1.378096e-002, 1.993751e-002, 2.362337e-002, 3.561954e-002, 3.435493e-002, 1.855550e-002, 1.873228e-002, 4.968299e-002, 4.849095e-002, 2.794349e-002, 2.561846e-003, 1.444003e-002, -2.486465e-002, -4.834018e-002, -3.275480e-002, -1.900238e-002, 9.002701e-003, 6.054601e-002, 5.186483e-002, 1.360141e-002, -6.998486e-002, -3.828340e-002, -5.966359e-002, -1.129092e-002, 8.739098e-002, -1.540892e-002, -6.887140e-002, -2.627952e-002, 6.243864e-002, 1.135325e-001, 7.095374e-002, 4.015677e-002, 6.020134e-002, 1.326323e-002, 1.765426e-003, 7.553116e-003, -

© ISO/IEC 2004 — All rights reserved


Copyright International Organization for Standardization
Provided by IHS under license with ISO
No reproduction or networking permitted without license from IHS
Not for Resale

8.038289e-003, -1.819841e-002, 4.380234e-002, 2.082003e-002, 9.916860e-003, 5.245254e-002, 1.258111e-002, 3.137716e-002, 2.594436e-002, 5.391295e-002, -2.165854e-002, -1.079370e-002, 6.327812e-002, 1.228147e-002, -5.925560e-002, 2.418947e-002, 6.500439e-002, 3.658245e-002, -3.377600e-002, -7.340158e-002, -2.666909e-002, -7.504625e-003, -1.211771e-002, -2.225325e-002, -3.357008e-002, -6.175618e-002, -3.864502e-002, -7.884397e-002, -5.234752e-003, -1.663152e-002, -5.860806e-002, 1.685970e-002, 4.599276e-002, 7.360522e-004, -7.501089e-002, -7.250566e-002, -1.004725e-002, 2.694513e-002, 6.076137e-002, 7.255148e-002, 4.349642e-002, 4.037087e-002, 1.826390e-003, -4.088742e-002, -2.573310e-002, 9.091591e-003, -4.160959e-003, -1.184219e-002, -2.157860e-003, -6.143989e-003, -6.033464e-002, -1.357483e-001, 2.857190e-003, -3.635885e-002, -4.509678e-002, 1.330245e-002, 4.920009e-002, -3.228465e-002, -6.152396e-002, -5.383052e-002, -2.842602e-002, 6.363929e-003, 4.216453e-003, -4.456704e-002, -8.352817e-002, -2.092459e-002, 2.841713e-002, 2.898536e-002, 1.672276e-002, 3.443870e-002, 3.392996e-003, -6.571636e-003, 1.087525e-001, 8.062403e-002, -6.239493e-002, -9.647646e-002, -2.779722e-003, -1.798307e-002, -4.933780e-003, 3.435259e-002, 5.247870e-002, -5.149423e-002, -4.485111e-002, 4.660087e-002, 7.601246e-002, 7.537759e-002, 2.396556e-002, -6.065940e-002, -1.235331e-001, -6.825218e-002, 8.450970e-003, 3.760801e-002, 3.671550e-005, 3.202655e-002, -5.853389e-003, -2.085337e-002, 1.409297e-001, 5.630314e-002, -7.189807e-002, -3.547052e-002, -1.061970e-002, 1.971727e-003, 1.935784e-002, 3.636333e-002, 5.230422e-002, -3.582434e-002, -1.003928e-001, 4.830113e-003, 9.402681e-002, 1.281529e-001, 8.662009e-002, -1.153057e-002, -8.896251e-002, -6.454341e-002, -1.173748e-002, 8.068077e-003, -4.703116e-002, 2.588500e-003, -1.125166e-002, -3.231165e-002, 7.855756e-002, 4.773456e-003, -2.658427e-002, -1.795856e-002, -1.821971e-002, -1.370428e-003, -1.188725e-003, 7.688960e-003, 2.756751e-002, 5.902696e-003, -6.694760e-002, -8.561423e-002, -1.807970e-002, 3.267985e-002, 3.009783e-002, -2.957656e-002, -8.476349e-002, -6.010816e-002, -2.227610e-002, -2.579055e-002, -5.427547e-002, 2.178058e-003, -5.953258e-003, -1.043164e-002, 5.938748e-002, 1.539008e-002, 1.264359e-002, -7.475732e-003, -2.265222e-002, -2.746842e-002, -4.069655e-002, -3.280003e-002, -3.964686e-002, -1.850725e-002, 2.788868e-002, -2.016388e-003, -3.518758e-002, -2.563843e-002, -1.289626e-002, -2.824546e-002, -3.645960e-002, -1.347509e-002, -7.843813e-004, -1.047535e-002, -3.068022e-002, 1.335209e-003, 9.654860e-003, 1.572391e-002, 2.617874e-002, 1.030723e-002, 6.109504e-002, 1.018299e-002, 1.807589e-002, -5.638519e-004, -2.030920e-002, -1.450061e-002, -7.286031e-002, -4.106973e-002, 6.183152e-002, 9.985165e-002, 4.449047e-002, 2.464334e-002, 2.770140e-002, 2.922901e-002, 2.911939e-002, 3.003342e-002, 1.371636e-002, 1.306931e-002, 6.397800e-003, 2.382561e-002, 2.077552e-002, 3.044031e-002, -4.939607e-002, 1.147054e-002, 4.858107e-002, 4.890379e-003, 3.682036e-002, 1.856454e-003, -5.318240e-002, -5.918144e-002, -1.095209e-001, -3.825906e-002, 5.826478e-002, 7.856292e-002, 3.267611e-002, 2.180191e-002, 4.468777e-002, 6.798882e-002, 7.900777e-002, 5.851191e-002, 3.477978e-002, 4.089161e-002, 3.591016e-002, 4.137257e-002, 6.936266e-003, 2.626596e-002, -9.247912e-002, -2.299466e-002, 2.680467e-002, 5.157706e-002, 5.888626e-002, 1.787876e-002, -2.768599e-003, -4.531940e-003, -2.414759e-002, 5.017839e-002, 5.281187e-002, -2.401711e-002, -3.898726e-002, -2.883943e-002, 7.573052e-003, 4.755582e-002, 6.245240e-002, 2.959217e-002, 9.359253e-003, 4.648079e-002, 3.919929e-002, 3.471828e-002, -1.716385e-002, 1.179942e-002, -8.134941e-002, -5.052120e-002, 5.700546e-003, 2.933045e-002, 1.042202e-002, 1.956216e-002, 6.333716e-002, 1.856078e-002, -5.922782e-002, -2.395745e-002, 5.137976e-003, -1.078371e-001, -1.117350e-001, -5.666273e-002, -1.606970e-002, 2.432708e-002, 1.837434e-002, -2.557572e-002, -2.915450e-002, 4.606491e-002, 1.565341e-002, 2.060205e-002, -3.778401e-002, -3.920634e-003, -3.800660e-002, -4.470169e-003, 2.996235e-002, 4.523764e-002, 1.030520e-002, -3.541071e-002, 5.689167e-003, -2.026661e-003, 1.677371e-004, 3.518328e-002, 2.178494e-002, -6.038150e-002, -8.689733e-002, -4.700134e-002, 9.189473e-003, 3.141863e-002, -1.354241e-002, -6.475137e-002, -4.486534e-002, 3.160004e-002, -2.408977e-002, -3.833378e-003, -1.966220e-002, -1.164449e-002, -1.758672e-003, 1.679328e-002, 1.947351e-002, 1.379729e-002, -1.595804e-002, -3.881325e-002, 1.602682e-003, 1.160107e-002, 3.357980e-002, 4.981059e-002, 5.374219e-002, 2.839494e-002, -1.093839e-002, -3.220337e-003, 5.375763e-002, 5.249709e-002, -2.963173e-002, -7.782040e-002, -3.292740e-002, 1.862228e-002, -4.095752e-002, -5.647360e-003, -4.070831e-003, -4.460436e-002},
{7.315976e-002, 1.958252e-002, -2.174599e-002, -1.236702e-002, 3.280342e-002, 5.209157e-002, 4.483385e-002, 1.205842e-002, -1.260775e-002, -1.144322e-002, 1.624331e-002, 2.464787e-002, -1.385640e-002, -6.025282e-002, -7.958047e-002, -5.866890e-002, 1.424392e-002, 9.546881e-002, 1.094434e-001, 7.331538e-002, -6.434374e-003, -1.950962e-002, -3.518430e-002, -8.146616e-002, 8.828481e-002, 2.428536e-003, -7.663032e-002, -8.343594e-002, -1.890710e-002, 3.828699e-002, 4.535023e-002, 5.840699e-003, -1.340963e-002, -9.474588e-003, 1.898358e-002, 3.065754e-002, 7.635972e-003, -4.928275e-002, -8.776175e-002, -8.165887e-002, -2.328954e-002, 4.447422e-002, 5.261696e-002, 4.859850e-002, 9.711131e-003, 8.191181e-003, 2.159148e-003, -4.130850e-002, 1.572515e-001, 4.022528e-002, -9.017814e-002, -1.316093e-001, -4.638151e-002, 4.789758e-002, 5.861706e-002, -4.346346e-003, -7.100773e-004, 4.313411e-002, 5.737929e-002, 3.643690e-002, -9.756399e-003, -5.119986e-002, -6.722604e-002, -4.704881e-002, 5.783495e-003, 3.423522e-002, -4.729211e-003, -1.911389e-002, -1.222104e-002, 8.414482e-003, 3.743991e-002, 5.222168e-003,


© ISO/IEC 2004 — All rights reserved

Copyright International Organization for Standardization
Provided by IHS under license with ISO
No reproduction or networking permitted without license from IHS
Not for Resale

1.293005e-001, 5.961435e-002, -6.665542e-002, -1.453659e-001, -5.957694e-002, 5.745409e-002, 5.063082e-002, -5.011135e-002, -2.698114e-002, 6.622319e-002, 9.708412e-002, 7.772767e-002, 2.273282e-002, -2.273119e-002, -3.598180e-002, -2.716584e-002, 1.516565e-002, 1.698040e-002, -2.560156e-002, -6.533251e-002, -4.876538e-002, -2.250578e-002, 3.054794e-002, 2.540754e-002, 4.252131e-002, 5.074349e-002, -3.308677e-003, -9.560737e-002, -5.192497e-002, 4.819757e-002, 1.867978e-002, -1.044210e-001, -8.935329e-002, 1.650642e-002, 4.799669e-002, 1.462136e-002, -2.160231e-002, -4.178294e-002, -1.952093e-002, 1.507406e-002, 4.989043e-002, 3.012522e-002, -5.653820e-002, -5.577719e-002, -1.442849e-002, -4.436988e-002, 1.859729e-003, 9.943403e-003, -1.431194e-001, -7.492908e-002, 1.316526e-002, 1.346574e-002, 1.373982e-002, 8.638657e-002, 4.358690e-002, -8.090834e-002, -5.615554e-002, -4.126611e-003, -6.723293e-002, -1.073366e-001, -7.042392e-002, -3.205814e-002, 2.903881e-002, 8.853940e-002, 1.172996e-001, 1.159418e-001, 2.925226e-003, -3.012061e-002, 3.739534e-002, -2.929317e-002, -1.805034e-002, -1.754977e-002, -6.967178e-002, -9.919636e-002, -3.412251e-003, 8.000084e-002, 4.103572e-004, 3.737978e-002, 4.335607e-002, -3.080968e-002, 4.972679e-002, -8.677474e-004, -9.762825e-002, -4.474006e-002, 1.356157e-002, 2.668709e-002, 3.368305e-002, 6.320845e-002, 3.433305e-002, 5.318369e-002, 1.159061e-002, 1.067710e-002, 4.709145e-002, -1.332646e-002, 1.383492e-002, -1.153105e-002, 7.271001e-002, 9.049516e-002, 5.759176e-002, 5.673774e-002, -6.109461e-002, -2.862915e-002, -5.412587e-003, -1.425003e-002, 9.651891e-002, 2.553674e-002, 2.349126e-003, 9.641340e-002, 4.815812e-003, -5.039591e-003, 1.336661e-002, -4.356034e-002, -1.137781e-001, -5.339375e-002, -4.380697e-002, -4.430393e-002, -6.826863e-003, 2.528720e-002, 6.354069e-002, 2.597764e-002, -1.261732e-001, 5.815466e-002, 4.284993e-002, 2.229101e-002, -1.782996e-002, 2.099655e-002, 2.555226e-002, -3.134119e-003, 9.352360e-002, 5.139341e-003, 1.856580e-002, -3.992256e-002, -1.450878e-001, 1.774170e-003, 1.188150e-001, -8.348597e-002, -1.022692e-001, 3.706449e-002, 3.669230e-002, 6.029837e-005, -2.195891e-002, -8.923162e-003, -3.182871e-003, 2.040402e-002, -2.182342e-002, 1.099570e-003, -5.250898e-002, -4.208501e-003, 1.295258e-002, -4.005220e-002, -3.563953e-002, -3.404902e-002, 3.052163e-002, -2.137773e-004, -2.963532e-002, -6.106606e-003, -4.429404e-002, -4.754256e-002, -1.606799e-002, -6.365445e-002, -4.278055e-002, 1.742506e-002, 1.941024e-002, 2.934711e-002, 1.583977e-002, -1.006112e-002, -3.108723e-002, 1.026267e-002, 3.825330e-002, -4.237498e-002, -9.323092e-002, -1.746430e-002, 7.194746e-003, -6.174062e-002, -4.490972e-002, -2.552818e-002, 2.326309e-003, 1.152414e-002, -8.752185e-003, 3.956179e-002, 5.728834e-002, 4.293710e-002, 2.575626e-002, 4.611763e-003, -1.320308e-002, -1.254402e-002, -3.382858e-002, 9.040545e-003, 2.299169e-002, 7.261002e-004, -4.005524e-002, -2.534485e-003, 1.552762e-002, -4.398368e-002, -3.038803e-002, 2.374628e-002, -7.787501e-005, -4.143242e-002, -2.468540e-002, 6.472156e-003, 7.148565e-005, 9.619046e-004, -1.487574e-002, 1.348648e-002, 5.956723e-002, 7.260447e-002, 6.102403e-002, 3.437076e-002, 1.069233e-002, -7.522934e-003, -5.121909e-002, -2.543195e-002, 1.086580e-002, 2.000144e-002, -2.779243e-002, -3.352363e-002, 8.428291e-004, 1.140380e-002, 5.576533e-002, 4.286002e-002, 2.326836e-003, -1.580337e-002, -1.003297e-002, 3.670722e-002, 1.989241e-002, -5.267091e-003, -1.105923e-002, -2.420751e-002, -8.121115e-003, 2.061881e-002, 2.615743e-002, 1.005100e-002, -3.111337e-003, -2.327207e-002, -4.914611e-002, -4.124476e-002, 4.684750e-004, 2.103902e-002, 2.146437e-003, -3.250821e-002, 3.141987e-002, 6.921218e-002, 5.566928e-002, 1.728693e-002, 2.245571e-003, -7.340108e-003, -1.214069e-002, 3.422858e-002, 3.869784e-002, -5.846588e-002, -9.505186e-003, -9.683491e-003, -4.017078e-002, -5.656227e-002, -5.327703e-002, -5.589609e-002, -5.249280e-002, -4.448654e-002, -4.898637e-002, -3.427546e-002, -5.651933e-003, 1.103164e-003, 2.304365e-002, 4.384239e-003, 1.897365e-004, 1.736599e-002, -3.703661e-003, -2.117091e-002, -2.378713e-002, -2.157374e-002, -2.287232e-002, -1.008205e-002, 4.627912e-002, -5.292227e-002, -9.923475e-002, 1.985750e-002, 1.072931e-002, -3.063411e-002, -5.250157e-002, -4.799491e-002, -3.607960e-002, -1.168559e-002, -6.622179e-007, 2.157088e-003, -1.575381e-002, -1.622753e-002, 9.631863e-003, 2.483873e-002, -2.723095e-002, 1.099051e-002, 7.778372e-003, 1.169377e-002, -1.661767e-003, 1.679058e-002, 3.275847e-002, -3.994527e-002, 1.053975e-002, 7.777753e-002, -8.158387e-002, -5.351830e-003, 5.109071e-002, 2.563147e-002, -2.481732e-003, -8.674421e-003, 1.075469e-002, 3.429530e-002, 2.994905e-002, 5.750509e-003, -2.393103e-002, -2.459241e-002, -9.282416e-003, 2.458614e-002, -9.530089e-003, 4.247091e-002, -3.340489e-003, 2.029090e-002, -1.723040e-002, 7.342129e-003, 8.440013e-002, -2.978414e-003, -6.377744e-002, 1.026479e-001, 4.017322e-002, -3.573021e-004, 4.906702e-002, 4.497706e-002, 2.902438e-002, 2.167534e-002, 4.298856e-002, 5.861269e-002, 3.720121e-002, 1.137744e-002, -1.684599e-002, -2.345118e-002, -3.895462e-002, 1.495256e-002, 4.037251e-002, 2.538089e-002, -4.800178e-002, -1.166710e-002, -5.263459e-002, -5.791857e-002, 1.697770e-002, 2.623829e-002, -5.736089e-003, 2.449895e-002, 2.662189e-002, 1.850557e-002, 4.258713e-002, 5.111652e-002, 3.421846e-002, 2.960410e-002, 4.729031e-002, 5.706267e-002, 3.896776e-002, 1.511493e-002, -7.097781e-003, -1.412682e-002, -4.942030e-002, 5.067499e-004, 5.302045e-002, 1.901291e-002, -2.974677e-002, -2.033298e-002, -8.622913e-003, 3.697691e-002, 9.820086e-003, -5.791286e-002, -8.274267e-003, -3.604624e-003, -3.520163e-004, 2.957804e-002, 2.683237e-002, 1.899757e-002, 6.633043e-003, 5.402101e-003, 2.553191e-002, 3.728526e-002, 3.118007e-002, 1.858254e-002, 8.086641e-003, 1.795394e-002, -1.671321e-002, 1.213618e-002, -

© ISO/IEC 2004 — All rights reserved


Copyright International Organization for Standardization
Provided by IHS under license with ISO
No reproduction or networking permitted without license from IHS
Not for Resale

5.757922e-003, -3.332597e-003, 7.515227e-003, -3.886295e-002, -3.205920e-002, 3.669153e-002, 3.088833e-003, -4.916493e-002, -2.406248e-002, 8.953663e-003, 1.043383e-002, 4.770143e-003, -7.567075e-003, -3.311176e-002, -4.521622e-002, -3.049746e-002, 3.525814e-003, 1.880785e-002, 1.829923e-002, 1.594888e-002, 1.955961e-002, 3.078458e-002, 2.890546e-002, 3.000719e-002, -7.588946e-002, -4.960436e-002, -1.944704e-002, -8.716086e-003, 5.342844e-003, 2.683343e-002, 2.128565e-002, 5.411500e-002, 1.039964e-001, 7.588206e-002, 2.028922e-002, -3.000504e-002, -5.662227e-002, -8.119207e-002, -9.659529e-002, -6.347634e-002, -1.989593e-002, -1.876741e-003, -2.671360e-004, 5.325199e-003, 1.707153e-002, 2.233057e-002, -7.386652e-003, -3.907224e-002},
{-2.272868e-002, 1.558609e-002, 4.429297e-002, 3.770036e-002, 1.105761e-002, -2.474380e-003, -1.285589e-002, 1.868699e-003, 2.356001e-002, 2.185663e-002, -1.357487e-002, -6.432840e-002, -5.922157e-002, -1.575427e-002, 4.507129e-002, 7.456451e-002, 5.557032e-002, 5.154842e-003, 6.477652e-003, -2.275312e-002, -7.809422e-002, -1.447238e-002, 2.215321e-002, -4.525583e-002, -4.821647e-002, 1.237281e-002, 6.372441e-002, 5.805493e-002, 1.699467e-002, -1.970548e-002, -3.755977e-002, -2.019624e-002, 1.816213e-002, 3.380544e-002, 1.698500e-002, -5.072509e-002, -8.222171e-002, -6.817019e-002, -1.707682e-002, 3.279581e-002, 3.390218e-002, -1.262556e-002, -1.716968e-003, 3.103766e-002, -3.585438e-002, -1.054302e-002, 3.042578e-002, -2.150893e-002, -4.730966e-002, 3.472040e-004, 5.093444e-002, 5.140433e-002, -6.412521e-003, -5.122019e-002, -6.649214e-002, -3.650590e-002, 1.948919e-002, 6.457625e-002, 7.686261e-002, 3.828244e-002, -5.595954e-003, -4.300834e-002, -4.462695e-002, -1.321822e-002, -8.023974e-003, -3.346769e-002, -2.616720e-002, 6.202431e-002, 1.367056e-002, 5.922093e-003, 1.516887e-002, -7.513236e-003, -1.125812e-003, 6.453528e-003, 2.740385e-002, 3.246617e-002, -7.171550e-003, -4.747358e-002, -6.471049e-002, -2.287981e-002, 3.546002e-002, 5.485292e-002, 6.567064e-002, 5.769256e-002, 4.145021e-002, 1.270648e-002, -2.919838e-002, -4.430816e-002, -3.534360e-002, -2.888647e-002, -4.455836e-002, 2.735646e-002, 3.763240e-002, 4.313688e-003, -1.491259e-002, -8.283273e-003, -1.087494e-002, 4.903145e-003, -1.337923e-002, -9.834324e-003, 3.715924e-002, 4.669239e-002, 3.967274e-002, 6.984543e-002, 4.962418e-002, -6.119399e-002, -1.094526e-001, -5.053443e-002, 2.311824e-002, 3.768089e-002, 1.371585e-002, 2.170536e-003, 4.505938e-003, 6.460070e-003, -1.428429e-002, 9.700323e-003, -6.084108e-004, -2.867756e-002, -3.367673e-002, -1.146516e-002, -1.155924e-002, 9.289834e-003, -9.184365e-003, -5.331702e-002, -9.172821e-003, 3.058223e-002, 4.027746e-002, 9.137440e-002, 3.727263e-002, -1.101503e-001, -3.847311e-002, 8.477561e-002, 9.063795e-002, 2.383455e-002, -2.990964e-002, -1.381681e-002, 5.315463e-002, 5.616885e-002, 1.132764e-002, 2.863294e-003, -3.230435e-002, -5.260569e-002, -2.313769e-002, 2.503364e-002, -6.240650e-002, -5.150872e-002, -3.171061e-002, -7.259840e-002, -4.659321e-002, -7.769709e-002, -1.013451e-001, -1.697250e-002, 5.946686e-004, -5.748672e-002, 3.900526e-002, 1.272714e-001, 1.109221e-001, 6.050594e-003, -5.537872e-002, -5.469438e-002, 1.732452e-002, 7.422364e-002, 4.649028e-002, 2.674440e-002, 6.823017e-003, 9.614374e-003, 5.374151e-002, 8.098954e-002, 1.117055e-002, -9.915696e-002, -9.896625e-002, -8.730224e-002, -1.711025e-002, 4.526867e-003, -2.523364e-002, -5.415365e-002, -4.842328e-002, -1.326040e-001, -1.726758e-001, -6.860088e-002, 2.973720e-002, -2.651747e-002, 2.417320e-002, 5.926593e-002, 1.688016e-002, -6.039285e-003, -3.652166e-003, 1.322980e-002, 2.115206e-002, 4.848286e-002, 9.140606e-002, 6.620913e-002, 1.461862e-001, 3.200332e-002, 1.153993e-002, -6.329817e-003, -4.200715e-002, 5.247389e-002, 5.995391e-002, -4.315618e-002, -9.073398e-002, -2.531565e-002, -9.768949e-002, 1.419439e-002, 5.485393e-002, -1.802206e-002, -1.519028e-003, -5.320240e-002, -1.153552e-002, 1.637788e-002, -1.679802e-003, -1.561183e-002, -2.634312e-002, -1.422843e-002, -2.640946e-002, -6.565945e-002, 1.107990e-002, 6.235740e-002, 1.330425e-001, 4.187488e-002, -5.258546e-002, 5.398040e-002, 5.423804e-002, -2.045940e-002, -7.566714e-002, 8.870083e-002, 5.049766e-002, 2.028170e-002, 2.391078e-002, -8.358698e-003, -3.659678e-002, -1.969158e-002, 2.155043e-002, 3.734659e-002, 5.093560e-002, 2.594798e-002, 8.901890e-003, 1.625464e-002, -2.611069e-002, -8.365443e-002, -5.905262e-002, 2.860992e-002, 1.431070e-001, 5.520582e-002, -4.881546e-002, 1.134438e-002, 2.263976e-003, -1.781677e-002, -6.580089e-002, 6.745119e-002, 8.197047e-002, 1.486551e-002, 9.760273e-003, 5.697393e-003, 1.899970e-002, 4.683564e-002, 4.325043e-002, -1.329896e-002, -3.802293e-002, -3.300678e-002, -1.603529e-002, 7.539922e-003, 4.114154e-003, -2.508299e-002, -1.293238e-001, -2.298197e-002, 9.807875e-002, 6.648568e-003, -4.282531e-002, -2.020267e-002, -3.292431e-002, -3.495955e-002, -2.834690e-002, 3.415330e-002, 7.568891e-002, -1.658012e-002, -2.147712e-002, -7.305211e-003, 1.393288e-002, 3.912710e-002, 1.159164e-002, -6.413350e-002, -9.004228e-002, -3.439139e-002, -2.562754e-003, -1.274458e-002, 1.672896e-002, 3.554840e-004, -1.414329e-001, -2.773094e-004, 6.133762e-002, -1.611952e-002, -3.650785e-002, -2.156205e-002, -3.516376e-002, -3.741679e-002, 1.887711e-002, 2.626535e-002, 4.575889e-002, -7.554489e-003, -3.717572e-002, -3.216944e-002, -1.300229e-002, 7.382083e-003, -1.363460e-002, -6.868162e-002, -7.589074e-002, -6.319857e-003, 8.723493e-003, -2.273183e-002, 5.998153e-003, -1.569333e-002, -9.289925e-002, 2.238438e-002, 3.069751e-002, 8.157534e-003, -1.100712e-002, 2.926502e-003, -6.709338e-003, -1.735201e-002, 3.597923e-002, 7.877877e-002, 2.155622e-002, -3.365055e-002, -2.694701e-002, -7.954486e-003, 7.247806e-003, 3.144632e-002, 2.523591e-002, -2.757741e-002, -2.167333e-002, 3.468373e-003, -2.895353e-003, -1.311844e-002, -1.876738e-002, -3.245723e-002, -


© ISO/IEC 2004 — All rights reserved

Copyright International Organization for Standardization
Provided by IHS under license with ISO
No reproduction or networking permitted without license from IHS
Not for Resale

2.007925e-002, 3.595894e-002, 4.253399e-002, 2.799545e-002, 1.794805e-002, 2.027988e-002, 8.509053e-003, 1.192996e-002, 5.846739e-003, 6.531384e-002, 9.006359e-002, 1.619154e-003, -2.214347e-002, -3.874811e-003, 2.947236e-002, 5.759127e-002, 5.842167e-002, 2.884240e-002, -7.643832e-004, 8.660012e-004, -8.349643e-003, 7.465654e-003, -1.348121e-002, -2.242540e-002, 1.302592e-002, 6.343765e-002, 7.900754e-003, 4.386548e-003, 2.157534e-003, 8.501526e-003, -1.348108e-002, 1.716226e-002, -2.499686e-002, -4.274327e-002, 4.812212e-002, 2.313331e-002, 1.514088e-002, 4.294346e-002, 8.341141e-002, 9.943540e-002, 7.064838e-002, 2.019301e-002, -2.574951e-002, -2.148491e-002, -1.464557e-002, 2.422570e-002, -1.157239e-002, 1.578997e-002, 4.759061e-002, 4.475178e-002, -2.048565e-002, -3.454487e-002, 3.765050e-003, 1.258886e-002, -1.031662e-002, 3.606360e-002, 5.104011e-002, -4.154456e-002, -3.634849e-003, 3.916889e-003, -3.511121e-002, -4.842066e-002, -4.491628e-002, -3.976132e-002, -5.634653e-002, -7.213209e-002, -6.757387e-002, -3.181015e-002, -1.264623e-002, 2.198829e-002, 2.161733e-003, 4.812775e-002, 3.859897e-002, 1.792436e-003, -4.700288e-002, -8.289803e-002, -6.149719e-003, 5.333106e-002, 5.219426e-003, -1.036929e-002, 2.393915e-002, -4.002531e-003, 4.503926e-003, 2.720954e-002, -2.193036e-002, -6.934517e-002, -9.379421e-002, -9.181926e-002, -8.845343e-002, -6.986611e-002, -4.437122e-002, -1.409584e-002, 1.576206e-003, 2.077405e-002, 1.285769e-004, 3.527704e-002, -9.081762e-003, -6.207924e-003, 3.391426e-002, 5.012933e-002, 2.064552e-002, 6.279759e-003, -1.828851e-002, -4.385950e-003, -1.519154e-002, 6.499906e-003, 9.086676e-003, 9.577642e-003, -1.031430e-002, -3.041289e-002, -3.857243e-002, -3.583509e-002, -2.263400e-002, -1.749967e-003, 9.286257e-003, 1.615289e-002, 1.876843e-002, 7.903005e-003, 3.926469e-003, 2.019553e-002, -5.055823e-002, -1.048615e-002, 2.600267e-002, 2.748965e-002, 2.760116e-002, 3.132029e-002, 7.834875e-003, -1.454712e-002, -1.801460e-002, 1.386681e-002, 1.948995e-002, -2.329127e-002, -5.377707e-002, -4.164384e-002, 7.055923e-003, 4.105847e-002, 5.884030e-002, 6.886330e-002, 5.234018e-002, 3.663181e-002, 2.027845e-002, -6.280010e-003, 4.174222e-003, 1.196738e-002, -6.447046e-002, -4.782723e-002, -3.347694e-002, -3.441192e-002, 7.445289e-003, 5.960475e-002, 5.321463e-002, 1.230848e-002, -9.911890e-003, 1.284136e-002, 1.578340e-002, -2.882392e-002, -7.300037e-002, -6.550047e-002, 9.585955e-004, 7.985999e-002, 1.193929e-001, 1.118251e-001, 7.534148e-002, 4.122558e-002, 1.423148e-002, -3.361337e-002, -4.680166e-002, -1.944054e-002},
{5.335529e-002, 5.547373e-002, 1.861682e-002, -4.838409e-002, -1.138139e-001, -1.406330e-001, -1.145683e-001, -4.644094e-002, 5.911157e-002, 1.007761e-001, 6.599491e-002, -1.172721e-002, -5.268943e-002, -5.962101e-002, -1.639765e-002, 1.292803e-002, 2.115920e-002, 1.069354e-003, -3.303614e-002, -5.955220e-002, -7.876319e-002, 4.231297e-003, 9.801633e-003, -4.146777e-002, -2.941035e-002, 1.733026e-002, 4.494993e-002, 3.255441e-002, -2.301170e-002, -6.494543e-002, -5.190056e-002, 7.252890e-003, 1.122244e-001, 1.390231e-001, 7.713901e-002, -3.479199e-002, -1.026268e-001, -9.679426e-002, -3.035722e-002, 3.930832e-002, 6.942009e-002, 6.428543e-002, 3.559268e-002, 3.099257e-002, -3.062074e-002, 3.559581e-002, 3.009106e-002, -2.881488e-002, -7.447816e-002, -6.070525e-002, 5.685310e-003, 5.999218e-002, 5.295988e-002, 1.340068e-002, -1.035033e-002, 2.045351e-002, 9.004797e-002, 7.193392e-002, 1.588606e-002, -3.619905e-002, -4.384275e-002, -2.478656e-002, 1.366809e-002, 3.625087e-002, 4.092237e-002, 2.871111e-002, 3.002604e-002, 6.820647e-002, 1.163031e-002, 4.327422e-002, 3.480759e-002, -1.603998e-002, 8.396190e-002, 1.262309e-002, -1.520019e-002, 7.054511e-003, 4.072378e-002, 3.097971e-002, -1.142773e-002, -3.486238e-002, -2.679303e-002, -5.941251e-002, -4.596318e-002, 7.702649e-004, 2.054626e-002, 8.625449e-003, 9.464886e-003, 2.441134e-002, 2.816229e-002, -3.480481e-002, -5.120541e-002, 1.617474e-002, 1.167144e-002, 2.209610e-002, 2.882136e-002, 6.970944e-003, 4.495041e-002, -2.079840e-002, -8.574164e-002, -9.745079e-002, -1.190474e-002, 7.146911e-002, 5.138097e-002, -1.361958e-002, -5.828721e-002, -5.960606e-002, 2.818406e-003, 4.068675e-002, 2.994052e-002, 4.390247e-003, -1.928122e-002, 7.100177e-003, 2.734790e-002, 4.761353e-004, -2.145878e-002, 8.702142e-003, -1.158259e-002, -2.500215e-002, 3.086905e-003, 9.987338e-003, -6.071031e-003, -9.655771e-004, -5.627726e-002, -1.374323e-001, -6.902419e-002, 7.732827e-002, 7.650662e-002, -7.760990e-003, -6.488154e-002, -4.665062e-002, 1.413585e-002, 5.356909e-002, 3.681811e-002, -5.691015e-003, -3.286132e-002, -3.510147e-002, -3.106344e-002, -7.718884e-003, 3.852811e-003, 2.552561e-002, -1.339912e-003, -6.181226e-002, -2.500499e-002, -1.423330e-003, -5.010630e-002, -7.553230e-003, 6.687920e-002, 4.872835e-003, -4.980755e-002, 1.167553e-002, 5.490112e-003, -1.110333e-003, 7.388075e-005, -3.712077e-002, 1.952223e-002, 6.467893e-002, 6.175116e-002, 2.506858e-002, 1.174317e-002, 3.521369e-003, 6.876476e-003, -7.019486e-003, -3.371983e-002, -2.975117e-002, -3.117754e-002, -6.577144e-002, -4.433195e-002, -2.820714e-002, 7.923754e-003, -1.085521e-001, -2.829735e-003, 5.593592e-002, -9.063399e-003, -2.471639e-002, -3.134036e-002, 5.713656e-002, 1.367102e-001, -4.232414e-002, -3.744845e-002, -1.915677e-002, -1.496850e-002, -9.994457e-003, 3.912353e-002, 7.907305e-003, -3.177667e-002, -3.591046e-002, -5.784559e-002, -1.531232e-002, 4.005068e-002, 4.104766e-002, -8.648194e-003, -5.598211e-002, 5.999889e-002, -1.002778e-001, -5.746661e-002, 1.870058e-002, 3.670642e-002, -3.203415e-003, -1.011875e-002, 3.675320e-002, 8.718393e-002, -2.645879e-002, -5.024752e-002, 2.517077e-002, -1.443035e-003, -1.325181e-001, -6.510163e-002, 1.091866e-001, 1.457591e-001, 8.675097e-002, -1.580180e-002, 5.243001e-004, 7.768230e-002, 1.128747e-001, 4.665750e-002, 2.358781e-002, -

© ISO/IEC 2004 — All rights reserved


--`,,```,,,,````-`-`,,`,,`,`,,`---

Copyright International Organization for Standardization
Provided by IHS under license with ISO
No reproduction or networking permitted without license from IHS
Not for Resale

2.127055e-002, -5.614041e-002, -4.160703e-002, 3.681177e-002, 5.449091e-002, -5.272648e-003, 5.309958e-005, 3.541733e-003, -2.395950e-003, 2.360909e-003, 6.278599e-003, 5.702628e-002, 6.962647e-002, 1.266593e-002, -1.565164e-002, -1.495305e-002, -4.332083e-002, 1.608480e-003, 2.996781e-002, 3.639174e-002, 7.613466e-003, 2.802810e-002, -8.732955e-004, 7.041218e-002, 5.190861e-002, 1.995017e-002, -1.789637e-002, 2.110910e-002, 4.484713e-003, -2.564518e-002, -9.731110e-003, -3.691419e-003, -4.414367e-002, -4.054087e-002, -7.297240e-003, 4.666526e-002, 5.780632e-002, 9.960328e-003, -7.386567e-002, -1.306355e-001, -1.527579e-001, -1.052094e-001, 1.302446e-003, 6.274492e-002, -1.050266e-002, 1.214098e-002, -1.250265e-002, 6.287965e-002, 8.292369e-002, -2.049427e-003, -4.860438e-002, 3.214821e-002, -3.612739e-002, -1.947990e-002, -2.088793e-003, -1.620630e-003, -2.558460e-002, -7.488186e-002, -9.012635e-002, -6.075355e-003, 5.870524e-002, 7.347116e-002, 4.208423e-002, 4.412260e-003, -2.202718e-002, -3.858695e-002, 4.021220e-003, 2.113271e-002, -3.417945e-002, 4.898769e-003, -3.197481e-002, 4.535782e-004, 2.022494e-003, -7.633902e-002, 4.231874e-003, 4.132891e-002, -3.894070e-002, -2.174443e-003, 2.418648e-002, -7.250079e-004, -1.184305e-002, -5.558342e-003, -5.927413e-002, -9.004667e-002, -1.107665e-002, 6.325331e-002, 9.735330e-002, 1.044051e-001, 7.919738e-002, 2.479803e-002, -1.406264e-003, -2.033999e-002, -3.620480e-002, -1.686540e-003, -3.610235e-002, -3.704968e-002, -6.854499e-002, -2.425816e-002, 9.656903e-002, 1.608199e-002, -3.141637e-002, -7.877092e-003, 3.568371e-002, 1.158007e-002, -4.720872e-002, 3.155917e-002, 6.634498e-002, -2.417731e-002, -7.210549e-002, -2.756810e-002, 2.258587e-002, 6.140030e-002, 6.263578e-002, 1.821408e-002, -2.834132e-002, -3.629992e-002, -1.442525e-002, -1.176287e-002, -1.434721e-002, -5.731462e-003, -5.417466e-002, 3.139410e-002, 6.832443e-002, -1.645713e-002, -2.993172e-002, 5.441072e-004, 4.858283e-002, 2.318359e-002, -7.566158e-002, -5.490891e-003, 7.425181e-002, 4.198408e-002, -1.483254e-002, -1.661281e-002, 6.043062e-003, 3.616494e-002, 4.545174e-002, 9.085574e-003, -2.388552e-002, -9.118293e-003, -1.261866e-002, -2.773163e-002, 7.292217e-004, 1.100647e-002, -6.936465e-002, -5.974422e-003, 3.864318e-002, 2.398987e-002, 3.197168e-002, -3.477871e-003, 2.026574e-002, 2.685711e-002, -2.454650e-002, 2.183701e-002, 4.270651e-002, -8.912342e-003, -3.245183e-002, -3.056454e-002, -2.497379e-002, -1.835274e-003, 4.250374e-003, -1.949164e-002, -8.890183e-003, 1.520693e-002, -8.967920e-003, -3.557267e-002, 1.523224e-002, -3.657934e-002, -5.373442e-002, -2.517370e-002, -2.299102e-003, 5.456825e-002, 3.676474e-002, -6.690279e-002, -5.701646e-002, -3.724024e-003, 4.011172e-003, 5.101895e-002, 5.816919e-002, -5.686040e-002, -4.702728e-002, -1.594559e-002, -1.231377e-002, -7.864370e-003, -2.282934e-003, -4.240326e-003, 1.750586e-002, 3.043796e-002, -1.238904e-002, -4.103518e-002, 4.775844e-003, -7.403213e-002, 4.681095e-002, 2.366714e-002, -3.279694e-002, -3.695712e-003, 5.618732e-003, -3.283048e-002, -9.656079e-003, 4.591951e-002, -7.013300e-003, -5.906355e-002, 2.309969e-002, -4.367006e-002, -4.518605e-002, 1.050924e-002, 3.052966e-002, 2.879966e-002, 2.005030e-002, 9.821525e-003, 3.290006e-002, 3.351757e-002, -3.445292e-003, -2.684250e-002, 1.903047e-002, -3.915250e-002, 1.071707e-001, 7.458972e-002, -1.253606e-002, -3.780536e-002, -2.106076e-002, -2.696074e-002, -3.489450e-002, 2.515734e-002, 5.720969e-002, 1.228329e-002, 4.352050e-002, 6.885432e-003, -2.299834e-002, -1.693452e-003, 2.721342e-002, 2.275670e-002, -4.407955e-003, -8.173788e-003, 1.468917e-002, 1.351322e-002, 1.081782e-002, 3.048714e-002, 3.299460e-002, 1.907954e-002, 5.268331e-002, 2.031861e-002, -9.162765e-003, -2.743436e-002, -5.261776e-002, -6.489627e-002, -2.815045e-002, 1.963328e-002, 2.021486e-002, -1.230119e-002, 1.320580e-003, 3.002802e-002, 1.578871e-002, -5.273111e-003, 4.044792e-004, 2.527174e-004, -3.183925e-002, -3.253829e-002, -2.410120e-002, -1.764630e-002, 4.003135e-002, 4.031911e-002, 5.985457e-003, 2.297478e-002, -3.196027e-002, -2.698731e-002, 5.765035e-003, 3.402373e-002, 2.882620e-002, 2.675940e-002, 6.082568e-002, 5.766424e-002, 2.536388e-002, -3.063010e-002, -5.424119e-002, -2.587979e-002, 1.989939e-002, 1.552009e-002, -1.753407e-002, -3.821203e-002, -5.738353e-002, -5.586608e-002, -5.467806e-002, -2.533009e-002, 4.768363e-002, -4.179747e-003, -3.048078e-002, 4.897019e-002},
{-8.923469e-002, -6.107554e-002, -3.143913e-002, -2.808803e-002, -3.705740e-002, -4.138164e-002, -2.262217e-002, -1.644670e-002, -3.192950e-002, -3.613922e-002, -1.848120e-002, -9.570165e-003, -2.251940e-002, -4.139731e-002, -5.735399e-002, -5.764018e-002, -5.842848e-003, 5.702024e-002, 6.196279e-002, 5.150450e-002, 3.361362e-002, 1.668884e-003, 5.766715e-002, 8.197539e-002, -3.381635e-002, 2.278438e-003, 2.811762e-002, 2.755024e-002, 1.469142e-002, 1.586572e-002, 3.869526e-002, 5.411215e-002, 3.281894e-002, 2.135786e-002, 3.796811e-002, 4.138265e-002, 1.378704e-002, -1.269233e-002, -2.106465e-002, -1.110060e-002, 1.599462e-002, 5.991859e-002, 4.253352e-002, 2.715460e-002, 3.095779e-002, -1.581298e-002, 3.027652e-002, 4.145380e-002, 4.429119e-002, 5.662164e-002, 5.671261e-002, 3.398364e-002, 2.264070e-002, 3.453811e-002, 6.656369e-002, 7.203411e-002, 4.348428e-002, 1.518836e-002, -1.530438e-003, -2.499588e-002, -5.051556e-002, -5.607042e-002, -2.227662e-002, 3.215753e-002, 5.866711e-002, 3.687181e-002, -1.239551e-002, -2.074425e-002, 1.849505e-002, -3.401866e-002, -1.345304e-002, -3.745366e-002, -2.709427e-002, 4.631402e-003, 1.965534e-002, -2.220811e-002, -5.086414e-002, -4.645810e-002, 3.455001e-003, 2.565737e-002, -9.794754e-003, -2.964526e-002, -5.452972e-004, 7.319269e-003, 5.118771e-003, 1.321468e-002, 1.379693e-003, 1.366095e-002, 2.439579e-002, 2.138155e-002, -8.017155e-002, -9.587570e-002, 4.510270e-003, -3.060751e-002, -2.651504e-002, -8.129533e-002, -


© ISO/IEC 2004 — All rights reserved

Copyright International Organization for Standardization
Provided by IHS under license with ISO
No reproduction or networking permitted without license from IHS
Not for Resale

4.867651e-002, -2.584169e-002, -4.551988e-003, -1.943608e-002, -4.278241e-002, -2.057754e-002, 2.664643e-002, 4.376197e-002, -6.245351e-003, -2.295571e-002, -1.580625e-002, -3.201028e-003, 2.893309e-002, 4.856799e-002, 4.449835e-002, 2.591141e-002, 3.093756e-003, 3.594935e-002, 1.242990e-002, -7.639003e-002, -6.262543e-004, -1.063753e-002, 4.959130e-003, -6.019799e-002, 2.467622e-002, 8.047011e-003, -3.440083e-002, -5.243735e-002, -1.760075e-002, 1.929253e-002, 3.611778e-002, 2.839243e-002, -3.239981e-002, -1.000783e-001, -1.058636e-001, -3.937950e-002, -1.006369e-002, 1.459817e-002, 2.694297e-002, 8.778793e-003, -2.621182e-002, -2.015701e-002, 2.076040e-002, 1.068221e-002, 4.659303e-002, 3.334755e-002, 3.905788e-002, -7.929700e-003, -3.717086e-003, 6.591476e-002, 3.262456e-002, -7.861058e-002, 3.714220e-002, 9.280674e-003, -7.057303e-002, -3.210256e-002, -1.342974e-002, -1.292112e-002, 7.057898e-002, 6.507700e-002, -3.811731e-003, -2.760878e-002, 1.996506e-003, -1.368258e-003, -2.978840e-002, -3.112216e-002, 8.683838e-003, 3.445999e-002, 3.807803e-003, 1.416622e-002, 7.024925e-002, 6.585723e-002, 4.363881e-002, 2.841887e-002, 7.709236e-002, -5.408060e-002, 9.440995e-002, 5.958796e-002, 1.143641e-002, 1.984248e-002, 7.722613e-002, 1.042246e-001, 3.970460e-002, 6.472922e-004, 3.981675e-003, -4.339298e-002, 6.992892e-002, -4.434378e-002, -9.206894e-002, -1.907652e-002, 3.479550e-002, 4.335297e-002, -7.360957e-002, -3.972889e-002, -2.143646e-002, 4.583421e-002, -3.669823e-002, 2.082678e-002, 1.175834e-001, -6.779702e-002, 2.328183e-002, -3.204159e-002, -3.771511e-002, -9.196405e-003, -3.853223e-003, -1.234303e-003, -8.124166e-002, -6.312436e-002, 6.413612e-002, -4.751333e-002, -7.052345e-003, -5.129956e-003, -5.423458e-003, 2.129640e-002, 9.390933e-003, 1.375931e-002, -7.737693e-002, -3.009000e-002, -6.933979e-002, -2.197641e-002, -1.746655e-001, 5.341867e-003, 1.398080e-001, -9.165428e-002, -6.524533e-002, -7.872502e-002, 5.333648e-003, -1.168443e-002, -5.661832e-002, -7.120547e-002, -8.747531e-002, -9.701727e-002, -6.116220e-002, 1.025011e-002, 2.412421e-002, -4.280166e-002, -4.877222e-002, -2.913737e-002, -2.001666e-002, 2.089782e-002, -1.991432e-002, 4.732861e-002, -1.926756e-003, 2.103421e-002, -6.894924e-002, 9.377554e-002, 1.510877e-001, -5.177384e-002, -6.828867e-002, -5.381206e-002, 3.172452e-002, 2.146761e-002, -4.667719e-002, -4.711510e-002, -2.008373e-002, -1.098636e-002, 3.402921e-003, 2.631822e-002, 4.293191e-002, 3.999690e-002, 2.356748e-002, -1.876086e-002, -5.998957e-002, -1.235560e-002, -2.218834e-002, 3.015483e-002, -4.467512e-003, 2.156907e-002, -4.876423e-002, 6.453867e-002, 6.938344e-002, 9.500868e-003, -3.093425e-002, -3.898221e-003, 3.886009e-002, 3.780770e-002, -1.767534e-002, 1.632255e-002, 2.967183e-002, 2.614303e-002, 4.641664e-002, 7.324167e-002, 9.567182e-002, 9.005064e-002, 5.478241e-002, -1.107749e-002, -7.060146e-002, -6.803916e-003, -9.626069e-003, -1.140004e-002, -2.458166e-002, 2.550407e-002, -1.455947e-001, -3.721822e-002, 4.116117e-002, 4.178968e-002, -2.482254e-003, 8.919344e-003, 2.566958e-002, 9.914667e-003, -3.848214e-002, 5.154881e-002, 9.375552e-002, 3.237162e-002, -5.253766e-004, -2.785009e-003, -1.464035e-003, -2.605126e-003, -2.633785e-002, -4.560134e-002, -3.596344e-002, 2.252437e-002, 1.372467e-002, -2.506949e-002, -3.538836e-002, 6.922883e-003, -1.253900e-001, 4.876043e-002, 8.310893e-002, 2.573263e-002, -1.463323e-003, -4.971681e-003, 2.291725e-002, -2.392432e-002, -4.683606e-002, 4.801142e-002, 9.835414e-002, 1.068584e-001, 3.013571e-002, -2.308984e-002, -5.465805e-002, -5.635661e-002, -3.575352e-002, -1.014561e-002, 3.493484e-002, 5.224991e-002, 2.989907e-002, -8.687130e-003, -9.144877e-003, -6.001988e-002, -2.225763e-002, 3.793067e-002, -1.645484e-002, 8.199194e-003, 4.234573e-003, 1.750978e-003, 4.614997e-002, -1.216742e-002, -4.338462e-002, 4.090413e-002, 3.153041e-002, 2.132298e-002, 4.210734e-002, 3.273793e-002, 1.268998e-002, -7.397886e-003, 7.385253e-004, 1.631867e-002, 2.887174e-002, 4.578936e-002, 1.244325e-002, 8.466996e-003, 2.570664e-002, -6.193436e-002, -1.156599e-002, -6.861914e-002, -4.904693e-002, 8.041919e-002, -1.126222e-002, -6.024130e-002, -1.040654e-003, -2.006249e-002, -3.538121e-002, 2.234883e-002, 3.517939e-002, -4.935216e-002, -4.500835e-002, -4.302642e-002, -3.804484e-002, -3.647800e-002, -2.392257e-002, 1.870790e-003, 3.048680e-002, 3.372715e-002, 8.701807e-004, -8.954783e-003, 3.046504e-002, 4.043344e-004, 2.439603e-003, -7.433753e-002, -6.208907e-003, 7.153194e-002, -4.691484e-002, -4.678391e-002, 2.287128e-002, 3.256397e-003, -3.359334e-003, -1.006461e-002, -2.956607e-004, -2.666671e-002, 2.382661e-003, 3.453955e-002, 5.281855e-002, 4.613676e-002, 4.404544e-002, 4.275933e-002, 3.247816e-002, 1.177740e-002, -2.013327e-002, -4.038411e-002, -6.645269e-003, 4.578558e-002, 3.652699e-002, -1.784035e-002, -3.169955e-002, -3.912467e-002, 1.792018e-003, 1.010482e-001, 7.353975e-002, -2.068209e-002, -1.041938e-002, -5.599777e-003, -8.977118e-002, -7.097911e-002, -6.302964e-003, 3.505962e-002, 6.651656e-002, 6.838334e-002, 4.891151e-002, 3.065894e-002, 7.677274e-003, -7.830483e-003, -3.355786e-002, -5.505869e-002, -3.592345e-002, 1.667367e-002, 4.861633e-002, 3.043343e-002, 2.445731e-002, 4.691752e-002, 2.208995e-002, -8.426734e-003, -6.547366e-002, -2.356350e-002, 9.604269e-002, 2.675512e-002, -1.180149e-001, -7.780611e-002, 6.013848e-003, 1.181353e-002, 7.693414e-003, 6.839567e-003, -9.535341e-003, -1.831111e-002, -1.599522e-002, -1.857504e-002, -2.131346e-002, -4.534408e-002, -1.906796e-002, -2.192675e-002, 1.374130e-002, 2.917471e-002, 5.284776e-002, 5.147699e-002, 6.598455e-003, 1.184712e-002, -1.359750e-002, 1.397070e-002, 6.778035e-002, 4.349208e-003, -6.625299e-002, -1.662788e-002, 4.982479e-002, 4.144089e-002, -1.620399e-002, -5.764169e-002, -6.140384e-002, -4.636951e-002, -2.870222e-002, 1.995522e-004, 3.145262e-002, 2.415970e-002, -9.050020e-003, -4.995755e-002, -

© ISO/IEC 2004 — All rights reserved


Copyright International Organization for Standardization
Provided by IHS under license with ISO
No reproduction or networking permitted without license from IHS
Not for Resale

3.066337e-002, -7.116068e-003, 1.325229e-002, -4.385812e-003, -3.965128e-002, -2.544853e-002, -1.087592e-002, -4.251762e-002, -4.050926e-002, -5.075052e-002, -4.547443e-002, 3.232455e-003, 6.173132e-002, 7.529485e-002, 8.005514e-003, -7.085548e-002, -8.573207e-002, -5.994892e-002, -3.034751e-002, 2.556169e-002, 7.416772e-002, 1.150279e-001, 4.421836e-002, -1.451442e-002},
{-3.297506e-003, -1.020412e-002, -9.244029e-003, 3.994813e-003, 3.425918e-002, 4.671002e-002, 1.283663e-002, -1.618246e-002, -1.544972e-002, -9.034443e-003, -8.785751e-003, -1.755138e-002, -3.544196e-002, -4.526830e-002, -2.616279e-002, 3.764417e-003, 9.958819e-003, 1.950302e-002, 2.610596e-002, 6.028418e-003, -1.959440e-003, 2.697889e-002, 1.993170e-002, 3.383009e-002, 6.534753e-002, 9.566150e-003, -2.322685e-002, -1.907591e-002, 8.591038e-003, 2.883627e-002, -1.889000e-003, -2.795531e-002, -2.498718e-002, -1.421482e-002, -9.744371e-003, -8.926659e-003, -9.762020e-003, -2.019309e-003, 2.028513e-002, 4.658827e-002, 2.831356e-002, -2.173643e-002, -2.523691e-002, -1.149669e-002, -2.487515e-002, -3.595914e-003, -1.705018e-002, 4.142567e-003, 1.315786e-001, 3.076605e-002, -5.188773e-002, -7.020641e-002, -2.052580e-002, 2.883523e-002, 1.095051e-002, -8.523593e-003, -3.913994e-003, -1.057273e-002, -2.030842e-002, -1.111574e-002, 4.594580e-003, 4.076729e-002, 6.436614e-002, 5.578623e-002, 1.696698e-002, -3.887727e-002, -5.993724e-002, -3.995378e-002, -3.463459e-002, -2.757812e-002, -4.425120e-002, -4.153098e-003, 1.212305e-001, 3.614619e-002, -6.674731e-002, -1.109244e-001, -3.944964e-002, 3.208985e-002, 4.036243e-002, 2.920480e-002, 1.557985e-002, -1.271437e-002, -1.068126e-002, 4.070297e-002, 6.118974e-002, 5.603373e-002, 1.415033e-003, -5.697545e-002, -9.363703e-002, -1.080951e-001, -5.555546e-002, -6.811006e-003, 3.973524e-004, -1.334645e-002, -3.173071e-002, -1.485838e-003, -6.535471e-002, -4.778554e-002, -4.199041e-002, -4.871210e-002, 1.955817e-002, 6.337718e-002, 6.119557e-002, 4.356333e-002, 1.385864e-002, -5.938778e-002, -6.296914e-002, -3.080806e-002, 4.311189e-003, 1.181608e-002, -9.439838e-003, -1.000276e-002, -1.227928e-002, -3.737984e-002, -2.146907e-003, 7.712013e-002, 8.259495e-002, 3.271311e-002, 5.584124e-003, 2.086926e-002, -1.513154e-002, -2.490484e-002, -2.077378e-002, 1.593983e-002, 4.672074e-002, 5.121493e-002, 2.634316e-002, 1.590617e-002, -1.965171e-002, -1.025540e-001, -5.914153e-002, 9.949431e-003, 3.332573e-002, -1.607962e-002, -2.901494e-002, 1.346760e-002, 5.680556e-002, 5.892995e-002, 4.631791e-002, 6.451053e-002, 6.843797e-002, 3.615447e-002, 3.785314e-002, 4.207459e-002, 1.433602e-001, 1.355158e-001, 6.856276e-002, 2.546568e-002, 1.364770e-002, -6.370623e-002, -6.903079e-002, -1.944651e-002, -1.297963e-002, -5.179072e-002, 4.290312e-002, 1.426409e-001, 5.542527e-002, -1.211967e-001, -1.763037e-001, -1.082718e-001, -2.905126e-003, 5.746806e-002, 6.938110e-002, 4.894985e-003, -3.333808e-002, -3.725105e-002, 1.739411e-002, 4.166338e-002, -1.400425e-002, 1.531325e-002, -3.189228e-002, -2.741167e-002, 2.756546e-003, -8.808550e-002, -6.576687e-002, 2.615881e-002, 6.043704e-002, -1.228357e-002, 2.164543e-002, 3.983816e-002, 1.040613e-002, -8.216305e-002, -5.820788e-002, 1.041179e-001, 8.897485e-002, 4.934781e-002, 8.428818e-002, 5.097188e-002, -1.566973e-002, -2.142286e-002, -2.805338e-002, 1.007372e-002, -7.028510e-002, -7.489147e-002, -1.116687e-001, -1.031280e-002, 8.829231e-002, -1.503646e-003, -1.290126e-002, 6.020190e-002, 1.192613e-001, -1.087402e-003, -4.657660e-002, -1.080414e-001, -1.319777e-002, 6.585990e-002, 4.317606e-002, 4.851729e-002, 6.032965e-003, -2.554941e-002, -9.095297e-003, 1.819022e-002, 4.512941e-002, 4.668435e-002, -2.843249e-002, 1.155499e-002, 5.483021e-002, 2.105761e-002, -1.489355e-002, 7.189575e-002, 1.143187e-001, 2.966834e-002, 7.656135e-003, 2.638089e-002, 6.030697e-002, 2.640304e-003, 1.146139e-002, 1.956530e-002, 2.324444e-002, 5.318933e-002, -5.495601e-003, -4.263891e-002, -9.567938e-003, -8.535722e-003, -5.980583e-002, -6.695331e-002, 1.800849e-002, 3.712073e-002, 3.692782e-003, 9.322114e-003, 7.997420e-002, 4.923380e-002, -8.575569e-003, 3.006806e-002, 4.658908e-002, 1.272627e-002, -2.386401e-002, -2.391664e-002, -9.669811e-003, -6.437548e-002, -7.234311e-003, 4.106171e-002, 2.907867e-002, 3.547951e-003, -4.515122e-002, -8.024227e-002, -4.065661e-002, 5.750126e-003, -2.313448e-002, -8.113422e-002, -1.679584e-002, -1.015234e-003, 2.276066e-002, 8.312412e-003, 8.180415e-002, 4.441986e-002, -5.005536e-002, -6.086825e-002, -1.001447e-002, 7.925262e-003, -2.049664e-002, -4.806171e-002, -4.452774e-002, -1.072353e-001, -9.669184e-002, 1.009656e-002, 3.242986e-002, -5.546693e-003, -5.684772e-002, -8.650768e-002, -4.699954e-002, 3.882645e-003, -1.201830e-002, -3.732183e-002, -1.885250e-002, -2.105968e-002, 3.261641e-002, -1.919107e-002, 6.221373e-002, -2.069303e-002, -1.052193e-001, -7.261902e-002, 1.450297e-002, 2.828705e-002, 1.522949e-002, -1.278222e-002, -4.877351e-002, -5.910013e-002, -1.129365e-001, -5.417872e-002, 1.926942e-002, 2.516328e-002, -1.230027e-002, -4.460652e-002, -3.330924e-002, -7.824960e-003, -8.070250e-003, 1.033947e-002, -1.200191e-002, -3.031686e-002, 3.627090e-002, -4.901883e-002, 3.110780e-003, -5.643522e-002, -6.463946e-002, -2.136963e-002, 4.980538e-002, 4.272988e-002, 2.158718e-002, 2.007163e-002, -1.605876e-002, -1.130527e-002, -1.613887e-002, -2.405052e-002, -1.399209e-003, 3.050793e-002, 2.326715e-002, 5.775029e-003, -6.168835e-003, 1.696790e-002, 2.811622e-002, 4.134351e-002, -1.789456e-003, -3.747606e-002, -1.449002e-003, -2.051106e-002, 7.148935e-003, 1.080480e-002, -6.281779e-004, -8.397352e-003, 4.172053e-002, 1.879781e-002, -5.960117e-003, -3.828104e-003, 6.374511e-003, 2.799308e-002, 2.780997e-002, 5.473587e-002, 6.397634e-002, 6.809340e-002, 6.302196e-002, 4.408087e-002, 2.693444e-002, 3.488702e-002, 6.027534e-002, 4.485673e-002, -2.616162e-002, -2.870349e-002, -3.197769e-002, 2.650239e-002, -


© ISO/IEC 2004 — All rights reserved

Copyright International Organization for Standardization
Provided by IHS under license with ISO
No reproduction or networking permitted without license from IHS
Not for Resale

1.565796e-003, 4.168738e-002, 1.913865e-002, -1.764969e-002, 1.756426e-002, -2.874741e-004, -1.961306e-003, -3.213188e-002, -1.390891e-002, 7.601565e-002, 4.829815e-002, 3.256759e-002, 3.944392e-002, 3.542887e-002, 1.804626e-002, 2.761018e-003, -7.589178e-004, 1.796823e-002, 4.571396e-002, 1.911862e-002, -4.349350e-002, -9.539059e-004, -3.360185e-002, 4.508040e-002, -3.164544e-002, -5.827072e-003, -2.158391e-002, 4.142863e-003, 2.662303e-002, -1.763350e-002, 2.097138e-002, 1.455213e-002, -1.958231e-002, 9.748217e-003, 1.260810e-002, -4.623444e-002, -2.021329e-002, -1.727433e-002, -4.057476e-002, -4.025745e-002, -2.024257e-002, 3.455187e-003, 3.071875e-002, -5.895600e-003, -4.471498e-002, 1.805433e-002, -1.897793e-002, 3.531993e-002, -5.019682e-002, -5.269852e-002, -7.334890e-002, -1.534251e-003, 8.829272e-003, -1.100924e-002, 7.268479e-002, 1.017774e-001, -4.364968e-004, -9.043776e-002, -3.011364e-002, -4.543438e-002, -2.136132e-002, 8.399469e-005, -2.100044e-002, -2.875634e-002, -1.844701e-002, -3.134074e-003, 1.984077e-002, -2.750659e-002, -2.123590e-002, 3.930072e-002, -1.562208e-002, 3.162709e-004, -1.617598e-002, 1.251549e-002, 1.364939e-002, -1.546397e-002, -2.755366e-002, 7.657723e-003, 4.313969e-002, 1.932378e-002, -2.637723e-002, 1.064389e-002, 8.140900e-002, 5.278569e-002, 9.724474e-003, 1.773834e-002, 2.110422e-002, 4.666729e-003, -5.589922e-003, 1.460127e-003, 1.527170e-002, -3.112346e-002, 9.771036e-003, 3.665005e-002, -2.802412e-003, -1.166414e-002, -2.690663e-002, 3.250473e-002, 8.573453e-002, 4.865431e-002, -4.912130e-002, -1.029531e-001, -7.603868e-002, -2.326280e-002, 5.622549e-002, 1.013481e-001, 1.209444e-001, 7.582141e-002, 7.606236e-003, -1.801524e-002, 8.532952e-003, 1.950118e-002, 1.809767e-003, 4.463598e-003, 4.036325e-004, -3.600241e-002, 8.110695e-004, -7.543577e-003, 1.592679e-002, -1.104353e-002, -7.395311e-002, -2.594398e-002, 3.966596e-002, 4.545276e-002, -2.835358e-002, -1.070350e-001, -9.550438e-002, -2.739147e-002, 4.793085e-002, 6.674491e-002, 4.109887e-002, 6.222447e-003, -3.546218e-002, -6.534497e-002, -3.124500e-002, 2.996280e-003, -6.036489e-003, -5.961114e-004, -2.019016e-002, -3.111864e-002, -1.296142e-002, -6.690564e-002, 1.595356e-002, 3.839101e-003},
{1.114438e-002, 2.791242e-002, 3.054853e-002, 1.069970e-002, 4.180742e-003, 1.558001e-002, 2.672460e-002, 2.550137e-002, 1.223565e-002, 1.298727e-002, 7.834873e-003, -1.865429e-002, -3.289888e-002, -1.322489e-002, 3.452147e-002, 7.835498e-002, 1.000562e-001, 9.756265e-002, 8.620521e-002, 9.612810e-002, 6.174027e-002, 1.296876e-002, -4.338150e-003, 3.472849e-002, -3.163465e-002, -1.528901e-002, -6.761722e-003, -1.390108e-002, -2.473392e-002, -9.430791e-003, -1.671103e-003, -2.397960e-002, -4.617698e-002, -3.934146e-002, -2.473052e-002, -2.807556e-002, -3.749351e-002, -4.361164e-002, -3.747131e-002, -3.075895e-002, -1.298809e-002, -1.895608e-002, -2.712148e-002, -4.129014e-003, -2.038225e-003, -1.587878e-002, -2.038751e-002, 2.272119e-002, -2.410281e-002, 5.441713e-003, 1.657661e-002, 1.076534e-002, -2.277826e-002, -2.062285e-002, -1.089930e-002, -3.935592e-002, -5.625717e-002, 1.278261e-002, 9.383251e-002, 1.093178e-001, 7.850436e-002, 1.713550e-002, -4.115569e-002, -6.255114e-002, -3.982203e-002, -3.639326e-002, -9.631995e-002, -8.914029e-002, -5.914175e-002, -2.794664e-002, -2.174127e-002, 3.488351e-003, -4.087036e-002, -2.725990e-002, 1.059237e-003, 2.280029e-002, 6.750740e-003, 3.444577e-002, 4.115084e-002, -9.689248e-003, -4.971553e-002, 1.091785e-002, 3.832388e-002, 1.437627e-003, -3.004103e-002, -4.461711e-002, 7.892942e-003, 2.826453e-002, 3.445397e-002, 2.097943e-002, 1.092820e-002, -1.887616e-002, -5.432329e-002, -2.653520e-002, -2.206470e-002, 3.239450e-003, 4.221408e-002, 4.318638e-002, 5.171653e-003, -4.209096e-002, -2.771545e-002, 4.246999e-002, 5.894059e-002, -7.503476e-003, -7.353903e-002, -3.281036e-002, -2.259574e-002, -3.498694e-002, -4.345255e-002, -2.583844e-002, 3.166678e-002, 6.088213e-002, 3.562286e-002, -3.536305e-002, -3.854758e-002, 4.915067e-002, 1.904633e-002, -7.232093e-003, -1.383560e-002, -1.857681e-002, -2.959739e-002, 3.278146e-002, 7.400765e-002, 1.481014e-002, -6.202011e-002, 8.699429e-003, 5.594950e-002, 4.486198e-003, -2.460924e-002, 7.090604e-002, 8.497548e-002, 7.878970e-003, -6.980938e-002, -9.842542e-002, -6.859820e-002, 2.138554e-003, 5.671064e-002, 2.513658e-002, -2.561118e-002, 1.714367e-002, 1.142557e-002, -2.042338e-002, -1.479254e-003, -2.104631e-002, 3.468858e-002, -5.900911e-002, -1.919011e-002, 1.138553e-001, 1.000401e-002, 3.283805e-002, 1.065851e-001, 3.930261e-002, 5.292251e-002, 1.001547e-001, 3.873913e-002, 6.266039e-003, 2.968890e-002, 3.039984e-002, 1.006545e-004, -5.948460e-002, -1.621409e-002, 6.292840e-002, 4.310013e-002, 5.340589e-002, 1.891860e-002, -2.033432e-002, 2.243821e-002, -8.811680e-003, 1.209405e-001, -4.727766e-002, -1.438849e-001, 3.731023e-002, -1.778191e-002, -3.096570e-002, -2.816491e-002, -7.480765e-002, -3.206840e-002, -6.835472e-002, -8.525994e-002, -3.979635e-002, -1.561995e-002, -2.340586e-002, 4.597515e-002, -4.753066e-002, 1.400810e-002, 3.956240e-002, -4.182649e-004, 8.974396e-003, 2.631272e-002, -2.417365e-002, 2.979775e-002, -1.067918e-002, 7.705495e-003, 6.822284e-003, -9.127929e-002, 5.276510e-002, -7.577020e-003, 1.331728e-002, -5.521677e-003, -6.525293e-002, 9.328997e-003, 2.630707e-003, -2.290795e-002, 5.286939e-002, -1.966814e-002, -4.867675e-002, 6.326517e-003, -8.780943e-002, 7.902981e-002, 3.024627e-002, -9.711131e-002, -9.952601e-002, -3.418176e-003, -2.179736e-002, 1.973000e-002, -1.252268e-003, 3.868544e-005, -5.699663e-002, -4.121521e-002, 8.481337e-002, 1.698572e-002, 6.544232e-002, 2.363072e-002, -1.694906e-002, 3.489457e-002, 1.093605e-001, -3.202909e-004, 5.147453e-002, 5.710130e-002, -1.020749e-002, -1.060996e-002, -1.247471e-002, -4.345359e-002, -6.677987e-002, -8.788032e-002, -5.380314e-002, -1.980008e-003, 3.408163e-002, 1.852119e-002, -8.947744e-003, -

© ISO/IEC 2004 — All rights reserved


Copyright International Organization for Standardization
Provided by IHS under license with ISO
No reproduction or networking permitted without license from IHS
Not for Resale

3.189936e-002, -5.400608e-002, 1.844498e-002, 6.981475e-002, -1.872033e-003, 3.323837e-002, -1.124145e-003, -1.501571e-002, 2.520938e-002, 1.234368e-001, -1.639544e-002, -3.887492e-002, 2.322360e-002, 5.789836e-002, 6.355272e-002, 3.263858e-002, -4.486751e-002, -5.636307e-002, -1.981006e-002, 4.295289e-002, 2.467433e-003, 4.722298e-002, 1.075542e-002, 4.794440e-003, -2.108794e-002, 2.174235e-003, 3.106032e-002, -2.697155e-002, -3.950475e-002, -1.434864e-002, -2.488977e-002, -1.905042e-002, 1.696731e-002, 5.223182e-002, 2.640421e-002, -7.213877e-002, -6.600579e-002, -1.783583e-002, 1.141501e-002, 1.525178e-002, -1.745254e-002, -6.753120e-003, 4.490593e-002, 6.128156e-002, -2.436738e-002, 4.509419e-002, -4.183795e-003, 7.016059e-003, 3.004575e-002, 3.161191e-002, -2.487204e-002, -7.725386e-002, -6.227391e-002, -2.426545e-002, -1.013732e-002, -1.730248e-002, 2.216729e-002, -5.659129e-003, -4.237681e-002, -4.472353e-002, -3.155694e-002, 5.137774e-003, 4.094422e-002, 6.022974e-002, 4.071630e-002, 3.069798e-002, 5.488163e-002, 1.728500e-002, -2.777545e-002, 2.029468e-002, -1.834878e-003, 2.642234e-003, -4.901171e-003, -5.514001e-002, -5.907445e-002, -2.799816e-002, -2.639016e-002, 2.009338e-002, 2.265173e-002, -1.047409e-002, 2.818676e-002, 4.026110e-002, -6.479539e-002, -1.403217e-001, -6.563297e-002, -4.733469e-003, 3.423766e-002, 5.187305e-002, 2.557442e-002, -1.068215e-002, -1.345084e-003, 9.074352e-003, -3.204304e-003, 5.321984e-003, -2.871065e-004, -1.839097e-002, -5.151880e-002, -5.484887e-002, -6.232442e-004, 1.542767e-002, 1.685993e-002, 7.250492e-002, 4.738657e-002, -3.600414e-002, -2.174128e-002, 5.694938e-002, -1.581231e-002, -9.006979e-002, -7.489519e-002, -4.918715e-002, -2.428599e-002, -3.115044e-003, -1.457451e-002, -1.978849e-002, 2.357165e-002, 4.638438e-002, 3.271463e-002, -2.525842e-002, 3.407102e-003, -1.182184e-002, -5.087622e-002, -3.716063e-002, 1.029388e-002, -2.835417e-002, -3.588072e-002, 1.268895e-002, 1.223264e-002, -6.163946e-002, -9.475293e-002, 1.715876e-003, -2.045465e-002, -1.012148e-001, 2.876535e-003, 8.247835e-002, 1.031580e-001, 9.241225e-002, 5.845900e-002, 4.367270e-002, 5.540321e-002, 5.472765e-002, 3.022780e-002, -3.325798e-002, 1.093251e-003, 1.436755e-002, -4.299607e-002, -1.562464e-002, -2.908123e-003, 9.297187e-003, -3.258220e-002, -7.175676e-002, -7.088794e-003, 6.659422e-002, 4.473515e-002, 4.202470e-002, 6.014617e-002, -1.378468e-001, -9.082912e-002, 2.814032e-002, 6.930451e-002, 5.307441e-002, 7.390145e-003, 6.630265e-003, 3.643891e-002, 4.149448e-002, 2.851446e-002, -3.170611e-002, 6.363328e-004, 1.274908e-002, 2.701053e-002, -3.929893e-003, -5.224047e-002, 2.326179e-002, 1.555040e-002, -3.258490e-002, 3.189834e-003, 5.883860e-002, 3.364254e-002, -1.607926e-002, 5.582512e-002, -5.488275e-002, -9.425450e-002, -3.124913e-002, 2.481841e-002, 9.160065e-003, -3.540585e-002, -1.965993e-002, 1.649690e-002, 2.418833e-002, 2.368940e-002, -2.168802e-002, 1.797414e-002, 1.119441e-002, 1.157771e-001, 7.988682e-002, 1.471871e-002, 2.686814e-002, 2.513338e-002, 4.404352e-002, 5.346196e-002, 2.288379e-002, -3.491651e-003, -2.898096e-002, 1.766353e-002, 1.049430e-002, 6.140651e-003, 8.931797e-003, 2.234970e-002, -6.606846e-003, -4.343467e-002, -3.069629e-002, -9.195221e-003, -1.646057e-003, 1.470719e-002, 1.008448e-003, 4.482739e-002, 4.464362e-003, 1.240417e-001, 1.024740e-001, 7.120696e-002, 8.553435e-003, -5.960110e-002, 1.120965e-002, 4.908936e-002, -3.743744e-003, 3.362398e-002, 5.409729e-002, 3.901682e-002, 2.562829e-002, 4.718415e-002, 5.996259e-002, 1.843228e-002, -3.746173e-002, -6.114506e-002, -4.574796e-002, -3.980721e-002, -2.785315e-002, 8.895390e-003, 1.170173e-003, 7.013187e-003, -2.164911e-005, 5.158622e-002, 1.561831e-002, -1.614779e-002, -6.209423e-002, -9.835749e-002, -2.426105e-002, -1.034343e-002, -9.300202e-002, -6.609404e-002, -4.987926e-002, -3.909046e-002, -1.758691e-002, 1.089024e-002, 4.793229e-002, 9.016532e-004, -6.957939e-002, -8.593150e-002, -7.193141e-002, -6.310976e-002, -4.893690e-002, -2.484670e-003, -3.024391e-002, -7.052522e-002, -1.180849e-002},
{-4.301474e-003, -3.479997e-002, -4.170111e-002, -2.804719e-003, 5.162538e-002, 1.049575e-001, 1.307984e-001, 9.418451e-002, 2.060900e-002, -3.644179e-003, 2.493993e-003, 2.085099e-002, 1.335786e-002, -6.903703e-003, -2.291172e-002, -3.129402e-002, -4.221944e-002, -3.851532e-002, -1.470284e-002, -1.282458e-002, -3.891477e-003, 4.376625e-003, 3.380007e-003, -2.849192e-002, 8.013913e-002, -1.011897e-002, -7.946446e-002, -9.984002e-002, -5.901029e-002, 9.544686e-003, 5.769539e-002, 3.109487e-002, -3.613625e-002, -6.167290e-002, -4.037702e-002, 1.020143e-002, 3.110259e-002, 2.394002e-002, 1.952165e-002, 1.990126e-002, -1.022552e-002, -1.761945e-002, -1.133202e-002, 3.516208e-004, 7.671738e-003, 2.075681e-002, 1.589135e-002, -1.322115e-003, 1.083146e-001, 8.893625e-002, 8.893909e-003, -1.009618e-001, -1.185417e-001, -7.218487e-002, -1.272740e-002, -3.019734e-002, -5.767896e-002, -3.245484e-002, -5.484922e-003, 9.793845e-004, -3.733186e-002, -6.101331e-002, -1.630802e-002, 4.519628e-002, 4.936453e-002, 1.914349e-002, -1.005029e-002, 1.246608e-002, 2.779369e-002, 4.554275e-002, 2.885104e-002, 1.785178e-002, -1.742477e-001, -6.482172e-003, 9.647665e-002, 4.064346e-002, -2.703428e-002, -1.273620e-002, 2.339731e-002, 6.389283e-003, 5.007771e-003, 9.524242e-002, 8.738231e-002, -4.747651e-003, -1.018386e-001, -1.234312e-001, -4.176373e-002, 4.902100e-002, 8.712065e-002, 6.032430e-002, -8.362345e-003, -9.842240e-003, 1.694647e-002, 4.907350e-002, 3.835991e-002, 3.163500e-002, -1.291392e-001, -1.311102e-002, 8.246968e-002, 5.318080e-002, -3.027476e-002, -1.170104e-002, 2.133958e-002, -2.060001e-002, -2.546743e-002, 9.504407e-002, 9.054985e-002, 2.212802e-002, -3.692436e-002, -4.358059e-002, 1.783880e-002, 2.380695e-002, 2.990575e-003, 3.668485e-003, 1.065647e-002, -4.166051e-003, -3.482429e-003, 2.150109e-003, 1.163862e-003, 1.627697e-002, -


© ISO/IEC 2004 — All rights reserved

Copyright International Organization for Standardization
Provided by IHS under license with ISO
No reproduction or networking permitted without license from IHS
Not for Resale

3.476618e-002, 7.991498e-002, 1.358945e-001, 2.448090e-002, -9.459815e-002, -2.237046e-002, 5.358278e-002, -1.993663e-002, -8.960829e-002, 2.093729e-002, 6.468014e-002, 1.492058e-002, -3.033365e-002, -1.796179e-002, 5.614924e-002, 6.344596e-002, -7.633520e-003, -8.214636e-002, -5.192034e-002, -3.990947e-003, -2.394514e-002, -3.428138e-002, -4.459834e-002, -2.924037e-002, -8.965403e-002, -4.455763e-002, 7.189729e-002, 1.379539e-002, -8.532309e-002, 2.907840e-002, 1.310377e-001, 2.975434e-002, -5.255875e-002, 5.656712e-002, 5.802190e-002, 2.056469e-002, -4.325491e-002, -5.742448e-002, 2.790739e-002, 8.286971e-002, 1.774571e-002, -3.088609e-002, -3.419456e-002, -7.374579e-003, -6.667081e-002, -4.823993e-002, -3.138480e-002, -1.843757e-002, 1.504304e-001, -3.399263e-002, -1.062835e-002, -1.841622e-002, -7.372304e-002, -4.922961e-002, -8.403765e-003, -7.734813e-002, -4.862325e-002, 3.170135e-002, -8.620215e-003, 6.197718e-002, 5.261241e-002, -1.028950e-001, -5.300846e-003, 6.522669e-002, -8.530582e-002, -6.189732e-002, -2.727665e-003, 2.950436e-002, -4.264295e-002, 2.480495e-003, 3.557977e-002, 3.399887e-002, 1.027718e-001, -4.953110e-002, -4.517809e-002, -1.039324e-002, -9.711795e-003, 1.101670e-002, -1.978494e-003, -2.780195e-002, -3.316333e-002, -3.356930e-002, -8.496752e-002, -7.820962e-002, 9.430887e-002, -5.918587e-002, -6.230896e-002, 1.624269e-002, -4.523129e-002, 5.537152e-003, 5.349907e-002, 5.070542e-002, 1.303141e-002, 9.385542e-003, -1.575468e-002, -3.622770e-002, -1.842658e-002, -4.722109e-003, 8.194207e-003, -2.976700e-002, 1.528650e-002, 1.833418e-002, -5.217529e-003, 3.049751e-002, 4.723228e-002, -5.272111e-002, -4.681511e-002, -5.958311e-002, -1.022160e-003, 7.264018e-002, 4.356170e-002, -1.772668e-002, 4.370960e-002, 1.536096e-001, 1.007496e-001, 4.555652e-003, -4.746044e-003, 2.416120e-002, 8.455155e-003, -3.143778e-002, 7.600710e-002, 9.473595e-002, 3.451893e-002, -1.726344e-002, 2.552442e-002, -1.233216e-002, -1.717496e-002, 2.971494e-002, 1.066693e-001, -1.067466e-002, 5.332392e-003, 3.091785e-003, 8.275449e-003, 1.270634e-002, -5.712098e-003, -4.278854e-002, -1.986319e-002, 5.069230e-002, 1.158229e-002, -7.197812e-002, -3.537306e-003, -2.389505e-003, 6.872885e-003, 2.229407e-002, 9.221654e-002, 7.314262e-002, -7.588582e-003, -8.012558e-003, 2.558608e-002, -2.912178e-002, -2.034910e-002, 7.114243e-003, 7.216231e-002, -9.811936e-003, -4.999543e-003, 2.602902e-002, 2.000273e-002, 1.962630e-002, -5.058171e-003, -4.787672e-002, -5.028725e-002, -7.575795e-003, -3.715138e-002, -4.001029e-002, 1.761577e-002, -3.705857e-003, 1.080279e-002, 6.421384e-002, 2.716162e-002, -1.824020e-002, -2.169406e-002, 3.466983e-002, 1.886758e-002, -4.667409e-002, -4.174808e-002, -1.798148e-002, 2.298597e-002, 1.889159e-003, -7.201345e-002, -1.503603e-002, 7.338976e-003, -1.836776e-002, -5.409423e-002, -8.713477e-002, -7.845497e-002, -1.496875e-002, -7.365486e-003, 4.913299e-003, 1.845480e-002, -1.341187e-002, -1.625512e-002, 2.287458e-002, -4.651241e-002, -5.321179e-002, 2.336876e-002, 6.359595e-002, 8.337871e-003, -3.194711e-002, -2.812200e-002, -1.116944e-002, -2.062655e-002, -6.987547e-005, -3.645939e-002, -6.527864e-002, -2.345273e-002, -1.206264e-002, -4.264069e-002, -7.019013e-002, -4.124339e-002, 2.772012e-002, 2.488304e-002, 7.002215e-003, 7.925531e-003, -1.748059e-002, -4.104900e-002, -5.691531e-002, -7.074769e-002, -2.260272e-002, 4.382559e-002, 4.176834e-002, 1.061209e-002, -2.432176e-003, 4.664912e-003, 2.851477e-002, 8.009894e-003, -3.782154e-002, 2.836849e-002, 1.568514e-002, -1.056070e-002, 5.129851e-003, 1.369153e-002, 1.133539e-002, 4.673454e-002, 6.979191e-002, 2.098761e-002, 3.882727e-003, -2.220219e-003, -3.008183e-003, -3.184991e-002, -8.264337e-002, -6.393054e-002, -3.631910e-003, -2.571556e-002, -1.638869e-002, 1.799653e-002, 2.626168e-002, 3.569588e-002, 2.824484e-002, 2.661566e-002, -7.086597e-002, -3.011213e-002, 5.417113e-002, 4.938064e-002, 5.372742e-002, 6.752001e-002, 7.956815e-002, 9.496453e-002, 7.708945e-002, 7.181259e-003, -1.063619e-004, -1.262323e-003, 8.784332e-003, -1.786546e-002, -3.166708e-002, -1.156676e-002, 2.740089e-002, -5.161679e-002, 2.073369e-002, 5.317585e-003, 1.967172e-002, 5.739719e-002, 2.102449e-002, 9.992644e-003, -4.977214e-002, -4.326193e-002, 2.526191e-002, 2.092860e-002, 1.748358e-002, 3.426772e-002, 5.240586e-002, 6.549081e-002, 2.423513e-002, -3.597762e-002, -3.023592e-003, -3.591964e-003, 1.094217e-002, -6.246060e-003, 3.277321e-002, 4.546408e-002, 2.200156e-002, -1.577554e-002, 1.062952e-002, -9.101617e-002, -2.376005e-002, 2.361515e-002, 2.453808e-002, 5.967343e-003, 1.054530e-002, 6.872697e-003, 1.711124e-002, -3.788779e-002, -7.134668e-002, -5.779508e-002, -2.111241e-002, -1.927011e-003, -3.492590e-002, -5.631409e-002, -4.502109e-003, -1.648310e-002, 1.049131e-002, -8.226857e-003, 3.762888e-002, 3.383435e-002, -2.343434e-002, -3.468171e-002, 2.969545e-003, 1.037373e-002, 1.404975e-002, -3.803529e-002, -5.419117e-002, 2.796613e-002, 2.367851e-002, 1.692923e-002, 2.286372e-002, -2.885629e-002, -8.273744e-002, -7.879180e-002, -3.420155e-002, -1.336378e-002, -5.673357e-002, -4.513113e-002, 4.404327e-003, -1.885028e-002, 2.652169e-002, -1.449477e-002, 1.778757e-002, 3.746264e-003, 8.715806e-003, 1.135714e-002, -1.398793e-002, -1.823077e-002, 2.711647e-002, 1.661180e-002, -7.743775e-003, 1.518442e-003, 5.984175e-003, 2.496174e-003, 1.617869e-002, 1.135120e-002, -2.041387e-002, -2.098206e-002, 7.149337e-003, 4.745600e-003, -3.595743e-002, -1.078836e-002, 9.840019e-003, -2.622907e-002, 2.651063e-002, -2.922556e-002, 1.836708e-002, 5.089735e-003, 3.544829e-002, 3.456738e-002, -3.197624e-002, -7.066252e-002, -3.712272e-002, -4.818658e-003, 1.200435e-002, 2.181368e-002, 1.425420e-002, 1.029245e-002, 1.704206e-002, 3.432375e-002, 2.547738e-002, 4.340175e-002, 5.149159e-002, 1.975066e-002, -9.752405e-003, 1.917796e-002, 1.915311e-002, -1.828733e-002, 5.844858e-002, 4.429695e-004, 2.946570e-002},

© ISO/IEC 2004 — All rights reserved


Copyright International Organization for Standardization
Provided by IHS under license with ISO
No reproduction or networking permitted without license from IHS
Not for Resale

{1.015589e-001, 2.422189e-002, -5.162260e-002, -9.146477e-002, -8.332575e-002, -6.878438e-002, -4.548330e-002, -3.253778e-002, -2.137775e-002, -2.502293e-002, -2.988576e-003, 4.598297e-002, 8.430890e-002, 9.601305e-002, 8.943261e-002, 9.152030e-002, 1.103968e-001, 7.561740e-002, -2.297716e-002, -1.105760e-001, -9.756890e-002, -3.622386e-002, -8.579289e-002, -4.814159e-002, 1.318094e-001, 6.644345e-002, -5.146983e-003, -4.442162e-002, -3.887038e-002, -2.839048e-002, -3.707431e-003, 2.227083e-003, -7.595756e-004, -2.055033e-002, -2.705687e-002, 7.229805e-003, 2.873383e-002, 1.063763e-002, -4.522285e-002, -9.123783e-002, -7.422600e-002, -1.232037e-002, -1.083306e-002, -3.860442e-002, -3.483929e-002, 1.594771e-002, -1.557023e-002, -1.029119e-003, 3.189682e-002, -7.120380e-003, -2.746420e-002, -9.733309e-003, 1.492982e-002, 2.535618e-002, 4.285431e-002, 3.450379e-002, 1.583982e-002, -1.964964e-002, -1.299663e-003, 3.415448e-002, 5.651214e-002, 2.585823e-002, -4.662862e-002, -1.338831e-001, -1.692301e-001, -1.031885e-001, -1.232813e-002, 4.936792e-002, 4.597121e-002, 6.585725e-002, 5.690948e-002, 5.960667e-002, 4.018435e-002, -2.857598e-002, -5.946797e-002, -1.990760e-002, 2.402055e-002, 3.421654e-002, 2.298926e-002, 1.229465e-004, -2.195805e-002, -1.590995e-002, 1.933688e-002, 2.399059e-002, -4.247944e-003, -2.997301e-002, -3.177865e-002, -6.319496e-003, 2.150446e-002, 4.585942e-002, 6.182537e-002, 1.216849e-001, 8.877969e-002, 7.913390e-002, 7.920833e-002, 7.296811e-002, 1.044216e-001, 4.545203e-002, -3.078087e-002, -2.209518e-002, 4.793467e-002, 3.205137e-002, -2.002481e-002, -3.056329e-002, -2.539451e-002, 7.868596e-003, 2.520632e-002, -1.501355e-002, -4.926823e-002, -6.646727e-002, -7.946761e-002, -3.902040e-002, 4.465001e-002, 1.016917e-001, 1.076460e-001, 1.178688e-001, 3.409046e-002, 9.833927e-003, 1.460706e-002, 2.376220e-002, 8.936533e-002, 2.975286e-003, -1.025438e-001, -1.089516e-001, 2.201711e-002, 4.062668e-002, -4.637030e-003, -1.767254e-002, -1.625782e-002, 3.601321e-003, 4.792390e-003, 2.384871e-002, 2.643093e-002, -5.584629e-003, -4.427431e-002, -6.318954e-002, -4.840734e-002, -1.595978e-002, -3.468940e-005, 1.929435e-002, -5.853015e-002, -3.416528e-002, -5.023344e-002, -1.310130e-002, 1.298791e-001, 8.067783e-002, -2.515082e-002, -8.008325e-002, 2.903938e-002, 4.174754e-002, -4.327478e-003, 3.482641e-002, 2.132437e-002, -1.457200e-002, 1.840150e-002, 2.588167e-002, -2.103378e-002, -4.936021e-002, -2.967590e-002, 1.118142e-002, 7.611322e-002, 4.126621e-002, -3.362999e-002, -5.348115e-002, -8.249038e-002, -2.294407e-002, -5.493757e-002, -2.812188e-003, -4.705893e-002, -2.914886e-002, 2.880532e-002, 5.172733e-002, 7.591232e-002, 2.368378e-002, -5.028518e-002, 1.419326e-002, 4.881059e-003, 8.147989e-003, 1.235036e-002, -2.422960e-002, -5.778285e-002, -1.468650e-002, 2.414478e-002, -2.266930e-002, 5.340197e-004, 3.272685e-002, -2.940407e-002, -6.026435e-002, -3.731097e-002, 3.954546e-002, 9.165281e-003, 2.848516e-002, 3.581450e-002, -6.305256e-002, 6.568652e-003, 4.271534e-002, 1.362408e-002, 2.742633e-002, 1.645333e-002, 4.835490e-002, -6.679358e-002, 5.871763e-003, 2.997798e-003, 1.275038e-002, -2.170303e-002, 3.081250e-002, 5.689469e-002, -3.338220e-002, -7.789018e-002, -3.074926e-002, -2.250574e-002, -3.332450e-002, -2.294077e-002, 2.278750e-002, 1.864791e-002, -1.928567e-002, 4.736586e-002, -1.389518e-002, -2.329175e-002, -5.061692e-002, -9.283335e-002, -2.947011e-002, -1.215227e-002, 4.277478e-002, -8.662574e-002, -2.520684e-002, -4.221362e-003, -2.903543e-002, -6.684514e-003, 5.360139e-002, 8.242677e-002, 3.944119e-002, -9.062261e-003, -3.613562e-002, 3.801671e-004, 6.352150e-003, -2.124765e-002, -4.136605e-002, -2.896653e-002, -3.689380e-002, 4.438881e-002, 7.570934e-003, -3.624874e-002, -1.143165e-001, -8.784709e-002, -4.797438e-002, -4.153742e-002, 3.150691e-002, -4.577585e-002, -4.898415e-002, 5.728961e-002, -4.989511e-003, -6.337135e-002, -7.739995e-002, -7.066701e-002, -5.088464e-002, -3.522277e-002, -4.855160e-002, -1.942332e-002, 2.282506e-002, 5.713858e-003, -2.820073e-002, 7.329570e-003, -2.308594e-003, 7.666138e-002, 7.084770e-003, -3.894925e-002, -6.366663e-002, -4.303585e-002, -3.434538e-002, -6.083585e-002, 1.373229e-002, 3.637870e-002, -4.519862e-002, 4.721708e-002, 5.814870e-002, 4.916635e-003, -1.998791e-002, -1.976619e-002, -2.804359e-003, 5.525616e-003, -3.074354e-002, -1.711777e-002, 2.765949e-002, 1.558556e-002, -2.100338e-003, 4.318219e-002, 1.857731e-002, 4.772257e-002, 2.160832e-002, 3.532715e-002, -5.575849e-003, 1.196114e-002, -7.629936e-003, -6.028892e-002, -3.355394e-002, 8.043402e-002, 3.689592e-002, 2.944863e-002, 4.801406e-002, 1.843241e-002, -1.095048e-003, 1.617833e-002, 2.562617e-002, 2.226758e-002, -1.278058e-002, -5.524102e-003, 2.523030e-002, -3.759620e-003, -1.146758e-002, 2.051236e-002, -3.759523e-003, 6.202689e-002, 9.215298e-002, 8.037191e-002, 2.570679e-002, 4.732220e-002, 2.979340e-002, -2.904118e-002, -6.764315e-002, 3.545502e-002, 1.028519e-001, 4.714610e-002, 1.785743e-002, -1.478264e-002, -4.513876e-002, -4.133680e-002, -2.673975e-002, -1.167090e-003, 3.745129e-003, 2.485823e-002, 2.521254e-002, -9.111599e-003, -2.183029e-002, -4.281559e-002, -3.239879e-002, 5.782171e-002, 4.705745e-002, 5.674474e-002, -1.778998e-003, 2.603423e-002, 6.708749e-002, 1.964849e-002, -6.420821e-002, -7.602418e-002, -2.328600e-004, 5.923139e-002, 9.311326e-003, -3.891971e-002, -5.589509e-002, -4.169442e-002, -8.231680e-003, 2.850442e-002, 4.260900e-002, 3.980284e-002, 1.360820e-002, -1.425427e-002, -1.961632e-002, -7.461507e-002, -3.530288e-002, -3.454381e-002, -1.182099e-002, 1.795762e-002, -5.937969e-002, 6.958140e-003, 6.929097e-002, 3.345477e-002, -6.561198e-003, -7.628080e-002, -9.851853e-002, -3.111611e-002, 3.322805e-002, -8.017102e-003, -3.141482e-002, -1.632772e-002, 1.618155e-002, 3.305296e-002, 2.060319e-002, 1.440842e-002, 2.429264e-003, -7.561373e-003, -2.493421e-003, -5.927807e-002, -1.177461e-002, -


© ISO/IEC 2004 — All rights reserved

Copyright International Organization for Standardization
Provided by IHS under license with ISO
No reproduction or networking permitted without license from IHS
Not for Resale

8.547411e-002, -1.819133e-002, -2.492075e-002, -3.338279e-002, 4.212104e-002, 3.709842e-002, 9.571345e-003, 5.799416e-002, 7.489799e-002, 8.290292e-003, -4.880558e-002, 1.876057e-002, 4.002675e-002, 1.400469e-002, 8.295399e-003, 1.515194e-002, 1.016648e-002, 8.075686e-003, 1.314069e-002, 5.416617e-003, 1.837510e-002, 4.343831e-002, 2.361012e-002, 1.096772e-003, -3.514775e-002, 3.015459e-002, 6.707459e-003, -4.039819e-002, -3.564274e-002, -1.677992e-002, 1.206700e-002, 2.622639e-002, 1.056666e-002, 2.191166e-002, -2.776711e-003, 2.189264e-003, 2.962226e-002, 2.087434e-002, -1.680392e-003, -9.227596e-003, -1.644097e-002, -7.414056e-003, 5.878826e-003, 1.227866e-002, 3.841458e-002, 7.906012e-002, 8.756703e-002, 1.340848e-003, -1.625593e-003, 3.043466e-002, 7.333591e-002, 1.716199e-002, -5.215811e-002, -4.037130e-002, 2.470306e-002, 6.240769e-002, 4.747883e-002, 2.027421e-002, 1.354876e-002, -5.015020e-003, -1.187233e-002, 1.578944e-002, 4.244479e-003, -2.080554e-002, -2.804811e-002, -1.290132e-002, -4.388244e-003, 1.113770e-002, 3.652672e-002, 6.889333e-002, 7.511436e-002, -2.354824e-002, -5.249761e-002, -4.412166e-002, 1.011507e-002, 1.367755e-002, -5.944039e-003, -3.547349e-002, -3.635005e-002, -4.365605e-002, -7.023503e-003, 3.359179e-002, 4.111563e-002, 2.235772e-002, -2.362349e-002, -1.076264e-002, 2.110146e-002, 6.514987e-005, -1.537553e-002, -3.791862e-003, -9.042450e-003, 5.021845e-003, -7.347218e-003, -1.337738e-002, 1.441121e-002, -1.691214e-002, -1.008974e-001, -6.115807e-002, 3.606505e-003, 3.891378e-002, 4.902743e-002, 4.370914e-002, 2.910039e-002, -1.918002e-002, -1.638896e-002, 2.388503e-002, 3.403020e-002, 2.079400e-002, -9.513101e-003, -2.083108e-002, 1.054541e-002, 2.135590e-002, 1.042386e-002, 2.704713e-003, -1.465210e-002, -1.154036e-002, -6.669551e-002, -9.229261e-002, -3.598852e-002, 6.745344e-004},
{2.851586e-002, -1.422792e-002, -4.182186e-002, -3.120386e-002, 2.146073e-003, 1.352402e-002, 1.917907e-002, 7.380202e-003, -1.404790e-002, -1.678487e-002, 2.414332e-002, 7.261508e-002, 5.813110e-002, 5.506220e-003, -4.608760e-002, -5.335253e-002, -9.120249e-003, 3.067462e-002, -4.278363e-002, -6.463403e-002, -3.636255e-002, -5.114664e-002, 1.074916e-002, 5.274076e-002, 5.576331e-002, 1.150865e-003, -4.359566e-002, -3.496835e-002, 1.196720e-002, 3.315868e-002, 2.921133e-002, 1.810472e-003, -3.862825e-002, -5.468176e-002, -1.540866e-002, 4.430018e-002, 6.610287e-002, 2.195113e-002, -4.145476e-002, -5.600735e-002, -3.815285e-003, 7.653483e-002, 1.989396e-002, -3.010324e-002, 4.828881e-003, -5.317308e-002, 9.011305e-004, -4.638330e-004, 6.608812e-002, 4.740709e-003, -5.119718e-002, -1.823110e-002, 3.959465e-002, 5.704331e-002, 3.513726e-002, -1.565534e-002, -6.379873e-002, -8.908465e-002, -5.623379e-002, -1.357891e-002, 8.810845e-003, -1.524914e-002, -4.970804e-002, -4.956826e-002, 1.442503e-003, 8.208346e-002, 7.378944e-002, 2.047726e-002, 4.670642e-002, -4.982620e-002, -6.379253e-003, -6.125081e-002, 5.917815e-002, -9.733941e-003, -7.314157e-002, -3.129517e-002, 4.944740e-002, 6.228449e-002, 2.828400e-002, -6.524254e-003, -2.356195e-002, -1.843235e-002, 4.277172e-002, 5.023656e-002, 4.548984e-003, -4.513305e-002, -1.001002e-001, -9.188182e-002, -8.804958e-003, 7.539997e-002, 5.008420e-002, 2.945625e-002, 7.090796e-002, -3.423247e-002, -1.981467e-003, -9.659962e-002, 8.478369e-002, 1.838471e-002, -3.767402e-002, -9.777802e-003, 7.411472e-002, 4.763529e-002, 9.846998e-004, 1.337458e-002, 3.180771e-002, 4.251418e-002, 7.330236e-002, 4.868510e-002, 2.037517e-002, -8.892725e-003, -5.900859e-002, -9.012295e-002, -2.571715e-002, 7.691370e-002, 1.286060e-002, -2.041706e-002, 6.341765e-002, -1.119453e-002, 3.635139e-002, -3.604806e-002, 3.782096e-002, -1.307210e-005, -6.627026e-002, -3.441986e-002, 5.155526e-002, -2.914297e-002, -7.398824e-002, -1.897724e-002, 1.395610e-002, -1.525044e-002, 1.877051e-003, 5.300327e-002, 1.091786e-001, 1.234247e-001, 5.983989e-002, -2.584519e-002, -3.518082e-002, 4.149462e-002, 2.080651e-002, -5.255661e-002, 2.400902e-002, 3.307056e-002, 6.452896e-002, 4.402693e-002, -1.289190e-001, -6.797262e-002, -6.227535e-002, -4.900083e-002, -2.948196e-003, -1.243049e-001, -1.756873e-001, -5.005906e-002, -7.058669e-003, -6.258916e-002, -3.933671e-002, -3.275937e-002, -4.041549e-002, -6.147252e-003, -1.740039e-002, -2.205427e-002, -3.630745e-002, -4.733194e-002, -1.255041e-002, -7.231571e-003, 3.069328e-002, 4.670171e-002, 3.865968e-002, 7.859118e-002, -2.437700e-004, 3.392648e-002, 5.669780e-002, 4.913471e-002, 9.006383e-002, 5.567312e-003, -3.223490e-002, 8.085156e-002, 3.264587e-002, -1.550872e-002, 4.212362e-002, 8.157361e-002, -5.269966e-002, -1.917161e-002, 1.312391e-002, 8.808724e-003, -1.276690e-002, -2.187148e-003, 4.298109e-003, -9.170503e-003, -3.755364e-002, -1.794859e-002, -6.175122e-002, 2.110496e-002, 8.609672e-002, 8.847501e-002, 5.396466e-002, 2.472919e-002, 1.249559e-001, 2.405136e-002, -1.220314e-002, 6.345067e-002, 1.773889e-002, -3.286065e-002, 6.067240e-002, 1.328875e-001, -4.385112e-002, -7.095374e-002, 6.386048e-003, -3.776264e-002, -5.148781e-002, 1.505327e-002, 3.130064e-002, 1.432165e-002, -6.111420e-002, -1.837903e-002, -6.508573e-002, 3.772928e-003, -6.520152e-002, -6.549022e-002, -5.078164e-002, -3.376172e-002, 8.219860e-002, -2.310407e-002, 2.467806e-002, 7.934836e-002, -2.472362e-002, -1.267098e-002, -5.528368e-003, 2.189222e-002, -3.835063e-003, -9.118149e-003, 9.674196e-003, -4.135350e-002, -7.194351e-002, -5.081972e-002, -2.340411e-002, -1.459536e-002, -2.558561e-002, 2.576652e-002, -7.329404e-003, 1.316113e-002, -3.154711e-002, -4.405773e-002, -5.618515e-002, -2.606660e-002, 3.067575e-002, -4.852063e-002, 1.876517e-002, 6.653590e-002, -6.223661e-002, 2.768149e-003, 2.609429e-002, 1.845717e-002, 1.174534e-002, 3.559371e-002, 5.964950e-002, 7.608247e-002, 6.569960e-002, -2.232381e-005, -5.528995e-002, -4.184587e-002, -1.117979e-002, -1.100878e-002, 3.205336e-003, 1.529902e-002,

© ISO/IEC 2004 — All rights reserved


Copyright International Organization for Standardization
Provided by IHS under license with ISO
No reproduction or networking permitted without license from IHS
Not for Resale

2.859364e-002, -4.766582e-003, -5.370843e-002, -1.740307e-003, -2.396655e-002, -5.632115e-002, 4.438013e-003, 5.996019e-002, -5.487206e-002, -3.163018e-002, 4.836040e-002, 4.493008e-002, 8.876581e-005, -7.235149e-003, 1.216142e-002, 5.081362e-002, 6.976737e-002, 1.351150e-002, -5.421396e-002, -3.847866e-002, 2.946082e-002, -4.196738e-002, 8.767869e-003, 1.928353e-002, 3.014573e-002, -4.902372e-003, -2.726461e-002, -2.063323e-002, -2.955520e-002, -6.080609e-002, -1.166865e-003, 4.994503e-002, -3.373161e-002, -8.320435e-002, 3.252131e-003, 3.688480e-002, -1.160830e-002, -5.823169e-002, -6.028546e-002, -3.526957e-002, -4.212703e-003, -3.332990e-002, -4.411438e-002, 4.488856e-003, 3.120093e-002, -4.989208e-002, 2.543571e-002, 2.654941e-002, 7.096916e-002, 2.313240e-002, -2.901463e-002, -2.061906e-002, -4.519768e-003, -2.245628e-002, 1.336488e-002, 2.748924e-002, 1.888879e-002, -8.864787e-002, -9.326972e-002, 4.152290e-003, 3.579022e-004, -5.371012e-002, -8.328988e-002, -6.284471e-002, -1.429360e-002, 7.564090e-003, 1.607862e-002, 3.015774e-002, 3.199636e-002, -3.918120e-002, 2.765286e-002, 2.254461e-002, 7.370202e-002, -3.150317e-002, -6.158908e-002, 3.255500e-002, 4.241730e-002, 2.533806e-002, 3.138084e-002, -4.046403e-003, 4.704698e-002, 3.244239e-002, -1.126855e-001, -6.428083e-002, 1.393044e-002, 2.276253e-002, 1.726791e-002, 4.073407e-002, 7.684412e-002, 7.417333e-002, 5.180281e-002, 1.971755e-002, 2.425585e-002, -8.424550e-003, 5.123425e-003, 7.821474e-003, -1.666670e-002, -9.369495e-002, -8.819612e-003, 4.990618e-002, 2.997833e-002, 1.341263e-002, 3.721176e-002, -3.996921e-002, -2.111493e-002, 1.247287e-001, 1.377776e-002, -6.408693e-002, 6.016072e-003, 6.166207e-002, 8.612234e-002, 1.038115e-001, 1.031202e-001, 6.681654e-002, 2.737525e-002, 2.469136e-004, 1.061233e-002, 5.024240e-003, -2.548393e-002, -8.388251e-003, -9.348341e-002, -6.122988e-002, 1.600704e-002, 3.837111e-002, -1.546284e-002, -5.530094e-002, 1.850931e-002, 1.638262e-002, -4.789651e-002, 6.458624e-002, 4.797572e-002, -3.771029e-002, -6.380776e-003, 3.032099e-002, 5.825589e-002, 6.154104e-002, 3.009341e-002, 2.272806e-003, -1.014981e-002, -1.777794e-002, 8.567007e-003, 2.693505e-002, -3.400718e-002, -1.508977e-002, -1.996536e-002, 2.085252e-002, -2.485768e-003, 1.448079e-002, -2.199779e-002, -1.081371e-001, -4.107463e-002, 2.563509e-003, -1.284521e-002, -8.570320e-003, -3.179917e-002, -5.846623e-002, -1.858805e-002, -7.384549e-003, -1.653755e-002, -2.741482e-002, -5.376305e-002, -4.942850e-002, -2.723066e-002, -1.886721e-002, 1.845985e-002, 4.550759e-002, -3.686836e-003, 1.923440e-002, 8.670784e-002, 6.404294e-002, 1.740001e-002, 5.855275e-002, 7.156165e-002, 3.028996e-002, 3.038518e-002, -9.931496e-003, -3.624358e-002, -1.488293e-002, -2.347280e-002, -2.637624e-002, 4.066993e-005, 2.184590e-002, -9.705645e-003, -4.785345e-002, -6.976391e-002, -4.393186e-002, -1.457432e-002, 3.842546e-003, 3.120364e-002, 1.785572e-002, 1.748594e-002, 1.990867e-002, 5.935930e-002, -2.185527e-002, -1.987767e-002, 2.233462e-002, 1.514712e-002, 1.132297e-002, 2.309381e-002, -1.608557e-002, -3.490627e-002, 1.413634e-003, 6.278867e-003, 1.372814e-003, 1.041783e-002, 4.344789e-002, 3.567075e-002, -3.252235e-002, -6.163725e-002, -1.450330e-002, 1.195046e-002, 2.872348e-002, -6.742956e-004, -1.959479e-002, 2.123154e-003, 1.632621e-003, -2.806390e-002, -6.462020e-002, -3.989959e-002, 6.450130e-003, 1.399477e-003, -1.866892e-002, 5.042769e-004, -5.418836e-003, 4.980153e-003, 2.100314e-002, 1.934766e-002, 1.069047e-002, 6.803045e-003, 2.939109e-002, 3.997055e-002, -1.030119e-002, -3.468290e-002, 1.354888e-002, 2.407967e-002, 2.810718e-002, -2.407423e-002, -5.898135e-002, -5.027080e-002, -3.291103e-002},
{-6.825498e-002, -5.089324e-002, -1.568593e-002, 1.857040e-002, 5.067645e-002, 5.458409e-002, 3.281674e-002, 9.321298e-003, -1.843266e-002, -3.223523e-002, -3.793605e-002, -4.440619e-002, -5.891679e-002, -8.229259e-002, -8.457093e-002, -6.901053e-002, -3.889117e-002, -1.933041e-002, -3.927340e-002, -3.315077e-002, 3.115184e-003, -1.537222e-002, -7.160177e-003, -4.628567e-003, 1.290911e-002, 1.094064e-002, 1.434258e-002, 2.564167e-002, 4.229501e-002, 4.429640e-002, 2.105854e-002, -5.298756e-003, -2.217671e-002, -6.673958e-003, 2.877216e-002, 5.205008e-002, 5.766656e-002, 5.920690e-002, 4.994334e-002, 3.947447e-002, 6.282948e-002, 9.628250e-002, 6.715608e-002, -2.027270e-003, 1.702320e-002, -1.890365e-003, -1.938582e-002, -7.442577e-004, -9.097227e-003, -1.186455e-002, -2.420024e-002, -1.248169e-002, -4.100991e-003, 2.183149e-003, -1.479938e-002, -3.053736e-002, -3.981934e-002, -7.422456e-003, 2.208097e-002, 1.584893e-002, 1.501833e-002, 2.801554e-002, 2.382513e-002, -1.165995e-002, -2.851064e-002, 3.099551e-002, 8.561685e-002, 3.062560e-002, 2.348198e-002, 2.248284e-002, -1.784019e-002, 2.251365e-002, 5.367270e-002, 1.708516e-002, -4.340073e-002, -5.504919e-002, -3.438200e-002, -1.287238e-002, -3.851708e-003, -2.079601e-004, -5.201415e-003, 7.654716e-003, -1.443451e-002, -3.074715e-002, 1.902090e-003, 5.589948e-002, 7.091253e-002, -4.924021e-003, -9.560690e-002, -1.214505e-001, -5.174952e-002, -4.197448e-003, 1.119863e-002, 4.031256e-002, -2.108679e-002, 5.831370e-002, 1.111636e-002, -8.295380e-003, -3.337719e-002, -5.074275e-002, -2.712462e-002, -3.033135e-002, -1.945917e-002, 1.738790e-002, 3.869933e-002, 6.602825e-003, -3.291738e-002, -2.469566e-002, 2.265660e-002, 7.499497e-002, 8.218763e-002, 2.251475e-002, -4.384646e-002, -7.607783e-002, -6.448470e-002, -2.139531e-002, -1.425919e-002, 5.352168e-002, -1.465412e-002, 7.411615e-002, 1.071158e-002, -4.798814e-002, -6.907962e-002, -8.566957e-003, -1.606583e-002, -7.591837e-002, -5.162347e-002, 1.667402e-002, 5.035945e-002, 1.456100e-002, 2.991577e-002, 6.353994e-002, 9.024446e-002, 8.256514e-002, 2.946814e-002, -1.860722e-002, -1.566593e-002, 1.346384e-002, 2.391885e-002, 2.602282e-002, -9.391112e-003, 3.700622e-002, -2.447770e-002, 8.044660e-002,


© ISO/IEC 2004 — All rights reserved

--`,,```,,,,````-`-`,,`,,`,`,,`---

Copyright International Organization for Standardization
Provided by IHS under license with ISO
No reproduction or networking permitted without license from IHS
Not for Resale

4.963407e-002, 2.491827e-003, -3.695318e-002, 5.736236e-002, 5.594362e-002, 6.250955e-002, 1.029253e-001, 8.475864e-002, 1.953623e-002, -3.352788e-002, -4.635479e-003, 3.357867e-002, 1.143233e-002, -3.302337e-003, -5.082155e-002, -1.151722e-001, -9.208314e-002, -2.922662e-002, 1.554225e-002, 4.225459e-002, 3.182992e-002, 2.346351e-002, -4.348403e-002, 3.268483e-002, -5.309460e-002, -3.567313e-002, -2.836339e-002, 6.779271e-002, 2.891060e-003, 1.999944e-002, 3.926449e-002, -7.174983e-003, -1.125976e-001, -1.398115e-001, -7.892479e-002, -4.437249e-002, -1.360396e-001, -7.512415e-002, 5.568509e-002, 4.576817e-002, 4.181603e-002, 2.363624e-002, 4.285553e-004, -1.095022e-002, 3.326253e-002, -3.598058e-004, -2.210206e-002, -1.249585e-002, 1.021674e-001, 8.496765e-002, 2.447103e-002, 7.049814e-002, -6.124427e-002, -5.180303e-002, -4.407253e-002, -2.530910e-002, -5.503398e-002, -4.529734e-002, 3.782958e-003, 1.263904e-001, -8.041314e-002, -1.001555e-001, 4.271963e-002, -8.012016e-002, -6.959794e-002, -6.141227e-003, -1.728661e-002, -3.799415e-002, 3.020172e-002, -1.289206e-002, -5.553053e-004, -4.869670e-003, 2.523487e-002, -6.872332e-003, -2.028127e-004, 5.450463e-003, -2.837933e-002, -2.836374e-002, -4.502555e-002, 7.509429e-003, 1.461196e-002, 1.739517e-002, 7.459594e-003, 9.270146e-002, 8.025167e-002, 3.682562e-002, 6.405130e-002, 4.496215e-002, 2.518133e-003, -3.722314e-003, 2.615500e-003, -2.417795e-002, 1.193665e-002, -3.058412e-003, 9.999666e-003, 4.296964e-003, -1.367004e-001, -1.195638e-001, -3.887120e-002, -2.136901e-002, 1.712766e-002, -3.323053e-002, -5.971258e-002, 8.605036e-003, 3.408392e-002, 5.010507e-002, -1.673079e-002, -1.978504e-002, -8.513413e-003, 4.601998e-003, 1.289343e-002, 1.591118e-002, 3.231223e-002, 5.070644e-002, 3.171542e-002, -2.230686e-002, -3.273217e-003, -1.445749e-002, -2.058979e-002, -3.238360e-002, -8.865365e-002, -1.751518e-002, 3.563626e-002, -3.870992e-004, 3.474020e-002, -4.061772e-002, -5.051029e-002, 6.321038e-003, 1.737470e-002, 5.128762e-002, 7.835797e-002, -2.726929e-003, -3.297105e-002, -4.701743e-002, -6.551308e-002, -5.200304e-002, -1.021745e-003, 4.715629e-002, 4.006876e-002, -2.880380e-002, -2.945502e-002, -3.099971e-002, -3.180191e-002, -5.666819e-002, 7.758732e-002, 1.062294e-001, -6.923947e-003, 1.253559e-002, 4.160563e-002, -1.696592e-002, -1.918287e-002, 2.974423e-002, 3.791054e-003, -4.759114e-002, 3.696181e-002, 8.933041e-002, 5.007276e-002, 1.550590e-002, -7.416671e-003, -9.402262e-003, 1.364592e-002, 5.313735e-002, 3.634666e-002, -4.553414e-002, -3.254685e-002, -2.793714e-002, -1.800806e-002, -4.510645e-002, 8.474644e-002, -3.218175e-002, -6.874020e-002, 5.223086e-002, 6.251009e-002, 1.676481e-002, 2.928233e-003, 3.201793e-002, 1.611209e-002, -6.965374e-002, -9.827752e-002, -1.387327e-002, 5.859912e-002, 6.616852e-002, 4.764005e-002, 2.945419e-002, 1.589522e-002, 1.418867e-002, -5.848750e-003, -3.577099e-002, -2.095441e-002, -1.950040e-002, -6.569987e-003, -3.259544e-002, -3.574116e-002, -6.857776e-002, 2.921617e-003, 6.227267e-002, 5.138187e-002, 2.188808e-002, -9.055075e-003, -6.962825e-003, -1.348414e-003, -4.397798e-002, -7.160207e-002, -7.448924e-002, -6.625161e-002, -6.745757e-002, -7.077179e-002, -7.217401e-002, -7.251726e-002, -2.795057e-002, 1.198621e-002, 1.034824e-002, 2.279054e-002, -1.842492e-002, 3.265179e-002, 1.936801e-002, 3.738993e-003, 2.593823e-002, -3.524095e-003, -5.851928e-002, -4.613864e-002, 8.920369e-003, 9.156671e-003, -2.511679e-002, -3.949738e-002, -4.292120e-002, 3.536266e-003, 3.839128e-002, -1.642354e-003, -4.434076e-002, -7.201923e-002, -6.606703e-002, -2.963001e-002, 3.434666e-002, 5.742681e-002, 2.939015e-002, 3.648607e-002, -1.203323e-002, 4.316950e-002, 4.784368e-002, 5.798294e-002, 7.328629e-002, -1.101660e-002, -5.406959e-002, -2.800800e-002, 1.034953e-002, 5.973092e-002, 6.092215e-002, 6.191842e-002, 4.373002e-002, 2.994628e-002, 9.462556e-002, 8.834817e-002, 1.484635e-002, -2.766686e-002, -2.524603e-002, 9.925466e-003, 5.621085e-002, 5.829569e-002, 2.099111e-002, 3.880445e-002, 3.269905e-003, 2.676245e-002, 4.121187e-002, 2.202613e-002, 4.120489e-002, -4.290455e-003, -2.770711e-003, -3.976488e-002, -7.244902e-002, 1.362189e-002, 7.134447e-002, 1.059305e-001, 8.166372e-002, -1.751671e-002, 9.970817e-003, 7.787954e-002, 4.870486e-002, -1.052313e-002, -2.629334e-002, -3.427844e-003, 2.394751e-002, 1.772008e-002, -6.951707e-003, 1.785434e-002, -3.476614e-004, -1.133492e-003, 1.184120e-003, -2.013381e-002, 7.732910e-003, 8.733406e-003, 7.569323e-002, 1.402530e-002, -9.872357e-002, -3.878547e-002, 5.569328e-002, 1.206353e-001, 5.188476e-002, -7.375273e-002, -8.473358e-002, -2.598004e-003, 5.351092e-002, 1.081299e-002, -1.990100e-002, -1.477124e-002, -1.364608e-003, -1.754354e-002, -2.868647e-002, -1.426361e-002, 4.245287e-003, -2.634685e-002, -4.334433e-002, 7.788626e-003, 5.221003e-003, -2.284882e-002, 9.595379e-003, -5.167064e-003, -6.205426e-002, -6.887963e-002, -5.136448e-002, 9.536083e-003, 2.149716e-002, -2.021094e-002, -5.297457e-002, -2.995331e-002, 2.357954e-002, 3.075525e-002, -2.606048e-003, -2.368316e-002, -2.865457e-002, -4.113144e-002, -2.873226e-002, -1.393921e-002, 3.349607e-002, -3.487961e-002, -2.171473e-002, 3.975217e-002, 1.131823e-002, -1.512095e-002, 2.116767e-002, 5.903346e-002, 5.305611e-002, 1.807097e-002, -1.886597e-002, -1.634114e-002, -1.068784e-002, 8.394447e-003, 2.266761e-002, 7.086188e-003, 7.232391e-003, 2.566456e-002, 1.323678e-002, -2.536239e-002, -4.752496e-002, -5.040655e-002, -3.251613e-002, -1.300699e-002, 4.709489e-002, -2.122838e-002, 2.499956e-002},
{9.591862e-002, 2.886426e-002, -3.447222e-002, -6.958015e-002, -5.621976e-002, -5.080367e-002, -4.388154e-002, -2.571133e-002, -8.804500e-003, -2.116759e-002, -2.218067e-002, -1.387209e-002, -4.875801e-003, 4.342716e-003, 1.245597e-002, 2.973458e-002, 5.983719e-002, 7.409178e-002, 8.485498e-002, 3.744309e-002, -1.491431e-002, 8.682478e-003, 3.989732e-003, 2.501173e-002,

© ISO/IEC 2004 — All rights reserved


Copyright International Organization for Standardization
Provided by IHS under license with ISO
No reproduction or networking permitted without license from IHS
Not for Resale

8.336190e-002, 2.397272e-002, -3.090466e-002, -4.808727e-002, -2.469393e-002, -1.063554e-002, -1.441065e-002, 2.067083e-002, 4.656587e-002, 1.837445e-002, -2.958986e-002, -3.340239e-002, -2.057799e-002, -1.092902e-002, -2.469740e-002, -3.553702e-002, -3.662519e-002, -1.636475e-002, 2.456149e-002, 1.404819e-002, -1.980295e-002, 1.481601e-002, 4.268117e-004, -4.323428e-003, -1.590536e-002, -5.242961e-002, -6.408651e-002, -2.386697e-002, 2.219501e-002, 3.715350e-002, 2.861983e-002, 7.850523e-002, 1.127083e-001, 4.570555e-002, -4.115993e-002, -3.526352e-002, 4.952594e-002, 1.175690e-001, 1.258521e-001, 6.565261e-002, -3.154159e-002, -1.089533e-001, -6.357490e-002, -2.440626e-002, -2.784494e-002, 9.735579e-003, 7.658816e-003, -3.099809e-002, -2.913252e-002, -7.925343e-002, -8.614604e-002, -2.110730e-002, 2.904490e-002, 4.213001e-003, -1.715134e-002, 4.872047e-002, 1.046630e-001, -1.159662e-002, -1.254319e-001, -1.002198e-001, -5.289483e-003, 9.245919e-002, 1.204023e-001, 9.302611e-002, 1.387225e-002, -1.001469e-001, -9.553605e-002, -1.049731e-002, -2.279749e-003, 6.667726e-003, 2.468965e-003, -4.655263e-002, 2.964351e-002, 1.657794e-002, 1.840498e-002, 7.939109e-002, 8.438962e-002, -5.960937e-002, -1.275861e-001, -1.078037e-002, 1.014337e-001, 1.692770e-002, -4.395762e-002, -3.821593e-002, -1.405471e-002, 3.019178e-003, -7.785467e-003, 1.211963e-002, 3.449415e-002, -1.672599e-002, -7.854280e-002, 2.474307e-003, 5.629235e-002, 2.324029e-002, 7.213200e-003, -3.153260e-002, 2.357541e-002, -1.338289e-002, -2.916421e-002, 8.057838e-002, 1.205089e-001, -8.215096e-002, -1.652195e-001, -1.102014e-002, 1.351084e-001, 8.744123e-002, 5.709587e-003, -5.953774e-003, -8.413436e-003, -3.147701e-002, -5.622209e-002, -4.394213e-002, 3.361627e-002, 9.868618e-002, 4.349561e-002, 7.701269e-004, 3.439419e-002, 8.617705e-003, 2.495444e-002, -2.297039e-002, 1.445841e-001, 5.519941e-002, -5.788801e-002, -3.192640e-002, 4.494353e-002, -3.299994e-002, -6.002096e-002, 3.833927e-002, 5.039320e-002, -1.565910e-002, -2.337837e-002, -5.119751e-003, 1.757171e-002, 2.884106e-002, 6.707199e-004, -6.022998e-002, -8.171578e-002, -5.062196e-004, 6.156150e-002, -1.908979e-003, -3.272530e-002, -5.675449e-002, 1.391442e-002, -7.213226e-003, -1.580184e-002, -1.180181e-003, -1.754094e-002, -3.552148e-002, -5.527628e-002, -1.255039e-002, 1.907008e-002, 6.115736e-002, -7.487020e-002, -6.361558e-002, -1.732416e-002, -3.851201e-002, -9.038243e-002, 2.683681e-003, 4.347710e-002, 8.554909e-002, -1.108517e-002, -8.609824e-003, 1.512508e-002, -1.662631e-002, -6.301192e-002, -8.472371e-002, -2.218035e-002, -5.806900e-003, 2.355298e-002, -3.122972e-002, -1.967963e-002, 1.857595e-002, -6.066253e-002, 4.019942e-004, 2.443800e-002, 3.152772e-002, -2.012869e-002, -6.881983e-002, -2.935269e-002, 7.290999e-002, -9.921158e-003, -7.361494e-002, -4.083359e-002, 5.944339e-002, 7.625516e-002, 6.685625e-002, 3.835445e-002, 5.005231e-004, -4.901817e-002, -2.962030e-002, 2.143786e-003, 1.100305e-002, 6.606853e-002, 8.883152e-003, -1.629303e-002, 2.892243e-002, -1.591699e-002, 8.461694e-003, 1.128847e-002, 1.076308e-002, -1.446368e-002, -4.344930e-002, -2.238044e-002, 7.637559e-002, 7.400653e-002, -4.316266e-002, -6.503801e-002, -4.019770e-002, -1.762301e-002, 3.517715e-002, 3.400521e-002, 1.278423e-003, -1.266308e-002, 2.653155e-002, 1.991079e-002, 2.835867e-002, 1.707275e-002, -2.304784e-002, -1.799038e-002, -3.433442e-003, 1.562942e-002, 2.279950e-002, 5.787444e-003, -6.526457e-003, -3.430871e-002, -1.268068e-002, -5.110404e-002, 2.122913e-002, 6.941478e-002, 5.541995e-002, 1.769663e-002, 2.862402e-003, -5.675771e-003, 2.072341e-002, 1.543383e-002, 7.435791e-003, 3.871494e-002, 4.834870e-002, 5.320328e-003, 3.022015e-002, 1.151903e-003, -6.590151e-003, -1.021745e-003, -1.730607e-002, 1.318015e-002, 3.062450e-002, 1.118409e-002, -1.061809e-002, -3.926605e-002, 5.133774e-002, -2.395568e-002, -4.237240e-002, -5.790198e-003, -1.485817e-004, -2.627269e-002, -4.061081e-002, -4.165308e-002, -1.720771e-002, -3.155178e-002, -3.912017e-002, 4.807799e-002, 3.635181e-002, -8.047024e-003, 1.302640e-002, 4.310356e-002, 5.337802e-002, 5.403229e-003, -1.731960e-002, 3.033232e-002, 3.929675e-002, 2.391071e-002, 8.694003e-003, -3.597100e-002, 3.399558e-002, 4.596870e-002, -2.426581e-002, -4.897392e-002, -4.079083e-002, -5.238661e-002, -7.271263e-002, -6.677042e-002, -5.587064e-002, -7.108492e-002, -4.123040e-002, 2.528455e-002, 5.203803e-003, -5.318454e-003, -5.895856e-003, 8.821470e-002, 4.678116e-002, -2.341897e-002, 6.102985e-003, 4.876726e-002, 3.050421e-002, 1.663754e-002, 1.205824e-002, -2.981068e-002, -5.757732e-002, 1.453623e-002, 5.420801e-002, 2.625229e-002, -8.576206e-003, -2.626893e-002, -3.435771e-002, -3.620206e-002, -2.815817e-002, -3.969478e-002, -1.785376e-002, 1.071081e-003, -1.038252e-002, -2.114644e-002, -2.634356e-002, 3.712986e-002, -3.196585e-002, 2.422695e-003, 4.589884e-002, 9.904148e-003, -3.356873e-002, -1.091263e-002, -1.648458e-003, -2.570983e-002, -5.843822e-002, -1.091137e-001, -1.236303e-002, 6.201225e-002, 6.635368e-002, 5.826160e-002, 4.361711e-002, 2.881074e-002, 2.648697e-002, 2.258749e-002, -1.068896e-002, -9.602249e-003, 1.464545e-003, -3.004312e-002, -1.311173e-002, -9.339029e-003, -1.273958e-002, 4.642781e-002, 7.088328e-002, -3.002828e-002, -6.233690e-002, -1.742313e-003, -8.185158e-003, -4.565182e-002, 5.102804e-002, -3.398626e-002, -3.893385e-002, -7.880910e-004, 2.387887e-002, 4.171118e-002, 4.664511e-002, 6.013798e-002, 5.929542e-002, 3.400657e-002, -6.042835e-003, -1.448713e-002, 2.285297e-002, -4.997721e-003, 2.887306e-002, -1.220079e-003, -2.650769e-002, -1.235766e-002, 3.244538e-002, -1.556679e-002, -4.956977e-002, -1.378584e-002, -1.512613e-002, -5.508960e-002, 1.354809e-001, 5.704998e-002, 3.153657e-004, 9.345568e-003, -5.750431e-003, 1.474350e-004, 2.041935e-002, 4.025163e-002, 4.800316e-002, 2.695799e-002, -6.350905e-003, -9.774402e-003, 5.329125e-002, 1.987662e-002, 5.131028e-002,


© ISO/IEC 2004 — All rights reserved

Copyright International Organization for Standardization
Provided by IHS under license with ISO
No reproduction or networking permitted without license from IHS
Not for Resale

1.784944e-002, -2.888685e-002, -8.916313e-002, -1.980338e-002, -3.849332e-002, -1.125946e-001, -1.935646e-002, 6.991491e-002, 4.341689e-002, 7.610546e-002, 2.364028e-002, -4.634588e-003, 4.556932e-002, 2.204966e-003, -3.536518e-002, -2.961176e-002, -1.142866e-002, 2.880823e-003, 9.589862e-003, -5.260343e-003, -6.720054e-004, 5.598946e-002, -3.135442e-003, 1.108097e-002, 6.860936e-002, 1.258124e-002, -8.231555e-002, -6.456768e-002, -2.451561e-002, -7.617441e-003, 4.824824e-002, 6.767949e-002, -3.015281e-002, -5.001578e-002, -3.087145e-002, -2.718572e-002, 3.260979e-002, 4.463145e-002, -2.228752e-002, -5.216713e-002, -4.847639e-002, -2.198385e-002, 1.663056e-003, -3.247054e-004, -7.972230e-003, -4.503365e-003, -9.078216e-002, -6.113084e-002, 6.238758e-002, -9.674851e-004, -5.271364e-002, -1.234030e-003, 6.524483e-002, 2.249935e-002, -1.719232e-002, -2.434950e-003, -2.517554e-002, 7.907306e-003, 3.653801e-003, -4.923531e-002, -1.614670e-002, 5.514204e-002, 2.146782e-002, -3.309649e-002, -5.397459e-002, -1.922835e-002, 1.435495e-002, 7.434410e-003, -2.398787e-002, -3.692158e-002, -5.699098e-002, -2.627350e-002, -1.350456e-003, -5.327725e-002, -6.385706e-002, -6.348655e-003, 4.346200e-002, 1.853508e-002, 1.205792e-002, 4.538006e-002, 1.710838e-002, 5.208403e-003, -1.591338e-002, -5.467608e-002, -3.967800e-002, 2.970222e-002, 5.407822e-002, 1.221366e-002, -2.406078e-002, 3.047916e-003, 2.132356e-002, 6.035936e-003, -2.657043e-002, 1.708955e-002, 8.220541e-002, 6.951973e-002},
{7.175828e-002, 9.523715e-002, 6.908460e-002, -4.262243e-003, -6.870402e-002, -9.416817e-002, -8.561379e-002, -4.033135e-002, 4.353467e-002, 1.048916e-001, 9.985069e-002, 6.659966e-002, 4.225710e-002, 3.609463e-002, 2.811693e-002, 1.147922e-002, 2.319242e-002, 3.887293e-002, 2.333318e-002, -1.288823e-002, -2.509065e-002, 2.523426e-003, -2.870937e-002, -6.499039e-002, -1.024481e-001, -1.417504e-002, 4.262684e-002, 2.737379e-002, -2.695981e-002, -7.344229e-002, -7.635209e-002, -3.813702e-002, 1.550634e-002, 4.278997e-002, -1.454782e-002, -9.846209e-002, -1.162727e-001, -8.198984e-002, -3.141928e-002, -7.206572e-003, -4.337681e-005, 1.445359e-002, -3.305520e-003, -1.974888e-002, -3.300478e-002, 4.061115e-004, 2.175318e-003, -1.038926e-002, -1.212498e-001, -7.193370e-002, 5.624551e-003, 5.295593e-002, 3.546945e-002, -1.596167e-002, -3.434137e-002, -1.919606e-002, -1.135041e-003, 2.732736e-003, -4.681513e-002, -7.911867e-002, -2.491503e-002, 5.229556e-002, 1.061364e-001, 1.089516e-001, 6.857514e-002, 2.190269e-002, -2.637641e-002, -4.677863e-002, -2.860132e-002, -1.116613e-002, 2.191343e-003, 3.309665e-002, 5.775437e-002, 3.885517e-002, 3.476518e-002, 4.895090e-002, 3.746396e-002, 2.262300e-002, 6.771569e-003, 1.209271e-002, 2.891163e-002, 4.594560e-002, 2.491388e-002, 1.009231e-002, -1.383021e-004, -5.315031e-003, 6.071783e-003, -1.516255e-003, -5.844760e-002, -7.419873e-002, -2.556160e-002, -1.299713e-002, 3.783546e-003, 5.002290e-003, -6.784996e-003, 3.318192e-002, 1.580864e-002, 8.426471e-003, 5.486691e-003, -2.052501e-002, -3.024180e-002, -8.076860e-003, 2.705354e-003, 1.495956e-002, 4.468547e-002, 6.462140e-002, 2.484890e-002, -3.264808e-003, 9.190732e-003, 5.348573e-002, 7.174620e-002, 3.527708e-002, -3.939976e-002, -7.325185e-002, -4.094916e-002, 1.375741e-002, 5.822333e-002, 5.547680e-002, -2.398473e-003, 2.247381e-003, -8.830060e-002, -5.267240e-002, -1.592568e-002, -1.967904e-002, -3.729117e-002, 1.021778e-002, 4.389245e-002, 3.870386e-003, -1.529154e-002, 3.073718e-003, -1.101222e-002, -3.488190e-003, 2.311364e-002, 5.255902e-002, 7.276770e-002, 2.440365e-002, -6.560856e-002, -1.003559e-001, -7.856343e-003, 1.277866e-002, 3.110220e-002, 6.800363e-002, 2.504958e-002, -2.150452e-003, -1.940201e-002, -4.088798e-002, -1.577481e-002, 5.043005e-002, 4.526128e-002, 5.137683e-002, 9.838301e-003, -4.546228e-002, -4.966957e-002, -3.155965e-002, -7.361333e-002, -4.961896e-002, -2.027503e-002, -1.094233e-002, 6.115099e-002, 9.051003e-002, 2.105027e-002, -4.177093e-002, -2.490744e-003, 8.111160e-003, -4.532492e-002, -1.311974e-002, 1.258294e-002, 3.772945e-002, 1.114386e-002, 3.193050e-002, -2.059687e-002, 2.404549e-002, -2.361292e-002, -3.636857e-002, -1.182100e-001, -1.169246e-001, -3.493564e-002, 3.439854e-002, 7.170355e-003, 3.949052e-002, 3.492505e-002, -8.510722e-002, 2.357415e-002, 6.805798e-002, 1.036835e-001, 3.092343e-002, 7.331153e-003, 2.567377e-002, -5.382076e-002, -8.621686e-002, -1.411815e-002, 6.773874e-002, -5.058238e-002, -7.892562e-003, -6.418191e-002, -3.611879e-002, -1.973032e-002, 5.147411e-002, -2.012670e-002, -4.566944e-004, 2.800402e-002, 5.475321e-002, -3.599391e-002, -5.317740e-002, 4.793894e-002, -4.651463e-002, 7.803054e-003, 2.419360e-002, 4.351464e-002, -3.559995e-002, -7.107392e-002, -6.171046e-003, -8.044204e-003, -5.381254e-002, -5.814554e-002, -9.093506e-003, -4.342965e-002, -3.487534e-002, -4.548729e-002, -1.784041e-002, 5.051026e-002, 8.772245e-002, 2.938553e-003, 5.253015e-002, 2.446017e-002, 1.587625e-002, -4.921509e-002, -9.711385e-002, -3.468516e-002, 9.198332e-002, 1.345648e-001, 5.234243e-002, -2.273340e-002, -1.576553e-002, -2.827526e-002, -3.132411e-003, 4.431421e-002, 5.037717e-002, -4.415716e-002, -7.704230e-002, 7.469214e-003, 8.411267e-003, -2.127087e-002, -6.909482e-003, 7.301198e-002, 2.093472e-002, -3.675154e-002, 3.991071e-002, 6.419174e-003, 3.935000e-002, 4.847806e-002, -1.973222e-002, -3.319744e-002, -1.078642e-002, -1.440541e-002, -6.005522e-002, -6.603115e-002, -1.584947e-002, -2.283920e-002, -4.557450e-002, 6.220237e-003, 6.204866e-002, -1.111405e-002, -3.180182e-002, 3.858939e-002, 8.157204e-003, -4.220691e-002, -1.227676e-003, 3.143368e-002, -5.112734e-002, -7.380207e-002, 2.398071e-002, 1.918015e-002, -3.172796e-004, 8.462992e-002, 4.609993e-002, 2.124622e-002, 2.611683e-002, 1.174336e-002, -2.263893e-002, -1.382409e-002, 4.277635e-002, 1.909345e-002, -5.837173e-002, -5.222788e-002, 2.482962e-002, 2.929570e-002, 4.875722e-002,

© ISO/IEC 2004 — All rights reserved


Copyright International Organization for Standardization
Provided by IHS under license with ISO
No reproduction or networking permitted without license from IHS
Not for Resale

1.753003e-002, -2.507408e-002, -3.035605e-002, 1.339332e-002, -2.148170e-002, -7.065119e-002, -5.954604e-002, 3.325231e-002, 4.382310e-002, -3.514449e-003, 2.328242e-002, 4.490662e-002, 2.276772e-002, 4.493850e-003, -1.329832e-002, -2.370361e-002, -7.172418e-003, 5.116829e-002, 4.288203e-002, -3.421579e-002, -6.407902e-002, -1.632398e-002, 4.558881e-002, 5.585514e-002, -1.395257e-002, 1.154526e-002, 2.306485e-002, -1.522450e-003, -2.267620e-002, -4.035528e-002, -3.000402e-002, 4.905237e-002, 7.043475e-002, 4.652767e-003, 4.635837e-003, 2.893354e-002, -6.254984e-003, -6.193309e-002, -9.492024e-002, -1.014629e-001, -6.539208e-002, 3.010523e-002, 6.780406e-002, 1.215417e-002, -3.159299e-002, -4.480117e-002, 1.788183e-002, -8.037359e-003, 9.452402e-002, 7.483191e-002, -1.690289e-002, -9.382278e-003, 1.495431e-002, 1.983737e-002, -2.065314e-002, 7.175368e-003, 1.901449e-002, -3.830980e-002, -4.349283e-002, 6.701148e-002, 7.711058e-002, 1.456730e-002, -4.298615e-002, -5.923496e-002, -1.741362e-002, 6.682127e-002, 1.057414e-001, 5.680453e-002, 3.649076e-003, -5.124740e-002, 9.444223e-003, -5.026987e-002, 7.255978e-002, -2.889088e-002, -3.966288e-002, 4.033743e-003, 6.332570e-003, 3.112418e-002, -1.335417e-002, -5.742883e-002, -7.615720e-002, -6.201941e-002, -1.042713e-001, -2.027071e-002, 6.662230e-002, 6.393240e-002, 2.844151e-002, -7.126211e-003, 1.790370e-002, 7.389888e-002, 9.761613e-002, 6.450946e-002, 2.629047e-002, -4.747104e-002, 1.476183e-002, -2.177724e-002, -2.120831e-002, -7.290208e-002, 2.419426e-002, 3.794848e-002, -1.950385e-002, 3.372464e-002, 5.342366e-002, 3.885818e-002, 2.353085e-003, 3.074490e-002, 4.776965e-003, -6.327005e-002, -1.933591e-002, -9.329646e-003, -3.491811e-002, -6.109457e-002, -3.610102e-002, 1.843943e-002, 4.740813e-002, 4.481043e-002, 2.406050e-002, -2.727547e-002, 2.267397e-002, 2.339534e-002, -3.638846e-002, -3.340703e-002, 3.176395e-002, -7.738686e-003, -2.446058e-002, 2.859488e-002, 3.792570e-002, 5.616709e-002, 2.196201e-003, 2.085850e-002, 6.506891e-002, -6.473111e-003, -5.843236e-003, -1.152921e-003, -5.228769e-002, -8.378407e-002, -6.396132e-002, -2.638389e-002, 1.854022e-003, 2.278034e-002, 7.123537e-003, -3.294344e-002, 2.355571e-003, 2.663571e-002, 2.805295e-002, 5.424619e-002, 7.068963e-002, 2.876884e-002, -4.841145e-002, -5.807608e-002, -5.140826e-002, 3.664537e-002, 1.739739e-003, -4.626402e-002, 1.537705e-002, 1.853690e-002, 3.200955e-002, 5.953741e-002, 4.934972e-003, -4.554181e-002, -5.964828e-002, -4.483614e-002, -3.118389e-002, 7.405027e-003, -5.916952e-003, -3.151351e-002, -1.821742e-002, -1.588796e-004, 6.199585e-002, 3.181189e-002, 7.429968e-003, -2.837630e-002, -5.027638e-002, -8.226967e-004, -6.290282e-003, 5.707929e-003, -3.639595e-004, -9.493806e-003, 1.081590e-002, 1.966962e-002, 1.689045e-002, 7.086492e-002, 7.081798e-002, 1.465017e-002, -3.326326e-002, -5.448368e-002, -5.406784e-002, 1.898110e-003, 6.468216e-003, 4.688619e-003, 1.078959e-002, -3.596585e-002, 3.141316e-003, -5.149093e-002, -5.461991e-002, -4.530884e-002, -6.685228e-003, 6.341620e-002, 3.619642e-002, 2.024443e-002, 2.056856e-003, -2.316003e-002, -2.424512e-002, -1.728322e-002, -2.317568e-002, 1.126330e-002, 7.336187e-002, 5.607519e-002, -6.788437e-003, -6.516489e-002, -7.366957e-002, 5.775025e-003, 3.491977e-002, 7.419188e-002, 5.991229e-002, -4.088499e-002},
{-6.267871e-003, -4.485851e-003, 4.209054e-003, 3.108157e-003, 8.778452e-004, 7.037245e-003, 2.435375e-003, -4.835614e-003, -1.419934e-002, -4.142954e-002, -8.812397e-002, -1.214904e-001, -1.052190e-001, -4.051626e-002, 3.628093e-002, 7.835239e-002, 5.287164e-002, -2.064069e-002, -1.765747e-002, 2.940471e-002, 1.140038e-002, 2.109516e-002, 1.080843e-002, 2.951889e-002, -3.001190e-002, 8.847280e-004, 2.567373e-002, 3.103222e-002, 2.399305e-002, 2.495235e-002, 2.950037e-002, 4.003385e-002, 4.458163e-002, 4.267534e-002, 6.465043e-003, -3.130801e-002, -5.552327e-002, -2.145025e-002, 5.050763e-002, 9.696171e-002, 7.711272e-002, -9.307283e-003, -5.099784e-002, -9.820829e-003, -3.508863e-002, -6.677591e-003, -4.669486e-003, 1.602848e-003, -6.560060e-002, -1.467327e-002, 2.912732e-002, 4.089157e-002, 1.473349e-002, -4.270692e-004, 8.455653e-003, 4.190382e-002, 8.019916e-002, 1.120704e-001, 7.086309e-002, -2.926689e-003, -6.333378e-002, -7.860151e-002, -4.363519e-002, 2.478373e-002, 5.736219e-002, 1.587222e-002, -4.456245e-002, -2.454729e-002, -6.115352e-002, -2.026420e-002, 5.347361e-003, -7.252741e-003, 5.443026e-003, 2.891199e-002, 3.929641e-002, 4.004394e-003, -5.538574e-002, -8.059645e-002, -8.592440e-002, -6.167772e-002, -1.500842e-002, 5.628524e-002, 5.664607e-002, 3.692890e-002, 2.202693e-002, 2.137935e-003, 1.647779e-002, 4.263327e-002, 5.112780e-002, 6.634881e-003, -2.061489e-002, 2.327733e-002, -2.171895e-002, -1.188955e-003, 2.580142e-002, -1.500437e-003, -7.016657e-002, -3.833501e-002, -8.683195e-003, -1.750198e-002, -5.299427e-002, -6.775789e-002, -5.609123e-002, -6.975094e-002, -5.870945e-002, 1.171092e-002, 2.182477e-002, 2.814127e-003, -2.605388e-003, 1.095594e-002, 2.047769e-002, -1.219090e-002, -3.004661e-002, -5.041927e-002, -1.082732e-002, 8.644212e-002, 3.967722e-002, 6.918664e-003, 1.425389e-002, -5.986003e-003, -1.569889e-002, -3.836117e-002, -3.522841e-002, -2.689495e-002, -3.545374e-002, 2.839614e-002, 1.230559e-001, 6.927973e-002, -2.536554e-002, -1.460564e-002, -3.944563e-002, -2.690954e-002, 3.783512e-002, 9.266149e-002, 8.985313e-002, 2.791992e-002, -3.103222e-002, -6.309123e-002, -5.316033e-002, 3.301148e-002, 3.458138e-002, -7.644035e-003, -1.533132e-002, -2.726544e-002, 2.057662e-002, 2.207395e-002, 5.793754e-002, 3.441598e-002, -7.531067e-002, -1.637158e-002, 9.456979e-002, 9.849919e-002, -2.624585e-002, -3.900450e-002, -2.348212e-002, 8.437319e-003, 9.159913e-003, 1.864331e-002, 7.481791e-003, -2.601360e-002, -5.018823e-002, -4.260078e-002, -3.421242e-002, -2.652506e-002, -6.142037e-002, -7.356199e-002, -5.736627e-002, -4.799842e-003, -


© ISO/IEC 2004 — All rights reserved

--`,,```,,,,````-`-`,,`,,`,`,,`---
Copyright International Organization for Standardization
Provided by IHS under license with ISO
No reproduction or networking permitted without license from IHS
Not for Resale

7.630407e-003, -6.105437e-002, 8.513335e-002, 1.488686e-001, -3.086315e-002, -8.076044e-002, -4.073306e-002, 1.922217e-002, -1.212383e-002, 4.507639e-002, 1.426474e-002, 1.607878e-002, -3.189919e-002, -2.417010e-002, 3.516250e-002, 6.614325e-002, -4.682269e-002, -2.368509e-002, -1.965717e-002, -5.472497e-002, -3.038801e-002, -2.108809e-003, 2.523414e-003, 2.975173e-002, 8.622305e-002, -4.001074e-002, -1.710823e-002, 1.368225e-001, 4.629762e-002, -4.020127e-002, -8.571669e-002, -4.362506e-002, 1.937592e-002, 2.773344e-002, -5.477132e-002, 7.554514e-004, 5.375392e-002, -6.815595e-002, -5.208105e-002, 5.169334e-002, 1.937052e-002, 1.168459e-002, -9.289116e-003, -3.428150e-002, 3.976290e-002, 7.918792e-002, 8.219858e-002, 3.873335e-003, 5.946256e-002, -6.801509e-002, -1.292779e-001, 4.149683e-002, 5.661621e-002, -1.546821e-002, -5.431993e-002, -3.613777e-002, 1.103300e-002, 1.705726e-003, -7.896903e-002, -3.965913e-002, 2.733560e-002, 2.494333e-002, -1.478693e-002, -2.499735e-002, -2.562074e-002, 1.236518e-002, -1.759552e-002, -4.044226e-002, -2.559304e-003, -2.115375e-002, -1.396253e-002, -4.135545e-002, 8.806666e-002, -7.851745e-002, -1.682020e-001, 6.656922e-003, 1.800216e-002, 8.770824e-004, -2.542867e-002, -1.077337e-002, -1.507242e-002, 4.183770e-002, -2.694367e-002, -3.019668e-002, 3.658802e-002, 8.159446e-002, 7.700728e-002, 5.620761e-002, 4.393360e-002, 5.852337e-002, 2.165270e-002, -7.219397e-003, 9.370013e-003, -2.718909e-002, -2.988099e-002, -5.084029e-002, 4.678393e-002, -8.374331e-002, -9.705196e-002, -1.621712e-003, -1.090207e-002, 6.209601e-003, -1.991909e-002, -2.347151e-003, -1.362843e-002, 4.153505e-002, 5.272603e-002, -1.482335e-002, -4.452574e-002, -1.201165e-002, 1.221262e-002, 1.945422e-002, 2.638504e-002, 4.516981e-002, 2.388448e-002, 2.736400e-002, 1.333841e-002, 1.324457e-002, -6.361058e-003, -1.859423e-002, 6.268679e-002, 2.347144e-002, 4.310629e-002, -1.264076e-002, -4.841860e-004, 4.486490e-003, -1.010774e-002, -9.171269e-004, 1.120075e-002, -9.554158e-003, 7.544447e-002, 4.588795e-002, -3.866908e-002, -8.044511e-002, -7.794939e-002, -5.766607e-002, -2.363112e-002, 1.820203e-002, 1.684605e-002, 1.209197e-002, 1.830669e-002, 1.417252e-002, 2.344407e-003, 3.326452e-003, 1.533992e-001, 1.220772e-001, 3.510886e-002, -1.708908e-002, 1.648446e-002, 2.087946e-002, 4.714975e-003, -1.501677e-002, 7.997955e-003, -4.166795e-002, -4.124849e-003, 7.854479e-002, 2.191362e-002, -4.557663e-002, -7.944240e-002, -7.318775e-002, -2.454241e-002, 1.377123e-002, -1.661151e-002, -1.387409e-004, 2.857442e-002, 2.018024e-003, -1.593926e-002, -1.969864e-003, 1.117747e-001, 1.111302e-002, -4.302742e-003, 2.692962e-002, 2.149296e-002, 3.954772e-002, 1.725057e-002, -2.823553e-002, -3.523543e-003, 1.586329e-002, -3.951773e-002, -1.738025e-002, 3.395346e-002, 2.728595e-002, 4.875142e-003, -5.791552e-003, 1.101454e-002, 1.278484e-002, -1.103994e-002, -7.579711e-004, 1.678745e-002, 3.138069e-003, -2.751958e-002, -1.659139e-002, -4.099172e-002, -6.245021e-002, 3.700670e-002, 1.587356e-002, -4.026495e-003, 6.030514e-002, 4.372801e-002, -1.157113e-002, -2.722648e-002, 2.100079e-002, 2.896598e-002, -4.408125e-002, -5.695028e-002, -2.760317e-002, -1.805912e-002, -9.877404e-003, 3.939833e-003, -8.831313e-003, -2.936931e-002, -4.460691e-003, 1.676114e-002, 2.434746e-002, -3.271568e-003, 9.600585e-004, -3.729043e-002, -8.365391e-003, -8.884069e-004, -3.750284e-002, -2.681862e-002, 2.998039e-002, 1.048890e-002, 2.407754e-002, -2.013073e-002, -7.937065e-002, 3.854329e-003, 4.398416e-002, -3.300483e-002, -3.484372e-002, -1.018684e-002, 1.010844e-002, 1.813941e-002, -1.396911e-002, -3.178800e-002, 1.270723e-002, 3.731165e-002, 6.226169e-002, 4.281772e-002, 4.163303e-002, 2.473695e-002, -1.981781e-002, -8.417232e-002, -6.883103e-002, 2.925204e-003, 1.968963e-002, -1.854738e-002, 2.010314e-002, 4.049168e-002, -9.377928e-002, -3.057239e-002, 7.472073e-002, 1.668204e-002, -2.239720e-002, -1.726950e-003, 2.231654e-002, 2.764875e-002, -1.068793e-002, -2.476278e-002, 2.946394e-002, 2.895418e-002, 7.993287e-002, 5.122223e-002, 5.104187e-002, 2.657396e-002, -3.338209e-002, -7.097280e-002, -8.037279e-002, -3.537000e-002, 6.264512e-002, 8.611133e-002, 2.966586e-002, -1.549649e-002, -3.926097e-002, 3.424154e-002, 5.935714e-002, 3.493743e-002, 4.613847e-003, 1.180936e-002, 2.764380e-002, 2.748003e-002, -1.268199e-002, -1.573555e-002, 2.945678e-002, -1.311199e-002, 5.162311e-002, 1.550532e-002, 2.733722e-002, -3.740923e-002, 4.921697e-003, 5.500728e-002, 5.181428e-002, 2.034045e-002, 2.944418e-002, 6.589870e-002, 3.322884e-002, 2.475454e-002, 8.172866e-002, 8.526853e-002, -4.760209e-004, -2.994433e-002, -8.000365e-003, 2.061179e-002, 3.243181e-002, 1.189767e-002, -1.223169e-002, 4.054344e-003, 3.833734e-003, -7.526220e-002, -1.747535e-002, -3.573839e-002, 2.849034e-002, -6.579042e-002, 5.420396e-003, 5.031420e-002, 2.004166e-002, -7.319430e-002, -1.052830e-001, -7.557343e-002, -7.371249e-002, -1.914067e-002, 5.043793e-002, 3.396500e-002, -4.961687e-002, -8.858041e-002, -5.397889e-002, 1.074457e-002, 3.375557e-002, 7.661244e-003, -5.743811e-003, 6.211232e-003, -3.146794e-002, -1.088900e-001, -7.020440e-002, -7.705556e-002, -7.498058e-003}
};

PCLDA basis matrix $\Psi_4^c$ [40][576]={
{-2.949848e-002, 1.977958e-003, -2.166676e-003, 7.630581e-003, -3.917213e-002, -1.054312e-002, 5.820258e-002, 5.380593e-002, -1.551534e-002, -3.059814e-002, -1.368507e-002, -1.342381e-003, 1.921970e-002, -3.324895e-002, 1.395953e-002, 6.068111e-002, 4.443359e-002, 5.824599e-002, 4.053763e-002, 3.758232e-002, -3.348795e-002, -1.037921e-001, -1.465753e-001, -1.463450e-001, -

© ISO/IEC 2004 — All rights reserved


--`,,```,,,,````-`-`,,`,,`,`,,`---
Copyright International Organization for Standardization
Provided by IHS under license with ISO
No reproduction or networking permitted without license from IHS
Not for Resale

5.108816e-003, 3.757903e-003, -2.573189e-002, -4.674817e-003, -2.111030e-002, 9.611790e-003, 3.349766e-002, -5.865582e-003, -7.113034e-002, -1.073152e-001, -9.684090e-002, -3.680874e-002, 2.509343e-002, -2.575846e-002, 5.489258e-002, 6.096957e-002, 2.791814e-002, 6.184778e-002, 4.911051e-002, 4.390979e-002, 4.686087e-003, -1.070028e-001, -1.610655e-001, -1.462693e-001, 1.567153e-002, 1.304789e-002, -1.314343e-002, 8.232794e-003, 3.702044e-003, 3.182326e-002, 3.779805e-002, -7.748840e-003, -5.657608e-002, -7.148373e-002, -4.708747e-002, 2.121852e-002, 5.468861e-002, 2.690049e-002, 7.162540e-002, 2.517960e-002, -1.743807e-002, 3.355386e-002, 5.650453e-002, 1.743183e-002, 6.046507e-002, -7.457344e-003, -6.235187e-002, -6.324152e-002, 9.772253e-003, 1.876702e-003, 7.951724e-003, 3.157180e-002, 1.853861e-002, 3.130428e-002, 3.687517e-002, 3.127995e-003, -2.346024e-002, -2.250919e-002, 2.110724e-002, 9.508498e-002, 7.654728e-002, 3.974198e-002, 3.520751e-002, -1.758829e-002, -6.358460e-002, -9.416505e-003, 4.870908e-002, -1.444126e-002, 1.660589e-002, 5.626006e-002, 1.993248e-002, 1.791607e-003, -4.058106e-003, -1.235466e-002, 1.659131e-002, 6.656603e-002, 4.930944e-002, 3.331499e-002, 1.911371e-002, -6.236186e-003, -1.297111e-002, 1.533982e-002, 6.884526e-002, 7.873525e-002, 3.000722e-002, -5.654628e-003, -1.332217e-002, -4.641500e-002, -8.381687e-002, -4.704662e-002, 3.152083e-002, -2.123427e-003, -6.225495e-002, 3.601891e-003, 4.672617e-002, 3.575999e-002, -4.924709e-003, -1.237125e-002, 9.084096e-003, 5.445486e-002, 6.018537e-002, 4.258936e-002, 3.004927e-002, 1.915497e-002, 1.413886e-002, 1.724389e-002, 1.407720e-002, 5.191583e-004, -1.720079e-002, -3.143565e-002, -4.435091e-002, -5.526423e-002, -8.241929e-002, -5.500052e-002, -1.026209e-002, -4.946013e-004, -3.031281e-002, -2.790739e-002, -2.855402e-003, 4.596042e-003, 1.081585e-002, 2.652137e-003, 3.277926e-003, 2.151588e-002, 2.351806e-002, 6.224295e-003, -9.467301e-003, -2.102955e-002, -2.241286e-002, -2.452734e-002, -2.645099e-002, 3.645052e-003, 3.507082e-002, 9.518645e-003, -3.015031e-002, -4.136542e-002, -6.019260e-002, -4.078101e-002, -1.240256e-002, 2.786921e-002, 8.608201e-003, 2.837561e-002, 5.861735e-002, 3.946936e-002, 4.043362e-002, 1.498861e-002, 1.790367e-003, -4.410724e-003, -9.922412e-003, -1.563560e-002, -1.976588e-002, -2.258686e-002, -1.760353e-002, -1.327003e-002, -3.722760e-003, 3.492803e-002, 8.546679e-002, 1.322431e-002, -3.047373e-002, -2.187144e-002, -6.441555e-002, -1.053943e-001, -1.027234e-001, 4.405471e-002, 5.436465e-002, 2.711780e-002, 9.854787e-002, 1.095417e-001, 4.110869e-002, 2.318153e-002, 1.056107e-002, -2.254141e-002, -3.113941e-002, -3.257813e-002, -2.981736e-002, -2.003415e-002, 1.862916e-003, 7.873822e-003, -6.284491e-003, -9.024478e-004, 1.421660e-002, -4.389179e-002, -4.874617e-002, -4.566965e-002, -7.429041e-002, -1.025667e-001, -1.182467e-001, -4.702890e-003, 2.881077e-002, -3.824297e-002, 3.189362e-002, 1.057070e-001, 3.195295e-002, 8.874688e-003, 1.589933e-002, -2.664809e-002, -3.804662e-002, -3.446047e-002, -1.552793e-002, 1.770322e-002, 4.463682e-002, 2.004117e-002, -2.803098e-002, -3.261551e-002, -3.932674e-002, -6.421945e-002, -3.920244e-002, -9.283518e-003, -3.549612e-003, 5.180607e-002, -2.710406e-002, -1.150181e-001, -8.797761e-002, -7.807640e-002, -4.756784e-002, 5.210548e-002, 2.942088e-002, -2.849695e-002, 1.360501e-002, -1.302105e-002, -2.409187e-002, -1.344126e-002, 1.116918e-002, 5.590759e-002, 6.259957e-002, 4.425977e-003, -3.354206e-002, -3.330153e-002, -5.911505e-002, -9.844382e-002, -4.968036e-002, -1.045715e-002, -5.227049e-002, 5.850818e-003, -4.195691e-002, -1.395517e-001, -1.313732e-001, -6.472332e-002, -3.857730e-002, 5.366004e-003, 5.266883e-002, -5.134867e-002, -1.171609e-003, 5.849487e-004, 2.032257e-003, 1.030481e-002, 3.523852e-002, 6.482237e-002, 4.568580e-002, -1.725407e-002, -4.337120e-002, -5.288623e-002, -6.522139e-002, -5.756902e-002, -9.299644e-003, -1.319936e-002, -1.131831e-001, -4.044136e-002, -2.965282e-002, -9.867705e-002, -1.115084e-001, -6.280059e-002, -1.007505e-002, 1.636677e-002, 3.562671e-002, -5.735322e-002, -4.508716e-003, 9.404447e-003, 1.372129e-002, 1.969072e-002, 2.823837e-002, 2.788380e-002, 7.879070e-003, -1.644254e-002, -4.095396e-002, -6.496646e-002, -5.789467e-002, -3.438052e-002, -1.602263e-002, -4.180821e-002, -1.238900e-001, -4.434073e-002, -5.948648e-003, -4.525548e-002, -8.094386e-002, -7.991946e-002, -1.249633e-002, 6.239813e-002, 1.690443e-002, -3.721847e-002, 9.273805e-003, 1.439047e-002, 1.269087e-002, 1.935621e-002, 8.391773e-003, -7.877541e-003, 3.718529e-003, 3.086296e-002, 1.955434e-002, -1.257909e-002, -3.560262e-002, -5.150046e-002, -6.270345e-002, -8.978982e-002, -1.151827e-001, -5.104644e-002, 2.015970e-002, 2.055609e-002, -2.148902e-002, -6.406438e-002, -2.021493e-002, 1.052159e-001, 9.511915e-003, -1.611664e-002, 2.612512e-002, 2.586071e-002, 2.738156e-003, 4.986861e-003, -7.140888e-003, -6.202577e-003, 3.847961e-002, 5.327065e-002, -1.629029e-002, -6.691224e-002, -5.842513e-002, -3.992253e-002, -2.863403e-002, -5.142336e-002, -6.002764e-002, -3.110272e-002, 8.457017e-003, 3.459915e-003, -4.165929e-002, -1.068622e-001, -8.503595e-002, 8.129959e-002, 1.682439e-002, -1.146650e-002, 3.355375e-002, 2.224830e-002, -6.715813e-003, -1.289146e-002, -7.113693e-003, 1.507050e-002, 4.414819e-002, 1.101656e-002, -4.393335e-002, -2.115643e-002, 2.165297e-002, 3.074739e-002, 4.651314e-003, -4.723805e-002, -7.505397e-002, -5.407459e-002, -4.633551e-003, 1.478574e-002, -2.008511e-002, -6.849723e-002, -4.478644e-002, 8.325178e-002, 2.094970e-002, -1.397309e-002, 2.333373e-002, 4.129143e-003, -1.128734e-002, -2.124139e-002, -2.116700e-004, 1.025459e-002, -5.119368e-003, -5.153891e-002, -7.481104e-002, -5.115973e-002, -1.574534e-002, -3.743402e-003, -1.574811e-002, -4.197228e-002, -5.110413e-002, -1.290367e-002, 3.324078e-002, 5.070066e-002, 2.107409e-002, -2.582434e-002, -1.557449e-002, 6.377024e-002,


© ISO/IEC 2004 — All rights reserved

Copyright International Organization for Standardization
Provided by IHS under license with ISO
No reproduction or networking permitted without license from IHS
Not for Resale

1.023502e-002, -3.316847e-002, -9.370759e-003, -2.455964e-002, -1.809870e-002, -1.378826e-002, -1.494729e-002, -1.465726e-002, -3.137204e-002, -4.346255e-002, -3.171973e-002, -8.831342e-003, 1.197546e-002, 2.188125e-002, -1.281710e-003, -2.021318e-002, -1.429601e-002, 8.100732e-003, 1.907608e-002, 9.568651e-003, -1.867669e-002, -3.336584e-002, -1.076563e-002, 3.571841e-002, 2.534979e-004, -2.455017e-002, -1.980684e-002, -2.388930e-002, -2.059534e-002, 3.671993e-003, -1.669195e-002, -2.093054e-002, -2.088502e-002, -8.397758e-003, 5.228712e-003, 1.285755e-002, 1.259758e-002, 2.511594e-004, -1.145758e-002, -1.731948e-002, -1.165364e-002, 1.076506e-002, 3.497098e-002, 4.092933e-002, 2.726064e-002, 6.889961e-003, 5.968934e-003, 2.560889e-002, 5.239150e-003, 7.932747e-003, 1.042919e-002, 2.812007e-003, -1.854752e-002, 2.331068e-002, 7.002163e-003, -2.024328e-003, -6.223483e-003, -8.950006e-003, -6.776936e-003, 5.592287e-003, 5.464963e-003, -1.238412e-002, -3.112419e-002, -4.132471e-002, -3.991644e-002, -3.792309e-003, 4.251107e-002, 6.581797e-002, 5.497787e-002, 3.203704e-002, 1.586865e-002, 2.685349e-002, -1.917130e-003, 1.098247e-002, 1.396078e-002, 6.514675e-003, -1.763495e-002, 1.943012e-002, 2.177529e-002, 1.623872e-002, 1.895716e-002, -3.256655e-003, -1.905610e-002, 1.684364e-003, 2.781201e-002, 3.004263e-002, 1.793319e-003, -2.399778e-002, -3.629192e-002, -1.823886e-002, 1.532506e-002, 3.654095e-002, 3.145314e-002, 1.437251e-002, -2.989549e-004, 1.625854e-002, 1.536031e-003, -3.213984e-002, -3.954765e-002, -4.966552e-004, -1.119540e-002, -1.996455e-003, 3.039291e-003, 1.056475e-002, 3.070235e-002, 2.088896e-002, -5.813738e-003, -1.579992e-003, 3.860185e-002, 6.798187e-002, 4.813640e-002, 1.073703e-003, -3.488493e-002, -3.471883e-002, -1.275278e-002, 8.576569e-003, 6.941890e-003, -3.908173e-003, -1.606259e-002, -2.315960e-004, 3.095424e-002, -3.003014e-002, -4.292185e-002, -2.435391e-003, -8.130345e-003, -4.892908e-003, -2.054635e-002, -3.357989e-002, -3.429290e-003, 1.947483e-002, 6.754571e-003, 1.935171e-003, 1.664304e-002, 3.849689e-002, 3.297689e-002, -1.515640e-002, -5.667343e-002, -4.720031e-002, -1.351266e-002, 1.314571e-002, 1.495676e-002, -1.878813e-003, -5.130974e-003, 1.482314e-002, 9.110764e-002, 3.520990e-002, 1.764283e-002, 4.039765e-002, 2.534662e-002, 8.398269e-003, -1.264365e-002, -4.190507e-002, -3.757265e-002, -8.566490e-003, 4.087134e-004, 2.537377e-003, -3.601087e-003, -7.871986e-003, -1.861314e-002, -5.147438e-002, -7.277515e-002, -4.513013e-002, 6.080183e-003, 4.344441e-002, 4.586636e-002, 3.088697e-002, 4.029112e-002, 5.653883e-002},
{-2.860504e-003, -1.071757e-002, 1.593103e-002, -4.264329e-002, 8.740213e-003, 1.398175e-001, 1.570251e-001, 3.161575e-002, -5.135195e-002, -2.618043e-002, 3.923114e-002, 1.117085e-001, 6.161099e-002, -5.989112e-002, -2.739796e-003, -2.448105e-002, -5.497809e-004, 6.923904e-003, -3.876421e-002, -3.733151e-002, 1.328152e-001, 1.385307e-001, -2.353436e-003, -1.321992e-001, 2.644426e-002, -9.309378e-003, 2.787841e-003, -3.754117e-002, -1.595898e-002, 3.695480e-002, 1.299043e-002, -7.250475e-002, -1.122527e-001, -7.303606e-002, 2.289829e-003, 4.540954e-002, -2.211242e-002, -5.781229e-002, 3.429210e-003, -3.327156e-002, -3.089254e-003, 1.285175e-002, -8.873556e-003, -5.129264e-002, 8.801612e-002, 1.110013e-001, -6.881748e-003, -1.322485e-001, 3.821131e-002, 4.630830e-003, -8.463094e-003, -3.484081e-003, -1.304594e-002, -6.638374e-003, -4.055642e-002, -9.724346e-002, -1.049451e-001, -5.146063e-002, 2.197834e-003, -8.231015e-003, -5.441938e-002, -2.504305e-003, -2.154935e-002, -4.556865e-002, -8.774152e-005, 7.283715e-003, 5.949494e-005, -4.258742e-002, 3.455296e-003, 5.456708e-002, -4.704518e-003, -1.032690e-001, 2.149461e-002, 1.363943e-002, -9.441623e-003, 1.511346e-002, 2.070072e-002, 3.137916e-003, -3.383073e-002, -6.623556e-002, -5.115934e-002, -1.421927e-003, 2.163031e-002, -5.899859e-003, -2.369110e-002, 6.038629e-003, -5.222183e-002, -6.481591e-002, -2.265946e-003, 5.409784e-004, -4.337112e-002, -3.310896e-002, -3.898687e-002, -3.210844e-002, -5.118279e-002, -1.059585e-001, -1.261859e-003, 9.685065e-003, -5.226775e-003, 3.491923e-002, 2.886299e-002, 6.261862e-003, -1.790396e-002, -2.184769e-002, 1.482742e-002, 4.974550e-002, 4.080004e-002, -1.725700e-002, -3.243878e-002, -1.475042e-002, -6.591138e-002, -7.742510e-002, -6.356133e-003, -6.657897e-003, -7.988572e-002, -6.629489e-002, -3.432209e-002, -7.841349e-002, -1.145498e-001, -1.321612e-001, -6.520995e-004, 1.512814e-002, -8.280120e-003, 1.449780e-002, 8.223031e-003, -1.799826e-002, -2.365619e-002, -1.225573e-002, 7.517037e-003, 1.653321e-002, -1.457676e-002, -6.581880e-002, -4.243498e-002, -1.088512e-002, -4.634743e-002, -5.684207e-002, -8.212946e-003, -5.522410e-003, -4.031187e-002, -6.698037e-002, -1.868010e-003, -2.584639e-002, -1.385845e-001, -1.733142e-001, -5.836120e-004, 2.557686e-002, -4.157573e-003, -8.330059e-003, -1.959914e-002, -5.220966e-002, -7.000032e-002, -6.840724e-002, -4.959950e-002, -3.146226e-002, -3.204540e-002, -4.906261e-002, -2.545517e-003, 2.306689e-002, -1.777540e-002, -2.751161e-002, -4.816837e-002, -6.179351e-002, 5.137530e-002, 3.391364e-002, -1.805162e-002, 4.819750e-002, -4.737480e-002, -1.363967e-001, -1.470881e-003, 2.938273e-002, -5.073147e-003, -1.508543e-002, -1.891838e-002, -3.868453e-002, -5.468681e-002, -4.547715e-002, -1.222594e-002, 4.477558e-003, -1.217807e-002, -2.077775e-002, 2.756068e-002, -5.190521e-002, -6.104488e-002, -1.711911e-002, -4.428695e-002, -1.006871e-001, -4.055703e-003, 3.405050e-002, -7.136006e-002, -4.244596e-003, 3.303737e-003, -7.929502e-002, -5.743069e-003, 3.388306e-002, -9.573131e-003, -2.199761e-002, -2.393985e-002, -4.205963e-002, -5.739278e-002, -3.581726e-002, -2.142786e-003, -1.273723e-002, -5.633188e-002, -5.746371e-002, 7.361625e-003, -2.073236e-002, -2.453777e-002, 1.753195e-002, 2.635664e-002, 1.537273e-002, 1.014915e-002, 7.345628e-003, -6.023728e-002, -6.060093e-002, -4.648994e-002, -8.352529e-002, -

© ISO/IEC 2004 — All rights reserved


Copyright International Organization for Standardization
Provided by IHS under license with ISO
No reproduction or networking permitted without license from IHS
Not for Resale

3.332196e-002, 1.472278e-002, -6.452410e-003, -2.800136e-002, -3.536742e-002, -4.674704e-002, -6.123667e-002, -3.353029e-002, -1.116210e-002, -3.984453e-002, -7.576025e-002, -8.490122e-002, -7.098478e-002, -2.862841e-002, 1.328570e-002, 1.781461e-002, -3.103410e-005, -8.765065e-003, 8.771993e-003, 5.038019e-002, 4.770858e-002, 1.851862e-002, -6.471415e-002, -1.117792e-001, -5.299511e-002, -1.159945e-002, 6.708306e-004, -2.274360e-002, -4.219591e-002, -4.347041e-002, -5.152286e-002, -3.104472e-002, -8.416503e-003, -7.466353e-003, -1.007524e-002, 3.008632e-003, 1.043638e-002, 1.565731e-002, 6.630976e-003, -1.127653e-002, 1.225326e-003, 3.031618e-002, 1.865603e-002, 5.297825e-002, 1.019993e-001, 9.580295e-002, 9.817739e-003, -9.816165e-002, -1.143884e-002, -1.073277e-002, 8.407579e-003, -6.340434e-003, -3.784654e-002, -3.322759e-002, -3.495394e-002, -2.411374e-002, 1.371427e-002, 3.675245e-002, 5.607033e-002, 9.276739e-002, 1.094129e-001, 9.938198e-002, 5.516568e-002, -3.316339e-003, 2.380295e-002, 1.019165e-001, 1.085795e-001, 1.105211e-001, 1.115364e-001, 1.093192e-001, 6.760835e-002, -4.108226e-002, 2.660778e-003, 7.556879e-004, -5.616092e-003, 8.542676e-003, -2.845841e-002, -2.334604e-002, -1.525495e-002, -3.238510e-003, 3.874349e-002, 3.808721e-002, 3.737153e-002, 5.462070e-002, 6.643871e-002, 5.041324e-002, 1.388617e-002, -3.085554e-002, -3.327171e-002, 2.586361e-002, 6.707206e-002, 6.056227e-002, 4.324419e-002, 4.367237e-002, 4.299880e-002, -9.623533e-003, -2.923849e-002, 8.798209e-004, -1.784192e-002, 1.461629e-002, -2.089254e-002, -2.450995e-002, 4.334769e-003, 2.484361e-002, 6.026376e-002, 4.607805e-002, 1.906919e-002, 1.975820e-002, 4.271879e-002, 4.601170e-002, 4.322250e-002, 5.358765e-002, 4.193826e-002, 2.789637e-002, 2.702253e-002, 1.082902e-002, 1.423449e-002, 3.530960e-002, 6.127748e-002, 8.814391e-003, -5.210609e-002, -4.089635e-003, -2.443343e-002, 1.789448e-002, -4.508466e-003, -2.593969e-002, 1.075178e-002, 2.975865e-002, 3.291417e-002, 3.299125e-002, 3.992804e-002, 4.029988e-002, 2.767022e-002, 3.687942e-003, 1.422195e-002, 1.964054e-002, 2.805093e-002, -2.504949e-003, -1.572990e-002, -4.324859e-002, -3.198600e-002, 2.372415e-002, 5.547815e-002, 9.061224e-004, -2.697070e-002, -4.353203e-003, 7.912287e-003, 1.136175e-002, 1.154662e-002, -2.580160e-002, 1.436383e-002, 3.746380e-002, 1.699362e-002, 1.768792e-002, 6.646690e-002, 9.348466e-002, 6.250113e-002, 1.082527e-002, -1.681116e-002, -2.356037e-002, 1.751728e-006, 1.173372e-002, 2.803965e-002, 2.134423e-002, 2.946349e-002, 5.212214e-002, 3.309006e-002, -4.422488e-002, 1.183526e-002, 2.399321e-003, 4.614944e-002, 4.001902e-003, 2.454634e-002, -8.286561e-003, 1.478890e-002, 3.236751e-002, -3.030313e-003, -3.157851e-003, 2.138656e-002, 3.572485e-002, 2.714233e-002, 6.377896e-003, -2.019541e-003, 7.646189e-003, 3.228717e-002, 3.201659e-002, 6.883313e-003, -8.783707e-003, 6.480370e-003, 4.350038e-002, 3.657320e-002, -4.972953e-002, 2.068877e-002, 2.123077e-002, 3.765380e-002, -7.789804e-003, 3.175767e-002, 1.609543e-002, 1.273691e-002, 3.725904e-002, 1.593397e-002, -4.053572e-003, -6.668022e-003, 2.225017e-003, -5.608805e-003, -1.370930e-002, -1.248717e-002, 1.014391e-002, 4.143405e-002, 2.896055e-002, -1.420037e-002, -4.165186e-002, -1.882572e-002, 2.958646e-002, 3.526810e-002, -4.272816e-002, -2.411808e-002, 4.559688e-003, -1.980698e-002, -3.519126e-002, 2.045581e-002, 4.488760e-002, 1.531280e-002, 3.165897e-002, 3.274734e-002, 7.342256e-003, 8.373748e-003, 2.386447e-002, 1.651123e-002, 1.077556e-002, 1.177748e-002, 2.170800e-002, 2.694502e-002, 1.300818e-002, -9.987704e-003, -1.400386e-002, 5.790999e-003, 3.315337e-002, 2.708240e-002, -3.787704e-002, -6.202873e-002, -1.847007e-002, -4.737869e-002, -5.589488e-002, -8.383137e-003, 3.995253e-002, 5.581389e-003, 6.564829e-003, 1.865468e-002, 7.974642e-003, 3.458713e-003, 1.911754e-002, 2.603262e-002, 2.759391e-002, 2.885765e-002, 1.935150e-002, 9.310543e-003, 3.171600e-003, -1.769268e-003, -1.767437e-002, -1.910748e-002, -8.359051e-003, -1.048010e-002, -4.636714e-002, -3.736700e-002, 3.263438e-003, 4.018939e-004, -1.641261e-002, -1.666391e-002, 6.606721e-003, -4.431273e-004, -1.857914e-002, -1.157218e-003, 3.141961e-003, -6.193076e-003, 3.647770e-003, 1.993980e-002, 2.656119e-002, 2.575595e-002, 2.210039e-002, 1.128331e-002, 7.498197e-003, 2.897929e-003, -1.492342e-002, -2.410183e-002, -1.503623e-002, -1.582891e-002, -4.532770e-002, 2.861592e-003, 3.267547e-002, 5.392949e-002, 4.191921e-002, -2.197565e-003, -4.285205e-002, -5.825074e-003, -7.534121e-003, -1.179919e-002, -3.684843e-003, 2.956867e-003, 7.381612e-003, 1.643295e-002, 2.083784e-002, 1.338662e-002, 2.749287e-003, -1.148820e-002, -9.802739e-003, -5.337440e-003, -6.440287e-003, -3.026416e-003, 2.003515e-002, 8.978526e-003, -4.140146e-002, -9.340382e-003, -1.382168e-002, 2.407705e-002, 2.996609e-002, 3.069702e-002, -6.400166e-002, -1.006166e-002, 2.429949e-002, -3.835019e-003, -3.036776e-003, 1.704796e-002, 1.812868e-002, 1.294599e-002, 1.488857e-002, 1.348137e-002, 4.822947e-003, -1.867786e-002, -2.823459e-002, -2.164308e-002, -9.634109e-003, 2.382058e-002, 5.448973e-002, 3.734179e-002, -4.787251e-002, -4.276498e-002, -5.725833e-002, -2.466129e-002, 7.183557e-003, 5.706416e-002, -2.414971e-002, 9.478002e-003, 5.100258e-002, 2.177609e-002, 3.683109e-003, 2.342434e-002, 1.912515e-002, 8.317104e-003, 1.213247e-002, 1.219880e-002, 3.619614e-003, -2.357610e-002, -5.111816e-002, -4.890938e-002, -2.337128e-002, 3.601226e-002, 5.169530e-002, 1.895636e-002, -6.095953e-002},
{-9.260901e-004, -4.381840e-002, -2.320303e-002, -8.693088e-002, -8.778456e-003, 8.358763e-002, 2.830693e-002, -1.140742e-001, -1.327223e-001, -8.814031e-002, -3.292088e-002, 3.924659e-002, -8.647252e-002, -2.189976e-001, -9.073750e-002, -8.040893e-002, -7.326039e-002, -6.966936e-002, -1.380036e-001, -1.952261e-001, -5.707506e-002, 1.133722e-002, -7.072047e-002, -8.829949e-002,


© ISO/IEC 2004 — All rights reserved

Copyright International Organization for Standardization
Provided by IHS under license with ISO
No reproduction or networking permitted without license from IHS
Not for Resale

1.226638e-002, -2.501778e-002, 1.641971e-002, -1.860213e-002, 1.183274e-002, 3.980593e-002, -1.447382e-002, -8.817581e-002, -9.717200e-002, -3.427878e-002, 5.585618e-002, 7.738437e-002, -4.781829e-002, -6.528952e-002, -1.527295e-002, -5.662512e-002, -4.306037e-002, -3.758632e-002, -5.432755e-003, -6.651460e-002, 2.082754e-002, 4.305362e-002, -1.889403e-002, -8.544655e-002, 8.578229e-003, 5.220930e-003, 3.622084e-002, 3.169035e-002, 1.201188e-002, -1.288757e-002, -7.677918e-002, -1.301367e-001, -1.113121e-001, -2.691698e-002, 5.053682e-002, 1.975773e-002, -5.242396e-002, 3.670836e-002, -1.029991e-004, -2.744718e-002, -2.634392e-004, -1.632351e-002, 2.784355e-002, 2.863287e-002, 5.846854e-002, 4.318161e-002, -2.794532e-002, -9.665854e-002, 1.147514e-002, 1.915741e-002, 2.701215e-002, 3.870724e-002, 3.043160e-002, -5.569651e-003, -5.993832e-002, -9.457628e-002, -5.692225e-002, 1.302288e-002, 2.120037e-002, -4.425983e-002, -3.892082e-002, 3.091223e-002, -1.003826e-002, 1.248099e-002, 3.689024e-002, 6.483876e-003, -1.002217e-002, 1.036175e-002, 4.005534e-002, 6.288342e-002, 7.634784e-004, -7.403064e-002, 2.268640e-002, 1.711463e-002, 2.727830e-003, 1.480074e-002, 2.722871e-002, 2.618405e-002, 1.772011e-003, 1.208079e-003, 3.431146e-002, 6.103488e-002, 1.478338e-002, -7.171237e-002, -6.179128e-002, -9.934426e-003, -8.297386e-003, 1.946603e-002, 5.935029e-002, 3.536379e-002, -3.953636e-002, -5.473446e-002, -6.795180e-002, 2.186862e-002, 5.542448e-002, 1.892307e-002, 3.140488e-002, 1.714005e-002, -8.929600e-003, -1.484823e-002, 7.319455e-003, 4.238524e-002, 6.846880e-002, 8.899217e-002, 1.054899e-001, 8.979204e-002, 1.418405e-002, -7.327795e-002, -5.655472e-002, -6.152964e-003, 7.692099e-004, -9.594040e-006, 3.633741e-002, 4.648453e-002, -4.023528e-003, -7.713632e-002, -1.302130e-001, -8.056185e-002, 1.504229e-002, 4.831863e-002, 1.981306e-002, 1.120680e-002, -1.518105e-003, -1.727251e-002, 6.793195e-003, 4.503817e-002, 7.717587e-002, 9.904547e-002, 1.004208e-001, 6.849753e-002, 2.433224e-002, -2.252962e-002, -3.883051e-002, 1.043998e-002, 3.311494e-003, -1.810846e-002, -1.682450e-002, 1.610657e-003, 4.991682e-002, -4.326990e-002, -8.890767e-002, -6.422205e-002, -1.315324e-002, 2.907395e-002, 4.625359e-003, -5.764535e-004, 1.817808e-003, -7.396425e-003, 7.021708e-003, 4.380427e-002, 6.400015e-002, 7.549075e-002, 6.641285e-002, 4.993978e-002, 4.295288e-002, -9.984044e-003, -5.399944e-002, 1.063264e-002, 2.964170e-002, 2.106497e-002, 9.806949e-004, -2.972919e-002, 3.095650e-002, -5.219697e-002, -6.148395e-002, 1.308654e-002, 1.759950e-002, 1.814029e-002, 3.617062e-003, -2.731530e-003, 5.762078e-003, -8.036716e-003, -1.495600e-002, 5.666522e-003, 5.367143e-003, -5.725817e-003, -1.454783e-002, 1.580899e-002, 4.395541e-002, -3.084877e-002, -2.573811e-002, 7.836109e-002, 3.377142e-002, -2.458141e-003, -1.114252e-002, -4.727006e-002, 1.470008e-002, -5.009560e-002, -5.354187e-002, 4.140387e-002, 3.214712e-002, -1.456079e-002, -7.858985e-003, -2.289867e-002, 6.036051e-003, 1.329393e-004, -3.238424e-002, -3.107979e-002, -5.330576e-002, -7.864456e-002, -5.772778e-002, 1.583359e-002, 3.098196e-002, -1.917575e-002, 1.374470e-002, 5.429061e-002, -2.763172e-002, 2.340855e-003, 1.396632e-002, -4.086657e-002, 2.897535e-002, 8.490463e-003, -2.648072e-002, 3.240671e-002, 4.366826e-002, -2.161666e-002, -9.702628e-003, -2.505290e-002, -4.290415e-003, 1.167598e-002, -4.085388e-002, -5.601016e-002, -8.123704e-002, -1.010269e-001, -3.635092e-002, 2.439669e-002, 1.611045e-002, 1.646111e-002, 5.307152e-002, 3.918608e-002, -7.992062e-003, 3.551813e-002, 2.976723e-002, -3.302046e-002, 2.438354e-002, 6.850106e-002, 4.454405e-002, 3.712996e-002, 3.214362e-002, -8.649465e-003, 3.507454e-003, -1.281552e-002, -1.457977e-002, 1.677890e-002, -3.923457e-002, -6.083953e-002, -6.676631e-002, -6.317549e-002, -4.762411e-003, 7.751181e-003, 1.013092e-002, 5.118104e-002, 7.724558e-002, 5.513206e-002, -1.685666e-002, -2.073050e-002, -3.297043e-002, -3.692496e-002, 2.712236e-002, 7.403375e-002, 6.719901e-002, 4.716069e-002, 3.098250e-002, -6.786942e-003, 1.457663e-002, 1.944585e-002, -1.471287e-002, 1.701269e-002, -2.250532e-002, -4.519889e-002, -7.861257e-003, 9.570316e-003, 1.453461e-002, -2.585796e-002, -1.101237e-002, 5.311001e-002, 8.704323e-002, 4.979849e-002, -2.199024e-002, -5.159512e-002, -6.543300e-002, -1.415018e-002, 3.216833e-002, 6.018252e-002, 5.012077e-002, 2.746859e-002, 1.526084e-002, -4.511500e-003, 3.333122e-002, 4.423662e-002, 1.957672e-003, 4.763252e-003, -1.635059e-002, -2.328395e-002, 4.201520e-002, 6.057950e-002, 6.307067e-003, -4.831536e-002, -2.408763e-002, 2.944655e-002, 4.439017e-002, 9.555879e-003, -1.763808e-002, -4.107232e-002, -3.314264e-002, 2.360965e-002, 4.475592e-002, 6.298238e-002, 4.786226e-002, 4.879993e-003, -1.114559e-003, 1.404462e-002, 3.812152e-002, 3.576901e-002, 1.798198e-002, -7.569451e-003, -2.629879e-002, -1.508026e-002, 6.496402e-002, 7.741364e-002, 1.113414e-002, -1.429666e-002, 1.859555e-002, 2.649547e-002, 1.111171e-002, -7.581092e-003, -1.607566e-002, -3.425780e-002, -2.189825e-002, 9.472813e-003, 2.925248e-002, 2.993083e-002, 1.869713e-002, 4.230137e-003, 3.812969e-002, 7.750956e-002, 3.929468e-002, -1.421628e-002, 2.449664e-002, -1.972301e-002, -3.584744e-002, -2.199944e-002, 6.117921e-002, 7.219504e-002, 1.399338e-002, -6.342751e-003, 9.225653e-003, 2.929589e-002, 4.702915e-002, 3.971989e-002, -9.950966e-003, -3.783278e-002, -3.599565e-002, -2.258164e-002, -1.591364e-003, 1.351645e-002, 1.982623e-002, 1.847739e-002, 3.550226e-002, 7.355369e-002, 4.416644e-002, -4.980202e-002, 6.948072e-004, -1.664468e-002, -3.073532e-002, -1.892905e-002, 3.217004e-002, 5.187251e-002, 1.176481e-002, -2.680119e-002, -4.250069e-002, -5.390073e-003, 2.552730e-002, 1.427109e-002, -1.540822e-002, -3.380002e-002, -3.069926e-002, -1.496357e-002, 2.259313e-002, 4.044393e-002, 2.802656e-002, -3.919340e-004, -4.878708e-003, 3.248393e-002,

© ISO/IEC 2004 — All rights reserved


Copyright International Organization for Standardization
Provided by IHS under license with ISO
No reproduction or networking permitted without license from IHS
Not for Resale

6.757752e-002, -2.904518e-002, -3.268762e-002, -7.910622e-003, -7.789780e-003, -5.239894e-003, 1.972312e-002, 4.549166e-002, 4.122895e-002, 3.219685e-002, 2.317364e-002, 2.970923e-002, 2.329881e-002, -1.787393e-003, -2.685093e-002, -2.979163e-002, -1.435930e-002, 1.086886e-002, 3.454676e-002, 3.333462e-002, 1.945887e-002, -1.673869e-003, -2.522767e-003, 3.277484e-002, 7.166734e-002, -1.647211e-003, -1.905881e-002, -1.542054e-002, 4.910923e-003, 1.888925e-002, 1.961298e-002, 1.136393e-002, 1.728937e-002, 1.718650e-002, 1.026798e-002, -2.153601e-003, -2.209338e-002, -2.556138e-002, -2.359629e-002, -1.431023e-002, -4.545364e-004, 1.003780e-002, 1.622038e-003, -2.015479e-002, -3.735213e-002, -3.331679e-002, -2.689218e-003, 4.954456e-002, 4.886297e-002, 6.683814e-004, 1.213698e-002, -2.337300e-002, -9.067750e-004, 1.641823e-002, 1.586217e-002, -5.196213e-003, -2.499811e-002, -1.627386e-002, -3.131756e-003, -5.461888e-003, -1.210278e-002, -6.025999e-003, 7.695043e-003, 2.034153e-002, 3.320979e-002, 2.365810e-002, 1.335052e-003, -2.187666e-002, -3.225143e-002, -1.411693e-002, 1.383008e-002, 4.674664e-002, 3.825143e-002, -3.948166e-002, 2.992488e-002, 7.020023e-003, -2.930833e-003, -5.381725e-003, 1.876625e-002, 1.427304e-002, -2.356315e-002, -2.254365e-002, 4.742380e-003, 1.247811e-002, -2.198457e-003, -2.663330e-003, 9.927093e-003, 2.696671e-002, 3.438088e-002, 2.524753e-002, 1.291150e-002, 1.923642e-003, -7.149651e-003, 8.177702e-003, 2.311880e-002, 4.386610e-002, 1.687858e-002, -1.034979e-001, -6.706783e-003, 2.228044e-002, 1.166124e-002, -1.440709e-002, 5.655531e-003, 2.186282e-002, 4.192594e-003, -8.666954e-003, 5.048426e-003, 1.323989e-002, -3.985406e-004, -5.786469e-003, 3.708897e-003, 1.270325e-002, 1.625557e-002, 1.672516e-003, -9.179367e-003, -1.599678e-002, -2.117185e-002, -8.063365e-003, 1.213755e-002, 3.403516e-002, 5.169845e-002, -6.543080e-002, 7.709841e-003, -2.504352e-002, 1.948055e-003, 2.610355e-003, -2.897109e-003, 1.757147e-003, 1.058555e-002, 3.965066e-003, -5.856047e-004, 9.461023e-004, -4.429974e-003, -5.499130e-003, 1.195878e-002, 2.616583e-002, 2.617926e-002, 7.039629e-003, -1.378799e-002, -3.014942e-002, -4.148768e-002, -2.652108e-002, 1.034576e-002, 5.774787e-002, 1.797712e-001, 6.809618e-002, 2.787930e-002, -6.355314e-002, -1.595592e-002, 1.612405e-002, 9.519543e-003, -6.010828e-003, 4.755919e-003, 4.939679e-003, 3.075651e-004, -1.060956e-002, -1.365862e-002, 1.411603e-003, 2.070344e-002, 4.465513e-002, 4.636760e-002, 2.714486e-002, -4.212447e-003, -3.281392e-002, -3.522536e-002, -1.077812e-002, 4.596438e-002, 1.054929e-001},
{-1.048448e-001, -2.327335e-002, -1.539729e-002, 4.705728e-002, 2.359657e-002, 5.502205e-002, 1.050485e-001, 6.103876e-002, -3.051108e-002, -2.832440e-002, -1.004510e-002, -1.655818e-002, 3.029483e-003, 9.486296e-003, -5.107234e-002, -9.150444e-002, -1.380443e-001, -1.303710e-001, -4.853352e-002, 1.614589e-002, 5.420405e-002, 7.135329e-002, 4.633132e-002, -4.150455e-002, -5.159747e-002, -5.102665e-003, -3.234065e-002, 6.741208e-004, -5.220832e-002, -4.269700e-002, 1.659688e-002, 6.494094e-002, 7.501209e-002, 6.768582e-002, 4.294121e-002, 1.876776e-002, 3.108793e-003, -6.766122e-002, -8.413141e-002, -1.032148e-001, -1.215262e-001, -1.267037e-001, -1.237567e-001, -8.895092e-002, -4.398201e-002, 3.984896e-002, 8.976568e-002, 9.217171e-002, 7.548178e-003, 1.849807e-004, -3.268033e-002, -1.085572e-003, -6.868769e-002, -9.170271e-002, -2.854034e-002, 4.583186e-002, 7.565519e-002, 6.818503e-002, 4.059290e-002, 3.159232e-002, -2.844462e-002, -1.092411e-001, -7.853870e-002, -9.246023e-002, -7.985072e-002, -7.624983e-002, -1.164238e-001, -1.244563e-001, -1.012911e-001, 2.555953e-003, 8.947363e-002, 1.255015e-001, 4.024794e-002, 2.406193e-002, -2.596493e-002, 1.306737e-002, -2.059712e-002, -7.045849e-002, -4.288725e-002, 1.388302e-002, 3.077928e-002, 2.211913e-002, 1.008609e-002, -2.191058e-002, -8.531466e-002, -8.077589e-002, -4.729481e-002, -6.553793e-002, -3.035839e-002, -1.769444e-003, -5.422619e-002, -7.155358e-002, -8.969041e-002, -4.387915e-002, 4.845542e-002, 1.032326e-001, 3.314366e-002, 3.983888e-002, -7.253780e-003, 1.610148e-002, 1.795783e-002, -2.466989e-002, -2.522361e-002, -6.910165e-003, -1.466234e-002, -3.388804e-002, -5.719746e-002, -7.240994e-002, -6.171624e-002, -1.511716e-002, -1.554940e-002, -2.698557e-002, 6.300876e-003, 5.921668e-002, 2.121885e-002, -1.344039e-002, -2.257705e-003, -2.913041e-002, -1.489694e-003, 3.997831e-002, -3.393774e-003, 3.247598e-002, 1.220307e-003, 1.771766e-002, 2.563664e-002, -8.373171e-003, -3.088974e-002, -5.063957e-002, -8.016914e-002, -9.905327e-002, -7.808083e-002, -1.483321e-002, 2.947351e-002, 3.267119e-002, 1.773137e-002, 1.463528e-002, 3.372088e-002, 8.096460e-002, 6.512964e-002, 1.236976e-002, 5.154612e-002, 4.402728e-002, 1.205314e-002, 3.852979e-003, -2.108035e-002, 1.595198e-002, -6.698008e-003, 7.239073e-003, 2.072864e-002, 1.589335e-003, -9.548338e-003, -2.891447e-002, -6.035893e-002, -5.005503e-002, 9.423209e-003, 6.230849e-002, 8.679610e-002, 6.067576e-002, 4.639707e-002, 6.427438e-002, 6.551015e-002, 7.513294e-002, 5.462678e-002, 2.390976e-002, 4.015233e-002, 5.653168e-002, 3.058156e-002, 1.102792e-002, -1.771520e-002, 4.813628e-003, -1.099220e-002, -6.399425e-003, 1.224607e-002, 7.374062e-003, 2.597950e-003, 1.763599e-003, 4.975139e-003, 4.702852e-002, 7.157319e-002, 4.463804e-002, 6.412895e-002, 3.131309e-002, 5.231841e-002, 8.602364e-002, 7.536777e-002, 5.433938e-002, 4.119694e-002, 6.587052e-002, 4.361163e-002, 4.767628e-002, 3.400900e-002, 1.645841e-002, -3.933353e-003, -6.656442e-003, -8.567757e-003, -1.017245e-002, 2.538846e-003, 1.236576e-002, 1.842203e-002, 4.232535e-002, 7.913686e-002, 9.386383e-002, 5.156392e-002, -7.572484e-004, -6.218167e-003, -3.277609e-003, 5.924490e-002, 8.372308e-002, 9.305205e-002, 7.688634e-002, -6.387288e-003, 9.914220e-004, 4.888759e-002, 5.944867e-002, 4.399765e-002, 2.942785e-002,


© ISO/IEC 2004 — All rights reserved
--`,,```,,,,````-`-`,,`,,`,`,,`---

Copyright International Organization for Standardization
Provided by IHS under license with ISO
No reproduction or networking permitted without license from IHS
Not for Resale

2.260458e-002, -1.074447e-002, -2.109162e-003, -8.271991e-003, -6.162071e-003, 8.294623e-003, 2.358576e-002, 6.570200e-002, 1.045363e-001, 7.883119e-002, 1.214803e-002, -4.139349e-002, -2.808900e-002, 4.070558e-002, 8.205714e-002, 4.680647e-002, 4.933952e-002, 8.677778e-002, -2.675674e-002, -8.707439e-002, -5.732844e-003, 5.326296e-002, 4.314868e-002, 3.049887e-002, 2.043319e-002, -9.971611e-003, 2.861448e-006, -1.382512e-003, -1.434155e-002, -3.274373e-003, 1.609832e-002, 5.258185e-002, 7.370446e-002, 5.251544e-002, -2.174983e-003, -6.981740e-002, -7.927524e-002, 1.015466e-002, 9.738190e-002, 4.835619e-002, 1.190424e-002, 4.425484e-002, 2.068407e-003, -6.179138e-002, -4.485968e-002, 1.086688e-002, 2.508228e-002, 1.076560e-002, -5.148439e-003, -3.370943e-002, -7.562303e-003, 1.006883e-002, -1.595404e-002, -1.277724e-002, -3.122067e-003, 1.551601e-002, 3.016484e-002, 2.337268e-002, -1.807830e-002, -8.653966e-002, -9.930897e-002, -2.436022e-002, 7.312858e-002, 7.113552e-002, 3.124364e-002, 3.827019e-002, 1.667571e-002, -2.148339e-002, -3.967489e-002, -1.381130e-002, 8.916781e-003, -1.929280e-003, -1.191359e-003, -3.621729e-002, -1.704041e-002, 1.430641e-002, -6.133693e-003, -1.076097e-002, -1.437781e-002, -1.782622e-002, -5.710021e-003, 1.228554e-003, -3.437022e-002, -8.074777e-002, -9.163668e-002, -5.198637e-002, 1.688671e-002, 6.335293e-002, 4.919031e-002, 1.602120e-002, 2.606806e-003, -2.233402e-002, -3.372679e-002, -4.325258e-002, -3.338931e-002, -2.280567e-002, 1.544174e-002, -2.197205e-002, -5.276973e-003, 1.131894e-002, 3.773436e-003, -9.609943e-003, -9.529973e-003, -1.955842e-002, -1.243253e-002, -1.540245e-002, -3.324382e-002, -4.454737e-002, -5.060798e-002, -4.075312e-002, -1.087940e-002, 3.614449e-002, 4.625092e-002, -3.723214e-003, -3.256797e-002, -5.171978e-002, -5.360666e-002, -5.413331e-002, -3.684374e-002, -2.569547e-002, 1.331450e-002, -1.982710e-002, 1.449997e-002, 1.169973e-002, 1.372167e-002, 7.671686e-003, 1.609469e-002, 5.463291e-003, -1.903403e-002, -3.439948e-002, -4.407104e-002, -2.394149e-002, -2.043885e-002, -2.119294e-002, -1.089049e-003, 3.144871e-002, 5.797865e-002, 2.727338e-002, -3.210760e-002, -7.944422e-002, -8.914080e-002, -3.597408e-002, 2.166770e-002, 1.372431e-002, 3.576990e-003, -2.609412e-002, 3.920962e-002, 1.078232e-002, 1.073569e-002, 2.244141e-002, 3.960811e-002, 2.394384e-002, -2.563860e-002, -4.258556e-002, -2.572100e-002, -8.974248e-003, -2.856235e-002, -3.582029e-002, -1.608707e-002, 3.352233e-004, 2.437229e-002, 2.784631e-002, 1.057898e-003, -3.007674e-002, -4.180600e-002, 4.488926e-003, 3.731361e-002, 1.252829e-002, 1.820770e-002, -2.381134e-002, 5.252821e-002, 1.436524e-002, -4.172372e-003, 1.700035e-002, 4.054881e-002, 1.222700e-002, -4.151149e-002, -3.835347e-002, -6.132329e-004, 9.439025e-003, 4.646938e-004, 1.214133e-003, -4.629127e-004, -5.398731e-003, -1.052062e-002, -7.385306e-003, -1.346189e-002, -1.673841e-002, -2.388462e-002, -2.149246e-002, -3.848337e-002, -6.225790e-002, 4.059384e-002, 4.727062e-003, 3.800302e-002, 4.965863e-004, -2.936993e-002, 6.510753e-003, 2.140711e-002, -5.572168e-003, -2.715564e-002, 7.782087e-004, 2.033272e-002, 1.210679e-002, -3.923472e-003, -9.407263e-003, -1.145037e-002, -1.565597e-002, -2.902051e-002, -3.179297e-002, -2.558386e-002, -1.871195e-002, -6.849362e-003, -6.939639e-004, -2.412058e-002, -6.067761e-002, 3.173758e-002, 1.879740e-003, 8.149807e-003, -2.384478e-002, -2.146726e-002, 6.439132e-003, 3.079356e-003, -7.636293e-003, 6.146243e-003, 4.088855e-002, 4.386441e-002, 2.114116e-002, -4.804885e-003, -2.275785e-002, -3.279451e-002, -3.015284e-002, -3.907183e-002, -4.842544e-002, -3.568179e-002, -1.753438e-002, 4.231255e-003, 2.349392e-002, 1.423027e-002, -9.130404e-003, 1.314464e-002, -2.578071e-002, 2.080241e-003, -1.050811e-002, 1.201155e-002, 3.012432e-002, -4.689042e-003, -1.370085e-002, 1.637850e-002, 5.078494e-002, 4.423181e-002, 1.924705e-002, -8.677001e-003, -2.711403e-002, -3.425441e-002, -2.475968e-002, -3.281055e-002, -4.560286e-002, -4.172524e-002, -2.634701e-002, 2.294815e-003, 2.498449e-002, 3.038764e-002, 2.195367e-002, -2.456091e-002, -3.906759e-002, 3.589998e-002, 3.180076e-003, 2.261337e-003, 1.850342e-002, -1.389744e-002, -3.699793e-002, -1.082074e-002, 2.082195e-002, 9.680488e-003, -4.231338e-003, -1.113497e-002, -8.148786e-003, 3.620519e-004, 4.100420e-003, -9.933190e-003, -2.347348e-002, -3.152165e-002, -2.899980e-002, -1.032449e-002, -5.968058e-004, 1.131346e-002, 2.389968e-002, -6.069420e-004, -6.659565e-003, 4.049155e-002, -2.071529e-002, -4.399214e-002, -3.439506e-002, -3.577456e-002, -4.343958e-002, -3.365414e-002, -1.446061e-002, -1.456293e-002, -2.773539e-002, -2.951015e-002, -1.573861e-002, 4.269987e-003, 6.579885e-003, -4.478305e-004, -2.233126e-003, -6.383778e-003, -1.394785e-002, -1.679438e-002, -5.323685e-003, 9.096119e-003, 1.996608e-002, 4.949539e-002, -1.697503e-002, -6.285160e-003, -3.026399e-002, -2.876958e-002, -2.030092e-002, -2.705997e-002, -1.466177e-002, -1.802692e-003, -1.158315e-002, -1.214858e-002, -1.728195e-002, -3.103827e-002, -1.893958e-002, -4.986106e-003, -3.205474e-003, 5.385752e-004, 1.200704e-002, 7.282503e-003, -4.184608e-003, -1.304992e-002, 2.801615e-003, 9.085461e-003, 6.406072e-003, 9.370988e-002, -7.398106e-003, 9.752397e-003, 3.551137e-002, 4.894588e-002, 4.323850e-002, 2.829919e-002, 3.649933e-002, 5.503145e-002, 3.669214e-002, 2.258420e-002, 1.606040e-002, 1.438520e-002, 1.332104e-002, 1.554570e-002, 1.390832e-002, 1.990896e-002, 3.029841e-002, 2.683918e-002, 1.776436e-002, 5.617779e-003, 1.181990e-002, 6.526741e-003, 6.678472e-003},
{-2.136571e-002, -9.084753e-003, -1.985518e-002, -5.734409e-002, -2.324034e-002, -1.193482e-004, -1.644224e-002, -1.811507e-002, 2.176916e-002, 4.595232e-002, 3.463961e-002, -6.575585e-002, -1.727844e-001, -1.222477e-001, -1.067905e-001, -8.488475e-002, -8.056337e-002, -7.323668e-002, -1.263834e-002, 2.753494e-002, 2.178016e-002, 3.015311e-002, -1.778390e-002, -5.560137e-

© ISO/IEC 2004 — All rights reserved


Copyright International Organization for Standardization
Provided by IHS under license with ISO
No reproduction or networking permitted without license from IHS
Not for Resale

002, -1.106193e-002, -4.159472e-003, 2.048919e-002, -4.267760e-003, 1.099629e-002, 2.902992e-002, 5.143170e-002, 1.036827e-001, 1.542134e-001, 1.613583e-001, 1.187615e-001, 5.965189e-003, -6.022491e-002, -2.798859e-002, -4.107648e-002, 6.021686e-003, 6.043191e-003, -3.856772e-002, -2.057801e-002, 1.557587e-003, 3.429252e-002, 1.034661e-001, 1.350598e-001, 1.364191e-001, 2.174402e-003, -4.217404e-003, 2.581415e-002, 3.883947e-002, 2.495522e-002, 3.930876e-003, 9.903430e-003, 7.139302e-002, 1.188060e-001, 1.204311e-001, 1.019667e-001, 8.105615e-002, 6.342139e-002, 1.048642e-002, 6.797630e-003, 5.781791e-002, 6.091039e-002, 1.107003e-002, -1.939547e-002, -3.287180e-002, -1.217294e-002, 3.942052e-002, 7.276415e-002, 9.865508e-002, 2.093097e-002, -9.337736e-003, -1.357626e-003, 2.734463e-002, 2.492898e-002, -7.882898e-003, -3.072556e-002, 1.841378e-002, 5.729890e-002, 8.068556e-002, 1.070695e-001, 1.094766e-001, 5.301799e-002, 6.603608e-003, 2.456408e-002, 6.334042e-002, 5.560545e-002, 2.459104e-002, 5.772859e-003, -2.924411e-002, -5.701399e-002, -2.937822e-002, 5.017273e-003, 1.201545e-002, 2.820141e-002, -1.756771e-002, -1.571250e-002, -3.003233e-002, -3.071641e-002, -3.886967e-002, -6.574663e-002, -3.515936e-002, 1.887269e-003, 2.325978e-002, 1.506360e-002, -1.195839e-002, 1.266825e-003, 1.164001e-002, 4.144649e-003, 1.849931e-002, 1.715612e-002, 5.105122e-003, 2.955138e-002, 1.062830e-002, -2.167581e-002, -5.938827e-002, -4.947264e-002, -4.485833e-002, 3.666108e-002, -2.215297e-002, -2.278791e-002, -5.190460e-002, -6.971619e-002, -7.953307e-002, -1.117654e-001, -1.052318e-001, -8.809721e-002, -8.957154e-002, -9.304834e-002, -2.897626e-002, 5.728885e-002, 4.301298e-002, -5.225917e-003, -1.319430e-002, -2.062692e-002, -4.099806e-002, 2.396133e-002, 4.837180e-002, 7.097953e-004, -8.024361e-003, -1.445452e-002, -3.646364e-002, 2.843227e-002, -2.138118e-002, -2.501275e-002, -3.721280e-002, -5.400816e-002, -6.151436e-002, -8.350657e-002, -9.474746e-002, -1.067814e-001, -1.136866e-001, -8.540737e-002, 1.380834e-002, 8.323740e-002, 4.795800e-002, -9.171959e-003, -1.346273e-002, 1.668862e-003, -8.274339e-003, 3.598686e-002, 5.813458e-002, -1.194002e-002, -6.232145e-002, -2.268906e-002, -1.417189e-002, 8.321558e-004, -1.985588e-002, -1.852515e-002, -1.582244e-002, -1.170959e-002, -1.375056e-002, -3.189110e-002, -5.421110e-002, -7.238979e-002, -7.653592e-002, -7.472326e-002, -4.124861e-002, -1.809754e-002, -4.271855e-002, -4.660702e-002, -1.948945e-002, 8.742331e-003, 1.806065e-002, 4.252707e-002, 2.098765e-002, -6.544907e-002, -1.261593e-001, -7.110643e-002, -7.033132e-003, -1.409533e-002, -1.727443e-002, 7.428242e-004, 1.325654e-002, 2.299746e-002, 3.245844e-002, 2.866037e-002, 4.288771e-003, -1.849922e-002, -4.828372e-002, -8.233942e-002, -5.801046e-002, -1.063197e-002, -5.914868e-003, -8.023395e-004, -1.115399e-002, -1.864919e-002, -1.851675e-002, 2.682187e-002, -3.316811e-003, -1.002964e-001, -1.509235e-001, -8.808739e-002, 5.118925e-003, -2.501502e-002, -9.900862e-003, 1.311106e-002, 3.460455e-002, 4.987998e-002, 6.695144e-002, 7.660894e-002, 5.940372e-002, 1.452607e-002, -3.595170e-002, -5.610278e-002, 1.341834e-002, 8.246028e-002, 2.507169e-002, -3.436904e-002, -1.013849e-002, -7.409025e-003, -2.178405e-002, -5.618995e-004, 3.789312e-002, -5.118499e-002, -1.056261e-001, -5.377173e-002, 2.746259e-002, -1.603586e-003, -6.017071e-003, 1.844284e-002, 4.486282e-002, 5.893023e-002, 7.428930e-002, 8.589514e-002, 6.628513e-002, 1.296864e-002, -2.204800e-002, -1.649072e-003, 3.197387e-002, 6.694428e-003, -7.067035e-002, -6.835527e-002, 4.595170e-003, 1.125085e-002, -5.988351e-002, -5.766179e-002, -2.201566e-002, -4.489556e-002, -4.999279e-002, 1.829625e-003, 5.241512e-002, 2.271587e-002, -6.480750e-003, 4.808674e-003, 3.094100e-002, 4.705894e-002, 5.916448e-002, 6.062035e-002, 4.246134e-002, 3.866123e-003, 7.188676e-004, 3.303201e-002, 1.625508e-002, -3.426503e-002, -6.950178e-002, -4.088369e-002, 1.274831e-002, -5.912467e-003, -8.766931e-002, -8.553536e-002, -6.893359e-002, -5.020969e-002, -1.325624e-002, 4.245640e-002, 8.413251e-002, 3.555541e-002, -6.342384e-003, -7.267323e-003, 9.441020e-003, 2.230083e-002, 2.761066e-002, 1.659502e-002, 5.123719e-003, -5.412709e-003, 3.179419e-002, 5.647997e-002, 2.561265e-002, -9.282675e-003, -2.961654e-002, -2.162784e-002, -8.862977e-003, -3.434189e-002, -8.059409e-002, -7.113073e-002, -4.026077e-002, -1.306216e-002, 2.479737e-002, 6.323910e-002, 9.049208e-002, 2.343404e-002, -1.352696e-003, -4.972801e-003, 2.298140e-004, 9.820013e-004, -3.021044e-003, -2.581331e-002, -2.507722e-002, -1.060703e-002, 2.416036e-002, 4.742013e-002, 2.757504e-002, -3.380217e-003, -2.011744e-002, -2.762353e-002, -4.375702e-002, -4.227430e-002, -2.335633e-002, 2.799463e-003, 3.836057e-002, 5.626096e-002, 6.606190e-002, 5.954700e-002, 4.451764e-002, 1.068972e-002, 1.212034e-002, 2.210116e-003, 7.134554e-003, -8.162810e-003, -1.717207e-002, -3.779544e-002, -3.217637e-002, -9.213882e-003, 2.424887e-003, 3.949998e-003, 1.515508e-002, 1.747871e-002, 2.343196e-002, 6.055773e-003, -3.013842e-002, -2.311762e-002, 6.688603e-004, 1.778475e-002, 2.936901e-002, 4.291725e-002, 4.657832e-002, 8.857125e-003, -3.219387e-002, 1.041597e-002, 1.905506e-002, 7.038736e-003, 1.833294e-002, -5.504777e-003, -1.708293e-002, -2.863864e-002, -2.991736e-002, -1.627713e-002, 4.943180e-003, 1.983453e-002, 3.581718e-002, 3.114063e-002, 1.466103e-002, 4.002776e-003, 4.773473e-003, 4.609330e-003, -5.127369e-003, 1.187928e-002, 4.435417e-002, 5.752492e-002, 3.341768e-002, -1.459300e-002, -4.855429e-002, 3.597255e-003, 1.679612e-002, 9.940596e-003, 1.508065e-002, 6.362620e-004, -9.652723e-003, -1.891077e-002, -3.386231e-002, -3.783316e-002, -9.531469e-003, 2.125756e-002, 3.587643e-002, 2.636150e-002, 9.775083e-003, -1.026936e-002, -4.201796e-003, -3.586329e-003, -9.809057e-003, 6.143773e-003, 3.382158e-002, 4.560725e-002, 2.894891e-002, -6.970331e-003, -2.968774e-002,


--`,,```,,,,````-`-`,,`,,`,`,,`---
© ISO/IEC 2004 — All rights reserved

Copyright International Organization for Standardization
Provided by IHS under license with ISO
No reproduction or networking permitted without license from IHS
Not for Resale

1.792012e-002, 1.749185e-002, -1.232532e-002, 7.801176e-004, 2.226951e-003, 7.973945e-004, -1.209461e-002, -4.023279e-002, -4.643946e-002, 1.749330e-003, 4.743729e-002, 4.320919e-002, 1.835481e-002, 7.885955e-004, -4.564231e-003, 9.544786e-006, 1.582420e-003, 1.408554e-002, 3.347657e-002, 4.438943e-002, 3.544905e-002, 1.001774e-002, -6.771801e-003, -1.475609e-002, 2.418090e-002, 1.272857e-002, -2.703687e-002, -4.921845e-003, 5.842225e-003, 3.721818e-003, -9.252692e-003, -2.592891e-002, -2.557710e-002, 2.139248e-002, 5.850591e-002, 4.952748e-002, 2.474929e-002, -2.583088e-004, -1.653836e-002, -2.180618e-002, -1.260081e-002, 3.835499e-003, 2.671525e-002, 4.824247e-002, 5.551182e-002, 4.639306e-002, 2.981245e-002, 6.452250e-003, 1.534784e-003, 7.839833e-003, -9.763840e-003, 7.548344e-003, 1.901623e-002, 6.189722e-003, -7.693480e-003, -2.020001e-004, 2.767765e-003, 2.093621e-002, 4.095173e-002, 4.335022e-002, 2.473618e-002, 8.903810e-003, 2.569444e-003, 1.078557e-002, 1.452998e-002, 1.645497e-002, 1.796186e-002, 2.771311e-002, 3.639713e-002, 4.577725e-002, 3.942044e-002, 1.595656e-002, -1.204207e-002, -2.865575e-003, -5.977873e-003, 2.044845e-002, 5.389113e-003, -1.367022e-002, -1.807414e-002, 3.924886e-003, 1.422405e-002, 1.147153e-002, 7.784452e-003, 7.375310e-003, -1.446913e-003, -1.189521e-002, -1.282128e-002, -3.184483e-003, -4.724940e-003, -1.266128e-002, -1.492142e-002, -3.386102e-003, 3.793569e-003, 2.133537e-002, 2.249123e-002, 9.975877e-003, -4.339714e-005, -2.996749e-002, -2.740061e-002, 9.801614e-003, -1.056608e-002, -3.040574e-002, -2.629958e-002, -1.413282e-003, 7.924599e-003, 5.735399e-003, 6.604690e-003, -1.091109e-004, -3.985516e-003, 5.089868e-003, 2.169994e-002, 3.441129e-002, 3.294219e-002, 2.154456e-002, 6.386092e-003, 9.993424e-004, 5.184148e-003, 1.567896e-002, 1.481913e-002, 8.826671e-003, 3.677894e-002, -3.218705e-002, -3.391181e-002, 2.446113e-003, -7.357442e-003, -1.712630e-002, -5.542553e-003, -3.421768e-003, -5.840826e-003, -2.891618e-003, 1.332483e-002, 1.029612e-002, 2.506316e-004, 1.546082e-002, 2.266751e-002, 2.753369e-002, 2.865303e-002, 1.705499e-002, -1.205128e-003, -8.196155e-003, -3.906664e-003, 8.077446e-003, 1.634570e-002, 2.701012e-002, 9.563065e-002, 1.864978e-002, 3.633442e-003, 2.551359e-002, 1.548257e-002, 2.051217e-002, 2.481927e-002, 1.053849e-002, -6.398979e-003, -9.083350e-003, 1.110938e-002, 1.542838e-002, -1.796287e-003, -1.295771e-002, -2.836946e-002, -3.947358e-002, -3.195687e-002, -3.034402e-002, -3.348873e-002, -3.180198e-002, -2.693089e-002, 6.538575e-005, 1.930005e-002, 6.172919e-002},
{1.133116e-002, -2.405307e-002, 3.422283e-003, 9.823895e-003, 4.687057e-002, 5.595862e-002, -8.580227e-003, -5.475879e-002, -3.571534e-002, -3.755899e-002, -4.759092e-002, -5.719222e-003, -3.406219e-002, -4.798163e-002, 4.104976e-003, -4.598747e-002, -8.157313e-002, -8.285465e-002, -6.208147e-002, -6.371941e-002, 6.289492e-003, -1.649497e-002, -5.911819e-002, -4.425756e-002, 6.242132e-003, -2.705570e-002, 2.618482e-002, 1.220667e-002, 5.372745e-003, -4.980357e-002, -1.458960e-001, -1.969531e-001, -1.793969e-001, -1.123617e-001, -2.571130e-002, 1.560960e-002, -2.146368e-002, 6.125845e-003, 3.880069e-002, -1.725428e-002, -2.119928e-002, -3.145710e-002, -1.358082e-002, -5.950535e-002, 9.872944e-003, 4.003571e-003, -8.283758e-002, -1.483497e-001, -5.053299e-003, -3.461166e-002, 1.565225e-002, 2.882089e-002, 8.750404e-003, -3.204974e-002, -9.311395e-002, -1.105435e-001, -6.870480e-002, -2.388851e-003, 3.766815e-002, 7.296771e-003, -4.090679e-002, 2.909099e-002, 2.958894e-002, 2.514177e-002, 4.856471e-002, 2.604437e-002, 1.598217e-002, -3.221913e-002, -2.026545e-002, 5.034302e-002, 4.476252e-003, -6.245595e-002, 2.430554e-003, -1.994622e-002, -8.337736e-003, 1.373210e-002, 1.378587e-002, -5.243506e-003, -3.189624e-002, -2.533816e-002, 1.195952e-002, 4.115654e-002, 2.291294e-002, -6.044656e-002, -5.396451e-002, 2.942669e-002, 1.837971e-002, 6.897099e-002, 8.570594e-002, 6.173613e-002, 2.667342e-002, 3.684348e-003, -2.554715e-002, 1.444312e-002, 3.392568e-002, 1.408734e-002, 5.951064e-004, 3.999174e-003, -2.122932e-002, -2.511488e-002, 1.770054e-002, 1.455384e-002, -8.830519e-004, 8.411764e-003, 2.349555e-002, 1.101768e-002, -4.636633e-002, -8.010709e-002, -5.531144e-003, 5.118684e-003, 4.408768e-003, 7.536405e-002, 7.526486e-002, 5.716298e-002, 2.050567e-002, -1.634594e-002, -8.129440e-004, 5.072233e-003, 6.463074e-003, 7.294167e-003, 1.635940e-002, 1.781474e-002, -1.902183e-002, -6.883289e-002, -3.135307e-002, 1.340830e-002, 2.637496e-002, 3.595748e-002, 2.858028e-002, -1.088078e-002, -5.373904e-002, 2.508552e-003, 2.854658e-002, -5.209803e-002, -6.083706e-003, 7.786256e-002, 6.129105e-002, 1.779758e-002, 1.326630e-002, -1.349251e-002, -3.640869e-002, -1.699133e-003, 1.013121e-002, 1.689478e-002, 1.808059e-002, 2.007788e-002, -1.681611e-003, -6.277433e-002, -7.479645e-002, -5.053782e-002, -4.759836e-002, -5.350507e-002, -7.227226e-002, -9.086043e-002, -4.073051e-002, 5.131592e-002, 9.204986e-003, -3.914392e-002, 1.152293e-002, 5.235503e-002, 1.937449e-002, -8.783559e-003, 1.679540e-002, 2.681065e-002, -4.359237e-002, -4.263051e-002, -5.040235e-002, -4.722761e-002, 1.420948e-002, 1.059485e-002, 2.792994e-002, -1.531215e-002, -3.760275e-002, -3.325024e-002, -5.590083e-002, -7.222856e-002, -6.833477e-002, -3.316735e-002, 2.272607e-002, 4.023840e-002, 3.665144e-002, 3.583227e-002, -3.496411e-002, -8.257182e-002, -4.994437e-002, 9.945685e-003, 3.748950e-002, 4.375569e-002, 2.154386e-002, 2.202518e-002, -2.921588e-002, -8.386658e-002, 2.111406e-002, 1.129820e-003, 2.975120e-002, 3.550873e-002, 2.979922e-002, 4.253682e-002, 3.229091e-002, 2.411014e-002, 4.099232e-002, 6.641772e-002, 5.774733e-002, 2.532585e-002, 5.798702e-002, 6.906559e-002, -2.731038e-002, -7.597711e-002, -6.570903e-002, 1.712064e-003, -1.365056e-002, -1.616315e-002, 6.176359e-002, 1.067872e-001, 7.446155e-002, 2.970148e-003,

© ISO/IEC 2004 — All rights reserved


Copyright International Organization for Standardization
Provided by IHS under license with ISO
No reproduction or networking permitted without license from IHS
Not for Resale

3.500524e-002, 2.232382e-003, 1.254988e-002, 5.146158e-002, 6.139511e-002, 9.202137e-002, 1.023481e-001, 9.912580e-002, 9.663569e-002, 7.669017e-002, 4.419569e-002, 8.961829e-003, -7.528533e-003, 5.539854e-003, 2.628868e-002, -1.130621e-002, -4.042868e-002, -5.763273e-002, -4.691061e-002, -7.557985e-004, 7.565418e-002, 1.231759e-001, 1.006640e-001, 4.788790e-002, 2.726504e-002, 7.142841e-004, -9.470508e-003, 3.467440e-002, 5.207295e-002, 8.409566e-002, 1.024253e-001, 8.839144e-002, 5.031779e-002, 2.914384e-002, 2.402183e-002, 1.107110e-002, 3.198416e-003, -1.094267e-002, -5.373272e-002, -6.293026e-002, -4.171003e-003, -4.414390e-003, -2.195122e-002, -1.985476e-002, 3.213250e-002, 5.996626e-002, 4.072455e-002, 5.617800e-003, -3.868267e-003, -2.528974e-004, -2.220829e-002, 1.336047e-002, 2.507578e-002, 5.219335e-002, 7.191355e-002, 3.251431e-002, -1.550638e-002, -4.337801e-003, 2.163994e-002, 1.754200e-002, 3.629691e-003, -2.913166e-002, -7.627467e-002, -8.513829e-002, -2.207165e-002, -4.766191e-002, -9.193123e-002, -5.965814e-002, -1.088539e-002, 7.084037e-003, -2.800797e-002, -7.629826e-002, -2.880330e-002, -1.026130e-002, -3.570625e-002, -1.439662e-003, 6.546798e-004, 1.441984e-002, 1.912652e-002, -2.685802e-002, -5.074287e-002, -2.079445e-002, 9.282075e-003, 1.991721e-002, 1.857566e-002, 7.801846e-003, -6.114373e-003, -1.712097e-002, 1.689374e-002, -1.525802e-002, -5.723287e-002, -2.478281e-002, 1.249665e-002, 2.652589e-002, -3.261269e-002, -1.375074e-001, -4.742644e-002, -7.404933e-003, -2.616139e-002, 7.797662e-003, -2.495969e-003, -1.750759e-002, -2.068910e-002, -5.356108e-002, -8.082764e-002, -8.012891e-002, -5.098297e-002, -1.827866e-002, -1.842591e-003, -6.063151e-003, 2.842039e-004, 2.287177e-002, 4.875196e-002, 1.885191e-002, -3.511354e-002, -3.523314e-002, 1.915375e-002, 6.792233e-002, 9.425354e-003, -1.436739e-001, -3.290133e-002, 1.052470e-002, -5.692003e-003, 2.365711e-002, 1.469657e-002, -2.356696e-002, -2.816010e-002, -4.010018e-002, -6.677641e-002, -5.422935e-002, 5.322340e-003, 3.523855e-002, 7.898559e-003, -4.096703e-002, -3.364584e-002, 5.404299e-003, 5.150976e-002, 4.529759e-002, 1.839059e-003, -2.880182e-002, -1.774322e-002, 2.959537e-002, 2.541059e-002, -9.436085e-002, -1.716158e-002, 1.260651e-002, 1.180969e-002, 2.795308e-002, 2.784357e-002, -6.867373e-003, -1.324995e-002, -1.278058e-002, -3.368538e-002, -2.877635e-002, 3.347763e-002, 3.776334e-002, 5.471432e-003, -9.223535e-003, -2.444256e-003, 1.954156e-002, 5.641573e-002, 4.931362e-002, 1.181609e-002, -1.628202e-002, -1.495249e-002, 1.742078e-002, 8.597005e-003, -8.674550e-002, -2.700002e-002, -1.402954e-002, 1.187413e-002, 1.707352e-002, 2.133193e-002, -1.895441e-003, -1.370526e-002, -2.398397e-002, -6.605850e-002, -6.282737e-002, -3.377322e-003, 4.747805e-002, 4.669792e-002, 2.285779e-002, 4.245332e-003, 1.133388e-002, 3.125467e-002, 2.148679e-002, -1.744584e-003, -6.317848e-003, 1.051876e-002, 2.800744e-002, 1.095846e-002, -6.896961e-002, -5.137684e-002, -3.301857e-002, 1.383766e-002, -1.494447e-003, -1.345583e-002, -2.304027e-002, -3.236432e-002, -4.284036e-002, -4.627455e-002, -2.471941e-003, 5.063864e-002, 7.325716e-002, 6.581571e-002, 4.420954e-002, 3.193686e-002, 4.259865e-002, 6.059670e-002, 5.697852e-002, 3.527708e-002, 2.169456e-002, 2.784598e-002, 4.311500e-002, 3.027932e-002, -4.031637e-002, -4.084329e-002, -1.444485e-002, 1.121831e-002, -2.032879e-002, -4.551932e-002, -5.517869e-002, -4.272928e-002, -3.419652e-002, -1.279670e-002, 2.376737e-002, 4.039586e-002, 4.584794e-002, 3.497286e-002, 3.106570e-002, 4.170436e-002, 6.072055e-002, 6.740090e-002, 5.288468e-002, 2.039018e-002, -8.591912e-003, -8.946100e-003, 2.570469e-002, 3.447624e-002, -3.454073e-002, 9.990996e-003, 1.967142e-002, 2.983121e-003, -2.262954e-002, -4.290597e-002, -5.921166e-002, -3.873463e-002, -1.342078e-002, 1.431550e-002, 3.898216e-002, 4.440239e-002, 3.440408e-002, 2.284128e-002, 1.858776e-002, 3.558957e-002, 5.422937e-002, 4.729658e-002, 3.139423e-002, 2.347458e-003, -1.114523e-002, 9.535622e-003, 4.711221e-002, 3.895411e-002, -5.070152e-002, 3.541734e-003, -2.443513e-003, -1.193990e-002, -7.342121e-003, 4.577041e-003, -1.871301e-002, -1.346630e-002, 4.644852e-003, 1.663479e-002, 2.395788e-002, 2.732172e-002, 8.696313e-003, -9.210850e-003, -1.408536e-003, 3.075745e-002, 5.643731e-002, 4.645068e-002, 2.742530e-002, 7.425421e-003, 9.911095e-003, 4.029161e-002, 7.067885e-002, 3.293902e-002, -6.713993e-002, -2.617709e-002, 2.707235e-003, 2.295419e-003, 1.697387e-002, 4.964035e-002, 2.209966e-002, 2.583065e-002, 8.005979e-003, 6.305489e-003, 1.205005e-002, 1.375222e-003, -1.936010e-002, -3.302872e-002, -1.615244e-002, 1.212172e-002, 3.154863e-002, 2.824918e-002, 7.099863e-003, -9.826135e-003, 2.505054e-003, 3.486961e-002, 5.002437e-002, 6.408596e-003, -7.547617e-002, -2.050871e-002, 1.151477e-002, 3.407652e-003, 1.594987e-002, 2.683408e-002, 2.842133e-003, 3.011350e-002, 8.954872e-003, -1.184008e-002, 1.892431e-003, 4.642038e-003, -1.512569e-002, -2.606458e-002, -4.233303e-003, 1.347141e-002, 2.759052e-002, 1.955290e-002, -2.389013e-003, -2.234477e-002, -1.153323e-002, 1.443221e-002, 2.583166e-002, -4.197724e-003, -7.139264e-002, -1.504143e-002, 1.423622e-002, 4.930935e-004, -2.270984e-002, -3.574003e-002, -4.922697e-002, 5.123745e-003, 8.448350e-003, 9.009889e-004, 1.055347e-002, 1.940882e-002, 1.094167e-002, 1.269934e-003, 1.020006e-002, 2.123311e-002, 4.275041e-002, 4.862788e-002, 1.344400e-002, -1.348665e-002, -6.651208e-003, 2.012133e-002, 2.608925e-002, 1.301202e-003, -3.814663e-002},
{2.327525e-002, 2.471219e-002, 9.906221e-002, 6.855095e-002, 3.248943e-002, 3.282778e-004, -1.430809e-002, 1.092934e-002, 8.766983e-002, 6.257449e-002, -5.051298e-002, -1.260968e-001, -1.629515e-001, -7.276418e-002, -6.734550e-002, -8.128303e-002, -2.140021e-002, 2.468336e-003, -1.245891e-001, -2.267150e-001, -1.162000e-001, -9.008300e-002, -1.173251e-001, -4.471654e-002,


© ISO/IEC 2004 — All rights reserved

Copyright International Organization for Standardization
Provided by IHS under license with ISO
No reproduction or networking permitted without license from IHS
Not for Resale

1.484817e-002, -3.842845e-003, 2.939326e-002, -9.173002e-003, -8.558107e-003, 2.872406e-003, 2.066596e-003, -2.637398e-003, 6.819787e-003, 9.830183e-003, -9.153649e-003, -5.776762e-002, -7.212646e-002, -4.978818e-003, -3.833346e-002, -3.357079e-002, 2.499451e-002, 4.257026e-002, 1.699330e-004, -1.229796e-001, -8.221892e-003, 5.275060e-002, 1.800144e-002, -1.143754e-002, 8.787431e-003, -1.122601e-002, -2.733301e-002, -6.361570e-002, -3.853086e-002, 6.978929e-003, 2.914826e-002, 4.729672e-002, 6.599926e-002, 7.243796e-002, 5.904359e-002, 1.657883e-002, 1.102747e-002, 1.555048e-002, -2.098415e-002, -2.852640e-003, 6.322235e-002, 6.188152e-002, 5.670323e-002, -3.510406e-002, -9.813727e-004, 1.139516e-001, 1.234884e-001, 9.023139e-002, -1.818439e-002, -3.773012e-003, -4.485645e-002, -9.268029e-002, -7.901963e-002, -2.042134e-002, -2.469262e-003, 3.298089e-002, 6.722888e-002, 7.346764e-002, 4.099928e-002, -9.719540e-003, -3.897690e-003, 6.453229e-003, -2.255310e-002, -1.400078e-002, 5.214345e-002, 3.947307e-002, 2.026428e-002, 1.039065e-002, -5.313670e-002, 2.092999e-002, 6.956772e-002, 6.488259e-002, -2.845478e-002, -1.745773e-003, -3.225508e-002, -8.249627e-002, -8.645288e-002, -5.051223e-002, -5.667608e-002, -3.986599e-002, -1.862893e-002, -2.257336e-002, -5.609917e-002, -6.210154e-002, -5.838395e-003, 6.249510e-004, -4.476956e-002, -4.670978e-002, 2.288430e-002, 1.311272e-002, -4.462052e-002, -1.949892e-002, -2.317840e-002, -7.339958e-002, -5.401657e-002, -3.332537e-002, -1.086492e-002, 9.827864e-003, -2.420528e-003, -3.606559e-002, -2.292480e-002, 6.225763e-003, -8.231985e-003, -2.311498e-002, -2.986555e-002, -4.974085e-002, -6.098470e-002, 2.406553e-003, 4.155222e-002, -8.115628e-003, -4.541877e-002, -5.586382e-002, -9.607188e-003, 7.000223e-003, -3.248018e-002, -7.397213e-002, -1.516937e-002, 1.115802e-002, -4.765731e-002, -6.811443e-002, 9.020556e-003, 3.288154e-002, 1.651953e-002, 1.058947e-003, 2.632617e-002, 6.551296e-002, 5.804192e-002, 2.981714e-002, -9.268917e-003, -3.960846e-002, -3.945809e-003, 7.820594e-002, 1.933451e-002, -1.181727e-002, 1.419794e-002, -3.328052e-002, -4.421841e-002, -1.562587e-002, 4.576389e-002, -2.796843e-003, -3.926275e-002, 6.392444e-002, 5.366796e-002, 2.193453e-002, 1.719715e-002, 3.269755e-002, 2.669868e-002, 2.403773e-002, 4.142729e-002, 6.121704e-002, 4.888564e-002, 9.178804e-003, -3.283638e-002, -2.949252e-002, 5.438641e-002, 6.963750e-002, -4.611189e-002, -1.506682e-002, 4.175347e-002, -1.119381e-002, -3.297370e-002, -6.859269e-002, -1.152816e-002, 3.474521e-002, 2.672534e-003, 6.099930e-002, 7.318575e-002, 3.323611e-002, 1.539297e-002, 1.874280e-002, 2.691104e-002, 3.282318e-002, 4.955979e-002, 5.184575e-002, 3.106551e-002, -1.518502e-002, -4.556051e-002, 4.888653e-003, 9.383014e-002, 6.789375e-002, 5.904797e-003, 6.066711e-002, 1.156825e-002, -2.741923e-002, 9.433186e-003, 1.217124e-002, -1.804036e-002, -5.367494e-003, 4.500810e-002, 8.592345e-002, 5.886407e-002, 1.514026e-002, -3.078776e-003, -3.521760e-003, 8.362421e-003, 2.513274e-002, 5.342565e-002, 4.902669e-002, 1.828409e-002, -2.401590e-002, -3.232375e-002, 3.270228e-002, 8.901725e-002, 1.005781e-001, 4.600149e-002, 7.823822e-003, -2.716969e-002, -4.483707e-003, 1.567861e-002, -1.259172e-002, -1.936612e-002, 5.942630e-003, 5.633286e-002, 7.540602e-002, 3.781027e-002, -2.223420e-003, -2.296980e-004, -1.411062e-002, -2.924481e-003, 7.064861e-003, 5.004347e-002, 4.559829e-002, 2.687060e-003, -1.949366e-002, -1.447139e-002, 2.134877e-002, 5.209963e-002, 6.535516e-002, 4.029733e-002, -1.109130e-003, 5.709663e-003, 4.907626e-002, 4.336465e-002, 1.836421e-002, 6.176825e-002, 8.559456e-002, 7.671232e-002, 4.124471e-002, 1.282913e-002, -1.688770e-002, 2.641417e-002, 2.269171e-003, -5.728759e-003, -1.075964e-002, 4.243606e-002, 4.570562e-002, -8.222797e-003, -2.295077e-002, -1.368647e-002, 1.506890e-003, 6.388328e-003, 7.386341e-003, 1.116385e-002, 1.678054e-002, 2.592631e-002, 2.963077e-002, 1.692100e-002, 2.506223e-002, 6.820014e-002, 6.907632e-002, 3.893611e-002, 2.222039e-003, -8.940853e-003, -2.329734e-002, 2.852836e-002, 2.560977e-003, -6.743350e-003, -2.410920e-002, 1.416273e-002, 3.865395e-002, -1.446446e-002, -3.327853e-002, -1.584177e-002, -4.721519e-003, 8.511458e-003, 3.507272e-002, 7.051790e-002, 8.559458e-002, 7.933231e-002, 2.506811e-002, -4.328937e-003, 3.593142e-003, 2.533003e-002, 3.625884e-002, -2.708608e-003, -3.506943e-002, -2.247400e-002, -4.396235e-003, 1.469004e-002, 3.653219e-003, -8.818562e-003, -1.602159e-002, -1.460767e-002, 3.050072e-002, -1.190646e-002, -3.191954e-002, 1.621193e-003, 1.241375e-003, -1.282962e-002, 7.832731e-003, 3.565413e-002, 5.200688e-002, 4.096282e-002, 8.677251e-003, -1.116743e-002, 5.314497e-004, 1.281271e-002, 2.256696e-002, -8.007040e-003, -5.294519e-002, -3.380857e-002, 2.450386e-002, 1.208486e-003, 7.380628e-003, -1.627696e-002, -9.130639e-003, -2.881319e-002, 6.531112e-003, -1.233855e-003, -4.670304e-003, 5.069800e-002, 3.217690e-002, -5.093586e-002, -6.480773e-002, -2.507290e-002, 2.928600e-002, 4.498279e-002, 3.929713e-002, 3.842729e-002, 5.917704e-002, 5.355486e-002, 2.914730e-002, -1.938061e-002, -7.901111e-002, -3.484871e-002, 7.884675e-002, -8.652545e-003, -1.872245e-003, -4.972989e-003, 1.062269e-003, -2.730065e-002, -1.588813e-002, 6.197882e-003, 2.159565e-002, 6.123530e-002, 3.343815e-002, -3.106956e-002, -4.202092e-002, -2.772280e-003, 1.940913e-002, 2.740494e-002, 2.159172e-002, 8.707780e-003, 1.554429e-002, -7.234717e-003, -3.568347e-002, -7.726126e-002, -1.023752e-001, -2.585389e-002, 9.419551e-002, -8.231277e-003, 8.498942e-003, 7.337274e-003, -5.082767e-004, -1.520553e-002, -1.202694e-002, -3.494502e-005, 1.152633e-002, 4.298563e-003, -2.205063e-002, -3.219669e-002, -2.150408e-002, -7.440362e-003, 1.650659e-003, 3.734925e-003, 3.076891e-003, -2.005220e-003, 1.012603e-003, -1.101357e-002, -2.945319e-002, -4.690713e-002, -4.731654e-002, -2.940277e-003, 6.124549e-002, -

© ISO/IEC 2004 — All rights reserved


Copyright International Organization for Standardization
Provided by IHS under license with ISO
No reproduction or networking permitted without license from IHS
Not for Resale

3.795243e-003, 1.907479e-002, 7.667416e-003, -1.941557e-003, 9.932585e-003, 8.582672e-003, 1.967549e-003, -2.866112e-003, -1.107124e-002, 3.418692e-004, 2.036249e-002, 3.514787e-002, 2.964565e-002, -2.178426e-003, -4.302669e-002, -5.306692e-002, -4.723582e-002, -3.111155e-002, -1.907440e-002, -1.360045e-003, 1.693455e-002, 3.623984e-002, 4.116113e-002, 3.808058e-002, -3.264578e-003, 1.730900e-002, -5.604291e-003, -1.910691e-002, 1.396309e-002, 2.454526e-002, 2.381466e-003, -2.105553e-002, -2.201556e-002, -6.479463e-003, 2.403954e-002, 4.097751e-002, 2.855560e-002, -8.453094e-003, -5.682538e-002, -7.560242e-002, -6.423605e-002, -4.745604e-002, -2.685621e-002, 6.086823e-003, 3.548502e-002, 4.817768e-002, 2.966833e-002, -8.443690e-003, -1.794402e-002, -5.281369e-004, -2.350231e-002, -3.679266e-002, 7.681289e-003, 3.747934e-002, 7.574172e-004, -2.800793e-002, -3.004514e-002, -1.740405e-002, 1.103812e-002, 3.153571e-002, 1.545057e-002, -1.563914e-002, -4.332015e-002, -5.117813e-002, -3.856515e-002, -1.544749e-002, 1.635115e-002, 4.117790e-002, 4.862012e-002, 3.897344e-002, 4.045493e-003, -4.733388e-002, -1.130688e-002, -1.007501e-003, -1.400303e-002, -1.542491e-002, -1.685832e-002, 2.489049e-002, 5.116783e-003, -2.922509e-002, -2.345251e-002, -5.252086e-003, 1.653923e-002, 2.955086e-002, -8.842535e-003, -6.342400e-002, -9.908376e-002, -1.017495e-001, -8.764664e-002, -5.682248e-002, -1.353867e-002, 1.857141e-002, 3.170742e-002, 3.567970e-002, 8.118980e-004, -5.426927e-002, 1.599490e-002, 2.528258e-002, 8.030117e-003, 2.136403e-002, -1.677929e-002, 1.303259e-002, 2.592360e-002, -9.809193e-003, -7.736138e-003, 2.989753e-002, 3.986012e-002, 3.687154e-002, 2.050710e-002, -1.258844e-002, -3.588556e-002, -3.881033e-002, -2.624070e-002, -1.580400e-002, 5.608805e-003, 2.533564e-002, 3.974514e-002, 4.848634e-002, 1.681519e-002, -2.694530e-002, 8.339093e-003, 2.498124e-002, -8.339497e-003, 9.295834e-003, -2.430734e-003, -5.450845e-003, 1.596824e-002, -1.041710e-002, -1.037454e-002, 2.988851e-002, 3.089763e-002, 7.607320e-003, 9.545014e-003, 1.221761e-002, 5.451402e-003, 2.735924e-003, 5.570154e-003, -2.751558e-003, -4.187270e-003, -5.928495e-003, 4.979525e-003, 3.030682e-002, 2.869683e-002, 4.610197e-003, -4.109917e-002, -1.400083e-002, -4.686162e-002, -1.679345e-002, -2.961328e-003, -4.149486e-002, -3.100398e-002, -4.251996e-002, -4.678964e-002, -1.593039e-002, -2.224783e-002, -6.836786e-002, -8.852750e-002, -8.848538e-002, -8.570093e-002, -8.398267e-002, -9.002938e-002, -9.512426e-002, -1.037011e-001, -1.038323e-001, -6.699781e-002, -1.616548e-002, 1.017544e-003, -5.435633e-004},
{6.524347e-002, 5.580145e-002, 5.515648e-002, -2.891298e-002, -2.372656e-002, -4.636461e-002, -6.891796e-002, -1.232141e-002, 5.864784e-002, -2.035418e-002, -1.599881e-001, -2.077010e-001, -1.714680e-001, -3.013608e-002, 6.411400e-002, 5.553227e-002, 8.284616e-002, 7.649269e-002, 7.796984e-002, -7.341472e-002, -1.527997e-001, -1.493674e-001, -9.177873e-002, 1.505122e-002, 1.608244e-002, 1.148551e-002, 3.594819e-002, -2.325144e-003, 1.993824e-002, 2.014615e-002, 3.363484e-002, 9.351242e-002, 1.364809e-001, 1.081709e-001, 5.105853e-002, -1.199864e-004, -2.437444e-002, 5.443740e-002, 2.027158e-002, -6.893160e-003, 3.745020e-002, 3.926191e-002, 8.772428e-002, 4.615294e-002, -1.250132e-002, 3.664073e-004, 3.622584e-002, 7.190399e-002, -3.366281e-002, -1.823067e-002, -1.820974e-003, -5.780629e-003, 6.093140e-003, 1.988084e-003, 1.189866e-002, 7.405217e-002, 1.145633e-001, 1.096049e-001, 8.847738e-002, 5.382909e-002, 2.968848e-002, 2.815179e-002, -5.223586e-002, -6.093571e-002, -8.220770e-003, -2.137975e-002, 1.353535e-002, 4.667211e-002, 2.205532e-002, 3.164456e-002, 4.422357e-002, 5.852865e-002, -3.650405e-002, -3.306182e-002, -4.329531e-002, -3.211883e-002, -3.958745e-002, -6.233846e-002, -7.096674e-002, -2.291008e-002, 2.072198e-002, 3.254691e-002, 3.405058e-002, 2.647904e-002, 1.814395e-002, -1.903917e-002, -8.387891e-002, -6.737201e-002, -1.378430e-002, -4.348149e-002, -5.186760e-002, -2.885879e-003, -5.959678e-003, -1.141678e-002, -3.064449e-003, -7.424280e-003, -1.848976e-002, -2.150266e-002, -5.619957e-002, -7.722447e-002, -7.022526e-002, -9.796841e-002, -1.201006e-001, -9.891653e-002, -5.926880e-002, -2.417231e-002, 1.155675e-002, 1.928616e-002, -1.403504e-002, -3.507827e-002, -5.480507e-002, -3.001536e-002, 2.390644e-002, -2.411650e-003, -4.595587e-002, -4.293730e-002, 1.726689e-003, 1.033131e-002, -1.266147e-002, -3.074559e-002, 5.928455e-003, -8.513423e-004, -3.012595e-002, -7.594086e-002, -6.621839e-002, -6.051382e-002, -4.927132e-002, -1.855813e-002, 2.848820e-002, 7.308686e-002, 8.283993e-002, 1.512576e-002, -1.940810e-002, 1.691675e-002, -4.809563e-003, -2.252881e-002, 2.815618e-002, 1.976493e-002, 1.148051e-002, -7.883235e-003, -2.989203e-002, 5.410931e-002, 8.727327e-002, 6.384800e-002, 3.076139e-002, 2.252652e-002, -5.106680e-003, -4.432907e-002, -3.274017e-002, -1.644798e-002, 7.369878e-003, 4.665519e-002, 7.104803e-002, 7.784578e-002, 4.920436e-002, 5.606880e-004, 2.034411e-002, 3.542206e-002, -2.719302e-002, -7.493950e-002, -2.376030e-002, -3.716603e-002, -3.511154e-004, 4.355688e-002, 9.501975e-003, 1.302032e-002, 6.139931e-002, 7.937072e-002, 2.799834e-002, 2.569765e-002, 1.628440e-002, -5.915709e-003, -7.972321e-003, 1.042342e-002, 2.721943e-002, 3.814703e-002, 2.990758e-002, 9.615935e-003, 3.198239e-002, 3.844462e-002, -5.698214e-003, 2.512116e-002, 4.308043e-003, -1.329460e-003, 3.369279e-002, -3.252929e-002, -8.414802e-003, 3.199174e-002, 6.591197e-002, 2.309599e-002, -7.994908e-003, 1.960599e-002, 9.758783e-003, -2.385911e-003, 2.879448e-002, 2.419039e-002, 1.366412e-002, 2.279006e-002, 2.229981e-002, 3.057598e-003, -2.909828e-002, -1.102659e-002, 5.250099e-002, 7.788731e-003, -4.853093e-002, 2.984456e-002, 3.300311e-002, 5.927849e-002, 7.949868e-002, 3.096146e-003, 5.181548e-003, -2.709674e-003, 3.308938e-002, 2.091295e-002, -3.168927e-002, -3.382711e-002, -


© ISO/IEC 2004 — All rights reserved

--`,,```,,,,````-`-`,,`,,`,`,,`---
Copyright International Organization for Standardization
Provided by IHS under license with ISO
No reproduction or networking permitted without license from IHS
Not for Resale

1.287051e-002, -4.453871e-002, 1.174367e-002, 4.352322e-002, 2.343014e-002, 2.267391e-002, 9.821982e-003, -3.276473e-002, -5.821343e-002, -8.010444e-003, 1.485442e-002, -3.429869e-002, -3.250940e-002, -8.993006e-003, -1.785452e-002, 5.166782e-002, 6.326292e-002, -6.045201e-002, -4.216034e-002, 2.300771e-002, 1.510576e-002, -2.247405e-002, -3.878054e-002, -5.044612e-002, -2.238509e-003, -5.184227e-002, -1.775501e-002, 3.776472e-002, 1.951813e-002, 8.503465e-003, -9.427335e-003, -4.594876e-002, -5.121349e-002, -3.548809e-002, -4.805095e-002, -1.865124e-002, 5.172694e-002, 5.246241e-002, -8.741815e-003, 1.702877e-002, 7.433147e-002, 1.153023e-002, 2.920200e-002, 6.505051e-002, 2.310646e-002, -4.054828e-002, -4.450439e-002, -3.590288e-002, 1.091208e-002, -3.185471e-002, -3.511216e-002, 1.218497e-002, 1.217256e-002, 2.195037e-003, -1.317119e-002, -2.178596e-002, -3.580947e-002, -6.985083e-002, -6.999795e-002, -1.633753e-002, 2.679544e-002, 6.003448e-003, -5.791810e-002, -6.241252e-002, 1.102327e-002, -6.399403e-003, 1.811796e-002, 2.812815e-002, -4.514291e-003, -4.267484e-002, -4.055534e-002, -1.569303e-002, 1.575238e-002, -7.171750e-003, -1.732455e-002, -5.253739e-003, 1.328165e-002, 1.311335e-002, 2.647945e-002, 3.438503e-002, 5.000109e-004, -5.946559e-002, -5.887942e-002, -2.463684e-002, 2.045529e-003, 4.089296e-004, -3.133043e-002, -3.865777e-002, -5.643365e-003, -8.833023e-003, -5.495023e-003, 4.613801e-003, -1.197402e-002, -2.422192e-002, -1.854188e-002, 7.618185e-004, 1.001193e-002, 1.580066e-002, 2.391093e-002, -1.065895e-003, 1.035675e-002, 3.136562e-002, 5.847201e-002, 7.452454e-002, 3.377314e-002, -2.157755e-002, -5.224970e-002, -6.442460e-002, -4.181404e-002, -1.580365e-002, -1.421534e-002, -2.294126e-002, -4.615027e-002, -3.669369e-002, -3.220516e-002, -3.436750e-002, -4.984790e-002, -5.181298e-002, -3.818779e-002, -3.313980e-003, 1.518958e-002, 2.387558e-002, 5.431366e-002, 1.213622e-002, 5.438571e-003, 4.045729e-002, 6.566169e-002, 7.916355e-002, 6.780427e-002, 3.297251e-002, -1.101935e-003, -8.729374e-003, 1.380619e-003, 8.982873e-003, -1.993337e-002, -4.349898e-002, -9.614520e-002, -6.938560e-002, -2.689940e-002, 2.887061e-003, 1.274069e-002, -8.201589e-003, -3.151816e-002, -5.014166e-003, 2.701564e-002, 7.972531e-004, 4.281589e-002, 2.134953e-002, 1.861257e-003, 3.262743e-002, 4.187983e-002, 2.494380e-002, 4.071044e-002, 6.655928e-002, 4.707895e-002, 2.909705e-003, -1.494989e-002, -3.111538e-002, -5.077170e-002, -5.275833e-002, -7.657485e-002, -6.039627e-002, -3.735406e-002, -7.586816e-004, 2.544760e-002, 1.135835e-002, -1.375752e-002, -4.718394e-003, 1.025070e-002, -1.490696e-002, -2.011504e-004, 2.007844e-002, -5.076800e-003, 2.346438e-002, 9.248168e-004, -3.945190e-002, -6.604044e-003, 5.449178e-002, 6.897505e-002, 3.954820e-002, -1.012043e-002, -5.653623e-002, -8.204359e-002, -8.513916e-002, -7.215754e-002, -5.772081e-002, -3.126633e-002, 1.368861e-002, 5.379384e-002, 4.781833e-002, 1.703303e-002, 4.441932e-003, -2.562347e-002, -1.157682e-002, -3.833428e-002, 1.030823e-002, -4.196236e-003, 1.093805e-002, -2.452385e-003, -4.332212e-002, -2.947168e-002, 1.365000e-002, 5.000934e-002, 5.019077e-002, 2.268507e-002, -1.718862e-002, -4.484768e-002, -4.491321e-002, -3.386331e-002, -2.334364e-002, -7.842242e-003, 1.027078e-002, 2.858156e-003, -2.455934e-002, -2.270393e-002, 1.165342e-002, -5.736845e-002, 3.864882e-003, -2.172317e-002, -5.708224e-003, -3.962399e-003, 5.227223e-003, 1.771239e-002, -9.155053e-003, -2.894050e-002, -2.458318e-002, -2.096185e-003, 1.159275e-002, 6.068034e-003, 1.292801e-003, -2.505898e-003, -1.025922e-002, -1.816544e-002, -1.578362e-002, -9.575073e-003, -5.163742e-003, -1.417097e-002, -3.493333e-002, -1.620423e-002, 3.802987e-002, -5.506926e-002, 3.110777e-002, 2.380716e-002, -2.501665e-002, -2.062985e-003, -9.385806e-004, 2.801691e-002, 1.379415e-002, -1.929324e-002, -2.686074e-002, -1.943921e-002, -5.312081e-003, -2.905779e-003, 3.815361e-003, 1.043786e-002, 1.404764e-002, 1.196308e-002, 5.461983e-003, 7.299465e-003, 6.781449e-003, -5.679674e-003, 1.529475e-003, 2.738264e-002, 5.228154e-002, -3.559859e-002, 2.648929e-002, 1.781120e-002, -1.008050e-002, -8.610158e-003, -1.044548e-002, 2.047014e-003, 8.831944e-003, -1.642722e-002, -1.871209e-002, -1.606189e-002, -9.093208e-003, 2.004686e-003, 1.980889e-002, 4.764968e-002, 7.292148e-002, 7.405602e-002, 4.922352e-002, 2.317870e-002, 8.197567e-003, -8.632868e-003, 4.602363e-003, 2.528859e-002, 2.192350e-002, -5.783620e-002, -9.203933e-003, -2.945367e-002, -8.888139e-003, -1.508811e-002, -1.785804e-002, -2.986218e-002, -3.523521e-002, -3.326973e-002, -2.419574e-002, -2.140694e-002, -1.933935e-002, -1.776373e-002, -6.743388e-003, 2.357242e-002, 5.267310e-002, 5.063707e-002, 1.103023e-002, -2.172549e-002, -2.978224e-002, -2.912131e-002, -2.271336e-002, -1.372090e-002, -2.851209e-002, -4.738939e-002, 3.445255e-002, -2.283082e-002, -1.145680e-002, -1.401291e-002, -6.784347e-003, -1.170635e-002, -3.143639e-002, -2.997630e-002, -1.494037e-002, -1.030603e-002, -6.063952e-003, -2.157061e-003, 1.111271e-002, 2.689819e-002, 3.979093e-002, 3.211434e-002, -1.391546e-003, -2.368832e-002, -2.868314e-002, -2.044782e-002, -1.774502e-002, -3.292874e-002, -4.067733e-002, -1.107808e-002, 6.892422e-002, -2.783768e-002, -2.837232e-002, -5.275843e-004, 3.689971e-002, 6.259634e-002, 4.734468e-002, 3.173318e-002, 2.787149e-002, 3.698138e-002, 5.250364e-002, 6.373496e-002, 8.508131e-002, 9.852439e-002, 1.040796e-001, 9.614467e-002, 7.444302e-002, 5.259658e-002, 3.355889e-002, 2.935313e-002, 2.404758e-002, 8.512275e-003, 1.920945e-002},
{8.520957e-004, -4.683935e-002, -6.744836e-002, -1.710147e-002, -2.961099e-002, -8.445313e-002, -1.015309e-001, -5.712116e-002, 2.840210e-003, 2.136076e-002, -2.291006e-002, -5.915669e-002, -1.163511e-001, -1.107114e-001, -2.356846e-002, -8.238751e-002, -8.256288e-002, 1.498922e-003, -1.765833e-002, -9.847479e-002, -3.589222e-002, -3.264111e-002, -4.699299e-002, -3.474105e-002, -

© ISO/IEC 2004 — All rights reserved


Copyright International Organization for Standardization
Provided by IHS under license with ISO
No reproduction or networking permitted without license from IHS
Not for Resale

1.070666e-003, -1.751452e-002, -5.711939e-002, -3.492522e-002, -5.717960e-002, -1.013576e-001, -1.165287e-001, -7.511252e-002, -2.731190e-002, 8.454344e-003, 2.122803e-002, 1.001191e-002, -1.115624e-002, 2.608129e-002, 1.620353e-002, -8.926587e-002, -7.448146e-002, -6.932483e-003, 1.520673e-002, -2.127053e-002, 2.511839e-002, 1.331196e-002, -4.278567e-002, -9.015206e-002, -3.154596e-003, 1.048515e-002, -1.104333e-002, -2.654317e-002, -4.090532e-002, -6.342437e-002, -5.917641e-002, -5.872570e-003, 4.905057e-002, 8.526858e-002, 9.661261e-002, 8.432102e-002, 7.160070e-002, 9.003603e-002, 1.066282e-002, -1.007484e-001, -6.591427e-002, -5.380055e-003, -1.044798e-002, 3.962334e-002, 8.221381e-002, 8.250881e-002, 5.607621e-002, 3.425522e-003, -1.276858e-002, 2.493484e-002, 3.772239e-002, 9.196259e-003, -1.321069e-002, -3.432899e-002, -2.515540e-002, 1.834210e-002, 6.466585e-002, 9.687465e-002, 1.061312e-001, 8.726406e-002, 7.417740e-002, 6.449871e-002, -1.061405e-002, -8.752983e-002, -4.925687e-002, 1.002641e-002, -5.092201e-002, 1.613395e-002, 8.756764e-002, 1.029825e-001, 7.203413e-002, 3.604085e-002, -2.234627e-002, 2.915356e-002, 4.972631e-002, 4.995242e-002, 3.873757e-002, 4.485247e-003, -6.764486e-003, 1.639790e-002, 4.617049e-002, 7.102606e-002, 6.981302e-002, 2.725362e-002, -1.602684e-002, 1.841064e-002, -4.180212e-003, -5.078261e-002, -3.497966e-003, 5.448884e-002, -4.327292e-002, -8.497049e-002, 3.007827e-002, 9.781740e-002, 9.115355e-002, 6.037184e-002, -1.589236e-002, 1.264969e-002, 3.550341e-002, 3.557196e-002, 5.917880e-002, 5.374599e-002, 5.683405e-002, 7.679450e-002, 9.115392e-002, 7.603079e-002, 2.022126e-002, -5.686711e-002, -6.394283e-002, 3.415697e-002, 2.953610e-002, -1.968853e-002, 2.436595e-002, 9.906757e-002, 3.135743e-002, -1.015842e-001, -9.431585e-002, 1.369654e-002, 8.688349e-002, 9.823990e-002, -5.068879e-003, 9.879635e-003, 8.694293e-003, -1.518952e-002, 1.913579e-003, 1.253759e-002, 1.824483e-002, 3.316397e-002, 2.768902e-002, -8.967693e-003, -4.950759e-002, -6.205939e-002, -4.764612e-002, 3.279297e-002, 2.495546e-002, 2.164990e-003, 2.568729e-002, 6.646558e-002, 4.085028e-002, -5.291623e-002, -1.062971e-001, -8.239061e-002, -3.971423e-002, -6.547973e-003, 1.534238e-002, 1.501273e-002, 8.444578e-004, -3.237559e-002, -3.876481e-002, -4.043548e-002, -4.805258e-002, -4.684806e-002, -4.876417e-002, -4.609458e-002, -1.917704e-002, 8.424481e-003, -2.776379e-002, -4.837994e-002, -2.228630e-002, 4.287087e-002, 5.094502e-002, -1.643057e-003, -5.609727e-002, -2.575686e-002, -7.688394e-003, -2.866770e-002, -5.625839e-002, -6.764123e-002, 1.415241e-002, 1.432215e-002, -1.246608e-003, -2.201724e-002, -3.581612e-002, -3.328504e-002, -4.130067e-002, -3.921124e-002, -2.441076e-002, -1.092264e-002, -1.473878e-002, -9.595673e-003, -1.735276e-002, 1.159023e-002, 3.854727e-002, 1.282751e-002, -1.034949e-002, 3.923440e-003, 3.788113e-002, 6.109332e-002, 4.287277e-002, 1.544264e-002, 5.191301e-003, -2.115964e-002, -5.012447e-003, -9.533603e-003, -1.296454e-002, -1.954129e-003, -8.776992e-003, 1.422456e-002, 1.584271e-002, 1.108082e-002, 1.250989e-002, -1.764590e-002, -7.632629e-002, -8.805924e-002, -5.927027e-002, 3.961183e-004, 1.709051e-002, 7.669890e-003, 1.496846e-003, 1.983063e-002, -2.175588e-002, -5.895713e-002, -6.985640e-002, -4.200994e-002, 1.386053e-002, 2.654056e-002, -9.954961e-003, -1.974746e-002, -2.688983e-002, 2.992189e-003, 1.546035e-002, 4.995910e-002, 6.081187e-002, 4.317290e-002, 1.362130e-002, -5.727544e-002, -1.157327e-001, -1.081397e-001, -3.409715e-002, 6.517500e-002, 1.130564e-001, 1.122151e-001, 8.913196e-002, 7.915754e-002, 3.786015e-003, -8.947483e-002, -1.204033e-001, -8.401959e-002, -2.812209e-002, 1.998023e-002, 1.027418e-002, -5.252374e-003, -3.901466e-002, -3.132144e-003, 2.467326e-002, 6.053159e-002, 9.147097e-002, 6.143854e-002, 1.254530e-002, -4.848953e-002, -9.186643e-002, -9.310666e-002, -4.211591e-002, 3.363135e-002, 7.885815e-002, 7.231341e-002, 4.677668e-002, 5.434055e-002, 1.211934e-002, -3.584504e-002, -6.142426e-002, -5.298891e-002, -3.820579e-002, -5.737789e-003, 1.118909e-002, 7.678573e-003, -2.950872e-002, -1.456695e-003, 1.734476e-002, 3.848041e-002, 7.968411e-002, 5.006924e-002, 1.503486e-002, -9.153585e-003, -4.353297e-002, -6.301325e-002, -4.009665e-002, 1.101537e-004, 1.932433e-002, 9.824111e-003, 2.185564e-002, 5.309094e-002, 2.838829e-002, 1.248376e-002, 1.213903e-002, 2.532674e-002, 2.859569e-002, 1.546518e-002, -7.331973e-003, 3.072325e-003, -6.005552e-003, -2.652398e-003, 5.367024e-003, 7.447690e-003, 3.132481e-002, 1.019551e-002, 9.142154e-003, 3.939912e-002, 3.607905e-002, 8.191566e-004, -9.287946e-003, -1.027577e-002, 1.141248e-002, 6.839578e-003, 2.139914e-002, 3.628815e-002, 1.910025e-002, -6.903709e-003, -1.507808e-002, 8.596876e-003, 4.080554e-002, 2.584422e-002, -1.970360e-002, -2.109657e-002, 2.412383e-002, 3.870879e-003, -3.281192e-003, -1.946769e-002, -2.484154e-002, -4.017508e-002, -2.611082e-002, 3.059077e-002, 5.851561e-002, 3.039526e-002, -1.127219e-002, -2.515686e-002, -1.276359e-002, -1.983437e-002, -2.976082e-003, 4.674689e-003, 1.127138e-002, 3.922624e-003, -4.493132e-003, 7.435726e-003, 2.429153e-002, 1.967974e-002, -3.320389e-002, -5.265484e-002, 4.289417e-002, 2.279283e-002, -4.559729e-003, -1.966871e-002, -3.747484e-002, -4.606041e-002, -3.068248e-002, -1.830165e-002, -7.235307e-003, 2.593098e-002, 5.400343e-002, 6.111178e-002, 3.256135e-002, -2.412344e-003, -7.380950e-003, -6.916745e-003, -4.993355e-003, -1.046929e-002, -2.466959e-002, -8.253371e-003, 2.339855e-002, 2.726617e-002, -1.888865e-002, -2.142258e-002, 5.818914e-002, 3.100032e-002, 7.543919e-003, 7.997494e-003, -1.349565e-002, -1.427184e-002, 9.862380e-003, 1.323497e-002, 9.956850e-003, 2.588607e-002, 4.385294e-002, 4.848837e-002, 2.222722e-002, -1.122377e-002, -2.303617e-002, -1.082945e-002, 2.905939e-003, 1.223567e-002, 2.154017e-002, 2.536504e-002, 1.846097e-002, 1.672870e-002,


© ISO/IEC 2004 — All rights reserved

Copyright International Organization for Standardization
Provided by IHS under license with ISO
No reproduction or networking permitted without license from IHS
Not for Resale

6.566649e-003, 2.693219e-002, 6.388876e-002, 8.864787e-003, 5.503208e-003, 3.550178e-002, 2.464241e-002, 6.956122e-003, 1.312652e-002, 1.141287e-002, -5.944889e-004, 7.072512e-003, 1.233440e-002, 1.533511e-002, 3.333594e-003, -1.984400e-002, -2.042481e-002, -7.000393e-003, 1.313119e-002, 1.968494e-002, 1.878794e-002, 1.208453e-002, -3.041553e-003, 1.752758e-003, 4.556930e-003, 3.064518e-002, 4.759063e-002, -3.575592e-002, -3.157124e-002, 3.769941e-002, 4.281225e-002, -6.494050e-003, -1.094109e-002, 2.368648e-002, 4.227040e-002, 5.738106e-002, 4.809207e-002, 1.750688e-002, -9.233778e-003, -3.381584e-002, -4.008712e-002, -1.603970e-002, 2.759285e-002, 6.584998e-002, 6.236474e-002, 3.182739e-002, 1.803640e-003, 2.073059e-002, -2.049430e-002, -1.705601e-002, -9.182422e-003, -6.275072e-002, -5.148854e-002, 1.090363e-002, 2.658929e-002, -2.912640e-002, -3.786815e-002, 4.079840e-003, 2.350339e-002, 3.931344e-002, 4.662364e-002, 1.038566e-002, -5.229825e-002, -8.401609e-002, -8.392452e-002, -5.457971e-002, -3.782346e-003, 3.443844e-002, 2.241906e-002, -1.384364e-002, -1.672899e-002, 3.346815e-002, -2.148324e-002, -2.467237e-002, -1.124770e-002, -1.582900e-002, 6.843148e-004, -8.023202e-003, 5.201394e-003, -2.518052e-002, -2.559093e-002, 3.582770e-003, 1.489552e-002, 1.664260e-002, 1.853047e-002, 1.137658e-002, -2.148580e-002, -3.427281e-002, -2.827247e-002, -1.155102e-002, 9.836917e-003, 1.089682e-002, -2.138440e-002, -3.912868e-002, -9.459382e-004, 5.334495e-002, 4.924481e-003, 2.117085e-002, 7.427209e-003, 1.505608e-002, 2.348496e-002, -1.491973e-002, -4.529429e-003, -9.820273e-003, 8.612398e-003, 2.527929e-002, 1.667333e-002, 4.465431e-003, -7.402182e-003, -7.118106e-003, -6.931547e-003, -6.849542e-003, 1.764592e-003, 1.418579e-002, 2.253440e-002, 3.051463e-003, -2.392381e-002, -1.911681e-002, 2.787577e-002, 5.036946e-002, -1.369447e-002, 3.164249e-002, 1.974546e-002, -1.392968e-002, 8.848702e-003, -1.568094e-002, -2.434432e-003, -3.859773e-003, 1.273143e-003, 1.006730e-002, 3.442830e-003, 4.531898e-004, -2.120543e-002, -2.943728e-002, -3.008764e-002, -3.590092e-002, -1.979561e-002, 6.052680e-003, 2.143461e-002, 6.932894e-003, -9.933583e-003, -6.742298e-003, 4.247146e-003, -1.996619e-002, -4.142726e-002, 4.941769e-002, 3.410259e-002, -1.027830e-002, 9.793040e-003, 2.256410e-003, 2.555820e-002, 2.816506e-002, -2.886296e-003, -2.750777e-002, -3.019194e-002, -1.774804e-002, -2.669018e-002, -3.018436e-002, -4.325324e-002, -4.274629e-002, -2.325058e-002, 2.971353e-003, 1.443869e-002, 6.343006e-003, -8.673598e-003, -3.443222e-002, -6.706282e-002, -1.185187e-001},
{-5.945169e-003, -5.958113e-002, -5.612654e-002, -6.680315e-002, -3.075688e-002, 3.619154e-002, 4.682413e-002, 2.777771e-003, -4.987255e-002, -1.404914e-002, 7.010591e-002, 1.315135e-001, 1.722835e-001, 1.679859e-001, 7.918182e-002, 9.853691e-002, 7.258527e-002, 6.416430e-002, 1.398781e-001, 2.167950e-001, 2.547600e-001, 1.283381e-001, -7.037510e-003, -1.225055e-001, 3.659724e-002, -1.344443e-002, -1.221964e-002, -3.647820e-002, -1.567898e-002, 2.324864e-002, 4.694491e-003, -6.608242e-002, -1.186476e-001, -1.091349e-001, -4.426209e-002, 4.044512e-002, 8.924444e-002, 8.015630e-002, 5.435783e-002, 8.295196e-002, 4.110000e-002, 2.222092e-002, 6.255080e-002, 7.781131e-002, 1.262709e-001, 3.722301e-002, -7.966970e-002, -1.440587e-001, 4.736460e-002, 7.054981e-003, 1.664868e-002, -1.883659e-003, 4.029380e-005, 4.988687e-002, 3.859781e-002, -2.307875e-002, -6.556744e-002, -5.627229e-002, -1.884460e-002, 6.852355e-003, -1.764823e-003, -1.889518e-002, 2.691721e-002, 2.912027e-002, -1.036168e-002, -2.270713e-002, -5.168596e-003, -5.561835e-003, -3.455232e-002, -3.767350e-002, -8.174068e-002, -1.241378e-001, 2.707970e-002, 1.568285e-002, 2.456123e-002, 9.825458e-003, -1.123933e-003, 5.311247e-002, 6.440554e-002, 2.836049e-002, -1.380440e-003, 3.024596e-003, 1.251982e-002, -2.023802e-002, -7.831848e-002, -4.947197e-002, -8.206445e-003, -1.529595e-002, -3.512089e-002, -3.316415e-002, -3.884984e-002, -1.842955e-002, -3.856305e-002, -7.081163e-002, -6.799693e-002, -7.330350e-002, -8.202563e-003, 2.065474e-003, 3.595899e-002, 1.116108e-002, -2.683151e-002, 1.549202e-002, 4.542932e-002, 4.232818e-002, 3.143519e-002, 2.349856e-002, -3.084069e-003, -7.128614e-002, -8.581130e-002, -4.863044e-002, -2.010029e-002, -6.504691e-003, -1.472078e-002, -3.613266e-003, -2.803881e-002, -4.443938e-002, -1.694267e-002, 6.726762e-004, -2.310446e-002, -3.336405e-002, -4.399738e-002, -2.326388e-003, 1.926561e-002, 1.117851e-002, -3.817142e-002, -2.707149e-002, 1.103949e-002, 2.671250e-002, 2.946476e-002, 1.253122e-002, -2.740418e-002, -3.662738e-002, -3.335299e-002, -4.274700e-002, -9.274122e-003, 1.265102e-002, 1.502048e-002, 2.920204e-002, 9.925924e-004, -5.465778e-002, -7.383594e-002, 2.139126e-003, 4.428719e-002, 3.709820e-002, -5.774340e-002, -3.336496e-003, 7.575110e-004, -3.637000e-003, -5.331554e-002, -6.055285e-002, -3.046506e-002, -1.226787e-002, -1.329199e-002, -3.539420e-002, -4.250465e-002, 1.749148e-002, -1.020890e-002, -4.046888e-002, -1.350879e-002, 4.121077e-006, 1.596250e-002, 2.522117e-002, -8.350068e-003, -5.071214e-002, -9.906602e-002, -7.373272e-002, -8.009074e-003, 1.360449e-002, -2.222675e-002, 8.142875e-003, -1.201359e-002, -1.086484e-002, -5.710331e-002, -8.594716e-002, -7.524456e-002, -6.514728e-002, -6.553505e-002, -6.050141e-002, -2.694090e-002, 2.006068e-002, -2.367291e-003, -3.180229e-002, -3.495132e-002, -4.145692e-002, 1.437827e-003, 3.051246e-002, -1.348354e-002, -3.609523e-003, -1.215205e-003, -4.835601e-002, -6.123387e-002, -4.451295e-002, 5.038455e-003, 2.909247e-002, -1.656984e-002, -5.413644e-003, -3.012556e-002, -6.512385e-002, -6.540820e-002, -5.564644e-002, -3.998313e-002, -2.365174e-002, -1.049441e-002, 2.664749e-002, 4.389965e-002, 2.366650e-002, -2.881042e-002, -5.112400e-002, -2.540137e-002, 2.200338e-002, 2.518732e-002, 5.035976e-002, 8.353171e-002, 5.049352e-002, -2.852790e-003, -2.532928e-002,

© ISO/IEC 2004 — All rights reserved


Copyright International Organization for Standardization
Provided by IHS under license with ISO
No reproduction or networking permitted without license from IHS
Not for Resale

4.245447e-003, 3.996354e-002, -2.382940e-002, -9.362281e-003, 5.553779e-004, -2.657818e-002, -1.583086e-002, 1.093047e-002, 2.859208e-002, 2.054470e-002, 1.054524e-002, 4.747187e-002, 6.944109e-002, 3.465407e-002, 2.885701e-003, 1.370080e-002, -2.668387e-002, -3.081033e-002, -3.029026e-002, 8.161659e-003, 4.825691e-002, 7.404421e-002, 6.909915e-002, 4.265717e-002, -7.346448e-003, 2.110566e-002, -3.133297e-002, -1.778022e-002, 3.231149e-002, 1.112419e-002, 2.660054e-002, 5.907706e-002, 6.362619e-002, 3.085053e-002, 6.547850e-003, 1.900521e-002, 2.158864e-002, 1.578801e-002, 3.016088e-002, 6.065966e-002, 8.437562e-003, -7.324480e-003, 3.993314e-002, 3.767725e-002, 4.038320e-003, 1.422055e-002, 6.744132e-002, 8.614846e-002, 1.279256e-002, 3.124324e-003, -4.050137e-002, -3.533335e-002, 4.709101e-002, 3.489992e-002, 5.005792e-002, 7.440275e-002, 6.059244e-002, 1.682535e-002, -2.383612e-002, -5.526537e-002, -5.444294e-002, -3.487332e-002, 8.536864e-003, 6.183503e-002, 1.477146e-002, -1.132860e-002, 5.017959e-003, -1.596544e-002, -4.998201e-002, -5.256144e-002, 7.627931e-003, 7.529518e-002, 3.953091e-002, -5.763348e-003, -2.370951e-002, -4.359286e-002, 4.428099e-002, 4.848224e-002, 4.893853e-002, 6.367574e-002, 4.485867e-002, 2.379520e-002, -2.139749e-002, -5.659554e-002, -4.408998e-002, -1.352700e-002, 2.905892e-002, 5.240032e-002, 2.356107e-002, -8.769213e-003, -2.666742e-002, -3.854783e-002, -4.886717e-002, -5.035668e-002, -2.107188e-003, 6.687368e-002, 3.904429e-002, -3.721080e-003, 1.603853e-003, -2.358598e-002, 3.293569e-002, 4.813028e-002, 3.650597e-002, 4.612484e-002, 3.921798e-002, 3.807834e-002, 1.275219e-002, -1.308842e-002, -1.771925e-002, 1.164151e-003, 1.915255e-002, 9.141022e-003, -1.525455e-003, 2.463639e-004, -2.808889e-002, -4.372826e-002, -3.374849e-002, -1.697152e-002, 2.728693e-002, 9.132032e-002, 2.399100e-002, 3.594664e-003, 2.617206e-002, 1.439078e-002, 2.373201e-002, 3.751951e-002, 2.453492e-002, 2.721677e-002, 1.350954e-002, -2.349684e-002, -8.010742e-002, -8.529583e-002, -4.867485e-002, -1.431930e-002, 1.142710e-002, 6.809231e-003, 3.479005e-002, 5.705189e-002, 2.623403e-002, -2.522655e-002, -7.954254e-002, -8.953744e-002, -2.980997e-002, 7.466764e-002, 1.006580e-002, 1.595736e-003, 2.585495e-002, 4.144313e-002, 1.523440e-002, 2.252899e-002, 1.636448e-002, 1.956132e-002, 2.013157e-003, -6.010593e-002, -7.324067e-002, -2.228986e-002, 8.843706e-003, 2.119185e-003, -6.202325e-003, -1.155312e-002, -1.510091e-003, 1.528768e-002, 1.842929e-002, 2.994826e-003, -5.018533e-002, -9.096967e-002, -3.681345e-002, 6.851080e-002, 9.273972e-003, 1.788203e-003, 1.126559e-002, 2.606368e-002, -8.535068e-003, 9.432665e-004, 9.707675e-003, 1.152560e-002, 1.066747e-002, -8.475186e-003, -2.522988e-002, -2.606155e-002, -2.393480e-002, -1.803390e-002, 7.486652e-003, 1.439681e-002, 1.197820e-002, 2.174592e-002, 1.534210e-002, -1.233976e-002, -6.272958e-002, -7.817361e-002, -2.185942e-002, 7.082419e-002, 3.670763e-002, -1.432452e-002, -1.168152e-002, -7.362650e-003, -3.834557e-002, -1.162134e-002, -5.666836e-003, -1.189973e-002, 6.171345e-003, 1.786053e-002, 1.027063e-002, 1.948020e-004, -1.923836e-003, -4.113697e-003, 3.165764e-003, 4.943615e-003, 9.343130e-003, 1.585430e-002, 5.099996e-003, -7.532002e-003, -2.962832e-002, -4.579891e-002, -8.084407e-003, 4.989446e-002, 5.458974e-002, -2.237669e-002, -3.711139e-002, 3.908896e-003, -4.240491e-002, -1.217206e-002, -2.592417e-003, -1.911594e-002, -1.829050e-002, -4.961977e-003, 1.675759e-003, 2.607102e-003, 2.985086e-003, 3.954496e-003, 1.266302e-002, 1.910914e-002, 2.235014e-002, 3.172384e-002, 2.468575e-002, 1.386705e-002, -5.583731e-003, -2.190981e-002, -1.213494e-002, 1.870853e-002, 1.939589e-002, -2.011524e-002, -2.489935e-002, 4.212071e-002, -4.880563e-003, 1.737192e-003, 1.504249e-002, -1.908684e-002, -3.095029e-002, -1.214626e-002, 5.340766e-003, 8.286550e-003, 2.112269e-003, -6.527518e-003, -1.371175e-002, -8.428091e-003, -3.861303e-003, 1.572278e-002, 3.259007e-002, 2.572029e-002, 2.424477e-003, -1.684311e-002, -8.801726e-003, 3.917069e-003, -2.391704e-002, -9.592325e-003, 1.021096e-002, 3.275822e-002, 1.463382e-002, 9.117586e-005, 2.339487e-002, -2.418589e-002, -3.291851e-002, 4.896267e-003, 1.526466e-002, 7.582376e-003, 1.605914e-004, -9.374614e-003, -2.057113e-002, -1.999641e-002, -1.744575e-002, -7.934838e-003, 3.491573e-003, 2.365414e-003, -8.736958e-003, -7.008892e-003, -2.872524e-003, 7.294473e-003, -1.242228e-002, -2.048692e-002, 3.621847e-003, -2.967370e-002, -2.593295e-002, -2.668159e-002, 8.564432e-003, -2.742615e-002, -3.890495e-002, 1.336431e-002, 2.731819e-002, 2.633093e-003, -1.431808e-002, -7.598767e-003, 2.423603e-003, 1.455866e-002, 1.972673e-002, 1.239806e-002, -2.579676e-003, -1.916523e-002, -2.141693e-002, -5.534457e-005, 9.648368e-003, 1.181965e-002, 1.295417e-002, -4.383713e-002, -2.175786e-002, -4.357986e-002, -4.168497e-002, -1.891404e-002, 8.802863e-003, -1.174865e-002, -2.138448e-002, 1.812838e-002, 3.804107e-002, 3.089215e-003, -3.207744e-002, -1.975960e-002, 7.471577e-003, 2.438885e-002, 2.796876e-002, 1.236915e-002, -5.925955e-003, -2.354781e-002, -1.833128e-002, 4.907055e-003, 1.825324e-002, -4.033050e-004, 2.385763e-002, -2.172313e-002, 4.437641e-002, 3.444673e-002, 2.264166e-002, 2.182160e-002, 3.919575e-002, 3.043046e-002, 1.366155e-002, 3.440017e-002, 4.686406e-002, 9.597308e-003, -3.969878e-002, -5.005278e-002, -1.965357e-002, -3.729432e-003, -1.609680e-003, -4.839340e-003, -1.675550e-002, -1.617571e-002, -8.584083e-004, 1.331098e-002, 1.132303e-002, -1.032216e-002},
{-6.828832e-003, -7.990364e-002, -8.539592e-002, -4.961363e-003, 4.544936e-002, 4.837430e-002, 3.796730e-003, -3.298267e-002, -1.382477e-002, -2.368135e-002, -5.334279e-002, -9.406871e-002, -1.748072e-001, -1.966127e-001, -1.684546e-001, -6.475658e-002, -5.015910e-002, -5.181064e-002, -7.628269e-002, -1.830298e-001, -1.201830e-001, -7.407355e-002, -4.403877e-002, 2.944963e-002, -


© ISO/IEC 2004 — All rights reserved

Copyright International Organization for Standardization
Provided by IHS under license with ISO
No reproduction or networking permitted without license from IHS
Not for Resale

1.795734e-003, -1.973066e-002, -4.178061e-002, -1.895014e-002, 6.462435e-003, 3.411109e-002, 5.546881e-002, 5.974455e-002, 5.560595e-002, 5.202471e-002, 3.887095e-002, 6.473078e-003, -3.424463e-003, -1.524977e-002, -3.622968e-002, 2.782109e-002, 2.696198e-002, -1.695463e-002, 1.745629e-002, -2.224897e-002, -2.311294e-002, -6.607040e-003, 9.248889e-004, 1.952908e-002, -1.072301e-002, 2.709352e-002, 1.319667e-002, -3.435838e-002, -3.157473e-002, -5.471523e-003, 3.278582e-002, 5.491674e-002, 6.584086e-002, 5.899996e-002, 6.010762e-002, 8.925229e-002, 1.338009e-001, 8.764306e-002, 5.396587e-002, 7.377630e-002, 7.551085e-002, 1.870232e-002, 5.001176e-002, 1.163040e-001, 7.944668e-002, 4.164809e-002, 1.237296e-002, 1.841392e-002, -2.348105e-002, 4.593254e-002, 5.725972e-002, -8.019552e-003, -5.919618e-002, -5.459269e-002, -3.313900e-002, -1.328822e-002, 3.047381e-003, 2.110891e-002, 4.816520e-002, 1.002653e-001, 1.259977e-001, 6.932413e-002, 4.138900e-002, 7.064661e-002, 6.959301e-002, 2.962318e-003, 1.411294e-002, 1.162008e-001, 1.214738e-001, 7.501775e-002, 1.715075e-002, -1.542880e-002, -3.159933e-002, 5.246188e-002, 7.293192e-002, 3.382743e-002, -1.900184e-002, -3.582140e-002, -5.310986e-002, -5.375080e-002, -3.846514e-002, -1.368023e-002, 1.075916e-003, 5.800892e-003, 4.528424e-003, 7.626564e-003, -2.694940e-002, 1.274806e-002, 2.710155e-002, -2.683404e-002, -5.084186e-002, 2.766341e-002, 6.703636e-002, 6.676472e-002, 4.893801e-002, 1.273515e-002, -1.730482e-002, 1.604330e-002, 5.894253e-002, 3.049616e-002, 6.827103e-003, 2.866493e-002, 3.544157e-002, 2.764597e-002, 1.401008e-002, -2.724910e-002, -9.814585e-002, -1.093276e-001, -1.094009e-002, -1.273665e-002, -6.947239e-002, -4.126091e-002, -4.151103e-002, -7.393272e-002, -6.801095e-002, -1.697015e-002, -4.614235e-002, -2.785963e-002, 3.586934e-002, 4.479333e-002, 9.543314e-003, -2.788520e-003, 2.064958e-002, 9.640282e-003, -1.593120e-002, 3.397365e-003, 1.758692e-002, -1.246555e-003, -4.924588e-002, -1.122404e-001, -1.432646e-001, -6.410520e-002, 7.600215e-002, 4.432053e-002, -2.578014e-002, -5.195293e-002, -8.890730e-002, -6.397896e-002, 1.257639e-002, 2.052673e-002, -5.965501e-002, -1.275176e-001, -5.080988e-002, 2.967141e-003, 4.944451e-002, -4.664094e-003, 3.225464e-003, 7.508538e-003, -8.032860e-003, 4.834699e-004, 1.297841e-002, 4.405343e-003, -1.933629e-002, -2.608130e-002, -3.307815e-002, 6.157046e-003, 6.452092e-002, -2.033807e-002, -6.201156e-002, -7.157084e-002, -9.233185e-002, -4.268040e-002, 2.975003e-002, -5.699745e-003, -4.905191e-002, -9.005887e-002, -4.573032e-002, 2.596858e-003, 6.397481e-002, -1.400890e-003, -9.091807e-003, 5.896143e-003, -5.049747e-004, 1.425353e-002, 4.259663e-002, 5.948130e-002, 6.433511e-002, 6.244001e-002, 2.280739e-002, 1.810301e-002, 2.335211e-002, -2.647941e-002, 3.153092e-003, -1.857594e-002, -3.296966e-002, 2.350218e-002, 9.158703e-002, 1.245280e-002, -2.905454e-002, -2.909776e-002, -1.745032e-003, 3.165890e-002, 3.399775e-002, -2.025965e-002, -2.055509e-002, -2.129439e-003, 1.363406e-003, 1.754070e-002, 5.144919e-002, 8.694584e-002, 9.451834e-002, 6.888826e-002, 1.941589e-002, 2.791557e-002, 2.064349e-002, -7.761961e-002, -8.371915e-002, -2.294019e-002, 1.136560e-002, 1.832760e-002, 2.778094e-003, -1.107510e-002, -1.692602e-002, 1.785381e-002, 4.015307e-002, 5.199552e-002, 1.239011e-002, -3.167866e-002, -3.392970e-002, -1.629700e-002, -9.060872e-003, 1.453026e-003, 3.073263e-002, 6.812584e-002, 6.556855e-002, 3.230423e-002, 1.930516e-002, 2.500633e-002, 2.227798e-002, -1.143407e-002, 2.644270e-002, 6.090388e-002, 4.235037e-002, -2.371952e-002, -2.267968e-002, 2.055805e-004, 7.644690e-003, 4.486574e-002, 5.451202e-002, 5.490044e-002, -5.294351e-003, -2.593010e-002, -3.414520e-002, -1.980173e-002, -2.044951e-002, -1.564911e-002, -3.200864e-003, 1.500690e-002, 1.108871e-002, 2.282488e-003, 1.256806e-002, 7.434571e-003, 5.146614e-004, 1.051072e-002, 5.630134e-002, 8.256527e-002, 3.740595e-002, -4.359225e-002, -3.705260e-002, -1.007623e-002, 4.213194e-003, 4.565240e-002, 7.095754e-002, 6.143932e-002, -2.053190e-002, -2.228691e-002, -2.322949e-002, -2.640650e-003, -1.123211e-002, -2.263898e-002, -2.459976e-002, -1.989656e-002, -1.207193e-002, -5.686966e-003, -2.035168e-002, -3.482808e-002, -2.611299e-002, 1.779822e-003, 5.927489e-002, 8.420778e-002, 6.417416e-002, 2.316578e-002, -1.938016e-003, -9.008351e-003, -1.340542e-002, 1.037930e-002, 4.102133e-002, 5.077928e-002, 7.004363e-003, -1.729897e-003, 8.420787e-003, 8.343622e-003, -1.995597e-003, -1.850870e-002, -3.015737e-002, -2.708823e-002, -8.455252e-003, -1.528569e-002, -5.655764e-002, -6.934861e-002, -4.652564e-002, -3.981263e-003, 4.665500e-002, 5.181541e-002, 5.068440e-002, 2.633387e-002, 3.752762e-003, -1.864094e-002, -4.259824e-002, -5.663712e-002, -4.281196e-002, -2.101509e-002, 3.686867e-002, 2.083799e-002, 4.839373e-002, 1.125409e-002, 3.858134e-003, -1.009252e-002, -1.394902e-002, -1.696038e-002, -2.270869e-002, -4.417497e-002, -5.695632e-002, -2.053265e-002, 3.330586e-003, 2.742564e-002, 4.283641e-002, 2.411731e-002, 3.171660e-002, 1.532255e-002, 4.077837e-003, 6.702273e-003, 3.133158e-002, 2.258809e-002, -1.424100e-002, -4.793150e-002, 2.184555e-002, 1.023011e-002, 3.948110e-002, 7.960746e-003, 2.004023e-004, 2.231442e-003, 1.074069e-002, -1.922571e-002, -6.339390e-002, -6.768134e-002, -2.905135e-002, 2.372798e-002, 1.778062e-002, -2.476341e-004, 6.396952e-003, 1.681122e-002, 3.940610e-002, 2.617432e-002, 2.356956e-002, 1.772207e-002, 5.822822e-003, 1.655794e-002, 2.447175e-002, -9.112373e-003, -2.317247e-002, -1.776414e-002, 7.140599e-003, 4.069845e-003, -5.396111e-003, 1.837414e-003, 1.596061e-002, -2.452701e-002, -7.113674e-002, -5.043618e-002, 4.889846e-004, 2.971037e-002, 1.941894e-002, 1.352924e-002, 4.096170e-003, 8.555678e-003, 1.204651e-002, 9.424943e-004, -4.253886e-003, -1.672112e-003, -1.416599e-002, -2.556326e-002, -4.141283e-002, -6.091346e-002, -

© ISO/IEC 2004 — All rights reserved


--`,,```,,,,````-`-`,,`,,`,`,,`---

Copyright International Organization for Standardization
Provided by IHS under license with ISO
No reproduction or networking permitted without license from IHS
Not for Resale

5.263193e-002, -3.378084e-002, -2.563483e-002, -3.100416e-003, -1.469408e-002, -9.034110e-003, -9.966102e-004, -1.970451e-002, -4.418507e-002, -3.378520e-002, -2.006302e-002, -3.021066e-002, -3.249616e-002, -1.774269e-002, 7.722619e-003, 2.749125e-002, 1.717338e-002, -2.942049e-003, -2.290864e-002, -3.602210e-002, -3.292748e-002, -1.872628e-002, -4.888765e-002, -8.764179e-002, -4.619245e-002, -1.556255e-002, -2.365521e-002, -1.971987e-002, -2.061393e-002, -1.108800e-002, -1.272791e-002, -7.759496e-003, -8.503909e-003, 2.574897e-003, 4.617882e-003, -1.689854e-002, -3.911816e-002, -4.692659e-002, -3.617101e-002, -2.131793e-002, -1.852323e-002, -2.775570e-002, -3.903528e-002, -3.520435e-002, -9.924658e-003, 1.331535e-002, -1.651938e-002, -6.640858e-002, -2.245095e-002, 1.634712e-002, -7.756883e-004, -5.931025e-003, -4.477809e-003, 3.510424e-003, -9.480945e-003, -9.768235e-004, 1.973529e-002, 2.443436e-002, 1.238314e-002, -3.017922e-003, -1.613843e-002, -2.220170e-002, -1.054268e-002, 1.780473e-003, 1.930619e-003, -1.325919e-002, -2.901772e-002, -1.915242e-002, 1.192358e-002, 2.510579e-002, -3.456270e-003, -4.646884e-002, -1.014295e-002, 1.899087e-002, -1.848504e-003, 2.685315e-002, 1.175802e-002, 1.268571e-002, 5.671150e-003, -4.758737e-004, 1.014565e-002, 3.684586e-003, -1.623661e-002, -3.270745e-002, -3.615757e-002, -2.686455e-002, -2.455139e-003, 4.939273e-003, -1.426577e-002, -3.131620e-002, -3.427071e-002, -1.624257e-002, 6.263431e-003, 4.770892e-003, -1.100837e-002, -1.961401e-002, -8.187761e-003, -1.210439e-002, -5.083493e-002, 1.062491e-002, -1.717529e-002, -1.220893e-002, 1.719211e-004, -1.221480e-002, -9.749646e-003, -1.334941e-002, -2.155433e-002, -2.524119e-002, -2.303779e-002, 3.018362e-003, 2.457672e-002, 2.367698e-002, 5.755429e-003, -5.918333e-003, -1.893018e-003, 2.133524e-002, 3.169543e-002, 1.287060e-002, -3.465171e-003, 1.237326e-003, -2.124437e-002, -2.685849e-002, -5.001684e-002, 7.056938e-003, -2.783914e-002, -9.177565e-003, 2.213340e-002, -8.098549e-003, -1.593872e-002, 2.351779e-003, 1.290056e-002, 2.048455e-002, 5.287819e-003, 1.156127e-002, 1.823745e-002, 9.120508e-003, -9.478922e-003, -7.388768e-003, 1.139049e-002, 3.931435e-002, 4.045376e-002, 1.206662e-002, -1.251797e-003, 1.469435e-002, 4.708955e-002, 9.465764e-002, 5.079082e-002, 7.855465e-002, 2.711600e-002, 2.136673e-002, 5.195053e-002, 2.670117e-002, 1.551524e-002, 3.724410e-002, 6.333728e-002, 6.771231e-002, 4.888370e-002, 3.215333e-002, 9.767944e-003, -1.096378e-002, -1.821508e-002, -7.198713e-003, 1.604473e-002, 4.126100e-002, 2.889647e-002, 7.297615e-003, 1.244148e-002, 4.519335e-002},
{3.819508e-003, -1.780668e-002, 2.041733e-002, 1.176338e-001, 6.782917e-002, -6.510077e-003, -5.560246e-002, -9.717257e-002, -1.349932e-001, -3.396420e-002, 8.486183e-002, 1.112758e-001, 7.925734e-002, 1.935144e-003, -2.913108e-002, 5.525321e-002, 1.107315e-001, 9.842786e-002, -3.994248e-002, 3.147072e-002, 1.650297e-001, 1.292510e-001, 3.051861e-003, -1.492191e-001, 2.685864e-002, -1.511986e-002, -1.978220e-002, 5.823104e-003, -2.211554e-002, -2.066554e-002, -1.107227e-002, -1.870442e-002, -1.584579e-002, 2.723240e-002, 4.497033e-002, 1.295068e-002, -4.084495e-003, -4.243587e-002, -7.415210e-002, -3.486871e-002, 6.262780e-003, 4.585965e-002, -3.031511e-002, -7.404337e-006, 1.320094e-001, 1.155442e-001, 1.986322e-002, -8.288552e-002, 4.525184e-002, 4.475276e-003, -6.384511e-003, -5.793372e-002, -6.857252e-002, -2.803068e-002, 1.474712e-002, 3.250617e-002, 4.085171e-002, 4.212642e-002, 5.054955e-003, -2.421904e-002, 1.710743e-002, -3.256092e-002, -8.504744e-002, -8.610973e-002, -6.021523e-002, -1.471620e-002, 1.338920e-003, -1.619520e-002, 6.183522e-002, 8.482434e-002, 5.581721e-002, -6.637178e-003, 2.234377e-002, 3.223953e-003, 2.994618e-002, -2.850236e-002, -6.863724e-002, -2.481984e-002, 2.161685e-002, 3.284458e-002, 2.617184e-002, 3.309194e-003, -1.705180e-002, 1.726987e-002, 5.696071e-002, -1.444790e-002, -6.853334e-002, -7.710868e-002, -5.524116e-002, -3.671690e-002, 6.625939e-003, 3.883946e-003, -1.730804e-002, -3.431105e-003, 7.660617e-004, -1.859532e-002, 1.453497e-003, -1.433056e-002, 5.230397e-002, 5.387803e-002, -1.214890e-003, 2.532923e-003, 1.256965e-002, -6.740429e-003, -3.049906e-002, -4.033053e-002, -1.872694e-002, 6.032726e-002, 6.540983e-002, 1.936082e-002, -4.417954e-003, -1.680984e-002, -1.358331e-002, -2.617790e-003, 8.294000e-003, 2.956962e-002, -1.988569e-002, -1.072961e-001, -1.215930e-001, -1.118186e-001, -6.044060e-005, -2.576024e-002, 3.544337e-002, 9.464585e-002, 7.995648e-002, 7.204744e-002, 3.543381e-002, -1.537053e-002, -4.857568e-002, -5.675192e-002, -1.069117e-002, 4.285175e-002, 2.401768e-002, 6.320942e-003, 3.743412e-002, 1.263860e-002, -9.451608e-003, 4.534538e-002, 1.384143e-002, -3.211702e-002, 1.712008e-002, -3.664895e-002, -1.279385e-001, -1.526338e-001, -8.441787e-003, -1.746354e-002, 1.370975e-002, 5.196430e-002, 8.367309e-002, 1.069105e-001, 8.029432e-002, 4.317690e-002, 1.578667e-002, 1.329114e-004, 2.421950e-002, 3.313641e-002, -5.648247e-002, -6.799923e-002, -9.076175e-003, -2.530732e-002, -7.489127e-002, -9.976917e-003, -1.329220e-002, -1.046643e-001, -7.937023e-002, 5.111677e-002, 3.032092e-002, -3.134124e-002, -1.364790e-002, 5.263789e-003, -5.216173e-003, 1.370669e-002, 3.050881e-002, 5.719763e-002, 5.658254e-002, 3.768658e-002, 1.654980e-002, 1.651502e-002, 3.856130e-002, 1.898331e-002, -1.103062e-002, -1.943329e-002, 1.379146e-002, 2.497177e-002, -1.849871e-002, 7.789515e-003, -1.670314e-002, -5.094245e-002, -8.435296e-002, 3.055747e-002, 9.906727e-002, 4.781030e-002, -1.046356e-002, 3.001297e-002, -8.175288e-003, -2.044827e-002, -1.679182e-002, -1.084078e-003, 1.920668e-003, 2.063728e-003, 1.013188e-002, 1.799042e-002, 1.365070e-002, 1.169919e-002, 6.994355e-003, -7.084685e-002, -1.552556e-002, 5.625778e-002, -1.551928e-003, -2.269037e-002, -7.545460e-002, 1.562744e-002, 3.139110e-002, 4.155691e-002, 5.937396e-002, 4.932396e-002,


© ISO/IEC 2004 — All rights reserved

Copyright International Organization for Standardization
Provided by IHS under license with ISO
No reproduction or networking permitted without license from IHS
Not for Resale

6.798212e-003, 3.326927e-002, 8.460810e-003, -2.353770e-002, -3.773957e-002, -2.800182e-002, -2.695248e-002, -5.464215e-003, 1.488597e-002, -2.239468e-003, -1.701988e-002, 1.192730e-002, 1.223254e-002, -7.701387e-003, 3.199637e-002, 2.163493e-002, -4.643263e-002, 3.205112e-003, 1.484045e-002, 5.780442e-002, 9.157753e-002, 6.103189e-002, 1.260620e-002, 3.775425e-003, 4.003076e-003, 2.830264e-002, 2.146790e-002, -5.369252e-003, -3.016215e-002, -2.052329e-002, -1.765065e-002, 1.031321e-002, 9.705527e-003, -2.475192e-002, -3.108767e-002, -7.541099e-003, -1.014045e-002, -1.796651e-002, 2.079563e-002, -1.427911e-002, -6.315104e-002, 2.782017e-002, 3.735094e-002, 2.078237e-002, 5.249747e-002, 4.756327e-002, -1.701521e-002, -5.414739e-002, 9.518070e-004, 8.741976e-003, 1.409409e-002, 1.226386e-002, -1.924530e-002, -1.460950e-002, -9.426219e-003, -1.086404e-003, -1.902864e-002, -4.568402e-002, -4.905556e-002, -3.720176e-002, -2.243842e-002, -2.417619e-003, 4.077589e-002, 2.162824e-002, 1.053970e-003, 9.675126e-002, 6.314604e-002, 3.440531e-002, 3.681694e-002, 1.602325e-002, -4.255602e-002, -9.578139e-002, -1.338310e-002, -4.011596e-003, -2.940054e-002, 2.546862e-002, -7.750704e-004, -1.472585e-002, -2.421123e-002, -3.982470e-002, -4.924100e-002, -6.286379e-002, -6.314924e-002, -4.705202e-002, -2.285016e-002, -1.520552e-003, 2.263364e-002, -4.900413e-004, -2.116784e-003, 5.406153e-002, 4.068928e-002, 1.930245e-002, 1.166015e-002, -1.501955e-002, -5.415004e-002, -9.785827e-002, -9.013600e-003, 2.071932e-002, -6.468998e-002, -8.044052e-004, 2.668911e-003, -2.610976e-002, -5.438456e-002, -8.437321e-002, -5.366288e-002, -3.758964e-002, -2.398074e-002, -5.150287e-003, 6.101512e-003, 1.365616e-002, 4.227970e-002, 4.957484e-002, 3.301077e-002, 2.159796e-002, 1.850013e-002, 2.582763e-003, -9.249344e-003, -1.058524e-002, -1.261429e-002, -5.377500e-002, -1.551437e-002, 2.065747e-002, -7.189281e-002, -4.185917e-002, -1.787224e-003, -3.802203e-002, -7.133577e-002, -8.940705e-002, -4.527308e-002, -2.656695e-002, -2.739980e-002, -1.357164e-002, -6.986284e-003, 8.686175e-004, 1.889634e-002, 3.616186e-002, 3.746086e-002, 1.152835e-002, 1.401087e-002, 3.612755e-003, -1.679899e-002, -1.394754e-002, -1.263229e-002, -3.403470e-002, -9.662863e-004, 3.262629e-003, -8.973641e-003, -6.069576e-002, -1.019648e-002, -3.729959e-002, -4.653192e-002, -3.550830e-002, -2.230479e-002, -6.507304e-002, -4.400971e-002, 4.138480e-002, 6.333432e-002, 4.341480e-002, 1.189318e-002, -2.644044e-002, -2.840386e-002, -2.305219e-002, -3.552134e-003, 9.226307e-003, 1.004234e-003, -1.747218e-002, -4.500558e-002, -5.520879e-002, 4.751415e-002, -2.442331e-002, 5.452313e-002, -3.362865e-002, 3.310475e-003, -1.955959e-002, -4.118698e-003, 2.777829e-002, 2.275447e-002, -3.029538e-002, -2.901167e-002, -2.962048e-003, 2.486373e-002, 3.296823e-002, 1.314413e-002, -8.660999e-003, -2.442056e-002, -1.394649e-002, -7.659846e-003, -1.917140e-002, -3.770863e-002, -4.413863e-002, -4.568868e-002, -5.572717e-002, 9.249850e-002, -3.730076e-002, 7.359396e-002, 1.375870e-002, 2.846744e-002, 4.049369e-003, 1.561108e-002, 4.732479e-002, 3.852173e-002, -1.894540e-004, -9.035283e-003, 1.334416e-002, 3.100233e-002, 3.272422e-002, 2.653291e-002, 1.115173e-002, -3.019702e-003, -2.418713e-002, -5.123183e-002, -5.553995e-002, -1.702747e-002, 2.737361e-002, 3.625622e-002, -2.354410e-003, 1.006727e-001, -4.894077e-002, 2.425790e-002, 2.202104e-002, 4.294439e-002, 6.209000e-003, -8.462145e-003, 1.730613e-002, 2.842607e-002, -1.614546e-003, 5.460957e-003, 4.030654e-002, 5.636450e-002, 3.327488e-002, -6.535366e-003, -3.359428e-002, -4.482417e-002, -5.921307e-002, -5.089909e-002, -1.993150e-002, 9.586835e-003, 3.338021e-002, 3.008613e-002, 5.270358e-003, 4.861950e-002, -4.897572e-002, -7.817107e-003, -1.268293e-002, 2.794672e-002, 1.964362e-003, -3.268229e-002, -1.408779e-002, 1.331761e-002, 4.015046e-004, 4.344697e-003, 4.453477e-002, 8.147192e-002, 6.818355e-002, 1.436732e-002, -2.805119e-002, -3.795593e-002, -1.575822e-002, 2.541229e-002, 5.791140e-002, 5.550071e-002, 2.789431e-002, 9.688288e-004, 1.427408e-003, -1.378312e-002, -4.068913e-002, 3.674682e-002, -2.947983e-002, 1.074692e-003, 2.363846e-002, -2.834517e-002, -2.655221e-002, 1.305945e-002, 1.418809e-002, -3.004979e-004, 1.921885e-002, 5.095729e-002, 3.691700e-002, -1.178332e-002, -4.733488e-002, -3.632449e-002, 1.846406e-002, 6.778313e-002, 7.244806e-002, 5.264269e-002, 2.602076e-002, 1.205915e-002, 2.059463e-002, -5.471448e-003, 1.192903e-002, 8.151879e-002, 9.201220e-004, -6.197818e-003, 3.018079e-002, 7.253659e-003, -2.582173e-003, 1.985183e-002, 2.799897e-002, 7.268915e-003, -7.671853e-004, 1.099655e-002, -1.435213e-002, -5.276447e-002, -7.858982e-002, -6.145283e-002, -9.271262e-003, 2.816319e-002, 1.950428e-002, 5.963888e-003, 8.820906e-003, 2.872473e-002, 4.726101e-002, 6.869352e-003, 4.783287e-003, 2.071466e-002, -6.473697e-003, 2.150103e-002, -2.312580e-003, 1.050952e-002, 2.039346e-002, 1.581799e-002, 1.507382e-002, 1.397377e-002, 1.460007e-002, 9.086371e-003, -4.943260e-003, -1.068293e-002, -1.010116e-002, -4.999124e-003, 5.015193e-003, 2.199046e-003, -1.726250e-002, -2.248698e-002, 4.660505e-003, 4.277719e-002, 5.044757e-002, -3.255539e-002, -6.272974e-002, -7.251260e-002, -4.301029e-002, 6.572213e-003, -4.217676e-002, -3.339435e-002, -2.199639e-002, -3.101383e-002, -3.904203e-002, -2.304919e-002, 1.479239e-002, 2.745161e-002, 3.873619e-002, 5.464628e-002, 6.208822e-002, 5.123049e-002, 2.738477e-002, -5.779777e-003, -2.899685e-002, -1.721328e-002, -5.909219e-003, 1.685141e-003, -1.129410e-002},
{1.228254e-001, 9.058652e-002, 3.916584e-002, 1.169135e-001, 1.317202e-001, 8.883835e-002, 6.298564e-002, 3.278612e-002, -2.240714e-002, -2.107790e-002, 1.925442e-002, 2.511438e-002, 5.027862e-002, 5.609836e-002, 6.295110e-002, 4.048922e-002, 3.733124e-002, 7.250229e-002, 5.828237e-002, 2.996118e-002, -3.219812e-002, -2.770801e-002, 4.277464e-002, 8.901120e-002,

© ISO/IEC 2004 — All rights reserved


Copyright International Organization for Standardization
Provided by IHS under license with ISO
No reproduction or networking permitted without license from IHS
Not for Resale

5.149459e-002, 4.436059e-002, -2.717387e-002, -2.627178e-002, -3.418155e-002, -1.264519e-002, 4.189814e-002, 5.890365e-002, 3.053085e-002, -8.919903e-003, -3.334496e-002, -3.033642e-002, 4.111708e-003, 1.290407e-002, 1.967417e-002, -1.182727e-002, 9.190946e-003, 4.471804e-002, 9.161432e-003, 2.936782e-002, -5.686465e-002, -7.294572e-002, -1.868210e-002, 5.679752e-002, -2.159011e-002, 6.678263e-003, -3.792811e-002, -1.019353e-001, -1.312716e-001, -8.907817e-002, -2.816828e-002, -1.249838e-002, -3.153794e-002, -5.988666e-002, -7.076668e-002, -6.095360e-002, -3.417844e-002, -9.487994e-003, -3.923245e-002, -5.285798e-002, -1.707820e-002, 2.542523e-002, -1.773078e-003, 1.844146e-002, -1.433171e-002, -6.571575e-002, -6.197983e-002, -1.474536e-002, -4.840547e-002, -2.644478e-002, -5.697978e-003, -7.773350e-002, -1.510013e-001, -1.155901e-001, -5.727835e-002, -4.705150e-002, -5.739563e-002, -7.321988e-002, -8.337404e-002, -5.736627e-002, -1.235801e-002, -1.259061e-002, -6.777413e-002, -6.147814e-002, -1.847297e-002, 2.352187e-002, 4.251752e-003, -1.070382e-002, 1.376736e-002, -1.905544e-002, -3.225566e-002, -1.411507e-002, -3.389053e-002, -3.427013e-002, 1.555168e-002, 1.711388e-003, -7.337894e-002, -6.459296e-002, -2.639329e-002, -3.749452e-002, -5.974846e-002, -6.270051e-002, -3.828837e-002, -1.167002e-004, 1.945508e-002, -6.527917e-003, -5.488652e-002, -3.896103e-002, -1.094912e-002, 1.720194e-002, 2.398823e-002, -1.691298e-002, -1.329553e-002, 2.508076e-002, 1.857012e-002, 1.213972e-002, -1.495849e-002, -3.394304e-002, 2.148964e-002, 4.998901e-002, 1.648457e-002, 3.307764e-002, 5.825561e-002, 4.522819e-002, 3.000168e-002, 2.754316e-002, 2.896839e-002, 9.398389e-003, 1.356370e-002, 3.665000e-003, -4.069946e-002, -3.386291e-002, -3.918597e-002, -3.640496e-002, 1.668191e-002, 4.027394e-002, -3.331739e-002, 3.321155e-004, 6.627186e-002, 9.141509e-002, 1.769203e-004, -2.932064e-002, 2.639349e-003, 4.323938e-002, 4.555669e-002, 8.699974e-002, 1.291333e-001, 1.432289e-001, 1.239580e-001, 7.266887e-002, -5.041264e-003, -2.729506e-002, 5.631870e-002, 4.462134e-002, -1.565253e-002, -2.234541e-002, -5.703231e-002, -1.088500e-001, -4.269631e-002, 1.241545e-001, 3.174872e-002, -5.122796e-002, 4.963189e-002, 1.306061e-001, 1.479416e-002, -3.984968e-003, -1.343227e-002, 2.081084e-002, 1.568657e-002, 4.295552e-002, 9.108202e-002, 1.100305e-001, 6.308405e-002, -2.921210e-002, -1.070689e-001, -6.324657e-002, 5.404918e-002, 4.046222e-002, 1.070322e-002, 2.236690e-002, 6.125166e-003, -5.007675e-002, -8.662361e-002, 6.504304e-002, 5.811657e-002, -1.127526e-001, -5.257277e-002, 6.859991e-002, 1.461981e-002, 7.335460e-003, -1.255446e-002, 9.031481e-004, -1.055286e-002, 8.228087e-004, 3.166286e-002, 4.374685e-002, -2.849492e-003, -6.822802e-002, -1.001004e-001, -9.855634e-002, -8.596576e-002, -4.459030e-002, 2.998947e-002, 3.056192e-002, 3.424339e-002, 5.466071e-002, -1.759135e-002, -6.318138e-002, -4.887978e-002, -1.121181e-001, -8.682640e-002, -9.100213e-004, -1.036135e-002, 8.474072e-003, -4.185424e-003, 4.292225e-003, -1.515534e-002, -1.028010e-002, 2.311939e-002, 4.074090e-002, 2.498294e-002, 8.217307e-004, -3.827140e-003, -3.124044e-002, -7.756473e-002, -4.048430e-002, 3.555765e-002, 5.650255e-002, 5.192551e-002, 3.517383e-002, -4.804466e-002, -9.778097e-002, -7.100124e-002, -3.550701e-002, -7.729538e-003, 2.085129e-002, -2.770954e-002, -1.505515e-002, -1.157606e-002, 1.126156e-002, -6.078593e-003, -2.407854e-003, 2.644271e-002, 5.226747e-002, 6.461326e-002, 6.151265e-002, 7.386997e-002, 5.930927e-002, 1.246770e-002, -4.289062e-002, -1.057553e-002, 5.739776e-002, 8.185665e-002, -1.494370e-002, -1.326696e-001, -1.016810e-001, -2.075472e-002, 5.218905e-002, 8.364620e-002, 9.804471e-002, -3.759106e-003, -3.102915e-002, -2.765915e-002, 1.510371e-002, 7.134320e-003, -5.412353e-003, 2.652972e-002, 4.833389e-002, 3.435926e-002, 2.104257e-002, 4.294136e-002, 4.673517e-002, 1.512908e-002, -1.346204e-002, 1.024179e-002, 5.890812e-002, 1.089119e-001, 3.440549e-002, -7.011140e-002, -8.079262e-002, -2.689183e-002, 3.633760e-002, 6.081179e-002, 9.068509e-002, 4.829480e-002, -1.863748e-002, -3.598394e-002, 3.087231e-003, 2.286455e-002, 2.373619e-003, 1.509852e-002, 9.121978e-003, -5.135419e-002, -7.193224e-002, -5.165850e-002, -3.367012e-002, -3.189499e-002, -1.999148e-002, 1.437284e-002, 5.074429e-002, 8.632105e-002, 4.701094e-002, -1.557318e-002, -3.738265e-002, -2.883904e-002, -1.840516e-002, -3.545501e-002, -1.444267e-002, 8.605978e-002, 5.614750e-003, -1.169635e-002, -1.625968e-002, 1.739924e-002, 3.622447e-003, -2.159739e-004, -3.385976e-002, -9.188806e-002, -6.137640e-002, 4.233783e-003, 2.151197e-002, -9.952119e-003, -2.697665e-002, -1.192882e-002, 2.269922e-004, 8.347406e-003, -3.241761e-003, -8.078492e-003, 9.703899e-003, 3.467919e-002, 2.899381e-002, -2.358286e-002, -5.720919e-002, 6.181770e-002, -7.324818e-003, 3.377884e-002, -1.000885e-002, 1.275143e-002, -1.007908e-003, -1.703383e-002, -4.558810e-002, -4.884909e-002, 1.316936e-002, 4.213027e-002, 9.570182e-003, -2.391269e-002, -1.193533e-003, 2.003840e-002, 5.901973e-003, 3.340633e-003, -1.635360e-003, -9.084643e-003, -8.654705e-003, 2.394671e-002, 4.647663e-002, 1.600755e-002, -4.151647e-002, 3.514613e-002, -3.686167e-002, 5.821215e-002, 1.617901e-002, 9.003346e-003, -6.143265e-003, -2.271574e-002, -3.412063e-002, -1.157545e-002, 2.983787e-002, 2.786740e-002, 2.593653e-002, 1.275070e-002, 2.414396e-002, 1.788931e-002, -8.771728e-003, -1.204306e-002, -9.356861e-003, -2.258405e-003, 1.362274e-002, 3.427547e-002, 4.689058e-002, 2.208697e-002, -2.873392e-002, 3.455516e-002, -4.026335e-002, 4.626913e-002, 3.422000e-002, 4.432584e-003, -1.091646e-004, -9.408209e-003, -1.854388e-002, -1.775957e-003, 1.272463e-002, -9.221012e-003, -2.000666e-002, -1.137025e-002, 1.549450e-002, 3.162281e-002, 2.352675e-002, 8.572015e-003, -6.347411e-003, 4.510063e-003, 2.938655e-002, 4.062553e-002, 3.380616e-002, -6.410209e-004, -4.347198e-002,


© ISO/IEC 2004 — All rights reserved

Copyright International Organization for Standardization
Provided by IHS under license with ISO
No reproduction or networking permitted without license from IHS
Not for Resale

4.061097e-002, -2.446450e-002, 3.752935e-003, 2.799275e-002, -7.472694e-003, 8.341614e-003, 1.989490e-003, -2.051402e-002, -2.323536e-002, -1.965265e-002, -3.006735e-002, -2.754426e-002, -1.755221e-002, 9.995524e-003, 3.072128e-002, 2.702680e-002, 2.065769e-002, 7.376920e-003, 2.775301e-003, 1.565328e-002, 2.985256e-002, 3.018533e-002, -9.114697e-003, -5.844411e-002, 2.405789e-002, -2.059535e-002, -4.319919e-002, 2.425163e-003, -2.632000e-002, 6.662604e-003, 1.228349e-002, -2.244599e-002, -4.178440e-002, -1.388545e-002, 1.054022e-002, 1.707606e-002, 8.438691e-003, 5.403440e-003, 1.293657e-002, 1.178839e-002, 1.352312e-002, 1.145116e-002, 6.324662e-003, 1.838481e-002, 3.008214e-002, 1.906513e-002, -2.198918e-002, -5.976090e-002, -2.059475e-002, -1.985662e-002, -4.819259e-002, -9.314657e-004, -3.982744e-002, -1.426352e-002, 2.422052e-002, -6.259651e-003, -3.471813e-002, -1.680461e-002, 3.767283e-003, 1.870460e-002, 2.254234e-002, 9.476392e-003, -1.783636e-003, -1.671055e-002, -2.159089e-002, -1.096286e-002, 8.872240e-003, 2.639775e-002, 3.128562e-002, 1.570947e-002, -2.282118e-002, -4.138570e-002, -3.861461e-002, 3.530586e-003, -2.229762e-002, 2.434323e-002, -8.872120e-003, -2.670629e-002, 2.854120e-003, 1.368830e-002, -4.678589e-003, -1.649905e-002, -1.636017e-002, 5.297940e-003, 3.330311e-002, 3.915381e-002, 2.162200e-002, -2.053473e-003, -9.400944e-003, 2.296059e-004, 2.355749e-002, 3.962457e-002, 4.505234e-002, 2.010605e-002, -1.274622e-002, -1.555597e-002, -1.728949e-002, 2.109474e-002, -1.847767e-002, 2.574290e-002, 7.247552e-003, -1.318892e-002, -2.175168e-002, 3.170107e-003, 1.226850e-002, -9.219619e-004, -2.814181e-002, -2.658143e-002, -1.225613e-003, 1.284685e-002, 5.250154e-003, -1.154090e-002, -1.107119e-002, -1.047927e-002, 2.491046e-003, 2.165280e-002, 2.888958e-002, 3.319134e-003, -1.833712e-002, -6.914482e-003, -1.138946e-003, 1.346754e-002, -1.992469e-002, 1.360689e-002, -1.230274e-002, 1.505212e-003, -2.601413e-003, -5.875208e-003, 9.276975e-003, 8.442019e-003, -7.642770e-003, -2.176234e-002, -1.782935e-002, -1.846017e-002, -1.794590e-002, -2.449173e-002, -2.936526e-002, -3.225341e-002, -2.315216e-002, -3.413292e-003, -4.658630e-003, -2.224367e-002, -2.293228e-002, 3.359144e-003, -4.188078e-003, 1.117454e-002, 1.610106e-002, 1.618497e-002, -3.445131e-002, 1.128480e-002, 4.730912e-002, 1.405848e-002, -6.620539e-003, -3.763419e-003, 1.026232e-002, 2.409193e-002, 1.581338e-002, 1.025254e-002, 6.863137e-003, 6.697956e-003, -2.328381e-003, -6.026672e-003, 6.659473e-003, 1.245909e-002, -4.227258e-003, -9.848070e-003, -5.234645e-004, 3.800225e-002},
{4.141635e-003, -2.892396e-002, -5.220662e-002, 8.557120e-003, -4.257472e-002, -9.174681e-002, -8.296388e-002, -2.692924e-002, 6.047971e-003, 5.640748e-003, -1.222889e-002, -6.247641e-002, -5.746239e-002, 5.557404e-002, 4.250295e-002, 2.477828e-002, -1.031024e-002, -3.682397e-002, -4.502379e-002, 1.051020e-001, 9.780366e-002, 4.638526e-003, -8.979515e-002, -1.341373e-001, 1.318555e-002, -1.110108e-002, -3.654252e-002, 1.226799e-002, -1.961770e-002, -7.087925e-002, -7.920171e-002, -2.704524e-002, 2.384011e-002, 5.110388e-002, 5.991013e-002, 3.448563e-002, 2.745585e-002, 5.126521e-002, 1.287317e-002, 3.599547e-002, 1.615865e-002, 2.978937e-002, -2.297549e-002, 5.815716e-002, 1.632777e-001, 9.460945e-002, 5.463901e-003, -4.831907e-002, 1.161997e-002, -7.385634e-004, -2.749757e-002, -1.304273e-003, -3.028701e-003, -3.677675e-002, -4.339668e-002, 1.602747e-002, 7.038991e-002, 1.035648e-001, 1.092156e-001, 6.762543e-002, 2.483885e-002, -4.641751e-002, 2.696311e-003, 2.899745e-002, 1.960607e-002, 5.139710e-002, 3.126566e-002, -6.311490e-002, 6.709529e-002, 1.106327e-001, 5.762469e-002, -2.154135e-004, 4.337774e-003, 6.350510e-003, -1.963833e-002, -1.293620e-002, -1.286674e-002, -1.687271e-002, -2.746176e-002, 2.206926e-002, 6.627964e-002, 7.826429e-002, 6.052749e-002, -1.006576e-002, -8.781088e-002, -9.823324e-002, 1.031052e-002, 2.078485e-002, 9.950982e-003, 4.620119e-002, 6.744331e-002, -8.739302e-002, -1.159259e-001, -3.160079e-002, -2.117181e-003, -3.411197e-002, -4.313098e-003, 5.091066e-003, 1.624817e-003, -7.127575e-003, -6.945773e-003, -2.457495e-002, -5.576379e-002, -4.120184e-002, -2.024596e-002, -2.313722e-002, -6.154112e-002, -1.170286e-001, -1.256575e-001, -4.284760e-002, 2.254843e-002, -7.064979e-003, -3.085818e-002, 1.045897e-002, 7.602531e-002, -1.866181e-003, -1.342254e-001, -1.667367e-001, -1.369057e-001, -1.174041e-001, -1.721275e-003, -4.590344e-004, 2.366338e-002, 2.450876e-002, 3.566658e-002, 4.330868e-002, 2.019484e-002, 7.680214e-003, -2.507936e-003, -2.585678e-002, -4.089883e-002, -5.511971e-002, -2.161421e-002, 3.287259e-002, 4.311752e-002, -2.512612e-002, -7.157815e-002, -5.801603e-002, 2.490471e-002, 4.846176e-002, -2.709109e-002, -5.918407e-002, -9.638555e-002, -1.144552e-001, 1.810827e-002, -1.083080e-002, 2.969565e-002, 4.566389e-002, 7.724332e-002, 1.098733e-001, 1.048587e-001, 9.018258e-002, 5.031868e-002, 1.083157e-002, 1.472118e-002, 4.101546e-002, 3.070553e-002, 3.544767e-002, 4.713689e-002, -8.397283e-003, -6.424414e-002, -9.350552e-002, -5.001786e-002, 3.695957e-002, 9.252047e-003, 1.067261e-002, 3.322201e-002, 2.256260e-002, 3.030042e-002, -1.290112e-002, 3.160777e-002, 5.659465e-002, 7.147943e-002, 1.106727e-001, 1.122474e-001, 8.098663e-002, 2.879585e-002, -6.312045e-003, 2.824954e-002, 3.445191e-002, -3.493730e-002, -4.279093e-004, 5.151365e-002, 3.938739e-002, 1.665943e-002, -2.432307e-002, -6.362997e-002, -1.105231e-002, 5.309045e-003, -3.224380e-002, 2.423547e-002, 6.403810e-002, 2.594682e-002, -1.176948e-002, 3.542162e-002, 5.584762e-002, 5.476105e-002, 7.826112e-002, 7.587674e-002, 3.468503e-002, -1.753068e-002, -2.455836e-002, 7.038211e-003, -4.126471e-002, -7.275991e-002, 2.599101e-002, 4.794123e-002, 3.264840e-002, 1.328276e-002, -1.142826e-002, -4.852973e-002, -5.976314e-002, -3.000810e-003, -3.892660e-002, -2.484112e-002, 2.458925e-002, -

© ISO/IEC 2004 — All rights reserved


Copyright International Organization for Standardization
Provided by IHS under license with ISO
No reproduction or networking permitted without license from IHS
Not for Resale

1.948454e-002, -2.022395e-002, 2.505755e-002, 4.774896e-002, 2.853914e-002, 3.853115e-002, 2.983802e-002, -1.556748e-002, -4.631825e-002, -1.685300e-002, -1.730140e-002, -4.739931e-002, -2.105040e-002, 3.505396e-003, 1.180834e-002, 4.855508e-002, 1.342425e-002, -1.447354e-002, -2.763897e-002, -3.920078e-002, -1.128011e-002, -1.097303e-002, -1.969101e-002, 4.104740e-003, -1.127207e-002, -8.380857e-003, 1.538881e-002, 3.142104e-002, -4.513966e-003, -1.060724e-002, -2.709694e-002, -5.153431e-002, -4.259224e-002, 4.699276e-004, -5.956782e-004, -1.153979e-002, -2.350270e-002, -5.378852e-002, -4.860639e-002, 6.875466e-004, -1.683431e-002, 1.329858e-003, 4.255597e-002, 1.903383e-002, -2.591914e-003, 2.112873e-002, 3.092562e-002, 1.154788e-002, 2.989368e-003, 3.314266e-003, 6.569630e-003, 1.186664e-002, -3.336156e-002, -4.870917e-002, -6.798794e-002, -5.280450e-002, -1.158321e-002, 2.599804e-002, 3.793356e-002, 2.051008e-002, -1.017962e-002, -3.688777e-002, -3.145865e-002, -5.720425e-003, -4.780370e-002, -2.220995e-002, 4.567218e-002, 2.953774e-002, 7.150229e-003, 3.977985e-002, 7.648863e-002, 6.731343e-002, 6.477339e-003, 3.207329e-003, -8.082591e-003, -6.025813e-003, -4.825696e-002, -6.767238e-002, -7.114981e-002, -2.045054e-002, 2.278529e-002, 4.646186e-002, 5.039677e-002, 3.305722e-002, 1.054732e-002, -7.999593e-003, 4.427368e-003, 2.519748e-002, -4.283841e-002, -5.426189e-002, 7.619936e-003, 2.526165e-002, 8.650644e-003, 1.450262e-002, 5.696543e-002, 8.476792e-002, -7.113505e-003, 2.351219e-003, -7.488455e-003, -1.559225e-002, -3.956490e-002, -5.483413e-002, -3.457375e-002, 1.637537e-002, 2.737729e-002, -5.573943e-004, -1.814557e-002, -3.528390e-002, -4.211876e-002, -3.362244e-002, -2.305674e-002, -2.452421e-003, -3.739193e-002, -4.142314e-002, 2.378531e-003, 2.209045e-002, 2.276519e-002, -2.847305e-003, 5.105001e-003, 4.996465e-002, 8.802950e-004, -1.031509e-003, -2.675889e-003, -2.047735e-002, -2.259418e-002, -2.202660e-002, 1.297433e-002, 4.005572e-002, 1.877822e-002, -3.255270e-002, -2.203703e-002, 9.808036e-003, 6.003795e-003, -2.091401e-002, -5.096085e-002, -5.328786e-002, -4.197938e-002, -1.117466e-002, 2.482706e-002, 3.394712e-002, 4.691845e-002, 4.360687e-002, 2.482349e-002, 4.804686e-002, 2.193306e-002, 5.040158e-004, -1.525397e-003, -1.097199e-002, -2.598388e-003, 1.259856e-002, 4.906932e-002, 5.260724e-002, 1.749117e-002, 2.038056e-003, 3.014030e-002, 4.242967e-002, 1.380428e-002, -3.395329e-002, -6.587156e-002, -7.181304e-002, -5.683986e-002, -7.410020e-003, 5.777982e-002, 9.115470e-002, 8.493929e-002, 4.596563e-002, -1.589779e-002, -4.472535e-004, 1.245387e-002, 4.045548e-003, 2.497808e-003, -1.269974e-003, 1.352650e-002, 2.962434e-002, 5.527525e-002, 3.621523e-002, -8.045460e-003, -1.251283e-002, -4.078990e-003, 4.998233e-003, 1.098053e-002, -6.068366e-003, -3.082873e-002, -4.082811e-002, -4.596489e-002, -2.500559e-002, 2.531880e-002, 8.297502e-002, 9.738933e-002, 4.135529e-002, -3.194766e-002, -4.526794e-002, -2.261018e-002, 1.208324e-002, 8.845820e-004, 3.883144e-003, 1.072119e-002, 1.457939e-002, 3.138357e-002, 1.142280e-002, -2.284363e-002, -1.202999e-002, -3.599134e-003, -5.815161e-003, 2.952740e-003, 1.024530e-002, 1.457396e-002, 1.751895e-002, 6.783073e-003, -4.079183e-003, -6.665270e-003, -4.248598e-004, 9.041417e-004, -1.095017e-003, 5.360535e-003, 2.777515e-003, -6.135110e-002, 4.970610e-003, -7.442086e-003, -3.449323e-003, -3.482408e-004, -1.046838e-002, 4.108769e-003, -1.388488e-003, -2.748898e-002, -3.492753e-002, -4.058470e-002, -5.219688e-002, -3.818722e-002, -1.241988e-003, 3.379515e-002, 5.224320e-002, 4.758927e-002, 1.645517e-002, -1.649842e-002, -4.660964e-002, -4.574930e-002, -1.001175e-002, 3.036976e-002, 4.381580e-002, -5.476364e-002, 3.937739e-003, -2.332570e-002, -2.014497e-002, 3.309914e-004, -2.350203e-002, -1.403451e-002, 3.089646e-003, -1.811362e-002, -4.905107e-002, -6.715498e-002, -7.072591e-002, -4.538442e-002, 3.201717e-003, 5.180908e-002, 7.773636e-002, 5.957364e-002, 1.779893e-002, -2.571765e-002, -6.016535e-002, -5.908250e-002, -1.611138e-002, 2.521467e-002, 2.892354e-002, -1.501653e-003, 9.711540e-003, -2.866370e-002, -4.529720e-003, 1.385222e-002, -9.908054e-003, -1.969764e-002, 1.385061e-002, 1.014247e-003, -3.707747e-002, -6.597426e-002, -6.875112e-002, -4.252328e-002, -2.126353e-003, 5.183918e-002, 7.751915e-002, 5.604658e-002, 2.123158e-002, -2.052601e-002, -4.183939e-002, -4.432109e-002, -1.902005e-002, -5.855916e-003, -1.245408e-002, 1.732978e-002, -1.409085e-002, -4.735400e-002, 6.375482e-003, 2.099750e-002, -4.431539e-003, -1.792134e-002, -1.018655e-003, -1.166477e-002, -2.688088e-002, -3.781384e-002, -4.155660e-002, -2.604062e-002, 1.327881e-003, 3.626276e-002, 4.363218e-002, 2.844702e-002, 9.995849e-003, -8.209583e-003, -1.306623e-002, -1.838303e-002, -1.525706e-002, -2.039433e-002, -3.858967e-002, 1.481583e-002, -9.481867e-003, -2.452209e-002, 9.957900e-003, 2.725949e-003, -1.611241e-002, -1.338515e-002, -9.520414e-003, -2.642000e-002, -2.163494e-002, 1.962816e-003, 1.026344e-002, 8.068227e-003, 1.536997e-002, 1.870705e-002, 8.633996e-003, -3.993595e-003, -1.679525e-003, 8.795447e-003, 5.214420e-003, -4.583662e-003, -1.380919e-002, -3.601382e-002, -4.769433e-002, 2.464546e-002, 4.598595e-002, 3.886954e-002, 3.219992e-002, 1.335443e-002, -1.445651e-002, 1.305192e-003, -1.736914e-003, -1.794751e-002, -1.955661e-002, 2.837887e-002, 5.219377e-002, 4.072142e-002, 2.612027e-002, 1.104883e-002, -6.202936e-003, -9.313693e-003, 2.912125e-003, 1.777920e-002, 1.659745e-002, 2.394154e-003, -5.622835e-003, -2.842685e-002, -2.522556e-002},
{-7.032070e-002, -5.424115e-002, -6.606925e-002, -2.795341e-002, -3.670481e-002, -4.908991e-002, -2.570748e-002, 4.477469e-003, 3.019230e-002, 9.868772e-002, 1.761322e-001, 1.691917e-001, 1.502019e-001, 9.825187e-002, -8.708038e-002, -1.338728e-001, -1.034667e-001, -8.334853e-002, 2.497116e-002, 1.094985e-001, 1.257598e-001, 1.024019e-001, 7.705517e-002, 3.598433e-002, -


© ISO/IEC 2004 — All rights reserved

Copyright International Organization for Standardization
Provided by IHS under license with ISO
No reproduction or networking permitted without license from IHS
Not for Resale

4.158785e-002, -9.804348e-003, -5.809141e-002, -1.608953e-002, -1.378869e-002, -2.074760e-002, -4.435675e-002, -8.632159e-002, -1.104012e-001, -8.726869e-002, -4.013494e-002, 1.983589e-002, 9.326895e-002, 5.583241e-002, -5.456480e-002, -2.312045e-002, -2.817255e-002, -5.810980e-002, -1.924907e-002, 2.489800e-002, 2.237571e-002, -1.323896e-002, -4.821568e-002, -7.149275e-002, -2.144335e-002, 2.951454e-002, -4.230017e-002, -2.884328e-002, 1.414950e-002, 2.858199e-002, -8.651153e-003, -7.120614e-002, -1.090557e-001, -1.106186e-001, -7.621753e-002, 1.489929e-002, 8.012095e-002, 2.550765e-002, 3.437986e-002, 5.873889e-002, 3.209129e-002, -9.524397e-003, -3.911022e-002, -7.627605e-003, -1.960504e-003, -1.048863e-003, -2.437854e-002, -4.601806e-002, -2.370639e-002, 5.787135e-002, -2.634134e-002, -5.502452e-002, 9.807355e-003, 6.591316e-002, 5.018353e-002, 2.448906e-004, -3.612771e-002, -4.415403e-002, -2.127694e-002, 2.299023e-002, 1.531796e-002, 1.990261e-002, 9.343705e-002, 7.352361e-002, 4.381945e-002, 3.037204e-002, -3.256863e-002, -3.630627e-002, 1.438627e-002, 4.328094e-002, 4.442825e-002, 2.777109e-002, -2.677104e-002, 4.952858e-002, -2.480386e-002, -6.618392e-002, -4.366523e-002, 3.606434e-002, 4.976033e-002, 2.926965e-002, 8.777139e-003, -1.687491e-002, -4.697814e-002, -5.665639e-002, -4.077575e-002, 3.283647e-002, 6.764711e-002, 1.752977e-002, 1.722311e-002, 3.444699e-002, -9.174380e-003, -4.764807e-002, -2.849473e-002, 3.495164e-002, 7.700253e-002, 8.564997e-002, -2.442177e-002, 3.159298e-002, -2.054405e-002, -5.013789e-002, -4.357797e-002, -1.637179e-002, -1.515042e-002, -3.368436e-002, -5.970725e-002, -9.210111e-002, -1.002010e-001, -6.865431e-002, -3.860088e-002, 2.523293e-002, 1.066715e-002, -5.380989e-002, -3.501452e-002, -1.583923e-003, 1.621070e-002, 6.416682e-003, -3.603418e-002, -2.915234e-002, 2.127300e-002, 4.948839e-002, -3.129373e-003, 1.612867e-002, -9.540862e-003, -6.406582e-003, 5.134314e-003, 1.698046e-002, 2.362031e-003, -2.803114e-002, -5.492350e-002, -5.843507e-002, -3.300158e-002, -2.613956e-003, -1.051181e-002, 5.932002e-002, 3.206302e-002, -2.789533e-002, -2.220932e-002, -2.199991e-003, 5.066844e-002, 6.095758e-002, 4.946856e-002, -2.932415e-002, -2.314372e-002, -1.945893e-004, 2.096363e-002, 4.045931e-004, -1.417743e-002, 2.564861e-002, 6.387913e-002, 8.676126e-002, 9.011866e-002, 6.696222e-002, 4.111426e-002, 4.056183e-002, 2.881840e-002, -7.506393e-003, -1.070567e-002, 2.295073e-002, 3.321887e-002, 4.190556e-002, 4.252629e-002, 4.024848e-002, 3.696355e-002, -2.281092e-002, 4.339915e-004, -1.802342e-002, -2.243885e-002, 1.624474e-002, 2.470781e-002, -1.058956e-002, -2.606304e-002, 3.267747e-002, 7.752226e-002, 9.383617e-002, 1.064853e-001, 8.627035e-002, 5.615210e-002, 3.168271e-002, -2.255483e-002, -6.072342e-002, -4.865816e-002, -4.072772e-002, -1.980264e-002, 2.794357e-002, 3.308946e-002, 2.172911e-002, 4.164769e-002, -2.349317e-002, -5.259471e-002, -5.741067e-002, -5.411629e-002, -7.201761e-003, 9.160566e-003, -1.699367e-002, -3.155226e-002, 2.870361e-002, 7.089796e-002, 6.474379e-002, 6.972691e-002, 5.602398e-002, 2.656048e-002, -8.592095e-003, -4.782055e-002, -1.466245e-002, 1.279214e-002, 1.510914e-003, 2.649023e-003, 1.472433e-002, -6.123831e-003, -1.513459e-002, 1.962772e-002, 2.762317e-002, -1.452605e-002, -4.088541e-002, -5.381236e-002, -4.682003e-002, 1.313780e-002, -1.651706e-002, -1.980876e-002, 2.861006e-002, 6.826041e-002, 4.460396e-002, 3.184366e-002, 1.763768e-002, -1.705229e-002, -3.904420e-002, 4.975804e-003, 8.222894e-002, 6.174337e-002, -1.799794e-002, -3.870579e-002, 6.957408e-004, 1.665678e-003, 1.133298e-002, 1.349833e-002, 2.971868e-002, 5.467190e-003, -2.726482e-002, -3.089054e-002, -3.419768e-002, 2.251398e-002, -1.154793e-002, -3.761171e-003, 3.033141e-002, 7.615724e-002, 4.116296e-002, -1.131201e-005, -2.663699e-002, 5.323823e-002, -2.721218e-002, 4.932032e-002, 1.133789e-001, 9.148397e-002, 2.432632e-002, -3.990261e-002, -6.316477e-002, -2.453177e-002, 6.099143e-002, 1.192665e-001, 1.031232e-001, 3.674026e-002, -2.184596e-002, -3.150077e-002, -2.737724e-002, 1.202525e-002, -1.085223e-002, 1.726728e-002, 3.186104e-002, 7.140869e-002, 3.006848e-002, -3.889858e-002, -6.109865e-002, -4.427528e-002, -1.125349e-002, 1.772655e-002, 4.056829e-002, 5.834853e-002, 4.044247e-002, -1.954374e-002, -7.767877e-002, -6.037999e-002, 1.194549e-002, 7.875671e-002, 8.150171e-002, 3.150763e-002, -3.290361e-002, -5.583616e-002, -4.148588e-002, 2.452500e-002, -4.726005e-003, 2.323773e-002, 3.304649e-002, 5.139464e-002, 2.057553e-002, -5.808134e-002, -5.919997e-002, -1.989571e-002, -1.277057e-002, -3.901959e-002, -3.912602e-002, 1.387624e-002, 5.463287e-002, 3.446209e-002, -7.977531e-003, -2.564826e-002, 2.375390e-003, 1.176165e-002, -5.331931e-003, -3.636771e-002, -6.460127e-002, -5.394599e-002, -1.927891e-002, 2.166296e-002, 3.395719e-003, 1.506405e-002, 3.302625e-002, 1.223183e-002, -2.876693e-003, -5.366674e-002, -2.796287e-002, 1.798948e-002, 9.896066e-003, -1.632910e-002, -9.051890e-004, 2.470977e-002, 2.641983e-002, 5.047398e-003, -4.440450e-002, -5.184909e-002, -2.919828e-002, -7.574270e-003, -2.070938e-002, -4.931986e-002, -5.719904e-002, 1.063470e-003, 4.846447e-002, -1.250124e-003, 7.661711e-003, 3.361729e-003, 3.742487e-002, -1.587544e-002, -2.883866e-002, -3.173396e-002, 2.573080e-002, 4.669632e-002, -9.495707e-003, -4.081031e-002, 1.926467e-002, 4.714792e-002, 3.538857e-004, -5.644395e-002, -9.317323e-002, -7.679014e-002, -2.859906e-002, 4.124181e-002, 4.515447e-002, -1.923748e-002, -7.429145e-002, -3.543673e-002, 5.395557e-002, -2.773807e-002, 2.298077e-002, -1.741734e-004, 2.231088e-002, -2.504620e-002, -5.278751e-002, -6.904023e-003, 6.864499e-002, 6.947292e-002, 6.130444e-003, -1.290441e-002, 2.098696e-002, 3.719214e-002, 6.832128e-003, -2.521806e-002, -3.999863e-002, -3.717651e-002, -2.781128e-002, 2.578161e-003, 2.444203e-002, 8.426316e-003, -1.968998e-002, -1.324824e-002, 4.062685e-002, -

© ISO/IEC 2004 — All rights reserved


Copyright International Organization for Standardization
Provided by IHS under license with ISO
No reproduction or networking permitted without license from IHS
Not for Resale

3.552174e-002, 1.673255e-002, -6.047203e-003, -1.034021e-002, -6.036888e-003, -4.905377e-002, -1.123922e-002, 4.552761e-002, 2.875889e-002, -2.009362e-002, -3.861320e-002, -3.404521e-002, -1.642892e-002, -6.726049e-003, -1.032090e-002, -2.079539e-002, -3.493366e-002, -3.040763e-002, -4.616211e-003, 1.571220e-002, 2.571823e-002, 1.950652e-002, 5.654748e-003, 2.278277e-003, -1.779903e-002, -9.466083e-003, -1.627291e-002, -1.487800e-002, 1.315392e-002, -2.057045e-002, -3.715747e-002, -5.553780e-003, -1.720534e-002, -4.224911e-002, -3.897111e-002, -2.325330e-002, -8.228419e-003, -5.778429e-003, -9.059771e-003, -2.386626e-002, -2.435621e-002, -7.291416e-004, 2.306144e-002, 3.445722e-002, 3.479644e-002, 2.788312e-002, -4.176547e-003, -3.336846e-002, 1.557271e-002, -3.418241e-002, -2.596619e-002, -5.475782e-003, 6.169646e-003, 1.383147e-002, -3.299997e-002, -3.041901e-002, -2.825056e-002, -3.031932e-002, -7.527495e-003, 2.206155e-002, 2.687960e-002, 9.458703e-003, -1.631991e-002, -3.151817e-002, -2.843089e-002, -5.847026e-003, 2.324190e-002, 3.842103e-002, 4.450476e-002, 2.771364e-002, 1.147274e-003, -2.332211e-002, 2.481354e-002, -4.116419e-002, -1.100077e-002, 2.285798e-002, -1.255217e-002, 3.132176e-002, -8.100035e-003, -3.001066e-002, -8.339073e-003, -5.476421e-003, 1.261317e-004, 8.190228e-003, 1.050095e-002, 3.994464e-003, -1.252337e-002, -1.596580e-002, -1.782397e-002, -1.302457e-002, 2.903879e-003, 2.047711e-002, 3.639356e-002, 2.963772e-002, 9.146045e-003, 1.113186e-004, 2.963180e-002, -4.383947e-002, -4.143946e-003, 1.860477e-002, -3.686888e-002, 2.795581e-002, 3.529380e-004, -2.702026e-002, 2.966517e-003, 1.419247e-002, -1.385093e-002, -3.464871e-002, -2.531212e-002, -8.401628e-003, -4.750316e-003, 3.917341e-003, 6.478866e-004, -2.078636e-002, -2.101338e-002, -9.309310e-003, 9.500369e-003, 1.408814e-002, 5.256899e-003, 1.977899e-002, 3.913997e-003, -3.532001e-002, 1.372624e-002, 5.264979e-003, -2.278097e-002, 4.607907e-002, 2.260771e-003, -3.349711e-002, 1.264100e-004, 2.881256e-002, -1.048666e-003, -4.889704e-002, -4.083299e-002, -8.427739e-003, 1.913423e-002, 2.776024e-002, 1.752093e-002, -1.320247e-002, -2.635051e-002, -2.071032e-002, -1.579028e-002, -1.602075e-002, 3.586983e-003, 3.169647e-002, -3.825684e-003, 3.972713e-003, 4.966966e-002, 3.418856e-002, 1.856987e-002, 7.351435e-002, 1.653371e-002, -4.094751e-002, -9.860217e-003, 3.474947e-002, 3.337044e-002, -1.563776e-002, -3.279711e-002, -7.814984e-003, 2.344428e-002, 2.986964e-002, 1.481049e-002, -5.705186e-003, -2.594081e-002, -2.307177e-002, -2.991027e-002, -2.824314e-002, 1.701817e-003, 2.722163e-002},
{-8.226419e-002, -6.284687e-002, -4.272551e-002, -1.569265e-002, -4.657395e-002, -4.080597e-002, -3.303785e-002, -5.300813e-002, -7.327227e-002, -7.708134e-002, -4.408367e-002, 3.240759e-002, 5.256570e-002, -6.094652e-002, -4.488510e-002, -2.615676e-002, 5.191938e-003, 3.324718e-002, -2.352616e-002, -8.865592e-002, -2.377550e-002, -1.453491e-002, -5.715018e-002, -5.821652e-002, -2.856961e-002, -1.684004e-002, -2.071051e-002, -2.882663e-004, -1.644923e-003, 3.128540e-002, 7.078012e-002, 1.022349e-001, 1.164714e-001, 1.221486e-001, 1.231071e-001, 1.310000e-001, 5.915871e-002, -6.803089e-002, -3.633145e-002, -2.667280e-002, -4.662412e-003, 1.835864e-002, 1.659558e-002, -4.771251e-002, 1.697260e-002, 7.362744e-002, 8.363427e-002, 8.121739e-002, 1.467734e-002, 3.170537e-002, -6.650170e-004, 2.706174e-002, -8.926443e-003, -1.507136e-002, -5.386638e-003, 1.156824e-002, 1.866621e-002, 1.962122e-002, 3.105340e-002, 4.468452e-002, -1.820299e-002, -6.776837e-002, -1.967542e-002, -1.100806e-002, -8.111738e-003, 1.018962e-002, 1.828593e-002, -1.717484e-002, -7.217504e-003, 2.285547e-002, 4.237592e-002, 5.315640e-002, 1.163901e-002, 5.231012e-002, 2.085985e-002, 6.390739e-002, 2.009055e-002, -5.954467e-002, -1.183954e-001, -1.321106e-001, -1.245324e-001, -1.083166e-001, -7.590386e-002, -3.232754e-002, -4.490021e-002, -3.444151e-002, 1.565228e-002, -1.714152e-003, -9.108919e-003, 1.613306e-002, 1.653086e-003, -2.243367e-003, 7.188477e-003, -1.129742e-002, -4.515848e-002, -6.593248e-002, -2.126447e-002, 4.364805e-002, 3.025337e-002, 8.250517e-002, 7.712553e-002, -1.901670e-002, -1.085664e-001, -1.448216e-001, -1.405610e-001, -9.907469e-002, -1.788918e-002, 4.860832e-002, 5.053900e-003, 7.601969e-003, 4.349486e-002, 4.028372e-003, -1.438524e-002, 8.921416e-003, 4.137873e-003, -1.035136e-002, 3.024316e-002, 3.569740e-002, -1.906547e-002, -6.442729e-002, -4.858187e-002, 2.773177e-003, 2.201272e-002, 6.995507e-002, 8.869746e-002, 4.396160e-002, 8.692345e-004, -2.248060e-002, -9.997178e-003, 4.726003e-002, 1.153958e-001, 8.675425e-002, -8.693438e-003, 2.107035e-002, 5.110750e-002, 7.260990e-003, -2.011725e-002, 1.284018e-003, -3.817335e-003, -2.679144e-002, 6.032896e-002, 9.239837e-002, 3.789155e-002, -1.899452e-002, -2.483754e-002, -1.874349e-002, -1.347067e-002, 2.213581e-002, 5.146430e-002, 4.030676e-002, 2.787750e-002, 3.831115e-002, 6.411538e-002, 9.655924e-002, 1.010685e-001, 3.476703e-002, -1.575396e-002, 2.786727e-004, 3.315364e-002, 2.214754e-002, 5.845664e-003, -9.454640e-003, -2.051919e-002, -4.766068e-002, 6.539946e-002, 1.300653e-001, 5.562676e-002, -4.261008e-003, 2.381580e-002, -2.121152e-002, -5.241841e-002, -3.655301e-002, -1.457806e-002, -2.923188e-003, 7.491387e-003, 2.272200e-002, 3.879462e-002, 4.927655e-002, 3.089520e-002, 8.857619e-003, -3.431819e-003, -1.031054e-002, -2.251562e-003, 2.306333e-002, 2.063829e-002, -3.115240e-002, -2.861872e-002, -6.701739e-002, 5.624048e-003, 9.722805e-002, 4.377046e-002, -1.221939e-002, 7.813573e-002, 3.299310e-003, -6.562236e-002, -7.679128e-002, -6.640560e-002, -5.231332e-002, -3.962257e-002, -3.418937e-002, -1.825182e-002, -4.676994e-003, -1.714773e-002, -2.842150e-002, 8.560756e-003, 4.282477e-002, -1.208326e-002, -2.545549e-002, -1.296551e-003, -1.066066e-002, -3.775459e-003, -3.939835e-002, -1.862096e-002, 1.781389e-002, -2.314397e-002, -6.865110e-002,


© ISO/IEC 2004 — All rights reserved

Copyright International Organization for Standardization
Provided by IHS under license with ISO
No reproduction or networking permitted without license from IHS
Not for Resale

8.130344e-002, 1.842264e-002, -5.931103e-002, -8.271555e-002, -8.977122e-002, -8.537625e-002, -6.483740e-002, -5.173317e-002, -1.917011e-002, -2.544945e-003, -2.087669e-002, -4.531223e-002, -1.177434e-003, 4.068323e-002, -3.452704e-003, -2.570209e-002, -2.696198e-002, -3.538202e-002, -1.316608e-002, 1.006588e-002, 2.292373e-002, -2.284983e-003, -5.068694e-002, -8.983860e-002, -1.777040e-002, -1.128548e-003, -4.131114e-002, -5.274024e-002, -6.278443e-002, -7.029918e-002, -4.052315e-002, -9.214030e-003, 1.644852e-002, 1.643099e-002, 1.540009e-003, 8.861296e-004, 1.395508e-002, 4.141800e-002, 2.879570e-002, -1.717623e-002, -2.134317e-002, -1.293374e-002, 1.630664e-002, 5.304511e-002, 6.348955e-002, 3.867251e-002, -1.343785e-002, -5.526162e-002, -9.072383e-002, -1.923990e-002, -1.454093e-002, -6.833751e-003, -8.087322e-003, -2.758940e-002, 5.179875e-004, 3.793302e-002, 4.022311e-002, 8.344132e-003, -4.396067e-003, 2.295456e-002, 2.795545e-002, 3.801806e-003, -5.011073e-002, -9.273994e-002, -6.514448e-002, -1.127507e-002, 1.294322e-003, 6.548503e-003, 2.030670e-002, 3.467708e-002, 3.897669e-002, 1.074426e-002, -8.044617e-002, 1.135715e-002, 3.784210e-002, 3.819365e-002, 4.591458e-002, 1.855919e-002, 3.464771e-002, 5.623033e-002, 2.803574e-002, -2.635808e-002, -3.684231e-002, 2.626089e-002, 6.486082e-002, 4.569049e-002, -8.770568e-003, -5.484508e-002, -3.618726e-002, 5.264068e-002, 6.866839e-002, 2.082444e-002, -3.120663e-002, -3.147151e-002, 1.394942e-002, 5.611166e-002, -1.243587e-002, 3.947059e-002, 6.684567e-002, 5.205770e-002, 6.835733e-002, 5.081181e-002, 3.988305e-002, 3.583747e-002, -6.413963e-003, -6.023071e-002, -5.351890e-002, 2.481769e-002, 7.554183e-002, 4.640654e-002, 6.610759e-003, -3.384856e-002, -4.714025e-002, 9.956876e-004, 3.334955e-002, 9.408583e-005, -5.845933e-002, -9.400168e-002, -4.164347e-002, 5.965266e-002, 2.005005e-002, 3.644658e-002, 5.061195e-002, 4.246034e-002, 6.029288e-002, 5.786464e-002, 2.128658e-002, -1.941167e-003, -3.206914e-002, -6.833329e-002, -7.428551e-002, -1.762484e-002, 3.734137e-002, 4.816423e-002, 4.284659e-002, 1.939930e-002, -9.305143e-003, -1.327362e-002, -3.521847e-003, -1.878079e-002, -3.899828e-002, -6.567708e-002, -7.877558e-003, 8.729433e-002, -1.729123e-002, 5.474422e-003, -4.905587e-003, 8.367400e-003, 3.693334e-002, 3.174398e-002, -1.064756e-002, -1.810077e-002, 1.131669e-002, -1.122325e-002, -6.894875e-002, -6.796273e-002, -1.813673e-002, 1.908416e-002, 2.488755e-002, 1.652687e-002, 6.216329e-003, 5.319191e-003, -1.195059e-003, -2.187936e-002, -3.646661e-002, -2.994181e-002, -2.287389e-003, 5.928874e-002, -5.047036e-002, -1.737883e-003, -5.973320e-002, -3.162871e-002, 5.581795e-003, -7.697667e-003, -3.228729e-002, -6.576741e-003, 6.489063e-002, 4.126358e-002, -1.134046e-002, 6.436785e-003, 3.875496e-002, 5.019155e-002, 2.177856e-002, -1.128523e-002, -1.363716e-002, 2.315830e-003, 1.838922e-002, 2.334630e-002, 5.634237e-003, -2.218052e-002, -3.494218e-002, -1.042164e-002, -6.828333e-002, 1.257417e-002, -7.271107e-002, -3.510560e-002, -6.581292e-003, -3.607449e-002, -3.008138e-002, 8.815953e-003, 4.494771e-002, 9.782430e-003, -2.613359e-002, -1.165092e-002, 2.130844e-002, 4.000053e-002, 4.060361e-002, 3.462157e-002, 3.693360e-002, 4.708361e-002, 5.290715e-002, 3.471314e-002, 4.457969e-003, -3.001148e-002, -5.349492e-002, -3.324072e-002, -8.473028e-002, 2.719398e-002, -1.174417e-002, -1.335941e-002, 8.498439e-003, -3.571040e-002, -2.619160e-002, 1.631092e-002, 1.288768e-002, -6.842914e-003, 5.269215e-004, 1.137712e-002, 2.777037e-002, 3.051945e-002, 2.293555e-002, 6.220135e-003, -8.742813e-004, 3.891512e-003, 8.492873e-003, 2.247890e-003, -8.347257e-004, -1.199954e-002, -2.749944e-002, -1.586400e-002, -4.884578e-002, 4.572034e-002, 4.509310e-002, 2.013590e-002, 3.881019e-002, -1.813623e-002, -2.313504e-002, 2.148319e-002, 1.089995e-002, -1.415447e-002, -1.757063e-003, 2.154770e-002, 3.742380e-002, 4.465268e-002, 2.936980e-002, 4.507976e-003, -7.352854e-003, -1.927711e-003, 2.051511e-002, 2.943912e-002, 3.196450e-002, 3.138320e-002, 6.335047e-003, 1.700164e-003, -9.100585e-003, 3.914492e-002, 2.585436e-002, 1.961046e-002, 2.116233e-002, -1.654478e-002, -3.080789e-002, 1.530481e-002, 2.182930e-002, -1.329049e-002, -2.063787e-002, -3.515911e-003, 4.866821e-003, 3.035581e-003, -1.363990e-002, -3.967742e-002, -5.051033e-002, -3.357865e-002, 7.698230e-003, 3.290380e-002, 3.828779e-002, 2.877423e-002, 9.610267e-003, 1.027964e-003, 9.864376e-003, 2.574759e-002, -1.037966e-002, -1.559911e-003, -3.547761e-003, -1.470745e-002, -2.277750e-002, 2.683843e-002, 4.493267e-002, 5.749174e-003, -1.245987e-002, -5.766272e-003, 6.674613e-003, -2.046391e-003, -2.285285e-002, -4.824744e-002, -6.713344e-002, -4.632097e-002, -5.100094e-005, 2.882433e-002, 2.593282e-002, 1.596918e-002, 3.481754e-003, 5.749998e-003, 1.081452e-002, 2.228240e-002, -1.820448e-002, -7.606539e-003, 4.904022e-003, 1.516074e-002, 5.729755e-003, 3.119625e-002, 4.670747e-002, 1.487961e-002, -8.136844e-003, 4.609911e-003, 1.880027e-002, 9.242522e-003, -6.343895e-003, -2.598668e-002, -5.142131e-002, -4.867396e-002, -1.701227e-002, -4.090980e-003, -4.715406e-003, -1.278944e-003, 2.955535e-003, 2.817599e-002, 4.951321e-002, 5.476490e-002, 6.813316e-003, 2.928412e-002, 4.450729e-002, 3.998656e-002, 1.740022e-002, 1.604390e-002, 1.192592e-002, -1.132387e-002, -2.794324e-002, -1.971008e-002, -5.219509e-003, 5.723871e-003, 2.076020e-003, -1.630378e-002, -4.521134e-002, -5.014378e-002, -4.286074e-002, -4.362052e-002, -3.590644e-002, -1.476111e-002, 1.618595e-002, 4.007769e-002},
{5.833976e-003, 3.130289e-002, 2.523018e-002, 1.076042e-001, 2.749988e-002, 2.803426e-002, 1.074406e-001, 1.211296e-001, 1.272473e-002, -2.564293e-002, -2.434621e-002, -3.954558e-002, 3.236736e-002, 5.664953e-002, -2.659856e-002, 5.566356e-002, 8.758504e-002, 5.853060e-002, 8.225885e-002, 1.061110e-001, -2.591269e-002, -3.613357e-002, 5.260712e-002, 5.033688e-002, -

© ISO/IEC 2004 — All rights reserved


Copyright International Organization for Standardization
Provided by IHS under license with ISO
No reproduction or networking permitted without license from IHS
Not for Resale

1.561216e-002, 3.402077e-003, -4.842107e-002, 3.887502e-002, -1.161723e-002, -1.780741e-002, 4.690160e-003, -2.411633e-002, -8.986358e-002, -1.297009e-001, -1.342111e-001, -7.759915e-002, 2.048005e-002, -2.440640e-002, -5.924045e-002, 3.194000e-002, 3.328168e-002, 3.038769e-003, 6.933013e-003, 6.437002e-002, -4.686267e-002, -1.153090e-001, -8.641647e-002, -5.121402e-002, -2.887375e-002, -4.743307e-003, -7.377346e-002, -2.286951e-002, -1.536708e-002, 2.067632e-003, 2.743501e-002, 5.035879e-003, -4.096618e-002, -7.037336e-002, -6.320453e-002, 9.229667e-003, 4.198761e-002, -6.418264e-002, -4.627049e-002, 1.046113e-002, -1.825879e-002, -4.229248e-002, -1.906565e-002, 1.055655e-002, 2.608059e-002, -1.719192e-002, -1.904104e-002, 7.008160e-003, -3.984580e-002, 1.329228e-002, -7.018382e-002, -5.206160e-002, -1.555524e-002, 3.496256e-002, 8.935925e-002, 9.005105e-002, 6.036762e-002, 3.209563e-002, 3.591158e-002, 6.311522e-002, 5.965481e-003, -8.566101e-002, -1.272519e-002, 1.691087e-003, -3.070153e-002, -3.793836e-002, 2.225687e-002, -2.523242e-002, -1.051455e-002, 4.777681e-002, 8.348840e-002, 1.116846e-001, -1.430367e-002, 3.313033e-002, -5.294892e-002, -5.331546e-002, -4.719244e-002, -7.981471e-003, 6.068352e-002, 7.925975e-002, 5.735159e-002, 2.467989e-002, 1.390799e-002, 9.836678e-003, -6.011357e-002, -5.229033e-002, 8.223626e-003, 1.146547e-002, -2.159024e-002, -1.465590e-003, 8.758449e-002, 4.153438e-002, -7.816052e-002, -8.063378e-002, 2.534058e-002, 9.560653e-002, -8.856676e-003, 4.958254e-002, -3.372064e-002, -1.647642e-003, -1.378263e-002, -4.430229e-002, -4.959850e-002, -7.147360e-002, -9.409125e-002, -9.201831e-002, -4.163159e-002, -2.695417e-002, -6.114841e-002, -1.946200e-002, -5.118670e-004, -1.844245e-003, -2.373698e-002, 9.357603e-003, 6.772952e-002, 5.309913e-002, 1.554228e-002, -9.074012e-002, -1.171454e-001, -7.580835e-002, 6.724169e-003, 4.525009e-002, -2.041468e-002, 2.146838e-002, 6.004347e-002, 3.950456e-002, 8.218642e-003, -2.641562e-002, -4.457178e-002, -1.248975e-002, 3.922406e-002, 1.218548e-002, -3.612272e-002, -5.759567e-002, -5.428933e-002, -1.149684e-002, -9.867714e-003, 6.210740e-004, -6.524220e-002, -8.597510e-002, -5.380947e-003, 4.850015e-002, 3.922857e-003, -2.139412e-002, 1.366412e-002, 2.610160e-002, -3.327264e-002, -1.096095e-003, 4.804112e-002, 6.382053e-002, 4.195804e-002, 1.670379e-002, 9.552036e-003, 5.040425e-002, 8.711955e-002, 5.491846e-002, 6.320138e-002, 1.445001e-002, 1.214310e-002, 3.269575e-002, 9.055961e-003, 1.597398e-002, -6.423428e-002, -7.247573e-002, -1.688090e-002, 8.000850e-002, 9.590696e-002, 6.397472e-002, -2.033273e-005, 6.970277e-003, -5.214040e-002, -2.940933e-002, 1.061607e-002, 2.674495e-002, 2.981362e-003, -1.467057e-002, 7.384272e-003, 5.492280e-002, 8.480336e-002, 7.190053e-002, 9.179468e-002, 2.705501e-002, 3.176652e-002, 6.415310e-003, -4.829130e-002, -3.924465e-002, -3.710602e-002, 7.286530e-002, 1.026882e-001, 8.258526e-002, 6.612037e-002, 5.283817e-002, -8.464129e-003, -1.055142e-002, -5.707385e-002, -3.922605e-002, -1.189576e-002, -6.159135e-003, -3.546696e-002, -4.055432e-002, -1.741554e-003, 3.413569e-002, 3.085081e-002, 3.069735e-002, 7.113405e-002, 7.804051e-002, 9.066072e-002, 1.466751e-002, -3.075129e-002, 2.185342e-002, -1.062239e-002, 2.544427e-002, 7.792168e-002, 2.986592e-002, -1.486015e-002, -1.730584e-003, -6.432862e-003, -5.088225e-003, -4.332453e-002, -1.324743e-002, -1.914010e-003, 4.929438e-003, -1.919589e-002, -3.213542e-002, -1.663425e-002, -3.536288e-002, -5.242613e-002, -2.243008e-002, 1.748343e-002, 3.847956e-002, 8.881280e-002, 5.065143e-002, 3.946517e-002, 1.038204e-001, 5.585084e-002, 3.668519e-003, 1.791988e-003, -4.767132e-002, -9.523236e-002, -8.584734e-002, -1.230129e-002, -8.707639e-003, -1.883680e-002, 2.179560e-002, 2.416083e-002, 1.989344e-002, 3.608938e-003, -3.235493e-002, -6.040376e-002, -9.103585e-002, -7.750689e-002, -2.726589e-002, -1.151831e-004, -5.235235e-003, 1.234676e-002, -4.027403e-003, -1.223654e-002, 2.790492e-002, 1.476233e-002, 1.144658e-002, 9.033850e-003, -4.466764e-002, -1.023754e-001, -1.296593e-001, 3.947739e-003, -1.720241e-002, -9.097700e-004, 4.354137e-002, 5.350644e-002, 3.160762e-002, 1.657086e-002, -3.422860e-002, -6.930806e-002, -4.429805e-002, 1.298799e-002, 5.012345e-002, 4.560613e-002, 5.731410e-003, -1.916950e-002, -2.247492e-002, -1.065841e-002, -2.657327e-002, -3.648606e-002, -8.635902e-003, 2.477821e-002, 1.028317e-002, -3.558858e-002, -8.394558e-002, 2.889698e-002, -1.472921e-002, 6.086454e-003, 4.538675e-002, 6.554787e-002, 2.999681e-002, 1.109779e-002, -2.926275e-002, -4.526394e-002, -7.127351e-003, 3.829758e-002, 4.252198e-002, 1.827017e-002, -7.944868e-003, -1.286098e-002, 1.348382e-002, 2.679439e-002, -1.408121e-002, -4.266717e-002, -2.742815e-002, 2.065476e-003, 3.375083e-002, 2.687809e-002, -9.297357e-003, 2.719236e-002, -2.968362e-002, 9.648419e-003, 3.966475e-002, 5.837015e-002, 1.582002e-002, -4.548658e-003, -8.251235e-003, -2.975706e-002, -3.336298e-002, 1.580732e-003, 4.042296e-002, 4.853136e-002, 1.763287e-002, -2.303808e-002, -2.625953e-002, -2.098961e-002, -4.106795e-002, -4.574198e-002, -1.229622e-002, 2.144116e-002, 4.041554e-002, 7.579451e-003, -9.189281e-003, -1.263908e-003, -3.295055e-002, 1.133232e-002, 2.237254e-002, 2.188584e-002, -1.401941e-002, -3.162930e-002, -1.453140e-002, -3.384030e-002, -3.917337e-002, 1.896461e-002, 8.124575e-002, 7.548350e-002, 2.692331e-002, -1.504990e-002, -2.697007e-002, -2.158384e-002, -1.372211e-002, -6.695510e-003, 3.213110e-002, 5.532997e-002, 3.698658e-002, -1.385432e-002, -3.405628e-002, -3.699826e-002, -4.610434e-002, -5.285749e-004, 2.430336e-003, -1.498591e-002, -5.281059e-002, -6.478147e-002, -4.081005e-002, -3.909826e-002, -3.296312e-002, -2.037089e-002, -2.576584e-002, -2.375164e-002, -2.635636e-002, -7.960616e-003, 1.711652e-002, 2.132384e-002, 2.097160e-002, 7.895244e-003, -1.605294e-003, -2.201889e-002, -4.320099e-002, -2.867658e-002, -2.139112e-003, -


© ISO/IEC 2004 — All rights reserved

Copyright International Organization for Standardization
Provided by IHS under license with ISO
No reproduction or networking permitted without license from IHS
Not for Resale

3.569000e-002, -2.724762e-002, 1.212405e-002, -2.110692e-002, -2.383849e-002, -6.485785e-002, -6.825689e-002, -3.652392e-002, -1.784018e-002, 1.059642e-002, 3.249220e-002, -1.471818e-004, -2.778223e-002, -3.398015e-002, -1.749166e-002, 8.255709e-003, 1.462411e-002, 1.459833e-002, -2.915674e-003, -1.485137e-002, -1.362478e-002, -1.473387e-003, 4.457715e-002, 4.280941e-002, -1.579902e-002, -8.248644e-003, 2.937203e-002, -2.975076e-002, 5.686354e-003, -2.637502e-002, -2.778755e-002, -1.168914e-002, -3.139595e-003, 4.655856e-004, 6.892553e-003, -3.085964e-002, -5.436231e-002, -5.136173e-002, -2.320935e-002, 1.651033e-002, 3.857049e-002, 2.911554e-002, 4.102623e-003, -2.501630e-002, -3.698787e-002, -1.481821e-002, 3.355955e-002, 1.407863e-002, 2.085720e-002, -3.028630e-004, 5.207251e-002, 1.430204e-002, 2.565218e-002, 2.233493e-002, 1.826776e-002, 2.428216e-002, 3.248878e-003, -1.392001e-002, -8.814462e-003, -2.957646e-002, -5.529104e-002, -4.332666e-002, 2.777652e-003, 4.574221e-002, 6.331984e-002, 4.625709e-002, 5.139377e-004, -4.275899e-002, -4.170260e-002, -4.994359e-003, 1.749657e-002, -4.041339e-002, 3.891333e-002, -6.556807e-003, 1.972367e-002, 4.580031e-002, 2.102547e-002, 6.003633e-003, 2.576933e-002, 3.200657e-002, 1.676196e-002, -5.150351e-003, -4.307550e-003, 3.743138e-003, -7.604286e-003, -1.357863e-002, 7.429813e-003, 3.644234e-002, 4.447002e-002, 1.597800e-002, -3.035195e-002, -5.622965e-002, -3.098776e-002, 1.708129e-002, 2.209099e-005, -5.748452e-002, 1.054815e-002, -1.883072e-002, -1.254616e-002, 1.581679e-002, 1.219958e-002, -4.035140e-002, -1.637172e-002, 1.990436e-002, 1.725159e-002, 2.690938e-003, 9.490436e-003, 2.210469e-002, 2.937390e-002, 3.534050e-002, 4.862593e-002, 6.086613e-002, 6.029712e-002, 2.611111e-002, -1.486863e-002, -3.673794e-002, -8.314202e-003, 1.593078e-002, -1.173043e-002, -4.591510e-002, -3.815070e-003, 5.209006e-003, 2.647546e-003, -4.318399e-002, 3.450142e-002, -5.864541e-003, -4.318504e-002, -8.437441e-004, 4.652832e-003, -5.533402e-003, 3.175936e-003, -6.964144e-005, 1.296368e-002, 2.263235e-002, 3.893324e-002, 4.103976e-002, 3.587226e-002, 6.300347e-003, -2.144474e-002, -2.617992e-002, -3.684032e-003, 1.893221e-003, 4.890331e-004, 4.789342e-003, 3.992003e-002, 5.616583e-002, 3.519747e-002, -4.772235e-002, 7.556744e-002, 7.421669e-002, 7.194155e-003, 2.295547e-002, 2.562576e-002, -5.379967e-003, -8.766348e-003, -2.496651e-002, -2.043528e-002, -1.997484e-002, -3.473925e-003, -8.610918e-003, -2.538816e-002, -4.188249e-002, -4.787231e-002, -2.846980e-002, -1.055656e-003, 2.108005e-002, 5.855246e-002, 8.949975e-002},
{-3.943267e-002, -8.569113e-002, -7.707113e-002, 4.896242e-003, -2.520999e-002, -4.701590e-002, -3.501149e-002, -4.606821e-002, -1.050726e-001, -7.173343e-002, 1.680041e-002, 7.230538e-002, 7.500322e-002, -4.439471e-002, -6.911771e-002, -1.079816e-002, -4.276077e-003, -2.801361e-002, -1.508536e-002, -1.867039e-002, 1.373519e-004, 1.463700e-002, 8.106044e-002, 8.077140e-002, -8.150859e-003, -1.919133e-002, -4.645402e-002, 1.433130e-002, -1.298769e-002, -2.837152e-002, -2.158186e-002, -2.551099e-002, -3.359414e-002, 4.799154e-003, 4.920909e-002, 9.420663e-002, 7.610057e-002, -1.906201e-002, -4.989157e-002, -8.710370e-003, -7.976533e-004, -3.912256e-002, -5.308728e-002, -5.504462e-002, -7.742770e-002, -3.114611e-002, 1.992246e-002, 4.412379e-002, 4.501142e-003, 1.513727e-002, -1.494621e-002, -9.943664e-003, 5.167815e-004, 2.707665e-002, 6.494409e-002, 6.789946e-002, 6.089233e-002, 4.390750e-002, 1.248588e-002, 1.417135e-002, 6.283507e-003, -2.080018e-003, 9.055161e-004, 8.722100e-003, 5.879578e-003, -3.212047e-002, -5.727958e-002, -2.125920e-002, -1.054904e-001, -8.323705e-002, 7.366523e-003, 6.686512e-002, 2.460081e-002, 4.439954e-002, 2.123127e-002, 8.009230e-003, -8.220742e-003, 1.974813e-002, 5.864715e-002, 3.810382e-002, -1.328998e-002, -8.094695e-002, -1.268222e-001, -8.629467e-002, -6.387929e-003, 3.274689e-002, 3.374222e-002, 2.528249e-002, 2.205160e-002, -2.036191e-002, -4.264174e-002, 3.898927e-002, 5.855306e-003, -8.885671e-002, -3.265584e-002, 4.710275e-002, 2.669028e-002, 7.332718e-002, 5.403289e-002, 3.262056e-002, 5.551703e-002, 4.603542e-002, 2.768711e-002, -4.257116e-002, -1.299342e-001, -1.823861e-001, -1.498712e-001, -3.272402e-002, 3.233752e-002, 4.561801e-002, 3.094708e-002, 2.939875e-002, 4.153944e-002, 9.587852e-004, -2.443076e-002, 5.604919e-002, 1.076352e-001, 5.422295e-002, 1.578559e-002, 3.596991e-002, 2.625834e-004, 4.221139e-002, 6.805909e-002, 4.941096e-002, 7.824092e-002, 1.185399e-001, 9.600027e-002, 2.416470e-002, -4.198509e-002, -4.722746e-002, -1.354359e-002, -2.628271e-003, -8.978740e-003, 3.234133e-002, -1.070369e-002, 3.425251e-003, 3.969723e-002, 3.106887e-003, -2.505597e-002, 4.697279e-002, 7.343710e-002, 5.004094e-002, 8.601375e-002, 1.139466e-001, -1.393653e-002, -1.168179e-002, 4.885594e-002, 3.545323e-002, 3.665036e-002, 8.178374e-002, 9.150810e-002, 6.519234e-002, 2.834331e-002, 2.521539e-002, 2.146057e-003, -7.073763e-002, -2.746185e-002, 7.452426e-002, -4.908659e-002, -6.428873e-002, -1.481375e-002, 5.503171e-003, -2.602306e-002, 1.147089e-002, 3.792453e-002, -8.693753e-002, -4.554484e-002, 2.917609e-002, 2.874431e-003, -4.310137e-002, 2.913632e-002, 1.262137e-002, -9.229638e-003, 6.950138e-003, 1.672523e-002, 1.237926e-002, 1.002405e-002, 2.432947e-002, -4.652690e-003, -6.131916e-002, 2.812056e-002, 8.383583e-002, -4.070414e-002, -6.830519e-002, -4.485186e-002, 2.959302e-002, 9.542211e-002, 6.818885e-002, 6.871883e-002, -8.084710e-002, -1.200233e-001, -6.157383e-002, 4.023196e-002, -5.716843e-002, 7.364472e-003, 6.121067e-003, -3.900626e-002, -3.280716e-002, -1.676061e-002, 2.184404e-003, 1.991700e-002, 3.877944e-002, 1.710140e-002, 9.264273e-003, 3.172557e-002, -1.523951e-002, -2.458065e-003, 4.372406e-002, -1.587508e-003, -8.531147e-003, 7.375767e-002, 6.090823e-002, 1.537057e-002, -5.262770e-002, -6.012891e-002, -4.307022e-002,

© ISO/IEC 2004 — All rights reserved


Copyright International Organization for Standardization
Provided by IHS under license with ISO
No reproduction or networking permitted without license from IHS
Not for Resale

6.082965e-002, -5.177310e-002, -4.024489e-003, 1.558969e-002, -4.989912e-002, -5.604526e-002, -4.323705e-002, -1.809263e-002, 9.459282e-003, 2.257604e-002, 1.809818e-002, 2.867487e-002, 6.814598e-002, 5.240027e-002, 4.513682e-002, 4.456692e-002, -4.391388e-003, 3.513096e-002, 8.710917e-002, 3.240697e-002, -6.796043e-002, -7.487069e-002, -3.881794e-003, 1.606517e-002, 3.353104e-002, -3.691847e-002, -1.957039e-002, 1.529801e-002, -5.303855e-002, -6.867108e-002, -5.337131e-002, -3.812520e-002, -1.508072e-002, -8.454453e-003, -7.444866e-003, -4.440343e-003, 3.758784e-002, 4.242240e-002, 2.652181e-002, 1.350746e-003, -2.875380e-002, -1.036843e-002, 2.451774e-002, 6.468211e-003, -5.692908e-002, -5.703316e-002, 5.705423e-003, 5.559886e-002, -5.804020e-003, -2.881388e-002, -3.240659e-002, 3.907255e-003, -5.752898e-002, -8.278455e-002, -5.301388e-002, -3.377502e-002, -9.332906e-003, -3.786338e-003, -1.474074e-002, -4.206656e-002, -3.946427e-002, -2.736705e-002, -1.648582e-003, 3.809446e-002, 5.096672e-002, -8.822597e-003, -5.021459e-002, -3.540472e-002, -2.672088e-002, -2.078995e-002, 1.279486e-002, 7.712091e-002, 1.005682e-002, -5.769563e-003, -2.650370e-002, -1.236217e-002, -4.697907e-002, -7.264690e-002, -1.609099e-002, 1.815438e-002, 3.265068e-002, 4.215083e-002, 1.052712e-002, -4.267390e-002, -8.219911e-002, -6.858960e-002, -1.686301e-002, 7.185823e-002, 1.298333e-001, 4.385770e-002, -6.537225e-002, -9.473234e-002, -4.809897e-002, 8.856950e-003, 3.357498e-002, 7.071441e-002, 4.221227e-002, 6.549255e-003, -4.173453e-003, -2.224449e-002, -3.176428e-002, -5.159712e-002, 2.509696e-002, 6.483656e-002, 4.307699e-002, 5.518950e-002, 5.468927e-002, 7.191999e-003, -5.804903e-002, -7.597223e-002, -2.875159e-002, 4.148102e-002, 6.797759e-002, 4.338375e-003, -6.964721e-002, -9.755684e-002, -6.315811e-002, 1.206681e-002, 1.803891e-002, 1.557486e-003, 2.961435e-002, -8.658840e-003, 3.666848e-002, -1.759670e-002, -1.858989e-002, -1.725134e-002, 4.905017e-002, 4.698042e-002, -5.306312e-002, -5.878945e-002, 2.795826e-002, 5.611981e-002, 2.144021e-003, -4.930875e-002, -3.114864e-002, 2.238317e-002, 3.322936e-002, -7.836627e-004, -4.058140e-002, -3.308960e-002, 2.118806e-002, 7.332993e-002, 2.551792e-002, -9.431274e-002, -1.681569e-002, -2.218533e-002, 3.462288e-002, 1.520034e-002, -4.877274e-003, 1.233551e-002, 5.434929e-002, 2.107294e-002, -9.016840e-002, -7.083070e-002, 2.940066e-002, 5.889959e-002, 5.608944e-003, -2.276212e-002, -1.875482e-002, 1.309389e-003, 1.583680e-002, -1.478757e-003, -3.723990e-002, -4.305126e-002, -1.038878e-002, 3.658778e-002, 1.118954e-002, -8.406837e-002, -3.245368e-002, -1.470751e-002, 1.649898e-002, 3.853579e-002, 8.150093e-003, 1.897272e-002, 4.557048e-002, 2.152381e-002, -4.363592e-002, -3.088546e-002, 1.666114e-002, 9.330852e-003, -3.329036e-002, -5.059694e-002, -2.454807e-002, -6.341194e-003, 2.324224e-003, -2.557441e-004, -1.329336e-002, -5.054098e-003, 2.051992e-002, 5.212751e-002, 3.614439e-002, -1.478406e-002, -4.211039e-003, 1.945182e-002, 2.287892e-002, 1.139070e-002, 3.458335e-003, 5.587821e-003, 4.232574e-003, -1.383768e-002, -1.397002e-002, -4.091068e-004, 3.095168e-002, 3.933039e-002, 9.711533e-003, -1.578206e-002, -1.247387e-002, -8.813461e-003, -6.235830e-003, -1.446978e-002, -3.010105e-002, -4.545396e-002, -3.322068e-002, -7.334254e-003, 1.067111e-002, 1.410445e-002, 1.029035e-002, 2.564973e-003, 1.994508e-002, -2.046803e-002, -2.352548e-002, 4.365466e-003, -6.459306e-003, -3.097245e-002, 2.101377e-003, 4.346245e-002, 5.113065e-002, 4.192046e-002, 1.844269e-002, -1.346058e-002, -2.317098e-002, -1.392454e-002, -8.895089e-003, -1.064423e-003, 4.605648e-003, 9.726735e-003, 1.103718e-002, 9.658200e-003, 2.286751e-002, 3.113339e-002, 2.035602e-002, -5.559754e-002, -1.047483e-002, -1.802419e-002, -5.397228e-002, 4.475545e-003, 7.709202e-003, -3.514031e-002, -4.511110e-003, 4.805394e-002, 3.314890e-002, -5.579389e-003, -2.906997e-002, -5.476119e-002, -5.873242e-002, -3.314204e-002, -2.469530e-003, 1.237222e-002, 2.113601e-002, 2.786619e-002, 3.351506e-002, 2.770124e-002, 3.076219e-002, 2.811754e-002, 1.291243e-002, -3.927831e-002, -6.127954e-004, 2.120924e-002, -2.362904e-002, 2.369468e-002, 4.300844e-002, -1.260272e-002, -9.675217e-003, 4.171004e-002, 3.388977e-002, -8.689589e-003, -1.618490e-002, -6.549966e-003, 1.091109e-002, 3.105882e-002, 2.942892e-002, 1.292989e-002, -8.573079e-004, 9.867478e-004, 1.864943e-003, -7.235002e-003, -2.721621e-003, 1.768393e-002, 8.209013e-003, 2.872030e-002, 2.556109e-002, 2.445168e-002, -6.467447e-003, 2.772601e-002, 4.690206e-002, 2.083849e-002, 1.283860e-002, 3.473544e-002, 3.299902e-002, 6.557218e-003, -7.266403e-004, 1.523173e-002, 4.153349e-002, 5.087081e-002, 2.274270e-002, -5.640733e-003, -1.928932e-002, -1.278750e-002, -1.361589e-002, -2.520864e-002, -1.818459e-002, 9.381902e-003, -3.755444e-002, 2.682481e-002, -1.567342e-004, -3.285235e-004, -1.189685e-002, 2.062399e-002, 2.118358e-002, 1.621145e-002, 1.558882e-002, 1.143161e-002, 1.104358e-002, 5.509545e-004, -1.121018e-002, -8.204542e-003, -1.387611e-003, -6.336310e-003, -2.444058e-002, -2.729761e-002, -1.661681e-002, 9.580904e-003, 8.374462e-003, -1.824113e-002, -2.319291e-002, -4.956603e-003, -8.499264e-002, 1.519205e-002, -2.063565e-002, -1.284335e-002, -1.122148e-002, 6.811746e-003, -2.531131e-002, -3.469401e-002, -1.362037e-002, -3.840857e-002, -4.228972e-002, -2.569239e-002, -1.165931e-002, -1.263137e-002, -2.124433e-002, -3.028936e-002, -2.682252e-002, -1.027383e-003, 2.866139e-002, 5.067958e-002, 3.145544e-002, -8.021168e-003, -1.591057e-002, -7.142322e-003},
{8.595023e-002, 8.569274e-003, 4.319646e-002, 4.789183e-002, 5.515471e-002, -3.335210e-003, -3.704449e-002, 4.842728e-003, 6.652404e-002, 7.433845e-002, 5.456862e-002, 8.941270e-002, 1.098705e-001, 8.507431e-002, -6.431953e-002, -5.001189e-002, -3.600171e-002, -8.097353e-002, -1.668302e-001, -1.041960e-002, 1.491586e-002, -2.180781e-002, -1.837266e-002, 5.846222e-002,


© ISO/IEC 2004 — All rights reserved

Copyright International Organization for Standardization
Provided by IHS under license with ISO
No reproduction or networking permitted without license from IHS
Not for Resale

5.014447e-002, 4.247639e-003, 1.585096e-002, -1.038995e-002, 3.178904e-002, 3.989646e-002, 7.006313e-003, -2.396798e-002, -4.406333e-002, -4.202213e-002, -3.028817e-002, 3.174149e-004, 4.537389e-002, -3.052773e-003, -8.548368e-002, -1.774659e-002, -1.486017e-002, -1.512865e-002, -1.171888e-001, 5.769019e-002, 1.514218e-001, 2.435429e-002, -6.049385e-002, -9.310493e-002, 6.210120e-003, 1.033378e-002, 1.933631e-002, -7.477865e-002, -1.801839e-002, 2.795854e-002, -4.216356e-003, -5.242275e-002, -7.449908e-002, -6.171321e-002, -3.703085e-002, -3.012722e-002, 1.313101e-002, -5.190587e-002, -1.282998e-002, -2.827956e-003, -9.150591e-003, 2.774063e-002, -2.546471e-002, 3.447283e-002, 2.189864e-001, 9.017854e-002, -4.603265e-002, -1.301143e-001, -4.107682e-002, -1.088862e-002, 5.663535e-002, -6.978318e-002, -6.210767e-002, 1.718887e-003, -8.958912e-003, -4.527904e-002, -4.639924e-002, -2.178616e-002, -2.737343e-003, 2.203704e-002, 4.935863e-003, -2.571536e-002, 5.122342e-002, 5.740076e-003, -2.074076e-003, 4.113877e-002, 4.846356e-002, -2.818581e-002, 8.746295e-002, 1.024428e-001, -1.374455e-002, -1.160115e-001, -3.531575e-002, -2.931186e-002, 5.938384e-002, 9.826618e-003, -2.715577e-002, 3.489661e-004, -4.881151e-003, -1.625821e-002, -3.302344e-004, 3.822239e-002, 6.926258e-002, 3.557322e-002, -2.740608e-002, 4.221756e-002, 7.389585e-002, 4.778570e-003, 9.279358e-004, 2.950281e-002, 6.636914e-002, -1.107859e-003, -7.472022e-002, -4.738682e-002, -5.797649e-002, -9.723103e-002, -1.035233e-003, -1.511368e-002, 3.057627e-002, 3.222870e-002, 4.134594e-002, 6.463242e-002, 7.042402e-002, 7.376052e-002, 8.213290e-002, 8.168546e-002, 4.286804e-002, -4.062480e-002, -4.523355e-002, 4.335508e-002, 2.951449e-002, 3.495692e-003, -6.231996e-004, 1.124745e-002, 3.509943e-002, 1.391992e-002, -3.985654e-002, -9.756377e-002, -1.427581e-001, -1.402188e-001, 3.564361e-002, 7.746513e-003, 1.290042e-002, -3.186357e-003, 2.540683e-002, 6.576838e-002, 6.359990e-002, 5.351068e-002, 5.425354e-002, 3.741105e-002, 9.879904e-003, -3.215201e-002, -7.618235e-002, -4.948818e-002, -4.431508e-002, 3.520011e-003, -1.377852e-002, -3.907668e-002, -1.768385e-002, -2.223647e-002, -9.718942e-003, 4.773683e-002, -1.971966e-002, -7.409785e-002, 3.904406e-002, 1.783428e-002, -4.876640e-003, -2.993394e-002, -1.286660e-002, 1.768360e-002, 2.517422e-002, 2.164180e-002, 2.023318e-002, 2.257637e-002, 6.259595e-002, 2.972747e-002, -2.115978e-002, 2.522422e-002, -4.249784e-002, 8.159590e-003, 4.155230e-002, 4.742831e-002, 6.264121e-002, 1.777146e-002, -3.792620e-002, 7.431136e-002, 9.607582e-002, 3.171220e-002, 1.614678e-002, 7.363995e-003, -2.069559e-002, -6.067825e-002, -4.301321e-002, -2.797135e-002, -2.014454e-002, -2.009799e-002, -1.519958e-002, 4.435984e-002, 1.140600e-001, 5.857307e-002, -7.989071e-003, -5.148978e-002, -1.510509e-001, -3.744621e-002, 4.671796e-002, 5.885848e-002, 7.618273e-002, 6.480780e-002, -4.991676e-002, 4.636808e-003, 6.172251e-002, 3.849398e-002, -1.866805e-002, -2.576741e-002, -2.293061e-002, -6.644778e-002, -5.491829e-002, -4.532393e-002, -5.358470e-002, -5.431804e-002, -2.663829e-002, 5.439143e-002, 7.623122e-002, 2.570925e-002, -3.176256e-002, -1.241834e-002, -8.890256e-003, 8.799998e-004, -1.376040e-002, 2.221381e-002, 6.258065e-002, -1.504499e-003, -1.003954e-001, -5.034562e-002, -5.067740e-003, 4.379827e-003, -1.295549e-002, -3.072670e-002, -1.159757e-002, -5.211709e-002, -3.967955e-002, -2.419855e-002, -4.543270e-002, -4.388470e-002, -1.210257e-002, 1.405195e-002, 4.969086e-003, -1.421680e-002, -1.427242e-002, -3.282576e-003, 1.545438e-002, 1.419010e-002, -2.952168e-002, 1.464608e-002, -7.204563e-003, -7.275927e-002, -1.106129e-001, -5.336289e-002, -9.582117e-003, -1.299615e-002, 4.001436e-002, -6.677833e-003, 1.206653e-002, -1.190761e-002, -9.049034e-003, 1.575773e-002, -1.686988e-002, -2.413760e-002, -1.150357e-002, -6.161137e-003, -1.291789e-002, -1.572315e-002, -9.408167e-003, -1.261053e-002, 1.005165e-002, 1.626247e-002, -6.604282e-003, 3.939457e-002, -1.703007e-002, -8.665734e-002, -8.674790e-002, -2.215467e-002, 1.221113e-002, -1.443847e-003, 3.094358e-002, 2.350005e-003, 8.864450e-003, 3.146003e-002, 2.449092e-002, 4.573109e-002, 7.792074e-003, -1.689400e-002, -9.422646e-003, -1.224700e-002, -3.018317e-002, -2.883998e-002, -8.347955e-003, 2.166568e-002, 4.251288e-002, 1.861112e-002, -2.213927e-002, -1.832449e-002, -3.091405e-002, -5.005027e-002, -5.442289e-002, -1.033694e-002, 2.952119e-002, 1.960523e-002, 4.361540e-003, -1.019252e-002, -3.904324e-003, 4.594311e-002, 3.947231e-002, 5.727145e-002, 2.011673e-002, -2.186652e-002, -1.092641e-002, -2.798934e-002, -6.088109e-002, -4.354651e-002, 7.697892e-003, 5.749600e-002, 5.229991e-002, 2.031340e-002, -2.541336e-002, -2.748463e-002, -1.201415e-002, 1.383721e-002, 3.289617e-002, 4.749830e-002, 5.220821e-002, 3.220784e-002, -4.989916e-003, -3.744948e-002, -2.200391e-002, 3.107679e-002, 2.346863e-002, 3.620934e-002, 8.541717e-003, -1.889792e-002, 3.673725e-002, 2.379690e-002, -4.175016e-002, -3.605743e-002, 2.282970e-002, 4.200261e-002, 3.535821e-002, -2.922321e-004, -4.601444e-002, -4.161823e-002, -1.764669e-002, 2.369872e-002, 3.760470e-002, 1.616060e-002, -1.148326e-003, 2.129819e-002, 2.180085e-002, -4.251594e-002, 4.036258e-003, 5.547419e-003, -2.921933e-003, -7.127940e-003, -1.666559e-002, -1.555430e-002, 4.967903e-002, 5.037162e-002, -1.098923e-002, -3.130598e-002, 9.986395e-003, 3.734027e-002, 2.871414e-002, -1.685630e-002, -6.236875e-002, -3.775822e-002, -1.164355e-002, 8.015951e-003, 3.571838e-002, 3.557826e-002, 1.570871e-002, 1.492204e-002, 5.289141e-002, -3.727982e-002, 3.189109e-002, -1.577389e-002, -1.642698e-002, -2.993590e-002, -4.067309e-002, -2.651169e-002, 1.076521e-002, 8.188012e-003, 1.234157e-002, 2.303848e-002, 2.925352e-002, 9.940770e-003, -5.681897e-003, -2.380986e-002, -3.118985e-002, -1.227985e-003, 3.328486e-002, 4.635388e-002, 6.102896e-002, 6.099333e-002, 5.760282e-002, 3.721466e-002,

© ISO/IEC 2004 — All rights reserved


Copyright International Organization for Standardization
Provided by IHS under license with ISO
No reproduction or networking permitted without license from IHS
Not for Resale

3.303571e-002, -3.595451e-002, 4.958191e-002, -1.518757e-002, -1.597643e-002, -2.187731e-002, -1.562136e-002, 6.530663e-003, -3.020759e-003, -2.397879e-002, 1.117253e-002, 5.473086e-002, 6.178751e-002, 2.113631e-002, -2.471945e-002, -5.134653e-002, -4.530264e-002, -2.379967e-002, 6.472641e-004, 2.015213e-002, 2.807196e-002, 1.990805e-002, 1.724193e-002, 2.707869e-002, -7.765637e-003, -4.099689e-002, 2.657568e-002, -2.166205e-002, -1.343837e-002, 2.123839e-003, 1.964471e-002, 3.346418e-002, 9.468642e-003, -4.044759e-002, -2.524879e-002, 6.626916e-003, 1.400956e-002, -1.662101e-003, -2.183799e-002, -2.779657e-002, -1.727481e-002, 6.678779e-004, 1.150273e-002, 9.650808e-003, -1.264662e-003, -1.719781e-002, -3.922542e-003, 1.063358e-002, -4.875439e-002, -4.740528e-002, -6.498786e-003, -6.712897e-002, -1.464690e-002, 1.015553e-002, 1.888044e-002, 3.640310e-002, 1.864870e-002, -2.933586e-002, -3.608597e-002, -2.945378e-003, 3.472332e-003, -1.752584e-002, -4.582861e-002, -6.103846e-002, -4.951585e-002, -1.310463e-002, 2.446614e-002, 3.165440e-002, 7.128015e-003, -1.971815e-004, 1.928669e-002, 1.739000e-002, -2.807731e-002, -4.584472e-002, 1.767993e-002, -7.099730e-002, 7.062568e-003, 1.000868e-002, -1.631231e-002, 3.120801e-003, 2.875138e-002, 4.510656e-003, 5.898115e-003, 2.695168e-002, 3.020091e-002, -1.067180e-002, -4.843775e-002, -6.994456e-002, -4.977655e-002, 3.726282e-003, 5.150359e-002, 5.253872e-002, 3.239347e-002, 4.055752e-002, 3.765689e-002, 1.094220e-002, -1.824223e-002, -4.532233e-002, 3.512183e-002, -4.270353e-002, 8.167890e-003, -8.593949e-003, -4.944954e-002, -4.332020e-002, 9.444838e-004, 2.129519e-002, 1.906564e-002, 2.620459e-002, 2.841448e-002, -1.714662e-003, -4.352823e-002, -7.064839e-002, -6.638559e-002, -3.072336e-002, 6.161938e-003, 1.427479e-002, 2.113487e-002, 2.659725e-002, 9.585616e-003, -1.903393e-002, 1.009354e-002, -2.057781e-003, 4.597173e-002, -2.544297e-002, 2.780613e-002, -1.736655e-002, -2.569540e-002, -8.787369e-003, -2.166319e-003, 1.320053e-002, 8.877586e-003, 6.093104e-003, 1.731675e-002, 6.423454e-003, -1.438695e-002, -2.846642e-002, -3.303014e-002, -2.925455e-002, -1.857777e-002, -1.174535e-002, 6.510641e-003, 4.375823e-003, -1.531950e-004, -9.027769e-003, 3.379447e-002, 6.857415e-003, 4.168847e-002, 3.151720e-003, 8.105288e-002, 2.691837e-002, 3.940928e-002, 6.955094e-002, 4.104868e-002, 2.177802e-002, 2.000032e-002, 1.631892e-002, 1.173943e-002, 2.010667e-002, 2.483691e-002, 2.302924e-002, 8.062137e-003, -5.730394e-003, -7.673446e-003, -4.821774e-003, 1.905367e-002, 2.572686e-002, 4.409741e-002, 3.476180e-002},
{-6.860478e-003, -2.269206e-002, -4.044425e-002, 4.006428e-002, 1.252510e-001, 6.069920e-002, 2.141290e-002, 5.679070e-002, 6.239799e-002, 7.619900e-002, 9.608001e-002, 3.410390e-002, -1.044039e-002, 7.465703e-002, 2.394944e-002, -2.246175e-002, -1.801608e-002, -3.499370e-002, 1.631445e-002, 1.043003e-001, 2.210296e-002, 4.135365e-002, 1.097148e-001, 9.906861e-002, 2.816714e-003, 1.338292e-002, 1.033873e-003, 2.181442e-002, 4.694205e-002, -3.516850e-002, -8.705534e-002, -6.178433e-002, -4.143956e-002, -3.051944e-002, -4.227060e-002, -8.761443e-002, -8.330818e-002, 2.712263e-003, -6.805725e-002, -1.072387e-004, 1.023282e-002, -1.907773e-002, -7.647801e-002, 1.270601e-002, -5.009901e-002, -8.371040e-002, -5.451191e-002, -2.469303e-002, 2.897627e-003, 3.717968e-002, 7.278840e-002, 4.078366e-002, 1.089194e-002, -3.952261e-002, -4.355373e-002, -1.254165e-002, 1.431073e-003, 1.384539e-002, -8.547473e-003, -7.699027e-002, -5.737711e-002, -5.783152e-002, -6.984560e-002, 2.754711e-002, 2.405925e-002, 5.162947e-005, -8.636265e-002, -7.122180e-002, -2.591467e-002, -3.842295e-002, -3.947960e-002, -2.951505e-002, 7.540378e-003, 4.227681e-002, 1.082785e-001, 6.001318e-002, -7.443046e-003, -4.910720e-002, -4.626049e-003, 4.971035e-002, 7.428245e-002, 6.871517e-002, 2.348430e-002, -2.208038e-002, -7.210621e-003, -6.985736e-002, -1.430245e-002, 4.373504e-002, 3.037955e-002, 2.870342e-003, -3.132058e-002, -1.005052e-001, -3.780084e-002, 6.037455e-003, 2.913039e-002, 4.741725e-002, 8.730431e-003, 2.099821e-002, 8.034791e-002, 7.353090e-002, 5.763074e-003, -5.716171e-002, -1.113457e-002, 4.921078e-002, 6.729355e-002, 6.337031e-002, 5.410010e-002, 5.000202e-002, 5.827080e-003, -2.066103e-002, 5.233932e-003, 2.483680e-002, 7.558592e-003, -1.893634e-002, -6.602531e-003, -2.635798e-002, -6.459206e-002, -2.300769e-002, 1.693649e-002, 4.967452e-002, 3.159447e-003, -1.127194e-004, 2.378294e-002, 5.215789e-002, 2.283136e-002, -3.554596e-002, -1.317655e-002, 3.857760e-002, 7.056529e-002, 7.947403e-002, 7.257174e-002, 3.398966e-002, 3.337393e-002, 3.943550e-002, -1.281503e-002, 7.169428e-003, -1.211847e-002, -4.623330e-002, -1.260037e-002, 9.321549e-002, 3.455977e-002, -3.083059e-002, -2.311951e-002, 1.571152e-002, 8.932644e-003, -1.279365e-002, -2.162759e-002, 1.601352e-003, 6.059259e-003, -2.202189e-002, -1.431532e-002, 3.078715e-002, 5.652333e-002, 4.020930e-002, -1.705189e-002, -3.267344e-002, 1.006563e-001, 6.852663e-002, -3.000933e-002, -5.619473e-003, -1.961038e-002, -8.285169e-003, 1.951105e-002, 1.400901e-001, 1.336143e-001, 2.472367e-002, 1.332864e-003, 1.178580e-002, 4.414567e-002, 1.846691e-003, -4.761019e-002, -4.211505e-002, -4.311777e-002, -6.544318e-002, -6.576464e-002, -3.648974e-002, -2.190583e-002, -4.575267e-002, -8.859680e-002, -7.991074e-002, 4.193734e-002, 1.589359e-002, -4.878690e-002, -5.006171e-002, -6.179522e-002, 4.993588e-002, 5.359906e-002, 2.952341e-002, 3.357527e-002, -3.325814e-002, -2.405412e-002, -3.696798e-003, 6.320565e-002, 2.833504e-002, -5.330005e-002, -6.585385e-002, -5.963562e-002, -7.256511e-002, -8.026784e-002, -5.593857e-002, -2.039814e-002, -2.300142e-002, -3.868588e-002, -6.346995e-002, -9.774295e-002, -8.621901e-002, 4.875877e-003, -5.216450e-003, -1.935982e-002, 7.859583e-002, 6.585858e-002, -8.918595e-002, -1.132188e-001, -8.746011e-002, -3.906372e-002, -1.841466e-002,


© ISO/IEC 2004 — All rights reserved

Copyright International Organization for Standardization
Provided by IHS under license with ISO
No reproduction or networking permitted without license from IHS
Not for Resale

8.409104e-002, 4.612708e-002, -2.461506e-002, -5.677781e-002, -5.222953e-002, -4.684733e-002, -3.989256e-002, -4.234357e-003, 3.903720e-002, 4.538464e-002, 5.486142e-002, 3.661625e-003, -8.061502e-002, -1.159227e-001, -2.212057e-005, 6.138964e-002, 7.005199e-002, 1.048464e-001, 5.256075e-002, -5.176963e-002, -7.362889e-002, -3.374496e-002, 1.337528e-002, 2.052567e-002, 3.580498e-002, 1.715952e-002, -8.421773e-003, -2.392480e-002, -2.563085e-002, -1.312108e-002, 1.491143e-002, 3.780615e-002, 7.130802e-002, 6.436459e-002, 2.817509e-002, 1.090749e-003, 1.173201e-003, 1.526237e-002, 3.396560e-002, -8.759636e-003, -2.928143e-002, 3.086661e-002, 3.508349e-002, 3.519766e-002, 2.773334e-002, 3.427884e-002, 5.341194e-002, 5.834744e-002, -6.242410e-002, -2.937199e-002, -1.594363e-002, 1.391944e-003, -5.024939e-004, 2.975287e-003, 4.616410e-002, 4.828918e-002, 2.650325e-002, -9.629861e-003, -4.497498e-002, -1.717991e-002, 5.633070e-002, 1.308582e-001, 1.151239e-001, 4.088929e-003, -4.504599e-002, 8.075582e-003, 3.603326e-002, 4.604372e-002, 4.313429e-002, 3.316018e-002, 2.599961e-002, 3.864089e-002, -7.550743e-002, -3.511956e-002, -2.810415e-002, 2.309929e-002, 3.146511e-002, 2.171222e-002, 4.387693e-002, 1.329377e-002, -5.160590e-002, -7.905219e-002, -6.777462e-002, -2.194474e-002, 2.247703e-002, 4.957219e-002, 4.594085e-002, 8.865017e-003, -3.526696e-002, -5.101047e-002, -4.228041e-002, -6.744325e-003, 2.051623e-002, 8.631236e-003, -2.174249e-002, -2.796941e-002, -9.066616e-003, 5.478451e-003, -1.972261e-002, 1.715205e-002, 4.823867e-002, 2.749463e-002, 1.808675e-002, -1.991029e-002, -5.765254e-002, -3.605684e-002, -1.284827e-002, -3.273610e-002, -5.918131e-002, -4.001940e-002, -6.579108e-004, 2.389850e-002, 2.097322e-002, 1.226327e-003, -2.582100e-002, -2.831208e-002, -1.333712e-002, 2.219219e-002, 9.395468e-003, -2.708245e-002, 3.018110e-002, 3.491476e-002, 6.385195e-003, 1.000658e-003, 4.198179e-002, 2.153181e-002, -5.784433e-003, -1.763912e-002, 3.356630e-004, 4.633475e-002, 5.756137e-002, 4.033802e-003, -2.451419e-002, -5.608555e-003, 3.855327e-004, -2.040706e-002, -1.671574e-002, -2.667945e-002, -3.291480e-002, -4.852680e-002, -4.587701e-002, 2.838881e-003, 2.910971e-002, -1.041617e-003, 2.027008e-002, 1.228361e-002, 1.934320e-002, -2.882038e-002, 1.690991e-002, 1.157137e-002, -2.026305e-002, -1.827862e-002, -1.400895e-002, -2.238641e-002, 1.013355e-002, 4.512104e-002, 4.505228e-002, 2.556192e-002, -1.050150e-002, -7.236990e-002, -8.523121e-002, -7.664313e-002, -2.159354e-002, 3.539143e-002, 5.503724e-002, 3.557423e-002, 4.256366e-003, 5.129138e-003, -3.307603e-002, -5.100604e-002, 5.532028e-003, -4.207243e-002, -1.118721e-002, 2.501362e-002, 3.060619e-003, -1.640425e-002, -1.674499e-002, -2.285309e-002, -6.845256e-005, 4.193770e-002, 4.868219e-002, 2.758368e-002, -1.143074e-003, -2.507491e-002, -2.525905e-002, -1.664939e-002, 4.947054e-003, 2.322813e-002, 2.029367e-002, -4.011550e-003, 8.555687e-003, 4.939168e-002, -6.517091e-002, -9.083663e-002, -2.613941e-002, -3.324128e-002, -2.925430e-002, 3.394856e-002, 2.166910e-002, -1.331633e-002, -4.820732e-004, 1.843698e-002, 2.259792e-002, 3.208279e-002, 3.042860e-002, 2.449966e-002, 8.287578e-003, -1.735766e-002, -2.793062e-002, -3.090852e-002, -4.257961e-002, -4.302692e-002, -4.464156e-002, -4.395031e-002, 2.616334e-003, 4.171935e-002, -3.853402e-002, -5.155494e-002, 1.031533e-002, -1.663149e-002, -1.418249e-002, 1.128992e-002, -3.610020e-003, -4.947093e-002, -3.956130e-002, 3.757130e-003, -6.502429e-003, -7.064864e-003, 2.979645e-003, 1.153931e-002, 1.773070e-002, 1.101319e-002, -1.059622e-003, 1.193722e-003, 1.227005e-002, 1.914992e-002, 2.049070e-002, 1.670998e-002, 1.682713e-002, 2.026430e-002, 7.883748e-003, 2.453734e-002, 8.129544e-002, -1.827052e-002, -4.316794e-003, -1.476673e-002, -2.537761e-002, -6.957604e-002, -7.172666e-002, -2.807630e-002, -1.573696e-002, -3.377321e-002, -3.276143e-002, -2.495223e-002, -2.024491e-002, -2.034015e-002, -2.546752e-002, -2.059914e-002, 2.113214e-003, 2.469736e-002, 2.970674e-002, 1.975253e-002, 4.255987e-003, -1.602790e-004, 2.139603e-002, 1.246702e-002, 8.733398e-002, -3.911107e-002, 1.176608e-002, 2.570168e-003, -1.967536e-002, -3.970340e-002, -5.362403e-002, -1.679244e-002, 1.777856e-002, 2.461804e-002, 2.342124e-002, 2.282635e-002, 2.104406e-002, 2.015834e-002, 1.412784e-002, 1.694076e-002, 2.125112e-002, 1.640085e-002, 1.310410e-003, -1.845741e-002, -2.261051e-002, -1.558996e-002, -2.783249e-003, -5.532634e-002, 3.591013e-002, -2.642472e-002, 4.321156e-002, 2.659406e-002, -1.061145e-002, -1.657064e-002, -1.844923e-002, 6.148382e-003, 3.321648e-002, 4.196042e-002, 4.006470e-002, 3.391368e-002, 1.971480e-002, 1.022886e-002, 6.244871e-003, 6.429502e-003, -3.766104e-003, -2.044380e-002, -3.933165e-002, -4.305678e-002, -3.498205e-002, -2.689256e-002, 2.910030e-002, -5.158791e-002, 3.697578e-002, 2.278464e-003, 2.522207e-002, 5.974786e-005, -4.494576e-003, -1.504161e-002, -1.076669e-002, -3.509834e-003, 1.284735e-002, 2.901916e-002, 2.142087e-002, -2.809778e-003, -1.184496e-002, -1.954989e-002, -1.821655e-002, -5.886047e-003, -1.025937e-002, -1.884493e-002, -2.956049e-002, -2.555358e-002, -1.941903e-002, -4.533622e-002, 1.049614e-001, 1.148941e-002, 6.331355e-002, 2.669321e-003, -2.002092e-002, -3.827905e-002, -9.326166e-003, -6.411875e-003, -1.866674e-002, -2.162124e-002, -2.141302e-002, 5.925931e-003, 1.036879e-002, -6.675429e-003, -1.117025e-002, 3.887227e-003, 2.803147e-002, 5.208039e-002, 6.107529e-002, 5.473558e-002, 4.152817e-002, 2.230438e-002, -1.354786e-002, -6.804862e-002},
{3.988114e-002, 7.528994e-002, 1.025825e-001, 6.560285e-002, -9.130995e-003, 1.726975e-002, 8.126884e-002, 7.484476e-002, -7.776901e-006, -8.976886e-002, -1.287961e-001, -8.318754e-002, -1.307846e-002, -5.816859e-002, 1.191252e-002, 1.523273e-002, 1.430094e-002, 4.022262e-002, 2.013375e-003, 4.939961e-002, 1.747492e-002, 2.210457e-004, 1.930156e-002, 2.371535e-003,

© ISO/IEC 2004 — All rights reserved


Copyright International Organization for Standardization
Provided by IHS under license with ISO
No reproduction or networking permitted without license from IHS
Not for Resale

1.130070e-002, 1.214154e-002, 4.171471e-002, 5.312152e-002, -2.305204e-002, -9.118703e-002, -1.190900e-001, -1.254510e-001, -1.368803e-001, -1.170245e-001, -3.962278e-002, 8.730664e-002, 9.843590e-002, -4.144973e-002, 2.446427e-002, -1.854832e-002, -6.700480e-003, 1.922339e-002, 6.338848e-003, 3.188749e-002, 4.578322e-002, -1.230398e-002, -4.949796e-002, -8.031332e-002, -2.419308e-002, -5.313133e-002, -4.412479e-002, 4.919209e-002, 2.443845e-002, -4.028932e-002, -5.859923e-002, -4.045373e-002, -9.491271e-003, 4.461862e-002, 1.225433e-001, 1.841286e-001, 5.996244e-002, 2.137191e-003, 2.844299e-002, -1.620901e-002, -5.823545e-003, 1.009107e-002, 2.364403e-002, 1.801788e-003, 4.313969e-002, 5.114239e-002, 2.359429e-002, -1.207130e-002, -3.489850e-002, -5.012341e-002, -9.926273e-002, 1.374236e-002, 5.545821e-002, 2.260978e-002, 1.602728e-002, 3.306011e-002, 5.970646e-002, 9.231620e-002, 1.090257e-001, 7.927294e-002, -4.139369e-003, 3.872167e-002, 3.296370e-002, -8.288324e-003, 3.400138e-003, -1.268401e-002, -1.502132e-003, 2.444997e-002, -2.531778e-002, 9.947539e-004, 2.865858e-002, 2.347504e-002, -2.759930e-002, -1.902528e-002, -8.490616e-002, -2.794339e-002, 1.259576e-002, -1.268212e-002, -1.048467e-002, -1.126398e-002, -6.039374e-003, -2.027926e-002, -3.445492e-002, -3.652500e-002, -2.280755e-003, 5.241433e-002, 1.704551e-002, -2.031672e-002, 4.101639e-003, -3.705654e-002, -5.235533e-002, 5.086858e-002, 2.871053e-002, -5.640958e-002, -6.734611e-002, -5.047665e-002, -2.910986e-002, 2.158188e-002, -3.080303e-002, 2.453890e-004, 5.378535e-003, -4.421988e-002, -8.851876e-002, -1.327026e-001, -1.489307e-001, -1.072935e-001, -3.447482e-002, -4.283523e-002, -1.580156e-002, 3.371656e-002, -1.282047e-002, -9.111416e-003, 3.414943e-002, -1.528014e-002, -6.675257e-002, 5.682260e-003, 5.177663e-002, 1.096686e-002, -6.665211e-002, -9.875536e-002, -3.224311e-002, 3.342075e-002, 8.121693e-003, 3.117919e-002, 5.031633e-002, 2.855076e-002, 4.433585e-003, -1.733514e-002, -2.051334e-003, 5.327708e-002, 1.882744e-002, -9.183145e-002, -7.585947e-003, 5.177277e-002, -2.568813e-002, -2.673555e-002, 3.356357e-002, 8.607585e-003, 5.184975e-003, 5.659917e-002, 2.554176e-002, 6.491621e-003, 1.345555e-002, 2.678879e-003, -3.522954e-002, 3.112810e-002, 6.718760e-003, 1.599744e-002, 4.007636e-002, 5.100532e-002, 6.593024e-002, 8.112519e-002, 1.078737e-001, 9.143455e-002, -2.090173e-002, -1.141627e-001, 2.147791e-002, 6.102329e-002, -5.925621e-003, -3.071734e-002, -1.569707e-002, -3.081079e-002, 1.473868e-003, 7.371616e-002, 1.438383e-002, -6.044990e-002, -1.415650e-002, 3.945969e-002, -1.612054e-002, 1.449056e-002, -1.048208e-002, -2.483251e-002, -1.512764e-002, -3.480177e-003, 1.739484e-002, 5.174615e-002, 6.930569e-002, 3.718344e-002, -1.003434e-002, -4.944320e-002, -4.305946e-003, -5.943671e-003, -1.725370e-002, -3.020162e-003, 2.673340e-002, 3.265245e-002, -1.364358e-002, -3.825648e-002, -6.067780e-002, -8.567273e-002, -6.825543e-002, -1.561351e-002, -7.653405e-003, -3.089151e-003, -2.080287e-002, -5.666983e-002, -6.097669e-002, -6.832523e-002, -5.568479e-002, -8.599796e-003, 2.841783e-002, 5.459457e-002, 7.243324e-002, 3.281306e-003, -6.741238e-002, -4.944852e-002, -1.408437e-002, -5.614532e-003, 2.145758e-002, 9.227486e-002, 8.297983e-002, -3.385472e-002, -8.331867e-002, -4.179305e-002, -2.610439e-002, -2.525094e-002, -3.734612e-002, -1.152329e-002, -1.674152e-002, -5.368251e-002, -6.878066e-002, -8.375111e-002, -8.278847e-002, -2.225506e-002, 5.024626e-002, 1.207878e-001, 1.158286e-001, 2.393359e-002, -4.722324e-002, -6.000288e-002, -5.088511e-002, -3.928936e-002, 3.007184e-002, 7.380676e-002, 1.067857e-002, -7.416256e-002, -9.542288e-002, -2.711152e-002, 4.103027e-002, 4.681754e-002, -5.180397e-002, -1.694827e-002, 7.352569e-003, -2.535677e-002, -3.906983e-002, -6.047779e-002, -6.904989e-002, -6.687424e-003, 6.447382e-002, 7.949477e-002, 5.533793e-002, 1.068281e-002, 2.398586e-003, -5.586380e-003, -1.479408e-002, -1.174537e-002, 6.558175e-002, 5.484913e-002, -2.835823e-003, -5.044188e-002, -7.077543e-002, -3.746673e-002, 3.661122e-002, 8.383552e-002, -5.417706e-003, -3.756107e-003, 2.354180e-002, 8.852936e-004, 3.253725e-003, -7.395726e-003, -1.713202e-002, 1.277447e-002, 2.647747e-002, -1.152147e-002, -1.996284e-003, 1.908324e-002, 2.781520e-002, 1.056750e-002, -2.429764e-002, -1.974343e-002, 1.994036e-002, -1.935669e-003, -1.765634e-002, -3.685266e-002, -4.575491e-002, -3.514756e-002, 1.497136e-002, 7.064557e-002, 4.130140e-002, 2.099315e-002, 1.915954e-002, 9.985943e-003, 2.691428e-002, 4.144803e-002, 4.156418e-002, 2.383123e-002, -1.338076e-002, -3.730549e-002, 7.623499e-003, 3.103125e-002, 2.235239e-002, 7.062421e-003, -2.829067e-003, 2.241312e-002, 2.941187e-002, -3.126280e-003, -1.403232e-002, -1.889666e-002, -9.563716e-003, 2.142135e-002, 3.601694e-002, 4.209418e-002, 4.273573e-002, 2.399934e-002, 1.167806e-003, -4.096017e-003, 2.283241e-002, 6.701379e-002, 6.644729e-002, 1.722872e-002, -3.852878e-002, -4.196694e-002, -1.648093e-002, -2.477868e-002, -3.402571e-002, -2.750098e-002, -4.620002e-003, 3.202458e-002, 4.304940e-002, 2.641284e-002, -1.216110e-003, -7.376916e-003, 2.022302e-002, 6.883012e-002, 4.642050e-002, -2.634490e-003, 9.705217e-003, 2.559823e-002, -1.955036e-002, -2.206161e-002, 5.817818e-003, 4.582510e-002, 4.850519e-002, 5.576005e-003, -2.391152e-002, 7.777137e-003, 6.608555e-003, -2.217814e-002, -3.869014e-002, -2.474403e-002, 5.824943e-003, 3.424717e-002, 4.473096e-002, 4.362562e-002, 1.594654e-002, -2.340158e-002, -2.958051e-002, 6.970817e-003, 8.688309e-003, -2.397581e-002, -1.830628e-002, 2.870056e-002, -2.070276e-002, -2.817088e-002, -1.238119e-002, 2.218041e-003, 1.187313e-002, -1.614433e-002, -1.781800e-002, 4.367998e-002, 3.538815e-002, -2.135853e-002, -5.922313e-002, -5.510894e-002, -2.338664e-002, -3.700770e-003, 1.503602e-002, 2.786682e-002, 2.198362e-002, -1.957453e-003, -2.232641e-002, -1.216745e-002, -4.094560e-004, -3.380046e-003, -


© ISO/IEC 2004 — All rights reserved

Copyright International Organization for Standardization
Provided by IHS under license with ISO
No reproduction or networking permitted without license from IHS
Not for Resale

2.482366e-002, 3.050557e-002, 6.607344e-003, 3.080731e-003, 3.627634e-003, -3.405734e-002, -2.397300e-002, -2.706071e-002, -1.999241e-002, 4.620670e-003, 2.138132e-002, 1.824983e-002, -1.650161e-002, -4.260523e-002, -5.374531e-002, -4.274961e-002, -9.686681e-003, 2.880821e-002, 5.369615e-002, 4.395748e-002, 1.418701e-002, -1.729957e-002, -1.690867e-002, -2.979780e-004, -1.813374e-002, 2.610007e-003, 1.006720e-002, 4.474278e-002, 6.454135e-002, -3.033368e-003, -2.463243e-002, -5.224576e-004, -6.630888e-003, -1.257289e-002, 5.156556e-003, 4.032916e-002, 4.881866e-002, 1.993658e-002, -1.784294e-002, -3.705482e-002, -3.110269e-002, -2.993644e-003, 2.322026e-002, 2.375359e-002, 2.246377e-003, -3.252136e-002, -3.418580e-002, -5.948091e-003, -1.820644e-003, -3.737847e-002, -9.631760e-003, 3.269485e-002, 8.805234e-002, 5.164474e-002, -1.708766e-002, 4.404588e-003, 1.334955e-002, -1.102520e-002, -2.689951e-002, 6.675033e-003, 3.783130e-002, 2.518691e-002, -4.425554e-003, -1.983001e-002, -3.058433e-002, -9.824680e-003, 1.510526e-002, 1.492649e-002, -2.772138e-003, -1.619062e-002, -1.470028e-002, 1.424629e-002, 2.158390e-002, -2.631646e-002, -1.511173e-002, -6.265525e-003, 4.873062e-003, 4.378683e-002, -7.574894e-003, -1.977515e-002, 2.147979e-002, 1.390391e-002, -3.090608e-002, -3.867203e-002, -6.743601e-003, 1.627079e-002, 2.464303e-002, 2.345185e-002, 1.204917e-002, 1.456195e-002, 3.157644e-002, 3.952548e-002, 2.589702e-002, 1.289412e-002, 2.266886e-002, 4.800475e-002, 1.435091e-002, 8.986940e-003, -1.014529e-003, -3.330589e-002, -7.051492e-002, 3.207412e-003, -1.235471e-002, -3.393919e-002, 1.199999e-002, 4.035370e-002, 4.206633e-003, -3.724168e-002, -2.483057e-002, 6.150669e-003, 1.988978e-002, 1.147390e-002, -6.767647e-003, -9.331549e-004, 1.246224e-002, 1.366230e-002, 1.326776e-002, 1.229348e-002, 2.687887e-002, 3.711821e-002, 1.016112e-002, 2.453744e-002, 1.384425e-003, 1.245493e-002, -4.817663e-002, 1.997566e-002, 2.484085e-003, -3.453444e-002, -4.339403e-003, 3.696013e-002, 2.727381e-002, -1.164281e-002, -2.254198e-002, 9.630327e-003, 3.166494e-002, 2.219325e-002, -5.259632e-003, -8.782432e-003, -1.464122e-002, -2.542836e-002, -2.342074e-002, -1.482179e-002, -3.443132e-003, 1.829135e-003, -2.307659e-002, -1.173170e-002, -8.117867e-003, 7.631024e-002, 2.525824e-002, 5.916521e-002, 2.226471e-002, -3.305816e-002, -4.180782e-002, -8.285014e-003, 1.445178e-002, -4.239564e-003, -1.027874e-002, 1.634842e-002, 4.303695e-002, 3.950350e-002, 1.097296e-002, -1.358401e-002, -3.545082e-002, -6.499841e-002, -7.085443e-002, -6.637238e-002, -5.189166e-002, -5.264806e-002},
{3.049843e-002, 4.942763e-002, 1.424194e-002, -3.278137e-002, -4.464991e-002, -1.070565e-001, -1.165115e-001, -3.051164e-002, 4.094017e-002, 5.732608e-002, 3.497621e-002, -6.765267e-002, -1.159478e-001, 5.125757e-002, 1.958231e-001, 3.314825e-003, -5.364118e-002, 2.320349e-002, 1.068797e-001, 9.586753e-002, 2.901496e-002, 6.532189e-002, 5.505024e-002, -3.229362e-002, 3.104199e-003, 6.679010e-003, 1.355139e-002, 4.510230e-003, 2.963756e-003, -7.848952e-002, -1.567226e-001, -1.172967e-001, -3.746618e-002, 2.206859e-003, -5.959125e-003, -8.180177e-002, -1.499161e-001, -8.573796e-003, 9.359160e-002, -2.646872e-002, -3.592306e-002, 2.986111e-002, 7.346228e-002, -5.374103e-003, -5.593275e-002, 1.558220e-002, 3.191668e-002, 2.895669e-003, -1.668261e-002, -1.704915e-002, -9.302160e-003, 4.880403e-002, 6.861047e-002, 1.004117e-002, -6.508522e-002, -2.135756e-002, 4.244252e-002, 7.794386e-002, 6.156453e-002, -3.412092e-002, -1.228836e-001, -4.548906e-002, -6.429711e-003, -1.318418e-002, -6.873180e-003, 5.395511e-002, 4.966958e-002, -7.130864e-002, -1.140563e-001, -2.719876e-002, 2.968541e-002, 3.050743e-002, -1.762843e-002, -2.879909e-003, -3.341124e-002, 1.616875e-002, 9.220571e-002, 7.363162e-002, 1.700696e-002, 6.652087e-002, 1.184788e-001, 1.325064e-001, 9.626289e-002, -1.569384e-002, -8.548208e-002, -5.471548e-002, -1.183125e-002, -5.039083e-003, -1.006618e-002, 5.057751e-002, 5.051566e-002, -4.604522e-002, -1.269695e-001, -7.672929e-002, -1.521370e-003, 3.408989e-002, -1.858746e-002, -8.787574e-004, -2.371210e-002, -5.189911e-002, 4.643597e-004, 2.914844e-002, 7.713229e-003, 5.707219e-002, 1.035674e-001, 1.045344e-001, 6.757745e-002, 2.374852e-003, -2.775134e-002, -2.309079e-002, 1.414816e-002, -2.873777e-002, -5.575097e-002, -2.099329e-002, 1.945843e-002, -8.929960e-003, -2.428965e-002, -5.076759e-002, -5.376982e-002, -3.224931e-002, -1.414342e-002, 1.293164e-002, 1.453570e-003, -4.176859e-002, -5.109915e-002, -6.451422e-002, -9.427476e-002, -6.460836e-002, -1.290672e-002, 3.752253e-002, 7.672186e-002, 6.854747e-002, 3.016714e-002, 3.818864e-002, 3.648799e-002, -3.161149e-002, -6.892527e-002, -9.314546e-002, -5.980694e-002, -1.120079e-002, 2.615874e-002, 4.939044e-002, 4.362672e-003, -2.765862e-002, -3.993045e-003, 2.055537e-002, 2.317463e-002, -1.428711e-002, -2.031141e-002, -1.892641e-002, -4.688060e-002, -3.300219e-002, 1.476952e-002, 4.951779e-002, 3.656452e-002, 1.770930e-002, 5.388732e-002, 5.208646e-002, 3.590905e-002, -9.854519e-003, -6.892853e-003, -7.575272e-002, -6.479507e-002, 2.260553e-002, 2.628834e-002, 5.209364e-002, 3.156588e-002, 1.153809e-003, -3.271173e-003, 1.458070e-002, 2.168852e-002, -4.408403e-003, -1.241583e-002, 1.100938e-002, 1.316441e-002, 7.275718e-003, 1.639017e-002, -2.370698e-002, -9.194925e-002, -9.959622e-002, -4.383538e-002, -1.106629e-002, 2.453045e-002, 8.107158e-003, 3.369532e-002, -1.714098e-002, -2.378698e-002, 4.530476e-002, 7.557014e-003, -2.515505e-002, -1.313117e-002, -1.263492e-003, 4.234232e-003, 5.247662e-004, 1.245007e-002, -6.146199e-003, -1.532273e-002, 9.393612e-003, 3.866161e-002, 2.527296e-002, -1.907109e-003, -7.721615e-002, -1.295890e-001, -9.139733e-002, -3.519141e-002, 1.985152e-002, 1.682737e-002, -8.062206e-004, 4.972323e-002, 4.556175e-002, -1.231202e-002, 2.976700e-003, -1.729853e-002, -6.606973e-002, -3.745932e-002, -5.526614e-003,

© ISO/IEC 2004 — All rights reserved


Copyright International Organization for Standardization
Provided by IHS under license with ISO
No reproduction or networking permitted without license from IHS
Not for Resale

1.022530e-003, -3.738959e-003, -7.118916e-003, -1.583176e-002, -2.186617e-002, -1.210195e-003, 5.960608e-002, 5.672798e-002, 8.225134e-003, -5.180138e-002, -2.693919e-002, 5.375766e-002, 7.402465e-002, 1.028304e-002, -1.870271e-002, 3.512106e-003, 7.822539e-002, 6.890541e-002, 1.473817e-002, 5.589584e-002, 4.710141e-002, -2.942866e-002, -1.228795e-002, 1.807797e-002, -1.235901e-002, -1.987036e-002, -1.154162e-002, -1.655048e-002, -1.332498e-002, -1.445041e-002, 5.022181e-002, 6.754041e-002, 1.324202e-002, 4.053887e-003, 5.253821e-002, 9.822737e-002, 6.860846e-002, 2.477271e-003, -4.271478e-002, -3.666018e-002, 1.550286e-002, 2.663773e-002, 3.325101e-002, 9.147916e-002, 9.580977e-002, 3.327184e-002, 3.070712e-002, 4.815665e-002, -9.037648e-004, -1.629146e-002, -4.633014e-003, -1.339116e-002, 1.203007e-002, -1.275304e-002, 2.229398e-002, 4.718227e-002, -3.298028e-003, -1.250458e-002, 3.349096e-002, 6.404008e-002, 5.847137e-002, 2.920669e-002, -2.720744e-002, -7.775332e-002, -4.319202e-002, -6.242420e-003, 7.659960e-004, 2.539735e-002, 4.915436e-002, 3.257165e-002, 1.594897e-002, 3.574704e-002, 3.612765e-002, -7.560130e-003, 1.089377e-002, -6.076802e-003, 2.553598e-002, -5.331090e-003, -2.839771e-002, -1.464925e-002, -6.077853e-002, -7.889664e-002, -1.126217e-002, 3.878885e-002, 4.336216e-002, 1.400964e-002, -2.556717e-002, -7.501848e-002, -7.105474e-002, -3.264198e-002, -1.342182e-002, 6.478704e-003, 9.035879e-004, -2.138429e-002, -4.504496e-002, -3.427712e-002, 3.325628e-002, -1.962710e-002, 8.875270e-003, 1.623682e-003, 3.283504e-002, 9.103172e-003, -5.924369e-002, -6.511209e-002, -7.293905e-002, -6.874322e-002, -1.455034e-002, -7.049087e-004, -1.607588e-002, -1.779097e-002, -2.473632e-003, 4.914736e-003, 5.603172e-003, 3.086790e-002, 2.406420e-002, 2.853645e-002, 1.938014e-002, 4.166899e-003, -2.286375e-002, -4.788358e-002, 2.121464e-002, -2.406603e-002, -2.297365e-002, 7.336790e-003, 3.410515e-002, 2.596787e-002, -6.023626e-002, -6.095270e-002, 2.300897e-003, 4.395237e-002, 3.673776e-002, -1.425568e-002, -2.919490e-002, 5.663954e-003, 2.417810e-002, 9.179701e-003, 7.417697e-003, 1.227288e-002, -1.637238e-002, -4.517767e-002, -3.145277e-002, 1.998773e-002, 5.024641e-002, 1.780757e-002, 1.723256e-002, -1.252739e-003, -2.460357e-002, 3.535517e-003, 2.318441e-002, 2.925206e-002, -4.673031e-002, -3.659221e-002, 5.137112e-002, 5.381081e-002, -1.593158e-002, -5.760752e-002, -2.853258e-002, 1.393791e-002, 3.896972e-002, 3.146682e-002, 1.398645e-002, 1.194272e-002, 2.031152e-002, 1.826930e-002, -6.933784e-004, -2.317405e-002, -3.795927e-002, -5.855905e-003, 8.371030e-003, 3.086870e-002, -1.510328e-002, -8.027395e-003, -1.230123e-002, 1.206565e-002, -1.465494e-002, -1.086600e-002, 5.118974e-002, 3.589910e-002, -9.118940e-003, -4.245838e-003, 2.441641e-002, 4.365603e-002, 2.839658e-002, -2.109299e-005, -1.001740e-002, -5.783259e-003, 8.250895e-003, 2.164117e-002, 8.310218e-003, -2.283555e-002, -3.973718e-002, 5.842306e-004, -8.223705e-003, 3.434458e-002, -4.689700e-003, -1.949878e-003, -4.096290e-002, -1.375672e-002, 9.009606e-003, -1.035502e-003, 4.854266e-003, -1.208693e-002, -2.323048e-002, -8.300400e-003, 2.054613e-002, 4.800534e-002, 3.811199e-002, 1.145496e-002, -3.259186e-004, 3.372837e-003, -5.583768e-003, -7.039046e-003, -1.730846e-002, -3.140873e-002, -1.200603e-002, 2.421585e-002, -1.147385e-002, 5.906720e-003, 1.663373e-002, 2.721361e-002, 6.379037e-003, -3.314251e-002, 4.435550e-003, 1.115090e-002, -2.238192e-002, -2.894254e-002, -2.201324e-002, -7.536777e-004, 2.539840e-002, 4.080804e-002, 2.930381e-002, -5.512590e-003, -3.218383e-002, -3.815420e-002, -3.365553e-002, -2.608796e-002, -1.351247e-002, -1.552187e-003, 3.937706e-003, 1.637100e-002, -2.190569e-002, -2.807585e-002, 1.653771e-002, 1.546201e-002, 6.318279e-002, -7.843295e-003, -8.962026e-003, 2.268856e-002, -1.788683e-003, -7.349922e-003, 1.982042e-002, 3.830118e-002, 3.909594e-002, 1.804681e-002, -2.839421e-002, -7.069167e-002, -9.618405e-002, -7.904466e-002, -3.944044e-002, 3.847685e-003, 2.629723e-002, 3.409097e-002, 1.640531e-002, -7.137640e-004, -2.761532e-002, -4.242875e-002, -1.378411e-002, -4.848453e-002, 3.506114e-002, 1.129415e-002, -2.790536e-002, 9.466820e-003, 2.148931e-002, 1.783644e-002, 4.129067e-002, 5.953824e-002, 5.078639e-002, 1.951430e-002, -2.803598e-002, -5.683448e-002, -6.207848e-002, -3.105108e-002, 1.684555e-002, 5.060186e-002, 5.705933e-002, 3.804596e-002, 7.695172e-003, -2.936025e-002, -8.150624e-003, -1.115411e-002, -1.503423e-002, -6.267097e-002, 1.222639e-002, 7.990700e-003, -2.287389e-002, -1.573966e-003, 1.989963e-002, 2.969574e-002, 2.722458e-002, 3.210910e-002, 3.407577e-002, -1.767632e-003, -4.791014e-002, -7.236516e-002, -7.621511e-002, -3.945710e-002, 4.553906e-003, 3.069290e-002, 2.818694e-002, 1.542096e-002, -4.362200e-003, -3.718988e-002, 3.965910e-002, 3.329301e-002, -1.875217e-002, 4.627796e-003, 2.224644e-002, -3.293719e-002, -2.345288e-002, 1.722176e-002, 2.803957e-002, 2.371929e-002, 8.231398e-003, -4.809730e-004, 2.061917e-002, 1.255179e-002, -2.850351e-002, -6.117814e-002, -7.419818e-002, -4.698591e-002, -1.506903e-002, -7.892621e-003, -6.202381e-003, 1.329602e-002, 1.283016e-002, -2.247667e-002, 3.085664e-002, -4.264656e-003, -1.615183e-002, 4.786920e-002, 2.805518e-002, -4.271920e-002, -3.083055e-002, 2.131243e-002, 3.188104e-002, 2.156820e-002, -2.009572e-003, -4.450316e-003, 2.200593e-002, 3.994822e-002, 1.952291e-002, -5.370061e-003, -1.647047e-002, -7.172693e-003, 2.258763e-003, -2.310056e-003, 9.606754e-003, 2.754318e-002, 1.431750e-002, -1.715114e-002},
{-7.455476e-002, -2.920028e-002, -2.907422e-002, -7.082990e-002, -1.099801e-002, 7.984919e-003, -3.033403e-002, -3.543953e-002, -2.973924e-002, -4.630112e-002, -7.864574e-002, -7.658639e-002, -7.355319e-002, 6.550760e-002, 1.647946e-001, 8.456423e-002, -1.464230e-002, -1.916576e-002, 8.615721e-002, 4.656501e-002, 1.254375e-002, -1.796686e-002, -5.537471e-002, -5.689275e-002, -


© ISO/IEC 2004 — All rights reserved

Copyright International Organization for Standardization
Provided by IHS under license with ISO
No reproduction or networking permitted without license from IHS
Not for Resale

4.879068e-002, -2.640193e-002, -6.361504e-003, -6.697107e-002, -2.015926e-002, 1.646148e-004, -2.520716e-002, -5.275905e-003, 4.166858e-002, 6.982570e-002, 6.986466e-002, 9.710892e-003, -5.350536e-002, 3.936057e-002, 8.202447e-002, 4.655493e-002, -2.584846e-003, -1.087519e-002, 4.597108e-002, 7.523046e-003, 2.184855e-002, 7.643294e-002, 8.869232e-002, 8.214289e-002, -2.325981e-003, -6.577259e-003, 1.301674e-002, -1.537740e-002, -1.555489e-002, -1.838536e-002, -4.209111e-002, -7.333509e-003, 4.553949e-002, 7.007537e-002, 5.203261e-002, -1.208479e-002, -6.109984e-002, -4.224138e-002, -8.223114e-004, 1.806756e-002, 2.903712e-003, -8.772664e-003, -1.169479e-002, -4.578434e-002, -8.492942e-002, 1.743589e-002, 8.213003e-002, 1.013929e-001, 2.172472e-002, -3.775639e-003, 2.330048e-002, 2.258003e-002, 1.807446e-002, -3.188823e-002, -1.079802e-001, -8.452420e-002, -3.959938e-002, -1.730209e-002, -8.596128e-003, -3.279129e-002, -5.984014e-002, -6.474890e-002, -1.824319e-002, 1.147715e-002, 7.836616e-003, 1.312587e-002, -1.711756e-002, -1.918693e-002, -1.049857e-001, -1.133288e-001, -4.148423e-002, 1.051526e-003, 2.500817e-002, 5.442241e-004, 2.549949e-002, 2.568478e-002, 7.779535e-002, 2.306966e-002, -8.138916e-002, -8.883159e-002, -5.678008e-002, -8.504889e-003, 3.699261e-002, 3.659409e-002, -1.359059e-002, -2.316741e-002, 1.182198e-002, 3.462363e-002, 2.457885e-002, 3.209876e-002, 1.003901e-002, -1.730659e-002, 3.404486e-002, -4.571209e-002, -9.282832e-002, -8.579696e-002, 1.963328e-002, 8.230146e-003, 1.651404e-002, 1.116456e-002, 7.203085e-002, 8.111217e-002, 3.281401e-002, 4.321488e-002, 7.666197e-002, 1.075488e-001, 1.069976e-001, 7.342264e-002, 1.187667e-003, 1.171209e-002, 3.700703e-002, 3.903825e-002, 2.306445e-002, 2.009391e-002, -1.675853e-003, -3.784534e-002, 5.148505e-002, 1.280430e-001, 7.910720e-002, 2.436755e-002, 3.543637e-003, 1.664374e-002, -1.066463e-003, -3.056773e-002, -6.758124e-003, 6.378051e-003, -2.277195e-002, -1.186620e-002, -1.258766e-003, 7.821281e-003, 3.220836e-002, 2.680450e-002, -2.821267e-002, 1.184061e-003, 1.092984e-002, -1.114699e-002, -2.659869e-002, -2.763734e-002, -6.884024e-002, -4.843126e-002, 4.418297e-003, 6.462070e-002, 6.710449e-002, 3.665539e-002, -2.320841e-002, 1.942041e-002, 1.897691e-003, -4.776281e-002, -6.265294e-002, -7.590126e-002, -1.195420e-001, -1.351250e-001, -1.203744e-001, -5.866641e-002, 2.455268e-002, -6.337240e-003, -9.080771e-003, 9.088171e-002, 2.847714e-002, -2.669948e-002, -4.710269e-002, -1.044566e-002, 2.404313e-002, 6.817814e-002, 1.005387e-001, 3.278411e-002, -5.412378e-002, -8.210934e-002, -3.154412e-002, 1.451450e-002, 1.379910e-002, -1.239317e-002, -3.160595e-002, -4.850300e-002, -8.797014e-002, -1.027242e-001, -6.107961e-002, 3.338732e-002, 7.604529e-002, 1.840322e-002, 1.793888e-002, -1.439653e-003, -7.522686e-002, -3.435357e-002, -1.443226e-002, 1.208327e-002, -1.289057e-002, 2.060503e-002, 1.217599e-001, 4.935475e-002, -7.238185e-002, -1.055310e-001, -9.208555e-003, 2.986062e-002, 1.523468e-002, 2.899143e-002, 2.434685e-002, 2.038694e-002, 8.418863e-003, 3.410784e-003, 3.774380e-002, 7.471796e-002, 6.822494e-002, 4.930855e-002, 4.290034e-002, -1.763590e-002, -4.646826e-002, -1.084221e-002, -5.979954e-003, 2.722390e-002, 3.438942e-003, -4.487191e-003, 5.324131e-002, 1.008713e-002, -7.338949e-002, -9.593451e-002, -7.505547e-003, 4.683913e-002, 1.430008e-002, 3.858748e-002, 5.580934e-002, 6.259878e-002, 7.446053e-002, 6.510000e-002, 5.326334e-002, 3.708495e-002, 2.480082e-002, 3.892013e-002, 3.887874e-002, 1.623735e-002, -2.040096e-002, -1.456811e-002, -8.659170e-004, 5.701191e-002, 3.476718e-002, -4.087156e-002, -5.197871e-002, -6.061526e-002, -8.815128e-002, -1.076121e-001, -1.312789e-002, 4.122516e-002, -7.561941e-003, 1.388708e-002, 6.400891e-002, 8.018371e-002, 9.369343e-002, 6.322956e-002, 1.462320e-002, -3.574794e-003, 1.823875e-003, -2.369760e-003, -4.885542e-004, 1.413072e-002, 3.354233e-002, 4.316512e-002, 2.524378e-002, 3.005457e-002, 1.488909e-002, -3.450234e-002, -6.560715e-002, -7.546012e-002, -8.542461e-002, -1.102475e-001, -1.735642e-003, 2.105191e-002, -2.446070e-002, -2.791488e-002, 4.122884e-002, 6.499977e-002, 6.065873e-002, 8.728970e-003, -3.575194e-002, -1.529872e-002, 6.809322e-003, -6.966725e-003, -7.069435e-003, 2.200386e-002, 4.167397e-002, 3.203177e-002, 5.687845e-003, -4.579589e-003, -6.573749e-003, 2.863175e-003, 5.435534e-003, 8.034480e-003, -1.428921e-002, -6.223426e-002, 2.052709e-002, 1.129253e-002, -1.325817e-002, -4.575972e-002, 6.458961e-003, 2.956331e-002, 1.876123e-006, -4.921220e-002, -6.756625e-002, -3.986810e-002, -1.399341e-002, 4.247023e-003, 2.982784e-002, 4.042034e-002, 2.117339e-002, -1.974446e-002, -3.549831e-002, -1.150515e-002, 6.519361e-003, 8.562565e-003, 1.941904e-002, 5.121916e-002, 4.142714e-002, -6.061932e-003, 4.129858e-002, -1.528411e-002, -4.071276e-003, -3.172913e-002, -1.327376e-002, -1.173898e-004, -3.992803e-002, -5.591524e-002, -2.918925e-002, -1.882000e-002, -1.431856e-002, 5.643867e-002, 9.489602e-002, 6.405066e-002, 5.560566e-003, -3.677082e-002, -2.994744e-002, 1.154144e-002, 4.838584e-002, 5.345432e-002, 2.262286e-002, -2.177823e-002, -5.625400e-002, -4.658516e-002, 4.258652e-002, -4.557081e-002, 1.067339e-002, -2.615162e-003, -2.030818e-002, -2.096923e-002, -5.141371e-002, -3.260158e-002, 1.361352e-002, -2.517797e-002, -5.063057e-002, -2.469835e-002, 5.161714e-003, 3.944780e-003, -2.857222e-002, -5.090923e-002, -4.432920e-002, -1.718540e-003, 3.365166e-002, 6.566394e-002, 6.987584e-002, 2.731951e-002, -1.618736e-002, -1.271192e-002, 2.749482e-002, -4.044386e-002, 5.667489e-003, 1.799776e-002, -1.754163e-002, -1.553348e-002, -4.961084e-002, -2.212206e-002, 7.216575e-003, -2.873068e-002, -3.660670e-002, -1.874740e-003, 1.241199e-002, -5.455953e-003, -3.776531e-002, -4.870756e-002, -2.548060e-002, 2.054181e-002, 4.214841e-002, 5.005277e-002, 2.463339e-002, -7.856370e-003, 1.574170e-002, 5.144920e-002,

© ISO/IEC 2004 — All rights reserved


Copyright International Organization for Standardization
Provided by IHS under license with ISO
No reproduction or networking permitted without license from IHS
Not for Resale

3.383772e-003, 8.525095e-003, -3.721234e-003, 1.894489e-002, -7.175769e-003, 8.837200e-003, -1.779932e-002, 3.002478e-003, 3.666914e-002, 3.806051e-002, 3.719507e-002, 2.549851e-002, -3.401024e-003, -3.982906e-002, -6.230009e-002, -5.820764e-002, -2.714848e-002, 7.862039e-003, 2.244793e-002, 1.637081e-002, -1.079888e-002, -2.152400e-002, 1.730964e-002, 5.364434e-002, -2.504611e-002, 2.236654e-002, 7.778146e-003, -1.033284e-002, 1.245132e-002, 2.424392e-002, 1.774183e-002, 1.533019e-002, 3.314365e-002, 1.524051e-002, -1.376362e-002, -2.090332e-002, -2.886462e-002, -4.324345e-002, -4.660301e-002, -3.670686e-002, -3.107668e-002, -1.946498e-002, -3.853565e-003, -3.988944e-003, -1.152652e-002, -1.909296e-003, 2.839468e-002, 2.510733e-002, -3.011282e-002, 3.536638e-003, 2.798050e-002, -5.789989e-002, 1.115516e-002, 3.529931e-002, 2.188115e-002, 6.229474e-003, -5.975752e-004, -2.009988e-002, -3.887014e-002, -4.273972e-002, -3.261046e-002, -1.954278e-002, -1.647130e-002, -5.987324e-003, -9.608219e-003, -3.141540e-003, 1.136432e-002, 1.197064e-002, 1.323866e-003, 1.382174e-002, 2.630152e-002, -9.953848e-003, -5.147977e-003, -2.805913e-002, 5.533109e-003, -6.673268e-002, -1.623030e-002, 2.887978e-002, 4.066375e-005, -2.358068e-002, -3.586703e-002, -3.313947e-002, -3.063193e-002, -3.283557e-002, -1.071869e-002, 1.026611e-002, 1.904004e-002, 2.412200e-002, 2.132566e-002, 2.633590e-002, 2.952351e-002, 1.673355e-002, 8.163058e-003, 2.093838e-002, 5.607728e-004, -5.270053e-002, 2.353487e-002, -3.041877e-002, -4.073117e-004, -2.669346e-002, -1.268622e-002, 2.602709e-003, -8.718624e-003, -4.313138e-002, -5.573307e-002, -3.032678e-002, -8.365573e-003, -1.028640e-002, 3.665591e-003, 1.992224e-002, 3.063165e-002, 3.323066e-002, 3.164403e-002, 2.692825e-002, 1.693522e-002, 4.193652e-003, -6.761224e-003, 3.831492e-004, -3.019884e-002, -5.322521e-002, 6.470719e-002, -4.808433e-003, -1.649614e-002, 1.320263e-002, 2.311842e-002, -1.899768e-002, -6.391210e-003, -2.022290e-002, -3.333084e-002, -7.245162e-003, 2.534317e-002, 2.349609e-002, 1.874932e-002, 2.062765e-002, 1.500647e-002, 1.703005e-002, 2.600261e-002, 2.340782e-002, 1.182552e-002, -6.107420e-003, -1.671615e-002, -1.123987e-002, -2.277408e-002, -3.437876e-003, 6.503624e-002, -3.087705e-002, -2.991682e-002, 3.567871e-002, 6.213455e-002, -8.432151e-003, 3.172380e-004, 1.431728e-002, 1.838774e-003, 2.163133e-002, 4.527981e-002, 4.388766e-002, 1.772095e-002, -3.013087e-003, -1.532018e-002, -3.693317e-003, 6.821320e-003, 3.775033e-003, -6.490212e-003, -2.192634e-002, -2.606966e-002, -2.403436e-003, 1.561529e-002, 6.680866e-002},
{5.911677e-002, 6.362371e-003, 6.795331e-002, 5.448173e-002, 6.829480e-002, 7.063149e-002, 6.495773e-002, 3.639959e-002, 4.308215e-002, 6.360120e-002, 6.149738e-002, 8.897528e-002, 2.357310e-002, -1.339929e-001, -2.546018e-002, 2.407975e-002, -4.879271e-002, -7.419212e-002, -9.063806e-002, -1.605108e-001, -4.084190e-002, 1.195737e-002, -2.581782e-002, -1.393031e-002, 1.615857e-002, -3.723552e-002, 4.231896e-002, 7.713722e-002, 6.192828e-002, -6.623763e-003, -8.649330e-002, -1.132669e-001, -1.000894e-001, -5.996195e-002, 2.393374e-003, 6.528720e-002, 1.185007e-002, -8.491557e-002, 6.547429e-002, 6.429460e-002, -7.089520e-003, -2.797327e-002, 3.935706e-003, -1.072696e-001, -7.066113e-004, 5.992445e-002, 2.460908e-002, -2.126221e-002, -4.386657e-003, -5.060454e-002, 1.056981e-002, 8.207524e-002, 5.690444e-002, -2.080143e-002, -1.112398e-001, -1.350074e-001, -1.066997e-001, -4.299119e-002, 3.483312e-002, 8.394174e-002, -1.159007e-002, -2.447913e-002, 1.042234e-001, 7.202730e-002, 2.012137e-002, 2.992592e-002, 6.242837e-002, -1.479537e-002, 2.627514e-002, 1.165410e-001, 1.321572e-001, 8.541200e-002, -9.695927e-003, -3.589978e-002, -1.600414e-002, 5.175821e-002, 5.279945e-002, -1.645907e-002, -8.886085e-002, -8.844875e-002, -4.612872e-002, 1.651469e-002, 6.107516e-002, 3.326379e-002, -6.509232e-002, 2.038070e-004, 7.354450e-002, 3.414598e-002, 4.066410e-003, 4.469180e-002, 7.316175e-002, 4.284104e-002, 4.692862e-004, 9.277989e-002, 1.444487e-001, 1.295620e-001, -1.385722e-002, -1.382446e-002, -2.906093e-002, -2.652957e-003, 2.527830e-002, -2.371676e-002, -9.106250e-002, -7.117976e-002, -2.453823e-002, 1.110695e-002, 4.784244e-003, -6.650389e-002, -8.875979e-002, -6.749994e-003, 2.309685e-003, -4.173347e-002, -2.987621e-002, 7.386516e-004, 3.047599e-002, 6.849865e-002, 1.115973e-002, 8.500892e-003, 6.951132e-002, 9.899779e-002, -4.485146e-003, 1.125766e-002, -1.400777e-002, -4.909873e-002, -1.914401e-002, -3.433541e-002, -7.034760e-002, -6.577741e-002, -4.535588e-002, -1.653958e-002, -3.363850e-003, -3.339532e-002, -4.063737e-002, 1.603730e-002, -4.231828e-002, -8.696932e-002, -3.968803e-002, -1.430910e-002, -2.052732e-002, 9.487038e-003, 9.972720e-002, 3.709433e-002, -1.573724e-002, -1.533230e-002, 5.593758e-003, 3.043164e-002, 6.354469e-003, -5.495648e-002, -3.455141e-002, -2.960438e-002, -5.532102e-002, -5.753269e-002, -1.615959e-002, 5.052223e-002, 8.352202e-002, 2.373757e-002, 7.164888e-003, 6.093056e-002, -5.848953e-002, -8.610133e-002, -2.449055e-003, 3.749502e-002, 3.542779e-002, -4.305819e-002, 7.846688e-002, 1.081019e-001, 6.638409e-003, -3.817353e-002, -1.737690e-002, 2.283229e-002, 1.989910e-002, -5.190625e-002, -4.353203e-002, -1.759235e-002, -1.787875e-002, 1.085224e-003, 5.673499e-002, 9.823206e-002, 6.016603e-002, -2.297768e-002, -1.647383e-002, -4.147556e-002, -5.862534e-002, 3.243338e-003, 1.346286e-003, -5.865721e-002, 4.914530e-003, -5.841676e-002, -3.653629e-002, 8.226933e-002, 3.218760e-002, -2.779811e-002, -1.671063e-002, 8.900787e-005, 2.764685e-002, -3.954643e-002, -5.621104e-002, -3.941890e-002, -3.019852e-002, -2.454321e-003, 4.053005e-002, 3.355956e-002, -4.112747e-002, -7.737154e-002, -2.090015e-002, 4.142730e-002, 9.141622e-002, 7.599380e-002, 1.357904e-002, -8.200438e-002, -1.074732e-002, 9.009844e-003, -4.001103e-002, 1.828509e-002, 1.029583e-002, -4.381698e-002,


© ISO/IEC 2004 — All rights reserved

Copyright International Organization for Standardization
Provided by IHS under license with ISO
No reproduction or networking permitted without license from IHS
Not for Resale

1.630220e-002, -2.777569e-002, 1.109508e-002, -2.168530e-002, -4.221907e-002, -3.483241e-002, -2.485978e-002, 1.516319e-003, 1.044538e-002, -2.285204e-002, -5.881136e-002, -3.955946e-002, 2.943403e-003, 4.296640e-002, 2.888652e-002, -7.859190e-003, 2.563555e-003, 7.792969e-003, -1.295989e-002, -4.262102e-002, -6.620545e-002, -2.796267e-002, -8.885979e-003, -4.785524e-002, 5.887098e-002, -4.592871e-002, -3.745087e-003, -1.638212e-003, -1.910985e-002, -1.113587e-002, -4.672671e-003, 1.367005e-002, -1.053476e-002, -2.210624e-002, 7.101553e-004, 2.235112e-002, 3.293044e-002, 3.089353e-002, 3.368390e-002, 1.667358e-002, 7.503190e-004, 2.771936e-002, 2.657339e-002, -2.952655e-002, -7.288961e-002, -4.362353e-002, -1.248226e-002, -4.111185e-002, 1.028402e-001, -4.154587e-002, -1.246051e-002, 1.263784e-002, 1.314355e-002, 2.628363e-002, 2.455976e-002, 2.480609e-002, 1.175671e-002, 2.250576e-002, 2.602965e-002, 5.945234e-003, -1.677957e-003, 2.407637e-002, 4.649699e-002, 3.898677e-002, -2.586470e-004, 6.831118e-003, 6.088665e-003, -3.040544e-002, -4.693757e-002, -1.924510e-002, -1.917845e-002, -4.602813e-002, 6.524872e-002, -3.233952e-002, -6.128974e-003, 1.142875e-002, 3.246185e-002, 5.105235e-002, 3.475060e-002, 2.387945e-002, 2.774948e-002, 2.343321e-002, -4.296819e-003, -2.859135e-002, -1.169948e-002, 2.763135e-002, 2.627850e-002, -5.173839e-003, -4.074124e-002, -2.790277e-002, -2.325342e-002, -3.450423e-002, -2.609231e-002, -1.255690e-003, -3.824714e-003, -3.489337e-002, 9.632175e-003, -2.633498e-002, 1.708970e-002, 8.897971e-003, 2.935712e-002, 5.718306e-002, 3.631471e-002, 6.294701e-003, 4.049808e-003, -1.654664e-003, 6.451523e-003, 5.456502e-002, 8.537802e-002, 6.991688e-002, 2.355399e-002, -4.228915e-002, -6.434498e-002, -4.109771e-002, -1.572595e-002, 9.314849e-003, 2.348583e-002, 3.404976e-002, 1.604187e-002, -3.545794e-002, 4.921589e-003, -1.528547e-002, 4.007728e-002, 2.088817e-002, 2.517188e-003, 4.272915e-002, 3.365044e-002, -9.889694e-003, -3.255827e-002, -2.735146e-002, 1.007683e-002, 6.953576e-002, 7.942177e-002, 4.856089e-002, 2.507317e-002, -3.876040e-002, -5.447655e-002, -4.247302e-002, 9.221176e-004, 3.026171e-002, 1.280581e-002, -2.513653e-002, -5.551254e-002, -5.848288e-002, 2.201485e-002, -1.287265e-002, 6.964254e-002, 2.647840e-002, -2.784189e-002, 4.232237e-003, 2.849941e-002, 1.427798e-002, 1.501250e-002, 3.665682e-003, -2.230168e-002, -1.047491e-003, 3.913118e-002, 6.066022e-002, 2.963323e-002, -1.948152e-002, -4.379922e-002, -3.925460e-002, -1.351052e-002, 5.122352e-003, 7.455614e-003, -9.373520e-003, -2.051557e-002, -8.600975e-003, 4.573013e-002, 3.394945e-003, 6.573509e-002, 1.480681e-002, -4.770070e-002, -2.562384e-002, 1.674135e-002, 3.416971e-002, 4.476782e-002, 2.619380e-002, -1.364093e-002, -1.644689e-002, 3.442792e-002, 7.273531e-002, 5.284898e-002, 1.391428e-002, -1.972960e-002, -2.988203e-002, -4.433346e-002, -4.407363e-002, -3.467053e-002, -1.999022e-002, 7.810544e-003, 3.406942e-002, 3.353853e-002, 1.027968e-002, 2.839561e-002, -1.824427e-002, -4.578176e-002, -2.963250e-002, -4.434529e-003, 9.438029e-003, 1.028125e-002, 1.125808e-002, -2.334300e-002, -3.883306e-002, -1.619567e-002, 2.357859e-002, 3.807454e-002, 2.671384e-002, 1.242134e-002, 8.276201e-003, 7.223701e-004, -1.496102e-002, -3.502393e-002, -2.753191e-002, -1.257319e-003, 2.787146e-002, -1.786702e-002, -6.055752e-003, -1.596113e-002, -5.532338e-002, -1.805601e-002, 6.131207e-003, -6.354054e-003, -2.642807e-002, -2.177179e-002, 4.249995e-004, -7.228363e-004, -2.295807e-002, -3.002003e-002, -1.284104e-002, 1.359190e-003, 4.193086e-003, 9.032671e-003, 1.442321e-002, 2.174367e-002, 1.440188e-002, -9.647358e-003, -1.426598e-002, -3.899189e-003, 2.097547e-002, -3.806320e-002, -4.646597e-002, -4.417844e-002, -6.022097e-002, 1.370145e-003, 4.908516e-002, -3.049494e-004, -2.870327e-002, -2.740290e-002, -1.692137e-002, -1.535764e-002, -1.393007e-002, -1.673591e-002, -1.116212e-002, -1.425410e-003, 1.833623e-002, 3.287241e-002, 3.700385e-002, 2.496721e-002, -1.264875e-005, -2.746877e-002, -3.755114e-002, -2.724304e-002, 8.496569e-003, -1.969857e-002, -4.203771e-002, -2.284837e-002, -1.322414e-002, 4.972640e-003, 3.975752e-002, 9.311125e-003, -1.332649e-002, -9.366022e-004, -8.688716e-005, -7.208823e-003, -5.620656e-003, -9.028913e-003, -9.274667e-003, 4.529326e-003, 1.991022e-002, 2.939257e-002, 3.358858e-002, 2.140417e-002, -3.358928e-004, -2.349195e-002, -4.307735e-002, -2.867419e-002, 7.226563e-003, 1.786903e-002, -5.777236e-003, 6.634064e-003, 2.999176e-002, -2.173804e-003, -1.652050e-003, 1.597388e-003, -5.423075e-003, 1.474441e-002, 2.572196e-002, 1.557299e-002, 5.622765e-003, -2.815510e-004, -7.549031e-003, -9.069475e-003, -1.437846e-002, -2.034179e-002, -5.722563e-003, 2.596320e-002, 3.445180e-002, 1.383457e-002, -1.429183e-002, -1.885602e-002, -1.210743e-002, -1.804274e-003, -6.184376e-003, 8.518859e-003, -9.222119e-003, -1.749091e-002, -1.914555e-002, -1.344230e-002, -2.215606e-002, -2.673942e-002, -2.564195e-003, 2.092188e-002, 2.115361e-002, 1.587639e-002, -7.547586e-004, -3.026836e-002, -5.809868e-002, -6.369846e-002, -1.966819e-002, 5.402797e-002, 8.253693e-002, 5.595244e-002, 8.530822e-003, -2.008247e-002, -2.286995e-002, -1.985225e-002, 3.258270e-003, 3.423572e-003, -1.647933e-002, 6.382535e-003, 1.291284e-002, 3.477998e-003, -1.779761e-002, -5.687610e-002, -5.490040e-002, -1.309878e-002, 2.487642e-002, 4.491994e-002, 3.117247e-002, -1.098920e-002, -4.000445e-002, -3.115541e-002, 1.745083e-002, 8.332783e-002, 1.045520e-001, 6.619914e-002, 7.456040e-003, -1.754093e-002, -2.534129e-002},
{3.219615e-002, 1.998227e-003, 1.184775e-002, 6.072103e-002, 2.871450e-002, 5.915145e-003, -2.945562e-002, -7.602601e-002, -9.305563e-002, 2.917695e-003, 1.278596e-001, 1.204573e-001, 2.387123e-002, -6.836687e-002, -8.775866e-002, -1.502764e-002, 3.819879e-002, -3.044195e-002, -2.115065e-001, -6.571062e-002, 1.303354e-001, 1.316180e-001, 2.654319e-002, -1.211601e-001, -

© ISO/IEC 2004 — All rights reserved


Copyright International Organization for Standardization
Provided by IHS under license with ISO
No reproduction or networking permitted without license from IHS
Not for Resale

5.731153e-003, -1.448442e-002, -1.727477e-002, 1.418463e-002, 1.144582e-002, 2.807482e-002, 1.256630e-002, -3.867342e-002, -4.416976e-002, 6.377238e-003, 4.212918e-002, -5.914063e-003, -6.121955e-002, -7.893144e-002, -1.077037e-001, -2.707022e-002, 1.251466e-002, 4.338662e-003, -1.175996e-001, -9.203215e-002, 8.970671e-002, 7.942079e-002, -2.423357e-002, -1.162554e-001, -3.447916e-002, -6.891320e-003, -1.087894e-002, -4.012855e-002, -2.656314e-002, 6.895175e-003, 1.513667e-002, -7.094100e-003, -1.437339e-002, 9.012953e-004, -7.590504e-003, -4.177582e-002, 6.054917e-004, -8.657783e-003, -6.223275e-002, 1.366201e-003, 4.748943e-003, 1.800672e-002, 2.475353e-002, -2.346019e-002, 6.549444e-002, 3.614231e-002, -4.165596e-002, -1.158489e-001, -5.788690e-002, -9.832266e-003, 1.385153e-003, -6.281351e-002, -6.930113e-002, -2.433848e-002, 3.668015e-004, -5.616841e-003, -4.731726e-003, 4.722971e-003, 1.221422e-002, 6.815342e-002, 1.395416e-001, 3.236737e-002, 6.562959e-003, 3.507137e-002, -3.564219e-003, -1.811284e-002, 8.663417e-002, 8.514675e-002, 8.069847e-002, 4.551618e-002, -3.349190e-002, -1.047252e-001, -3.478233e-002, -1.922267e-002, 3.044523e-003, -2.345208e-002, -6.325146e-002, -2.770241e-002, -1.015897e-002, -5.913861e-003, 5.086485e-003, 3.363097e-002, 8.575010e-002, 1.700141e-001, 1.519548e-001, 7.288180e-002, 5.747531e-002, 2.374813e-002, -2.612098e-002, -6.659399e-002, 1.979403e-002, 1.585918e-001, 9.737790e-002, 2.567069e-002, -3.854837e-002, -8.168313e-002, 2.155294e-002, -1.096900e-002, -1.901002e-002, -3.160773e-005, -1.455931e-002, 4.037470e-003, 7.841679e-003, 1.139665e-002, 2.295337e-002, 4.008825e-002, 6.252187e-002, 9.033333e-002, 1.031458e-001, 5.678752e-002, 4.358536e-002, -4.627906e-003, -4.424884e-002, -6.381283e-002, -4.109742e-002, 8.751699e-002, 1.350320e-001, 1.301571e-002, -7.755909e-002, -1.042936e-001, 3.026839e-002, -8.663899e-003, -3.020369e-002, -7.658182e-003, 4.395641e-003, 1.950025e-002, 9.081861e-003, -1.288602e-003, 2.763852e-003, -2.129413e-002, -4.903496e-002, -5.949206e-003, -2.526644e-003, -3.296570e-002, 1.062035e-002, -3.127973e-002, -5.190937e-002, 1.014784e-002, 1.110135e-002, -8.378399e-003, 2.961858e-002, 2.879563e-002, -3.436369e-002, -7.486477e-002, 1.906666e-002, -2.283681e-003, -3.903362e-002, -8.538382e-003, 1.252738e-002, 1.941122e-002, -1.551619e-003, -2.541775e-002, -4.382842e-002, -8.935238e-002, -1.033645e-001, -4.106512e-002, -8.292031e-002, -8.524739e-002, 3.326131e-002, 5.490855e-003, 6.651052e-003, 1.077899e-001, 5.171152e-002, -4.691297e-002, -7.341125e-002, -4.173211e-002, 1.270791e-003, -1.975588e-002, 4.939377e-003, 1.561006e-002, -3.337509e-002, -1.825525e-003, 2.782028e-002, 2.604384e-002, 5.488556e-003, -2.455905e-002, -5.395092e-002, -8.357536e-002, -4.367477e-002, 7.048189e-003, -6.495584e-002, -1.040851e-001, 8.525704e-003, 3.120367e-002, 3.268470e-002, 2.341598e-002, -6.897679e-002, -3.275597e-002, -2.356376e-002, -5.285803e-002, 4.531266e-003, 1.119773e-002, -2.485278e-002, 8.126952e-003, -1.471196e-002, 5.578323e-003, 3.696015e-002, 4.578554e-002, 3.448968e-002, 5.912655e-003, -2.834504e-002, -2.552250e-002, 3.099228e-002, 5.446992e-002, 1.880208e-002, -4.738755e-002, -1.398726e-002, 6.453163e-002, 8.169643e-002, 5.045233e-002, -2.859830e-002, 4.510963e-002, 5.536179e-002, -1.057182e-002, 3.683148e-002, 6.270277e-002, -8.085395e-003, 1.291515e-002, 9.402056e-003, 2.170735e-002, 4.276590e-002, 5.000528e-002, 4.955254e-002, 3.024319e-002, 6.444579e-003, 5.533692e-003, 8.890066e-003, 6.518930e-003, 5.979721e-003, -2.831466e-003, 4.614578e-002, 5.838049e-002, -1.898894e-003, 5.210039e-003, 1.641595e-002, 3.591610e-002, 2.249503e-002, 1.360606e-002, 4.737243e-002, 8.159135e-002, 4.632145e-003, 3.509899e-002, 3.551348e-002, 3.865661e-002, 3.797311e-002, 3.773899e-002, 4.603391e-002, 2.879891e-002, 3.017582e-003, -1.757966e-002, -3.492854e-002, -2.812400e-002, -1.291852e-002, 8.443400e-004, 3.238168e-002, 1.327274e-002, -6.968657e-002, -5.168005e-002, -5.341790e-002, -4.340265e-002, -2.734630e-002, -9.484601e-003, 1.150967e-002, 5.610128e-002, -2.740208e-002, 1.872011e-002, 2.199594e-002, 5.836567e-002, 4.154777e-002, 1.652036e-002, 1.348643e-002, 1.462588e-002, -1.140347e-003, -3.132762e-002, -2.709183e-002, 1.705314e-003, 8.540059e-003, 3.520011e-003, 2.092013e-002, 6.353126e-003, -3.038789e-002, -2.041086e-002, -3.783545e-002, -3.722512e-002, -2.851869e-002, -2.091792e-002, -1.454374e-002, 1.415699e-002, -5.750672e-002, 7.300703e-003, -9.222406e-003, 3.809435e-002, 3.467575e-002, -1.119646e-002, -2.830673e-002, -6.064307e-003, 1.526883e-002, 9.311214e-003, 2.756561e-002, 1.494860e-002, -4.418489e-002, -5.987383e-002, -1.720298e-002, 9.916742e-003, 1.429477e-002, 2.693529e-003, -2.408440e-002, -2.897157e-002, -1.509488e-002, -1.031344e-002, 4.056800e-003, -1.621306e-003, -6.361201e-002, 1.311490e-002, -2.647378e-002, 2.771874e-003, 1.736512e-002, -3.728282e-002, -4.953585e-002, -1.325198e-002, 3.094134e-002, 4.017247e-002, 5.393807e-002, 1.584899e-002, -2.873461e-002, -2.417999e-002, -1.715119e-003, 1.290002e-002, 3.682173e-002, 1.936990e-002, -6.143154e-004, -7.221346e-003, 3.590487e-003, 3.624003e-002, 4.620891e-002, 2.025333e-002, -4.758026e-002, 3.065225e-002, -1.206469e-002, -2.505964e-002, 5.009276e-003, -4.177385e-002, -3.574199e-002, 1.214388e-002, 2.298189e-002, -1.786760e-002, -1.179595e-002, 4.238825e-002, 5.049008e-002, 1.372342e-002, -2.524458e-002, -5.186145e-002, -4.671936e-002, -3.170253e-002, 5.217448e-003, 4.514254e-002, 3.870571e-002, 1.656492e-002, -5.868222e-003, 2.733258e-002, -3.386520e-002, 4.956689e-002, 2.338276e-002, -3.971450e-002, 6.785407e-003, -1.871241e-002, -2.882285e-003, 3.675008e-002, 4.229193e-002, -9.736555e-003, -3.165106e-002, 6.714330e-003, 4.492929e-002, 3.642089e-002, -2.594503e-003, -2.734414e-002, -4.242486e-002, -1.878197e-002, 2.622216e-002, 3.986747e-002, 1.060761e-002, -4.145132e-002, -6.507716e-002, -2.089128e-003, -


© ISO/IEC 2004 — All rights reserved

Copyright International Organization for Standardization
Provided by IHS under license with ISO
No reproduction or networking permitted without license from IHS
Not for Resale

2.763429e-002, 4.824300e-002, 2.948791e-002, -3.050798e-002, 8.484157e-003, 2.159692e-003, 1.755001e-002, 2.667934e-002, 2.694077e-002, 2.796891e-002, -3.900242e-004, -2.279282e-002, -1.482744e-002, -1.017084e-002, -1.256401e-002, -1.860109e-002, -2.261278e-002, -1.273705e-002, -4.329844e-003, -1.255953e-002, -2.529100e-002, -2.991124e-002, -1.510121e-002, 1.659157e-002, -1.850171e-002, 1.632926e-002, -2.749459e-003, -1.487997e-002, 4.753344e-003, 2.755481e-003, 3.061269e-003, -1.801927e-002, -2.320466e-002, 5.906766e-003, -2.175221e-003, -2.422804e-002, -1.908915e-002, -1.303653e-002, -9.101653e-003, -1.134421e-003, 1.393145e-002, 1.047259e-002, -3.725002e-003, -1.145828e-002, -2.810915e-002, -2.822996e-002, -1.211233e-002, 1.313667e-002, -1.946411e-002, -2.470535e-003, -3.162094e-002, 2.874366e-003, -2.102857e-003, -1.059836e-002, -2.422076e-003, -2.558226e-002, -4.360125e-002, -3.230960e-002, -7.720316e-003, -1.488299e-002, -9.608200e-003, 2.982357e-003, 6.031172e-003, 9.666587e-003, 2.413650e-002, 2.456796e-002, 1.469254e-002, 3.099373e-003, -1.716650e-002, -3.842960e-002, -4.308407e-002, -7.835230e-003, 3.143035e-002, 3.349139e-002, 1.882555e-002, 6.210727e-002, 3.155886e-002, 1.004675e-002, 2.300831e-002, 2.501173e-002, -7.727911e-003, -3.337543e-002, -1.954248e-002, -9.422114e-003, -7.394318e-003, -1.033472e-002, -1.986277e-002, -8.284571e-003, 1.058060e-002, 3.305208e-002, 4.056220e-002, 3.302932e-002, 4.590240e-003, -2.507056e-002, -3.085549e-002, 4.867732e-003, 7.306370e-002, 3.991015e-002, 3.795962e-002, 6.989880e-002, 2.994395e-002, 1.444110e-002, 3.293573e-002, 5.343364e-002, 3.218537e-002, -8.507453e-003, -3.284062e-002, -2.810955e-002, -1.535172e-002, -1.450991e-002, -2.627099e-002, -2.300256e-002, -5.824697e-003, 2.098505e-002, 3.364735e-002, 2.231582e-002, -1.719990e-003, -1.703162e-002, -3.126212e-003, 2.765934e-002, 4.898482e-003, -2.316678e-002, -6.837155e-003, 1.444014e-002, -1.007771e-003, -1.997728e-002, 1.811149e-003, 5.711557e-003, -4.535447e-003, -4.412982e-003, -1.986910e-002, -2.268108e-002, -9.207515e-003, 3.873058e-003, 1.057828e-002, 2.596421e-003, 4.135468e-003, 2.237642e-002, 2.752983e-002, 1.314986e-002, -7.410912e-003, -1.804020e-002, 4.079065e-003, 2.404371e-002, -3.270624e-002, -4.234693e-002, -5.581150e-002, -4.375193e-002, -4.248377e-002, -5.124831e-002, -5.183100e-002, -6.767688e-002, -8.330945e-002, -5.014628e-002, -2.319369e-002, 6.341376e-004, 1.092678e-002, 3.202631e-002, 4.668893e-002, 3.773372e-002, 3.319254e-002, 4.241100e-002, 4.042418e-002, 3.130873e-002, 5.245567e-003, -1.821463e-002, -7.550828e-003, -1.875384e-003},
{2.845109e-002, -2.556805e-002, -5.353596e-003, 8.042411e-003, 4.482825e-002, 7.481230e-002, 1.708076e-002, -8.612043e-002, -8.638512e-002, 4.954549e-002, 1.346549e-001, 7.709416e-002, -6.526191e-002, 4.515314e-003, 2.433241e-002, -9.562028e-002, -9.013497e-002, 1.584655e-002, 7.561900e-002, -6.292580e-002, 5.336937e-002, 1.041842e-001, 5.461064e-003, -9.627262e-002, 1.311791e-002, -2.367234e-002, -3.302659e-003, -3.646496e-002, -1.794193e-002, 4.006697e-002, 2.782967e-002, -7.241868e-003, 1.809678e-002, 7.488410e-002, 7.076350e-002, -5.386059e-002, -1.194882e-001, 3.305696e-002, 3.261886e-002, -5.003354e-002, -2.904826e-002, 3.435018e-002, 1.040899e-001, -7.993210e-002, -3.281670e-002, 6.700602e-002, 4.687472e-002, -1.256580e-002, 5.491228e-003, -3.774885e-003, 2.574251e-002, -3.737479e-002, -3.521314e-002, 4.644132e-003, 9.103083e-003, -2.050180e-003, 1.371014e-002, 1.042999e-002, -5.079842e-002, -1.311695e-001, -6.131428e-002, 4.797625e-002, 1.661818e-002, -6.552312e-003, 1.292011e-002, 4.572724e-002, 7.754119e-002, -2.030137e-002, -1.125901e-001, 1.089297e-002, 3.885369e-002, 1.254085e-002, -3.521944e-004, 1.956877e-003, 4.914756e-002, -1.794517e-002, 4.528750e-003, 2.211581e-002, -6.363806e-003, -2.072266e-002, -2.138225e-002, -3.896532e-002, -7.742827e-002, -8.338754e-002, 1.381606e-002, 2.395130e-002, 2.549057e-003, -2.494006e-003, 1.750567e-004, 4.019652e-002, 3.230002e-002, 2.383014e-002, -5.416929e-002, -3.469171e-002, 1.230033e-002, 4.786575e-003, -1.565699e-003, -8.351791e-003, 3.983373e-002, 1.349928e-003, 4.444172e-002, 8.947345e-002, 5.057094e-002, 3.116163e-002, 2.194356e-002, 1.145410e-002, -1.484653e-002, -9.041972e-003, 1.718270e-002, -5.893731e-003, -5.748206e-003, -2.482784e-002, -2.571139e-002, 1.492198e-002, -4.458921e-003, -4.852240e-002, 1.239607e-002, 2.488605e-002, 2.543429e-002, 2.267636e-002, 1.576090e-002, -3.658056e-002, -6.163794e-003, 1.600118e-003, 4.798536e-002, 9.560911e-002, 8.386538e-002, 7.269513e-002, 5.927445e-002, 1.946707e-002, -2.840036e-002, -9.450697e-003, -8.723432e-003, 3.983701e-003, 1.060638e-002, -3.336915e-002, -2.614560e-002, 2.929819e-002, 2.329583e-002, -8.410269e-002, -4.181603e-002, 4.117853e-002, 6.981705e-002, 6.302388e-002, 1.572706e-002, -4.777503e-002, -4.774788e-002, -3.620018e-002, 1.642832e-002, 4.055498e-002, 1.675391e-002, -7.399250e-003, -4.073622e-002, -6.620738e-002, -3.365644e-002, -9.685041e-003, -4.919842e-002, 4.403243e-002, 4.607993e-002, -8.447342e-003, -8.843030e-003, 6.930768e-002, 6.656533e-002, -8.007588e-002, -9.807911e-002, -2.421884e-002, 1.190480e-002, 1.910043e-002, 9.587434e-003, -4.672806e-002, -7.784819e-002, -5.748594e-002, 3.764473e-003, 2.285514e-002, -8.933815e-003, -3.714733e-002, -4.951235e-002, -1.608724e-002, 2.479051e-002, -1.634587e-002, -6.307560e-002, -1.218242e-002, -9.373526e-003, -1.555629e-003, -3.106166e-002, 1.047123e-002, -4.796772e-003, -1.373208e-001, -1.070407e-001, -4.917426e-003, -1.987258e-002, -2.510990e-002, -4.548480e-003, -3.113449e-002, -8.516132e-002, -6.212764e-002, -9.389827e-004, 1.819992e-002, -1.311679e-002, -3.125298e-002, -1.546254e-002, 3.619986e-002, 6.795541e-002, 3.335851e-002, -1.155479e-002, -7.378350e-003, 3.651998e-002, 4.532231e-002, -3.556449e-002, -5.748665e-003, 1.136836e-002, -1.031513e-001, -1.752310e-002, 9.474028e-002, 8.706099e-003, -4.832032e-002, -

© ISO/IEC 2004 — All rights reserved


Copyright International Organization for Standardization
Provided by IHS under license with ISO
No reproduction or networking permitted without license from IHS
Not for Resale

9.132415e-003, -8.579302e-003, -6.765168e-002, -5.641637e-002, -3.512096e-003, 2.316718e-002, -1.190191e-002, -2.545154e-002, -5.107104e-003, 3.734626e-002, 8.092525e-002, 6.153256e-002, -5.214240e-002, -1.078709e-001, 9.368634e-003, 6.815462e-002, -1.261607e-002, -2.271688e-002, -1.699211e-002, -5.911370e-002, 4.192787e-002, 1.368473e-001, 5.222667e-002, -5.568022e-002, -1.231798e-002, 1.037283e-002, -2.199208e-002, -3.118080e-002, -6.036221e-003, 3.086189e-002, -8.048605e-003, -4.025783e-002, -2.315619e-002, 4.422671e-002, 9.930008e-002, 4.950297e-002, -8.190269e-002, -1.035392e-001, 2.503527e-002, 7.980852e-002, 3.817328e-002, 4.306077e-002, 1.794200e-002, -3.532847e-002, 1.329548e-003, 5.353541e-002, 2.363351e-002, -6.665878e-002, 2.524263e-003, 2.825915e-002, 1.927508e-002, 2.424070e-002, 1.184715e-002, 4.810279e-002, 2.167671e-003, -6.855325e-002, -4.613203e-002, 4.787223e-002, 9.883284e-002, 5.226008e-002, -2.416753e-002, -5.220628e-002, -2.913805e-002, -3.503828e-002, -5.404798e-002, -2.696275e-002, -1.952467e-003, 1.550207e-002, 2.381287e-002, 3.134218e-002, 8.358660e-003, -7.845770e-002, 2.567266e-002, 2.674658e-002, 1.862308e-002, 7.148555e-002, 3.449196e-002, 5.488000e-002, 7.925136e-003, -8.909077e-002, -6.437359e-002, 3.273799e-002, 7.589005e-002, 6.770024e-002, 4.276883e-002, 1.249769e-002, -4.957727e-002, -1.104804e-001, -9.075709e-002, -9.006720e-002, -4.653412e-002, 3.205364e-002, 8.503190e-002, 7.892010e-002, 1.812872e-002, -8.468161e-002, 4.095573e-002, 2.264436e-002, -1.383674e-002, 7.827476e-002, 5.609902e-002, 5.168062e-002, 1.458768e-002, -7.616852e-002, -7.202997e-002, -2.040934e-002, 3.176038e-002, 5.735162e-002, 5.254805e-002, 3.238409e-002, -1.511524e-003, -2.710750e-002, 4.509636e-003, -2.777917e-002, -4.112462e-002, -1.727894e-002, 3.509948e-002, 6.176409e-002, 2.295587e-002, -7.148508e-002, 1.397207e-002, -7.784615e-003, -5.012732e-002, 5.190967e-002, 6.696061e-002, 3.971421e-002, 2.255458e-002, -3.678194e-002, -4.504956e-002, -1.552240e-002, 2.337955e-002, 4.127148e-002, 8.168424e-003, -1.125956e-002, -1.748729e-002, -1.462030e-002, 3.542385e-002, 3.133412e-002, 1.837735e-002, -1.631333e-003, -1.104647e-002, -4.980450e-003, 1.209119e-003, -4.944835e-002, 2.022324e-003, -2.950660e-002, -3.115719e-002, 5.622059e-003, 5.055433e-002, 2.397184e-002, 1.152528e-002, -9.825132e-003, -3.373090e-002, -3.023610e-002, 1.666821e-002, 3.759820e-002, 1.600781e-002, -4.229014e-003, -2.098345e-002, -1.640654e-002, 2.864772e-002, 5.411184e-002, 4.650186e-002, 1.394445e-002, -2.011253e-002, -1.520352e-002, 1.632620e-002, 9.138820e-003, 7.959939e-003, -3.249586e-002, 2.764179e-002, -1.435719e-002, 2.484272e-002, -2.979402e-003, -1.970572e-002, -2.157303e-002, -5.171614e-002, -3.801500e-002, 1.130843e-002, 2.994881e-002, 2.184637e-002, 5.206320e-003, -2.280487e-002, -2.711348e-002, -1.040252e-002, -1.584442e-003, -1.677451e-003, -5.605358e-004, -2.028447e-002, -1.758295e-002, 1.529149e-002, 1.652129e-002, 2.094303e-002, -1.435957e-002, 5.997147e-002, -5.768228e-003, 6.508736e-003, -8.568151e-003, -2.850914e-002, -6.248683e-003, 8.865585e-004, 3.193479e-002, 5.049815e-002, 2.840007e-002, -4.257873e-003, -3.184792e-002, -4.002884e-002, -1.765117e-002, 1.431263e-002, 2.656904e-002, 4.308841e-002, 3.972164e-002, 3.163950e-002, 4.180460e-002, 3.798075e-002, 9.242414e-004, 9.094754e-003, -2.609810e-002, 3.219308e-002, -2.947340e-003, 2.066121e-002, 6.716656e-003, -1.197838e-002, 1.956606e-002, 3.564508e-002, 1.986056e-002, 6.180671e-003, -1.329876e-002, -4.155982e-002, -5.962048e-002, -6.169502e-002, -2.689990e-002, 6.093795e-003, 1.165976e-002, 5.524057e-003, -1.396690e-002, -2.510237e-002, 2.318763e-003, 8.742139e-003, -2.242256e-002, -2.286871e-002, -3.190143e-002, 7.481278e-003, -1.308646e-002, 2.582216e-002, 2.696011e-002, -7.650317e-003, 2.288953e-002, 3.848550e-002, -9.648588e-003, -3.065620e-002, -1.454756e-002, -6.535228e-003, 9.230797e-004, 1.518836e-002, 3.395662e-002, 4.054541e-002, 1.871343e-002, -2.099945e-002, -4.376946e-002, -3.381580e-002, -1.315449e-002, -4.445295e-005, -1.764582e-002, -2.431741e-002, -1.509404e-002, 4.187255e-002, -2.051676e-002, -5.579177e-003, 1.436517e-002, -2.998662e-002, -1.113846e-002, 1.202225e-002, -3.858898e-002, -5.771882e-002, -3.739684e-002, -5.658590e-003, 1.893742e-002, 3.523373e-002, 2.991544e-002, 9.722693e-003, -1.985403e-002, -3.848125e-002, -2.875325e-002, 6.438903e-003, 2.356575e-002, 1.423375e-002, 6.494949e-003, 1.072833e-002, 2.022374e-002, 6.537578e-002, -3.787545e-002, -7.017631e-002, -2.477931e-002, -4.928778e-002, -4.931272e-002, -2.488619e-002, -5.410802e-002, -8.007041e-002, -5.942571e-002, -8.150724e-003, 2.788348e-002, 2.294465e-002, -5.331208e-004, -1.590302e-002, -2.562259e-002, -1.772266e-002, 6.266255e-003, 3.100205e-002, 3.096958e-002, 1.259327e-002, 1.782461e-002, -9.890908e-003, -3.862998e-002, 1.008926e-002, -2.459297e-002, -3.359280e-002, 9.367631e-003, -6.858582e-003, -3.474366e-002, -2.159477e-002, -2.135254e-002, -4.365374e-002, -3.851260e-002, 4.315208e-003, 4.068471e-002, 3.858078e-002, 1.652852e-002, 1.557158e-002, 1.105460e-002, 1.601097e-002, 2.951044e-002, 1.412607e-002, -1.249082e-002, -2.873434e-002, 1.162361e-002, -3.893478e-002, -6.765608e-002, 1.836426e-002, 5.498207e-002, 7.220618e-002, 7.912978e-002, 6.495349e-002, 2.321155e-002, 2.019035e-002, 3.000600e-002, 1.526523e-002, 7.931133e-004, 1.643282e-002, 3.137467e-002, 2.503614e-002, 2.787350e-002, 3.098292e-002, 1.538234e-002, 8.437688e-003, 4.541608e-003, -4.233937e-002, -7.455296e-002, -5.843132e-002, 1.582554e-002},
{8.404819e-002, 6.869629e-002, -1.039262e-001, -5.001903e-002, 1.036090e-001, 4.006123e-002, -9.377292e-002, -8.664927e-002, 9.184715e-003, 4.836501e-002, 2.391481e-002, -5.246251e-002, -9.552244e-002, 2.470839e-002, -1.216522e-001, -4.093299e-002, -2.540451e-002, -1.546780e-002, 2.898521e-003, -1.797727e-002, 5.842318e-003, 2.199899e-002, 4.156059e-002, 9.964350e-002,


© ISO/IEC 2004 — All rights reserved

Copyright International Organization for Standardization
Provided by IHS under license with ISO
No reproduction or networking permitted without license from IHS
Not for Resale

4.571445e-002, 5.440202e-002, -5.100952e-002, -1.048915e-002, 8.506754e-002, 1.465023e-002, -5.472904e-002, -2.901742e-002, 1.263502e-002, 2.789816e-002, 1.644627e-002, -2.448098e-002, 1.391376e-002, 7.348485e-002, -1.023909e-001, 1.323695e-002, -1.584670e-002, -3.838317e-002, 4.340927e-002, 1.928050e-002, -1.211152e-003, 1.891402e-002, 7.171778e-002, 1.062193e-001, -1.335487e-002, 1.951066e-002, -1.760299e-003, 2.674660e-002, 5.807633e-002, -1.821424e-002, -8.462589e-002, -7.930302e-002, -5.721667e-002, -3.458713e-002, -2.707624e-003, 2.347320e-002, 6.854010e-002, 3.612939e-003, -4.571336e-002, 4.108326e-002, -1.318119e-002, -7.250354e-002, 2.714734e-002, 2.624821e-002, -3.516192e-002, -4.052127e-002, -2.498197e-002, 8.592497e-004, -3.527051e-002, -1.424251e-003, 5.686269e-003, 4.113971e-002, 3.439556e-002, -2.188590e-002, -5.205804e-002, -3.417614e-002, -9.411493e-003, 2.245296e-002, 5.267098e-002, 3.104659e-002, 5.341500e-003, -3.677262e-002, 2.324697e-002, 8.673841e-002, 2.612931e-002, -6.897530e-002, -1.265582e-002, 1.442550e-002, -7.609002e-002, -5.659760e-002, -2.913276e-002, -1.500681e-002, -3.220118e-002, -9.560449e-003, 1.520235e-002, 7.021076e-003, -3.279871e-002, -4.811734e-002, -1.424777e-002, 3.380596e-002, 6.090117e-002, 6.099612e-002, 4.710720e-003, -6.783623e-002, -8.064349e-002, -9.041394e-004, 5.798485e-002, 1.182728e-001, 8.022799e-002, -8.848924e-004, -3.042015e-002, 3.047911e-002, -5.982454e-002, -8.540056e-002, -2.489915e-002, 3.435537e-004, -3.916709e-002, -2.311952e-002, 1.910239e-002, 1.817449e-002, -6.907418e-002, -7.794043e-002, -2.353821e-002, 2.293423e-002, 4.961479e-002, 2.026331e-002, -5.825117e-002, -1.075507e-001, -2.546103e-003, 2.533715e-002, 2.286334e-002, 8.630904e-002, 9.445219e-002, 4.212295e-002, -1.746382e-002, 3.336948e-002, -3.658734e-002, -4.942667e-002, 1.352514e-002, 4.077128e-002, -3.982423e-002, -3.069944e-002, 7.788746e-003, 2.080736e-002, -3.829454e-002, -3.302198e-002, 3.290913e-002, 8.917865e-002, 1.004564e-001, 4.219918e-002, -4.915765e-002, -2.550770e-002, 5.559795e-002, -4.898119e-002, -4.862479e-002, 2.097021e-002, 4.576064e-002, 2.367821e-002, -1.216007e-002, 1.386130e-002, -7.161357e-003, -3.719952e-002, 4.403771e-002, 9.242459e-002, -1.025090e-002, -1.595148e-002, -6.030429e-003, 5.328137e-003, -4.699395e-002, -3.234089e-002, 4.394686e-002, 1.008974e-001, 9.856948e-002, 4.965793e-002, -4.093691e-003, 2.870298e-002, 2.219604e-002, -3.779449e-002, -1.387819e-002, -4.562912e-002, -6.351312e-002, -4.507685e-002, -3.116537e-002, 2.319365e-002, 3.774321e-002, -2.563799e-002, 1.204158e-002, 8.048759e-002, 1.410405e-002, 1.177277e-002, -2.045770e-002, -1.022287e-002, -6.216429e-002, -6.653795e-002, -4.134514e-004, 5.338205e-002, 6.741145e-002, 4.265267e-002, -2.798240e-003, -7.843042e-003, 1.910377e-002, 2.525575e-002, 1.539321e-002, -5.588590e-002, -5.585065e-002, -1.975913e-002, -1.477384e-002, 4.126719e-002, 6.496502e-002, -2.157187e-002, -3.743332e-002, 1.896324e-002, 2.932163e-002, 3.140668e-002, -2.220399e-002, -2.222671e-002, -5.383089e-002, -7.706390e-002, -2.141147e-002, 4.106860e-002, 6.643737e-002, 2.701077e-002, -6.161219e-002, -5.643479e-002, -2.595298e-003, -4.644956e-002, -4.626265e-002, -3.029030e-003, 3.053248e-002, 1.245278e-002, -9.992198e-003, 7.135305e-002, 5.981613e-002, -5.263647e-002, -5.418343e-002, -2.082069e-002, 1.347748e-002, 3.696457e-002, -2.635409e-002, -2.640077e-002, -2.319398e-002, -5.083957e-002, -2.222533e-003, 5.906405e-002, 5.403915e-002, -6.160099e-002, -1.257642e-001, -3.558034e-002, 5.314866e-002, 6.661508e-002, 4.011904e-003, -4.686207e-002, -3.315841e-002, -2.467554e-002, 6.815321e-002, 1.345545e-001, 5.441959e-002, -6.725588e-002, -7.915904e-002, -3.203240e-002, -1.312252e-002, 2.318255e-002, -1.520762e-002, -3.001830e-002, -5.836783e-003, -1.593539e-002, 2.397085e-002, 7.180993e-002, 1.244120e-002, -1.136498e-001, -9.324409e-002, 6.480442e-003, 5.365538e-002, 3.321655e-002, -5.207282e-002, -7.360266e-002, -2.047361e-002, -3.655733e-002, 8.752739e-003, 4.288376e-002, 3.103794e-003, -6.643901e-002, -6.599969e-002, -1.991202e-002, -4.269746e-002, -1.664068e-002, -6.637114e-003, -2.230606e-002, 9.538637e-003, 2.159455e-002, 6.047995e-002, 9.057286e-002, 1.039563e-002, -5.983344e-002, -1.250604e-002, 4.141935e-002, 2.646770e-002, -3.685033e-002, -6.521720e-002, -1.634604e-002, 6.858837e-002, 5.170359e-002, 2.910904e-002, 1.014618e-002, -1.581307e-002, -3.123279e-002, -5.776360e-003, 4.063636e-002, -1.242207e-002, -3.052649e-002, -1.100157e-002, -1.422572e-002, 1.368890e-003, 4.398555e-002, 6.524172e-002, 7.102911e-002, 9.332321e-003, -6.100658e-003, 1.347418e-002, -9.580353e-003, -4.683280e-002, -5.250221e-002, -3.477007e-002, -1.609060e-002, 4.921460e-002, 3.708973e-002, -5.386386e-003, -4.718470e-002, -7.866627e-002, -4.460905e-002, 4.375420e-002, 1.016903e-001, 1.162297e-002, -7.961024e-003, -2.243446e-002, -1.326484e-003, -7.135640e-003, 3.638422e-002, 4.183048e-002, 1.587974e-002, -2.643659e-002, -6.261473e-003, 3.161240e-002, 2.903100e-002, 2.475533e-002, 3.431699e-002, 7.204182e-003, -3.062793e-002, -1.356918e-002, -3.151938e-002, -1.406860e-002, -3.675574e-003, -8.318502e-005, 1.260207e-002, 3.237633e-002, 7.086178e-002, 2.260935e-002, 2.720126e-002, -3.494544e-002, 8.183838e-003, -6.462375e-003, 1.888634e-002, 1.225461e-002, -4.371992e-002, -7.298864e-002, -4.411516e-002, -1.619812e-002, 3.254876e-002, 5.364055e-002, 4.383083e-002, -1.399739e-003, -3.612769e-002, -2.452740e-002, -5.082329e-002, 4.119565e-003, 5.825077e-002, 7.988694e-002, 2.411942e-002, -6.213939e-002, -4.575699e-002, 6.864102e-003, 5.086084e-002, -3.382219e-002, 9.852922e-003, 4.127651e-003, 4.045899e-003, 3.712598e-003, -3.364726e-002, -3.970469e-002, -1.799185e-002, 5.589698e-003, 6.198218e-002, 9.349492e-002, 7.699723e-002, 1.944412e-002, -1.632087e-002, -2.152521e-002, -3.079635e-002, 4.940101e-003, 3.631021e-002, 4.101348e-002, -1.594271e-002, -6.923892e-002, -5.397071e-002,

© ISO/IEC 2004 — All rights reserved


Copyright International Organization for Standardization
Provided by IHS under license with ISO
No reproduction or networking permitted without license from IHS
Not for Resale

2.123319e-002, 2.938372e-002, -2.700554e-003, 1.639454e-002, 1.569201e-002, -3.127715e-003, 1.599245e-002, 1.763816e-002, -7.213235e-003, -2.618955e-002, -6.843830e-004, 1.665593e-002, 1.769706e-002, 4.293573e-003, -3.971041e-003, -2.070979e-002, -3.218275e-002, -2.671583e-002, -1.151936e-002, 8.332910e-003, 1.257345e-003, -3.800998e-002, -2.520946e-002, 1.819050e-002, 3.390790e-002, -3.419240e-002, 1.884101e-002, 3.866789e-002, 2.922017e-002, 1.252902e-002, 3.905585e-002, 4.597619e-002, 8.727830e-003, 3.679430e-003, 2.682293e-002, 2.782704e-002, 8.511792e-003, -2.353976e-002, -3.898587e-002, -4.996948e-002, -5.044258e-002, -3.285507e-002, -1.528961e-003, 7.776982e-003, 5.391005e-003, 9.965724e-003, 3.472169e-002, 5.550238e-002, -4.640727e-003, -5.994619e-002, 8.653618e-003, 5.493492e-002, 4.241142e-002, 2.058761e-002, 5.471093e-002, 4.213490e-002, 1.782260e-002, 2.385474e-002, 3.825000e-002, 2.668473e-002, 1.303880e-002, -1.359236e-002, -2.431495e-002, -2.126358e-002, -1.935961e-002, -2.515818e-002, -2.467855e-002, -1.581678e-002, 4.312817e-003, 2.566668e-002, 3.088446e-002, 2.491078e-002, -1.552803e-002, 5.504531e-003, 5.816256e-003, 1.146083e-002, 3.141392e-003, -4.643527e-003, 4.452367e-002, 2.503305e-002, -1.922140e-002, 1.130829e-002, 3.051167e-002, -1.587334e-003, -4.318750e-002, -6.334718e-002, -4.712854e-002, -1.386493e-002, 6.273000e-003, 4.458385e-003, -1.585926e-002, -2.187129e-002, -1.385411e-002, 4.430188e-003, 1.221878e-002, 5.184370e-003, 1.934366e-002, 5.598630e-002, -1.209723e-002, -5.193915e-002, -3.847890e-002, -2.509536e-002, 1.677711e-002, -1.648163e-003, -4.989570e-002, -3.111753e-002, 1.495326e-002, 6.762445e-003, -5.040211e-002, -6.793525e-002, -2.202121e-002, 3.884714e-002, 6.492271e-002, 4.561185e-002, 4.477628e-003, -2.296579e-002, -1.754657e-002, -3.609762e-003, 8.969854e-004, 7.212354e-003, -3.043318e-003, -2.462414e-004, -1.816994e-002, -3.276260e-002, -1.329413e-002, -1.757797e-002, -8.843179e-004, -2.594825e-003, -4.181509e-002, -4.238960e-002, -2.865583e-003, 1.169200e-002, -1.645147e-002, -2.327142e-002, 1.625820e-002, 5.735632e-002, 5.131454e-002, 1.911888e-002, -9.036726e-003, -3.024877e-002, -2.293630e-002, -6.333114e-003, 3.352042e-003, 2.376290e-002, -9.721028e-002, -5.481134e-002, -3.683321e-003, 3.206637e-002, 4.039226e-002, 2.114233e-002, -8.263520e-003, 4.308838e-003, -7.045605e-003, -2.418221e-002, 2.069326e-004, 1.701902e-002, 1.916694e-002, 2.922682e-002, 5.073612e-002, 4.949051e-002, 3.184799e-002, -2.104107e-003, -3.797857e-002, -5.356333e-002, -3.871021e-002, -2.080123e-002, 5.214456e-003, 3.104085e-002},
{1.543991e-002, 7.155829e-002, 7.307063e-003, -1.254935e-003, -4.057633e-002, -1.586138e-002, 1.961985e-002, 3.092303e-002, -1.576346e-002, -2.301410e-002, 2.910206e-002, 2.569274e-002, -2.161293e-002, -3.512262e-002, 2.688344e-002, -5.695195e-002, -7.691276e-002, -3.361357e-002, -2.792124e-002, 2.566791e-002, 1.033395e-001, 9.620939e-002, 4.813779e-002, -4.547476e-002, -7.455308e-003, 3.463348e-002, -1.190399e-002, -1.060365e-002, -2.480122e-002, -1.176077e-002, 1.147579e-002, 3.602309e-002, 5.201843e-002, 6.030193e-002, 5.395748e-002, -4.057885e-003, -6.432050e-002, -3.774223e-002, 2.851447e-002, -2.793989e-002, -1.972514e-002, 4.148031e-002, -1.177314e-002, -3.376261e-002, 1.103175e-002, -2.711708e-003, -7.117637e-002, -1.169884e-001, -1.186509e-002, 4.952987e-003, -3.040700e-002, -1.827023e-002, -1.316265e-002, -2.560355e-002, 7.969447e-004, 3.387736e-002, 5.613575e-002, 6.372633e-002, 1.998376e-002, -5.183303e-002, -4.197045e-002, 2.420164e-002, 3.524922e-002, 2.812986e-002, 2.069049e-002, 8.304923e-002, 3.316557e-002, -6.910648e-002, -2.394663e-002, -4.441260e-002, -9.268491e-002, -1.181477e-001, -9.100018e-003, -1.248252e-002, -3.411146e-002, -1.448460e-003, 2.084250e-002, -1.939366e-002, -2.127430e-002, -4.601309e-003, 1.113707e-002, 9.542216e-003, -7.082597e-003, 4.645164e-003, 4.274170e-002, 1.885020e-002, 4.670926e-002, 6.051417e-002, 2.664888e-002, 7.273220e-002, 6.558946e-002, -6.459026e-002, -4.655911e-003, 1.605457e-002, -5.673814e-002, -9.412461e-002, -6.889985e-003, -1.086655e-002, -4.315607e-002, 3.636523e-002, 8.793183e-002, 3.954278e-002, 2.108207e-002, 2.940338e-002, 4.353130e-002, 5.974784e-002, 7.170621e-002, 7.158504e-002, 1.632132e-002, -1.517054e-002, 2.504472e-002, 2.629657e-002, -2.452568e-002, -1.739697e-003, 3.374185e-002, -3.238740e-002, -4.182830e-002, 6.867420e-002, 4.528122e-002, -1.363967e-002, -7.578862e-005, -3.698757e-003, -5.551269e-002, -1.578679e-003, 6.407160e-002, 3.888695e-002, 2.954129e-002, 4.360987e-002, 5.010643e-002, 3.820816e-002, -1.855840e-003, -3.519916e-002, -1.474718e-002, -1.759745e-002, -1.432967e-002, -8.471406e-003, -6.024786e-002, -6.923698e-002, -2.518578e-002, 1.568887e-002, 7.465577e-003, -2.117591e-003, -2.272736e-003, -1.269066e-002, -9.872662e-003, -3.964727e-003, -3.977216e-002, -1.898230e-002, 4.503921e-003, -5.207539e-002, -9.714174e-002, -1.045841e-001, -9.430882e-002, -8.053468e-002, -6.403960e-002, -1.693487e-002, 6.211358e-002, 6.101318e-002, 2.917109e-002, 4.313691e-002, -2.312086e-002, -4.070327e-002, 8.737285e-003, 3.515004e-002, 8.716610e-002, 7.121854e-002, -3.074596e-002, -9.042298e-002, -3.526885e-002, -5.281156e-003, -1.891509e-002, -7.899961e-003, 1.883197e-002, -1.217590e-002, -5.844316e-002, -7.067206e-002, -3.484058e-002, 6.816748e-003, 9.119606e-003, 1.486156e-002, 3.699896e-002, 8.425492e-003, 1.741368e-002, 4.959398e-002, -4.581770e-002, -5.276537e-002, 3.261160e-002, -1.538309e-002, -1.366266e-002, 1.119591e-001, 1.076191e-001, 3.421271e-002, -5.957140e-002, -4.488518e-003, -6.610766e-003, -7.913737e-003, 1.998562e-002, 2.319208e-002, 4.611492e-003, 1.415826e-002, 5.269736e-002, 5.963581e-002, 1.145917e-002, -3.609939e-002, -5.411912e-002, -5.325610e-002, 1.633016e-002, 3.230867e-002, -2.694633e-002, -1.555188e-002, 5.517418e-002, -5.065902e-002, -1.268732e-001, 4.922721e-003, 1.208463e-001, 1.140300e-001, -


© ISO/IEC 2004 — All rights reserved

Copyright International Organization for Standardization
Provided by IHS under license with ISO
No reproduction or networking permitted without license from IHS
Not for Resale

6.937747e-002, -1.279198e-002, 1.610305e-003, -2.349901e-002, -1.428504e-002, 1.328833e-002, 2.135453e-002, 3.600972e-002, 6.256292e-002, 3.176557e-002, -2.410000e-002, -5.929265e-002, -2.507177e-002, -3.208283e-002, -4.614923e-002, -4.333566e-002, -1.427971e-002, 4.619834e-002, 5.407562e-002, -3.845867e-002, -7.356245e-002, -1.791067e-002, 4.260838e-002, 8.589785e-002, -2.127995e-002, -2.956671e-004, 1.288425e-002, -2.734018e-002, -4.739523e-002, -3.251501e-002, 2.960661e-003, 2.490899e-002, 3.879864e-002, 4.726879e-003, -2.831433e-002, -2.842993e-002, 2.251827e-002, 7.245100e-002, 4.122232e-002, -4.129144e-002, -5.423519e-002, 6.168315e-002, 5.190052e-002, 1.683061e-004, 8.576933e-003, 4.598234e-002, 8.401641e-003, -1.205367e-003, 3.686384e-002, 2.636719e-002, 3.470715e-002, -5.043488e-003, -5.669851e-002, -6.779596e-002, -1.364903e-002, 1.476947e-002, 1.315410e-002, -2.462325e-002, -5.301638e-002, -5.280490e-002, -1.903828e-002, 5.443488e-002, 8.519087e-002, 1.851824e-002, -3.862880e-002, 4.181766e-002, 8.131601e-003, -3.345147e-002, -6.817953e-003, 5.001631e-002, 2.978370e-002, -3.902165e-002, 5.243746e-002, 3.173244e-002, 2.489843e-002, 2.381917e-002, -3.007186e-002, -7.590795e-002, -2.380705e-002, 5.112127e-003, -1.939888e-002, -5.458157e-002, -8.241693e-002, -7.927564e-002, -5.140511e-002, 3.105498e-004, 2.842264e-002, 2.702750e-002, 9.166677e-003, 5.847468e-002, 1.438266e-002, -5.941130e-002, -5.825566e-002, -1.612463e-002, -3.488082e-003, -6.103091e-002, 1.821671e-002, -1.801168e-002, -2.449508e-003, 1.597148e-002, 1.342399e-002, -5.567146e-002, -2.917348e-002, -8.114686e-003, -4.569768e-002, -5.007246e-002, -4.166206e-003, 4.261066e-002, 2.692424e-002, -2.677234e-002, -3.603534e-002, 2.911872e-003, 2.129748e-002, 4.072190e-002, 4.404489e-002, 2.953868e-003, -1.579798e-002, -2.206674e-002, -3.716715e-002, -1.003160e-001, 2.422279e-002, -5.091459e-002, -9.534836e-003, -2.928309e-003, 4.371561e-002, -5.291150e-003, -1.997026e-002, -1.877238e-002, -5.932048e-002, -4.389829e-002, 3.881867e-002, 6.373930e-002, -1.437367e-002, -8.473141e-002, -7.124960e-002, -2.017094e-002, 1.979593e-002, 2.282585e-002, 2.246986e-002, 5.996918e-003, 9.131698e-003, 1.855732e-002, -9.210156e-003, -8.751303e-002, 5.345264e-002, -2.473271e-002, -1.290431e-002, -2.417556e-002, 4.680262e-002, 4.228269e-002, 7.310047e-004, -1.482379e-003, -6.696225e-003, 1.058136e-002, 5.261980e-002, 5.169290e-002, -2.345971e-004, -2.418009e-002, -2.632455e-002, -1.763020e-002, 4.579281e-003, 8.667036e-005, -2.131854e-003, -2.122471e-002, 1.852477e-002, 6.962853e-002, 5.170343e-002, -8.565178e-003, 5.027055e-002, 1.164998e-002, 7.428687e-003, -2.557454e-002, 1.761563e-002, 6.041060e-002, 3.211255e-002, 2.647123e-002, 4.319184e-002, 2.539034e-002, 1.172919e-002, 2.936087e-003, 1.938845e-003, -1.130458e-002, -3.179587e-002, -4.104291e-002, -3.715453e-002, -1.170777e-002, -7.959596e-003, -4.724917e-003, 1.221544e-002, 2.519439e-002, 1.926477e-002, 2.408464e-002, -1.381436e-002, 2.607523e-002, 2.101740e-002, -3.800964e-003, -1.964829e-002, 4.389859e-002, 5.308644e-002, 4.452410e-002, 4.838643e-002, 9.921009e-003, -4.176481e-002, -6.152620e-002, -5.210534e-002, -2.757626e-002, -2.508860e-002, -2.233241e-002, -1.299558e-002, -3.701065e-003, -1.736069e-002, -4.732663e-002, -5.749729e-002, -2.744622e-002, 6.010757e-003, 4.692268e-002, -6.631895e-002, 2.835248e-002, 3.456554e-002, 3.981190e-002, -1.472878e-002, 1.446333e-002, 4.481586e-002, 3.867032e-002, 4.382294e-002, 5.830939e-002, 3.009197e-002, -2.271353e-002, -4.226911e-002, -2.496256e-002, 5.292704e-003, 3.729103e-002, 4.794543e-002, 3.855560e-002, 2.687926e-002, 4.570522e-003, 1.864524e-003, 2.999268e-002, 6.379847e-002, 1.074206e-001, -4.699275e-002, 1.545344e-002, 3.304781e-003, 4.197494e-002, 2.325373e-003, -1.666299e-002, 3.076068e-003, 1.309759e-002, 1.659966e-002, 3.260600e-002, 2.501934e-002, -2.186200e-002, -5.516996e-002, -5.332320e-002, -1.685186e-002, 1.155461e-002, 2.240069e-002, 1.807803e-002, -4.449848e-003, -2.713731e-002, -2.507178e-002, -1.146819e-002, 3.587965e-002, 9.704199e-002, -1.500015e-002, 5.498678e-003, -4.082598e-002, -1.130108e-002, 6.882120e-003, -1.313216e-002, -2.990949e-002, -8.371113e-003, -9.457098e-003, -2.196254e-002, -7.119050e-003, 5.325416e-003, 3.637552e-003, 1.535577e-002, 2.757979e-002, 3.366496e-002, 3.182893e-002, 2.721559e-002, 2.631285e-003, -3.901180e-002, -7.160729e-002, -9.100981e-002, -4.332884e-002, 3.315133e-002, -2.404009e-002, 7.509508e-003, -6.641555e-002, -4.864791e-002, -1.479613e-002, -3.123732e-003, -2.552584e-002, -1.210948e-002, -6.293769e-003, -3.739043e-002, -2.924623e-002, 2.590044e-002, 6.892438e-002, 7.782302e-002, 5.711949e-002, 2.361548e-002, 1.005443e-002, 3.809748e-002, 4.654478e-002, 1.172177e-002, -5.005464e-002, -8.493087e-002, -5.043745e-002, 5.412406e-003, -5.203733e-002, 3.561790e-003, -3.634286e-002, -1.053654e-002, -4.378955e-002, 9.340826e-003, 2.217759e-002, 1.797771e-002, 3.054034e-002, -5.431832e-003, -2.448326e-002, 1.858949e-002, 6.137811e-002, 5.150224e-002, -4.935184e-003, -6.449065e-002, -7.498422e-002, -9.693683e-003, 4.353094e-002, 4.195154e-002, -1.476623e-003, -3.744953e-002, -2.654529e-002, 1.019347e-002, -1.701064e-002, 7.571746e-002, 5.957068e-002, 4.595714e-002, -1.601977e-002, 1.877215e-002, 5.126480e-002, 4.491302e-002, 5.156957e-002, 2.576972e-002, -1.183008e-002, -7.107096e-003, 1.430761e-002, -4.761419e-003, -7.879413e-002, -1.381692e-001, -1.374633e-001, -7.052627e-002, 8.319624e-003, 5.647573e-002, 4.040903e-002, 1.426149e-002, 1.123976e-002, 2.702782e-002},
{-9.989329e-003, -3.017028e-002, -1.059620e-001, -4.766879e-002, 3.295625e-002, -3.409426e-002, -8.844010e-002, -2.254231e-002, 3.675850e-002, 4.922003e-002, 3.909614e-002, -6.773990e-003, -2.992124e-002, 2.897010e-002, -1.546779e-002, 7.304679e-002, 1.020871e-002, -5.299785e-002, -6.555859e-002, 1.810269e-002, 2.529960e-002, -2.259819e-002, -3.561250e-002, 1.223800e-002, -

© ISO/IEC 2004 — All rights reserved


Copyright International Organization for Standardization
Provided by IHS under license with ISO
No reproduction or networking permitted without license from IHS
Not for Resale

5.633024e-003, -5.574307e-003, -3.492677e-002, -1.079027e-003, 5.570050e-002, -7.894230e-003, -3.953640e-002, -2.498921e-004, 1.846744e-002, 2.508095e-002, 1.736167e-002, -1.186552e-002, 3.671218e-002, 1.082871e-001, 1.745351e-002, 6.052055e-002, -1.173287e-002, -3.638789e-002, 9.029556e-005, 5.404215e-002, 7.415340e-002, -3.563118e-003, -4.129799e-002, -2.829020e-002, -1.346845e-002, -4.966662e-003, 1.552831e-002, 4.385446e-002, 5.075918e-002, 6.637727e-003, -9.083076e-003, 8.565358e-003, 1.907057e-002, 1.835822e-002, 6.831727e-003, -2.990260e-003, 5.968213e-002, 5.248876e-002, -2.517472e-003, 6.473177e-003, -3.939793e-002, -4.383790e-002, 4.936783e-002, 4.792175e-002, 6.025632e-002, 1.492895e-002, -4.283047e-002, -5.076056e-002, -9.209870e-003, -1.307547e-002, 3.008968e-002, 8.042306e-002, 2.527555e-002, -2.478668e-002, -7.177971e-003, 6.242571e-003, 6.513544e-003, 5.419581e-003, -6.403426e-003, -2.076897e-002, 1.049745e-002, -1.994058e-002, -5.549856e-002, -8.960512e-003, -2.942496e-002, -5.124074e-002, 5.891079e-002, 5.138774e-002, -3.125931e-002, -7.966300e-003, -2.824164e-002, -4.490873e-002, 1.359429e-002, -8.358521e-003, 2.895524e-002, 8.651506e-002, 4.609692e-002, -3.268481e-002, -3.326354e-002, -2.196708e-002, -2.775212e-002, -2.369184e-002, -4.745334e-002, -6.805294e-002, -5.963340e-002, -6.562530e-002, -6.478645e-002, 1.925216e-002, 1.690716e-002, -1.725133e-002, 3.957420e-002, 7.931585e-002, -4.476283e-002, -7.306067e-002, -4.217845e-002, -4.806106e-002, 4.052713e-002, -7.209895e-003, 1.635405e-002, 4.210048e-002, 1.171439e-002, 4.337736e-003, 3.915952e-002, 7.150498e-002, 7.990014e-002, 4.577753e-002, -3.234719e-002, -8.110827e-002, -3.988788e-002, -3.604115e-002, -3.986334e-002, 3.589809e-002, 2.655478e-002, -4.653818e-003, 8.041227e-003, 4.841591e-002, -3.609028e-002, -4.848494e-002, 1.063887e-002, 2.310591e-002, 6.845059e-002, 9.150350e-004, -4.610627e-003, -6.277425e-003, -5.358464e-002, -5.948040e-002, -8.787951e-003, 4.487048e-002, 5.368836e-002, 9.775350e-003, -4.369940e-002, -2.890172e-002, 5.668772e-002, 2.093310e-002, -4.345131e-002, 1.215070e-002, -1.669453e-002, -8.453063e-003, 9.261617e-003, -1.584814e-002, -9.707746e-002, -8.159568e-002, 5.247294e-002, 9.784566e-002, 7.195065e-002, 1.360410e-003, 1.482859e-002, -1.296160e-002, -9.370340e-002, -1.211274e-001, -7.730301e-002, -1.741286e-002, 8.487780e-003, 2.354833e-002, -1.121265e-003, -9.616935e-003, 5.603285e-002, -4.033404e-002, -5.867912e-002, 4.082570e-002, 5.045122e-003, 1.697835e-002, 4.763850e-002, -1.222587e-002, -1.003303e-001, -9.192781e-002, 4.801241e-002, 1.014492e-001, 5.400137e-002, 7.645227e-003, 3.893873e-002, 1.243870e-002, -6.869865e-002, -1.083661e-001, -7.945741e-002, -9.577195e-003, 6.331713e-002, 8.031911e-002, -2.548832e-002, -8.196039e-002, -2.109906e-002, -5.109869e-002, 6.065888e-002, 1.139624e-001, -1.733031e-002, -4.658264e-002, 1.506326e-002, 6.957536e-003, -5.559246e-002, -4.867945e-002, 6.409816e-002, 1.343115e-001, 4.171476e-003, -2.444917e-002, 4.964295e-002, 4.190562e-002, -1.762225e-002, -4.369522e-002, -1.831673e-002, 5.953650e-002, 1.241662e-001, 5.706754e-002, -7.655336e-002, -5.837707e-002, 1.745915e-002, -5.059381e-003, 8.015351e-003, 6.017684e-002, 2.517636e-002, 1.532403e-002, -1.513486e-002, -6.441729e-002, -7.231846e-002, -3.771685e-002, 4.541263e-002, 1.275085e-001, -3.362891e-002, -6.885208e-002, 2.890822e-002, 5.515055e-002, 1.881640e-002, 9.793068e-003, 3.011443e-002, 8.995690e-002, 1.088243e-001, -1.086110e-002, -6.328038e-002, 6.127623e-003, 5.247805e-002, -1.856369e-002, -1.031034e-002, 8.935154e-002, 5.565547e-002, -2.131512e-002, -4.267751e-002, -3.563685e-002, -2.051875e-002, -2.056995e-002, -2.041611e-002, 3.784163e-002, 2.914936e-002, -6.680074e-002, -4.905108e-003, 3.261777e-002, 1.509155e-002, 3.022278e-002, 4.797259e-002, 5.771496e-002, 2.977321e-002, -2.948991e-002, -1.204145e-002, 2.309189e-002, 3.094890e-002, 1.643121e-002, 2.182658e-002, 7.094175e-002, -1.605423e-002, -6.926332e-002, -2.082761e-002, 2.701220e-002, 4.828103e-002, 1.115917e-002, -5.797422e-002, -5.885529e-002, 3.562051e-002, -2.530490e-002, -2.932416e-002, -1.163578e-002, -6.855764e-003, 3.489507e-002, 4.524203e-002, -5.278876e-004, -4.360473e-002, -1.436978e-002, 2.990064e-002, 3.431923e-002, 2.585361e-002, -6.601347e-003, -3.379387e-002, -3.915014e-002, -1.290525e-001, -9.710916e-002, -1.638526e-002, 5.716604e-002, 8.614023e-002, 5.092199e-002, -5.132469e-002, -1.050584e-001, -1.709124e-002, 4.058656e-003, -1.564921e-002, -3.653185e-002, -3.659531e-002, 1.325147e-002, 2.194630e-002, -3.885730e-002, -6.186701e-002, 1.322631e-002, 7.349190e-002, 8.629271e-002, 6.153924e-002, 2.012224e-002, -1.273276e-002, -5.174455e-002, -9.219746e-002, -2.236676e-002, 5.027890e-002, 1.198217e-001, 1.364707e-001, 7.597853e-002, -4.850765e-002, -1.097625e-001, -5.048657e-002, 2.660185e-002, 1.550536e-002, -3.344205e-002, -5.491373e-002, -1.834512e-002, 1.612304e-003, -3.324924e-002, -4.077272e-002, 1.483014e-002, 2.279072e-002, -9.020152e-004, -1.290571e-002, -8.556638e-003, -1.975732e-003, -2.685719e-003, 8.142225e-003, 3.040787e-002, 2.618534e-002, 2.497245e-002, 2.740710e-002, -7.376945e-003, -6.902522e-002, -8.954081e-002, -4.728370e-002, 2.037906e-002, 1.940991e-002, -1.406369e-002, -5.025726e-002, -2.744214e-002, 2.893588e-003, -2.327024e-002, -3.477295e-002, 1.786423e-002, 2.576226e-002, -3.173266e-002, -6.908592e-002, -5.821642e-002, -3.164288e-002, 2.395721e-002, 6.203258e-002, 4.300955e-002, 1.195126e-002, -2.701802e-002, -5.445756e-002, -4.909832e-002, -1.473674e-002, -1.507314e-002, -4.963821e-002, -1.180737e-002, -5.098736e-003, 2.748111e-003, -1.946309e-002, -5.084390e-003, 5.469180e-003, -1.213743e-002, -2.470465e-002, 3.280146e-002, 5.909852e-002, 4.106222e-003, -5.854280e-002, -7.314207e-002, -5.241039e-002, -1.516653e-002, -1.082356e-003, -7.489114e-003, 1.792982e-002, 3.183994e-002, 3.193505e-002, 4.354977e-002, 2.867239e-002, -1.148642e-002, -


© ISO/IEC 2004 — All rights reserved

Copyright International Organization for Standardization
Provided by IHS under license with ISO
No reproduction or networking permitted without license from IHS
Not for Resale

1.255801e-002, -2.977207e-002, -9.839008e-003, -3.627852e-003, 1.536432e-003, 2.741583e-002, 1.041793e-002, -7.185298e-003, -1.385677e-002, -8.831579e-003, -6.461783e-003, -2.075193e-002, -3.738526e-002, -2.463445e-002, 2.662237e-003, 1.072558e-002, -8.079934e-005, -1.737574e-002, -2.061116e-002, -3.629398e-003, 2.304105e-002, 3.187433e-002, 4.532875e-003, -3.777588e-002, 2.706447e-002, -2.063084e-002, 6.134941e-003, -3.014342e-003, -2.760027e-002, 3.568920e-002, 3.688702e-002, -1.856287e-002, -1.166999e-002, 1.820048e-003, -7.038144e-004, -1.358567e-002, -2.497689e-002, -9.565246e-003, 8.656694e-003, 1.031950e-002, 5.813691e-003, 5.103975e-003, 9.350861e-003, 2.071089e-002, 1.996896e-002, 1.861834e-002, 4.364828e-003, -2.949530e-002, 2.892974e-002, 7.344250e-003, 1.765104e-002, 3.475399e-002, -5.238613e-002, -9.930003e-004, 6.286680e-002, -1.398759e-002, -2.934212e-002, 1.116325e-002, 2.898630e-002, 6.329151e-003, -1.315381e-002, -9.847886e-003, 6.347930e-004, 1.246704e-002, 1.891678e-002, 2.329700e-002, 1.937636e-002, 2.906268e-002, 2.959257e-002, 1.989006e-002, 6.227368e-003, -2.753972e-002, 9.016621e-003, 3.199418e-002, 3.384689e-002, 6.895544e-002, -1.739361e-002, -4.623966e-002, 5.597728e-002, 2.128380e-002, -4.666481e-002, -3.901181e-003, 3.854653e-002, 4.342148e-002, 1.512593e-002, -1.420183e-002, -1.555927e-002, -5.046678e-003, 1.751350e-003, 4.874136e-003, 2.096016e-003, 9.877359e-003, 2.189536e-002, 2.335933e-002, -9.644498e-004, -2.623492e-002, 1.182023e-002, 2.866128e-002, 4.826977e-003, 5.018063e-002, 4.187717e-002, -5.026290e-002, 1.553805e-002, 4.242205e-002, -2.366400e-002, -3.107333e-002, 2.130158e-002, 6.986993e-002, 5.174889e-002, 1.924583e-002, 1.571798e-002, 2.924666e-002, 3.315043e-002, 1.740037e-002, -3.143786e-003, 8.523253e-003, 2.461116e-002, 1.846455e-002, -4.763153e-003, -1.495056e-002, -1.847791e-002, -1.767033e-002, -2.806395e-002, -3.537985e-003, 3.316049e-002, -2.111212e-002, -2.388989e-002, 1.915936e-002, 1.014908e-002, -2.135887e-002, -1.950000e-002, 2.003390e-002, 3.305509e-002, 5.816644e-003, -7.082170e-003, -7.618049e-004, -9.386029e-003, -3.328703e-002, -3.586399e-002, -6.190333e-003, 1.418399e-002, 8.413815e-003, -5.895610e-004, 1.547793e-002, -3.196447e-002, -1.185629e-002, -2.730005e-002, -3.868266e-002, -4.965775e-003, -1.232997e-002, -1.961382e-002, 8.525544e-003, 3.848043e-002, 2.168928e-002, -8.444751e-003, -1.511277e-002, -1.244848e-002, -2.814450e-002, -4.817152e-002, -6.076056e-002, -7.366451e-002, -8.375197e-002, -6.152323e-002, -1.537466e-002, 9.304821e-003, 1.728376e-002, 2.957608e-002, 7.848425e-002},
{-2.769247e-002, -5.074418e-002, 2.397321e-002, -2.246897e-002, -8.432047e-002, -6.703753e-002, 1.984797e-002, 6.206286e-002, 5.971610e-002, 7.744853e-003, -3.045394e-002, -2.263322e-002, 2.692212e-002, 3.409324e-003, 7.494404e-002, 1.004261e-001, 8.446625e-002, 5.560832e-002, 1.115935e-001, 9.414200e-002, -9.246112e-004, -4.728125e-002, -3.325865e-002, -3.312097e-002, 3.534039e-002, 2.172852e-003, 5.768043e-002, 5.472542e-002, 2.108305e-003, -1.917696e-002, -4.107392e-003, 6.691729e-003, 5.081367e-004, -2.504968e-002, -2.860306e-002, 4.110344e-002, 6.470579e-002, -1.953028e-002, 6.015259e-002, 6.156588e-002, 4.400308e-002, 1.012383e-002, 1.387260e-002, 5.342311e-003, -2.982993e-002, -4.214940e-002, -3.556503e-002, -1.436278e-002, 6.611200e-002, 3.331540e-002, 4.050534e-002, 7.055895e-002, 4.293783e-002, 2.865596e-002, 9.078452e-003, 1.083735e-002, -1.771725e-003, -2.379947e-002, -1.097416e-002, 6.212070e-002, 1.627195e-002, -1.733408e-002, 4.361658e-002, 9.592564e-003, -1.011661e-002, -2.287640e-002, -6.053107e-002, -6.657880e-002, -6.305098e-002, 2.328564e-003, 4.242426e-002, 6.493831e-002, 6.225779e-002, 5.418463e-002, -3.864388e-003, 1.628478e-002, 2.897508e-002, 1.520569e-002, -1.486885e-002, -3.390187e-002, -5.307795e-002, -6.608834e-002, -3.555913e-002, 8.892645e-003, -1.721525e-002, 6.313891e-003, 3.457397e-002, -3.575944e-002, -3.549662e-002, -1.035093e-002, -6.010740e-002, -5.261061e-002, -3.431334e-002, 1.462875e-004, 6.748957e-002, 1.012861e-001, 1.708038e-002, 3.437242e-002, -1.063813e-002, -5.380744e-002, -2.554901e-002, -1.163070e-002, -4.322509e-002, -7.095198e-002, -8.948534e-002, -9.343126e-002, -5.765482e-002, -1.471648e-002, -1.749116e-002, 1.245176e-003, -1.141251e-002, -5.610653e-002, -2.017216e-002, 3.344943e-002, 2.528473e-002, -1.377199e-002, 2.593989e-002, 6.730349e-002, 8.258165e-002, 9.547755e-002, -3.838860e-002, -2.025907e-002, 2.003477e-003, -5.797975e-002, -7.291062e-002, -5.075947e-002, -6.678298e-002, -9.193559e-002, -9.536782e-002, -6.721928e-002, -2.123625e-002, -2.689127e-002, -5.658592e-002, -3.785086e-002, -5.113163e-002, -5.361550e-002, 5.460044e-003, 4.646595e-002, 8.790050e-002, 4.615155e-002, 2.049490e-002, 7.788857e-002, 1.064185e-001, 1.026281e-001, -2.893964e-002, -5.921083e-002, -3.578618e-003, -2.313884e-002, -5.162937e-002, -2.916312e-002, -2.563568e-002, -3.001450e-002, -2.432109e-002, -8.896701e-003, -2.907503e-002, -6.207607e-002, 8.795883e-005, 1.348124e-002, -1.402295e-002, -2.462198e-002, -1.984022e-003, -3.085549e-002, 2.400395e-002, 6.212191e-002, -5.861614e-003, -2.951802e-002, -8.465454e-003, 1.438468e-002, 2.692068e-002, -6.768675e-002, -3.285098e-003, 7.750861e-003, -1.697951e-002, 1.824971e-002, 4.431691e-002, 4.814169e-002, 4.443377e-002, 7.648906e-003, -5.060079e-002, -2.041844e-002, 6.173859e-002, 6.456374e-002, 1.937999e-002, -3.120942e-002, -3.237868e-002, -6.617857e-002, 5.832986e-003, 4.219695e-003, -4.565893e-002, -7.798520e-002, -8.625603e-002, -4.626200e-002, 9.161471e-002, -4.260023e-002, -7.670630e-003, 4.137504e-002, 1.623633e-002, 4.928947e-002, 9.651627e-002, 1.019353e-001, 7.431942e-002, 1.688758e-002, -1.736606e-002, -1.971675e-002, -2.834600e-002, -6.713125e-003, -5.086614e-003, -7.218203e-003, 3.616854e-002, -1.146410e-002, -1.170382e-002, -6.283339e-002, -7.674462e-002, -5.357271e-002, -5.555773e-002, -4.003280e-002,

© ISO/IEC 2004 — All rights reserved


Copyright International Organization for Standardization
Provided by IHS under license with ISO
No reproduction or networking permitted without license from IHS
Not for Resale

9.792939e-002, -1.295693e-002, -1.508836e-002, 4.955606e-002, 2.550783e-002, 3.611420e-002, 9.982980e-002, 1.085136e-001, 8.244928e-002, 5.086662e-002, 3.278878e-002, -1.589418e-002, -2.708316e-002, 4.854400e-002, 5.228537e-002, 1.393468e-002, 6.632434e-002, 2.749468e-003, -5.729204e-002, -6.206817e-002, -1.619498e-002, 2.201293e-002, -8.704206e-003, -2.453831e-002, 1.713453e-002, -1.823479e-002, -1.986381e-002, 3.193305e-002, 1.427328e-002, -1.107048e-003, 4.753219e-002, 7.226762e-002, 5.185097e-002, 4.822187e-002, 5.982580e-002, 4.826556e-002, 3.389518e-002, 2.663055e-002, -1.957601e-002, -3.362195e-002, 6.038427e-002, -1.173885e-002, -9.115619e-002, -3.969886e-002, 3.310347e-002, 6.048590e-002, 2.370221e-002, 5.599087e-004, -2.858219e-002, -2.008090e-002, -1.562517e-002, 5.016989e-003, 8.450822e-003, -2.717168e-002, -1.428079e-002, 1.939794e-002, -2.669986e-003, -2.138439e-002, -1.548829e-003, 1.668950e-002, 4.496164e-003, -3.251353e-002, -8.082193e-002, -7.181363e-002, 6.281068e-002, 1.497674e-002, -2.003268e-002, 1.122209e-002, 2.675290e-002, 2.483648e-002, 3.182355e-003, -1.618498e-002, -2.706296e-002, -1.232650e-002, 1.094364e-002, -2.248365e-002, -1.599159e-002, -4.618765e-002, -6.565976e-002, -4.083311e-002, -7.103304e-002, -1.064537e-001, -8.024759e-002, -4.095272e-002, -2.809030e-002, -1.587605e-002, -2.863139e-002, -2.526318e-003, 7.053711e-002, 3.638607e-002, 1.451390e-002, -3.377770e-003, -3.078622e-003, -4.854970e-003, -2.335612e-002, -5.591449e-002, -3.284103e-002, -4.258003e-004, 1.748622e-002, -2.589784e-002, -3.420177e-002, -4.981814e-002, -7.437396e-002, -5.521346e-002, -6.427006e-002, -6.918866e-002, -1.461982e-002, 2.972818e-002, 2.898402e-002, 1.552450e-002, -3.986586e-003, 2.772160e-002, 1.833319e-002, -2.385033e-002, -3.769120e-002, -5.892193e-002, -3.935770e-002, 7.968925e-003, 2.874055e-002, 5.699168e-004, -4.118009e-002, 8.429916e-003, 1.449566e-002, -4.885811e-003, -4.823131e-002, -4.642494e-002, -4.953118e-002, -1.834733e-002, 8.592653e-004, 1.205681e-003, -2.778537e-003, -1.208604e-002, -6.312716e-003, 2.448007e-002, 4.532313e-002, 6.090301e-002, 2.662246e-002, -5.790717e-003, -3.104402e-002, -6.227541e-002, -5.007848e-002, 1.128517e-002, 7.720618e-002, 6.275825e-002, -7.292318e-002, 1.296306e-002, -1.509592e-002, 7.803316e-003, -5.282739e-002, -3.954489e-002, 4.640915e-004, 4.420625e-002, 5.525229e-002, 3.641773e-002, 2.338215e-002, 3.374063e-002, 3.362995e-002, 3.330856e-002, 1.815287e-002, -6.218172e-003, -1.621803e-002, -2.711750e-002, -3.767514e-002, -2.134995e-002, 1.239909e-002, 6.021755e-002, 8.038045e-002, 6.372820e-002, -6.588371e-002, 9.527544e-003, -3.728370e-002, 8.119718e-004, -5.157682e-002, -5.350516e-002, 3.018923e-002, 7.596482e-002, 6.589187e-002, 4.040023e-002, 3.559301e-002, 4.084478e-002, 2.786878e-002, 2.077984e-002, 1.142306e-002, -1.447101e-002, -1.728621e-002, -2.351701e-002, -3.716111e-002, -2.951793e-002, -1.384947e-002, 1.028796e-002, 2.996550e-002, 6.490530e-002, -3.914269e-003, -9.384053e-003, -3.580203e-002, -2.668787e-002, -3.351007e-002, -6.632926e-002, 1.472928e-002, 6.874845e-002, 5.504763e-002, 2.643164e-002, 4.499397e-002, 4.224762e-002, 1.629529e-002, 1.563080e-003, -2.257817e-002, -3.575964e-002, -4.257160e-002, -3.553839e-002, -2.330542e-002, -1.374232e-002, -1.093173e-002, -8.467948e-003, 1.872614e-002, 8.000733e-002, 5.332814e-002, -3.412902e-002, -4.403625e-003, -8.665599e-003, 3.778867e-003, -3.305064e-002, 3.263349e-003, 7.478395e-002, 5.681414e-002, 2.420234e-002, 2.921451e-002, 1.822202e-002, -2.773864e-003, -2.034540e-002, -2.500879e-002, -1.151711e-002, -8.442957e-003, -6.471506e-003, -1.460010e-002, -1.717690e-002, -2.225491e-002, -2.714175e-002, 1.791502e-002, 9.139769e-002, 5.650005e-002, -4.676363e-002, 4.450087e-002, 3.216685e-002, 3.036326e-002, 2.203194e-002, 1.852824e-002, 6.236391e-002, 4.090949e-002, -1.872499e-003, -5.659626e-003, 4.167227e-004, -3.466191e-002, -6.639101e-002, -7.320668e-002, -5.109680e-002, -2.279735e-002, 2.496033e-003, 1.626563e-003, -1.967670e-002, -4.253604e-002, -5.124926e-002, 1.296247e-003, 8.231588e-002, 3.143702e-002, -1.630080e-002, 6.964004e-002, 2.950793e-002, -4.619812e-003, 5.023467e-002, 3.401016e-002, 2.838596e-002, 5.976177e-003, -2.564949e-002, -3.169539e-002, -1.306858e-002, -2.063654e-002, -3.033374e-002, -3.122856e-002, -1.276301e-002, 1.551261e-002, 3.192156e-002, 2.530732e-002, -4.743303e-003, -3.522172e-002, -4.941584e-002, -1.605781e-002, 4.295003e-002, 4.279602e-002, 2.122718e-002, 6.284075e-002, -7.223415e-003, -4.286192e-002, 5.107515e-002, 2.499333e-002, 8.048352e-003, -1.372395e-002, -4.947682e-002, -6.334382e-002, -3.058222e-002, -4.971599e-004, 5.650999e-003, -6.782605e-003, -6.576718e-003, 7.213648e-003, 2.317491e-002, 2.561095e-002, 2.155650e-003, -2.377836e-002, -4.847581e-002, -3.645282e-002, 6.772422e-003, 5.019471e-002, -5.229994e-003, -1.179627e-002, -1.857348e-002, -3.971262e-002, 4.660666e-002, 3.994086e-003, 6.049007e-004, 1.760231e-002, -2.198148e-002, -6.207824e-002, -4.811324e-002, 8.835297e-003, 3.900549e-002, 2.494021e-002, 1.169583e-003, 2.368803e-003, 1.136732e-002, 6.746819e-003, -2.317916e-003, -1.918446e-002, -5.090204e-002, -5.841898e-002, -7.133124e-003, -4.149211e-004, -7.959129e-002, -6.652119e-002, 1.793921e-003, -1.176873e-002, 5.119258e-002, -5.932636e-003, -8.817920e-003, 4.807847e-002, 2.959794e-002, -1.680991e-002, -2.581606e-002, 1.962828e-002, 6.058585e-002, 6.087316e-002, 3.919676e-002, 1.897362e-002, 1.270478e-002, 6.961086e-003, 5.017340e-003, -1.603546e-002, -3.479428e-002, -3.179266e-002, 2.852515e-002},
{1.026645e-002, -2.848862e-002, 2.404605e-002, -8.319652e-003, 3.462652e-003, 3.579204e-002, -3.794341e-002, -1.120169e-001, -3.951449e-002, 1.704941e-002, 1.166152e-002, 4.269522e-002, -4.407443e-002, -1.130076e-001, 5.194807e-002, -8.182040e-002, -1.134040e-001, -4.566681e-003, -2.675013e-002, -5.592989e-002, -7.767557e-003, 2.596894e-002, -1.546363e-002, -1.299919e-002,


© ISO/IEC 2004 — All rights reserved

Copyright International Organization for Standardization
Provided by IHS under license with ISO
No reproduction or networking permitted without license from IHS
Not for Resale

6.907683e-003, -5.614546e-003, 5.491035e-002, 3.116436e-002, 4.931330e-002, 6.862566e-002, 9.629794e-003, -3.360868e-002, -1.131360e-002, 4.617658e-002, 8.410499e-002, 7.149938e-002, -1.766244e-002, 1.057318e-002, 8.144543e-002, -9.767916e-002, -8.286059e-002, 2.990771e-002, 4.762732e-002, -1.596858e-002, 1.224686e-002, 3.473906e-002, 1.194548e-002, -2.391156e-002, 9.050056e-003, 7.618218e-003, 6.246982e-002, 3.735630e-002, 7.156350e-002, 7.067630e-002, 1.438296e-002, -2.465368e-002, -3.163511e-003, 4.226019e-002, 6.699827e-002, 2.787719e-002, -4.844865e-003, 1.133980e-001, 4.763759e-002, -6.703792e-002, -4.444209e-002, 5.342875e-002, 7.507713e-002, 2.152361e-002, 1.870948e-002, 4.009815e-003, -3.657271e-002, -7.295153e-002, 2.106137e-002, -3.742618e-003, 4.723974e-002, 1.966083e-002, 3.365728e-002, 3.088663e-002, -1.850210e-002, -5.423186e-002, -3.701938e-002, -5.186714e-003, 8.545463e-003, 1.660782e-003, 3.204366e-002, 8.365944e-002, 6.781134e-003, -2.806052e-002, -2.725599e-002, 4.716225e-002, 4.730263e-002, 8.364620e-003, 1.481222e-002, 4.835638e-003, -4.995742e-002, -9.893995e-002, 4.470566e-002, -2.187264e-002, 1.520868e-002, -1.150461e-002, -3.817178e-003, -1.747051e-002, -8.106081e-002, -9.838001e-002, -7.869404e-002, -3.522987e-002, -5.811741e-003, -2.618886e-003, -4.738219e-003, -6.845015e-003, 1.604366e-002, 6.368806e-003, -1.010197e-002, 3.064367e-002, 1.970775e-002, -3.560908e-002, -3.325228e-002, 3.888931e-002, 2.508366e-002, -4.603387e-002, 5.238330e-002, -2.536402e-002, -1.758775e-002, -3.447157e-002, -1.199924e-002, -2.607535e-002, -6.976665e-002, -6.266234e-002, -1.636836e-002, 2.577843e-002, 1.774090e-002, -4.022715e-002, -6.377475e-002, 7.107626e-003, 5.492052e-002, 3.931587e-002, 2.929952e-003, 2.972258e-004, 9.310748e-003, -1.641337e-002, -1.296024e-001, -4.557921e-002, 7.489661e-002, 6.639569e-002, 3.747204e-003, -2.911515e-002, -2.448900e-002, -4.999806e-002, -2.495638e-002, -1.267413e-002, -2.877826e-002, -6.954337e-003, 3.360584e-002, 4.204723e-002, -1.706040e-002, -7.646073e-002, -3.342627e-002, 5.127726e-002, 5.357932e-002, 3.427624e-002, -1.095882e-003, -3.056540e-002, -4.783376e-002, 4.576365e-002, -4.750124e-002, -1.223414e-001, 1.762070e-002, 7.102706e-002, -4.246266e-002, -3.168190e-002, -1.397224e-002, -2.712647e-002, -7.908567e-003, 8.788069e-003, 5.079847e-003, 1.930109e-002, 4.207198e-002, 1.948610e-002, -1.674205e-002, -1.156546e-002, -3.517437e-002, -1.233722e-002, 1.488576e-002, 2.110130e-002, 8.787966e-003, -1.447772e-002, -9.635867e-002, 2.054220e-002, 9.875900e-002, -3.303793e-002, 1.285176e-002, 9.044700e-002, -7.273817e-002, -1.978704e-002, -2.195788e-003, -4.514838e-003, 1.382454e-002, 3.963194e-002, 4.288378e-002, 3.926525e-002, 1.853659e-002, -1.135392e-002, 5.742938e-003, 4.708597e-002, -3.068378e-002, -2.705860e-002, 4.681409e-002, 3.041308e-002, -4.659112e-002, -1.921277e-002, 3.509766e-002, 2.175787e-002, 6.001320e-002, 2.146354e-002, 3.721903e-002, 9.428352e-002, -7.451523e-002, 1.056899e-002, 1.064876e-002, 1.570685e-002, 2.619906e-002, 6.064564e-002, 5.674636e-002, 2.334934e-002, -2.608132e-002, -4.461464e-002, 1.273366e-002, 6.958903e-002, 2.695785e-002, -1.607236e-002, -3.854791e-002, -3.673903e-003, -2.927761e-002, 2.183129e-002, 8.362704e-002, -3.971813e-003, -5.092209e-002, -3.039703e-002, 2.241049e-002, 6.325089e-002, -1.852338e-002, 4.336576e-002, 2.422606e-002, 1.211721e-002, 1.925038e-002, 4.417762e-002, 4.224168e-002, -1.098333e-002, -5.908891e-002, -5.551866e-002, -7.520529e-003, 2.313933e-002, 4.431374e-002, 2.370420e-002, -4.434964e-002, -1.857421e-002, -1.377047e-002, 4.724547e-002, 9.398461e-002, -5.307649e-003, -7.594341e-002, -7.425553e-002, -3.544549e-002, 6.003107e-003, 8.292494e-003, 5.505049e-002, 2.039425e-002, -2.994007e-003, 4.213732e-003, 1.908086e-002, 2.578164e-002, -2.659967e-002, -5.448090e-002, -3.436535e-002, -3.521944e-003, -9.931918e-003, -2.899638e-003, 6.476182e-004, -1.149006e-002, 2.680349e-002, 1.260712e-002, 2.242689e-002, 3.680307e-002, 1.821792e-002, -1.876310e-002, -5.478413e-002, -7.082948e-002, -4.585951e-002, 2.612160e-002, 2.499429e-002, 5.904492e-003, -7.662152e-003, -1.843255e-002, -1.887003e-002, 1.202980e-003, -1.439770e-002, -1.613014e-003, 3.670831e-002, 4.699371e-002, -8.563387e-003, -4.452814e-002, -3.281982e-002, -1.055788e-002, 4.537674e-002, 5.067574e-002, 7.386229e-004, -6.512754e-002, -4.669443e-002, 5.937134e-003, 3.208651e-002, -3.882282e-004, -4.676732e-002, 2.805691e-002, -1.586334e-002, -1.519094e-002, -2.148205e-003, -3.000614e-002, -5.107856e-002, -3.102289e-002, -4.656828e-003, 4.742018e-002, 1.252283e-001, 1.205012e-001, -4.716774e-003, -9.138562e-002, -7.232110e-002, 1.078992e-002, 9.987994e-002, 1.249923e-001, 4.779368e-002, -6.048755e-002, -1.035096e-001, -6.822591e-002, 9.851026e-003, 1.748591e-002, -4.628736e-002, 1.356772e-002, -4.397663e-002, -3.236873e-002, 3.787866e-003, -2.593158e-002, -6.003756e-002, -5.938463e-002, -2.819118e-002, 1.944322e-002, 1.084320e-001, 1.185987e-001, -3.444025e-002, -1.353802e-001, -1.093945e-001, -1.145610e-002, 7.288534e-002, 1.054118e-001, 6.452161e-002, -2.295664e-002, -8.506165e-002, -6.508835e-002, 2.437523e-002, 4.358916e-002, -5.436715e-002, 2.874721e-003, -2.146548e-002, -3.714261e-002, 1.951267e-002, -1.374250e-002, -3.124100e-002, -5.021192e-002, -5.104416e-002, -4.628577e-002, 1.700084e-002, 3.748420e-002, -2.793573e-002, -6.813086e-002, -4.898602e-002, -4.213920e-003, 4.626853e-002, 5.312983e-002, 2.388703e-002, -1.726515e-002, -5.041327e-002, -5.055685e-002, 1.234467e-002, 6.466207e-002, 2.687039e-003, -1.342073e-002, 2.055574e-002, -1.336708e-002, 3.031711e-002, 1.284159e-002, 7.053465e-003, -7.315217e-004, -5.154205e-003, -1.878693e-002, -1.780504e-002, -2.187797e-002, -3.705938e-002, -6.351497e-002, -7.028490e-002, -4.921481e-002, -2.284904e-002, 6.227221e-003, 2.796537e-002, 5.617354e-002, 6.320549e-002, 4.509185e-002, 3.877862e-002, 3.351592e-002, 8.286091e-003, -

© ISO/IEC 2004 — All rights reserved


Copyright International Organization for Standardization
Provided by IHS under license with ISO
No reproduction or networking permitted without license from IHS
Not for Resale

2.502945e-002, 3.034381e-002, 1.390867e-002, 1.102240e-002, 1.984075e-002, 3.009075e-002, 5.242419e-002, 5.938595e-002, 2.078376e-002, -3.088507e-002, -1.999666e-002, 2.469866e-002, 3.245761e-002, 6.597670e-003, -1.366055e-002, -2.000770e-002, -2.128421e-003, 1.589420e-002, 3.928899e-002, 4.574610e-002, 3.997251e-002, 1.496572e-002, -8.705195e-003, -1.626253e-002, -3.072411e-002, 1.830081e-002, 1.496744e-002, -1.101701e-002, 1.470885e-003, 1.642282e-002, 4.694517e-002, 7.234238e-002, 2.574371e-002, -4.561654e-002, -6.189208e-002, 4.841547e-003, 4.062682e-002, 3.489772e-002, 1.888428e-002, 1.215445e-002, -8.527355e-003, -1.684709e-002, -1.827667e-002, -7.172409e-003, 8.363840e-003, 1.065403e-002, -4.772758e-003, -2.269235e-002, -2.476071e-002, 1.560771e-002, -5.945154e-003, -4.734228e-002, -1.264910e-002, -1.354706e-002, -2.048491e-003, 2.337744e-002, 7.472732e-003, -3.537425e-002, -6.364288e-002, -3.194619e-002, 2.736971e-002, 3.199780e-002, 2.382691e-003, -2.462385e-002, -5.783859e-002, -7.477095e-002, -5.788033e-002, -7.098065e-003, 2.684336e-002, 3.739603e-002, 1.962765e-002, -3.638489e-003, -1.612726e-003, 3.982081e-002, -2.631714e-002, -5.663860e-002, 3.569215e-002, 2.531048e-003, -2.825918e-002, -2.842089e-002, 8.518997e-003, 1.868248e-002, -9.534319e-003, -2.078081e-002, 2.737837e-002, 6.006727e-002, 4.602615e-002, 1.766832e-002, -2.222849e-002, -5.412054e-002, -4.657950e-002, -7.368628e-003, 2.271699e-002, 4.035250e-002, 3.377484e-002, 3.976617e-003, 1.614228e-003, 5.364058e-002, -3.494245e-002, -4.132864e-002, 6.765097e-002, 3.987454e-002, -1.591017e-002, -5.447354e-002, 1.214567e-003, 5.606921e-002, 3.004031e-002, -1.280646e-002, 1.592251e-003, 2.556898e-002, 2.556909e-002, 1.285863e-002, -1.229367e-002, -4.609628e-002, -5.080542e-002, -3.724272e-002, -2.293779e-002, 2.080546e-003, 1.797829e-002, 6.424429e-003, -1.757572e-002, 5.747045e-002, 7.829438e-003, -1.847995e-003, 4.339943e-002, -9.677574e-003, 9.769680e-004, -3.110948e-002, -2.000241e-002, 2.866733e-002, 1.904973e-002, -2.268193e-002, -3.707111e-002, -1.573654e-002, 6.375728e-003, 2.185719e-002, 2.524372e-002, 1.024016e-002, -9.253028e-003, -2.489451e-002, -3.339899e-002, -9.647635e-003, 1.380102e-002, 1.046110e-002, -3.889658e-002, 5.963795e-002, 2.676414e-002, -5.986002e-003, -8.741341e-003, -6.279983e-002, -1.636633e-002, 8.952334e-003, 3.220364e-003, 2.150351e-003, -2.016563e-002, -3.850536e-002, -5.466079e-002, -3.395032e-002, -5.243364e-003, 3.310233e-002, 6.766357e-002, 6.611871e-002, 4.509651e-002, 1.141011e-002, -1.370198e-002, -2.234802e-003, 1.852044e-002, 1.120057e-002},
{9.001373e-002, 9.709230e-002, 8.165992e-002, 5.274996e-002, 2.263100e-002, -4.364536e-002, -8.456724e-002, -4.621578e-002, 2.394388e-002, -1.798823e-002, -9.117329e-002, -1.184069e-001, -8.939493e-002, -1.246104e-002, -6.512510e-002, -3.377290e-002, -5.460880e-002, -4.757470e-002, -8.162356e-002, 1.461739e-002, 7.360811e-002, -1.217890e-002, -4.928063e-002, 2.342780e-002, -1.612086e-002, -2.287666e-002, 2.256198e-002, -1.322829e-002, -5.805908e-003, -1.696175e-002, 3.139369e-003, 7.851305e-002, 1.098423e-001, 6.174423e-002, 1.650825e-004, -1.611146e-002, 3.328254e-002, 3.170783e-002, 3.419493e-002, 4.783012e-002, 2.653012e-002, 8.906526e-003, -5.390546e-002, -1.249676e-002, 1.125900e-001, 6.989693e-002, 3.896229e-002, 5.819449e-002, -9.024653e-002, -9.621555e-002, -1.949305e-002, -3.308191e-002, -1.650947e-002, -3.026091e-002, -4.371740e-002, -1.939199e-002, -1.786618e-003, -1.975564e-002, -9.605596e-003, 5.211214e-002, 7.311585e-002, 4.488131e-002, 9.367560e-002, 4.809260e-002, 1.691576e-002, 3.115952e-002, -7.956881e-003, -4.302761e-002, 3.130761e-002, 3.661986e-002, -1.249313e-002, -2.392604e-002, -7.479346e-002, -8.984224e-002, -3.226970e-002, -2.230629e-002, 8.972742e-003, -1.231817e-002, -5.813605e-002, -6.632397e-002, -5.266243e-002, -2.582709e-002, 2.444483e-002, 4.908836e-002, 2.630173e-002, 3.488072e-002, 7.486003e-002, -1.368812e-002, -5.312261e-002, 3.348818e-003, 1.096403e-002, -1.106271e-002, -2.316355e-002, -3.417417e-003, -4.565437e-002, -7.668223e-002, -1.612626e-002, -1.427228e-002, 7.304480e-003, -1.508360e-002, 3.345461e-002, 3.078207e-002, -2.997456e-003, -1.710809e-002, -9.811925e-003, 7.308630e-003, -3.878152e-005, -4.366383e-002, -5.299026e-002, -3.797973e-003, -1.059299e-002, -6.390197e-002, -7.048588e-002, -1.900759e-002, 9.075129e-003, -3.284241e-003, 2.188318e-002, 3.453714e-002, -1.950350e-002, -6.830942e-002, 4.244320e-002, 4.854791e-002, 5.170733e-002, 7.343067e-004, 1.969209e-002, 4.386828e-002, 3.469411e-002, 2.743292e-002, 2.427673e-002, -6.171991e-003, -6.188186e-002, -9.237557e-002, -5.201914e-002, -2.713918e-002, -6.558966e-002, -2.412277e-002, 2.653956e-002, 4.583129e-002, 6.948702e-002, 3.454249e-002, -7.942201e-004, 5.153684e-002, 5.832012e-002, 2.489087e-002, 7.675295e-002, 7.571373e-002, 6.122420e-002, 4.061286e-003, 3.027789e-003, 2.997869e-002, 3.586466e-002, 3.996268e-002, 2.624857e-002, -1.315989e-002, -3.954710e-002, -1.516902e-002, 3.275825e-002, 4.123736e-002, -2.639231e-002, 3.844081e-002, 1.406274e-001, 1.177799e-001, 1.031799e-001, 1.155696e-001, -2.470820e-003, -4.243387e-002, -9.104137e-003, 2.935520e-003, 5.482524e-002, 7.181460e-002, 3.845978e-002, -1.281884e-002, -2.848627e-002, -1.421450e-003, 1.055338e-002, 1.759826e-002, 7.889221e-003, 1.045378e-002, 2.695471e-002, 3.136560e-002, 5.764483e-002, 5.630241e-002, -1.087011e-001, -8.612320e-002, 1.719257e-002, -5.091751e-003, -3.245762e-002, 6.975740e-002, 2.527329e-003, -8.745195e-002, -7.741557e-002, -5.618906e-002, 1.924175e-002, 3.746252e-002, 5.133099e-003, -3.221041e-002, -4.211903e-002, -2.310250e-002, -8.970074e-003, 2.885194e-003, 1.683472e-002, 5.350622e-002, 6.214244e-002, -8.291000e-003, 1.607620e-002, 1.059251e-001, -1.991314e-002, -9.206500e-002, -3.530275e-002, -5.707582e-003, -3.712075e-002, -2.607365e-002, -3.869012e-003, -1.872678e-002, -4.431665e-002, -6.556582e-002, -


© ISO/IEC 2004 — All rights reserved

Copyright International Organization for Standardization
Provided by IHS under license with ISO
No reproduction or networking permitted without license from IHS
Not for Resale

4.434340e-002, 9.052455e-003, -3.751046e-002, -4.823004e-002, -4.188209e-002, -9.875956e-003, 7.386061e-003, 1.851400e-002, 4.112022e-002, 6.356720e-002, 4.201127e-002, -2.164568e-002, -3.959330e-002, 6.292493e-002, 3.306906e-002, -3.266787e-002, 6.104505e-003, 2.781714e-003, -6.085151e-002, -9.272956e-002, -3.010259e-003, 6.579221e-002, 2.159402e-002, -4.243541e-002, -1.074745e-001, -9.776318e-003, -5.133809e-002, -5.314105e-002, -3.149836e-002, 1.725621e-002, 1.221592e-002, 3.699395e-003, 9.995236e-003, 1.397534e-002, 3.406829e-002, 2.591218e-002, 1.735497e-002, 3.444560e-002, 5.366321e-003, 3.355254e-002, 1.103738e-001, 4.038941e-002, -6.319122e-002, -5.621368e-002, 3.958987e-002, 9.625016e-002, 2.067200e-002, -4.966661e-002, -1.172935e-001, 2.752949e-003, -3.620967e-002, -3.675103e-002, -1.615509e-002, 4.195869e-002, 2.205058e-002, -2.155525e-002, -4.286620e-002, -2.513841e-002, 4.683327e-003, 6.649153e-003, -2.687552e-003, -1.187999e-002, -3.521073e-002, 2.279398e-002, 1.196138e-001, 4.391242e-002, -3.959181e-002, -3.308937e-002, 3.967679e-002, 8.523129e-002, 9.528733e-003, -9.728606e-002, -5.257960e-002, 2.232827e-002, -1.271500e-002, -2.387094e-002, -1.129444e-002, 4.995241e-002, 3.183657e-002, -5.147770e-002, -8.844549e-002, -5.267810e-002, -2.420104e-002, -5.179815e-003, -2.548125e-003, -1.518660e-002, -5.094192e-002, -2.692863e-002, 2.481142e-002, -1.637938e-002, -6.451980e-002, -6.120429e-002, 2.541334e-003, 7.227528e-002, 2.427315e-002, -1.096044e-001, 3.775069e-002, 3.594237e-002, 5.017088e-003, -1.174368e-002, -1.150552e-003, 4.008963e-002, 3.338186e-002, -5.459154e-002, -7.158232e-002, -3.310469e-002, 2.360398e-002, 7.249906e-002, 7.462324e-002, 3.205354e-002, -2.773721e-002, -5.144263e-002, -4.579332e-002, -2.592159e-002, -3.277279e-002, -2.160528e-002, 2.745787e-002, 1.010467e-001, 8.564745e-002, -4.755983e-002, 9.493670e-002, 2.803582e-002, 1.541802e-002, -6.050161e-003, 5.348740e-004, 2.263588e-002, 2.678155e-002, -2.100435e-002, -1.546371e-002, -9.691727e-003, -3.807031e-002, -1.723089e-002, 9.593514e-004, -1.916019e-003, -3.871943e-002, -6.196271e-002, -4.085124e-002, 1.791203e-002, 1.903948e-002, 9.577173e-003, 1.113477e-002, 2.073128e-002, 4.858806e-002, 2.300151e-002, 8.344967e-002, -3.218097e-004, 1.297675e-002, -2.671943e-003, 1.049252e-002, 1.126824e-003, -1.164014e-003, -1.452266e-002, -1.361263e-002, -1.929768e-002, -3.143228e-002, -2.673588e-002, -1.009768e-002, 6.705779e-003, -2.978835e-003, -1.474280e-003, 2.102592e-002, 4.390449e-002, 2.723802e-002, -1.460914e-002, -3.897602e-002, -5.691324e-002, 5.258372e-003, 7.236657e-002, 1.890010e-002, -2.883407e-002, -2.178065e-003, -2.953717e-003, 2.019358e-002, -1.460884e-002, -4.290575e-002, -2.468981e-002, -4.160128e-003, 1.162253e-002, 2.293526e-002, 4.665464e-003, -2.228918e-002, -2.599914e-002, -1.715167e-002, 4.169379e-003, 2.558075e-002, 4.070916e-002, 2.998092e-002, -1.488008e-002, -5.198782e-002, -4.434892e-002, 3.166637e-002, 9.611835e-002, -2.888350e-002, -4.503157e-002, 1.133815e-002, 8.888036e-003, 4.287476e-002, -6.887030e-003, -5.929487e-002, -1.957948e-002, 1.260631e-002, -3.179425e-002, -5.164522e-002, -3.013022e-002, -6.535991e-003, 1.583746e-002, 4.310711e-002, 6.511159e-002, 6.735775e-002, 5.801185e-002, 3.151709e-002, -1.644212e-002, -5.322250e-002, -7.381305e-002, -3.144945e-002, 4.348856e-002, -4.741916e-002, -4.651000e-002, 4.313196e-002, 1.066222e-002, 5.131192e-002, 3.139922e-002, -1.614634e-002, 1.117395e-002, 4.092249e-002, -4.843550e-003, -2.012344e-002, -7.051960e-004, 2.347891e-002, 2.774851e-002, 2.220933e-002, 8.704691e-003, -1.233336e-002, -2.317365e-002, -2.700465e-002, -2.884024e-002, -3.352388e-002, -3.375799e-002, -2.305342e-002, -3.601241e-003, -1.626579e-002, -2.182985e-002, 3.972186e-002, 2.698090e-003, 3.459561e-002, 5.270349e-002, 1.760486e-002, 2.821454e-002, 5.355617e-002, 7.572104e-003, -3.799040e-002, -2.193736e-002, 1.192780e-002, 2.760853e-002, 3.386252e-002, 3.335444e-002, 2.350897e-002, 2.354559e-002, 1.321658e-002, 9.450674e-003, -5.700955e-003, -1.968752e-002, -1.883595e-002, -1.770719e-002, 1.452785e-002, -9.131526e-003, -1.713174e-002, -2.274452e-002, 8.701403e-003, 4.552170e-003, 6.509067e-003, 2.799756e-002, 4.397686e-002, 1.287974e-004, -4.279138e-002, -5.394647e-002, -4.112095e-002, -2.864975e-002, -1.254536e-002, -1.324174e-002, -1.087610e-002, -6.628345e-004, 5.538942e-003, -6.413859e-003, -1.569880e-002, -7.272690e-003, -7.936537e-003, -1.547097e-002, 5.331012e-002, 2.849810e-002, -3.313020e-002, -2.061750e-002, -8.463337e-003, -1.960950e-002, -2.620311e-002, 2.790215e-002, 4.333086e-002, 1.162257e-003, -1.710493e-002, -5.209189e-003, 6.289286e-003, 5.789333e-003, -4.158440e-003, -1.621571e-002, -1.788368e-002, -5.473664e-003, 8.463890e-004, 1.687501e-003, 4.990947e-003, 2.816553e-003, -5.632272e-003, 1.277690e-003, 3.918064e-002, 1.636032e-002, -2.882975e-002, 9.456890e-003, -1.111172e-002, -1.243569e-002, -3.949955e-002, 1.002555e-003, 4.078919e-002, 5.591845e-003, -6.197716e-003, 2.423670e-002, 6.142109e-002, 5.662843e-002, 1.824841e-002, -1.226015e-002, -2.814901e-002, -2.076931e-002, -3.126713e-003, 9.487507e-003, 1.620881e-002, 1.019413e-002, 7.281609e-003, 4.080727e-002, -5.674948e-002, -3.289736e-002, -1.023125e-002, 2.831807e-002, -1.001844e-002, -1.875285e-002, -4.892103e-002, -2.643984e-002, 1.727618e-003, -2.297221e-002, -1.394727e-002, 4.976242e-003, 3.891466e-002, 4.669946e-002, -3.629632e-003, -3.829909e-002, -5.068427e-002, -5.352083e-002, -3.271499e-002, -1.294980e-002, -1.394180e-003, 1.410527e-002, 3.108301e-002, 5.882277e-002},
{1.936088e-002, -1.717960e-004, 7.986801e-002, 7.759920e-002, 5.401786e-002, 3.492361e-002, -1.062907e-002, -1.019893e-001, -1.810644e-001, -1.153518e-001, 3.743106e-003, 7.546664e-002, 1.266850e-001, 1.110393e-001, 7.171624e-004, -4.964888e-002, -2.811060e-005, -3.600260e-002, 9.483987e-002, 9.012930e-002, -2.504149e-002, -1.876974e-002, -3.587890e-002, -1.125090e-001, -

© ISO/IEC 2004 — All rights reserved


Copyright International Organization for Standardization
Provided by IHS under license with ISO
No reproduction or networking permitted without license from IHS
Not for Resale

5.766779e-003, -1.757495e-002, 2.928909e-002, 2.578302e-003, -3.978500e-002, 2.043611e-004, 4.937295e-002, 3.765884e-002, 1.342103e-002, 2.497442e-003, -7.579461e-003, -5.469617e-003, 4.513202e-002, 3.015781e-002, -2.283422e-002, -4.431057e-003, 4.706569e-002, -4.144711e-002, -4.225009e-002, 5.784834e-002, -8.041817e-002, -1.215539e-002, 7.995481e-002, 9.968955e-002, -1.063679e-002, -5.959390e-003, 1.617644e-002, -2.291471e-002, -6.665766e-002, -7.288884e-003, 5.692705e-002, 4.379981e-002, 4.314300e-003, -5.074385e-002, -9.980757e-002, -8.099419e-002, -1.842656e-002, -1.376018e-002, -3.510056e-003, 4.441427e-002, 8.253724e-002, -1.313660e-002, -1.156485e-001, 4.099811e-002, -5.463805e-002, -6.698562e-002, 3.992373e-002, 1.043195e-001, 4.748949e-003, -1.778423e-003, 1.644993e-002, -2.566641e-002, -1.809860e-002, 4.758721e-002, 9.073844e-002, 4.978946e-002, -1.947633e-002, -8.788763e-002, -1.250462e-001, -7.708710e-002, -2.035081e-002, -3.887383e-003, 1.846175e-002, 5.829049e-002, 9.061864e-002, 3.529818e-002, -1.048194e-001, -2.172620e-002, 3.662360e-002, -5.108925e-002, -1.210033e-002, 7.253484e-002, -5.858265e-004, 1.102450e-002, -1.936916e-002, -4.221581e-002, 1.253032e-003, 1.049445e-001, 1.441139e-001, 8.241056e-002, 4.616252e-003, -6.346454e-002, -6.971313e-002, -1.083478e-002, 4.297785e-003, -2.445421e-003, -3.801310e-005, 2.382527e-002, 4.923053e-002, 5.339773e-002, -2.242652e-002, -9.204923e-002, 4.774524e-002, 2.038591e-002, -1.126013e-002, 2.918982e-002, -3.192780e-003, 2.111228e-002, -4.491922e-002, -8.119300e-002, -3.361261e-002, 5.591392e-002, 8.110424e-002, 3.484689e-002, -3.341732e-002, -5.942696e-002, -1.616941e-002, 2.289712e-002, -3.015908e-002, -3.029104e-002, -2.616600e-002, -5.277068e-002, -1.400844e-002, 3.281298e-002, 4.134395e-002, -3.337171e-002, -8.445273e-003, 1.147022e-002, -1.335592e-002, 4.769289e-003, -1.234468e-002, 1.971193e-002, -4.276734e-002, -9.456656e-002, -6.891454e-002, -5.173366e-003, 2.960287e-002, 1.369240e-002, -1.196334e-002, 1.177240e-002, 6.511838e-002, 2.414130e-002, -3.261947e-002, 1.932550e-002, -2.332448e-002, -9.455355e-002, -3.582952e-002, 2.415263e-002, 5.156701e-002, 5.822109e-002, 5.857009e-002, 3.090723e-002, -1.902780e-002, -3.910083e-002, -3.938341e-002, 1.544204e-002, -3.501206e-002, -7.629004e-002, -5.558087e-002, -3.014627e-002, 9.961070e-003, 1.708366e-002, 2.051101e-002, 4.736661e-002, 5.170820e-002, 1.591266e-002, 4.216225e-002, 6.736349e-002, -2.364822e-002, -6.322536e-002, -2.176462e-002, -3.131528e-002, -3.753460e-002, 3.868928e-002, 6.240516e-002, 7.042547e-002, 1.376162e-002, -4.371016e-002, -5.658327e-002, 8.881261e-004, -2.911409e-002, -5.162048e-002, -2.378804e-002, -1.743440e-002, 9.067526e-003, 3.188807e-002, 2.649440e-002, 1.848250e-002, -1.824555e-003, -9.878243e-003, -3.408890e-002, -3.670586e-002, -5.349434e-004, -1.154715e-002, -1.799109e-002, -6.175288e-002, -8.211754e-002, -2.945708e-002, -7.572896e-002, -4.722051e-002, 2.682760e-002, 1.499786e-002, -3.101533e-002, 1.097588e-002, 1.968572e-003, -9.467011e-003, 2.188405e-002, 1.187247e-002, 2.162128e-003, 2.060833e-002, -2.899124e-003, -2.194764e-002, -2.696224e-002, -7.481745e-002, -1.389959e-001, -2.331006e-002, 1.274459e-001, 2.451554e-002, -8.627402e-003, 3.368098e-002, 8.164668e-002, 4.179757e-002, -1.173057e-001, -1.346557e-001, -1.776335e-002, 4.645054e-002, 5.254165e-003, 3.048431e-002, 3.228501e-002, 3.054046e-002, 6.601509e-002, 6.639142e-002, 1.883565e-002, -5.197344e-003, -3.515957e-002, -1.927832e-002, -2.062392e-002, -6.357319e-002, -9.365853e-002, -1.320433e-002, 6.930898e-002, -7.381123e-003, 2.250494e-002, 4.921589e-002, 5.697788e-003, -2.398842e-003, -5.813726e-002, -1.022418e-001, -2.962837e-002, 5.564000e-002, -5.255904e-003, 1.263998e-002, 3.041494e-002, 4.689768e-002, 8.670370e-002, 1.037671e-001, 1.621653e-002, -4.222280e-002, -3.384815e-002, 2.915168e-002, 1.926943e-002, 5.410500e-004, 7.558582e-003, 4.737823e-002, 3.207925e-002, -8.195456e-002, -2.520831e-002, -6.689006e-003, -4.649038e-002, -1.405423e-002, 5.705744e-003, -1.175593e-002, 7.047213e-003, 6.233566e-002, 4.875036e-003, 8.401893e-003, 1.466900e-002, 2.703270e-002, 7.089342e-002, 1.026506e-001, -9.607114e-003, -7.921765e-002, -1.113194e-002, 3.887377e-002, 1.062254e-004, -3.249990e-003, 3.500330e-002, 7.332319e-002, 2.994207e-002, -5.852543e-002, 6.051774e-003, -1.011449e-002, -2.289821e-002, 7.496915e-003, 2.461247e-002, 2.983614e-002, 2.711144e-002, 5.023740e-002, 1.877193e-002, 7.533897e-003, -4.459974e-003, 1.641724e-003, 2.264606e-002, 6.370486e-002, -1.939001e-002, -7.161798e-002, 1.463982e-003, -4.541324e-003, -5.967925e-002, -4.686852e-002, 1.334008e-002, 3.766346e-002, 2.843441e-003, -3.555809e-002, -8.465272e-003, -3.441601e-002, -3.614542e-002, -1.344093e-002, -4.149337e-003, 1.661176e-002, 2.279487e-002, 1.839283e-002, -2.413143e-004, 2.759726e-003, -1.958645e-002, -1.427546e-002, -3.183400e-002, 6.276823e-003, -2.281686e-002, -4.351129e-002, 2.219321e-002, 3.550989e-002, -4.259945e-003, -3.197227e-003, -2.006517e-003, -1.222631e-002, -2.192914e-002, -2.055388e-002, -2.730717e-002, -2.504672e-002, 9.830347e-003, 4.783018e-002, 6.914812e-002, 7.578733e-002, 7.513980e-002, 2.398420e-002, -1.375922e-002, -9.658723e-003, -1.551765e-002, -6.106837e-003, -6.166320e-002, -4.798654e-002, -2.662257e-002, -1.963752e-002, -1.086175e-002, 5.504404e-003, 2.564564e-002, 1.157045e-002, -9.296652e-003, -2.046570e-002, -1.144894e-002, -7.379662e-003, -7.171276e-003, 4.160808e-003, 7.073645e-003, 4.195005e-004, 1.814560e-002, 3.548513e-002, 1.371165e-002, -6.277769e-002, -9.634766e-003, -1.536213e-002, -1.345773e-002, 8.653256e-003, -3.316962e-002, -7.095827e-002, -2.935530e-002, 9.695179e-005, -4.095956e-002, -2.690705e-002, 3.237034e-002, 3.286388e-002, 1.582350e-002, -5.473549e-003, -1.424065e-002, -4.766189e-003, 5.542121e-003, -2.005704e-002, -3.765123e-002, -3.079989e-002, -1.268295e-003, 2.664309e-002, 2.331260e-003, -8.206980e-002, -


© ISO/IEC 2004 — All rights reserved

Copyright International Organization for Standardization
Provided by IHS under license with ISO
No reproduction or networking permitted without license from IHS
Not for Resale

6.341121e-003, 8.657479e-003, 9.069616e-003, 1.345675e-002, 3.418357e-002, -4.947992e-002, -3.449819e-002, 7.478417e-003, -2.071158e-002, -1.623267e-002, 1.878643e-002, 1.769614e-002, 8.450458e-003, 4.024127e-003, 1.097597e-002, 2.289092e-002, 2.229837e-002, -1.847314e-003, -1.898760e-002, -2.369356e-002, 3.797946e-003, 3.780287e-002, 1.309343e-002, -6.600645e-002, -2.089148e-003, 9.626177e-003, 4.042043e-002, -1.149335e-002, 7.373241e-002, -6.261452e-003, -3.376276e-002, 9.112815e-003, 2.234186e-002, -7.453734e-003, -5.103550e-003, 2.170580e-002, 3.288173e-002, 3.507230e-002, 2.389733e-002, 1.144663e-002, -3.193351e-003, -1.780694e-002, -3.285586e-002, -3.389855e-002, -2.031173e-002, -3.400597e-003, -1.295776e-002, -6.191845e-002, 2.515136e-002, -1.896788e-002, 3.957150e-002, -4.126860e-002, 3.084858e-002, 2.747225e-002, -2.641988e-002, 1.220606e-003, 4.438579e-002, 3.044708e-002, 3.117211e-003, 1.136458e-002, 1.439284e-002, 1.399282e-002, 1.923640e-002, 1.440947e-002, 6.524007e-003, -5.011416e-003, -2.039982e-002, -2.352226e-002, 1.238156e-003, 2.182128e-002, 1.477106e-002, -2.073602e-002, 1.983645e-003, -6.593807e-002, 1.263149e-002, -4.314000e-002, -3.319873e-002, 2.830354e-002, -1.181487e-002, -1.362115e-002, 3.635483e-002, 4.078145e-002, 2.038059e-002, 7.618940e-003, 8.216988e-003, 5.232385e-003, 4.441190e-003, -8.231258e-003, -1.413628e-002, -1.553119e-002, -1.062537e-002, 9.416172e-003, 4.403425e-002, 6.172930e-002, 5.240274e-002, 2.059920e-002, -2.502526e-002, -5.989277e-002, 1.617883e-002, -2.217166e-002, -3.226552e-002, 1.423042e-002, 5.925107e-003, -4.259508e-003, 1.700929e-002, 2.788240e-002, 2.421172e-002, 1.798077e-003, -3.719343e-003, -7.583114e-003, -9.207878e-003, -1.534610e-002, -2.156688e-002, -2.400020e-002, -1.230469e-002, 5.419066e-003, 3.688224e-002, 5.947549e-002, 5.567244e-002, 2.173131e-002, -9.903765e-003, 1.635167e-002, 3.466975e-002, -1.253382e-002, 3.277166e-003, 1.063785e-002, 1.044087e-002, 8.075936e-003, -4.805734e-003, 2.459545e-003, 2.800389e-002, 2.434482e-002, 2.797188e-003, -1.092623e-002, -1.103195e-002, 2.672599e-005, 6.791221e-003, -2.082404e-003, -1.239609e-002, -4.052928e-003, 1.245342e-002, 2.854336e-002, 1.801404e-002, -2.154398e-002, 3.591886e-002, 5.047467e-002, 2.129430e-002, -1.184675e-002, 1.263493e-002, -1.375750e-002, -2.102326e-002, -1.686034e-002, -2.421403e-002, -3.311164e-002, -4.190938e-003, 2.505451e-002, 1.903609e-002, -8.051714e-003, -1.240632e-002, 6.351384e-003, 2.078959e-002, 1.067500e-002, -3.143665e-003, -2.081494e-002, -2.423611e-002, -3.492724e-002, -6.096102e-002, -9.209283e-002},
{5.923586e-002, 4.623646e-002, -2.233034e-002, -4.260732e-002, -1.019398e-001, -1.473932e-001, -9.724006e-002, -9.025736e-003, 4.480603e-002, 5.137614e-002, 4.424258e-002, 6.705444e-002, 1.330711e-001, 5.170555e-002, -5.644869e-002, -4.032037e-002, -5.058465e-002, 5.900178e-003, -3.344556e-002, -4.682725e-003, 3.869227e-002, -3.448109e-002, -6.575596e-002, -3.729601e-002, 2.624611e-002, 1.747381e-002, -2.931893e-003, 5.719849e-003, 2.479559e-002, 1.993022e-002, 2.862332e-002, 3.658446e-002, 1.966594e-002, -9.498169e-003, -3.428770e-002, -5.057387e-003, 4.593643e-002, -4.080690e-002, 1.520573e-002, 8.959570e-003, -1.581517e-002, 4.818149e-002, 2.446457e-002, -4.899913e-002, 2.197936e-002, -5.252736e-002, -1.184433e-001, -1.134382e-001, -1.623189e-002, -2.335560e-002, -6.072551e-003, 1.266259e-002, 7.804525e-002, 1.142295e-001, 1.274613e-001, 1.016303e-001, 5.511872e-002, 1.902834e-003, -3.199205e-002, -2.284725e-002, -2.573880e-002, -4.250746e-002, 7.752041e-002, 3.749215e-002, -1.274232e-002, 5.472567e-002, 7.907549e-002, -3.315297e-002, -2.257257e-002, -1.232110e-002, -4.674942e-002, -6.089471e-002, -3.793639e-002, -4.848724e-002, -3.015356e-003, 8.010702e-003, 4.444595e-002, 7.756367e-002, 1.181940e-001, 9.746689e-002, 4.216378e-002, -1.150222e-002, -3.953744e-002, -3.751131e-002, -5.568092e-002, 1.818272e-002, 7.226121e-002, 2.725358e-002, -3.447227e-002, 4.749671e-003, 6.463256e-002, 1.042194e-002, -1.524357e-002, -6.955357e-004, -9.809314e-003, -2.333676e-002, -5.123237e-002, -5.138284e-002, 1.398894e-002, 1.243353e-003, 1.374660e-002, 8.841337e-004, 2.019235e-002, 6.338065e-003, -2.876943e-002, -5.917452e-002, -4.308698e-002, -7.952245e-003, 5.239524e-003, 4.838289e-003, 3.999285e-002, 1.507470e-002, -4.303904e-002, -5.041316e-002, -1.126518e-002, 1.375096e-002, 6.776326e-003, 3.139236e-002, 4.551671e-003, -2.629962e-002, -3.710843e-002, -4.782500e-002, 1.310522e-002, 7.127687e-003, -5.987845e-003, -3.515411e-002, -3.489064e-002, -3.998946e-002, -4.838769e-002, -2.947761e-002, 1.434407e-002, 3.621044e-002, -1.767004e-002, -4.864032e-002, -2.243907e-003, 2.865735e-002, 8.614025e-003, -7.942781e-003, -5.518510e-002, -6.445131e-002, -9.449837e-003, 3.921993e-003, -7.738116e-003, -3.315283e-002, 1.327902e-002, -2.320981e-002, 2.688438e-002, 1.146402e-002, -1.242904e-002, -6.034141e-002, -7.262489e-002, -6.839395e-002, -2.416523e-002, 4.048347e-002, 5.337059e-002, -9.116566e-003, -7.130360e-002, -2.993374e-002, 8.231283e-003, 2.738205e-002, 4.933359e-002, 9.020201e-002, 6.296743e-002, -6.639618e-002, -3.430194e-002, 8.541192e-003, -2.808586e-002, -5.979018e-002, 6.132666e-002, 3.420496e-003, 4.057781e-002, 2.037585e-002, 1.026184e-002, -1.454306e-002, -1.699307e-002, 1.057997e-002, 6.500715e-002, 7.411811e-002, -2.242841e-003, -5.129504e-002, -3.104236e-002, 1.112204e-002, 1.340822e-002, -1.236309e-002, -5.499942e-002, -3.756256e-002, 8.263375e-002, 3.584849e-002, -1.353418e-002, 5.320227e-002, 3.804313e-002, 2.705653e-003, 8.942121e-002, 9.162768e-003, 3.930760e-002, 1.568712e-003, 5.402439e-003, -3.493280e-005, 8.485357e-003, 3.940655e-002, 5.398387e-002, -7.938885e-003, -7.258422e-002, 7.270328e-003, 7.311028e-002, 3.792783e-002, 7.691297e-003, 2.574980e-002, 5.225507e-004, -6.708392e-002, -2.876526e-002, 1.540739e-002, -7.485909e-003, 5.120463e-002, 6.055054e-002, 3.769101e-002,

© ISO/IEC 2004 — All rights reserved


Copyright International Organization for Standardization
Provided by IHS under license with ISO
No reproduction or networking permitted without license from IHS
Not for Resale

6.925688e-002, 2.789018e-003, 2.147549e-002, -3.179060e-002, -2.732253e-002, -1.155246e-002, -5.572498e-003, 5.627312e-003, -1.592890e-002, -8.530375e-002, -7.318570e-002, 1.766902e-002, 1.858463e-002, -2.434004e-002, -2.280924e-002, -1.459508e-002, -1.630815e-002, 6.501170e-003, 6.930448e-002, -8.067409e-003, -3.342422e-002, 1.713271e-002, 1.672926e-002, 3.558606e-004, -4.631291e-002, -5.389442e-002, 1.563280e-003, -5.677826e-002, -5.317404e-002, -2.617981e-002, -1.988197e-002, -1.935416e-002, -5.090159e-002, -6.925506e-002, -2.079205e-002, -3.658726e-002, -7.468329e-002, -1.429903e-002, 5.392641e-002, 1.298491e-002, -6.110488e-002, -5.486058e-002, 5.081880e-002, 5.467775e-002, 4.876937e-003, 1.513746e-002, -1.157361e-003, -3.077837e-002, -4.748674e-002, -5.774950e-002, 6.463981e-003, -4.424125e-002, -5.015793e-002, -2.350410e-002, -1.454562e-003, -3.506767e-003, -9.142043e-003, 3.150388e-003, 1.268993e-003, -5.531157e-002, -8.371973e-002, -1.788268e-002, 7.712073e-002, 1.182626e-001, 6.085282e-002, 1.590268e-003, -1.909251e-002, -2.990739e-002, -2.008549e-002, 1.649669e-002, 1.377623e-002, -1.684276e-002, 3.225217e-002, 8.733703e-003, 3.163129e-002, -1.559923e-002, -3.173869e-002, -8.590800e-003, 3.427122e-002, 2.998736e-002, 2.966865e-002, 5.376581e-002, 9.534601e-003, -5.780102e-002, -7.729775e-002, -3.041842e-002, 3.075414e-002, 5.020079e-002, 3.369415e-002, 2.524959e-002, -8.939486e-003, -4.398609e-002, -3.709038e-002, -4.018357e-003, 2.853298e-002, 2.055450e-002, 6.819685e-002, 3.305273e-002, 3.110564e-002, -3.627752e-003, 2.918990e-003, 2.201417e-002, 5.723379e-002, 2.777120e-002, -6.619957e-003, 9.153788e-003, 9.018148e-003, 1.234184e-002, 2.025988e-003, 7.171261e-005, -2.155474e-002, -6.537927e-002, -6.443663e-002, -1.877676e-002, 2.309163e-002, 4.022170e-002, 4.708176e-002, 3.719502e-002, 9.427212e-003, 4.742754e-003, 2.097246e-002, 1.073499e-002, 2.892246e-003, -2.153325e-002, 2.423203e-002, 5.478456e-002, 5.292629e-002, -9.572588e-003, -9.048817e-002, -8.472150e-002, -7.364040e-003, 5.603892e-002, 6.491343e-002, 2.199804e-002, -1.790293e-002, -3.468604e-002, -3.782033e-002, 1.868666e-003, 3.834925e-002, 9.135918e-002, 8.450712e-002, 8.790963e-003, -5.962735e-002, -4.181999e-002, -4.991595e-002, -1.773954e-002, -2.333979e-002, -3.792018e-002, 3.593542e-002, 7.396727e-002, 3.395811e-002, -2.263608e-002, -4.102061e-002, -1.808750e-002, -1.276430e-002, -4.176398e-002, -4.377149e-002, -2.146348e-002, 1.618006e-002, 2.867116e-002, 1.902769e-002, 3.273680e-002, 4.439095e-002, 2.049104e-002, -2.408410e-002, -7.631550e-002, -6.483787e-002, 7.960580e-003, -6.874800e-002, -2.026703e-002, -8.301542e-003, -3.072066e-002, 1.086179e-002, 5.857636e-002, 2.569342e-002, -6.845976e-003, 2.914707e-002, 7.060975e-002, 4.624368e-002, -3.982232e-002, -7.678810e-002, -4.843495e-002, -5.488311e-003, -1.458554e-003, -4.517070e-003, 1.232433e-002, 1.947853e-004, -1.501687e-002, -1.218015e-002, 1.316923e-002, 3.470537e-002, 5.004853e-002, -1.829941e-002, -1.570253e-002, 3.131208e-002, 1.117705e-002, -2.650868e-002, 2.738759e-002, 1.111375e-002, -2.808650e-002, 2.000508e-002, 4.322644e-002, 3.198199e-002, 5.133973e-002, 6.255388e-002, 5.544773e-002, 2.470109e-002, -1.902492e-002, -4.281378e-002, -4.089439e-002, -1.759512e-002, 1.656036e-002, 3.850998e-002, 4.734683e-002, 3.151637e-002, 2.652022e-002, 3.033818e-002, -4.384842e-003, 2.592684e-002, 9.323033e-002, -3.415303e-002, -7.837429e-003, 2.954076e-003, -3.580275e-002, -2.282242e-002, 5.502911e-003, 2.713921e-002, 6.132430e-002, 8.319524e-002, 6.068130e-002, 1.336889e-002, -4.418060e-002, -6.944260e-002, -5.288646e-002, -1.130347e-002, 2.647390e-002, 4.786637e-002, 3.242601e-002, -1.174122e-002, -2.125754e-002, 1.404736e-002, -3.047112e-002, -1.537054e-002, 1.130256e-001, -1.279363e-002, -1.363904e-002, 1.507651e-002, -1.502943e-002, -3.863637e-002, -4.300890e-002, -2.416796e-002, 1.778954e-002, 5.642266e-002, 4.002604e-002, -1.541668e-002, -6.303096e-002, -7.761806e-002, -4.505509e-002, 8.186104e-003, 5.031298e-002, 5.186540e-002, -9.757092e-004, -4.553786e-002, -3.598816e-002, -5.732503e-002, -3.508439e-002, -8.636425e-003, 3.112474e-002, -2.544955e-002, 2.709865e-003, 2.919390e-002, 2.054106e-002, -2.400806e-002, -5.899612e-002, -5.532065e-002, -1.641810e-002, 3.678606e-002, 6.066362e-002, 3.968823e-002, -3.529044e-003, -2.246838e-002, -9.043095e-003, 2.477199e-002, 4.809124e-002, 3.110271e-002, -3.378985e-002, -5.849328e-002, -3.008074e-002, -3.509678e-002, 1.927857e-002, 2.241312e-002, -4.350848e-002, -7.845720e-002, 8.484776e-003, 2.581329e-002, 2.268206e-002, 1.250145e-002, -2.788865e-002, -6.427209e-002, -4.515773e-002, 6.908828e-004, 3.429241e-002, 2.172144e-002, -9.473323e-003, -5.335071e-002, -5.014609e-002, -2.321829e-002, 5.209444e-003, -8.354614e-003, -5.133646e-002, -6.074890e-002, -2.681697e-002, 1.919595e-002, 1.946340e-002, 4.582888e-003, -1.492354e-002, -7.643857e-002, 4.804326e-002, 1.614526e-002, -2.547712e-002, 2.198762e-002, 2.449432e-002, -3.543492e-002, -4.850807e-002, -2.656214e-002, 1.051316e-002, 1.849269e-002, -1.939827e-003, -4.992354e-002, -4.580597e-002, -1.221281e-002, 1.742801e-002, 8.204239e-003, -2.265099e-002, -2.485291e-002, 4.622657e-004, 1.467651e-002, -5.155034e-003, 3.264182e-002, 7.854064e-002, -5.583636e-003, 5.534896e-002, -1.019264e-002, -9.176430e-002, -4.005456e-002, 3.966577e-002, 1.411001e-002, -1.408210e-002, -1.868384e-003, 2.497387e-002, 4.248105e-002, 3.830443e-002, 2.593622e-002, 3.067795e-002, 5.567076e-002, 8.164819e-002, 6.479346e-002, 2.862027e-002, 3.206584e-002, 2.140549e-002},
{5.781976e-002, 6.423859e-002, 7.675159e-002, 6.484207e-003, -8.050524e-003, 2.341766e-002, 4.526164e-002, 2.691274e-002, 1.682821e-002, 7.462515e-003, 2.113163e-003, 3.411912e-004, 7.818326e-003, 8.308124e-002, 7.588732e-003, -6.354448e-002, -6.690682e-002, -3.029908e-002, 2.788800e-002, -4.874490e-002, 7.791148e-002, 6.880579e-002, -4.928429e-002, -1.419737e-001,


© ISO/IEC 2004 — All rights reserved

Copyright International Organization for Standardization
Provided by IHS under license with ISO
No reproduction or networking permitted without license from IHS
Not for Resale

1.632171e-002, 8.119546e-003, 4.148700e-002, 4.406143e-003, 5.068309e-003, 2.464825e-002, 1.826848e-002, 1.557860e-002, 2.446515e-002, 1.367236e-002, 9.138792e-003, -8.029969e-003, -1.418235e-002, -1.232296e-002, -9.497623e-003, 1.540382e-002, 1.220728e-002, 2.675571e-002, 5.165922e-002, -8.739134e-002, 2.058777e-002, 9.539942e-002, 4.134389e-002, -2.162427e-002, -1.325899e-002, -1.208872e-002, 8.605646e-004, 7.747475e-003, 2.715189e-003, -1.060630e-003, -4.020212e-002, -4.105182e-002, -3.882288e-002, -3.883952e-002, -3.139996e-002, -2.796488e-002, -5.354000e-002, -1.102297e-001, -1.720493e-003, 6.620224e-002, 3.434226e-002, 4.452164e-002, 4.203863e-002, -6.344395e-002, -8.309088e-002, 1.685891e-002, 4.072191e-002, 6.341800e-003, -1.521894e-002, -1.819292e-002, -2.229078e-002, -1.935996e-002, 3.774158e-002, 2.356282e-002, -4.901304e-002, -5.485676e-002, -4.382251e-002, -2.537729e-002, 7.049868e-003, 9.591869e-003, -8.027160e-002, -1.150743e-001, 4.259705e-002, 5.073411e-002, -9.970176e-003, 2.905692e-002, 9.668331e-003, -4.910816e-003, -2.022500e-002, -1.544434e-002, -3.375425e-003, -1.798960e-002, -3.462350e-002, -1.012391e-002, -3.954342e-003, -5.688361e-002, 1.173847e-002, 5.909072e-002, 3.047288e-002, 3.782065e-002, 7.050344e-002, 8.878631e-002, 9.502493e-002, 2.606708e-002, -8.367590e-002, -4.382114e-002, 4.209470e-002, -2.711844e-002, -7.207830e-002, -2.016139e-002, -1.569853e-002, -6.522107e-002, 5.372889e-002, 1.171421e-001, 5.788395e-002, 2.151358e-002, -2.109675e-002, -1.077538e-003, 1.774351e-002, -5.535329e-002, -4.500739e-002, 3.378645e-003, 1.695888e-002, 3.633705e-002, 4.899057e-002, 4.234604e-002, 2.135576e-002, 1.050539e-002, 8.428859e-003, 2.752036e-002, 1.276242e-002, -8.096709e-002, -6.431921e-002, -8.512088e-003, -3.517969e-003, -9.785382e-002, -5.922355e-003, 1.056177e-001, 8.880508e-002, 4.932998e-002, 1.589271e-002, 1.585834e-002, 4.669650e-002, -1.992011e-002, -5.244577e-002, -6.223479e-002, -8.657225e-002, -1.040545e-001, -9.897445e-002, -6.482314e-002, 1.163942e-002, 8.591653e-002, 5.155564e-002, 5.510912e-002, 4.005865e-003, -6.602489e-002, 6.049305e-003, 8.003074e-003, 4.001903e-002, -3.343303e-002, -2.704549e-002, 3.284333e-002, -5.657390e-002, -1.108737e-001, 4.880365e-002, 2.136281e-002, 5.429667e-002, 2.172797e-002, 1.162451e-002, 1.712705e-002, -1.778562e-002, -4.677272e-002, -3.019808e-002, 1.196645e-002, 6.356057e-002, 4.604980e-002, -1.912543e-002, 4.314416e-002, 3.070424e-002, 2.848353e-003, 1.117641e-003, -1.294723e-001, -5.259629e-002, 3.331957e-002, 6.807104e-003, 5.141575e-002, -4.858194e-002, -1.182424e-001, 5.561325e-002, 6.297688e-003, 3.908369e-002, 3.205014e-002, 4.088242e-002, 6.757893e-002, 6.809458e-002, 5.120839e-002, 3.921657e-002, 4.274961e-002, 2.740362e-002, -3.308702e-002, -9.296827e-003, 1.178663e-001, 3.214385e-002, 6.305104e-003, 6.122727e-002, -1.540364e-002, -2.093718e-002, 5.845717e-002, 5.016180e-002, 2.274778e-002, -2.220112e-002, -7.158173e-002, 3.140220e-002, -1.464451e-002, -1.709591e-002, -4.293930e-003, 9.679282e-003, 5.375059e-002, 7.506310e-002, 5.840178e-002, 3.167229e-002, 2.216044e-002, -7.349545e-003, -7.039770e-002, -6.674301e-002, -1.766932e-002, -4.503602e-002, -4.785656e-002, 4.410632e-002, 2.338524e-002, 4.620776e-002, 6.128941e-002, 1.779256e-002, -4.288992e-002, -6.189255e-002, -7.685157e-002, -3.826650e-004, -2.923261e-002, -4.582815e-002, -4.452733e-002, -4.004761e-002, -2.846878e-003, 2.522603e-002, 2.357075e-002, -7.257391e-004, 1.839226e-002, 3.588978e-002, 1.466404e-002, -6.465142e-002, -6.247079e-002, -3.455973e-002, -1.511715e-002, 2.307364e-002, 2.277015e-002, 1.537455e-002, 3.861729e-003, -3.952886e-002, -5.199144e-002, -4.507495e-002, -6.358090e-002, 2.492915e-003, -1.001771e-002, -4.817353e-002, -5.387415e-002, -5.586179e-002, -2.330082e-002, -3.820229e-003, 1.042683e-002, 1.058175e-002, 2.962840e-002, 6.457795e-002, 8.283698e-002, 3.398635e-002, 6.492011e-004, -8.857401e-003, -7.204222e-003, 4.782056e-002, 8.930233e-002, 3.518171e-002, -3.457124e-002, -7.114499e-002, -4.459610e-002, -1.082316e-003, 2.930328e-003, 1.042748e-002, 1.211957e-002, -2.552430e-002, -3.654936e-002, -6.238189e-002, -3.307671e-002, -1.363635e-002, 5.375430e-003, 1.418139e-002, 7.166996e-005, 2.117509e-002, 6.418521e-002, 5.765251e-002, 2.286001e-002, -8.338000e-003, -3.616627e-002, -3.483687e-003, 6.292757e-002, 5.835563e-002, -1.401286e-002, -7.797432e-002, -7.735340e-002, 1.966607e-003, 5.154019e-002, -2.428023e-002, 1.967011e-002, -9.830286e-003, 1.189952e-003, -3.361841e-002, -1.820870e-002, 1.088858e-003, 3.767876e-003, -2.596741e-002, -8.120946e-002, -5.409874e-002, 3.166155e-002, 4.594476e-002, 9.312276e-003, -1.759948e-002, -3.678008e-002, -2.112569e-002, 1.538710e-002, 4.546131e-002, 2.368411e-002, -2.701541e-002, -6.245621e-002, 8.744432e-003, 8.688410e-002, -3.734483e-002, 1.923491e-002, -1.532413e-002, 2.866792e-002, 6.425458e-003, 1.618853e-002, 3.014712e-002, -4.663700e-003, -5.765219e-002, -8.862206e-002, -6.546142e-002, -2.740344e-002, -2.457469e-002, -1.736994e-002, 1.023441e-003, -1.126616e-002, -1.144289e-002, -9.796602e-003, 1.624423e-002, 1.190021e-002, 1.055802e-003, -1.376646e-002, 4.498253e-002, 1.148354e-001, -1.916690e-002, 8.594979e-003, -2.511392e-002, 2.016986e-002, 4.547957e-002, 4.190204e-002, 5.256703e-002, 1.819219e-002, -1.437362e-002, -3.028143e-002, -2.992711e-002, -1.363430e-002, 1.824216e-002, 4.422124e-002, 2.570955e-002, -1.986988e-002, -4.794508e-002, -3.960816e-002, -1.239952e-002, 2.112910e-002, 5.532475e-002, 4.899776e-002, -1.521149e-002, 1.508829e-002, -1.510398e-002, 3.902921e-003, -2.442024e-002, -1.579102e-002, 3.572813e-002, 2.137384e-002, 3.819634e-002, 1.388498e-002, -3.010695e-002, -6.588768e-002, -8.047130e-002, -5.618532e-002, 2.270010e-004, 2.031444e-002, 5.516437e-003, -1.717092e-002, -2.379202e-002, 7.465917e-003, 2.725105e-002, 5.556465e-002, 6.867865e-002, 3.077080e-002, -4.347303e-002, -3.630845e-002, -

© ISO/IEC 2004 — All rights reserved


Copyright International Organization for Standardization
Provided by IHS under license with ISO
No reproduction or networking permitted without license from IHS
Not for Resale

3.115290e-002, -2.542527e-003, -2.853744e-002, -3.668416e-002, -1.869340e-003, -1.540723e-002, 6.666001e-003, 9.286799e-003, -1.728521e-002, -2.714379e-002, -2.683838e-002, -2.667308e-002, -1.542973e-002, -1.446160e-002, -3.342765e-002, -2.810170e-002, -1.044030e-003, 3.180185e-002, 4.958948e-002, 3.715452e-002, -4.934678e-003, -2.719215e-002, -2.369693e-002, 2.617887e-002, -2.742635e-002, 1.495401e-002, 1.721497e-002, -1.593553e-002, 8.596625e-003, -3.895351e-002, -2.220595e-002, 2.042490e-002, 4.307259e-003, 3.176323e-003, 3.173077e-002, 2.490457e-002, 4.933825e-003, -8.309896e-003, -1.900428e-002, -1.395502e-002, 1.428158e-003, 1.862665e-002, 2.199988e-002, 8.554803e-004, -1.888140e-002, -1.754232e-002, 8.266857e-003, 8.404127e-002, 6.760883e-003, 6.005437e-002, 5.418120e-002, 2.760146e-003, 5.858427e-002, -3.349189e-003, -3.299211e-002, 3.059678e-002, 1.254391e-002, -3.167626e-002, -2.778911e-003, 3.379645e-002, 1.929641e-002, 9.041952e-004, -2.371739e-003, 3.132609e-003, 1.365466e-002, 3.147641e-002, 2.407251e-002, -3.508207e-003, -1.583689e-002, -1.589297e-002, 2.401884e-002, 9.698622e-002, -5.202556e-003, 4.471607e-002, 4.117704e-002, -1.297637e-002, 5.635127e-002, 4.199109e-002, -3.263020e-002, 2.466310e-002, 1.221396e-002, -8.268169e-002, -6.867143e-002, -4.374882e-003, 1.609785e-002, 1.582529e-002, 8.451352e-003, -3.953691e-003, -6.338874e-003, 1.067632e-002, 2.653529e-002, 2.079329e-002, -4.543000e-003, -2.816378e-002, -6.107502e-003, 4.384638e-002, -9.129707e-003, 6.450539e-003, 9.689312e-003, -2.004395e-002, 9.098084e-003, 3.931418e-002, -2.013005e-002, 1.877641e-002, 2.170152e-002, -7.163764e-002, -1.036913e-001, -3.265479e-002, 4.681515e-002, 6.203767e-002, 2.986052e-002, -2.116850e-002, -5.329870e-002, -1.942063e-002, 3.052039e-002, 4.900467e-002, 1.339110e-002, -2.444397e-002, -2.764620e-002, 2.340867e-003, 1.347784e-002, -1.439556e-002, -4.224014e-002, -1.802060e-002, -3.062618e-002, 1.416946e-002, -2.579345e-002, -6.954986e-003, 5.228042e-002, 1.465191e-002, -3.705952e-002, -1.300502e-002, 6.676539e-002, 9.540096e-002, 4.082748e-002, -4.098288e-002, -8.501343e-002, -3.827943e-002, 2.886359e-002, 4.704051e-002, 1.194292e-002, -2.939386e-002, -3.664963e-002, -7.006873e-003, 3.577760e-002, -2.398362e-002, -4.030722e-002, -2.432258e-003, -3.544486e-002, -1.524161e-002, -5.085447e-002, -5.488361e-002, 2.728484e-002, 6.425881e-002, 3.523138e-002, 1.559360e-002, 4.755742e-002, 6.091847e-002, 3.783760e-003, -7.090391e-002, -9.839078e-002, -6.303779e-002, -8.714280e-003, 1.004581e-002, -9.335053e-003, -3.182923e-002, -2.491228e-002, 4.084372e-004},
{5.681280e-002, 4.372273e-002, 9.905417e-003, -2.956247e-003, -5.504131e-002, -1.271173e-001, -1.124084e-001, -2.090189e-002, 4.721199e-002, 3.780244e-002, -3.382498e-002, -8.954779e-002, -5.280933e-002, 3.779161e-002, -9.660552e-002, -2.661801e-003, 2.281879e-002, -4.674914e-002, -6.204529e-002, -1.526065e-002, -9.112408e-002, -1.077150e-001, -4.217335e-002, 6.945411e-002, 2.295666e-002, 4.600485e-003, -1.916771e-003, 2.923489e-002, -1.436566e-002, -5.959434e-002, -1.903988e-002, 9.686217e-002, 1.536060e-001, 1.287809e-001, 5.141180e-002, 2.887727e-003, 7.338288e-002, 9.393437e-002, -8.749704e-002, 2.321618e-002, 3.701963e-002, -1.940916e-002, -6.796781e-002, 8.172749e-002, 1.335697e-002, -4.788662e-002, 5.337131e-003, 5.733683e-002, -9.640093e-003, -9.929276e-003, 7.928356e-003, 6.641193e-002, 2.357800e-002, -4.680290e-002, -4.851952e-002, 1.738513e-004, 2.512103e-002, 1.066429e-003, -2.412551e-002, 2.661358e-002, 1.358133e-001, 2.258519e-002, -3.348942e-002, 2.244328e-002, 1.679782e-002, -9.949957e-003, -4.987368e-002, 8.479918e-002, 1.199500e-001, -2.164187e-002, -5.200071e-002, -2.831273e-002, -1.581505e-002, -1.449441e-002, -6.363018e-003, 8.833282e-002, 8.557646e-002, -1.139549e-002, -5.035493e-002, -5.819238e-002, -6.349994e-002, -7.174300e-002, -4.112149e-002, 5.603221e-002, 8.436696e-002, -4.724885e-002, 2.856849e-003, 1.620829e-002, 4.319731e-003, -2.669165e-003, -7.324133e-003, 3.258442e-002, 1.328468e-001, 5.705382e-002, -4.053990e-002, -7.932021e-002, -2.714155e-002, 2.564319e-003, -3.571249e-002, 5.150488e-002, 1.138900e-001, 5.477782e-002, 1.420429e-002, -1.998383e-002, -4.044811e-002, -4.869989e-002, -1.520488e-002, 2.829678e-002, -4.106954e-002, -3.914030e-002, 5.123525e-003, -3.166349e-004, -5.646486e-003, -8.115404e-003, 1.323123e-002, 2.047489e-002, 5.670914e-002, 7.584680e-002, 3.016267e-002, -1.600334e-002, -5.613028e-002, 1.407897e-003, -3.780415e-002, -2.047629e-002, 3.750005e-002, 4.090723e-002, 3.148916e-002, 1.356938e-002, -1.098642e-002, -3.279016e-002, -3.404449e-002, -5.324501e-002, -5.996278e-002, 2.222796e-002, 1.880093e-003, -2.297449e-002, -2.262308e-002, -2.432349e-002, -1.080976e-003, 4.362112e-002, 1.926508e-002, -2.443067e-002, 4.388681e-004, 4.256356e-003, -7.287281e-002, 1.589325e-002, -2.237805e-002, -4.329633e-002, -1.435224e-002, -2.782303e-002, -3.556024e-002, -4.585664e-002, -5.520492e-002, -2.688254e-002, 6.662945e-003, -1.395831e-002, 9.740916e-003, 6.263084e-002, 1.758784e-003, -1.062773e-002, -1.968502e-002, -8.400674e-003, -3.240157e-002, -2.782651e-002, 8.060077e-002, -4.669097e-002, -1.020007e-001, -8.775306e-002, -7.813973e-002, 2.649059e-002, 8.910403e-003, -3.110462e-002, -2.487533e-002, -2.162241e-002, -2.216666e-002, -2.204775e-002, -3.006949e-003, 6.317576e-002, 9.602869e-002, 1.590407e-002, -2.000212e-002, 1.978287e-002, 6.463899e-002, 1.069000e-001, 4.442923e-002, 4.365226e-002, -2.707034e-003, -1.389968e-001, 2.486291e-002, 5.562381e-002, -5.839167e-002, -7.813812e-002, -4.934418e-002, 2.986034e-002, 3.858986e-002, -7.349295e-003, -2.138909e-002, -1.960080e-002, -2.066843e-002, -5.649565e-003, 3.821208e-002, 9.522112e-002, 7.811119e-002, -3.702879e-002, -1.038886e-001, -9.220386e-002, 3.894136e-002, 9.106891e-002, -6.594635e-003, -5.091199e-002, 1.211916e-003, -1.108729e-001, -3.133696e-002, 7.293236e-002, -4.857233e-003, -4.590205e-002,


© ISO/IEC 2004 — All rights reserved

Copyright International Organization for Standardization
Provided by IHS under license with ISO
No reproduction or networking permitted without license from IHS
Not for Resale

4.110516e-002, 3.088220e-002, 5.266638e-002, 3.602994e-002, -2.388539e-003, -1.527915e-002, -3.593482e-002, -1.919856e-002, 2.108012e-002, 4.115063e-002, 5.042527e-003, -3.396920e-002, -2.335648e-002, -2.605688e-002, -4.952195e-002, -5.790273e-003, 9.167146e-003, 2.502383e-002, 5.100885e-002, 1.722831e-003, 6.118953e-003, 6.445160e-002, 3.819369e-002, -3.109228e-002, 8.597555e-002, 3.491688e-002, 3.299628e-002, 6.471822e-002, 1.849626e-002, -4.113860e-003, -2.789450e-002, -2.549452e-002, -1.806041e-002, -3.302267e-002, -2.401260e-002, 1.925979e-002, 4.885103e-002, 3.549417e-002, -6.131652e-003, 8.371705e-003, 6.669499e-002, 6.008987e-002, 1.883334e-003, -1.921710e-002, -5.226436e-003, 3.774043e-002, 4.187953e-002, -1.611876e-003, 5.392676e-002, -5.204158e-003, -1.923149e-002, 6.047195e-002, 2.295346e-002, 8.300022e-003, -2.277391e-002, -3.646721e-002, -4.188567e-002, -3.028260e-002, 4.924734e-003, 4.725193e-002, 5.376742e-002, 2.836783e-002, -3.168176e-002, -6.380573e-002, 7.553505e-003, 3.494119e-002, 3.275795e-003, -2.116633e-002, -2.612786e-002, 5.603878e-003, 3.773959e-002, 2.257662e-002, 1.504127e-002, -4.396509e-002, -7.294293e-002, 2.790592e-002, 2.892415e-002, 1.801061e-002, -7.200838e-003, -2.049889e-002, 5.315775e-003, 3.500798e-002, 3.236307e-002, 2.499775e-002, 2.400447e-002, -1.190428e-003, -3.907477e-002, -4.649011e-002, -6.980524e-003, 5.536705e-002, 6.161307e-002, 1.545027e-002, -2.423297e-002, -2.044432e-002, 1.082513e-002, 2.831883e-002, 2.839425e-002, -4.374957e-002, -8.756194e-002, -2.001239e-002, 1.423658e-002, 7.963955e-003, -8.991783e-003, 6.531086e-003, 5.135047e-002, 4.367606e-002, -1.969652e-002, -5.095021e-002, -2.289956e-002, 2.513643e-003, -1.109682e-003, -1.914577e-002, -4.326546e-002, 1.085303e-002, 2.928173e-002, -7.984862e-003, -5.246812e-002, -6.299256e-002, -3.998202e-002, -1.468476e-002, 4.150472e-002, -4.195752e-002, -6.341966e-002, -5.221692e-002, -9.348867e-003, -3.239336e-003, -1.557383e-002, 1.075872e-002, 3.867264e-002, -2.200374e-003, -4.184562e-002, 1.454880e-002, 7.917073e-002, 9.451892e-002, 5.177610e-002, 9.233281e-003, -4.067455e-002, -2.261155e-002, -2.813573e-004, -3.404452e-003, -6.676509e-003, -1.849025e-003, 2.389282e-002, 1.836449e-002, 2.288558e-002, -4.925872e-002, -1.955622e-002, -3.204731e-002, -2.152951e-002, -1.252482e-002, -2.909433e-002, -2.861134e-002, -4.068469e-002, -5.040075e-002, -3.417216e-002, 6.480513e-003, 2.692226e-002, 2.665460e-003, -2.568897e-002, -4.651810e-002, -5.162054e-002, -2.686490e-002, 1.085442e-002, 1.133827e-002, -1.258560e-002, -1.641266e-002, -1.371535e-004, 1.310161e-002, 2.047835e-002, -2.089548e-002, 2.459046e-002, 2.299593e-002, -1.845894e-002, -2.699816e-002, -4.221476e-002, -4.645743e-002, -4.067769e-002, -1.124485e-002, 3.350822e-002, 5.328767e-002, 2.994229e-002, -1.442723e-002, -4.252077e-002, -4.143905e-002, -5.024827e-003, 3.753591e-002, 8.299737e-002, 1.018599e-001, 7.865629e-002, 2.301009e-002, -1.862839e-002, -2.496580e-002, 4.024848e-002, 3.139735e-002, 4.582467e-002, 6.596758e-002, 4.635508e-003, -4.057067e-002, -3.003593e-002, -9.528519e-003, 1.094718e-002, 3.409763e-002, 5.299759e-002, 5.336749e-002, 2.570335e-002, -1.854235e-002, -4.237050e-002, -3.379551e-002, -2.349521e-002, -1.245509e-002, 1.522473e-002, 2.696749e-002, 1.760403e-002, -1.177818e-002, -3.886170e-002, -4.566316e-002, 2.677529e-002, 1.781137e-002, 2.992213e-002, 4.206574e-002, 2.102610e-002, -3.607076e-002, -1.970417e-002, 1.072489e-002, 4.053508e-002, 4.085456e-002, 1.735947e-002, 2.574847e-003, 6.727514e-003, 9.672207e-003, 8.554989e-003, 5.310229e-003, -1.582855e-002, -1.286124e-002, 1.585724e-002, 3.005181e-002, 2.114878e-002, 2.814402e-003, -6.323233e-003, -7.759235e-003, 1.020937e-002, -4.712545e-002, -2.138403e-002, -1.879562e-002, 2.221337e-003, -2.021483e-002, -4.927701e-003, 6.610055e-003, 1.573556e-002, 1.258226e-002, -2.142878e-002, -4.250001e-002, -3.582580e-002, -2.425602e-002, -2.200538e-002, -2.051496e-002, -2.353035e-002, -2.335631e-002, -5.838192e-003, 1.960197e-002, 2.395386e-002, 2.923439e-002, 4.211361e-002, 2.348050e-002, -6.188461e-003, -4.661124e-002, -2.561896e-004, -8.200035e-003, 7.382709e-003, 8.912879e-003, 1.794409e-002, 3.428936e-002, 8.546126e-004, -9.360689e-003, -1.467202e-002, -2.273325e-002, -8.228729e-003, 1.498053e-002, 3.738535e-002, 4.710857e-002, 4.027683e-002, 1.572182e-002, -2.634611e-003, -7.369027e-003, -7.214778e-003, 2.390685e-002, 3.843252e-002, 8.278196e-003, 1.953681e-002, -1.121465e-003, 1.044346e-002, -1.257433e-002, -6.759016e-003, 1.418326e-002, 2.000097e-002, 3.515574e-002, 5.361517e-003, -2.790547e-002, -2.319411e-002, -1.390799e-002, -9.567263e-003, 2.421704e-003, 1.903173e-002, 3.032966e-002, 1.801022e-004, -5.501422e-002, -9.611888e-002, -9.453422e-002, -5.691618e-002, -1.966100e-002, -1.442557e-002, -3.914478e-002, 3.628503e-003, -1.891739e-003, 3.992384e-003, -1.556943e-002, -7.745148e-003, -7.691433e-003, -1.198085e-002, 1.465923e-002, 7.985972e-003, -3.353818e-002, -3.139289e-002, -3.804751e-003, -5.836924e-004, -6.277572e-003, 6.986420e-003, 1.902191e-002, -9.280688e-003, -5.638527e-002, -9.721124e-002, -8.106433e-002, -3.324583e-002, -1.370905e-002, -2.313638e-002, -3.995898e-002, -3.451461e-002, -9.749039e-003, 5.526474e-003, 1.142837e-002, 2.743415e-003, -2.782482e-002, -4.186873e-002, -1.572816e-002, 1.907703e-002, -1.034576e-002, -5.785384e-003, 2.900351e-002, 5.421951e-002, 6.495560e-002, 7.021468e-002, 7.318423e-002, 6.104317e-002, 3.626756e-002, 1.147529e-002, 2.556605e-002, 5.075225e-002, 4.345803e-002, 2.770297e-002, 4.504562e-003},
{-5.300421e-002, 4.521982e-002, 6.596350e-002, 5.714529e-002, 3.515349e-002, 7.850727e-002, 9.591890e-002, 2.878824e-002, -5.221667e-002, 2.257871e-003, 6.931626e-002, 1.307249e-002, -7.748449e-002, -4.562007e-002, -4.707450e-003, 5.426851e-002, 5.679099e-002, 1.239071e-002, -1.140602e-001, -1.106647e-001, 1.114589e-001, 1.572593e-001, 2.595567e-002, -1.555354e-001, -

© ISO/IEC 2004 — All rights reserved


Copyright International Organization for Standardization
Provided by IHS under license with ISO
No reproduction or networking permitted without license from IHS
Not for Resale

4.805474e-002, -9.329999e-003, -4.841994e-003, 2.866093e-003, -6.300113e-002, -6.311463e-002, -3.528869e-002, -1.830092e-002, -2.418909e-004, 3.145000e-002, 3.423311e-002, -4.332723e-002, -7.150264e-002, 1.272946e-002, 1.152839e-003, 3.106496e-002, 1.884985e-002, 1.614961e-002, 8.820424e-003, -1.017242e-001, 3.253773e-002, 1.233676e-001, 8.299050e-002, -3.433946e-003, -2.107487e-002, -3.480017e-002, -4.318205e-002, 1.610231e-002, -7.082911e-002, -1.213698e-001, -8.676262e-002, -5.349074e-002, -2.761085e-002, -1.999140e-002, -4.501854e-002, -8.421162e-002, -2.910373e-002, 5.095965e-002, -2.625705e-002, 1.111492e-002, -4.965852e-003, -1.062650e-002, 1.048295e-001, -5.040035e-003, -4.882459e-002, 2.282982e-002, 3.185043e-002, -7.194415e-003, 1.466920e-002, -1.840685e-002, -5.418183e-002, 2.246393e-002, 8.049734e-003, -4.647510e-002, -2.069465e-002, 1.314787e-003, -1.856760e-003, -7.529101e-003, -2.898326e-002, -4.401316e-002, 4.453799e-002, 2.233750e-002, -5.755503e-002, 1.493001e-002, -5.870303e-003, -6.227594e-002, 8.711902e-002, 1.103911e-001, -3.263833e-002, -3.181975e-002, 4.988021e-003, -2.784346e-003, 1.856637e-002, 2.406875e-002, -2.350916e-002, 2.108666e-002, 1.987406e-002, 3.413358e-002, 8.671510e-002, 1.054486e-001, 9.617926e-002, 6.177720e-002, 1.345189e-003, -1.281819e-002, 3.793974e-002, -2.277277e-002, -4.242998e-002, 2.930677e-002, 6.941662e-003, -8.881886e-002, -3.210066e-002, 1.152659e-001, 4.044542e-002, -1.206679e-002, 1.120688e-002, 1.886172e-002, 1.063450e-002, 4.144525e-002, 1.696982e-002, 1.650233e-002, -3.008184e-002, -1.500049e-002, 4.894694e-002, 6.753253e-002, 4.057426e-002, -6.271190e-003, -6.249005e-002, -3.623493e-002, 2.827505e-002, -2.185942e-002, -8.194544e-003, 4.478355e-002, 4.278798e-002, -3.083276e-002, -7.994327e-002, 2.619840e-002, 2.497324e-002, -5.239818e-002, -2.027458e-002, 2.422919e-003, -2.667862e-002, 2.998729e-002, 4.891954e-002, 5.075759e-002, -1.695805e-002, -5.286769e-002, -2.022475e-002, -1.921929e-002, -2.103760e-002, -2.937090e-002, -4.783691e-002, -1.952263e-002, 2.625989e-002, 9.894037e-003, 3.103464e-002, -1.427834e-003, 2.521479e-002, 5.683277e-002, 3.965649e-002, 1.418120e-002, -2.622240e-003, -8.391743e-002, -5.844339e-002, -2.827323e-002, -5.000636e-002, -4.862998e-003, 4.170912e-002, 6.128715e-002, 2.616951e-002, -5.235746e-003, 2.216778e-002, 4.884905e-002, 7.082876e-002, 5.922205e-002, -4.904452e-003, -2.048586e-002, 2.855401e-002, -1.952258e-002, 2.123437e-002, -6.699270e-002, -8.125713e-002, -3.225751e-002, -3.229753e-003, 4.586362e-002, 6.255086e-002, -3.471043e-002, -2.596256e-002, 8.308854e-003, -2.654072e-002, -2.497108e-002, 1.245639e-002, 4.327859e-002, 1.932884e-002, -5.113799e-003, 2.113370e-002, 7.359883e-002, 9.470485e-002, 3.739086e-002, -3.854940e-002, 1.171274e-002, 8.658247e-002, 3.584132e-003, 1.062685e-002, -6.022581e-002, -1.034397e-001, -8.969493e-002, -1.078695e-001, 3.218634e-002, 1.377277e-001, 8.013026e-003, -3.551891e-002, -7.283114e-003, 2.529849e-002, -2.222652e-002, -1.825279e-002, 7.862613e-003, -8.155001e-003, -3.537710e-002, -1.320901e-002, 4.363197e-002, 3.814535e-002, -3.691900e-002, -5.442759e-002, 2.695997e-002, 2.138484e-002, -7.489094e-002, -8.139281e-003, 2.403048e-002, 3.122109e-002, 8.965838e-003, -1.692397e-002, 4.717728e-002, 7.022772e-002, -9.106460e-003, -1.962173e-002, -2.988433e-002, 8.795067e-002, 1.015314e-002, -3.106532e-002, -6.175755e-003, -1.871051e-002, -4.820561e-002, -3.713667e-002, 1.583033e-003, -2.269492e-002, -5.408186e-002, -2.498139e-002, 2.276947e-003, -6.668927e-002, -1.471272e-001, -3.944041e-002, 8.473749e-002, 1.322133e-001, 7.194227e-002, 1.014869e-002, -4.466857e-002, -9.436888e-002, -7.370886e-002, -7.509527e-003, 3.102708e-003, 7.671239e-002, 2.306069e-002, -2.209560e-002, -6.349477e-003, -1.930009e-002, -3.919465e-002, -5.202148e-002, -4.083898e-002, -3.755235e-002, -2.337585e-002, 2.489249e-002, 2.550184e-002, -1.902665e-002, -6.829676e-002, -3.731071e-002, 1.895301e-002, 6.987508e-002, 4.528853e-002, 1.618406e-002, -2.787862e-002, -8.357674e-002, -7.338048e-002, 8.954786e-003, 6.441446e-002, -5.316944e-004, -1.297005e-002, -1.987115e-002, -9.678893e-003, 3.827445e-003, -6.309521e-003, -2.908007e-002, -2.940524e-002, 5.119410e-003, 2.995868e-002, 6.924381e-002, 6.872705e-002, 3.645495e-002, -1.429055e-002, -4.498871e-002, -6.196079e-002, -1.936211e-002, 6.530708e-003, 2.630785e-002, 2.709375e-002, 3.050957e-004, -2.636008e-002, 2.173033e-002, 9.467266e-002, -1.956176e-002, -3.567647e-002, -1.420764e-002, -9.912769e-003, 1.000396e-002, 1.245263e-002, 9.681585e-003, 1.232701e-002, 3.267135e-002, 1.788844e-002, -3.404452e-003, -2.783387e-004, 7.367366e-003, 3.385738e-002, 4.157507e-002, 5.292458e-003, 1.947800e-003, -2.421477e-002, -1.940761e-002, -3.013779e-003, -1.809534e-002, -4.790844e-002, -3.091032e-002, 3.596011e-002, -1.046674e-002, -3.641173e-002, -1.036614e-002, -1.385938e-002, 1.288037e-002, 1.917460e-002, 3.245779e-002, 4.087279e-002, 4.575413e-002, 6.078894e-003, -6.072963e-002, -6.242364e-002, -3.421675e-002, 1.438941e-002, 3.665624e-002, 3.241809e-002, 1.617435e-002, -5.107137e-002, -7.431901e-002, -3.505372e-002, 3.220470e-002, 3.941819e-002, -2.940916e-003, -2.538908e-002, 1.039163e-002, -2.428988e-002, -1.498714e-003, -1.685562e-002, 1.424971e-002, 2.002277e-002, 2.098911e-002, 2.982748e-002, 5.166070e-002, 6.562207e-002, 6.762107e-003, -5.019146e-002, -7.471222e-002, -5.456371e-002, -2.119645e-002, 1.856472e-002, 3.528057e-002, 1.102174e-002, -1.492302e-002, -3.838518e-002, -1.967466e-002, 4.142248e-002, 4.003589e-002, -3.228485e-003, 9.197003e-003, 1.485488e-003, 9.225511e-003, -3.817664e-003, -2.741993e-003, 9.840762e-003, -1.578649e-002, -1.771882e-002, 1.938157e-002, 8.412098e-002, 7.807492e-002, 3.303248e-002, -1.165134e-002, -2.972897e-002, -3.434416e-002, -1.404048e-002, -1.088932e-002, -4.685061e-003, 4.643856e-003, 8.225104e-003, -3.687492e-003, 4.215935e-003, 5.424579e-004, -2.812619e-002, -


© ISO/IEC 2004 — All rights reserved

Copyright International Organization for Standardization
Provided by IHS under license with ISO
No reproduction or networking permitted without license from IHS
Not for Resale

2.507789e-002, 2.528480e-002, 4.851109e-002, 2.146215e-002, -3.019240e-002, 9.113174e-004, -5.028107e-002, -6.970365e-002, -2.615929e-002, 5.875346e-002, 7.597915e-002, 3.832214e-002, 6.064767e-004, -2.699817e-002, -3.907974e-002, -1.451136e-002, -4.769833e-003, -1.114282e-002, -8.255394e-003, 2.769893e-003, 9.443263e-003, 1.738774e-002, 2.125024e-002, -9.194731e-003, -5.872728e-002, -1.667708e-002, 6.121861e-002, 1.499411e-002, -4.159303e-002, 3.276316e-003, -2.436300e-002, -7.110199e-002, -3.792933e-002, 3.745600e-002, 5.740496e-002, 3.139784e-002, 1.314953e-002, 1.216400e-002, 1.138369e-002, 1.302712e-002, 1.423428e-002, 9.940858e-003, 1.068758e-002, 1.244608e-003, -1.367800e-002, -1.295799e-003, 8.198754e-003, -3.619960e-003, -4.629606e-002, -5.730121e-002, 9.671612e-003, 1.067218e-002, -4.434249e-002, 1.380245e-003, 9.679648e-003, -4.486268e-002, -2.750955e-002, 4.718014e-002, 5.183134e-002, 1.830211e-002, -2.013268e-002, -3.666511e-002, -1.748202e-002, 7.877599e-005, 7.560393e-003, 4.778673e-003, -8.661221e-003, -1.323849e-002, -7.263112e-003, -7.414060e-003, -1.809551e-002, -2.648206e-002, 9.115601e-003, -7.669813e-003, -1.502100e-002, 1.026295e-002, -2.739074e-002, -9.932847e-003, 3.330678e-002, -1.982601e-003, -2.183173e-002, 4.111556e-002, 4.519410e-002, -6.087232e-003, -5.244407e-002, -5.201737e-002, -1.024777e-002, 2.642929e-002, 3.534803e-002, 2.960800e-002, 9.979051e-003, 1.891469e-002, 1.377328e-002, -1.181504e-002, -3.499500e-002, -2.850133e-002, 7.002591e-002, 5.849099e-002, -7.045557e-003, -6.546266e-003, -1.200596e-002, -3.062359e-002, 2.929018e-002, 2.470898e-002, -2.093094e-002, 7.803095e-003, 2.054939e-002, -1.304940e-002, -5.950236e-002, -6.398016e-002, -3.051304e-002, -2.776358e-003, -1.010344e-002, -1.741503e-002, -1.241817e-002, 1.756932e-002, 1.210218e-002, -1.606270e-002, -3.848465e-002, -1.796965e-002, 2.977513e-002, 3.737611e-002, 1.132914e-002, 2.367679e-003, 2.941306e-003, -1.999328e-002, 9.025829e-003, 3.891493e-002, 4.762711e-003, 2.461915e-004, 1.162651e-002, -4.508084e-004, -2.993171e-002, -3.918044e-002, -2.723661e-002, -2.543298e-002, -4.953652e-002, -4.147046e-002, -3.227252e-003, 4.051673e-002, 3.592014e-002, 3.634765e-003, -1.057415e-002, 1.178949e-002, -5.127198e-002, -1.082926e-003, 1.194394e-002, 1.012164e-002, 1.940991e-004, -7.396976e-003, -4.438988e-003, 3.744755e-002, 3.827950e-002, 1.692125e-002, 1.896044e-002, 2.307614e-002, 3.395389e-002, 2.463050e-002, 9.956411e-003, -1.294351e-002, -2.530794e-002, -8.833500e-003, 3.107452e-002, 6.952588e-002, 6.470739e-002, 2.286580e-002, 1.682836e-002, 4.339870e-002},
{3.209739e-003, 5.512959e-002, 6.038869e-002, 2.954593e-002, 1.224700e-001, 1.269841e-001, 1.386208e-002, -1.113605e-001, -1.245921e-001, -1.066567e-002, 6.992013e-002, 2.462959e-002, -8.065641e-002, -5.622384e-002, 4.382433e-002, -1.105372e-002, 3.203048e-002, 2.065767e-002, -2.389405e-003, 6.750942e-002, 7.502953e-003, 7.145532e-002, 4.502993e-002, -6.999544e-002, -2.268719e-002, -1.194694e-002, -5.267030e-003, -6.604234e-002, -4.285668e-002, -2.456808e-002, -6.892133e-002, -7.906032e-002, -2.415899e-002, 3.763771e-002, 5.071275e-002, -1.331698e-002, -9.685383e-002, -2.779642e-002, 2.791871e-002, -4.116885e-002, 4.893465e-002, 3.741380e-002, -7.034006e-002, 2.401004e-002, -5.909963e-002, 8.162516e-003, 8.292254e-002, 8.140572e-002, -1.634686e-002, -3.659404e-002, -2.405118e-002, -4.920092e-002, -5.625535e-002, -7.024836e-002, -9.672572e-002, -7.328164e-002, -1.400138e-002, 3.422387e-002, 3.738811e-002, -1.250777e-002, -4.737477e-002, 3.860695e-002, -3.092895e-002, -6.199639e-002, 6.760209e-002, 7.574983e-002, -9.188062e-002, -1.136712e-003, -2.317619e-002, -6.101214e-002, -1.320672e-002, 2.338768e-002, 1.297948e-002, -4.253473e-002, -9.455319e-003, -2.408696e-002, 4.063588e-002, 4.323113e-002, -3.710363e-003, 6.557477e-003, 4.145427e-002, 6.626850e-002, 4.921168e-002, 5.186736e-003, 2.796035e-002, 4.155649e-002, -6.564234e-002, -6.974140e-002, 5.191676e-002, 9.503913e-002, -6.584961e-002, -2.598392e-002, 3.616989e-002, -2.795863e-002, -2.977131e-002, 2.834079e-003, 4.000731e-002, -2.832681e-002, 5.588317e-003, -1.107352e-002, 3.441344e-002, 1.119745e-001, 9.556864e-002, 8.859222e-002, 9.236290e-002, 6.947926e-002, 2.655923e-002, 2.465542e-002, 5.402063e-002, 2.080067e-002, -5.144475e-002, -6.511457e-002, 1.885154e-002, 7.182260e-002, -3.714532e-002, -6.547140e-002, 6.037217e-002, 2.784039e-002, -1.313687e-002, -1.097604e-002, 5.289479e-002, 8.191313e-004, 3.008303e-002, 1.450218e-002, 1.461594e-002, 2.060261e-002, -2.639755e-002, -5.496555e-002, -7.485333e-002, -7.770333e-002, -4.257232e-002, 1.677366e-002, 3.261856e-002, 4.879519e-002, 4.760584e-003, -5.111099e-002, -3.572537e-002, 9.873314e-005, -2.925990e-002, -6.388955e-002, 1.724278e-002, 2.710721e-002, -8.235322e-003, -2.076227e-002, 1.840032e-002, 1.737045e-002, 4.865031e-002, 2.978555e-002, 2.793620e-002, 3.075910e-002, -7.023421e-003, -5.113050e-002, -7.060837e-002, -5.371811e-002, -1.223324e-002, -1.228762e-002, 1.991824e-003, 6.606569e-002, 1.112205e-002, -6.839479e-002, -7.284619e-002, -7.634663e-002, -3.612724e-002, 1.806472e-002, 3.387684e-002, 3.665143e-002, 1.373181e-002, -7.633594e-003, -4.449394e-002, 1.553058e-002, 2.810016e-002, 2.629136e-002, 2.589416e-002, 1.756945e-002, 1.838020e-003, -2.632116e-002, -3.630949e-002, -2.612734e-002, -2.789387e-002, -5.101429e-002, 1.373563e-002, 8.250469e-003, -3.976730e-002, -1.439733e-002, 4.969816e-002, 1.073136e-002, -8.092888e-003, 1.101723e-001, 8.590195e-002, 3.772290e-002, 2.808608e-002, 1.599031e-002, -9.217725e-002, -6.504978e-003, 1.705290e-002, -7.073242e-003, -6.686811e-003, -8.855522e-003, -3.148126e-003, -7.594869e-003, -4.659465e-003, -4.952298e-003, -3.031283e-002, -3.114548e-004, 5.525636e-002, -8.434155e-003, -2.004138e-002, -1.401546e-002, 5.982399e-002, 6.854729e-002, -1.233072e-002, 3.063031e-002, 2.523929e-002, -3.042124e-002, 2.245826e-004, 3.539370e-002, -

© ISO/IEC 2004 — All rights reserved


Copyright International Organization for Standardization
Provided by IHS under license with ISO
No reproduction or networking permitted without license from IHS
Not for Resale

8.464621e-002, 2.442794e-003, 1.854399e-002, -3.352525e-002, -3.338418e-002, -2.231476e-002, -4.649629e-004, 2.728736e-002, 3.817161e-002, 1.738235e-002, -9.494490e-003, -3.269327e-003, -3.349515e-003, 7.698314e-003, 5.133068e-002, -4.677135e-002, -7.784394e-002, -3.948853e-002, -4.070973e-002, -1.833391e-002, -2.967924e-002, -7.850530e-002, -3.495408e-002, 3.772547e-002, -3.625233e-002, 3.030899e-002, 3.563153e-002, -4.981796e-002, -4.819102e-002, -1.812054e-002, 1.993645e-002, 6.522943e-002, 6.776510e-002, 4.446655e-002, -7.634158e-003, -7.457998e-002, -8.662886e-002, 2.923519e-002, 1.335346e-001, 7.612988e-002, -9.412009e-004, -3.068289e-002, -3.508229e-002, 3.802845e-003, -1.802014e-003, -5.275918e-002, -2.391405e-002, 4.590180e-002, 1.403224e-002, 4.784193e-002, 5.085680e-002, -5.334541e-002, -6.662312e-002, -1.946866e-002, 2.245436e-002, 6.555548e-002, 5.347178e-002, 4.069498e-002, 1.379979e-002, -2.707141e-002, -1.622081e-002, 5.542884e-002, 7.559794e-002, -1.447151e-003, -7.423251e-003, -2.510012e-002, -3.349489e-002, -4.341372e-003, 4.614909e-003, -1.425032e-002, 8.535858e-003, 6.239792e-002, 7.538040e-002, 6.225164e-002, 6.134319e-002, -3.559007e-002, -7.541020e-002, -2.051110e-002, 4.534712e-003, 1.352873e-002, 3.911153e-003, 2.007841e-002, 4.177538e-002, 4.468918e-002, 6.201865e-002, 6.305597e-002, 1.544075e-002, -6.655438e-002, -2.720625e-002, -2.387485e-002, 1.373816e-002, 4.652582e-002, 2.732009e-002, -1.976994e-002, -9.980168e-003, 4.109389e-002, 6.131418e-002, 3.127800e-002, 3.478331e-002, -1.747577e-002, -6.537777e-002, -1.924024e-002, -1.928140e-002, -3.562907e-002, -3.108216e-002, -3.322893e-002, -4.402627e-002, -4.201090e-002, -3.655601e-003, 2.373290e-002, 3.132773e-003, -5.019403e-002, -2.240198e-002, -4.654439e-003, 2.889793e-002, 5.769551e-002, 6.571787e-003, -8.034603e-002, -8.074468e-002, -7.357742e-004, -2.363106e-002, -2.530484e-002, -3.121633e-002, -1.681021e-002, -3.501892e-002, -1.153700e-002, -2.349152e-002, -3.685382e-002, 2.046910e-004, 7.622226e-003, -1.406729e-002, 1.478991e-002, 5.255021e-002, 7.385674e-002, 3.011398e-002, -4.583102e-002, -5.610263e-002, -2.846689e-002, -8.203153e-003, 3.167405e-003, -1.838542e-002, -5.970929e-002, -4.959758e-002, 1.506413e-002, -1.030530e-001, -5.533757e-002, -5.732577e-002, -1.237286e-002, 6.898133e-004, -8.805756e-004, -4.288900e-003, -1.236359e-002, 1.421254e-002, 8.893783e-003, -2.609757e-002, -4.004146e-002, -1.973472e-002, -1.644250e-002, -2.085500e-002, -5.633937e-002, -6.493942e-002, -2.862020e-002, 3.657875e-002, 3.766487e-002, -4.830620e-003, -3.320691e-002, -1.852258e-002, 4.034686e-002, -8.105382e-002, -2.846128e-002, -2.410651e-002, -1.385369e-002, 1.990245e-002, 2.503907e-002, 3.435330e-002, 2.089490e-002, -3.938912e-003, -2.271369e-002, 3.788812e-003, 4.986683e-002, 7.421340e-002, 6.001841e-002, 8.006761e-003, -3.570570e-002, -3.922533e-002, -2.919610e-002, 2.445009e-002, 4.899326e-002, 4.189819e-002, 2.080347e-002, 2.218216e-004, 2.127211e-002, 2.113282e-002, 4.166263e-002, 2.811951e-002, -1.461729e-002, -8.849340e-004, 4.313226e-002, 6.079880e-002, 4.221746e-002, -5.233319e-003, -2.785935e-002, 1.420546e-003, 5.511129e-002, 8.844646e-002, 7.387597e-002, 1.254455e-003, -5.695796e-002, -7.959330e-002, -7.297898e-002, -2.443351e-002, 3.389245e-002, 7.220871e-002, 5.132998e-002, 2.652372e-003, -2.149158e-002, 8.351157e-002, 2.887634e-002, 2.183858e-002, 1.074884e-003, -1.485801e-002, 2.123496e-002, 4.253150e-002, 3.838774e-002, -4.962180e-003, -4.930356e-002, -6.855931e-002, -2.121498e-002, 3.137836e-002, 5.716318e-002, 4.190117e-002, 1.878372e-002, 7.771906e-003, 1.098274e-002, 3.760648e-002, 5.780625e-002, 4.385884e-002, 3.263995e-003, -4.100023e-002, -5.936994e-002, 6.561154e-002, -4.147005e-002, -1.946097e-002, 1.807598e-002, -4.093895e-003, -1.169606e-003, 1.117995e-002, 2.140275e-002, 1.738693e-002, 2.740574e-003, -3.823613e-002, -4.810296e-002, -3.346710e-002, -3.342247e-002, -4.600012e-002, -3.882705e-002, -1.937990e-002, -2.067802e-003, 2.011651e-002, 3.565383e-002, 2.036494e-002, -1.239267e-002, -4.890971e-002, -5.764432e-002, 4.851539e-002, -5.454599e-002, -6.022368e-003, 1.616387e-002, 1.882336e-002, 5.932647e-003, -7.237734e-003, -4.908547e-003, 2.517734e-002, 4.054510e-002, 1.457887e-002, -2.462053e-002, -2.290323e-002, -1.350632e-002, -1.662133e-002, -7.884079e-003, 7.761534e-003, 1.562957e-002, 1.321811e-002, 1.526748e-002, 3.080601e-003, -1.768899e-002, -3.090226e-002, -2.572111e-002, 4.440860e-002, -2.550793e-002, 4.432054e-002, -1.607490e-002, 2.752011e-002, 2.001578e-002, -4.707555e-003, -2.157614e-002, -1.693670e-002, 1.474063e-002, 1.958886e-002, -1.900033e-002, -3.805206e-002, -2.893035e-002, -1.020177e-002, 2.389231e-003, 8.622926e-003, 3.142479e-004, -1.752995e-002, -3.072507e-002, -3.370457e-002, -3.114456e-002, -1.324986e-002, 1.153156e-002, 1.743263e-002, -3.408386e-002, 4.372260e-002, -3.860408e-002, 2.300030e-002, 2.657668e-002, 1.342376e-002, -5.047002e-003, -3.158142e-002, -1.676944e-002, 5.702887e-003, -1.945436e-002, -4.614750e-002, -4.549733e-002, -1.779555e-002, 1.071457e-002, 2.052555e-002, 2.106378e-002, -1.292207e-002, -3.808113e-002, -4.673353e-002, -1.770631e-002, 1.970702e-002, 3.770436e-002, -3.245352e-002, -8.947375e-002, 1.329522e-002, -3.268925e-002, 4.242665e-003, 2.481450e-002, 3.738149e-002, 3.334599e-002, -1.583286e-002, -1.466004e-002, 2.137003e-003, -6.640232e-003, -1.736790e-002, -1.221524e-002, 8.770408e-003, 4.468326e-002, 6.528637e-002, 6.621112e-002, 4.359245e-002, 1.226419e-002, -3.983322e-003, 1.658619e-002, 3.736496e-002, 4.348775e-002},
{1.181032e-002, 1.019764e-002, -6.369580e-002, 1.323201e-002, 1.918037e-002, -1.999430e-002, -2.265412e-002, 1.231597e-002, 1.621726e-002, -3.513348e-002, -4.435750e-002, 1.728723e-002, 1.325074e-001, 8.923301e-002, 1.476878e-002, -8.938481e-003, 3.679940e-002, 3.478281e-002, 6.356180e-002, 1.327251e-001, 1.351443e-002, -7.895885e-002, -4.330258e-002, 3.531899e-002, -


© ISO/IEC 2004 — All rights reserved

Copyright International Organization for Standardization
Provided by IHS under license with ISO
No reproduction or networking permitted without license from IHS
Not for Resale

5.972619e-003, 2.802839e-002, -3.347258e-002, 3.332424e-002, 6.737668e-002, 4.484759e-002, 4.474400e-002, 2.996928e-002, -1.595758e-002, -8.111967e-002, -8.878563e-002, -1.099918e-002, 5.364600e-002, -5.179890e-002, -4.655889e-002, -4.800653e-002, 1.102219e-002, 2.236462e-002, -1.333764e-002, 2.973474e-002, 1.953802e-003, -5.520608e-002, -6.985309e-002, -2.117942e-002, -1.352748e-002, 1.000218e-002, -1.349232e-002, 1.427282e-002, 4.677116e-002, 4.584783e-002, 7.183173e-002, 6.630882e-002, 1.636636e-002, -3.066460e-002, -2.328439e-002, 1.318346e-002, -2.339252e-002, -8.480861e-002, -7.895178e-002, -3.656358e-002, -4.886826e-004, -3.685044e-003, -4.446806e-002, -5.319866e-002, -2.193477e-002, 1.171657e-002, 8.782863e-003, 2.176321e-002, -1.562938e-002, -2.382521e-002, -3.856851e-003, 7.254463e-003, -2.738082e-002, -3.716677e-002, 1.520124e-002, 3.249611e-002, 1.239547e-002, -8.969790e-003, -7.936613e-003, 1.271484e-003, -1.828189e-002, -5.569543e-002, -4.910206e-002, 1.170553e-002, 2.446735e-002, -1.792096e-002, -6.317543e-002, -5.851990e-002, -2.647060e-002, 7.114619e-003, 3.751480e-002, 5.675274e-002, -7.473806e-003, -4.121811e-002, -1.821346e-003, 2.381247e-002, -3.718055e-002, -1.032356e-001, -5.898481e-002, -3.201047e-002, -3.412394e-002, -2.458710e-002, 2.662552e-002, 7.764030e-002, 5.594523e-002, -2.821322e-002, 1.900583e-002, 6.948411e-002, 4.695833e-002, -1.220625e-002, -7.221974e-002, -5.011847e-002, 1.027591e-002, 1.636056e-002, 1.755574e-002, 3.321124e-002, 4.084991e-003, -2.853352e-002, -1.174469e-002, 2.743936e-002, -5.714975e-003, -6.744523e-002, -3.977150e-002, -2.515797e-003, 1.833709e-002, 5.189999e-002, 8.763459e-002, 8.466633e-002, 3.019652e-002, -5.309047e-002, 2.574323e-002, 7.940060e-002, 7.167619e-002, 8.871624e-003, -9.934266e-002, -7.493562e-002, 2.235723e-002, 3.277755e-002, -7.954391e-004, 9.765504e-003, 2.347281e-002, -1.012612e-002, -1.897743e-002, 1.700120e-002, -8.192289e-003, -4.534545e-002, -1.022831e-002, 3.161509e-002, 5.002464e-002, 3.371623e-002, -1.655303e-002, -6.810212e-003, 1.664565e-002, -7.265117e-002, 6.348842e-003, 4.353424e-002, 6.461905e-002, 3.142503e-002, -7.239977e-002, -1.547627e-002, 1.285512e-002, 3.605336e-002, -3.452945e-003, -1.097741e-002, 4.123529e-002, 4.804304e-003, 3.038432e-003, 1.407595e-002, 1.797888e-003, -3.840856e-002, -4.059663e-002, -1.733667e-002, -1.636982e-002, -7.906606e-002, -1.139912e-001, 1.181730e-002, 5.932286e-002, 3.009078e-002, 2.718839e-002, -6.246598e-002, -5.100277e-002, -5.979727e-002, -5.503598e-002, 1.184943e-001, 7.547633e-002, 9.675636e-003, -2.235410e-002, -3.821840e-002, 2.845189e-002, 3.957853e-004, 2.963797e-002, 3.248048e-002, 3.970772e-002, 1.831234e-002, 5.811289e-003, 8.698006e-003, -2.609403e-002, -8.980393e-002, -4.959036e-002, 2.932369e-002, -1.711013e-002, 4.164359e-002, 2.984188e-002, -1.021984e-001, -2.421662e-002, -2.464089e-003, -8.880577e-002, 1.247239e-002, 4.460683e-004, -4.110376e-002, 1.772350e-002, 1.225511e-002, 2.018593e-002, -2.672962e-003, 5.226409e-002, 3.834764e-002, 5.267380e-002, 5.159202e-002, 4.483880e-002, 2.094025e-002, -1.750706e-002, -2.404237e-002, 2.795952e-002, -3.835958e-002, -9.378849e-002, 6.147337e-002, 8.961737e-002, -6.681974e-002, 1.812001e-002, 1.536673e-001, 1.360823e-001, -8.813245e-003, -1.068375e-001, -9.682421e-002, 5.762230e-003, 8.126050e-002, 3.198544e-002, -2.219013e-002, 4.971549e-002, 2.678668e-002, 2.827119e-002, 3.355171e-002, 3.238464e-002, 5.788441e-003, 7.508846e-003, 4.571057e-002, 3.912831e-002, -6.284840e-002, -8.991546e-002, 1.619535e-002, 1.684830e-002, -8.735964e-002, -4.367802e-002, 4.895872e-002, 8.124117e-002, 1.777225e-002, -4.741100e-002, -3.100233e-002, 4.289649e-002, 1.174721e-001, 4.610218e-002, -4.025389e-002, 3.600811e-002, 1.246104e-002, -4.616912e-003, -1.536724e-002, -1.532746e-002, -2.423121e-002, 6.161359e-003, 5.222554e-002, 3.140450e-002, -1.118963e-002, -1.018253e-002, 2.114025e-002, 1.830367e-002, -2.070547e-002, -1.037151e-002, 1.073303e-003, 4.639056e-003, -2.098727e-002, -2.736023e-002, 1.196266e-002, 6.690338e-002, 1.145079e-001, 6.052412e-002, -4.971701e-002, 1.841310e-002, -1.887609e-003, -3.029778e-002, -6.584886e-002, -7.505110e-002, -5.766148e-002, -2.735866e-002, 2.549693e-002, 3.012641e-002, 2.532429e-002, 1.606438e-002, 1.279173e-002, -1.879634e-004, -5.061450e-003, -7.232473e-003, -1.073809e-002, 2.694278e-002, 9.958009e-003, -2.817891e-002, -3.040637e-002, -1.850175e-002, 3.841264e-002, 1.485028e-002, -5.875685e-002, 9.183280e-003, -1.133671e-002, -4.330614e-002, -8.383353e-002, -8.548645e-002, -4.493076e-002, -1.894858e-002, 1.123242e-002, 2.279300e-002, 4.601475e-002, 4.823687e-002, 2.519151e-002, -2.794882e-002, -3.442926e-002, -2.146519e-002, -2.713090e-002, 2.660429e-002, 3.929178e-002, 1.736625e-002, -4.104293e-002, -7.799139e-002, -3.649067e-002, -1.421890e-003, -1.405524e-002, 8.461665e-003, -1.634172e-002, -3.684864e-002, -7.061304e-002, -5.405062e-002, 3.003718e-003, 2.385198e-002, -4.267354e-003, -1.165572e-002, 2.936870e-003, 3.674658e-002, 6.065665e-002, 4.401260e-002, 4.931247e-002, 2.673594e-002, 4.626891e-003, -5.070767e-003, -1.653346e-002, -3.464719e-002, -5.782297e-002, -6.709024e-002, -4.531308e-002, 1.147061e-003, 4.734264e-002, 5.634642e-003, -1.877845e-002, -1.810530e-002, -2.851377e-002, -1.408762e-002, 3.368883e-002, 2.233743e-002, -3.406017e-002, -4.834158e-002, -3.560844e-002, -1.419906e-002, 3.065537e-003, 2.847210e-003, 2.846540e-003, -1.412307e-003, 5.150999e-003, 6.876455e-003, 9.968354e-005, 4.251957e-003, 2.558140e-002, 1.949201e-002, -1.740831e-002, -3.419238e-002, 7.319340e-002, 1.021313e-002, -1.611203e-002, -3.428563e-003, 1.668141e-002, 2.971116e-002, 3.619359e-002, 2.639692e-002, 2.157965e-002, 4.023341e-002, 4.652987e-002, 3.731916e-002, 8.186285e-003, -2.499043e-002, -3.592851e-002, -2.732941e-002, -2.746570e-003, 2.052380e-002, 3.464595e-002, 3.830628e-002, 2.128582e-002, -3.621103e-002, -6.737210e-002, -

© ISO/IEC 2004 — All rights reserved


Copyright International Organization for Standardization
Provided by IHS under license with ISO
No reproduction or networking permitted without license from IHS
Not for Resale

9.074749e-002, 4.683916e-002, 4.627204e-003, -3.603942e-003, -3.273616e-003, 4.674079e-002, 4.361915e-002, 1.526916e-002, 4.572670e-002, 8.001326e-002, 2.802410e-002, -1.929647e-002, -1.591543e-002, 4.953179e-003, 1.415986e-002, 7.047453e-003, -1.007349e-004, 1.400177e-002, 2.941044e-002, 4.167128e-002, 4.126804e-002, 2.493343e-002, -2.396704e-002, -6.248266e-002, -1.176183e-001, 2.163699e-002, -9.899221e-004, 5.109892e-002, -6.101897e-004, 4.153709e-002, 3.189181e-002, -9.448861e-004, 4.617959e-002, 8.955093e-002, 7.309079e-003, -7.075948e-002, -6.841428e-002, -3.821481e-002, 3.315976e-004, 1.595219e-002, 5.621110e-003, -2.035822e-002, -4.542207e-002, -4.500897e-002, -9.922363e-003, 2.458658e-002, 2.637800e-002, -2.208223e-002, -8.454716e-002, 3.776911e-002, 1.825638e-002, 7.799775e-002, 1.296515e-002, 1.442989e-002, 2.921518e-002, 1.266759e-003, 2.036280e-002, 6.418451e-002, 2.358426e-002, -6.687824e-002, -8.070627e-002, -3.464832e-002, 5.100118e-002, 9.220739e-002, 6.894892e-002, 1.210092e-002, -4.311274e-002, -7.044941e-002, -2.806497e-002, 2.652073e-002, 3.393210e-002, -3.952122e-003, -1.622862e-002, 6.212943e-002, -2.233491e-003, -1.042307e-002, -3.849668e-002, -2.936926e-002, 7.190924e-003, -1.862901e-004, -1.327010e-002, 2.908397e-003, 3.401714e-003, -3.875923e-002, -6.504059e-002, -3.988086e-002, 8.743551e-003, 2.113130e-002, -6.466300e-003, -3.793620e-002, -5.999036e-002, -4.566900e-002, 6.698793e-004, 1.519184e-002, -3.183222e-003, -2.380825e-002, 1.922425e-002, 1.225515e-002, -4.293166e-002, -9.427025e-002, -7.815230e-002, -4.461232e-002, -2.150640e-002, 3.286702e-003, -6.820523e-003, -3.122056e-002, -1.948210e-002, -1.373560e-002, -2.301940e-002, 2.060101e-003, 2.476915e-002, 1.869988e-002, 2.325794e-004, 1.341904e-003, 1.022542e-002, 2.441173e-002, 3.319190e-002, 2.903234e-002, 6.591462e-004, -2.113461e-002, 3.891631e-002, -3.371821e-002, -5.749585e-002, -5.317276e-002, -4.239312e-002, 2.341871e-002, -1.481389e-003, -2.119038e-003, 5.722347e-003, -1.910800e-002, -2.784180e-002, -1.923929e-003, 3.460940e-003, 1.363388e-002, 2.524480e-002, 9.257218e-003, 4.903713e-003, 2.168535e-002, 3.812657e-002, 3.723744e-002, 2.804814e-002, 2.283916e-002, 1.171063e-002, -1.184215e-002, 8.388979e-002, -7.148555e-003, 5.800598e-003, 3.862337e-002, 2.821948e-002, 7.608120e-002, 3.369146e-002, -1.432736e-002, -1.299907e-002, -8.144822e-003, -2.378312e-002, -5.963143e-003, -5.545512e-003, -2.644539e-002, -2.980511e-002, -3.970640e-002, -4.253294e-002, -2.360334e-002, 3.082614e-003, 6.121793e-003, -1.242891e-003, 2.820252e-002, 3.335423e-002, 2.067029e-002},
{5.170481e-002, 2.791715e-002, -1.027987e-001, 7.243120e-002, 7.505520e-002, -3.235899e-003, 1.903885e-002, 1.134917e-001, 7.976337e-002, 3.147223e-003, -4.981024e-002, -3.547454e-002, 6.576771e-002, 3.992567e-002, -1.209629e-002, 1.503524e-002, 2.972236e-002, 1.716054e-002, -7.588067e-002, -1.086247e-002, 1.132527e-002, -7.035960e-002, -7.165443e-002, -2.266378e-002, 1.524915e-002, 3.486215e-002, -8.795475e-002, 1.652820e-003, 7.236202e-004, -6.955243e-002, -6.994720e-002, -4.205262e-002, -5.537798e-002, -6.171367e-002, -5.942102e-002, -2.453554e-002, 4.260530e-002, -1.411527e-002, -1.882173e-002, -1.480327e-002, 2.881538e-002, 6.705886e-002, -5.986831e-002, -2.056833e-002, 7.180185e-002, 1.484152e-002, -8.517684e-002, -1.282021e-001, -1.452797e-003, 2.705533e-002, -2.879233e-002, -1.129557e-002, -3.961619e-002, -4.440280e-002, 1.098619e-002, 6.009586e-002, 7.144916e-002, 5.215485e-002, 4.268659e-003, -2.379162e-002, -1.073446e-002, -3.378660e-002, -1.805252e-002, -2.496583e-002, 3.404186e-002, 9.823917e-002, 9.787827e-003, -5.476983e-002, 6.231928e-002, 1.364858e-001, 1.219542e-001, 6.647933e-002, -8.605841e-003, 1.730493e-003, 3.904442e-002, 5.942589e-002, -4.571329e-002, -7.420586e-002, -1.295872e-002, 2.585615e-002, 2.014744e-002, -2.419531e-002, -7.159084e-002, -8.007249e-002, -3.742044e-002, -1.930897e-003, -1.515830e-002, -2.019083e-002, 3.715901e-002, 8.680871e-002, 5.212492e-002, -3.277233e-002, -1.497413e-002, 5.274540e-002, 9.237458e-002, 1.030963e-001, -2.610192e-002, -4.897853e-003, 4.101395e-002, 1.339625e-001, 9.325650e-002, -7.733315e-003, -2.694299e-002, -5.849786e-002, -9.215185e-002, -1.082972e-001, -7.940663e-002, -1.548321e-002, 8.423695e-003, 2.450557e-002, -9.268388e-003, -2.557476e-002, 8.645542e-003, 3.441086e-002, 3.848186e-002, -2.123204e-002, -2.153294e-002, -3.754632e-002, -2.742489e-002, 1.168222e-003, -2.975667e-002, -1.512620e-002, -4.925628e-003, 7.449383e-002, 1.164633e-001, 1.282443e-001, 1.335639e-001, 1.030741e-001, 6.204758e-002, 2.845406e-002, 3.179318e-002, 4.193000e-002, 1.780156e-002, -1.043926e-003, -1.212460e-003, -3.179544e-002, -3.235030e-002, -1.401258e-002, -1.697847e-002, -2.523271e-002, 6.887242e-004, -6.886267e-003, -5.584744e-002, -3.734309e-002, -3.411637e-002, -1.296245e-002, -5.087385e-002, -4.070365e-002, -1.915985e-002, 1.808135e-002, 4.150351e-002, 3.448408e-002, 1.594707e-002, -1.351952e-003, 1.129336e-002, 2.504403e-002, 7.398919e-003, -7.102167e-004, 3.666681e-002, -1.232256e-002, -4.497058e-002, -2.928944e-002, -2.725062e-002, 1.437623e-002, -1.580616e-002, 2.288734e-002, -3.296291e-002, -6.138389e-002, -5.828153e-002, -6.705101e-003, -3.951757e-002, -8.767504e-002, -1.084779e-001, -8.853685e-002, -5.435082e-002, -4.361167e-002, -2.923709e-002, -1.003984e-002, 2.403936e-003, 3.710557e-003, 3.711812e-002, 1.319943e-002, 1.809778e-002, 2.510680e-003, -1.304350e-002, -2.392482e-002, -1.897298e-002, 7.506827e-002, -1.120794e-003, -1.583111e-002, 5.317200e-003, -7.059619e-002, -7.172179e-002, -2.178223e-003, -1.334199e-002, -6.397084e-002, -9.348387e-002, -7.526341e-002, -3.200507e-002, 1.229821e-002, 4.424278e-002, 2.205665e-002, -4.542472e-002, -2.594713e-002, 3.694086e-002, 2.772944e-002, 3.433772e-002, -1.972511e-003, -1.099396e-002, -7.044943e-003, 1.250960e-002, 1.463524e-001, 1.567107e-002, -1.104528e-001, 5.780943e-003, 1.711976e-002, -


© ISO/IEC 2004 — All rights reserved

Copyright International Organization for Standardization
Provided by IHS under license with ISO
No reproduction or networking permitted without license from IHS
Not for Resale

4.077340e-002, 7.372975e-003, 8.992808e-003, -2.604925e-002, -5.220617e-002, -2.391590e-002, 4.025396e-002, 9.517172e-002, 8.124974e-002, -3.022354e-002, -7.806767e-002, -1.581928e-002, 1.721368e-002, -2.763289e-002, -2.043957e-002, -4.230239e-002, -1.058345e-002, 1.960318e-002, -1.855097e-002, 7.765487e-002, 2.099477e-002, -1.156297e-001, -6.448936e-002, 4.112588e-002, 1.508641e-002, 1.920353e-002, 2.496465e-002, 2.188749e-003, -1.234923e-002, 2.377774e-002, 8.572884e-002, 1.146495e-001, 2.017647e-002, -9.179575e-002, -5.450264e-002, 3.972637e-002, 6.959257e-002, 1.090804e-003, -5.012645e-002, -9.588412e-002, -2.500682e-002, 4.012557e-002, -4.782641e-002, -1.936831e-002, 4.382990e-002, 2.504442e-002, -3.195188e-002, 4.438918e-004, 4.369560e-002, 2.191803e-002, 3.591284e-002, 1.717155e-002, 1.559633e-002, 3.836818e-002, 8.186310e-002, 6.606886e-002, -3.250853e-002, -6.085220e-002, -9.620273e-003, 4.367102e-002, 6.620913e-002, 4.756385e-002, 2.134405e-002, -4.122357e-002, -6.202306e-003, 6.216647e-002, -3.045809e-002, -3.317156e-002, 4.766129e-002, 9.543545e-002, 4.570254e-002, -2.784347e-004, 4.655189e-002, 2.263129e-002, 2.674029e-002, 9.374418e-003, 2.475709e-002, 3.393971e-002, 3.012773e-002, 6.509169e-003, -2.775833e-002, -1.224995e-002, -1.060984e-002, -1.544479e-002, -1.426077e-002, -6.319450e-003, 1.472384e-002, -1.918287e-002, -2.112117e-002, 4.731263e-002, -6.988883e-003, -4.687225e-002, -3.464895e-002, 1.976554e-002, 3.050512e-002, 1.363841e-002, 1.321950e-002, 4.025170e-003, 1.869375e-002, -1.985962e-002, 1.021235e-002, 9.384724e-003, -8.526216e-003, -1.296594e-002, 2.648724e-002, 3.034190e-002, 2.699875e-003, 1.546739e-003, 1.622145e-002, 5.740432e-003, 2.226877e-002, 2.556625e-002, -1.993892e-003, 1.756872e-002, 1.310744e-004, -4.061381e-002, -4.898361e-002, -3.106325e-002, -1.482664e-003, 1.444541e-003, 7.320034e-003, -1.103164e-002, 2.496882e-002, -3.525383e-002, 9.222430e-004, -8.293666e-003, -3.003910e-002, -1.281595e-002, 2.649417e-002, 1.374292e-002, -2.250568e-002, -5.739295e-003, 6.673302e-003, -1.583238e-002, -7.474263e-003, 2.734999e-002, 2.477911e-002, -1.188172e-002, -4.203560e-002, -6.503144e-002, -5.095583e-002, -2.832198e-002, 8.478857e-003, 2.108593e-003, 1.790150e-002, -9.837251e-003, 1.632149e-002, -2.390126e-002, -9.350295e-003, -7.464262e-003, -3.448476e-002, -3.344640e-002, -3.277808e-002, -4.065910e-002, -2.882984e-005, 2.375641e-002, -1.403644e-002, -4.716514e-002, -3.268615e-002, -2.925808e-003, 2.414563e-002, 2.060199e-002, -1.349571e-002, -3.595486e-002, -5.900794e-003, 6.696671e-002, 8.703131e-002, 1.787141e-002, 1.136196e-002, -1.172882e-003, -1.937248e-002, -2.043696e-002, -7.584337e-003, 1.115013e-002, -9.515149e-003, -2.931361e-002, -3.279532e-002, 5.457765e-003, 3.939817e-002, 1.149111e-002, -2.710051e-002, -5.298007e-002, -3.789346e-002, 5.477775e-003, 3.659524e-002, 4.149627e-002, 2.993818e-003, -2.505523e-002, -1.773225e-002, 1.214564e-002, 1.154204e-002, -2.459094e-002, -1.741127e-002, 1.819618e-002, -2.720733e-002, -3.724160e-002, 3.656986e-003, 2.393322e-002, 2.183631e-002, -1.215103e-004, 1.165561e-002, 6.670772e-002, 5.809496e-002, 6.206676e-003, -2.518088e-002, -1.975665e-002, 2.945676e-002, 7.003628e-002, 8.327870e-002, 4.704650e-002, -4.101353e-002, -9.661001e-002, -6.087658e-002, 2.130953e-002, 3.371136e-002, -3.099772e-002, -3.532086e-002, 2.085037e-002, 1.307784e-003, -5.010024e-002, -4.171547e-004, 1.583623e-002, 2.407008e-002, 5.750662e-003, 1.227073e-002, 3.978130e-002, 2.386971e-002, -1.575897e-002, -3.956174e-002, -2.439006e-002, 2.419702e-002, 4.755181e-002, 4.304058e-002, 1.053388e-002, -3.876443e-002, -6.700348e-002, -3.585901e-002, 3.343767e-002, 4.310754e-002, -2.762369e-002, 2.353084e-002, -7.944514e-003, 3.255213e-002, -2.272990e-002, -1.211769e-002, -5.945586e-004, 1.459688e-003, 3.719396e-003, 1.169220e-003, 1.121736e-002, -2.323930e-003, -3.093395e-002, -4.319672e-002, -2.645039e-002, 7.943106e-003, 2.741112e-002, 1.741731e-002, 5.801210e-004, -1.625647e-002, -2.480621e-002, 1.294347e-003, 2.829241e-002, 8.938166e-003, -4.906482e-002, -1.565602e-004, -3.417104e-002, 4.916536e-002, 2.973780e-002, -1.283137e-003, 2.411292e-003, -1.494651e-002, 1.013689e-002, 2.594238e-002, 4.713275e-003, -1.686509e-002, -1.790957e-002, -9.796829e-003, -6.655874e-003, -1.325333e-003, -1.503447e-004, -1.931520e-002, -1.339625e-002, -2.291710e-003, 5.358578e-004, 1.614966e-002, 1.041053e-002, -2.447017e-002, -6.046873e-002, -2.950953e-002, 1.208564e-002, 5.294070e-002, 3.690002e-002, -5.010321e-003, -6.371591e-003, -3.844246e-003, 2.061055e-002, 6.741605e-002, 3.279786e-002, -3.247596e-002, -3.066023e-002, 6.810297e-003, 3.321502e-002, 2.598483e-002, 2.134835e-003, -2.674993e-002, -2.260183e-002, -2.676559e-003, 1.024185e-002, 1.480660e-002, 7.545494e-003, -1.906073e-002, -3.468671e-002, -2.533554e-002, 5.639331e-002, -2.181615e-002, -2.244549e-002, -1.731756e-002, 4.430035e-003, 6.478963e-003, 1.654452e-002, 5.277947e-002, 2.864797e-002, -5.333351e-002, -6.547882e-002, -2.076267e-002, 2.517237e-002, 3.834360e-002, 2.802408e-002, -4.378078e-003, -6.488338e-004, 1.759956e-002, 6.070040e-003, 4.416105e-003, 4.430507e-003, 7.211174e-003, 1.286458e-003, -1.403456e-004, 6.053743e-002, -8.574988e-002, -5.383553e-002, -2.701523e-003, 1.505469e-002, 1.444533e-002, -3.701156e-003, 7.309479e-003, -1.340817e-002, -8.330776e-002, -9.373401e-002, -5.884275e-002, -1.505286e-002, 2.260216e-002, 3.695014e-002, 1.987623e-002, 1.258651e-002, 1.093893e-002, -4.885637e-004, 1.348122e-002, 3.430574e-002, 4.658075e-002, 3.722688e-002}
};

PCLDA basis matrix $\Psi_5^c$ [40][576]={

© ISO/IEC 2004 — All rights reserved


Copyright International Organization for Standardization
Provided by IHS under license with ISO
No reproduction or networking permitted without license from IHS
Not for Resale

{-8.518795e-002, -6.336341e-002, -4.879411e-002, -5.938034e-002, -6.298105e-002, 3.579982e-002, 5.034128e-002, 4.215426e-002,
7.286378e-002, 6.646528e-002, 2.070015e-002, -6.139893e-002, -1.023269e-001, -1.109612e-001, -6.745259e-002, -3.770130e-003,
5.539303e-002, 5.824360e-002, -8.175513e-003, -5.310457e-002, -7.836803e-003, 9.927763e-002, 2.181770e-002, -4.184399e-002, -
8.683183e-002, -6.982511e-002, -2.178152e-002, 3.058924e-003, 1.222169e-004, 6.771887e-002, 5.073175e-002, 3.518824e-002,
6.601223e-002, 6.032447e-002, 4.737280e-002, -2.445666e-003, -8.090233e-002, -1.370307e-001, -1.354776e-001, -8.432558e-002, -
2.778056e-002, 2.615238e-002, 5.107174e-003, -6.801519e-002, -5.401993e-002, 3.897032e-002, -1.679476e-002, -1.722127e-002, -
4.808087e-002, -1.705838e-002, 3.888211e-002, 6.942657e-002, 7.215749e-002, 8.117634e-002, 3.104967e-002, -2.240516e-003,
3.492085e-002, 4.600769e-002, 2.406991e-002, 5.804504e-002, -3.545666e-003, -5.129438e-002, -5.926305e-002, -4.626666e-002, -
2.210828e-002, 1.244893e-002, 2.455416e-002, -1.353017e-002, -3.285641e-002, -1.926035e-002, -2.880317e-002, 1.241302e-002, -
1.287678e-002, 3.168830e-002, 9.824499e-002, 1.059103e-001, 6.228337e-002, 4.417559e-002, -1.019311e-002, -5.940056e-002, -
1.179862e-002, 2.673033e-002, -1.969619e-002, 8.964314e-003, 4.243114e-002, -5.787793e-003, -3.803343e-002, -3.693084e-002, -
2.258783e-002, 7.216053e-003, 4.625819e-002, 5.180008e-002, 6.165531e-003, -4.304669e-002, -1.558448e-002, 2.408890e-002,
2.606558e-002, 7.649298e-002, 8.549918e-002, 2.257442e-002, -6.693140e-003, -7.989489e-003, -5.219246e-002, -9.460712e-002, -
5.159634e-002, 3.998044e-003, -2.335473e-002, -6.538440e-002, 3.261749e-003, 2.552353e-002, -1.261766e-002, -3.275600e-002, -
2.790921e-002, 7.064818e-003, 6.056071e-002, 7.608440e-002, 2.577790e-002, -3.213372e-002, 1.940534e-002, 2.270922e-002,
4.384033e-002, 3.499875e-002, -1.646651e-002, -4.659292e-002, -1.391427e-002, -3.434314e-002, -6.623781e-002, -1.004441e-001, -
7.173945e-002, -1.297024e-002, 2.012939e-002, -2.967728e-002, -2.383104e-002, 1.239859e-002, 7.150384e-003, -5.612439e-003, -
4.655357e-003, 2.094338e-002, 5.883832e-002, 7.068555e-002, 2.538858e-002, -1.094425e-002, 4.669597e-002, 3.403534e-002,
6.841683e-003, -2.350631e-002, -1.676319e-002, 4.287071e-002, 3.529413e-002, -4.035163e-002, -4.573496e-002, -5.775406e-002, -
5.216007e-002, -6.674761e-003, 8.005846e-002, 4.636501e-002, 1.793280e-002, 4.918002e-002, 3.227481e-002, 7.467996e-003, -
7.844020e-003, 3.020118e-004, 2.670864e-002, 4.819247e-002, 1.878196e-002, 9.762933e-003, 4.266803e-002, 1.927651e-002,
1.344016e-002, 1.159565e-002, 3.303045e-002, 8.972077e-002, -1.478526e-002, -8.024122e-002, -1.444213e-002, -5.025365e-002, -
1.118187e-001, -9.935195e-002, 5.693589e-002, 7.669829e-002, 2.275527e-002, 6.854721e-002, 6.517520e-002, 2.287923e-002, -
1.213192e-002, -1.969871e-002, 3.490790e-004, 1.760610e-002, -6.291874e-003, 1.035576e-002, 1.723992e-002, 3.147814e-003,
4.010114e-002, 1.379222e-002, -1.232113e-002, 4.812038e-003, -6.097160e-002, -5.839452e-002, -3.841374e-002, -7.276948e-002, -
9.325007e-002, -8.094043e-002, 1.152038e-002, 3.346797e-002, -1.802524e-002, 2.861726e-002, 5.815613e-002, 1.407461e-002, -
2.967187e-002, -4.523698e-002, -3.116733e-002, -9.515045e-003, -1.963227e-002, -4.901113e-003, -1.651276e-002, -1.239596e-002,
5.472578e-002, -1.212784e-002, -5.485916e-002, -3.152374e-002, -5.763674e-002, -6.272348e-002, -2.498634e-002, -8.229534e-003,
4.613237e-002, -3.636939e-002, -1.003793e-001, -6.792914e-002, -4.107314e-002, -1.649785e-002, 3.361157e-002, 3.076903e-002, -
1.080155e-002, -3.834898e-002, -2.894624e-002, -1.456025e-002, -2.506101e-002, -1.640675e-002, -4.080681e-002, -7.998766e-003,
4.202337e-002, -3.676599e-002, -7.274435e-002, -7.995946e-002, -6.882405e-002, -2.597893e-002, -1.320513e-002, -5.639694e-002,
1.751020e-002, -4.995078e-002, -1.423515e-001, -1.140255e-001, -3.812312e-002, -2.606697e-002, -5.114165e-003, 3.579759e-002,
2.002227e-002, -6.169855e-003, -4.272584e-003, -8.004961e-004, -2.534169e-002, -1.744697e-002, -2.168244e-002, 3.745578e-002,
1.050705e-002, -5.749594e-002, -7.629240e-002, -7.753144e-002, -5.617061e-002, -1.909963e-002, -4.736267e-002, -1.156909e-001, -
1.376866e-002, -2.192986e-002, -9.180126e-002, -9.314902e-002, -4.781945e-002, -1.813925e-002, -2.440385e-002, 1.000565e-002,
2.996742e-002, 2.294748e-002, 2.092551e-002, 1.643481e-002, -2.139334e-002, -6.531739e-003, 2.367604e-003, 6.052391e-002,
1.575573e-002, -4.027571e-002, -6.255669e-002, -4.944415e-002, -3.191990e-002, -3.670949e-002, -7.979160e-002, -1.124608e-001, -
1.609116e-002, -2.415478e-003, -4.105857e-002, -5.262421e-002, -4.357856e-002, -8.936291e-003, -1.123611e-002, -7.526592e-003,
1.938912e-002, 3.676862e-002, 3.928916e-002, 1.741819e-002, -1.563901e-002, 1.441726e-002, -8.962749e-003, 4.054341e-002,
8.134470e-002, -2.114391e-003, -5.397225e-002, -4.341516e-002, -2.679384e-002, -3.996372e-002, -8.413230e-002, -1.033213e-001, -
3.112135e-002, 9.090749e-003, -1.350455e-002, -4.609803e-002, -5.417815e-002, -1.152700e-002, 2.377856e-002, 1.486934e-002,
8.037271e-003, 2.638005e-002, 4.002329e-002, 1.565050e-002, -2.045101e-002, 3.092726e-002, -4.787363e-002, 9.318507e-003,
9.612338e-002, -3.204398e-002, -7.425245e-002, -3.544164e-002, -3.340728e-003, -1.198197e-002, -6.598068e-002, -8.700892e-002, -
4.115459e-002, 1.222381e-003, -8.539668e-003, -4.792278e-002, -8.280463e-002, -5.431700e-002, 2.914071e-002, 4.711272e-002,
7.272432e-003, 8.013462e-003, 2.751460e-002, 1.452385e-002, -2.500438e-002, 4.092318e-002, -3.889207e-002, 7.633588e-003,
4.458017e-002, -6.853542e-002, -5.506810e-002, 3.785178e-003, 1.876115e-002, 2.551829e-003, -4.819432e-002, -7.852745e-002, -
4.078513e-002, 1.688022e-002, 2.570691e-002, -2.089713e-002, -6.448516e-002, -4.632532e-002, 4.120207e-002, 6.437926e-002,
5.887388e-003, -1.033986e-002, 1.864460e-002, 1.771761e-002, -3.523246e-002, 3.613392e-002, -2.083177e-002, 4.261790e-002,


© ISO/IEC 2004 — All rights reserved

Copyright International Organization for Standardization
Provided by IHS under license with ISO
No reproduction or networking permitted without license from IHS
Not for Resale

1.679584e-002, -8.597598e-002, -7.285172e-002, -3.422479e-003, 3.285329e-002, 1.187543e-002, -3.820651e-002, -6.549183e-002, -3.465221e-002, 9.970375e-003, 3.864846e-002, 2.724609e-002, -1.488682e-002, -2.169583e-002, 2.877894e-002, 4.347931e-002, -1.589106e-002, -1.732010e-002, 3.655971e-002, 2.162409e-002, -1.550447e-002, 3.135425e-002, -1.583420e-002, 5.514611e-002, 7.780094e-003, -5.492454e-002, -5.316336e-002, -4.028542e-003, 5.219332e-002, 5.623169e-002, 1.624510e-002, -1.906707e-002, -2.014694e-002, -1.497260e-002, -1.343948e-002, -1.964827e-002, -2.522809e-002, -2.317991e-002, -6.936586e-003, -7.680647e-004, -4.422105e-002, -1.824112e-002, 5.026288e-002, 7.573429e-003, 5.074001e-003, 2.049772e-002, -4.731805e-002, 2.074147e-002, 4.558155e-002, 1.325766e-002, 6.370570e-003, 2.173974e-002, 3.248474e-002, 2.476932e-002, -1.009464e-002, -3.664536e-002, -2.093869e-002, 1.451696e-002, 3.660951e-002, 2.995822e-002, 4.484711e-003, -8.079857e-003, -1.125354e-002, -2.737249e-002, -4.671254e-002, -3.714068e-003, 3.059112e-002, -1.456288e-002, -3.169457e-004, 5.038022e-003, -5.927593e-002, 1.688281e-003, 5.181537e-002, 2.614704e-002, 2.951049e-002, 4.245475e-002, 2.977210e-002, -8.472898e-003, -4.676183e-002, -5.985275e-002, -2.148429e-002, 3.632232e-002, 6.244741e-002, 3.965011e-002, 3.907443e-003, -1.305157e-002, -2.984065e-003, -2.787548e-002, -2.764561e-002, -4.700454e-003, 9.613816e-004, -3.397851e-002, -1.787456e-002, 1.117034e-002, -3.420937e-002, 9.809475e-003, 4.122506e-002, 4.428053e-003, 4.741083e-003, 2.988232e-002, 3.847525e-002, 4.564620e-003, -2.486157e-002, -3.551315e-002, -1.489505e-002, 1.347535e-002, 1.905907e-002, -5.512810e-003, -2.054220e-002, -1.327239e-002, 9.977076e-004, -1.331471e-002, -2.230383e-002, -1.858724e-002, 6.749450e-003, -2.399814e-002, -1.910586e-002, 2.264826e-002, -2.120086e-002, 2.363585e-002, 4.498203e-002, 2.247567e-003, -1.010665e-002, 1.553049e-002, 4.107915e-002, 3.242811e-002, 7.569565e-003, -1.589875e-002, -1.191330e-002, -2.977330e-003, 3.168795e-003, -4.888238e-003, -7.416858e-003, -1.177944e-003, -7.613530e-003, -1.222395e-002, -1.759593e-002, -1.631730e-002, 2.082136e-002, -2.652342e-004, -2.691069e-003, 1.635760e-002, -4.672979e-002, 1.814431e-002, 4.226978e-002, 1.434970e-002, -1.342333e-003, -6.681340e-006, 1.423355e-002, 1.857891e-002, -8.321459e-003, -4.125687e-002, -3.147760e-002, -5.782686e-003, 2.223247e-002, 3.415960e-002, 1.567041e-002, -6.805523e-003, -1.395686e-002, -1.764848e-003, 3.432926e-003, -6.593126e-003, 2.224483e-002, -5.640249e-003, 1.212160e-002, 1.258378e-002, -4.588626e-002, 2.883352e-002, 2.780761e-002, 1.409606e-002, 9.201531e-003, -1.235278e-003, -4.922679e-003, -1.826609e-002, -4.854200e-002, -7.375149e-002, -5.528870e-002, -8.873674e-003, 4.019716e-002, 5.300341e-002, 2.319021e-002, -4.508139e-003, -1.193613e-002, 2.440530e-002, 3.009809e-002, -1.003461e-002, -3.672462e-003, -2.290557e-002, 1.670825e-003, -4.603971e-004, -1.785957e-003, 8.253662e-002},
{1.585988e-001, 3.354402e-003, -1.387044e-001, -1.204826e-001, 8.654994e-002, 4.536174e-002, 3.177066e-002, -1.557220e-003, -5.169890e-003, 3.794888e-002, 2.512423e-002, -9.293651e-002, -9.776047e-002, -3.346522e-003, 6.964248e-002, 7.209293e-002, -3.027988e-002, -1.535400e-001, -8.223081e-002, 6.873036e-002, 4.207006e-002, -2.071189e-003, 6.768912e-002, 2.892293e-002, 1.179175e-001, 1.912658e-002, -7.838298e-002, -3.190358e-002, 7.701232e-002, 1.877089e-002, 5.269821e-002, 1.258891e-002, 8.793777e-003, 3.456191e-002, 3.774160e-002, -6.532651e-002, -8.928792e-002, -2.979832e-002, 2.859676e-002, 5.214029e-002, 2.300653e-002, -4.928711e-002, -3.596366e-002, 6.677342e-002, 3.731136e-002, -1.471379e-002, 7.478101e-003, -1.360185e-002, 1.166603e-001, 4.225169e-002, -3.685714e-003, 3.243877e-002, 1.228412e-002, 4.039083e-002, 6.843810e-002, 6.736216e-003, 7.596482e-003, 3.527692e-002, 5.369361e-002, -9.986110e-003, -4.616656e-002, -5.099655e-003, 4.894901e-002, 8.451687e-002, 7.733541e-002, 1.980636e-002, -5.877233e-003, 2.847132e-002, 5.799389e-003, -1.457701e-002, -2.920412e-002, -2.637566e-002, 7.898388e-002, 3.217138e-002, 7.837151e-003, 2.487201e-002, -3.265427e-003, 8.113702e-002, 6.854462e-002, -5.401029e-003, -9.849183e-003, 4.189141e-002, 7.716633e-002, 2.983787e-002, -2.406079e-002, -1.267107e-002, 3.982760e-002, 7.561717e-002, 7.240427e-002, 2.498374e-002, -2.666142e-002, -3.350141e-002, -1.473418e-002, -1.328120e-002, -3.799589e-002, -2.918047e-002, 3.507010e-002, 2.987033e-002, 4.803928e-002, 2.822507e-002, 3.364872e-002, 8.321552e-002, 5.840748e-002, -1.373100e-002, -2.267126e-002, 1.898757e-002, 6.831957e-002, 7.795574e-002, 3.482251e-002, -6.558510e-003, -2.826145e-003, 2.092841e-002, 2.258744e-002, -5.625177e-003, -3.366260e-002, -2.192750e-002, -4.971556e-003, -1.108913e-002, -2.973799e-002, -3.287616e-002, 9.656877e-002, 9.351621e-002, 6.345420e-002, 2.060011e-002, 2.367430e-002, 3.906759e-002, 4.050005e-002, 7.084704e-003, 3.695494e-003, 9.097515e-003, 3.688137e-002, 5.195454e-002, 4.998648e-002, 5.923511e-002, 5.541297e-002, 6.433130e-002, 6.433731e-002, 4.032123e-002, 1.729189e-002, 2.083842e-002, 4.260427e-003, -1.597496e-002, -7.141778e-003, -3.266752e-002, 1.007087e-001, 5.551626e-002, 1.242137e-003, -5.882395e-003, -1.437757e-002, 1.513697e-002, 3.600768e-002, 4.458435e-002, 6.924991e-002, -1.873075e-002, -9.866887e-003, 5.799958e-002, 2.429389e-003, -1.330154e-002, 1.622299e-002, 5.115323e-002, 5.860368e-002, 3.877365e-002, 2.705658e-002, 3.739085e-002, 2.785394e-003, -1.283118e-002, 1.985350e-002, -1.978552e-002, 6.169057e-002, 3.007798e-002, -4.532002e-003, -1.597565e-002, 7.408306e-003, 2.092013e-003, -2.389843e-003, 1.821577e-002, 7.664591e-002, 1.170999e-003, -2.078861e-003, 1.087406e-001, 5.397962e-002, -2.119663e-002, -1.956282e-002, 1.294675e-002, 3.345668e-002, 3.177678e-002, 4.136660e-002, 5.115952e-002, 1.044805e-003, 5.419096e-003, 3.275367e-002, -2.249391e-003,

© ISO/IEC 2004 — All rights reserved


--`,,```,,,,````-`-`,,`,,`,`,,`---
Copyright International Organization for Standardization
Provided by IHS under license with ISO
No reproduction or networking permitted without license from IHS
Not for Resale

9.342454e-002, 8.564518e-002, 6.607427e-002, 1.467638e-002, 1.456848e-002, -5.662345e-003, -5.872663e-002, -2.253503e-002, 5.204203e-002, 1.860635e-002, -1.067205e-002, 7.853770e-002, 9.984701e-002, 5.804821e-002, 3.199280e-002, 4.114681e-002, 4.919408e-002, 5.091967e-002, 6.426540e-002, 5.550389e-002, -1.730912e-003, 2.477671e-002, 3.487643e-002, 2.661145e-002, 1.087227e-001, 9.313001e-002, 5.906900e-002, 1.679529e-002, 5.363127e-003, 1.359983e-002, -2.213900e-002, -6.540646e-003, 1.531246e-002, -2.411086e-002, -4.308390e-002, -3.243047e-003, 2.470940e-002, 6.010449e-002, 5.693484e-002, 4.657427e-002, 4.147524e-002, 5.255725e-002, 6.715836e-002, 4.351103e-002, -1.811525e-003, 3.550719e-002, 1.579492e-002, 4.251101e-002, 5.644380e-002, 3.861288e-003, -4.307818e-002, -4.714900e-002, -1.076630e-002, 1.353236e-002, -2.791914e-002, -2.135380e-002, -2.255020e-003, -1.877073e-002, -4.939291e-002, -7.127740e-002, -6.382235e-002, -2.063399e-002, 2.624275e-002, 2.218874e-002, 7.887278e-003, 3.755133e-002, 5.024070e-002, 2.249953e-002, -6.127865e-003, 1.822894e-002, -3.479058e-002, 2.688131e-002, -1.226788e-002, -7.364795e-002, -1.154930e-001, -1.195803e-001, -7.737545e-002, -2.951779e-002, -2.199603e-002, -9.948693e-003, -3.718268e-002, -9.621228e-002, -1.122671e-001, -9.308308e-002, -7.352495e-002, -6.386415e-002, -2.768396e-002, -7.246813e-003, -9.739034e-003, 2.383598e-002, 3.478572e-002, 4.514737e-003, -5.043655e-003, -9.107066e-003, -5.854361e-002, 1.743145e-003, -5.828374e-002, -7.180890e-002, -6.298921e-002, -5.549032e-002, -3.631730e-002, 2.242340e-003, 2.172843e-002, 3.834359e-002, -1.810192e-002, -8.113021e-002, -8.601119e-002, -5.936259e-002, -1.926126e-002, -2.129201e-002, -4.991758e-002, -4.059471e-002, -1.336679e-002, 2.237469e-002, 2.656076e-002, 3.813509e-003, 4.408774e-003, -1.900915e-002, -2.321659e-002, 2.169518e-003, -8.645362e-002, -6.071430e-002, -4.083571e-003, -8.207925e-004, -1.790168e-002, -2.073208e-002, -1.766318e-002, -8.900116e-003, -3.527728e-002, -5.643703e-002, -3.594717e-002, -1.606975e-002, -8.428833e-003, -3.573145e-002, -7.356479e-002, -6.271786e-002, -9.329056e-003, 3.120683e-002, 2.473127e-002, 1.116017e-002, 5.873189e-003, -7.021640e-003, 3.228305e-002, 1.886941e-002, -6.068584e-002, -7.968692e-002, -4.289311e-002, -1.417701e-002, 9.714061e-003, 6.995545e-004, 3.319061e-003, -2.122277e-002, -1.983376e-002, -2.793089e-002, 6.450756e-003, 2.595084e-002, -8.869581e-003, -4.084089e-002, -4.773570e-002, -3.360613e-002, 1.016763e-002, 3.998201e-002, 2.217609e-002, 8.633523e-003, -1.796656e-002, 3.368263e-003, 3.227889e-002, 1.770712e-002, -7.709390e-003, -9.180816e-002, -1.323404e-001, -8.235740e-002, 7.082077e-003, 5.145614e-002, 4.651340e-002, 9.686176e-003, -4.699104e-003, -4.840213e-002, -5.570887e-002, -3.638908e-002, -1.252690e-002, -7.728964e-004, 7.570306e-003, 4.535064e-003, 1.856585e-002, 3.312237e-002, 1.022881e-002, -5.009641e-003, -4.600452e-002, -1.125393e-003, -1.463643e-002, -6.270751e-003, 2.810644e-002, -4.173265e-002, -5.478926e-002, -2.192435e-002, 1.665173e-002, 2.744926e-002, -1.968361e-004, -2.974285e-002, -3.449237e-002, -3.137065e-002, -2.388259e-002, -2.173723e-002, -1.864916e-002, -1.457019e-002, -8.264255e-004, 4.757060e-003, -9.827235e-003, -8.144195e-003, -1.340522e-002, -3.372400e-002, -5.318921e-002, -5.225564e-003, -5.494555e-002, -1.250056e-002, 3.286733e-002, 8.790624e-004, -2.034785e-003, 1.597919e-002, 2.512194e-002, 1.426193e-002, -1.150812e-002, -3.255655e-002, -3.479435e-002, -1.132953e-002, 1.513008e-002, 9.585281e-003, -2.402883e-002, -3.596550e-002, -7.370481e-003, -7.730449e-003, -4.612984e-002, -4.369849e-002, -1.883855e-002, -3.894089e-002, -5.708065e-003, 1.983566e-002, -2.406457e-002, 2.658235e-002, 3.373784e-002, 7.297809e-003, -1.821822e-002, -5.870109e-003, 1.011602e-002, 1.823611e-002, 1.016387e-002, 1.098655e-003, -8.006443e-003, -1.475625e-002, -2.338915e-002, -4.109163e-002, -5.784483e-002, -4.747473e-002, -1.095592e-002, -1.171593e-002, -4.260311e-002, -3.749445e-002, -1.999668e-003, -2.326249e-003, 7.121208e-002, 3.601409e-002, 4.563844e-002, 6.106752e-002, 3.433394e-002, 2.861842e-002, -3.189086e-003, -1.954452e-002, -2.079601e-002, -1.652855e-002, -1.043202e-002, -7.841790e-003, -7.136528e-003, -1.466004e-002, -2.498322e-002, -3.903073e-002, -4.708202e-002, -3.596702e-002, -1.089341e-002, -1.840279e-003, -7.724225e-003, 6.422172e-004, 1.562972e-002, 2.961174e-002, 4.150767e-002, -2.086783e-002, 1.020765e-002, 4.130561e-002, 1.108079e-002, 2.143841e-002, 1.855496e-002, -6.847717e-003, -2.041122e-002, -2.328761e-002, -2.677474e-002, -1.884277e-002, 1.340345e-003, 1.340946e-002, 5.710417e-003, -1.087341e-002, -2.076871e-002, -2.247322e-002, -1.597474e-002, 1.338343e-002, 2.245710e-002, 2.447312e-002, 2.710502e-002, -7.650874e-003, -2.702432e-002, -5.224347e-002, -5.115148e-002, -5.416785e-003, -5.798470e-003, -1.051810e-002, 4.019845e-003, -1.133142e-002, -2.241979e-002, -2.627604e-002, -2.748578e-002, -1.541705e-002, 2.067105e-002, 4.436339e-002, 2.635730e-002, -7.837929e-003, -3.432130e-002, -3.556461e-002, -1.480379e-002, 2.977927e-002, 3.109746e-002, 2.149271e-002, 1.483482e-002, -5.345750e-002, -2.968367e-002, 1.886440e-002, -2.427042e-002, 1.183913e-002, 8.644865e-003, -2.372567e-002, -2.119591e-002, -2.316033e-002, -2.473851e-002, -3.227241e-002, -3.688154e-002, -7.443613e-003, 4.229180e-002, 5.929096e-002, 3.262037e-002, -1.952078e-002, -5.393632e-002, -5.566235e-002, -1.918805e-002, 1.730270e-002, 3.318019e-004, -1.683362e-002, 2.289404e-002, -2.543254e-002, -4.664199e-003, 2.884612e-002, 5.924970e-003, 6.980504e-002, 3.957616e-002, 6.838418e-003, -6.917333e-003, -8.682100e-003, -1.154006e-002, -1.644117e-002, -1.457323e-002, 1.712242e-002, 5.868497e-002, 6.471439e-002, 3.369390e-002, -2.764866e-002, -4.641542e-002, -4.592040e-002, -2.753990e-002, -2.068818e-002, -5.095700e-002, -3.816569e-002, 4.829713e-002, 1.728858e-002, 3.442110e-002, -1.870472e-002, -8.928487e-002, 2.101331e-002},


© ISO/IEC 2004 — All rights reserved

Copyright International Organization for Standardization
Provided by IHS under license with ISO
No reproduction or networking permitted without license from IHS
Not for Resale

{8.880562e-002, 6.846692e-002, -1.957621e-003, 1.335054e-002, 1.121396e-001, -2.929249e-002, -8.489667e-002, -9.359414e-002, -7.419744e-002, -6.555818e-002, -7.249525e-004, 8.563991e-002, 9.529419e-002, 9.087468e-002, -1.697944e-002, -8.768228e-002, -3.092302e-003, 6.052109e-002, 2.774806e-003, -3.990390e-002, 2.160046e-002, 3.754507e-002, 4.137304e-003, -1.017267e-001, 1.051506e-001, 3.305606e-002, -4.582174e-002, -1.575007e-002, 1.719473e-002, -1.013385e-001, -9.408043e-002, -9.586015e-002, -8.106007e-002, -1.022904e-001, -9.798070e-002, 1.725852e-003, 5.007049e-002, 8.021792e-002, 7.221710e-002, 5.280549e-002, 5.956659e-002, 5.898431e-002, 8.620183e-003, -4.328114e-002, -3.847297e-003, 7.439612e-004, 5.935747e-003, -5.105607e-002, 6.235905e-002, -7.666980e-003, -3.457308e-002, -1.100921e-002, -8.849133e-002, -1.005359e-001, -8.186245e-002, -9.011614e-002, -7.968640e-002, -8.047251e-002, -1.167361e-001, -4.780383e-002, 2.681300e-002, 6.958278e-002, 8.890108e-002, 8.794701e-002, 7.367292e-002, 5.881020e-002, 2.142332e-002, -2.972708e-002, -3.142494e-002, -4.044739e-002, 1.176275e-002, 4.424035e-004, 1.381048e-002, -1.358051e-002, -3.007614e-002, -6.603433e-002, -9.015297e-002, -4.702899e-002, -5.209181e-002, -6.575217e-002, -5.070850e-002, -2.880553e-002, -5.167722e-002, -5.164417e-002, 4.160395e-003, 5.093558e-002, 6.856774e-002, 6.320606e-002, 4.500256e-002, 3.526690e-002, 1.195686e-002, -2.414257e-002, -2.717086e-002, -5.413789e-002, 1.451050e-002, 7.409871e-003, -4.024009e-002, -6.467199e-002, -6.402743e-002, -4.166105e-002, 3.327886e-003, 1.095471e-002, -7.204544e-003, -2.230550e-002, 1.979133e-003, 1.983680e-002, 1.709599e-002, 1.102940e-002, -1.126938e-003, -8.350507e-003, -7.735171e-003, -1.048125e-002, -2.327889e-002, -2.717638e-002, -1.800809e-002, -6.144038e-003, -3.957874e-003, -5.265805e-002, 9.901678e-003, -2.635532e-003, -9.435398e-002, -7.895242e-002, -1.130686e-003, 7.077500e-002, 5.960512e-002, 3.510249e-002, 3.259654e-002, 2.923445e-002, 6.309416e-002, 7.828328e-002, 4.228151e-002, 4.488166e-002, 5.531467e-002, -3.274663e-003, -5.592752e-002, -8.178778e-002, -8.469297e-002, -6.787313e-002, -2.526166e-002, 2.013844e-002, 1.630628e-002, -3.547386e-002, 1.254214e-002, 9.259492e-004, -3.061422e-002, 2.496476e-002, 8.766844e-002, 8.172626e-002, 3.088133e-002, 2.275536e-002, 6.660244e-002, 6.328739e-002, 6.859393e-002, 6.112867e-002, 4.897113e-002, 2.430364e-002, 5.691965e-002, 3.488824e-002, -2.710798e-002, -7.473942e-002, -8.549133e-002, -5.663928e-002, -5.816944e-003, 3.072733e-002, 2.607057e-002, -1.243709e-002, 1.604172e-002, -5.099896e-003, 7.737675e-002, 9.586497e-002, 5.744433e-002, 2.943658e-002, 3.336830e-002, 6.807251e-002, 9.832935e-002, 7.337586e-002, 5.686772e-002, 1.553442e-002, 6.211849e-002, 4.659280e-002, 3.573266e-002, 5.440761e-002, 2.270879e-002, -2.631739e-002, -4.024582e-002, -1.921108e-002, 1.062852e-002, 3.812453e-002, 3.401112e-002, -9.995264e-004, 5.477828e-003, -2.361236e-002, 1.160269e-001, 5.459596e-002, -2.121356e-002, -2.387032e-002, 2.228275e-003, 4.664756e-002, 9.464856e-002, 9.239240e-002, 7.396753e-002, -2.238030e-002, 1.465462e-002, 8.586154e-002, 5.820129e-002, 4.343170e-002, 3.850078e-002, 1.700931e-002, 2.021760e-004, -3.095502e-003, 1.216640e-002, 3.420746e-002, 3.202258e-002, 7.068207e-003, -8.288268e-003, -4.270608e-002, 1.049877e-001, 8.870031e-003, -7.011668e-002, -5.804736e-002, 2.831289e-002, 9.414909e-002, 7.401777e-002, 3.118424e-002, 5.176063e-002, -2.075277e-002, -5.207700e-002, 3.536307e-002, 5.432525e-002, 2.997359e-002, 2.404411e-002, 2.419718e-002, 1.875096e-002, 5.928928e-003, 1.357701e-002, 2.851568e-002, 3.040230e-002, 1.979506e-002, -9.751478e-003, -3.347658e-002, 8.754029e-002, 3.289458e-003, -7.901311e-002, -8.165039e-002, 1.067380e-002, 8.235093e-002, 4.230613e-002, -1.874668e-002, 3.650674e-002, 1.214495e-002, -7.360520e-002, -7.422153e-002, -2.989710e-002, 2.091129e-003, 3.611572e-003, 1.367294e-002, 1.757652e-002, 6.609732e-003, 8.429199e-003, 1.569690e-002, 2.541969e-002, 1.973112e-002, 7.702716e-003, -1.031405e-002, 7.674632e-002, -8.007227e-003, -8.969743e-002, -1.021751e-001, -4.377845e-002, 4.915196e-002, 6.934316e-002, 3.745277e-002, 6.997403e-002, 5.483395e-002, -1.374866e-002, -6.824269e-002, -6.603831e-002, -2.884214e-002, -8.372977e-004, 1.147603e-002, 1.545125e-002, 1.339877e-003, -1.853106e-003, -7.261107e-003, 1.755896e-002, 1.353614e-002, 6.158214e-003, -2.239022e-002, 4.475232e-002, -3.726104e-002, -1.020140e-001, -1.086459e-001, -7.010028e-002, 1.773404e-005, 6.612998e-002, 6.637820e-002, 2.029647e-002, -6.947422e-003, -3.081469e-002, -2.683598e-002, -3.993286e-002, -3.303444e-002, -9.257678e-003, 1.163128e-002, 1.719614e-002, -1.687751e-003, -8.903436e-003, -1.939914e-002, 1.843440e-002, -2.186205e-003, -2.987735e-003, -3.365942e-002, -6.241627e-003, -5.515793e-002, -6.385948e-002, -5.314292e-002, -3.771074e-002, -3.176832e-003, 5.578646e-002, 7.491080e-002, 1.755187e-003, -5.654178e-002, -8.256198e-002, -6.377157e-002, -3.832813e-002, -2.118541e-002, -1.576494e-002, 9.817942e-003, 1.504431e-002, 1.678880e-003, -1.575650e-002, -2.694451e-002, 1.107881e-002, -1.079901e-002, -3.045878e-005, -2.671209e-002, -2.983601e-002, -2.990696e-002, -1.303414e-002, -2.643178e-002, -4.738425e-002, -2.521907e-002, 2.904109e-002, 6.940262e-002, 3.607397e-002, -2.369987e-002, -6.918124e-002, -7.815645e-002, -3.067652e-002, -1.293545e-002, -2.561844e-002, -1.119808e-002, 6.227558e-003, 3.459523e-003, -1.709597e-002, -2.902501e-002, 3.564458e-003, 4.167350e-004, 1.672309e-002, -9.414001e-003, -3.906492e-002, -3.177079e-002, -1.100943e-002, -2.030034e-002, -2.434974e-002, -6.098041e-003, 1.161437e-002, 2.736966e-002, 2.647177e-002, -1.278311e-002, -5.363111e-002, -6.216251e-002, -1.773974e-002, 1.726541e-002, -5.823695e-003, -1.727097e-002, -2.289231e-003, 8.480934e-003, -1.165251e-002, -1.855407e-002, 3.691665e-003, 2.047772e-002, 3.093634e-002, 8.595272e-004, -

© ISO/IEC 2004 — All rights reserved


Copyright International Organization for Standardization
Provided by IHS under license with ISO
No reproduction or networking permitted without license from IHS
Not for Resale

4.266604e-002, -1.437777e-002, 3.018314e-003, 6.187560e-003, 5.537974e-003, 4.123984e-003, 4.884109e-003, 3.167305e-003, 9.918855e-003, -1.492834e-002, -4.849887e-002, -5.824587e-002, -2.638083e-002, 5.279154e-003, -1.535422e-002, -3.626356e-002, -4.404181e-003, 2.195986e-002, -4.232377e-003, -3.746767e-003, 3.691017e-003, 1.406319e-002, 1.420008e-002, 1.919649e-003, -1.990632e-002, -9.323435e-003, 7.985995e-003, 7.995549e-003, -6.533958e-003, -1.980790e-002, -2.506218e-002, -3.337202e-002, -3.387605e-002, -2.497923e-002, -2.607335e-002, -2.961119e-002, -1.936696e-002, 3.916549e-003, -1.895070e-002, -3.378140e-002, 1.287396e-002, 4.131896e-002, 7.228278e-003, 2.479020e-003, -1.186659e-002, -9.392752e-003, -1.341855e-002, -1.307383e-004, 1.985237e-002, 2.074066e-002, 2.034745e-002, 1.601162e-002, 1.918647e-003, -1.348178e-002, -1.610144e-002, -2.541728e-002, -3.462901e-002, -3.230441e-002, -2.978680e-002, -1.324071e-002, 1.299417e-002, 1.203283e-002, -1.728195e-002, -1.252144e-002, 4.071657e-002, 4.425539e-002, 1.331078e-002, 1.260792e-002, -1.750177e-002, -1.131567e-002, -1.730106e-002, -2.815709e-003, 2.752702e-002, 1.188147e-002, 6.083801e-003, -2.603926e-003, -1.792334e-002, -3.488620e-002, -3.908795e-002, -5.209851e-002, -5.985139e-002, -6.083802e-002, -4.289251e-002, -1.153994e-002, 1.011433e-002, 2.123522e-003, -1.180625e-002, 1.243206e-002, 4.694797e-002, 2.456807e-002, 2.123016e-002, 1.331567e-002, -9.549455e-003, 1.661955e-002, -9.635473e-003, 6.238285e-003, 1.737158e-002, -1.804345e-003, -1.014915e-002, -5.025301e-003, -3.159471e-003, -2.757887e-003, 2.911668e-004, -4.624912e-003, -1.029000e-002, -1.770008e-002, -8.188833e-003, 8.661051e-003, 1.036200e-002, -7.045711e-003, -8.847874e-003, 2.014933e-002, 1.436959e-002, -1.857497e-002, 9.555940e-003, -5.063312e-003, 2.781486e-002, 4.509945e-002, -1.291769e-002, 1.264055e-002, -4.739990e-003, -2.441701e-002, -3.081177e-002, -2.353545e-002, -1.801712e-002, -1.436869e-002, -1.085253e-002, -5.166214e-003, -2.465561e-003, -2.364341e-003, 2.336230e-003, 3.525121e-003, -1.900486e-003, -1.571103e-002, -6.145140e-003, 7.077100e-003, -2.850455e-002, -5.382094e-002, -1.313564e-002, -3.629334e-002, 3.189166e-002, 5.188328e-002, -4.594345e-003, 1.524500e-002, -8.587000e-003, -3.336483e-002, -2.971512e-002, -2.250770e-002, -1.391974e-002, -1.584482e-002, -1.867004e-002, -1.318547e-002, -8.257103e-003, -4.813263e-003, 3.071769e-003, -3.003021e-003, -1.179824e-002, -1.976787e-002, -1.166216e-002, -1.259657e-002, -4.102903e-002, -2.800492e-002, 3.377195e-003, -4.630589e-002, -5.796192e-003, -4.726558e-003, -3.966277e-003, 3.287366e-002, 3.247587e-002, 3.112600e-003, 6.775678e-003, 2.685029e-002, 3.638727e-002, 3.767899e-002, 2.840775e-002, 2.544331e-002, 1.980236e-002, 1.950419e-002, 2.403875e-002, 1.253418e-002, -1.464064e-003, -5.794417e-004, -1.077560e-002, -2.590975e-003, 1.077481e-002, 4.653249e-002, 6.805343e-002, -7.604883e-003, -1.239985e-002, -3.585847e-002, -1.102564e-002, 4.642050e-002},
{8.469731e-002, 1.095471e-001, 5.651333e-002, 7.590933e-002, 1.720976e-001, 6.276656e-002, 5.908542e-002, 7.223373e-002, 9.073382e-002, 1.698002e-001, 2.538786e-001, 1.652613e-001, 8.093752e-002, 5.987168e-002, 7.107240e-004, 6.690313e-002, 9.158195e-002, -6.725272e-002, -1.859641e-002, 1.232686e-001, 5.533877e-002, -1.424231e-002, -6.741642e-002, -1.185394e-002, 3.006364e-002, 1.361083e-002, -2.402585e-002, 2.135966e-002, 7.305670e-002, -1.628906e-002, 6.595650e-002, 6.387277e-002, 7.618161e-002, 5.078267e-002, 9.380474e-002, 5.025981e-002, 1.932391e-002, 3.063877e-002, 3.961584e-002, 5.891449e-002, 3.644174e-002, -6.351333e-002, -4.926686e-002, 6.417953e-002, 1.193994e-002, -2.177829e-002, -4.421888e-002, 6.930977e-003, 8.719101e-003, -3.269878e-002, -2.974251e-002, 6.177571e-002, -1.386783e-002, -1.632462e-002, 5.055700e-002, 2.988486e-002, 4.460136e-002, 7.125633e-003, -3.000789e-002, -3.915160e-002, -4.595411e-002, 7.064309e-003, 6.425235e-002, 9.668024e-002, 6.899602e-002, -8.238739e-003, -2.050002e-002, 3.476295e-002, -2.646755e-003, -1.350841e-002, -7.407078e-003, 2.632690e-002, -3.578975e-002, -2.174336e-002, 5.927788e-002, 7.510516e-002, -3.401264e-002, 1.077396e-003, 2.042795e-002, -1.749001e-002, 1.599839e-003, 3.276695e-002, -2.543268e-002, -4.231102e-002, -7.437271e-002, -4.796033e-002, 1.719000e-002, 7.131410e-002, 6.576988e-002, 6.129689e-003, -1.148807e-002, 2.261035e-002, -2.584612e-003, 9.912470e-004, 2.060871e-003, 1.092028e-002, -3.534325e-002, 1.147087e-002, 8.483166e-002, 7.103774e-002, 1.159524e-002, 8.107943e-003, -3.569411e-003, -5.352288e-002, -4.871581e-002, 4.034452e-002, 4.235853e-002, 3.445300e-002, -3.490690e-002, -7.190097e-002, -5.094677e-002, -7.515387e-003, 1.082515e-002, -1.133714e-002, -6.507520e-003, 2.121515e-002, 6.356041e-003, 6.617152e-003, 3.397530e-003, -2.106599e-002, -7.723768e-002, -3.442692e-002, 6.134907e-002, 8.802606e-002, 3.885888e-002, 5.882642e-003, -7.638561e-004, -5.083963e-002, -7.782427e-002, -9.941092e-003, 5.489045e-002, 1.113391e-001, 6.796364e-002, -3.068620e-002, -7.698975e-002, -8.025661e-002, -6.472828e-002, -4.998073e-002, -1.967201e-002, 1.361301e-002, 2.979625e-003, 1.000132e-002, -9.240400e-003, -3.252247e-002, -1.089612e-001, -5.374331e-002, 4.412862e-002, 3.941986e-002, 5.917032e-003, -2.459126e-002, 3.641027e-003, -2.077707e-002, -5.986010e-002, -5.330601e-002, 1.218420e-002, 6.203172e-002, 7.070333e-002, 2.820351e-002, -3.706137e-002, -7.640502e-002, -8.290904e-002, -6.251473e-002, -2.479001e-002, -1.655541e-003, -9.420127e-003, 1.161663e-002, -5.559098e-003, -2.355231e-002, -1.000882e-001, -4.808187e-002, -2.397994e-002, -1.964102e-002, -3.516537e-003, -2.627138e-002, 8.510838e-003, -3.555944e-003, -2.211339e-002, -2.432270e-002, 2.311009e-002, 2.138580e-002, -3.856909e-002, -2.017554e-002, -1.872808e-002, -5.050024e-002, -7.547969e-002, -5.876549e-002, -2.026307e-002, -8.749483e-003, -4.667230e-003, 1.774020e-002, -4.881241e-003, -8.978480e-003, -


© ISO/IEC 2004 — All rights reserved

Copyright International Organization for Standardization
Provided by IHS under license with ISO
No reproduction or networking permitted without license from IHS
Not for Resale

5.031212e-002, -3.524750e-002, -2.602028e-002, 3.399159e-003, -4.404469e-002, -6.192620e-002, 1.084441e-002, -1.479759e-002, -2.268149e-002, -1.920653e-002, 2.080206e-002, 1.027447e-002, -1.037154e-001, -9.507261e-002, -1.909183e-002, -3.046519e-003, -2.497453e-002, -2.023197e-002, 6.046960e-003, 4.385644e-004, 3.321465e-004, 2.142308e-002, -4.145873e-003, 8.373241e-003, -1.370064e-002, -1.853482e-002, 6.895774e-003, 5.258328e-003, -7.522066e-002, -2.150663e-002, 3.473570e-002, -4.242774e-002, -2.070755e-002, 2.248600e-002, 2.789952e-002, 9.878089e-004, -8.632461e-002, -1.086826e-001, -3.530651e-002, 2.755007e-002, 3.160222e-002, 2.919042e-002, 2.799393e-002, -1.593545e-003, -2.468994e-003, 2.281279e-002, -1.715529e-003, -1.688999e-002, -1.140729e-003, -4.914614e-003, 1.537869e-002, -3.177422e-002, -9.394149e-002, -2.906167e-002, 3.020396e-002, -4.958646e-002, -3.030638e-002, -1.797481e-002, -4.562690e-002, -6.792553e-002, -6.056625e-002, -4.943590e-002, -4.094362e-002, 1.929487e-002, 5.569821e-002, 6.227383e-002, 2.978958e-002, -4.667017e-003, -4.251098e-003, 1.435554e-002, -2.791830e-003, -3.447502e-002, 2.697071e-002, 3.302522e-002, 9.643960e-003, -3.121802e-002, -3.676219e-002, 3.735483e-002, 7.614444e-002, -1.587094e-003, 5.505626e-003, -2.995908e-003, -5.682387e-002, -7.046071e-002, -4.028913e-002, 4.306769e-003, 5.898605e-003, 1.042789e-002, 4.165958e-002, 5.805325e-002, 1.427427e-002, -9.665890e-003, -6.294047e-003, 1.209213e-002, 1.288782e-002, -1.892480e-002, 4.456143e-002, 5.636404e-002, 2.692767e-003, -4.709461e-002, -2.720095e-002, 3.371169e-002, 5.466792e-002, 4.608820e-003, -1.388199e-002, -3.520032e-002, -7.030550e-002, -5.927901e-002, -1.329560e-002, 4.943033e-002, 6.679305e-002, 2.449868e-002, 1.048823e-002, 2.378636e-002, -4.406821e-003, -3.600639e-003, -3.550634e-003, 1.042874e-002, 2.138862e-002, 1.769075e-002, 1.950244e-002, 3.582327e-002, 8.326856e-003, -2.491689e-002, -1.927848e-002, 6.455098e-004, 2.387479e-002, 2.408742e-002, 5.177292e-003, -3.923596e-003, -3.036808e-002, -3.667955e-002, 4.803346e-003, 5.485754e-002, 7.069865e-002, 1.679246e-002, -2.457621e-002, -1.184458e-002, -1.072546e-002, 1.111950e-002, -1.403436e-002, -1.754850e-002, -2.164142e-002, -1.008289e-002, -1.777900e-002, 1.309057e-002, 1.545563e-002, -1.186280e-003, -1.697527e-002, -2.377588e-002, -8.411822e-003, 2.437534e-002, 8.281752e-003, -1.798532e-003, -7.764926e-003, -1.708513e-002, -1.894599e-002, -2.139739e-002, -1.804039e-002, -3.129386e-002, -5.237196e-002, -2.618561e-002, 4.685059e-003, 2.487522e-002, -1.123355e-002, -3.642358e-002, -5.651295e-002, -5.997266e-002, -4.002206e-002, -1.869894e-003, 4.506310e-003, -2.763147e-003, -3.992470e-003, 1.519964e-002, 2.283089e-002, 2.573389e-002, 9.358606e-003, -5.931914e-003, -2.748569e-003, -1.622734e-003, -1.968929e-002, -2.821295e-002, -2.560596e-002, -2.485856e-002, -3.449731e-002, -1.221219e-002, 2.383998e-002, 3.166697e-002, 1.472329e-002, -5.160487e-003, -3.194076e-002, -6.978795e-002, -4.502401e-002, 1.065348e-002, 9.149996e-003, -1.261978e-002, -1.693677e-002, 8.895665e-003, 3.092065e-002, 2.982712e-002, 1.759689e-002, -1.064624e-002, -1.484140e-002, -1.581188e-003, 7.842787e-003, 1.359350e-002, 1.997826e-002, 2.199963e-002, 1.612672e-002, 1.777872e-002, 3.799380e-002, 2.556556e-002, 3.976853e-002, 3.451505e-002, 5.066839e-002, -3.708463e-002, -9.566986e-002, -2.452636e-002, 3.868748e-003, -8.878772e-003, -1.368633e-002, -6.496636e-003, 8.040049e-003, 1.431787e-002, 1.121460e-002, -1.902525e-003, -1.241964e-002, -1.716495e-002, -1.619514e-002, -1.445032e-002, -8.064012e-003, 1.192969e-002, 3.001674e-002, 1.466578e-002, 1.051168e-002, 4.654820e-003, 3.333955e-002, 2.476899e-002, 7.909791e-002, -3.359177e-002, -1.123243e-001, -4.316563e-002, 9.305049e-003, 2.367146e-002, 1.179878e-002, -1.847817e-003, 5.130004e-004, 1.220317e-002, 2.126171e-002, 3.662758e-002, 4.856936e-002, 3.660238e-002, 6.021017e-003, -2.438353e-002, -3.190828e-002, -7.231170e-003, 9.369718e-003, -1.696840e-002, -3.440184e-002, -1.574247e-002, -1.274410e-002, -1.430782e-002, 3.308359e-002, -5.222415e-002, -9.550244e-002, -3.500303e-002, 7.241467e-003, 1.634868e-002, -5.822765e-003, -3.595668e-002, -4.198425e-002, -2.733248e-002, -5.864938e-004, 2.957616e-002, 4.569027e-002, 2.770105e-002, -5.470341e-003, -1.952523e-002, -2.308883e-002, -1.463518e-002, -2.164080e-002, -3.672723e-002, -4.877038e-002, 1.813162e-003, -3.932583e-002, -3.556510e-002, -8.098103e-003, -4.027311e-002, -4.818182e-002, 1.844714e-003, 2.988060e-002, 3.653641e-002, 2.117300e-003, -3.797598e-002, -5.069101e-002, -3.901699e-002, -1.721317e-002, 1.007863e-002, 1.438718e-002, -4.883115e-004, -1.808718e-002, -8.216706e-003, -7.144232e-003, -2.034047e-002, -2.018162e-002, -1.029517e-002, -1.613473e-002, 3.942254e-002, -2.160618e-002, -9.673682e-003, 6.831986e-003, -2.717173e-002, -2.656578e-002, 4.993996e-002, 6.052271e-002, 4.600441e-002, 7.862530e-003, -2.482757e-002, -2.513100e-002, -9.435604e-003, 7.212385e-003, 1.519797e-002, 1.360814e-003, -1.653115e-002, -9.807674e-003, 1.048752e-002, -7.810212e-003, -2.512396e-002, 1.486773e-002, 3.489819e-002, -1.733769e-003, 5.987763e-002, -1.588653e-003, 3.267484e-002, 3.968795e-002, -3.940089e-002, -6.701321e-002, 4.314839e-002, 6.941640e-002, 3.222177e-002, -5.880492e-003, -3.359938e-002, -2.844266e-002, -5.281478e-003, 9.730532e-003, 1.230032e-002, -1.105601e-003, -8.979671e-003, 1.549215e-002, 2.051208e-002, -2.869947e-002, -2.249223e-002, 4.557700e-002, 3.642477e-002, -2.589647e-002, 5.536949e-002, -1.436064e-002, 2.297720e-002, 4.008959e-002, -6.198360e-002, -1.392407e-001, -4.142581e-002, 1.585254e-002, -4.853688e-003, -4.337394e-002, -6.526671e-002, -6.385497e-002, -4.250434e-002, -1.317821e-002, 2.894125e-003, 3.021426e-003, 8.577877e-004, 1.164672e-002, -1.042080e-002, -5.252696e-002, -3.233316e-002, 3.075957e-002, 2.383779e-003, -4.235556e-002, 2.606470e-002, -3.671461e-002, -4.236584e-002, -7.286375e-003, -9.184193e-002},

© ISO/IEC 2004 — All rights reserved


Copyright International Organization for Standardization
Provided by IHS under license with ISO
No reproduction or networking permitted without license from IHS
Not for Resale

{-1.558049e-001, -3.851964e-002, 1.260431e-001, 2.054553e-001, 6.677753e-002, 9.074929e-002, 7.156644e-002, 4.870061e-002, 6.645609e-002, 6.044361e-002, 2.751480e-002, 8.173512e-003, -1.060892e-002, 6.207060e-003, 1.125974e-002, 1.207661e-002, -7.847610e-003, -2.458501e-002, -1.206047e-002, 5.023653e-002, 6.555715e-002, 4.747385e-003, -1.779945e-002, -1.798705e-002, -2.539049e-001, -1.514771e-001, 2.276239e-002, 7.273261e-002, 4.317599e-003, 6.786777e-002, -4.843904e-003, -1.969497e-002, 3.897000e-002, 6.016378e-002, 3.147511e-002, -3.194005e-002, -1.044989e-001, -1.173869e-001, -1.028539e-001, -7.148712e-002, -3.752066e-002, -1.418803e-002, -1.480925e-002, -4.634935e-003, -1.442733e-003, -2.836712e-002, -4.268450e-003, -2.750332e-003, -2.370779e-001, -1.491499e-001, -5.419931e-002, -5.323139e-002, 5.913761e-003, 1.934755e-002, -5.376821e-002, -5.602523e-002, -2.243427e-003, 3.505929e-002, 4.252454e-002, -1.011304e-002, -9.851891e-002, -1.343396e-001, -1.299014e-001, -9.165499e-002, -3.462733e-002, 1.755343e-002, 1.831072e-002, 1.887512e-003, -2.450080e-002, -3.090652e-002, -4.158109e-003, 6.953032e-003, -1.383137e-001, -8.711801e-002, -4.044697e-002, -3.041789e-002, 1.245522e-002, -1.988495e-002, -5.066149e-002, -4.263917e-002, -4.991543e-003, 7.593128e-003, 1.784097e-002, 4.210159e-002, -5.351604e-003, -5.956798e-002, -6.742228e-002, -3.671142e-002, 1.289763e-002, 5.577492e-002, 5.543638e-002, 2.253010e-002, -1.805277e-002, 1.337713e-003, -1.609914e-002, -1.493114e-003, 9.568651e-003, 4.832649e-002, 3.195597e-002, -1.094539e-002, -1.408575e-002, -9.106683e-003, -4.687508e-003, 2.546324e-003, 1.469240e-002, -9.291972e-003, -1.388182e-002, 1.077173e-003, 5.060711e-002, 5.422074e-002, 3.494327e-002, 4.113693e-002, 7.394979e-002, 9.737057e-002, 7.499464e-002, 2.698185e-002, -2.554025e-003, 1.516236e-002, -3.061848e-002, -1.784639e-002, 1.050166e-001, 9.710190e-002, -9.152203e-003, -7.111835e-002, -3.066338e-002, 1.152610e-002, 3.262246e-002, 3.660953e-002, 3.042457e-002, -3.677775e-002, -5.592844e-002, -1.216630e-002, 2.404188e-002, 4.553702e-002, 4.747574e-002, 4.882669e-002, 5.758576e-002, 6.966463e-002, 5.704466e-002, 2.315630e-002, 1.346522e-002, 3.669618e-002, -3.000951e-002, -6.596643e-003, 1.112097e-001, 6.162112e-002, -5.394533e-002, -7.301869e-002, -2.306352e-002, 1.501122e-002, 3.542087e-002, 1.871733e-002, -4.697785e-003, -8.227369e-002, -8.981118e-002, -2.293743e-003, 6.776242e-002, 8.216913e-002, 6.850252e-002, 5.866829e-002, 5.443370e-002, 5.828990e-002, 4.441674e-002, 1.676027e-002, 3.138415e-002, 4.859661e-002, -2.815744e-002, 4.701387e-003, 6.722084e-002, 4.303518e-002, 1.083399e-002, 1.893117e-002, 6.947025e-002, 5.927491e-002, 8.864083e-003, -1.769979e-002, -1.274290e-002, -4.272998e-002, -2.781538e-002, 5.884118e-002, 1.081737e-001, 8.635848e-002, 4.614657e-002, 2.352121e-002, 1.003998e-002, 5.052323e-003, -4.711684e-003, -1.279476e-002, 2.150177e-002, 4.441032e-002, -2.258244e-002, 1.399993e-002, 3.775298e-002, 7.499981e-002, 4.444639e-002, 3.485130e-003, 2.721719e-002, 1.054674e-002, -3.593932e-003, -7.478490e-003, -1.002698e-002, -4.193995e-002, -1.417897e-002, 8.259957e-002, 1.187073e-001, 6.959368e-002, 4.227040e-003, -4.367885e-002, -5.553675e-002, -5.081977e-002, -5.606639e-002, -4.242965e-002, 1.557387e-002, 3.707594e-002, -2.211225e-002, 6.627701e-003, 4.054236e-002, 7.446100e-002, 9.866569e-003, -4.736037e-002, -8.774368e-003, 5.523143e-003, 2.527156e-003, 4.871756e-003, 2.329557e-002, -4.327563e-003, -5.653621e-002, 2.272199e-002, 7.091950e-002, 2.957978e-002, -1.580241e-002, -6.624577e-002, -7.887496e-002, -7.624718e-002, -7.672189e-002, -4.804169e-002, 1.840868e-002, 2.231872e-002, -1.808247e-002, -1.649661e-003, 3.405267e-002, 3.426662e-002, -3.479465e-003, -2.201894e-003, 3.854944e-002, 2.306377e-002, 2.433756e-005, -1.597870e-002, 3.310371e-002, 6.334619e-002, 3.165951e-002, 3.373573e-002, 2.327242e-002, -1.662460e-002, -3.515284e-002, -4.371338e-002, -5.638402e-002, -6.514961e-002, -6.590263e-002, -4.308537e-002, 1.728752e-002, 8.436347e-003, -9.563957e-003, -1.880109e-002, 6.055084e-004, 4.457472e-003, 1.943748e-002, 3.918556e-002, 4.438103e-002, 1.938502e-002, 2.437206e-002, 1.036759e-002, 2.820127e-002, 6.476151e-002, 5.285024e-002, 3.255686e-002, 1.819951e-003, -3.673237e-002, -6.119766e-002, -3.538053e-002, -1.939549e-002, -3.417947e-002, -4.556261e-002, -3.244869e-002, 1.370027e-002, 1.033602e-003, 5.527003e-003, -1.649672e-002, -2.805445e-002, -1.552542e-002, 1.224250e-002, 2.710348e-002, 2.527434e-002, 1.107623e-002, 2.153373e-002, 2.145238e-002, 2.601556e-002, 3.589465e-002, 6.027406e-003, -1.153237e-002, -3.408412e-002, -6.327449e-002, -7.240617e-002, -2.626925e-002, 1.400107e-002, -6.407802e-003, -3.241413e-002, -2.652304e-002, 2.015105e-003, -9.113451e-004, 4.092488e-003, -1.202609e-002, -2.845855e-002, -1.952492e-002, -2.439342e-003, 1.314646e-002, 1.310012e-002, -4.689994e-004, 7.472643e-003, 1.583688e-002, 1.463448e-002, 1.608057e-002, -8.154014e-003, -3.090773e-002, -5.366468e-002, -5.611321e-002, -2.116986e-002, 1.862377e-002, 3.562215e-002, 9.281197e-003, -2.312763e-002, -1.442583e-002, 1.799713e-003, 3.874931e-003, 2.369680e-003, -2.392615e-002, -2.115593e-002, 1.690643e-003, 7.346087e-003, 6.494373e-003, -1.737159e-002, -2.251475e-002, -1.433501e-002, -7.175260e-003, 8.322800e-003, 6.876853e-003, -5.687427e-003, -3.504969e-002, -6.234589e-002, -3.215077e-002, 2.763904e-002, 5.049802e-002, 3.834752e-002, 2.954996e-003, -1.748604e-002, -6.042646e-003, -3.003963e-003, 7.219202e-003, -5.299195e-003, -4.621511e-002, 5.806144e-003, 1.734370e-002, 8.759009e-004, -1.070695e-002, -1.811868e-002, -2.164353e-002, -1.676214e-002, -7.524870e-003, 4.880489e-003, 2.320701e-003, -2.126114e-002, -4.634513e-002, -4.882925e-002, -6.155657e-003, 3.180916e-002, 3.976656e-002, 1.736250e-002, -1.419915e-002, -1.592933e-002, -1.069622e-002, -4.557460e-003, -5.393853e-005, 8.942332e-003, -4.707789e-002, -


© ISO/IEC 2004 — All rights reserved

Copyright International Organization for Standardization
Provided by IHS under license with ISO
No reproduction or networking permitted without license from IHS
Not for Resale

8.701246e-004, -7.819399e-003, -3.395880e-002, -3.489434e-002, -3.062403e-002, -8.334808e-003, 4.306343e-003, 1.219070e-002, 1.233504e-002, 3.677668e-003, -1.188202e-002, -2.100996e-002, -9.110581e-003, 1.675483e-002, 2.197289e-002, 1.250272e-002, -3.799961e-003, -1.473697e-002, -5.545790e-003, -7.940563e-003, 4.727764e-003, 1.212593e-002, 3.241841e-002, -3.305466e-002, -1.434206e-002, -2.820604e-002, -3.587920e-002, -2.153871e-002, -9.686756e-003, 3.519440e-003, 8.122740e-003, 1.837024e-002, 1.694843e-002, 1.445520e-003, -1.852195e-002, -3.124843e-002, -2.014759e-002, -4.688083e-003, -1.014944e-003, 1.869702e-003, 2.308374e-003, 1.123071e-002, 3.208595e-003, -1.935070e-003, 2.195715e-003, 1.275342e-002, 1.834298e-002, -8.428093e-003, -4.053170e-002, -6.092452e-002, -6.749903e-002, -6.058101e-002, -3.589302e-002, -5.749992e-003, 1.626583e-002, 2.269074e-002, 1.350248e-002, -6.223672e-003, -3.351467e-002, -4.434262e-002, -4.395379e-002, -2.981921e-002, -1.442469e-002, 5.289548e-004, 2.221208e-002, 2.511888e-002, 1.926611e-003, 5.449894e-003, -1.256130e-002, 1.521433e-002, -6.684989e-003, 3.965470e-003, -3.844255e-002, -4.091158e-002, -4.918131e-002, -4.305652e-002, -2.487012e-002, 1.084801e-002, 2.907898e-002, 2.600409e-002, 9.105379e-003, -1.095017e-002, -2.875669e-002, -2.853900e-002, -1.935122e-002, -3.796139e-003, 3.879673e-003, 1.271339e-002, 4.698401e-002, 2.134152e-002, 3.996170e-003, 2.311753e-003, -2.432471e-002, 7.575326e-003, -1.140840e-002, -1.864997e-002, -2.900897e-002, -1.297605e-003, 1.846440e-003, 5.143811e-003, 1.545032e-002, 2.691960e-002, 2.488929e-002, 2.003281e-002, 1.071616e-002, -8.074715e-003, -1.845406e-002, -5.206786e-003, 4.191126e-003, 1.122131e-002, 1.366639e-002, 2.230303e-002, 2.575513e-002, -1.681539e-002, 2.517463e-003, 4.123698e-003, -2.672377e-002, 7.287097e-003, 3.516237e-002, -2.623650e-002, -3.885586e-002, 3.936644e-003, 2.595235e-002, 2.217551e-002, 8.333396e-003, -2.112741e-003, -1.458176e-002, -1.143699e-002, -1.254795e-002, -1.892723e-002, -2.081771e-002, -1.121262e-002, -1.024582e-003, 2.970012e-003, 6.863101e-003, 2.000138e-003, -2.149208e-002, -3.304368e-002, 5.662768e-003, -7.311500e-003, -1.109466e-002, -1.439162e-002, 5.253286e-002, -3.709553e-002, -5.205118e-002, -5.933573e-003, 2.189500e-002, 2.153190e-002, -4.340577e-003, -1.775193e-002, -1.578197e-002, -4.859629e-003, 8.895831e-004, 1.573073e-003, -4.847414e-003, -8.105163e-003, -5.869513e-003, -1.073147e-002, 5.112940e-003, -3.343957e-003, -3.160135e-002, -1.649077e-002, 7.910991e-003, -1.244271e-002, 1.568813e-002, -2.363756e-002, 2.644993e-002, -4.969859e-002, -6.215710e-002, -1.851171e-002, 1.058115e-002, 1.916284e-002, 8.196891e-003, 1.159960e-002, 2.835011e-002, 3.774692e-002, 4.157444e-002, 4.441056e-002, 3.674398e-002, 2.401809e-002, 1.451224e-002, 1.660286e-002, 3.053383e-002, 2.504611e-002, 8.423141e-003, 9.353589e-003, 4.579595e-003, -8.674380e-003, 1.990394e-002, -2.801105e-002, 7.855346e-003, -4.155224e-002},
{-1.918811e-001, -8.136305e-002, 6.706710e-002, 9.088020e-002, -4.815141e-002, -1.574376e-002, -3.114904e-002, -6.381727e-002, -6.806762e-002, 2.585297e-002, 3.666597e-002, 2.117694e-002, 1.399211e-002, -5.833356e-003, -1.730379e-002, -1.768173e-002, -1.604454e-002, 5.640918e-002, 8.368924e-002, -1.265937e-003, -8.154376e-002, 2.144629e-003, 1.839055e-002, -2.679643e-003, -1.571350e-001, -5.104200e-002, 7.339629e-002, 6.674400e-002, -3.826095e-002, 1.716036e-002, -1.158717e-002, -3.092948e-002, -6.673967e-002, -4.894049e-003, 6.440332e-003, -3.569317e-003, -1.034114e-002, -1.838165e-002, -2.836690e-002, -3.042929e-002, -4.091448e-002, -3.408717e-002, 3.464311e-003, 8.762649e-004, -4.747137e-002, 2.921924e-002, -3.614002e-003, -4.703099e-003, -9.332040e-002, -1.492963e-002, 4.843416e-002, -4.510931e-003, -4.978249e-003, 3.322709e-002, 2.659805e-002, 2.079458e-002, -2.988853e-002, -2.707842e-002, 1.499759e-003, -2.568565e-002, -1.577980e-002, -2.665401e-002, -4.711721e-002, -6.482466e-002, -8.363615e-002, -7.811978e-002, -4.364316e-002, -1.602157e-002, -8.612897e-003, 2.758090e-002, -2.324995e-002, -5.073276e-003, -4.802725e-002, -8.319058e-003, -5.845070e-004, -2.192774e-002, 1.985677e-002, 5.596178e-002, 8.456123e-002, 7.408858e-002, 3.362917e-002, -6.673837e-003, 1.095057e-002, -1.196638e-002, -1.755102e-002, 1.098298e-002, 1.372306e-002, -5.196968e-003, -3.204472e-002, -4.732471e-002, -3.514489e-002, -1.129407e-002, 1.093786e-003, -4.377199e-003, -4.410706e-002, 1.421889e-002, -2.882517e-002, -2.395629e-002, -1.897500e-002, -1.245709e-003, 2.780689e-002, 5.811062e-002, 9.058846e-002, 8.221043e-002, 6.557420e-002, 4.224702e-002, 3.192611e-002, 1.341505e-002, -5.324358e-004, 2.798025e-002, 5.847762e-002, 6.074422e-002, 4.246716e-002, 1.781029e-002, 4.927933e-003, 5.646076e-003, -1.539665e-002, -3.826242e-002, -3.140393e-002, 1.864634e-002, -3.518826e-002, -2.580819e-002, 9.434820e-004, 4.575926e-003, -5.768838e-003, 1.687232e-002, 6.908911e-002, 7.730225e-002, 3.264312e-002, 2.857038e-002, 5.859532e-002, 8.288565e-003, -3.658495e-002, 5.565322e-003, 6.189156e-002, 8.340181e-002, 5.808952e-002, 1.414535e-002, -1.362161e-002, -2.919804e-002, -3.965555e-002, -3.843421e-002, -1.240661e-002, 1.048400e-002, -5.225293e-002, -1.836524e-002, 4.950467e-003, -5.184035e-003, 7.118255e-004, -1.781402e-002, 3.974863e-002, 6.790878e-002, 2.128066e-002, -2.974460e-002, 2.548715e-002, 8.738124e-003, -7.152981e-002, -7.784119e-002, -4.677807e-002, -2.686610e-002, -3.659266e-002, -6.052311e-002, -5.831874e-002, -4.407930e-002, -1.694440e-002, -1.970702e-002, 5.804853e-003, -1.707481e-003, -2.788847e-002, -5.959666e-003, -1.244553e-002, 2.739175e-002, 8.901529e-002, -7.884677e-003, -5.427093e-002, -6.010032e-003, 3.858885e-002, 1.068102e-002, 1.458670e-002, 3.002418e-003, -4.718843e-002, -5.170780e-002, -4.599002e-002, -4.738787e-002, -5.225056e-002, -4.669604e-002, -3.290872e-002, -1.569738e-002, 5.452347e-003, -5.828714e-003, 7.528255e-003, -2.835888e-002,

© ISO/IEC 2004 — All rights reserved


Copyright International Organization for Standardization
Provided by IHS under license with ISO
No reproduction or networking permitted without license from IHS
Not for Resale

1.722181e-002, 2.326875e-002, -2.705803e-002, -1.926278e-003, 5.890215e-002, -3.304314e-002, -7.645541e-002, -4.878869e-002, -3.469904e-002, -4.434542e-002, -1.981043e-002, 8.037740e-003, -1.132130e-002, 2.608612e-002, 4.551255e-002, 2.841188e-002, 1.470904e-003, 8.107959e-004, 4.512211e-003, 1.368059e-002, 2.927704e-002, 5.609594e-003, 2.293373e-003, -2.276178e-002, 4.440122e-002, 2.771768e-002, -4.754794e-002, -3.350402e-002, 3.185567e-002, -2.302349e-003, -2.254226e-002, -6.174050e-003, 8.633896e-004, -2.410439e-002, -3.200770e-002, -1.239795e-003, 1.259379e-002, 4.209744e-002, 8.313618e-002, 6.944785e-002, 3.545984e-002, 2.654296e-002, 2.436297e-002, 3.562582e-002, 4.919671e-002, 1.329765e-002, 1.519156e-002, 5.087406e-003, 3.630947e-002, 1.317004e-002, -3.756364e-002, -2.895950e-002, -3.204924e-002, -7.316095e-002, -6.076996e-002, -4.526571e-002, -6.318963e-002, -8.383688e-002, -7.622242e-002, -3.404715e-002, 7.792936e-003, 1.683363e-002, 4.197682e-002, 5.863088e-002, 4.952753e-002, 3.984170e-002, 2.060908e-002, 3.691070e-002, 4.823154e-002, -7.902079e-003, 5.426137e-003, -5.153078e-004, 2.291635e-003, 8.498722e-003, -1.431224e-002, -3.335196e-002, -7.481419e-002, -9.678708e-002, -4.426641e-002, -5.344081e-002, -1.331790e-001, -1.548378e-001, -1.107719e-001, -4.517643e-002, 3.842742e-003, 1.882390e-003, -7.203283e-003, 9.955313e-003, 3.680653e-002, 3.232462e-002, 7.498639e-003, 3.072748e-002, 3.416061e-002, -3.283584e-002, -2.266163e-002, -2.313455e-002, -1.655556e-002, 9.135714e-003, -4.065258e-003, -4.802256e-002, -7.871266e-002, -5.878571e-002, 1.872690e-002, 8.701078e-003, -6.629881e-002, -9.304628e-002, -7.328793e-002, -2.008005e-002, 2.393800e-002, 2.604267e-003, -4.504415e-002, -3.098641e-002, 8.326154e-003, 7.319816e-003, -8.997555e-003, 1.862605e-002, 2.823849e-002, -4.242633e-002, -3.919859e-002, -4.885813e-002, -8.101598e-002, -2.739499e-003, 8.564432e-003, -3.929524e-002, -8.085095e-002, -6.906210e-002, -2.961453e-003, 7.942604e-003, -2.206200e-002, -4.611359e-002, -2.510314e-002, 4.138420e-002, 8.582115e-002, 3.714763e-002, -5.379252e-002, -4.424047e-002, -2.956457e-003, -1.343835e-002, -2.204802e-002, 1.505752e-002, 3.086133e-002, -2.543787e-003, -4.690954e-003, -1.570898e-002, -1.295448e-001, 2.647283e-002, 6.308097e-002, 8.072879e-003, -6.877378e-002, -7.369538e-002, -2.295407e-002, 1.670859e-002, 1.374962e-002, -9.513799e-003, -6.700264e-003, 3.716823e-002, 6.816671e-002, 1.620885e-002, -4.321222e-002, -1.718245e-002, 1.752039e-002, -1.768915e-002, -3.357161e-002, 5.530935e-003, 2.771589e-002, 4.602777e-002, 5.545094e-003, -8.567652e-004, -9.679432e-002, 5.736276e-002, 8.500177e-002, 2.497583e-002, -2.539584e-002, -4.811120e-002, -2.428281e-002, 1.727944e-002, 1.830411e-002, 1.744488e-002, 2.405237e-002, 3.052665e-002, 2.872676e-002, -2.578589e-002, -5.678199e-002, -1.595072e-002, 1.404881e-002, -1.725353e-002, -3.539844e-002, -6.872112e-003, 1.632011e-002, 6.263251e-002, -1.361928e-002, -2.356552e-002, -7.110118e-002, 4.819107e-002, 8.593151e-002, 4.293778e-002, -1.762942e-002, -4.571318e-002, -3.175546e-002, -2.328518e-003, 7.632609e-003, 3.806869e-002, 7.149670e-002, 8.617716e-002, 6.671590e-002, 1.269855e-002, -4.803649e-002, -3.955438e-002, -1.737747e-002, -2.712006e-002, -3.116395e-002, -1.341406e-002, 8.675145e-004, 4.220587e-002, -1.283924e-002, -4.787730e-002, -5.484189e-002, 3.430428e-002, 7.072441e-002, 5.006638e-002, 2.780518e-002, 2.504664e-002, 3.900921e-002, 6.096773e-002, 7.616284e-002, 6.347204e-002, 3.255102e-002, 4.119587e-003, -1.607853e-002, -1.054271e-002, -2.119344e-002, -4.890971e-002, -4.863704e-002, -3.199284e-002, -1.495811e-002, -2.072543e-002, -1.559561e-002, 1.083709e-002, 1.784691e-003, -4.433309e-002, -2.080264e-002, 4.545930e-002, 6.172614e-002, 3.014926e-002, 9.639085e-004, 1.440489e-002, 4.632476e-002, 7.095907e-002, 8.250707e-002, 6.648859e-002, 2.607721e-002, -1.049608e-002, -7.942349e-003, 3.584711e-002, 2.062391e-002, -4.587287e-002, -5.166019e-002, -1.089822e-002, 1.177508e-002, -2.253630e-003, -3.307206e-002, -2.920254e-003, 1.388702e-002, -3.541428e-002, -2.046146e-002, 2.838541e-002, 3.511539e-002, 5.454285e-003, -1.934833e-002, 3.856735e-003, 4.760853e-002, 8.283046e-002, 8.780050e-002, 5.727383e-002, 1.053784e-002, 2.712590e-003, 4.718366e-002, 9.460250e-002, 5.791394e-002, -1.958885e-002, -1.978089e-002, 1.557413e-002, 2.604223e-002, 1.779654e-002, -2.301809e-002, -1.797691e-002, 2.888869e-004, -1.702962e-002, -4.787852e-002, -1.913811e-004, 7.025338e-003, -2.073819e-003, 5.225294e-003, 4.059275e-002, 8.046404e-002, 1.025534e-001, 7.970980e-002, 2.050122e-002, -2.524539e-002, -1.325814e-002, 4.675168e-002, 8.170373e-002, 5.887424e-002, -5.459137e-003, -3.215946e-003, 1.364964e-002, 6.243908e-003, 5.481540e-003, -2.585598e-003, -8.241324e-003, -2.146443e-002, -1.474850e-002, -6.724779e-002, -1.262395e-002, -7.414003e-003, -2.083051e-002, -5.188117e-003, 3.300859e-002, 6.005093e-002, 7.272007e-002, 4.171666e-002, -2.088364e-002, -5.855205e-002, -3.475753e-002, 1.437252e-002, 4.369703e-002, 3.228418e-002, -7.349224e-003, -1.696420e-002, -1.340961e-002, -2.557104e-002, -2.549055e-002, 1.867850e-002, 2.070671e-002, -3.742632e-004, -1.158104e-002, -6.627125e-002, 9.715622e-003, 2.231767e-002, -1.258386e-002, -5.447670e-003, 1.881799e-002, 3.631796e-002, 4.341328e-002, 2.541725e-002, -1.417181e-002, -3.122470e-002, -1.554494e-002, 3.758790e-003, 1.123247e-002, 1.153290e-002, -4.526762e-003, -1.633720e-002, 5.002365e-003, -1.701316e-002, -2.012739e-002, 2.519432e-002, 3.041010e-002, 1.485148e-002, -1.816379e-002, -4.593757e-002, 2.628005e-002, 5.612671e-002, 3.286417e-002, 2.610853e-002, 4.299683e-002, 6.983191e-002, 8.516499e-002, 7.137082e-002, 5.839843e-002, 5.254453e-002, 3.930218e-002, 3.274654e-002, 2.493204e-002, 2.331794e-002, 1.238568e-002, 1.303437e-002, 5.090900e-002, 3.029231e-002, 1.886717e-002, 1.695880e-002, 9.539612e-003, -9.230063e-003, -3.898282e-002},



--`,,```,,,,````-`-`,,`,,`,`,,`---

© ISO/IEC 2004 — All rights reserved

Copyright International Organization for Standardization
Provided by IHS under license with ISO
No reproduction or networking permitted without license from IHS
Not for Resale

{-9.041672e-002, -8.094370e-002, -2.987109e-002, -5.522812e-002, -9.184993e-002, -8.851816e-002, -1.033366e-001, -6.435512e-002, -1.568706e-002, -6.166530e-002, -1.181265e-001, 5.597974e-003, -1.634981e-002, -6.720826e-002, -2.415975e-003, 2.468001e-002, 6.074758e-003, 3.843880e-002, 6.658123e-002, 7.177424e-002, 5.350291e-002, 1.883788e-002, -2.472182e-002, -2.116441e-002, -8.229406e-002, -5.196712e-003, 2.523749e-002, -3.040519e-002, -4.200911e-002, -2.588270e-002, -3.833757e-002, 1.239584e-003, 2.014989e-002, 5.843945e-003, -1.193165e-001, 5.638810e-003, 3.212872e-002, -5.726006e-002, -1.277640e-001, -1.735139e-001, -1.701510e-001, -9.262139e-002, -1.569607e-002, 8.196273e-003, -8.892690e-003, -1.318639e-002, -1.401597e-002, -1.186963e-003, 5.004646e-002, 7.320415e-002, 2.365766e-002, -2.914907e-002, 1.328701e-002, 1.636096e-002, 2.483495e-002, 6.305567e-002, 5.010747e-002, 3.800943e-002, -7.788720e-002, -7.887870e-002, 4.478205e-002, 6.026566e-002, 2.205561e-002, -2.205220e-002, -4.062864e-002, -1.653761e-002, 1.350083e-002, -1.178696e-002, -5.336441e-002, -3.639793e-002, -2.426301e-003, 1.366935e-002, 6.230492e-002, 2.375104e-002, -4.838515e-002, -2.812103e-002, 3.167352e-002, 1.753536e-002, 4.727247e-002, 7.368263e-002, 4.651360e-002, 1.367494e-002, -1.074213e-002, -1.005695e-001, -4.068920e-002, 2.700281e-002, 5.702731e-002, 5.260065e-002, 3.781473e-002, 2.785894e-002, 2.575914e-002, -2.255976e-002, -5.948396e-002, -2.651151e-002, 1.357902e-002, 6.083374e-003, -3.415803e-002, -8.272003e-002, -7.063585e-002, 1.645041e-002, -9.869997e-003, -1.796660e-002, 2.127449e-002, 4.281452e-002, 3.054968e-002, -2.462268e-002, -2.412798e-002, -1.950084e-002, -6.168626e-002, -5.028799e-002, -2.755837e-002, -1.285990e-002, -6.702670e-003, -1.416607e-005, 1.484994e-002, -1.539569e-002, -3.848756e-002, -8.286587e-007, 2.974079e-002, -3.935228e-003, -9.361741e-002, -9.069288e-002, 1.506820e-002, 2.756959e-002, -7.819175e-002, -3.778324e-002, 1.844680e-002, 2.467723e-002, 2.375503e-002, -1.826293e-002, -7.508433e-002, -2.043571e-002, 7.458678e-003, -2.661587e-002, -3.820361e-002, -3.861587e-002, -2.753895e-002, -3.715768e-003, 1.755163e-002, 1.904789e-002, -2.738658e-003, 1.943719e-002, 2.818723e-002, -1.842249e-002, -9.039573e-002, -2.050922e-002, 8.405413e-002, -9.887714e-003, -5.785353e-002, 1.592480e-002, 1.896148e-002, 3.784482e-003, 3.687503e-002, 4.909058e-002, -3.159312e-002, -5.777175e-002, 2.533066e-002, 1.527931e-002, -1.208613e-002, -3.040476e-002, -3.037184e-002, -1.688106e-003, 3.289686e-002, 3.594290e-002, 1.741366e-002, 3.527126e-002, 2.108370e-002, -6.155627e-003, -4.125926e-002, 4.871636e-002, 8.246343e-002, 1.284216e-003, 1.890717e-002, -4.579994e-003, -7.150774e-002, -6.682214e-002, -3.476140e-002, 8.779279e-003, 1.641981e-002, 1.609486e-002, 7.491165e-002, 6.028114e-002, -4.205852e-003, -3.794824e-002, -3.246071e-002, 1.384920e-002, 5.013640e-002, 4.292288e-002, 2.440549e-002, 2.498543e-002, 9.271032e-003, 1.437677e-002, 2.141037e-002, 9.837560e-002, 7.982552e-002, 5.580599e-002, 9.504162e-002, 2.661947e-003, -6.793552e-002, -6.567195e-002, -2.617844e-002, -3.429846e-002, -6.319505e-003, 8.633323e-002, 1.524019e-001, 1.170060e-001, 4.596677e-002, -8.625986e-003, -1.207497e-002, 3.766728e-002, 4.989846e-002, 3.416940e-002, 1.402169e-002, 1.540202e-002, -2.296316e-003, 2.671881e-002, 6.341539e-002, 1.039654e-001, 6.252339e-002, 1.071926e-002, 7.313336e-003, 9.416710e-004, -1.268128e-002, -2.824319e-002, -2.254695e-002, 1.517898e-002, 1.345832e-002, 8.278781e-002, 1.427519e-001, 1.077250e-001, 4.693000e-002, 5.883252e-003, 5.467112e-003, 4.611797e-002, 3.733551e-002, 2.155037e-002, -4.073220e-003, 2.061576e-003, 2.998953e-003, 1.581727e-002, 6.149142e-002, 6.564298e-002, 3.366933e-002, -3.815532e-003, -3.229454e-002, -2.646997e-002, 1.180651e-002, 2.125640e-002, -3.881627e-003, 4.445947e-002, 5.524612e-002, 6.596512e-002, 7.650303e-002, 4.587642e-002, -8.727845e-003, -2.099374e-002, 1.393438e-002, 4.503790e-002, 1.978004e-002, 3.414705e-003, -2.152144e-002, -2.223999e-003, -4.734077e-003, -1.646597e-003, 2.178563e-002, 2.160313e-002, 4.583750e-003, 3.434110e-003, 3.299825e-003, 1.708760e-002, 4.561226e-002, 2.004265e-002, -1.598391e-002, 1.086604e-002, 2.475312e-002, 2.790911e-002, 1.332862e-002, -1.007679e-002, -5.674971e-002, -5.952141e-002, -2.666512e-005, 3.111651e-002, 6.230606e-003, -5.550285e-003, -1.837245e-002, -2.481330e-005, 1.483668e-003, 5.798465e-003, -1.844422e-002, 1.013485e-003, 2.836586e-002, 4.192800e-002, 5.405775e-002, 6.298186e-002, 5.710220e-002, 1.777267e-002, -5.988401e-003, -1.956970e-002, -1.653097e-002, -8.591256e-003, -1.041412e-002, -1.549628e-002, -4.542358e-002, -5.950854e-002, -1.385722e-002, 2.212374e-002, 9.797985e-003, 8.522770e-003, -2.097158e-003, 4.919811e-003, 9.791722e-003, 2.312427e-002, -6.587617e-002, -1.039717e-002, 4.686277e-002, 4.825636e-002, 2.393178e-002, 2.521924e-002, 4.615244e-002, 4.304124e-002, 1.694304e-002, -1.308499e-004, -4.289580e-003, -3.325738e-003, -3.433083e-003, 7.270685e-004, -1.068053e-002, -1.720777e-002, -3.088285e-003, 1.527230e-002, 1.936120e-002, 3.207365e-002, 1.359868e-002, -3.609158e-003, -9.867328e-003, -4.058038e-003, -7.742820e-002, -1.655529e-002, -7.800061e-003, -3.473639e-002, -4.083216e-002, -3.510084e-004, 6.350256e-002, 1.013644e-001, 7.958028e-002, 4.452266e-002, 1.164987e-002, -2.364836e-002, -5.522546e-002, -3.128231e-002, 1.769510e-002, 1.918745e-002, 6.262839e-003, 7.016733e-003, 2.511600e-002, 4.304146e-002, 2.180495e-002, -3.050629e-002, -3.936073e-002, -4.087569e-002, -7.243256e-002, -1.091895e-002, -3.747830e-003, -1.044324e-002, 9.338070e-005, 3.183456e-002, 6.499644e-002, 7.732038e-002, 4.785532e-002, -5.379480e-003, -4.173430e-002, -5.356823e-002, -5.484293e-002, -2.470014e-002, 1.665190e-002, 2.368686e-002, 1.184477e-003, -3.063404e-003, 2.336243e-002, 4.414769e-002, 2.029988e-002, -3.190541e-002, -3.023568e-002, -3.391953e-002, -

© ISO/IEC 2004 — All rights reserved


Copyright International Organization for Standardization
Provided by IHS under license with ISO
No reproduction or networking permitted without license from IHS
Not for Resale

7.213349e-002, -1.714224e-002, 1.037152e-002, 5.915251e-003, 1.795023e-003, 1.203284e-002, 2.970023e-002, 3.279001e-002, 1.856413e-002, -1.198446e-002, -3.181147e-002, -3.129974e-002, -2.499069e-002, -6.653277e-003, 1.057350e-002, 1.419300e-002, -9.603418e-003, -1.294120e-002, 9.684737e-003, 2.041507e-002, 9.795612e-003, -5.152206e-003, 1.520262e-002, -6.334490e-003, -2.294941e-002, 2.360633e-002, 5.399865e-002, 4.331248e-002, 9.166445e-003, -1.126103e-002, -6.228434e-003, 4.187134e-003, 1.848191e-002, 2.281964e-002, 2.478378e-002, 2.514388e-002, 2.199672e-002, 9.558362e-003, 4.166513e-003, -1.546649e-002, -3.280523e-002, -2.428661e-002, -8.990039e-003, -1.439053e-002, 3.361932e-003, 1.207404e-002, 5.880276e-002, 1.397077e-003, 7.754281e-003, 5.480865e-002, 7.942919e-002, 6.179827e-002, 1.330858e-002, -3.579594e-002, -4.773292e-002, -3.145443e-002, -1.643916e-002, 4.166025e-003, 3.409365e-002, 4.899143e-002, 4.431204e-002, 2.022454e-002, -7.538066e-003, -4.152375e-002, -5.239726e-002, -3.293238e-002, -3.875866e-002, -4.125492e-002, -3.356343e-003, -1.077764e-002, 4.068304e-002, -2.609161e-003, 1.815763e-003, 3.940312e-002, 5.919913e-002, 4.260979e-002, 4.039231e-003, -2.641798e-002, -2.775531e-002, -1.318976e-002, 7.424809e-003, 3.025317e-002, 4.646827e-002, 5.129248e-002, 3.014288e-002, -9.641040e-004, -3.624037e-002, -6.108521e-002, -3.790980e-002, -2.423394e-002, -5.439344e-002, -3.448662e-002, -6.062731e-004, -4.315532e-002, 8.624151e-003, -9.041399e-003, -9.444185e-004, 2.840547e-002, 3.199691e-002, -4.740075e-003, -4.842577e-002, -7.428676e-002, -7.097146e-002, -5.780310e-002, -3.399916e-002, -4.157396e-003, 1.514290e-002, 1.919640e-002, 3.979890e-003, -1.808035e-002, -4.519788e-002, -4.790347e-002, -8.862333e-004, 5.776744e-003, -3.140868e-002, -1.070751e-002, 1.812375e-002, -4.342340e-002, -1.378588e-002, -2.530481e-002, 1.365611e-002, 4.987049e-002, 4.176198e-002, 1.207011e-002, -2.277229e-002, -3.845736e-002, -2.489053e-002, -4.318356e-003, 6.483578e-003, 1.912826e-002, 2.200283e-002, 1.904245e-002, 1.591521e-002, 1.508899e-003, -1.829365e-002, 3.712527e-003, 5.234392e-002, 3.687605e-002, 9.803991e-003, 3.350748e-002, 4.047244e-002, 1.795396e-002, 2.087087e-002, -1.858813e-002, -1.452602e-002, 4.111411e-002, 4.014209e-002, 6.895087e-003, -9.954799e-003, -1.533870e-002, -7.851110e-004, 1.204434e-002, 1.481190e-002, 9.825155e-003, 8.172555e-004, -2.587665e-004, 1.580658e-002, 1.963680e-002, 7.680249e-003, 3.098598e-002, 4.192341e-002, 6.570911e-003, 2.305336e-002, 3.470643e-002, 6.974698e-003, 3.679888e-002, 5.086854e-002, -1.308706e-002, -9.081473e-002, -4.405277e-002, -4.539955e-002, -7.133380e-002, -9.307085e-002, -1.006228e-001, -8.628039e-002, -7.514667e-002, -7.177432e-002, -7.469854e-002, -6.866272e-002, -4.348312e-002, -1.865327e-002, -7.478934e-003, -8.276517e-003, -2.670037e-002, -6.705293e-002, -7.358652e-002, -1.993660e-002, -3.157631e-002, -7.800546e-002, -3.704772e-002, -2.096028e-002, -5.627225e-002},
{-4.750318e-002, -1.380099e-001, -1.855234e-001, -1.628531e-001, -1.795932e-002, 2.138405e-002, 6.134386e-002, 1.067051e-001, 8.224737e-002, 5.837081e-002, -4.625785e-002, -9.562170e-002, -1.235709e-001, -1.275574e-001, -5.782697e-002, -4.755729e-002, -3.419047e-002, 1.158515e-002, -4.193723e-002, -9.316699e-002, 1.116864e-002, 4.714328e-002, 2.867510e-002, 3.925193e-002, 1.739162e-001, 1.255998e-001, 3.542662e-002, -1.841039e-002, 3.298822e-002, -2.334068e-002, 7.485831e-003, 5.908606e-002, 4.043071e-002, 5.979000e-002, 5.803830e-002, 5.258814e-002, 7.151113e-002, 7.329256e-002, 6.806402e-002, 2.487465e-002, -5.984927e-003, -1.268289e-002, -4.891203e-002, -7.335386e-002, 1.647700e-002, 2.032143e-003, -1.675640e-002, -3.038679e-003, 2.075353e-001, 1.581191e-001, 6.871019e-002, 2.464299e-002, -2.195841e-002, -6.951903e-002, -5.140536e-002, -6.095757e-004, -8.605333e-003, 1.779451e-003, 4.600142e-002, 5.153768e-002, 9.744220e-002, 1.111201e-001, 9.575616e-002, 5.114466e-002, 6.966428e-003, -1.771348e-002, -2.797779e-002, -2.351446e-002, 2.773596e-002, -8.310897e-003, -3.247740e-002, -2.744450e-002, 1.040762e-001, 5.463498e-002, 1.112529e-002, 3.665428e-003, -5.415221e-002, -9.709063e-002, -9.377548e-002, -3.194765e-002, -3.110463e-002, -4.101981e-002, 9.764294e-004, -8.175518e-003, 1.582554e-003, 3.554815e-002, 3.557647e-002, 4.943102e-003, -2.292512e-002, -2.645890e-002, -1.811155e-002, -6.012465e-005, 1.823283e-002, -1.070176e-002, -3.013157e-002, -2.817267e-002, -3.664295e-002, -3.503109e-002, 2.006719e-002, 8.854045e-003, -4.996582e-002, -6.906938e-002, -5.838342e-002, -5.970390e-003, 8.731401e-003, -1.506244e-002, -3.379973e-002, 8.889089e-003, -2.418734e-002, -4.229640e-002, -4.196429e-002, -4.793217e-002, -5.103619e-002, -3.314204e-002, -2.201264e-003, -2.512764e-003, -6.940474e-003, -6.303872e-003, -2.474016e-002, -1.676255e-002, -9.590335e-003, 3.670714e-002, 7.351221e-002, 5.086877e-003, 3.976724e-003, 6.989557e-003, -2.359951e-002, 8.472599e-003, 4.574371e-002, 3.319696e-002, -4.770195e-002, -2.912517e-002, 3.084581e-002, 3.042597e-002, 1.062778e-002, -2.435158e-004, 2.530324e-003, 1.149749e-002, 1.868480e-003, -3.404906e-002, -2.795640e-002, -1.959975e-002, -5.728679e-003, -1.824708e-003, 2.971551e-002, 6.849888e-002, 5.639298e-002, -7.047181e-003, 1.535007e-002, 3.588989e-003, -5.315524e-002, -4.120871e-002, -1.100225e-002, 1.943705e-002, -4.871889e-002, -5.233034e-002, 1.506140e-002, 4.121777e-002, 4.290821e-002, 3.532492e-002, 2.411871e-002, 2.621641e-003, -3.172222e-002, -6.742083e-002, -5.164261e-002, -2.459874e-002, 1.055251e-002, 2.839634e-002, -1.968159e-003, 4.447325e-002, 3.745302e-002, -9.814295e-003, -1.810829e-003, 1.144391e-002, 3.483950e-002, 1.900691e-002, -4.479846e-002, 8.795093e-003, 2.474926e-003, 2.246906e-002, 6.825311e-002, 1.142773e-002, -6.646800e-003, -1.078515e-002, -1.863958e-002, -3.329854e-002, -5.873553e-002, -6.739903e-002, -4.164147e-002, -1.350231e-002, 2.955306e-002, 5.534564e-002, -


© ISO/IEC 2004 — All rights reserved

Copyright International Organization for Standardization
Provided by IHS under license with ISO
No reproduction or networking permitted without license from IHS
Not for Resale

1.156503e-002, 3.286196e-002, 3.577016e-002, 1.927197e-002, 1.609269e-002, 4.166605e-002, 8.418853e-002, 4.222294e-002, -2.560497e-002, 7.016131e-003, 6.172282e-003, 3.347604e-002, 8.259325e-002, -1.230285e-003, -5.002711e-002, -4.199316e-002, -2.903292e-002, -2.129890e-002, -2.646940e-002, -2.953268e-002, -5.182630e-003, -3.182618e-003, 2.516779e-002, 8.283150e-003, -2.783133e-002, -1.612864e-002, -9.320234e-004, 1.776318e-002, -9.680788e-004, 1.333886e-002, 5.761262e-002, 1.900635e-002, -5.327483e-002, -3.136390e-002, -8.368258e-003, -9.756027e-003, 1.996262e-003, -2.676487e-002, -7.571645e-002, -7.267219e-002, -3.516796e-002, -6.331993e-003, 2.273193e-003, 2.614508e-003, 9.991551e-003, -8.181177e-003, -2.278005e-002, -4.168228e-002, -4.732390e-002, -5.863690e-002, -3.562982e-002, 7.319025e-003, 3.194425e-002, 4.792105e-002, 5.657549e-002, 9.351271e-002, 5.549017e-002, 6.194835e-002, 5.481080e-002, -3.323173e-003, -4.562793e-002, -4.277337e-002, -6.741046e-002, -7.522770e-002, -3.818431e-002, 3.580523e-003, 2.582976e-002, 2.789711e-002, 1.727639e-002, -1.303727e-002, -4.209301e-002, -2.374631e-002, -3.767036e-002, -5.562770e-002, -6.138320e-002, -3.848056e-002, -1.250307e-002, -8.223770e-003, -3.685478e-002, 9.455778e-003, 5.442036e-003, 8.372865e-003, 1.275318e-002, -1.791219e-002, -4.804212e-002, -2.863373e-002, -1.864547e-002, -2.772541e-002, -1.739849e-002, 1.982907e-002, 4.822675e-002, 3.866738e-002, 1.392210e-002, -3.180041e-003, -1.397186e-002, 6.223803e-003, 1.151112e-002, -1.566474e-002, -3.685478e-002, -2.136413e-002, 1.435911e-002, 2.064055e-002, -2.205113e-002, -1.259498e-002, -1.054699e-002, -1.071837e-002, 3.190556e-003, -1.489194e-002, -2.916532e-002, 1.239344e-002, 5.651460e-002, 4.781040e-002, 2.492549e-002, 4.214857e-002, 6.353315e-002, 4.294997e-002, 1.752716e-002, 1.298084e-002, 9.214299e-003, 1.223625e-002, 4.329980e-002, -1.716330e-002, -7.484504e-002, -6.816088e-002, -2.816926e-002, 5.231530e-004, -2.314825e-002, -5.463548e-002, -4.409782e-002, -2.109439e-002, -1.930705e-002, -4.947115e-002, -6.085848e-002, -2.432757e-002, 5.897112e-002, 8.076784e-002, 5.252700e-002, 5.666012e-002, 6.467783e-002, 3.307484e-002, 2.673977e-002, 1.935819e-002, 8.766354e-003, -5.263526e-003, 7.163357e-002, -2.137041e-003, -2.903329e-002, -1.413260e-002, 6.818731e-003, -3.290260e-003, -1.721064e-002, -5.600717e-002, -4.795930e-002, -2.047302e-002, 2.117803e-004, -9.545778e-003, -3.692379e-002, -5.057263e-002, 7.165851e-003, 5.743064e-002, 5.750740e-002, 5.862662e-002, 4.836383e-002, 2.364060e-002, 5.482040e-002, 1.651384e-002, -8.839336e-003, -3.558692e-002, 4.017312e-002, 3.620375e-004, -1.635368e-002, -1.870200e-002, -3.087243e-002, -4.144533e-002, -4.724482e-002, -6.842404e-002, -5.936579e-002, -4.706912e-002, -1.087638e-002, 2.629752e-002, 2.155333e-002, 3.216245e-003, 9.147905e-003, 3.600634e-002, 4.985920e-002, 4.638359e-002, 2.181718e-002, 1.347934e-002, 7.120009e-002, -8.230665e-004, -1.088481e-005, -2.243643e-002, 8.454061e-003, 1.742117e-002, 3.132647e-002, -3.381359e-003, -4.374323e-002, -7.597355e-002, -8.440967e-002, -6.204529e-002, -3.771295e-002, -1.650783e-002, 1.475442e-002, 3.711249e-002, 2.292284e-002, 2.207045e-002, 3.583534e-002, 5.752857e-002, 5.416899e-002, 3.093866e-002, -4.457104e-003, 1.781569e-002, 6.010831e-002, 3.750050e-004, 2.079948e-002, 1.917032e-003, 3.381889e-003, 3.834043e-002, 7.388372e-002, 5.703347e-002, -5.180855e-003, -7.172459e-002, -8.879746e-002, -7.014209e-002, -4.873770e-002, -1.434140e-002, 1.580573e-002, 2.491430e-002, 2.521363e-003, -6.797228e-003, 1.862767e-002, 5.519812e-002, 4.168261e-002, 7.769270e-003, -2.391754e-002, 1.163261e-002, 1.303322e-002, 2.840110e-003, 4.409621e-002, -9.798897e-003, -2.338344e-002, -2.601345e-002, 1.291720e-002, 3.621207e-002, 3.274374e-002, 3.334294e-003, -1.470293e-002, -2.755102e-002, -2.505533e-002, -1.087339e-002, 1.171685e-002, 1.861690e-002, -4.970697e-003, -1.522600e-002, 1.264850e-002, 4.708120e-002, 3.316478e-002, -5.569278e-003, -2.202191e-002, -2.865886e-002, -2.254669e-002, 8.465286e-004, 2.929265e-002, -4.270497e-002, -1.884121e-002, -5.377257e-002, -4.119508e-002, -9.172907e-003, 8.314380e-003, -1.112070e-002, -2.567708e-002, -4.324513e-002, -4.652220e-002, -1.761509e-002, 2.030776e-002, 2.310361e-002, 8.842791e-003, -8.294998e-003, -3.115566e-003, 2.368150e-002, 1.245782e-002, 2.150121e-003, -3.190181e-002, -6.923660e-002, -2.366769e-002, -3.039635e-002, -1.076178e-002, -3.289851e-002, 8.605781e-003, -1.665199e-002, -2.818692e-002, 1.069147e-003, 3.790463e-002, 5.278232e-002, 5.108297e-002, 3.134514e-002, 1.363273e-002, 1.498993e-002, 2.917294e-002, 2.163218e-002, 6.379361e-003, -1.594365e-002, -3.121676e-002, -1.410738e-002, 7.552035e-003, 2.789309e-002, -2.571596e-002, -3.145351e-002, -2.877654e-003, -2.942233e-002, -6.767166e-003, -9.071115e-004, -8.020385e-005, 1.219572e-002, -1.015729e-002, -1.627310e-002, 2.253139e-003, 3.244077e-002, 5.086693e-002, 3.652705e-002, -4.261268e-003, -3.245752e-002, -3.105927e-002, -2.387182e-002, -2.570738e-002, -3.702899e-002, -4.633456e-002, -3.745670e-002, 4.642236e-003, 2.478305e-002, -2.078679e-002, 2.918998e-002, -1.555910e-002, 1.744423e-003, 1.540106e-002, 1.747033e-002, -3.584273e-002, 9.749339e-003, 1.985553e-002, -1.110632e-002, -1.245154e-002, 1.151602e-002, 3.617436e-002, 2.728387e-002, -4.659043e-003, -4.286900e-002, -5.004180e-002, -2.859550e-002, -9.107505e-003, -1.357107e-002, -2.788560e-002, -2.805927e-002, -4.776665e-003, 1.737608e-003, -1.120954e-004, 3.042374e-002, -3.583819e-002, 4.039067e-002, 2.150345e-002, -5.361212e-003, -4.447228e-002, -1.674904e-003, 3.989578e-002, 3.928241e-002, 3.820188e-002, 5.120584e-002, 7.545914e-002, 7.969916e-002, 6.648705e-002, 2.710574e-002, 6.351607e-003, 2.563034e-002, 2.661769e-002, 1.870559e-002, 1.228027e-002, -7.400242e-003, -1.916737e-002, -1.618199e-002, -1.443417e-002, -1.590778e-002, -6.183985e-002, 2.023080e-002, -2.288524e-002, -8.241937e-002},

© ISO/IEC 2004 — All rights reserved


Copyright International Organization for Standardization
Provided by IHS under license with ISO
No reproduction or networking permitted without license from IHS
Not for Resale

{-1.386768e-002, -6.720481e-003, 1.005492e-002, -2.084358e-002, -7.907615e-002, -5.732049e-002, -7.909125e-002, -1.159639e-001, -8.497900e-002, -6.207186e-002, -1.220992e-001, -3.537534e-002, 3.175080e-002, 4.558400e-002, 3.596792e-002, -3.300656e-002, -6.690712e-002, -4.135659e-002, -4.609593e-002, -6.696332e-002, -6.216010e-002, -7.826738e-002, -5.152327e-002, -6.599431e-002, -8.871544e-002, -3.871044e-002, 3.079726e-002, 5.437758e-002, 1.875282e-004, 9.070029e-003, -3.555609e-002, -7.511942e-002, -6.762141e-002, -1.151250e-002, -5.576396e-002, -1.770031e-002, 4.599726e-003, -2.750683e-002, -8.636561e-002, -1.392246e-001, -1.489893e-001, -1.112756e-001, -8.349401e-002, -6.119156e-002, -3.667462e-002, -3.239773e-002, -1.399167e-002, -4.741863e-002, -5.109825e-003, 4.856632e-002, 1.108675e-001, 8.479817e-002, 5.233131e-002, 5.925172e-002, -4.523213e-003, -2.977530e-002, -3.064477e-002, 1.529815e-003, 5.233050e-002, 6.156751e-002, 7.095056e-002, 6.029967e-002, 1.059290e-002, -4.140425e-002, -6.216140e-002, -4.898572e-002, -5.278504e-002, -4.467315e-002, -1.412370e-002, 7.430483e-003, 6.083913e-003, -2.490419e-002, 8.134297e-002, 1.022374e-001, 8.861108e-002, 3.470981e-002, 4.707104e-002, 6.999237e-002, 1.365934e-002, -4.577842e-003, 1.387837e-003, -2.239375e-002, 8.187775e-002, 1.037536e-001, 1.189225e-001, 1.221285e-001, 1.053361e-001, 7.324971e-002, 4.815187e-002, 3.350567e-002, 2.033377e-003, -2.647270e-002, 5.600275e-003, 1.908683e-002, 1.524848e-002, 3.987116e-003, 8.165414e-002, 4.382894e-002, -2.855865e-002, -5.800300e-002, 1.530845e-002, 4.570578e-002, 8.207885e-004, 7.737780e-003, 2.764343e-002, -3.760354e-002, 1.110205e-002, 7.491064e-002, 8.615469e-002, 1.230233e-001, 1.415297e-001, 1.309437e-001, 1.057385e-001, 7.420287e-002, 2.343966e-002, -3.696101e-003, 2.273179e-002, 2.019872e-002, 9.185954e-003, 2.259198e-002, -1.068906e-002, -6.338962e-002, -1.128674e-001, -7.860916e-002, 1.801700e-002, 3.248284e-002, 8.964828e-003, 3.476616e-002, 6.797248e-002, -9.626850e-004, -4.134524e-002, -6.431180e-003, -2.745346e-002, 5.850592e-003, 6.178492e-002, 9.379640e-002, 8.562452e-002, 5.196907e-002, 1.440417e-002, 8.642075e-003, 2.700199e-002, 1.226191e-002, 2.215680e-003, 1.553781e-002, -6.053755e-002, -7.900036e-002, -1.009652e-001, -5.337253e-002, 2.419759e-002, 3.576790e-002, 3.461300e-002, 6.619528e-002, 1.021460e-001, 4.324642e-002, -5.523096e-002, -5.396933e-002, -9.695463e-002, -1.262865e-001, -9.062935e-002, -4.176146e-002, -1.279072e-002, -4.454632e-003, -2.282712e-003, 1.321036e-002, 2.977238e-002, 1.296126e-002, -8.178728e-003, 4.689897e-003, -1.018404e-002, -1.997339e-002, -3.960723e-002, -9.688348e-003, -2.874212e-002, -1.791298e-002, 1.009615e-003, 1.671337e-002, 2.988996e-002, 6.938341e-003, -2.602459e-002, -4.924471e-002, -7.002412e-002, -9.788042e-002, -1.173853e-001, -8.986396e-002, -4.375471e-002, -8.394689e-003, 7.983015e-003, 1.570846e-002, 2.671837e-002, 1.237087e-002, -3.739113e-003, -1.040981e-002, 2.710718e-002, -5.063449e-003, 4.750970e-003, 2.967096e-002, 2.727563e-002, -3.989597e-004, -5.990789e-002, -3.387092e-002, 1.989503e-002, 3.395119e-002, 5.226708e-002, 1.013705e-002, -3.281506e-002, -6.373474e-003, -1.895174e-002, -3.367779e-002, -1.505427e-002, 1.157012e-002, 1.761668e-002, 1.564292e-002, 2.125569e-002, 6.979342e-003, 1.834452e-003, -3.646963e-002, 1.691348e-002, -2.553334e-002, -4.780711e-002, -2.879231e-002, 2.265700e-002, -1.546601e-002, -7.466329e-002, -1.908488e-003, 8.267032e-002, 1.920811e-002, -4.878383e-002, -6.397418e-002, -5.744782e-002, -7.884089e-003, 2.991108e-002, 2.420622e-002, 1.790877e-002, 2.374456e-002, 2.099236e-002, 4.748880e-003, -2.835359e-003, -2.087050e-003, 3.402229e-004, -6.813599e-002, 7.160800e-003, -4.629421e-002, -1.021388e-001, -8.255050e-002, 2.137242e-002, 7.600378e-002, 3.760299e-002, 3.957589e-002, 8.482584e-002, 1.471653e-002, -8.872629e-002, -1.118370e-001, -6.820191e-002, -3.174763e-002, 6.579379e-003, 2.814215e-002, 2.274118e-002, 2.039560e-002, 7.233148e-003, -1.350917e-002, -2.024167e-002, 9.078979e-003, 4.486607e-003, -6.700261e-002, 3.662711e-002, -2.200932e-002, -7.800203e-002, -5.839443e-002, 1.501294e-002, 6.355309e-002, 3.767312e-002, 9.269253e-003, 3.503338e-002, -1.253224e-002, -6.315956e-002, -6.346919e-002, -1.902206e-002, -4.779584e-003, -4.499463e-003, 1.282808e-002, 9.716485e-003, 9.499472e-003, -6.940683e-003, -3.056645e-002, -2.872888e-002, 1.570612e-002, 1.507237e-002, -1.749039e-002, 9.164926e-002, 4.303723e-002, -5.723697e-003, -6.761416e-003, 1.090954e-002, 1.449918e-002, -8.399924e-003, -3.120682e-002, -6.879573e-004, 7.370638e-004, -1.499624e-002, -4.082916e-003, 3.643561e-002, 6.001303e-002, 3.922384e-002, 1.482936e-002, 1.337848e-003, 5.297725e-003, -8.919219e-003, -3.365923e-002, -2.732960e-002, 9.845842e-003, 1.129992e-002, 1.615228e-002, 1.019799e-001, 5.082455e-002, 1.404718e-002, 1.540674e-002, 9.481640e-003, 5.725716e-003, -6.043711e-003, -1.323689e-002, 1.816758e-003, 2.083134e-002, 2.982603e-002, 4.011198e-002, 4.956585e-002, 7.162910e-002, 4.938491e-002, 1.751466e-002, 2.509114e-003, 9.972510e-003, -1.093406e-003, -2.726237e-002, -1.620091e-002, 1.349338e-003, 1.991381e-003, 8.105030e-003, 4.323255e-002, 1.218858e-002, -8.984051e-003, -8.066690e-003, -9.734491e-003, -1.279972e-003, -8.487931e-003, -9.619445e-003, -1.160488e-002, -8.306939e-004, 1.002961e-002, 2.001476e-002, 1.651503e-002, 2.196574e-002, 2.667753e-002, 1.657066e-002, 1.420240e-002, 2.504228e-002, 1.216003e-002, -3.552776e-003, 1.887312e-003, -2.268405e-002, 1.351137e-003, -3.500958e-002, 2.475733e-002, -1.900863e-003, -4.197810e-003, 2.396896e-002, 3.919776e-002, 2.818065e-002, 2.128004e-003, -7.273973e-003, -7.586974e-003, 9.464379e-003, 1.642950e-002, 7.735148e-003, 1.606870e-002, 7.620473e-003, 9.445428e-003, 2.465003e-002, 3.415655e-002, 3.639719e-002, 1.874432e-002, 2.855048e-002, 1.335674e-002, -2.572119e-002, -7.485264e-004, -5.581670e-002,


© ISO/IEC 2004 — All rights reserved

Copyright International Organization for Standardization
Provided by IHS under license with ISO
No reproduction or networking permitted without license from IHS
Not for Resale

3.698008e-002, 1.180045e-002, 5.512260e-003, 3.115877e-002, 4.847745e-002, 2.579518e-002, -1.089209e-002, -2.902561e-002, -2.059640e-002, -1.007468e-004, 1.212725e-002, 2.555679e-002, 4.340415e-002, 2.323703e-002, 3.196179e-003, 2.324023e-002, 3.795035e-002, 3.157705e-002, 3.128793e-002, 5.551994e-002, 2.363798e-002, 1.955096e-002, 3.363855e-002, -3.938792e-002, 4.015826e-002, -1.330795e-002, -4.151942e-002, -2.223565e-002, 1.044494e-002, 1.891931e-002, 1.471276e-003, -1.500280e-002, -2.769820e-003, 1.248487e-002, 9.841217e-003, 1.000546e-002, 2.174965e-002, 1.636650e-002, 6.110570e-003, 1.278839e-002, 1.306972e-002, 1.084711e-002, 4.441865e-002, 4.932958e-002, 2.378569e-002, 4.788882e-002, 5.431764e-002, -2.187153e-002, 4.606698e-002, 1.656401e-002, -1.965025e-002, -2.673897e-002, -1.803427e-002, -8.011183e-003, -1.324778e-002, -1.478623e-002, -7.998586e-004, 1.813052e-002, 2.935222e-002, 2.726475e-002, 2.984467e-002, 2.637139e-002, 1.587039e-002, -5.091062e-003, -1.067103e-002, -1.554703e-003, 2.942668e-002, -2.159100e-003, -2.151695e-003, 1.752256e-002, 1.836267e-002, -5.675124e-003, 1.672879e-002, 5.925724e-003, -1.723040e-002, -2.668764e-002, -3.126753e-002, -3.231836e-002, -2.800452e-002, -2.184275e-002, -1.909518e-002, -1.629516e-002, -1.780391e-002, -1.456134e-002, -1.430311e-002, 1.142022e-003, 3.514145e-003, -2.097032e-002, -2.145486e-002, -3.128830e-003, -8.244983e-003, -3.918505e-002, -4.064980e-002, -3.569510e-002, -9.499619e-003, 1.632651e-002, 3.251934e-004, -1.783511e-003, -1.195893e-002, -2.430899e-002, -2.370635e-002, -1.753012e-002, -1.593598e-002, -1.773942e-002, -2.541960e-002, -3.804144e-002, -4.448813e-002, -4.775572e-002, -3.805719e-002, -7.818528e-003, 8.835066e-003, 7.151701e-003, 9.451158e-003, 1.055107e-002, -6.618529e-003, -2.003932e-002, -1.339204e-002, -2.862053e-002, -2.099265e-002, 2.942881e-002, 7.584626e-003, 5.285867e-003, -6.693381e-003, -1.967046e-002, -5.360604e-003, 1.678630e-002, 2.143861e-002, 1.630332e-002, 1.502270e-002, 4.753155e-003, -1.523790e-002, -2.737445e-002, -1.553716e-002, 7.542830e-003, 2.216273e-002, 3.104094e-002, 2.939768e-002, 1.884237e-002, 2.159909e-002, 2.189221e-002, 2.784697e-002, 2.117221e-002, -2.117112e-003, 2.969170e-002, -1.309062e-002, 1.114958e-002, 7.302123e-003, -2.760088e-002, -2.636829e-002, -5.140104e-003, -7.218205e-004, 6.556143e-003, 2.431708e-002, 3.123587e-002, 1.875434e-002, 5.079332e-003, -4.146919e-004, 9.586020e-004, 7.444098e-004, -9.732889e-004, 4.026842e-003, 2.761022e-003, 4.127378e-002, 2.449709e-002, 2.888866e-002, 5.093638e-002, 2.653003e-002, 7.825938e-003, -6.057066e-002, -2.075545e-002, -1.534824e-002, -4.424253e-002, -6.443462e-002, -6.934342e-002, -6.338154e-002, -4.216541e-002, -1.480443e-002, 4.758002e-003, 6.370799e-003, -6.380555e-003, -2.740595e-002, -4.543907e-002, -6.440072e-002, -5.533243e-002, -4.469516e-002, -3.334935e-002, -2.229125e-003, -1.827500e-002, -4.283045e-002, -8.160769e-003, -1.517294e-002, -2.375733e-002},
{-4.622770e-002, 5.908018e-002, 1.369268e-001, 1.840536e-001, 1.516512e-001, 1.756645e-001, 1.370766e-001, 8.749905e-002, 1.030018e-001, 1.447572e-001, 1.996713e-001, 1.557670e-001, 7.778803e-002, 3.207253e-002, -5.910788e-002, -6.758000e-002, 1.137035e-002, 2.019681e-002, 4.446441e-002, 1.131263e-001, 1.415139e-001, 1.037622e-001, 2.475408e-002, 8.077803e-002, -1.187776e-001, -4.620101e-002, 4.841010e-002, 6.850092e-002, 3.044334e-002, 8.834778e-002, 3.241414e-002, 7.453016e-003, 4.329890e-002, 3.590569e-002, 8.769422e-002, 6.802630e-002, -2.071420e-002, -8.406960e-002, -1.185005e-001, -1.102824e-001, -6.710958e-002, -4.048297e-002, -4.069288e-002, -8.082952e-003, 2.845539e-002, 4.750247e-002, 1.019184e-002, 5.639080e-002, -8.886148e-002, -3.645679e-002, -3.800386e-003, -5.591813e-002, -5.202461e-002, -4.316661e-003, -5.341430e-002, -6.837090e-002, -1.903964e-002, -2.749071e-002, -1.932261e-002, 3.387495e-003, -3.902505e-002, -7.418540e-002, -9.815280e-002, -9.511745e-002, -6.293149e-002, -3.278365e-002, -5.318954e-002, -6.826090e-002, -5.105725e-002, -1.393616e-003, 1.309881e-003, 2.946493e-002, -3.418880e-002, 1.210683e-003, -1.434876e-002, -9.793286e-002, -5.969664e-002, -4.571730e-002, -8.403218e-002, -8.789907e-002, -2.123011e-002, -2.660243e-002, -6.804706e-002, -2.589175e-002, -2.822112e-002, -3.534414e-002, -4.035224e-002, -3.672165e-002, -1.978721e-002, -5.023247e-003, -4.464787e-002, -7.905545e-002, -7.108108e-002, -1.161981e-002, -9.072961e-003, -7.978182e-003, 3.290983e-002, 4.287984e-002, -2.271413e-002, -5.651354e-002, -2.769877e-002, -2.356037e-002, -4.611447e-002, -5.644349e-002, 1.565040e-002, 2.398266e-002, -7.117925e-002, -6.292673e-002, -9.539632e-003, -4.206471e-003, 1.142200e-003, 1.404729e-002, 2.960657e-002, 2.548308e-002, -1.107496e-002, -5.397544e-002, -4.799787e-002, -1.562784e-002, -2.113029e-002, -3.015629e-002, 5.702677e-002, 4.306300e-002, 7.645428e-003, -5.097954e-003, -1.027563e-002, -2.723123e-003, -3.208366e-003, -1.538477e-002, 4.628758e-002, 6.086288e-002, -3.545520e-002, -6.586687e-002, 2.964948e-004, 2.721567e-002, 2.860943e-002, 3.336261e-002, 4.748501e-002, 5.113652e-002, 2.914581e-002, 3.737821e-003, -1.213254e-002, -4.799511e-003, -1.907037e-002, -1.801676e-003, 3.639196e-002, 1.200156e-002, 2.339411e-002, -7.015046e-003, -7.160646e-002, -5.494261e-002, 1.139249e-002, 2.971082e-002, 2.587500e-002, -3.410035e-002, -4.052714e-002, -8.213335e-002, -2.599984e-002, 2.788590e-002, 5.059667e-002, 6.535651e-002, 7.598240e-002, 7.146445e-002, 4.400127e-002, 1.690927e-002, -2.063660e-003, -5.568475e-003, -1.790892e-002, 1.842903e-002, -4.911309e-002, -4.468163e-002, 1.361584e-002, 1.088378e-002, -1.891169e-002, -1.584008e-002, 1.680538e-002, 3.586732e-002, 3.266245e-002, -5.904871e-002, -1.822509e-003, 3.113349e-003, -4.225954e-002, -3.888981e-002, -3.343575e-002, -2.476792e-002, -1.524483e-002, -1.606169e-002, -1.481125e-002, -1.621475e-002, -2.442494e-002, -2.147305e-002, -1.543228e-002, 2.657172e-002, -

© ISO/IEC 2004 — All rights reserved


Copyright International Organization for Standardization
Provided by IHS under license with ISO
No reproduction or networking permitted without license from IHS
Not for Resale

7.187457e-002, -4.246155e-002, -3.956720e-003, 1.957701e-003, 1.137647e-002, -2.174926e-002, -3.258859e-002, -1.605876e-002, 1.597070e-002, -5.131243e-002, 1.297795e-003, 8.011615e-002, 4.214130e-002, -1.123668e-002, -4.663536e-002, -6.648565e-002, -7.442409e-002, -7.060373e-002, -4.882468e-002, -3.640362e-002, -3.818215e-002, -2.303994e-002, -2.072332e-002, 1.450273e-002, -1.812819e-002, 4.109365e-003, -2.708807e-002, -3.426482e-002, 4.338305e-002, 8.779425e-002, 4.978493e-002, -8.884894e-003, 1.574684e-002, -3.782290e-002, -6.500718e-002, 3.665600e-002, 8.993567e-002, 5.209728e-002, 1.826791e-002, -1.576636e-002, -4.300761e-002, -4.120874e-002, -2.621582e-002, -2.720861e-002, -3.275397e-002, -5.336176e-003, -1.220600e-002, 1.265532e-003, 3.843963e-002, 8.871184e-003, -6.480090e-002, -8.206004e-002, -1.501387e-002, 5.569059e-002, 5.151810e-002, 3.205658e-003, 3.347401e-002, -3.038739e-002, -1.047219e-001, -5.476562e-002, 3.724425e-002, 6.450183e-002, 5.662748e-002, 4.263353e-002, 1.519854e-002, 1.261404e-002, 8.183623e-003, -1.414214e-002, -2.233599e-002, 6.887580e-003, -9.253756e-004, -1.098169e-002, 4.067452e-002, -1.833022e-002, -8.098061e-002, -9.211687e-002, -5.415862e-002, 3.102941e-002, 8.179047e-002, 6.264544e-002, 6.383500e-002, -1.483849e-002, -7.817813e-002, -6.704856e-002, -9.512425e-003, 2.083817e-002, 3.553122e-002, 4.662930e-002, 5.491368e-002, 5.567537e-002, 3.193194e-002, -2.879252e-003, -7.190751e-003, 1.769715e-002, -2.251701e-004, 7.387489e-003, 1.365607e-002, -2.231085e-002, -5.507715e-002, -7.038425e-002, -4.823863e-002, 3.692446e-003, 6.514011e-002, 6.732724e-002, 3.343141e-002, -2.371102e-002, -4.621187e-002, -1.303648e-002, 1.861035e-002, 2.107913e-002, 6.897795e-004, 1.217537e-002, 5.656178e-002, 7.590036e-002, 4.326823e-002, 8.815713e-003, 8.103013e-003, 2.210424e-002, -6.562381e-003, 5.004762e-002, -9.419539e-004, 1.628641e-002, 9.367584e-003, -1.916722e-002, -3.126325e-002, -1.433341e-002, 2.746369e-002, 4.406147e-002, 7.732557e-003, -3.228808e-002, -3.551861e-002, 1.283865e-002, 5.744232e-002, 6.199999e-002, 1.471463e-002, -8.798799e-003, 3.502392e-002, 7.525550e-002, 4.927070e-002, 1.626697e-002, 3.885894e-003, 9.050075e-003, -3.076202e-002, 5.468357e-002, -3.201348e-002, -9.647922e-004, 1.815056e-003, -2.097629e-002, -4.408318e-002, -1.694262e-002, 1.211426e-002, 4.405129e-002, 4.049937e-002, 7.536489e-003, -2.163501e-002, -3.980857e-002, -1.598717e-002, 1.313589e-002, 1.047519e-002, -8.044303e-003, 1.865904e-002, 5.583725e-002, 4.834393e-002, 1.288581e-002, -1.977800e-002, -5.596505e-003, -4.188624e-002, 4.005947e-002, -3.766678e-002, -2.198208e-002, -1.222705e-002, -1.139577e-002, 1.295791e-003, 1.183930e-002, 1.038037e-002, 7.956957e-003, 1.474514e-002, 4.750164e-003, 7.759322e-004, -1.024035e-002, -9.663797e-003, -5.183795e-003, -1.027110e-002, -2.966263e-003, 5.049261e-003, 2.316448e-002, 2.741366e-002, 6.006186e-003, -2.530486e-002, -6.826597e-003, -2.654841e-002, 2.015640e-002, 4.551468e-003, -1.788107e-002, -4.827761e-002, -2.152726e-002, 2.035606e-002, 4.447558e-002, 4.120854e-002, 2.102142e-002, 1.996316e-002, 6.515892e-003, 1.731617e-003, -3.677104e-003, -3.736846e-003, -1.996297e-003, -1.804567e-002, -1.421442e-002, -1.222354e-002, -2.327110e-003, 1.183547e-002, 2.072155e-003, -4.840350e-003, 3.455417e-003, 1.782491e-002, 2.748986e-002, 4.314097e-002, 2.512425e-002, -2.684340e-003, -5.196055e-003, 2.011111e-002, 3.980500e-002, 3.146981e-002, 2.695824e-002, 2.729667e-002, 2.129801e-002, 1.220090e-002, -1.682565e-003, -4.528489e-003, -2.044311e-003, -2.101885e-002, -2.382220e-002, -2.265929e-002, -9.611639e-003, 7.004744e-003, 1.994520e-003, 7.687082e-003, 7.800886e-003, 1.555483e-002, 2.148018e-002, 2.940708e-002, 2.665308e-002, 2.029355e-002, 1.821193e-002, 3.154483e-002, 4.502275e-002, 4.307952e-002, 4.133319e-002, 3.688009e-002, 3.106719e-002, 2.044153e-002, 1.306679e-002, 3.679620e-003, -6.493598e-003, -2.463237e-002, -2.773929e-002, -2.765833e-002, -1.302356e-002, 2.781693e-003, 6.122848e-003, 4.344682e-003, -2.594760e-003, -2.865692e-002, 1.372711e-002, -9.135980e-005, -8.603600e-003, -1.654392e-003, 2.085711e-002, 3.127842e-002, 2.776897e-002, 1.430836e-002, -5.441789e-003, -4.850747e-003, 7.375018e-004, 2.011268e-003, -2.605246e-003, -8.945405e-003, -1.198659e-002, -2.324056e-002, -2.798500e-002, -1.508951e-002, -1.194284e-002, 6.784339e-003, 4.191199e-003, -2.199182e-003, -1.737039e-002, -4.582572e-002, 2.109666e-002, 3.895439e-003, -2.124551e-002, -2.612827e-002, 6.968720e-003, 3.463622e-002, 3.175945e-002, 1.142376e-002, -7.076995e-003, -4.104744e-003, 3.565615e-003, 7.004063e-003, 3.441259e-003, -1.906822e-003, -7.719321e-003, -4.473162e-003, 3.580759e-003, 8.586640e-003, -6.877632e-003, 4.930209e-003, -1.683044e-002, 1.465692e-002, 1.238142e-002, 2.644594e-004, 4.162848e-002, 1.855347e-002, -9.353583e-003, -3.951946e-002, -2.965112e-002, -1.404115e-003, 5.177841e-003, -5.888997e-003, -8.750580e-003, -2.634535e-004, 6.365314e-003, 1.825688e-003, -4.341678e-003, -8.070601e-003, -3.824272e-003, 8.255396e-003, 1.399443e-002, 1.511742e-002, -9.209929e-003, -1.655151e-002, -4.838186e-002, 4.181632e-002, 3.116582e-002, 2.991551e-002, 2.275441e-002, 1.586569e-002, 1.459207e-002, -1.771963e-002, -3.950111e-002, -2.448140e-002, -1.159865e-002, -1.525914e-002, -3.518840e-003, 6.923292e-003, 6.423999e-003, 1.294926e-004, -9.574652e-003, -1.494100e-002, -1.167399e-002, -4.735185e-003, 3.072583e-003, -1.304276e-003, -1.485391e-002, -2.521467e-002, -4.515383e-002, 3.537384e-002, 8.593019e-004, 9.765913e-003, -1.476015e-003, -1.155424e-003, 2.064780e-002, 1.737698e-002, -1.533437e-002, -2.247410e-002, -6.846529e-003, -7.484824e-004, 1.220833e-002, 1.662763e-002, 1.985065e-002, 1.632541e-002, 1.431271e-003, -6.903897e-003, -1.675678e-002, -2.562497e-002, -1.135176e-002, -7.632663e-003, -3.358632e-003, 3.743766e-003, -3.112906e-002, -8.161103e-003, -5.301006e-002, -3.643535e-002, -2.020603e-002},


© ISO/IEC 2004 — All rights reserved

Copyright International Organization for Standardization
Provided by IHS under license with ISO
No reproduction or networking permitted without license from IHS
Not for Resale

{1.355330e-002, -1.875994e-003, -1.235306e-002, -4.932095e-002, -9.444368e-002, -5.708335e-003, 9.558737e-003, 3.529911e-002, 7.585251e-002, -4.174428e-003, -1.075902e-001, -7.717344e-002, 6.387551e-003, 4.065488e-002, 9.795452e-003, -5.120691e-002, -5.851860e-002, 5.391305e-003, 4.184006e-002, 3.915895e-002, 5.063422e-002, 3.390769e-002, 2.664081e-002, -3.588656e-002, 2.809283e-002, 2.513606e-002, -4.310989e-003, -3.729001e-002, -6.293455e-002, -2.440392e-002, -6.943028e-002, -3.885505e-002, 1.737706e-002, 1.964879e-002, -1.637828e-002, -1.240277e-002, 2.313539e-002, 1.456264e-002, -4.504400e-002, -1.130048e-001, -1.198863e-001, -6.256849e-002, -1.411637e-002, -1.609638e-002, -1.219677e-002, -1.302811e-002, 1.453368e-002, -2.842198e-002, 3.493606e-002, 2.090010e-002, 2.692447e-002, 3.685302e-002, 1.306564e-002, -5.238521e-002, -1.023063e-001, -8.087206e-002, -3.520031e-002, 5.462517e-003, 5.180421e-002, 7.180168e-002, 7.583797e-002, 1.011868e-001, 7.892352e-002, 2.435286e-002, -1.777324e-002, -2.748137e-002, -1.612621e-002, -2.539104e-002, -3.287687e-002, -4.434099e-002, 9.563433e-004, -2.263569e-002, 1.374500e-002, 3.099808e-002, 9.968325e-002, 1.201913e-001, 3.398527e-002, -5.593394e-002, -8.019207e-002, -7.860993e-002, -4.806378e-002, -9.658151e-003, 5.251972e-002, 7.569707e-002, 7.584320e-002, 6.866297e-002, 6.498892e-002, 3.957553e-002, 3.661021e-003, -6.923426e-003, -1.407994e-003, -7.431165e-003, -1.120001e-002, -4.121398e-002, -1.305315e-003, -2.549374e-002, 1.718759e-002, 6.986965e-002, 1.338787e-001, 9.632596e-002, 1.265713e-002, -1.854609e-002, -4.361040e-002, -3.532615e-002, -2.475662e-003, -8.881837e-003, -7.377177e-004, 2.756909e-002, 3.064435e-002, 2.115055e-002, 1.647756e-003, -1.679800e-002, -3.343081e-002, -2.120415e-002, 3.748086e-003, 2.573563e-002, 1.589053e-002, -1.840187e-002, -1.624083e-002, -2.308921e-002, -1.205731e-002, 2.266345e-002, 3.761939e-002, 1.071804e-002, -5.948803e-003, -3.182369e-003, -3.429648e-002, -7.408112e-003, 6.667248e-002, 2.461861e-002, -6.431810e-002, -5.308038e-002, -7.728118e-003, 1.991735e-003, -9.514423e-003, -2.228329e-002, -1.992612e-002, -2.191695e-003, 2.764840e-002, 4.243580e-002, 3.305721e-002, -2.198753e-003, -2.207207e-002, -8.179911e-003, -3.701087e-002, -1.816971e-002, -1.432209e-002, -3.685809e-002, -4.178162e-002, -2.694879e-002, -4.515196e-002, -1.643470e-002, 4.635059e-002, -3.914652e-003, -7.412648e-002, -1.167897e-001, -6.354058e-003, 7.071059e-003, -2.281675e-002, -4.160357e-002, -3.855213e-002, -1.526515e-002, 1.265082e-002, 3.894923e-002, 3.138135e-002, 7.711112e-003, -1.236401e-002, 2.704233e-002, -7.336191e-003, 1.333587e-002, 1.655939e-003, -1.208571e-002, 1.428372e-003, 2.886805e-002, 2.514719e-002, 2.339759e-002, -8.364429e-003, -9.622565e-002, -3.113868e-002, -4.349249e-002, 2.375052e-002, 8.334240e-002, 3.608866e-002, -9.983529e-003, -1.987648e-002, -1.014706e-003, 3.667902e-002, 4.951996e-002, 3.827636e-002, 2.779910e-002, 3.917768e-003, 5.531523e-002, 2.602613e-002, 3.069558e-002, 1.881128e-003, -2.525810e-002, -4.580547e-002, -7.511212e-003, 7.163133e-003, 3.085754e-002, 3.793614e-002, -6.302797e-002, 3.280844e-002, 6.627656e-002, 4.496254e-002, 8.520864e-002, 8.534626e-002, 4.068147e-002, 1.903649e-002, 2.728991e-002, 4.643274e-002, 4.268135e-002, 4.243063e-002, 3.330795e-002, 5.945330e-003, 4.233835e-002, 6.264181e-003, -6.165113e-003, -2.174126e-002, -5.220296e-002, -5.304912e-002, 8.816360e-003, 1.051132e-002, -7.491016e-004, 2.688872e-002, -8.377329e-003, 4.319812e-002, 9.598167e-002, 3.683978e-002, 4.604275e-003, 3.424885e-002, 4.260699e-002, 2.579131e-002, 2.724525e-002, 4.545957e-002, 3.850012e-002, 3.712109e-002, 2.491320e-002, 4.175557e-003, 1.496000e-004, -7.084625e-002, -7.374842e-002, -3.147700e-002, -2.719810e-002, -4.612107e-003, 6.038518e-002, 2.330935e-002, -2.004273e-003, 5.186547e-002, -3.954132e-003, -2.067849e-002, 1.796090e-002, -1.096891e-002, -6.393291e-002, -5.377379e-002, -6.864425e-004, 2.314488e-002, 4.203060e-002, 4.560707e-002, 3.373902e-002, 2.272562e-002, 3.260422e-002, 1.640536e-002, 4.080275e-003, -1.540980e-001, -1.135362e-001, -1.452884e-002, 2.427154e-002, 4.012796e-002, 6.178986e-002, 2.312324e-002, 5.260115e-002, 1.427990e-001, 8.807791e-002, 4.228770e-002, 1.167361e-002, -3.425963e-002, -8.290524e-002, -1.105237e-001, -6.237316e-002, -3.180324e-003, 4.512969e-002, 3.891958e-002, 2.423355e-002, 4.288202e-003, 3.643461e-002, 3.268387e-002, 1.754836e-002, -1.743358e-001, -1.042902e-001, -2.551287e-003, 3.411752e-002, 3.135704e-002, 3.614656e-003, -3.844466e-002, 2.621999e-002, 1.037253e-001, 6.159435e-002, 2.407931e-002, 5.583834e-003, -2.572191e-002, -4.475308e-002, -8.620787e-002, -1.021245e-001, -4.701247e-002, 2.438653e-002, 2.423349e-002, 8.827238e-003, -2.980940e-002, 2.060562e-002, 2.163321e-002, 5.051696e-002, -1.124952e-001, -4.286123e-002, 8.180557e-003, 1.759061e-002, 1.861207e-002, 3.871755e-002, 3.319753e-002, 7.577477e-002, 9.237227e-002, 5.448408e-002, -8.480699e-003, -5.120151e-002, -4.286703e-002, 1.274874e-002, -3.767437e-003, -7.714464e-002, -7.771420e-002, -2.321306e-002, -7.235405e-003, -1.635469e-002, -6.194235e-002, -7.404192e-003, -2.734694e-002, 1.213935e-002, -4.090232e-002, 1.721665e-002, 3.111814e-002, 7.764777e-003, -6.605386e-003, -1.066633e-003, 2.543986e-003, 1.192359e-002, 1.095627e-002, 2.288440e-002, 1.230835e-002, -2.170452e-002, -3.588705e-002, -1.053346e-002, 1.875917e-003, -7.121115e-002, -1.056311e-001, -7.186779e-002, -3.339661e-002, -2.854481e-002, -7.492110e-002, -1.712139e-002, -4.002934e-002, -5.225438e-002, -2.494513e-002, 1.124253e-002, 4.979978e-002, 6.248599e-002, 5.828174e-002, 2.901307e-002, -6.621178e-003, -1.641039e-002, -1.647726e-002, -6.011924e-003, 6.450969e-003, -6.056650e-003, -2.745035e-002, -2.751391e-002, -3.026819e-002, -7.864698e-002, -1.178657e-001, -1.003040e-001, -4.091333e-002, -2.371652e-002, -6.452678e-002, -3.345226e-003, 1.152084e-003, -2.751391e-002, -

© ISO/IEC 2004 — All rights reserved


Copyright International Organization for Standardization
Provided by IHS under license with ISO
No reproduction or networking permitted without license from IHS
Not for Resale

1.760147e-002, -9.958466e-003, 1.354078e-002, 3.991597e-002, 4.287043e-002, 1.073699e-002, -2.016777e-002, -2.515925e-002, -1.873261e-002, -2.700754e-002, -4.192394e-002, -3.621398e-002, -3.108230e-002, -6.671007e-003, 3.216674e-003, -3.832131e-002, -9.438072e-002, -9.166733e-002, -7.495747e-003, 7.113256e-003, -4.386792e-002, 1.328493e-002, 3.397897e-002, 1.871785e-002, -5.582626e-003, 2.895270e-002, 4.103763e-002, 2.609969e-002, 7.842776e-003, -1.168884e-002, -2.555126e-002, -1.600342e-002, 3.570922e-003, 1.510824e-002, 7.788355e-003, -1.096559e-004, 8.887492e-003, 1.193820e-002, 2.560494e-002, 1.013513e-002, -5.667369e-002, -5.073476e-002, 4.609220e-002, 3.135366e-002, -2.923068e-002, 2.814524e-003, 1.789412e-002, 2.319279e-002, -2.505976e-002, 1.276161e-002, 5.623047e-002, 5.321355e-002, 1.141609e-002, -3.936119e-002, -7.225901e-002, -6.466915e-002, -3.540997e-002, 7.241044e-003, 3.468954e-002, 3.126561e-002, 1.308101e-002, -8.541915e-003, 1.598573e-002, 1.983931e-002, -2.197196e-002, 3.021967e-003, 7.154319e-002, 2.989079e-002, -1.771231e-002, -8.492655e-003, -1.307858e-002, 6.938062e-003, -3.391442e-002, 7.991202e-004, 6.495907e-002, 1.004774e-001, 6.933181e-002, 5.482212e-003, -4.610260e-002, -5.496743e-002, -2.239083e-002, 2.751749e-002, 6.076228e-002, 5.042805e-002, 5.714633e-003, -1.998242e-002, 1.485437e-002, 2.203918e-002, 3.424715e-003, 2.079874e-002, 4.926068e-002, 1.419670e-002, -5.781028e-003, -2.263204e-002, -1.402741e-002, -1.920061e-002, -1.165743e-002, -5.684222e-003, 1.894081e-002, 4.883480e-002, 3.938721e-002, -4.390540e-003, -3.861661e-002, -4.228487e-002, -1.122433e-002, 3.620434e-002, 5.709216e-002, 4.313243e-002, 6.473348e-003, 2.426045e-003, 2.137904e-002, 1.839054e-002, -3.256151e-003, -1.878223e-002, 5.914570e-003, 2.567093e-002, 2.079520e-002, -1.187394e-002, 4.740200e-002, -1.556881e-002, 1.937600e-002, 3.529479e-003, -8.971781e-003, -6.347606e-003, -1.165167e-002, -3.501550e-002, -4.851000e-002, -3.695047e-002, -3.546138e-003, 3.209196e-002, 3.545817e-002, 2.440459e-002, 7.776142e-003, 1.646444e-002, 2.588702e-002, 5.511761e-003, -3.197287e-002, -5.935013e-002, -2.385762e-002, 2.380744e-002, 1.678561e-002, -2.744528e-003, 6.042632e-002, 2.022423e-003, 1.370990e-002, 2.045560e-002, 8.304815e-003, -6.595177e-003, -8.782362e-003, -1.283809e-002, -1.887562e-002, -4.991462e-003, 1.377929e-002, 2.715237e-002, 2.028010e-002, 1.284182e-002, 5.253261e-003, 1.063855e-002, 4.293115e-003, -1.037354e-002, -2.090700e-002, -3.782287e-002, -4.579650e-003, -1.196452e-002, 1.877259e-002, -1.769763e-002, 1.413486e-002, -2.009242e-002, -3.284405e-002, -5.706544e-003, 1.499718e-002, 1.840742e-002, 3.223604e-002, 3.563163e-002, 2.926283e-002, 3.031781e-002, 3.276944e-002, 2.852735e-002, 1.691108e-002, 1.059022e-002, -1.495418e-002, -2.186039e-002, -2.608434e-002, 6.048681e-003, 3.656375e-002, 3.365019e-002, 3.926958e-002, -9.416335e-003, 2.220011e-002, -2.552159e-002, -6.674040e-003, -2.523297e-002},
{-2.362409e-002, 3.631799e-002, 6.688748e-002, 6.017271e-002, 1.567062e-002, -1.052597e-001, 3.988789e-002, 4.394700e-002, -1.015105e-002, -2.703197e-002, 3.411210e-002, 2.021114e-001, 1.476831e-001, 2.751513e-002, -8.574077e-002, -1.360646e-001, -5.240427e-002, 1.754437e-002, -3.248535e-002, -7.071128e-002, -3.910069e-002, -7.982537e-002, -5.670098e-002, -4.203759e-002, -6.371696e-002, -3.067691e-002, 1.500909e-002, 5.679116e-002, 2.876944e-003, -2.393463e-002, 9.607440e-002, 4.836982e-002, -9.375792e-004, 1.997917e-002, -1.186275e-003, 1.349767e-001, 1.123668e-001, 6.831565e-003, -6.863737e-002, -8.807275e-002, -4.319572e-002, 3.720381e-002, 2.551218e-002, -8.566004e-003, 1.645063e-002, -3.461261e-002, -1.362043e-002, -3.053567e-002, -4.086890e-002, -2.766224e-003, 5.659563e-002, 8.452804e-002, -9.937438e-003, 6.164561e-002, 1.012301e-001, 3.120686e-002, -1.024830e-002, 4.993876e-002, 3.410073e-002, 4.849447e-002, 7.328021e-002, 1.505316e-002, -3.537261e-002, -4.917141e-002, -1.301521e-002, 5.129379e-002, 5.083809e-002, 2.941077e-002, 3.676810e-002, -9.332265e-004, -4.127040e-003, -5.500278e-003, 3.558029e-002, 7.932089e-002, 8.856714e-002, 8.166308e-003, -1.942123e-002, 6.480485e-002, 7.640538e-002, 5.512211e-003, -4.150916e-002, 2.837458e-002, 6.592245e-002, 3.349753e-002, 5.239675e-002, 3.386689e-002, -9.239492e-003, -1.956710e-002, 3.803910e-003, 4.954832e-002, 6.257732e-002, 4.432506e-002, 4.631342e-002, 1.197891e-002, -4.028855e-003, 1.595680e-002, 7.692390e-002, 4.504835e-002, -4.716867e-002, -7.265848e-002, -1.372726e-002, 2.726334e-002, 4.234380e-002, -1.304222e-002, -6.466375e-002, -3.038751e-002, 4.890268e-002, 1.475558e-002, -6.037579e-004, 2.073862e-002, 1.499248e-002, -6.001242e-003, -1.087601e-002, 1.293794e-002, 2.027918e-002, 1.701851e-002, 4.844847e-002, 1.109698e-002, -1.611377e-002, 8.596964e-003, -6.579372e-002, -1.260786e-001, -9.808592e-002, -2.051667e-003, -3.077680e-002, 4.311131e-003, 3.118826e-002, -7.971748e-003, -4.372202e-002, -5.927643e-002, -3.521380e-002, -2.384908e-002, -6.142995e-002, -6.830404e-002, -7.158382e-002, -8.924803e-002, -9.551187e-002, -7.558761e-002, -3.767886e-002, 2.635226e-003, 2.563232e-002, 1.650432e-002, -2.250124e-002, 7.512125e-004, -1.304000e-001, -8.461610e-002, 3.561742e-002, 1.387709e-003, -7.131586e-002, 9.610256e-003, 2.961253e-003, -1.306468e-002, 1.759249e-002, 1.355489e-002, -1.023330e-001, -1.031343e-001, -6.063358e-002, -6.240127e-002, -9.151264e-002, -1.238844e-001, -1.186468e-001, -7.777390e-002, -2.812003e-002, -7.118509e-003, 1.837857e-002, 2.776530e-002, -1.533206e-002, -4.016442e-003, -1.627333e-002, 5.001487e-002, 7.936977e-002, -2.098639e-002, -6.098087e-002, -2.726805e-002, -9.255477e-002, -5.498428e-002, 2.268430e-002, 3.940977e-002, -7.269669e-002, -1.210670e-001, -1.169596e-002, 2.019644e-002, -2.193367e-002, -6.033411e-002, -5.915612e-002, -2.303958e-002, 1.390866e-003, -6.251159e-003, 2.411573e-002, 3.608306e-002, 7.306044e-003, 6.065495e-003,

 © ISO/IEC 2004 — All rights reserved

Copyright International Organization for Standardization
Provided by IHS under license with ISO
No reproduction or networking permitted without license from IHS
Not for Resale

4.034359e-002, 5.628037e-002, 7.362616e-002, 6.820092e-002, 4.012724e-002, -4.754237e-002, -1.008451e-001, -5.033170e-002, -8.720504e-003, 2.653014e-002, 6.045461e-002, 4.075938e-002, 7.143274e-002, 6.568177e-002, 2.487398e-002, -5.231235e-003, -8.161428e-003, 1.179815e-002, 9.540821e-003, -1.157855e-002, 1.195979e-002, 2.558603e-002, 2.193931e-002, 1.308453e-002, 2.099452e-002, 1.663361e-002, 6.167593e-002, 7.726063e-002, 8.715669e-003, -8.638030e-002, -8.631547e-002, -5.331875e-002, -4.037539e-002, 3.083851e-002, 1.145889e-001, 1.202486e-001, 1.072544e-001, 7.565674e-002, 3.032587e-002, 1.424477e-002, 2.175140e-002, 3.105957e-002, 8.006064e-003, -2.432418e-002, -1.334010e-002, 6.399316e-003, 3.593818e-002, 2.765866e-002, -9.456496e-003, -1.927639e-003, 2.016735e-002, 1.540626e-002, 2.333735e-002, 1.604886e-002, -3.049899e-003, -6.526775e-002, -4.077191e-002, 8.756570e-002, 1.111670e-001, 7.737059e-002, 6.062302e-002, 4.414147e-002, 7.218188e-003, 4.316042e-003, 3.194638e-002, 3.528285e-002, -4.654131e-003, -3.142287e-002, -2.440467e-002, 4.174568e-003, 3.751036e-002, 9.611546e-003, 2.512231e-003, -1.248900e-004, -1.532032e-002, -1.788911e-002, -1.400211e-003, 1.629503e-002, 1.702326e-002, -7.186477e-002, -4.814033e-002, 5.578743e-002, 5.774381e-002, 1.784318e-002, 9.328263e-003, 2.054795e-002, 1.413550e-003, -4.590878e-003, 2.058274e-002, 2.281423e-002, -1.266759e-002, -2.619622e-002, -2.573946e-002, -6.194451e-004, 1.856323e-002, -1.049764e-002, 4.061407e-002, 6.524461e-003, -1.959245e-002, -6.918591e-003, 1.118093e-002, 2.241393e-002, 9.299064e-003, -3.858488e-002, -5.825669e-003, 3.387835e-002, 1.599261e-002, -1.465672e-002, -2.307638e-002, 1.583985e-002, 3.667346e-002, 1.760960e-002, 1.181094e-002, 7.384557e-003, -1.439084e-002, -1.570273e-002, -2.493307e-002, -5.739376e-003, 5.190099e-003, -1.436387e-002, 3.493112e-002, -4.047799e-002, -5.633163e-002, -1.117357e-002, 3.708797e-002, 4.736292e-002, 1.656412e-002, 1.884680e-002, 2.922970e-002, 1.299975e-002, -2.399177e-002, -5.829913e-002, -6.266982e-002, -8.605574e-003, 3.731465e-002, 3.570920e-002, 1.526888e-002, -3.176324e-003, -7.252158e-003, -8.771893e-003, -1.815696e-002, -7.444064e-003, -4.371627e-003, -4.000765e-002, -4.131756e-002, -1.207556e-001, -9.670178e-002, -2.364289e-002, 1.252325e-002, 1.939740e-002, 9.381040e-003, 5.099234e-002, 5.869067e-002, 4.334635e-002, 5.855404e-003, -4.322009e-002, -5.358169e-002, -3.070313e-002, 8.823912e-003, 2.473134e-002, 9.281481e-003, -7.455328e-003, 4.689954e-003, 9.895515e-004, -3.509638e-003, 1.867013e-003, 5.843037e-003, -3.637299e-002, -8.849378e-002, -8.903050e-002, -1.483935e-002, 1.930139e-002, 2.522744e-003, -2.413404e-003, -3.025048e-003, 1.468537e-002, 1.920137e-002, 4.305530e-002, 3.421400e-002, -2.222667e-002, -6.306510e-002, -4.443587e-002, 9.134568e-004, 2.067089e-002, 1.132552e-002, 6.340875e-003, 2.210626e-002, 1.137760e-002, 7.382401e-003, 9.750967e-003, 1.446174e-002, -9.544622e-003, -3.676606e-002, -3.554502e-002, -1.549232e-002, 8.236051e-003, 1.598259e-002, 1.480631e-002, 1.448814e-002, 4.678274e-003, 1.145827e-002, 1.518049e-002, -1.401153e-002, -6.233330e-002, -9.292700e-002, -7.327476e-002, -9.199887e-003, 1.902353e-002, 1.230758e-002, 2.265396e-002, 3.168277e-002, 6.959773e-003, 9.067103e-003, 1.344191e-002, 6.136612e-003, 1.524202e-002, 2.513947e-002, -2.725878e-002, -5.527840e-002, -2.127472e-002, 8.841641e-003, 3.226248e-002, 4.069363e-002, 1.854792e-002, -7.011670e-004, -1.975512e-002, -3.681645e-002, -5.131206e-002, -6.283611e-002, -4.435584e-002, -6.094454e-003, 2.418300e-003, 9.039282e-003, 2.185816e-002, 2.499566e-002, -3.343205e-003, -1.313324e-003, -1.150198e-002, -2.149316e-002, 3.145792e-002, 3.629823e-002, -1.032303e-002, -5.570042e-002, -4.151758e-002, -3.447233e-003, 2.138796e-002, 2.347818e-002, 4.584721e-003, -2.138090e-002, -3.776020e-002, -4.438291e-002, -3.443106e-002, -1.731518e-002, -9.188822e-003, -2.478326e-003, -1.225518e-002, -7.279728e-003, 4.536076e-003, -7.960183e-003, -2.505285e-002, -2.453745e-002, -3.664692e-002, -4.530206e-002, 2.998683e-002, 2.498756e-002, 4.471662e-003, -2.847390e-002, -2.782918e-002, 6.066003e-003, 3.337566e-002, 4.212655e-002, 2.460433e-002, -3.918253e-003, -2.086688e-002, -1.789370e-002, -3.314615e-003, -3.929751e-003, -2.055418e-003, -9.834392e-003, -2.029372e-002, -2.210284e-002, -1.125087e-002, -1.291139e-002, -2.520334e-002, -2.109498e-002, 9.463058e-003, 2.997405e-003, 3.083722e-002, -2.454196e-003, -1.325338e-002, -2.809335e-002, -3.882773e-002, -3.581845e-002, -1.844369e-002, -9.600062e-003, -1.535246e-002, -1.219707e-002, -8.660499e-003, -1.895473e-003, -2.339631e-003, -7.247401e-003, -3.539527e-003, -6.899963e-003, -1.496715e-002, -1.585499e-002, 2.325363e-003, 1.023298e-002, -1.551009e-002, -2.399735e-003, 2.381541e-002, 2.388392e-002, 1.373040e-002, -1.129783e-002, -1.468536e-002, -6.680646e-003, -1.463543e-002, -1.958839e-002, -1.315269e-002, -2.449919e-003, -1.488845e-003, 9.310365e-003, 1.371654e-002, 7.766299e-003, -5.856156e-003, -4.062122e-003, 6.258950e-003, 2.646218e-003, -4.083277e-003, -9.453554e-003, 2.022009e-002, 3.662451e-002, 9.327299e-003, -8.638315e-004, -1.772621e-002, -5.113565e-003, -2.475593e-002, 2.469462e-002, 1.025749e-002, 2.153397e-002, 1.873389e-002, 1.202107e-002, 2.062192e-002, 3.236654e-002, 2.251879e-002, 2.053197e-002, 2.290198e-002, 1.161493e-002, 2.307703e-003, 1.308427e-002, 3.428402e-002, 2.442487e-002, -8.270662e-003, -1.103132e-002, 9.772079e-003, 4.273807e-002, 2.676492e-002, -2.896341e-003, -2.292463e-002, -2.382803e-003, -2.829800e-002, 7.360973e-002, 5.508492e-002, 3.737483e-002, 2.928858e-002, 2.356341e-002, 2.166926e-002, 9.434644e-003, -1.897783e-003, -9.489566e-003, -1.470280e-002, -1.048918e-002, 9.628184e-003, 2.886082e-002, 5.296081e-002, 3.133417e-002, -1.803854e-002, -2.482387e-002, -1.907104e-002, 1.393084e-002, 1.211214e-002, 6.425514e-003, 1.813525e-002, 4.947017e-002, 3.363401e-002},

© ISO/IEC 2004 — All rights reserved


Copyright International Organization for Standardization
Provided by IHS under license with ISO
No reproduction or networking permitted without license from IHS
Not for Resale

{-3.022316e-002, 9.252696e-002, 2.002374e-001, 2.227351e-001, 7.960622e-002, 3.068037e-002, 7.545010e-003, 1.599735e-002, 2.526935e-002, 1.873256e-002, 5.583823e-002, 1.172402e-001, 1.084731e-001, 7.512058e-002, -4.425711e-003, -2.827292e-002, -1.094222e-002, -7.666094e-002, -1.320593e-001, -7.768984e-002, -7.985971e-003, -9.587950e-003, -5.690834e-002, -5.906769e-002, -9.631014e-002, -4.633072e-002, 4.062376e-002, 5.472456e-002, -2.113597e-002, -2.365816e-003, -3.171494e-002, -2.972505e-002, -1.663407e-002, -2.753537e-002, -4.164277e-002, 4.150265e-003, 1.964440e-002, 1.963777e-002, 7.222865e-003, 1.579295e-002, 2.704524e-002, 2.592778e-002, -1.506584e-002, -1.380793e-002, -1.256122e-003, -2.204338e-002, -2.182828e-002, -1.443649e-002, -1.656023e-001, -1.381755e-001, -6.786934e-002, -5.416619e-002, -2.943032e-002, -1.769898e-002, -4.582440e-002, -4.743304e-002, -3.882337e-002, -5.583492e-002, -6.460511e-002, -4.346630e-002, -4.692860e-002, -2.901989e-002, -7.917875e-003, 2.712195e-002, 5.973840e-002, 8.415919e-002, 6.493834e-002, 5.892412e-002, 3.693881e-002, -2.976807e-002, -7.288005e-004, 1.217977e-002, -1.690021e-001, -1.310214e-001, -7.195659e-002, -4.912036e-002, 6.429766e-004, -3.983910e-003, -2.627148e-002, -3.315075e-002, -1.454036e-002, -5.055144e-002, -3.783544e-002, 2.192462e-002, 1.510545e-003, -1.923847e-002, -1.061481e-002, 2.410757e-002, 6.444167e-002, 8.539084e-002, 8.905969e-002, 9.561949e-002, 4.694645e-002, -2.459366e-002, 1.852597e-002, 1.096321e-002, -9.196832e-002, -4.540612e-002, -1.250991e-003, 2.160766e-002, 2.538887e-002, 3.784106e-002, 1.570879e-002, 7.015911e-003, 2.717410e-002, -1.375402e-002, -2.666178e-002, 5.088726e-002, 9.458509e-002, 5.857963e-002, 3.942392e-002, 4.472125e-002, 6.444975e-002, 7.924176e-002, 8.083093e-002, 8.342905e-002, 3.764753e-002, -1.403726e-002, 3.111520e-002, 5.403148e-003, -4.736755e-002, 1.244354e-002, 5.687597e-002, 4.429103e-003, -3.272245e-003, 4.333673e-002, 4.398572e-002, 4.943633e-002, 7.343212e-002, 2.555191e-002, -3.404710e-002, 3.536214e-002, 8.799198e-002, 5.939932e-002, 2.890825e-002, 9.224955e-003, -2.466491e-003, -5.191567e-003, 7.498601e-003, 3.052049e-002, 2.572441e-002, 4.888934e-003, 4.231911e-002, 3.234408e-003, -8.804822e-003, 6.346136e-002, 4.269503e-002, -7.531903e-002, -6.472292e-002, 4.317275e-006, 5.096226e-002, 6.307978e-002, 6.219971e-002, 2.613183e-002, -4.193953e-002, -4.373748e-003, 7.666607e-002, 3.499909e-002, -3.864275e-002, -8.114997e-002, -9.901354e-002, -8.876027e-002, -4.878427e-002, 4.214856e-003, 2.608506e-002, 1.882313e-002, 3.005800e-002, -1.340287e-002, 3.305294e-002, 7.191532e-002, 2.367404e-002, -2.565842e-002, -1.518828e-003, 4.345976e-003, 8.907858e-003, 2.548603e-002, 5.457906e-002, 7.867636e-002, 2.102781e-002, -2.875645e-002, 2.941284e-002, 3.897557e-002, -2.706117e-002, -8.680675e-002, -1.127477e-001, -1.001872e-001, -5.526842e-002, -6.911837e-003, 1.314821e-002, 1.141638e-002, -6.107406e-003, -2.080804e-002, 2.047185e-002, 2.016245e-002, 3.726113e-002, 5.970130e-002, 1.042513e-002, -5.696689e-002, -3.355569e-002, -1.260607e-002, 1.268609e-002, 3.150958e-002, 4.888470e-002, -8.677958e-003, -2.063300e-002, 7.889395e-003, -1.877837e-003, -4.978962e-002, -8.577877e-002, -8.855691e-002, -5.774231e-002, -2.510205e-002, -8.020484e-003, -2.095364e-003, -2.834419e-002, -4.537856e-003, -3.917251e-002, -2.964770e-002, 4.643880e-002, 7.512470e-002, 5.787422e-002, 5.022779e-002, -1.491720e-002, -7.974300e-002, -2.851827e-002, 5.511304e-002, 8.727577e-002, 2.960772e-002, -2.426560e-002, -3.479363e-002, -1.719222e-002, -3.245426e-002, -6.436349e-002, -7.936312e-002, -5.230451e-002, -2.730365e-002, -1.586736e-002, -2.604738e-003, -2.548132e-002, 4.173402e-002, -9.037469e-002, -3.721472e-002, 4.349200e-002, 3.832002e-002, 1.503374e-002, -9.127026e-004, -4.735702e-002, -9.401143e-002, -7.549708e-003, 3.618581e-002, 3.380229e-002, 1.554725e-002, -1.156694e-002, -3.122024e-002, -1.936976e-002, -6.889946e-003, -2.875836e-002, -4.673933e-002, -4.291919e-002, -2.732335e-002, -1.235313e-002, 1.065510e-002, 3.477287e-003, 4.703854e-002, -7.809264e-002, -2.516824e-002, 2.952291e-002, 3.151727e-002, -8.360147e-003, -4.447877e-002, -6.212765e-002, -4.260250e-002, 5.054426e-002, 4.431787e-002, 7.037655e-003, -1.627556e-002, -3.388673e-002, -3.771589e-002, -2.728611e-002, 3.875400e-003, 6.491703e-003, -1.024295e-002, -3.056567e-002, -1.741669e-002, -3.977015e-003, 1.351609e-002, 7.818946e-003, 1.377717e-002, -3.589336e-002, -3.177849e-003, 2.857160e-002, 3.534700e-002, 1.690570e-002, -3.346278e-002, -7.361916e-002, -3.714897e-002, 2.170716e-002, 2.471111e-002, -9.164288e-003, -3.712237e-002, -4.454151e-002, -3.736334e-002, -2.566772e-002, 4.074296e-003, 2.089463e-002, 3.178944e-003, -2.568150e-002, -7.337664e-003, 6.035682e-004, 2.824363e-002, -5.587695e-003, -1.119017e-002, 5.883185e-003, 1.195394e-002, 4.863945e-002, 7.867858e-002, 6.600229e-002, 1.836333e-002, -3.168187e-002, -3.427652e-002, -1.170181e-002, -5.323479e-003, -1.310691e-002, -1.766386e-002, -7.683803e-003, 7.695232e-003, 1.129005e-002, 1.263610e-002, 2.619991e-002, 2.827901e-003, -2.266445e-002, 2.517863e-003, 1.877750e-003, 4.379611e-002, -1.805287e-002, -8.638617e-003, -5.794545e-003, -4.906154e-002, -2.568645e-002, 2.213279e-002, 2.926988e-002, 3.718019e-002, 1.978255e-002, 2.250083e-004, -1.088710e-002, -2.674243e-002, -4.585017e-002, -6.211164e-002, -6.157695e-002, -2.599334e-002, 1.173210e-002, 2.802189e-002, 3.727455e-002, 8.846960e-003, -1.367508e-002, 1.206845e-002, 1.103026e-003, 4.351106e-002, -2.850668e-002, 3.882828e-003, 4.073900e-002, -3.662026e-002, -5.811112e-002, -1.830281e-002, 1.789094e-002, 2.865168e-002, 1.038977e-002, -2.360976e-002, -2.970051e-002, -3.854838e-002, -5.388489e-002, -5.925900e-002, -4.410938e-002, -2.838812e-002, 1.361619e-003, 4.055758e-002, 4.366832e-002, 1.015560e-002, -1.916088e-003, 1.243539e-002, -1.338416e-003, 2.479855e-002, -1.868773e-002, 5.993099e-003,


© ISO/IEC 2004 — All rights reserved

Copyright International Organization for Standardization
Provided by IHS under license with ISO
No reproduction or networking permitted without license from IHS
Not for Resale

7.825532e-002, 9.473744e-003, -3.238771e-002, -4.332861e-003, 3.012534e-002, 4.693491e-002, 3.214734e-002, -1.685166e-003, -1.874289e-002, -3.875670e-002, -4.467125e-002, -3.130959e-002, 4.154926e-003, 1.844858e-002, 2.313788e-002, 4.026979e-002, 2.486846e-002, 3.295640e-003, 4.939739e-003, 3.710236e-004, -1.502079e-002, -5.517802e-003, -6.263285e-003, -8.697562e-003, 6.406012e-002, 1.952314e-002, -1.095839e-002, 2.860323e-003, 2.478035e-002, 3.081950e-002, 1.224534e-002, -9.321948e-003, -1.929527e-002, -1.964090e-002, -8.128132e-003, 1.407352e-002, 4.025232e-002, 3.104764e-002, 1.721888e-002, 1.401979e-002, 2.281946e-003, -3.908446e-003, 7.319872e-003, -1.426866e-002, -3.682969e-002, -1.802360e-002, 1.453822e-002, -1.027026e-002, 3.364979e-002, 2.762448e-002, 1.033355e-002, 5.943658e-003, 1.196476e-002, 1.689798e-002, 6.396495e-003, 1.948233e-003, 9.503357e-003, 2.054115e-002, 2.998914e-002, 3.419298e-002, 3.467178e-002, 2.418208e-002, 7.347448e-003, -1.595561e-002, -1.570928e-002, -8.501895e-003, -3.584612e-003, -1.904683e-002, -4.371010e-002, -6.394156e-003, 9.603800e-003, 1.367535e-003, 2.940332e-002, 4.496497e-002, 4.809718e-002, 2.888487e-002, 1.094599e-003, -2.348512e-002, -4.036491e-002, -3.512443e-002, -1.115995e-002, 2.818478e-002, 5.225035e-002, 5.510294e-002, 4.414747e-002, 3.275844e-002, 2.220065e-002, -1.458035e-002, -2.044112e-002, -1.121031e-002, -1.208390e-003, -1.208309e-002, -1.303493e-002, 1.574933e-002, -6.032110e-003, 2.488997e-003, 4.010183e-002, 3.813714e-002, 4.700867e-002, 3.392078e-002, 2.774747e-003, -4.207993e-002, -7.384698e-002, -6.309305e-002, -2.217262e-002, 2.671146e-002, 5.520635e-002, 6.007897e-002, 4.540878e-002, 4.509770e-002, 3.723147e-002, 1.365942e-002, -5.459015e-003, -1.715090e-002, -4.359630e-004, 2.002356e-002, 2.112713e-002, 2.532422e-002, 6.287304e-003, 2.289799e-002, 5.567348e-002, 1.733918e-002, 9.447972e-003, 1.358120e-002, -4.568896e-003, -3.930639e-002, -5.909456e-002, -5.765993e-002, -1.779635e-002, 2.146083e-002, 3.038425e-002, 2.125015e-002, 2.074848e-002, 3.880965e-002, 4.868635e-002, 3.665819e-002, 5.727114e-005, -1.484775e-002, 1.083436e-002, 2.544706e-002, 2.267913e-002, 6.958400e-003, 1.665002e-002, 2.444112e-002, 5.264639e-002, -5.430373e-003, -3.483089e-002, -1.190610e-002, -9.472602e-003, -1.700073e-002, -2.132503e-002, -2.420157e-002, -1.460590e-002, -2.724280e-003, -1.296822e-002, -2.454989e-002, -3.461715e-003, 3.576525e-002, 4.648414e-002, 1.262992e-002, -1.835314e-002, -1.290113e-002, 8.198118e-003, 8.731986e-003, 4.262974e-003, -2.063793e-002, 3.373501e-003, 3.436474e-003, 2.497125e-002, -3.109051e-002, -5.896273e-002, -4.187925e-002, -2.313045e-002, -6.376296e-003, -2.572080e-003, -1.670032e-002, -2.826087e-002, -3.696768e-002, -4.610938e-002, -4.123020e-002, -5.535328e-003, 2.685800e-002, 1.353694e-002, -1.034669e-002, -1.072033e-002, 3.190155e-003, 6.565208e-003, -8.064771e-003, -1.701460e-002, -2.801880e-002, -1.298775e-002, -5.705249e-003},
{-7.901625e-002, -8.144569e-002, -4.674760e-002, -9.168400e-002, -1.764210e-001, -6.194221e-002, -2.810441e-002, -1.764567e-002, 1.628573e-002, -1.416260e-002, -1.652822e-001, -1.511345e-001, -1.033572e-001, -7.222535e-002, -2.870263e-003, 2.557926e-002, -2.125208e-002, -2.353440e-002, -3.231815e-004, -9.327421e-004, -1.532073e-002, -1.274665e-002, -6.319741e-003, -2.726613e-002, 6.126835e-002, 5.905595e-002, 5.107034e-002, -9.650988e-003, -4.187830e-002, 2.162112e-002, -1.088570e-002, 1.065908e-002, -2.841643e-004, 2.056316e-002, -5.051674e-002, -9.369771e-002, -2.414790e-002, 5.356567e-002, 1.098848e-001, 1.255180e-001, 1.067718e-001, 6.998903e-002, 2.212888e-002, -1.531273e-002, -3.087970e-002, -1.006250e-002, 9.734769e-003, 4.711224e-003, 1.624499e-002, 1.118364e-002, 2.761446e-002, 2.781922e-002, 7.095015e-002, 3.683195e-002, -9.064329e-003, 2.897740e-002, 1.421137e-002, -2.279961e-003, 8.027170e-002, -1.826868e-002, -5.681823e-002, -1.397174e-002, 5.368771e-002, 8.825704e-002, 8.772227e-002, 4.989302e-002, 8.290515e-003, -2.022929e-002, -1.577381e-002, 1.207339e-002, 1.716567e-002, 3.276835e-002, -7.237087e-002, -5.752271e-002, 4.106890e-003, 7.841401e-002, 9.615772e-002, -5.852408e-003, -2.690581e-002, 1.269255e-002, 1.118168e-002, -4.919698e-002, 9.825626e-002, 1.143407e-001, 5.909565e-004, -4.874202e-002, -4.104849e-002, -1.982699e-002, -4.456329e-003, -1.163340e-002, -2.487595e-002, -6.366257e-003, 1.735903e-002, 2.273686e-002, 1.412097e-002, 3.858994e-002, -8.559233e-002, -3.822450e-002, 4.305450e-002, 8.536540e-002, 2.941530e-002, -5.037227e-002, -3.791373e-002, 2.886826e-003, 3.910894e-003, -6.769924e-002, -1.500269e-002, 1.425609e-001, 1.482613e-001, 7.229390e-002, 9.315145e-003, -3.847051e-003, 1.858266e-003, -5.265146e-004, 4.181258e-003, 2.985713e-002, 4.053525e-002, 2.241209e-002, 4.973887e-003, 2.777367e-002, -2.557657e-002, -6.599305e-003, 2.808267e-002, 1.542772e-002, -6.214438e-003, -4.259990e-002, -2.692527e-002, -2.737026e-004, 4.365780e-003, -3.663284e-002, -7.522878e-002, -1.480685e-002, 9.540115e-002, 1.589817e-001, 1.418218e-001, 1.177880e-001, 8.340679e-002, 3.513810e-002, 4.954979e-003, 2.300423e-002, 3.168531e-002, 2.851237e-003, -1.242952e-002, 1.495666e-003, -4.762753e-002, -3.896102e-002, -2.951416e-002, 1.432636e-002, 5.634342e-002, -1.210552e-002, -3.540674e-002, -1.809585e-002, 8.722582e-004, 1.015048e-002, -2.502850e-002, -6.426133e-002, -8.100749e-002, -4.625382e-003, 3.917147e-002, 4.277903e-002, 1.076685e-002, -3.772846e-002, -5.288942e-002, -1.223461e-002, 1.520170e-002, -1.636051e-002, -2.752808e-002, -8.076309e-003, -4.892789e-002, -3.466282e-002, -2.360658e-002, 3.004011e-002, 9.053374e-003, -7.021596e-002, -5.558623e-002, -3.093866e-002, -2.571485e-002, 1.813440e-002, 4.704795e-002, 1.541043e-002, -7.834057e-002, -8.775059e-002, -5.852333e-002, -5.280248e-002, -8.166045e-002, -1.180290e-001, -1.003605e-001, -3.248585e-002, -5.861209e-003, -2.816237e-002, -2.911433e-002, -8.489347e-003,

© ISO/IEC 2004 — All rights reserved


Copyright International Organization for Standardization
Provided by IHS under license with ISO
No reproduction or networking permitted without license from IHS
Not for Resale

5.287777e-003, 7.847978e-003, 1.456757e-002, 3.395472e-002, -4.781816e-003, -9.690134e-003, -8.672926e-003, -1.600276e-002, 7.857522e-003, 5.575782e-002, 5.520551e-002, 1.931150e-002, -3.808543e-002, -4.437322e-002, -3.394841e-002, -4.511180e-002, -8.296292e-002, -1.205966e-001, -9.151603e-002, -2.058351e-002, -8.109307e-003, -1.996992e-002, -1.611025e-002, -3.207310e-003, 5.411921e-002, 4.525659e-002, 2.136027e-002, 2.082742e-002, 2.882841e-004, -1.680082e-002, -9.275380e-003, 2.722277e-003, 9.089938e-003, -1.847594e-002, -2.838940e-002, -3.562096e-002, -2.551982e-002, 1.125452e-002, 3.317694e-002, 1.422034e-002, -3.992043e-002, -7.897825e-002, -4.399848e-002, 1.209606e-003, -3.960572e-003, -5.362507e-003, -7.122883e-003, -2.832285e-003, 8.660728e-002, 5.680461e-002, -2.692100e-003, -5.356120e-003, 2.428844e-002, 4.570419e-002, 6.677392e-002, 4.663622e-002, -3.581238e-002, -6.842077e-002, -6.143398e-002, -3.771401e-002, 2.394430e-003, 4.325840e-002, 8.937608e-002, 7.370521e-002, 7.762813e-003, -2.750237e-002, 2.534100e-003, 1.578174e-002, 4.302823e-003, 2.765611e-003, -8.260362e-003, 1.114840e-003, 7.659268e-002, 1.841894e-002, -4.897256e-002, -5.978907e-002, -2.004044e-002, 3.502422e-002, 8.311815e-002, 7.275827e-002, -3.615873e-002, -1.057842e-001, -1.023102e-001, -5.865133e-002, -2.376692e-003, 5.113313e-002, 8.742587e-002, 9.582376e-002, 4.116364e-002, 1.612312e-002, 2.939802e-002, 3.904010e-003, -3.141517e-003, -1.212643e-003, -3.407576e-003, 1.465050e-002, 3.521721e-002, -2.543759e-002, -7.344074e-002, -6.659105e-002, -1.825586e-002, 4.071194e-002, 8.385081e-002, 1.206587e-001, 6.076514e-002, -3.126165e-002, -7.568045e-002, -6.986228e-002, -1.895601e-002, 2.726415e-002, 4.687027e-002, 6.224689e-002, 4.920094e-002, 4.689962e-002, 3.730347e-002, -1.410001e-002, 1.469464e-003, -1.558237e-002, 3.430164e-003, 2.303017e-002, 2.688436e-002, 2.607535e-003, -9.207105e-003, -1.472894e-002, -1.605010e-002, 4.461615e-003, 1.243849e-002, 3.806909e-002, 2.427453e-002, -1.759201e-002, -3.729839e-002, -3.312473e-002, -8.829418e-003, 1.176874e-002, 5.426794e-006, 4.031506e-004, 2.212838e-002, 4.049791e-002, 1.829535e-002, -2.604710e-002, 2.636200e-003, -2.457333e-002, 2.121883e-002, 4.231350e-002, -2.645434e-002, -4.251346e-002, -1.969620e-002, 3.814450e-003, 2.710052e-002, 4.960900e-002, 5.441557e-002, 5.389131e-002, 4.940356e-002, 7.639469e-003, -1.847202e-002, -1.496982e-002, -1.443857e-003, 1.106204e-002, -3.160174e-002, -5.389670e-002, -1.552160e-002, 1.761306e-002, -6.642802e-003, -1.585670e-002, 9.116824e-003, -3.485327e-002, 1.194745e-002, 2.848484e-002, -6.718190e-002, -3.780102e-002, -1.904617e-002, -1.325613e-002, 3.027440e-003, 3.594954e-002, 5.829939e-002, 6.061684e-002, 3.861913e-002, -1.441308e-002, -4.924827e-002, -5.170997e-002, -8.610179e-003, 2.863802e-002, -2.202918e-004, -4.212815e-002, -2.914793e-002, -1.262127e-002, -2.887395e-002, 5.699147e-003, 9.635963e-003, -1.551327e-002, -1.584519e-002, 9.653082e-003, -5.536276e-002, 9.649752e-005, 2.212385e-002, 8.881662e-003, 1.318886e-002, 2.605637e-002, 3.201241e-002, 3.323344e-002, 2.018220e-002, -6.757428e-004, -2.530988e-002, -3.973882e-002, -2.321053e-002, -1.090418e-002, -1.277480e-002, -2.358178e-002, -2.794209e-002, -2.452314e-002, -3.142243e-002, 2.041512e-002, 5.845007e-003, 2.063012e-002, -2.963377e-002, 3.716438e-003, -4.696271e-002, 5.686583e-003, 2.873727e-002, 9.478011e-003, -9.283462e-003, -9.186385e-003, 2.395648e-003, 1.277285e-002, 1.266962e-002, 1.515133e-002, 5.156926e-003, -7.434626e-003, -2.241985e-002, -3.986345e-002, -2.793392e-002, -1.370040e-002, -2.193024e-002, -2.058388e-002, -3.435328e-003, 2.339164e-002, 2.163837e-002, 2.240594e-002, -4.888072e-003, 3.880794e-004, -2.267617e-002, 2.674006e-002, 5.330738e-002, 2.954793e-002, -1.524142e-002, -4.421852e-002, -4.241648e-002, -2.850613e-002, -9.867300e-003, 2.822134e-003, 1.433475e-002, 1.168775e-002, -6.182434e-003, -8.453775e-003, 1.981647e-003, -1.366033e-002, -1.610555e-002, 2.450056e-003, 1.897463e-002, 8.141384e-003, 3.420100e-002, -1.765468e-002, 2.814285e-002, -9.783773e-003, 1.261605e-003, 2.150709e-002, 4.105698e-002, 2.494031e-002, -2.351493e-002, -6.471229e-002, -7.241049e-002, -4.582379e-002, -1.057798e-002, 2.163160e-002, 4.233047e-002, 3.359844e-002, 2.452590e-002, 2.389275e-002, 1.940737e-002, -1.234851e-002, -2.320823e-003, 2.186800e-002, 6.174445e-003, -1.274213e-002, 1.635171e-002, -3.744116e-002, 2.751809e-002, -3.174533e-002, 7.344979e-003, 1.341378e-002, 1.784392e-002, 1.063482e-002, -1.714301e-002, -4.824293e-002, -5.960171e-002, -4.328781e-002, -1.618106e-002, 1.496270e-002, 3.195068e-002, 3.118174e-002, 4.163781e-002, 4.878333e-002, 2.120772e-002, -6.842958e-003, 1.197612e-002, 1.525066e-002, -1.306586e-002, -2.193369e-002, -1.921941e-002, -7.082088e-003, 8.935699e-003, -5.373723e-002, 2.305304e-002, 2.627265e-002, 1.298890e-002, -2.405684e-003, -1.404290e-002, -2.419997e-002, -2.633348e-002, -1.637974e-002, -2.238297e-003, 9.339408e-003, 1.790197e-002, 3.077621e-002, 4.685964e-002, 4.439637e-002, 9.387426e-003, 4.000792e-003, 1.348550e-002, -3.995094e-003, -9.904346e-003, -1.986405e-002, -2.669678e-002, 2.193133e-002, 2.435732e-002, -1.867031e-002, 1.679910e-002, 3.629056e-002, 2.919063e-002, -5.550249e-003, -1.589847e-002, -2.151472e-002, -1.755221e-002, -7.862633e-003, -1.206917e-003, -6.962708e-003, 6.509211e-003, 2.658886e-002, 3.760040e-002, 1.689500e-002, 1.600430e-003, 2.490401e-002, 1.652186e-002, -8.394466e-003, 1.665038e-002, -1.195275e-002, 5.314356e-004, 2.803534e-002, 1.201174e-002, 2.500432e-002, -2.047808e-002, 9.913386e-004, 2.106717e-002, 6.093908e-003, -7.769046e-003, -1.784155e-002, -1.406684e-002, -4.818819e-003, -2.817951e-003, -5.456419e-003, -4.882001e-003, 1.385177e-003, 3.810547e-003, -9.857200e-003, 5.639341e-004, 3.340544e-002, 8.346901e-003, -1.913895e-002, 1.791855e-002, -4.828148e-003, -6.993041e-003, -6.020177e-003, -6.493448e-002, -9.070499e-003},


© ISO/IEC 2004 — All rights reserved

--`,,```,,,,````-`-`,,`,,`,`,,`---

Copyright International Organization for Standardization
Provided by IHS under license with ISO
No reproduction or networking permitted without license from IHS
Not for Resale

{-4.960505e-002, -8.727947e-002, -1.052376e-001, -1.300676e-001, -7.287381e-002, 5.322296e-002, 3.677378e-002, 5.354504e-002, 6.166054e-002, -5.947512e-002, -1.520849e-001, -1.061988e-001, -8.292689e-002, -7.514976e-002, -1.078654e-002, -2.018785e-002, -5.300191e-002, 9.742164e-003, -3.894447e-004, -4.815960e-002, 2.335116e-002, 7.403338e-002, 1.185135e-002, -6.327474e-002, 1.235076e-001, 8.421044e-002, -2.857472e-002, -1.480372e-001, -5.330029e-002, 2.820631e-002, -2.321227e-002, 5.398514e-003, 4.579050e-002, 3.343089e-002, -5.255553e-002, 3.035639e-002, 7.620086e-002, 8.031059e-002, 9.072036e-002, 5.323195e-002, 7.816686e-003, 2.857181e-002, 3.968502e-002, -5.997780e-003, 2.871196e-002, 4.826816e-002, 1.034056e-002, -3.029380e-002, 1.070023e-001, 5.994618e-002, -7.750179e-002, -1.266359e-001, -1.134395e-002, -2.834035e-002, -4.899159e-002, -1.552307e-002, 1.710979e-002, 6.740498e-002, -1.946720e-002, 5.328070e-002, 9.569272e-002, 7.161160e-002, 4.741488e-002, 1.114628e-002, -1.870614e-002, 3.207868e-004, 5.607658e-002, 5.080389e-002, 5.419545e-002, 1.858614e-002, 1.264068e-003, 1.368938e-002, 6.711828e-002, 1.632218e-002, -5.473070e-002, -8.093603e-003, 5.229640e-003, -5.805311e-002, -4.291956e-002, -2.776914e-002, -1.033342e-002, 6.859678e-002, -1.582459e-002, -1.888711e-002, 5.796425e-002, 3.105305e-002, -1.616330e-002, -4.936545e-002, -5.792969e-002, -4.993465e-003, 7.931131e-002, 1.013582e-001, 3.416405e-002, -2.163251e-002, -1.828595e-003, 3.221252e-002, 3.352437e-002, 3.404997e-002, 5.959912e-002, 7.966181e-002, -1.798787e-002, -1.775908e-002, 3.847590e-004, -2.423685e-002, -2.151210e-002, 4.186144e-002, 1.807040e-003, -4.724371e-002, -2.472275e-002, -1.589011e-002, -4.247805e-002, -7.070657e-002, -7.022594e-002, -3.460573e-003, 8.216271e-002, 6.775951e-002, -3.081118e-002, -4.358293e-002, -1.378473e-002, 1.748444e-002, 5.218290e-002, 9.281132e-002, 1.427408e-001, 6.737861e-002, -4.409141e-002, 3.593430e-002, 2.734923e-002, -1.407079e-003, 9.244078e-003, 2.845511e-002, -2.936336e-002, 7.289888e-003, 2.637109e-002, -2.562985e-002, -6.904508e-002, -8.980496e-002, -7.765209e-002, -1.540877e-002, 2.818763e-002, -2.435710e-002, -8.357991e-002, -3.883273e-002, -1.153234e-002, -8.594681e-004, 3.300121e-002, 7.462902e-002, 1.157585e-001, -2.305563e-002, -1.192009e-001, 4.004190e-002, 4.399647e-002, 2.467453e-002, 2.754782e-002, 2.079924e-002, -6.596166e-002, -2.626171e-002, 1.300398e-001, 9.630479e-002, 2.903556e-002, -1.921700e-002, -3.096883e-002, -1.625638e-002, -2.810222e-002, -8.744971e-002, -1.047728e-001, -7.269382e-003, -3.225042e-003, -1.081366e-003, -5.895495e-002, -6.191064e-003, 8.745724e-002, -4.321651e-002, -7.267098e-002, 5.145630e-002, 2.409160e-002, 3.812100e-003, -4.493765e-002, -6.974237e-002, -7.579126e-002, -3.553267e-002, 1.127914e-001, 1.054915e-001, 3.046527e-002, -2.473456e-002, -4.728968e-002, -4.508519e-002, -6.582072e-002, -1.004199e-001, -7.659234e-002, 2.950509e-002, -3.325130e-004, 2.167223e-002, -1.095437e-001, -2.635905e-002, 5.317495e-002, 3.492928e-002, 5.907605e-002, 5.243702e-002, -2.431363e-002, -4.712761e-002, -7.361518e-002, -7.115615e-002, 9.323955e-004, 4.414787e-002, 7.849848e-002, 3.694511e-002, -1.679444e-002, -5.818521e-002, -6.112726e-002, -4.746285e-002, -6.055992e-002, -7.773682e-002, -3.835607e-002, 4.949454e-002, 1.517303e-003, 1.525130e-002, -1.064575e-001, -4.968751e-002, -2.136207e-002, -3.092508e-002, -3.293408e-002, 6.309288e-003, 5.088319e-003, -2.734922e-002, -1.043024e-001, -7.524703e-002, 3.109059e-002, 8.444723e-002, 5.088971e-002, -1.574765e-002, -4.216957e-002, -4.909618e-002, -2.616390e-002, -6.556833e-003, -2.312938e-002, -3.812968e-002, -3.592223e-003, 4.557985e-002, -1.896835e-002, -9.520593e-003, -8.219895e-002, -5.842465e-002, -3.698996e-002, -2.566713e-002, -5.762715e-003, -8.494890e-003, -1.798380e-002, 1.255357e-002, -4.734504e-002, -2.432978e-002, 2.962596e-002, 6.095907e-002, 2.519221e-002, -3.013112e-002, -5.485520e-002, -2.046511e-002, 2.144572e-002, 2.662598e-002, 1.272707e-002, -4.543135e-003, 1.575453e-002, 2.398877e-002, -4.216493e-002, -1.479244e-002, -3.524741e-002, -2.055118e-002, -1.092415e-003, 7.622524e-003, -6.724040e-003, -3.110864e-002, -5.739938e-002, -4.983139e-002, -6.922935e-002, -2.818173e-002, 2.328359e-002, 3.856472e-002, 1.944955e-002, -1.635519e-002, -4.771051e-002, -4.669002e-004, 5.005941e-002, 4.643436e-002, 3.582158e-002, 1.723781e-002, 1.494790e-002, 2.219092e-002, -5.415049e-003, -8.309281e-003, -2.424240e-002, -4.888102e-004, 3.669725e-002, 3.937223e-002, 2.372247e-002, 5.427849e-003, -4.812666e-002, -5.295538e-002, -1.524207e-002, 3.386734e-002, 7.666570e-002, 6.686711e-002, 3.247545e-002, 4.355486e-003, -4.221085e-003, 1.677301e-002, 4.757009e-002, 4.774628e-002, 4.317571e-002, 1.508670e-002, -1.252106e-002, 2.840528e-002, 3.400231e-002, -1.033349e-002, -2.584064e-002, -1.393570e-002, 1.179473e-002, 2.185222e-002, 1.212631e-002, -5.425860e-003, -4.412469e-002, -3.687398e-002, -9.789474e-004, 3.788534e-002, 5.114553e-002, 3.855365e-002, 1.455160e-002, 9.299204e-003, 2.571015e-002, 1.930134e-002, 2.366838e-002, 4.144085e-002, 5.044988e-002, -1.782566e-003, -3.727231e-002, 7.831708e-003, 3.205508e-002, -2.595911e-002, 1.654053e-002, 3.271234e-002, 2.725245e-002, 1.419426e-002, 2.820244e-003, -7.137061e-004, 5.764339e-003, 4.683160e-003, 2.390861e-003, 3.323199e-002, 4.610076e-002, 2.320804e-002, 3.296644e-004, -5.190359e-003, 8.774969e-003, -1.372492e-002, -1.980208e-002, 2.908871e-002, 5.535944e-002, -1.282452e-002, -3.982412e-002, -1.213479e-002, 5.668131e-003, -4.045638e-002, 1.169766e-002, 8.302140e-003, -1.242065e-002, -1.771062e-002, -9.572532e-003, 1.980469e-002, 4.261478e-002, 3.674133e-002, 2.495544e-002, 1.930937e-002, 1.929537e-002, 2.744778e-002, 1.145091e-002, 1.547997e-003, -1.013648e-002, -4.398205e-002, -3.823781e-002, 2.564035e-002, 5.679896e-002, -2.059767e-003, -2.323799e-002, -3.486258e-002, -4.177502e-003, -2.041796e-002,

© ISO/IEC 2004 — All rights reserved


Copyright International Organization for Standardization
Provided by IHS under license with ISO
No reproduction or networking permitted without license from IHS
Not for Resale

5.155368e-003, -1.728834e-003, 1.380215e-002, 2.344660e-002, 3.258524e-002, 2.720164e-002, 3.328502e-002, 3.730223e-002, 2.894150e-002, 1.006089e-002, -1.737949e-002, -3.643876e-002, -5.645818e-002, -3.045284e-002, -6.480852e-003, -2.504216e-002, -2.068182e-002, 2.202892e-002, 3.971874e-002, 1.755701e-002, 1.262426e-002, -3.056486e-002, -4.502981e-003, 4.142597e-003, 1.030107e-002, -8.898416e-003, -5.255169e-003, 1.527779e-002, 2.832392e-002, 2.923411e-002, 3.749458e-002, 4.634311e-002, 3.984682e-002, 3.064999e-002, 2.282781e-002, 1.057529e-002, 2.923588e-003, -8.719558e-004, 3.873615e-004, -3.703430e-004, 2.776412e-003, 1.590823e-002, 1.900739e-002, 4.041846e-002, 2.063240e-002, -8.872467e-003, 8.949973e-003, 2.903177e-002, 1.336431e-002, -2.963989e-002, -2.894821e-002, 4.617119e-003, 3.571367e-002, 3.563627e-002, 2.363541e-002, 6.078876e-003, -1.519436e-002, -3.558225e-002, -4.009611e-002, -2.205607e-002, 3.423228e-003, 5.432209e-003, -2.209763e-003, 5.863676e-003, 2.260042e-003, -1.731690e-002, -3.954849e-003, 2.506090e-003, 3.422522e-003, 1.019070e-002, 1.300964e-002, 2.579345e-002, 3.615597e-002, -1.386144e-002, -3.423022e-002, 1.789751e-003, 5.233634e-002, 6.525331e-002, 4.746034e-002, 1.214289e-002, -2.125605e-002, -4.820177e-002, -4.298010e-002, -1.518342e-002, 3.564765e-003, -2.191984e-002, -2.818941e-002, -7.812098e-003, -6.951305e-003, -4.259956e-002, -2.307432e-002, -5.264025e-002, 3.547417e-003, 2.577024e-002, -8.940117e-004, -1.431150e-002, 4.448405e-002, 6.986433e-003, -3.959263e-002, -4.408727e-002, -1.395904e-002, 8.493951e-003, 8.205651e-003, -6.013318e-003, -1.623973e-002, -1.679654e-002, 3.354164e-003, 2.410851e-002, 7.681124e-003, -2.915212e-002, -2.898395e-002, -1.202897e-004, 1.152857e-003, -1.728189e-002, -1.281220e-002, -5.259174e-002, 1.193176e-002, 1.588184e-002, -4.127271e-003, -3.830913e-002, 2.352218e-002, 1.070509e-002, -1.796032e-002, -3.755914e-002, -3.659349e-002, -3.149562e-002, -2.394313e-002, -2.519648e-002, -2.652496e-002, -6.853621e-003, 3.277414e-002, 4.445264e-002, 1.645784e-002, -1.245773e-002, 1.600692e-003, 2.005539e-002, 2.146204e-002, 1.793061e-002, 3.174419e-002, -1.545344e-003, 2.105951e-002, -1.760954e-003, 1.172999e-002, -3.672003e-002, -8.266386e-003, -6.856933e-003, 1.109594e-003, 8.012905e-003, 7.059468e-003, 4.881049e-003, 5.202368e-003, -4.850078e-003, -1.287266e-002, 3.439124e-003, 2.681346e-002, 3.386004e-002, 1.885756e-002, 3.688317e-003, 1.694128e-002, 1.605789e-002, 8.795058e-003, 1.636328e-002, 4.767381e-002, 1.151197e-002, 2.638869e-002, 7.889845e-004, 2.530583e-002, -6.367376e-003, -3.351251e-002, -2.972320e-002, -8.534790e-003, 1.909268e-002, 3.430560e-002, 3.022288e-002, 2.402846e-002, 8.610462e-003, -2.737599e-003, -8.555363e-003, -4.089366e-003, 1.492803e-003, -1.222390e-002, -8.188614e-003, -1.052443e-002, -2.398052e-002, -4.456774e-002, -3.133608e-002, -1.951982e-002, -4.073034e-002, 5.673609e-003, 1.951758e-003, 2.356138e-002, 3.085435e-002},
{4.234853e-002, 2.848292e-003, -8.648608e-002, -1.200551e-001, 3.161969e-003, -2.192197e-003, 1.505069e-002, 1.111757e-002, -6.410816e-003, 4.630103e-002, -3.352940e-002, -3.416339e-002, 3.068010e-003, 5.349274e-002, 4.491010e-002, 1.942127e-002, 5.379145e-002, 9.262457e-002, 9.540939e-002, 3.415046e-002, -1.597381e-002, -1.781070e-002, -1.173224e-002, -3.749084e-002, -4.590471e-002, -7.363605e-002, -1.178186e-001, -7.733132e-002, 3.029256e-002, -5.072593e-003, 2.877530e-002, 2.045190e-002, -1.039038e-002, 1.510941e-002, -5.839000e-002, -9.774055e-002, -4.662849e-002, -1.784684e-002, -2.420806e-002, -3.243631e-002, -2.574528e-002, -1.161043e-002, 1.053914e-002, 6.168520e-003, -1.178796e-002, -2.676102e-003, 5.797105e-003, -3.782989e-002, -1.081404e-002, -3.729390e-002, -4.068601e-002, 5.377792e-003, -3.152366e-003, -5.455543e-003, 2.235462e-002, 9.072682e-003, -2.098610e-002, -2.278090e-002, -3.024764e-002, -9.539880e-002, -4.286654e-002, 2.048873e-002, 4.413725e-002, 4.758817e-002, 3.367668e-002, 1.749489e-002, 2.737038e-003, -1.873378e-003, 8.116245e-003, 2.544360e-002, 4.142192e-002, -1.916056e-002, 3.336721e-002, 2.518992e-002, 3.348416e-003, -2.724576e-002, -4.727213e-002, -1.619764e-003, 1.958609e-002, 1.682611e-003, -1.492510e-002, -2.795965e-002, -1.951589e-003, -3.231153e-002, -2.876777e-002, 3.690745e-002, 8.945840e-002, 1.064443e-001, 8.373204e-002, 4.879259e-002, 1.547123e-002, -5.956146e-003, 3.284446e-002, 4.712774e-002, 6.261636e-002, -1.726950e-002, 3.110289e-002, 4.418575e-003, -4.036892e-002, -7.119969e-002, -4.341935e-002, -1.425358e-003, 2.343225e-002, 3.772603e-003, 1.393655e-002, 7.148065e-003, -2.676177e-003, 3.746663e-002, 2.009333e-002, 4.089684e-002, 8.190396e-002, 9.869299e-002, 7.543852e-002, 3.362648e-002, 7.029653e-003, 7.345524e-003, 4.622993e-002, 3.036987e-002, 4.879333e-002, -1.152645e-002, -1.613924e-002, -4.187876e-002, -3.153234e-002, -5.599674e-003, -3.566910e-003, 7.746133e-003, 6.182652e-003, -4.853507e-003, 2.039628e-002, 3.207274e-002, 1.506402e-002, 2.938026e-002, 3.738812e-002, 5.252404e-002, 5.964914e-002, 5.381639e-002, 3.036861e-002, -2.123556e-003, -1.221302e-002, 1.663292e-002, 3.440490e-002, -2.406341e-003, 2.967464e-002, 9.547537e-003, -7.066296e-002, -1.815844e-002, 4.265020e-002, 7.543209e-003, -2.786375e-002, -1.306196e-002, -6.806101e-003, 6.648593e-003, 2.915077e-002, -2.662347e-002, -3.047273e-002, 1.205850e-003, -1.667355e-002, -2.782070e-002, -3.424323e-002, -4.825285e-002, -5.860895e-002, -6.124409e-002, -3.570322e-002, -3.088664e-004, 1.157217e-002, -1.936829e-002, 2.187916e-002, 3.742779e-002, -3.843112e-002, 5.917465e-002, 1.074412e-001, 1.620274e-002, -2.543400e-002, -1.248466e-002, -2.985317e-002, -3.347264e-002, 1.451127e-002, -2.340730e-002, 8.513263e-003, 7.393507e-002, 1.788176e-002, -3.545870e-002, -7.254129e-002, -9.984123e-002, -9.944036e-002, -7.497790e-002, -3.911850e-002, -1.214907e-002, -4.832415e-003, -3.255877e-002, 1.375537e-002, 3.861603e-002,


© ISO/IEC 2004 — All rights reserved

--`,,```,,,,````-`-`,,`,,`,`,,`---

Copyright International Organization for Standardization
Provided by IHS under license with ISO
No reproduction or networking permitted without license from IHS
Not for Resale

9.919178e-003, 7.869097e-002, 1.328010e-001, 1.014567e-001, 8.900901e-002, 7.738719e-002, -1.971358e-002, -8.864112e-002, -3.999571e-002, 5.508775e-002, 1.489838e-001, 1.825363e-001, 6.877020e-002, 1.688593e-002, -6.089465e-003, -3.100102e-002, -4.432069e-002, -3.055102e-002, -1.435808e-002, -1.173239e-002, -2.091949e-002, -3.827553e-002, 1.042400e-002, 1.049046e-002, -1.898661e-002, 5.571808e-003, 5.127459e-002, 6.600735e-002, 4.074856e-002, 4.913476e-002, 1.189437e-002, -5.327422e-002, -4.491159e-002, -5.638067e-004, 7.675726e-002, 9.612284e-002, -2.834397e-003, -1.919885e-002, 1.322305e-002, 1.561321e-002, 7.076301e-003, 1.929937e-003, -3.292299e-003, -2.279115e-002, -4.628218e-002, -5.247102e-002, -2.012231e-003, -1.171017e-002, -1.019590e-001, -8.599572e-002, -3.180295e-002, 2.358310e-002, 6.980146e-002, 9.107850e-002, 6.948027e-002, 9.750399e-003, 3.309616e-002, 9.914725e-002, 6.183881e-002, -1.635760e-002, -9.579822e-002, -1.091749e-001, -6.241148e-002, 1.203901e-003, 2.673156e-002, 2.514537e-002, -2.750176e-003, -3.588127e-002, -5.393462e-002, -4.789915e-002, -4.415959e-003, -1.750796e-002, -1.025327e-001, -6.853436e-002, -3.532336e-002, -9.971416e-003, 4.017517e-003, 1.445166e-002, 3.986226e-002, -9.471563e-003, -2.945003e-002, 2.609162e-002, 4.002730e-002, -7.828603e-003, -7.175892e-002, -1.073705e-001, -9.093593e-002, -1.887037e-002, 2.964407e-002, 3.043702e-002, -1.698177e-003, -4.415875e-002, -3.667547e-002, -3.708997e-002, 4.897230e-003, 1.406434e-002, -2.261659e-003, 3.950021e-002, 2.286092e-002, -1.219689e-002, -3.128524e-002, -1.683962e-002, 4.256212e-002, 5.564632e-002, -2.658890e-002, -5.372181e-002, -1.908255e-002, 3.087542e-002, 4.002751e-002, 8.225649e-003, -2.921474e-002, -9.021367e-003, 2.735400e-002, 2.502561e-002, 1.437087e-003, -2.775062e-002, 6.583411e-003, -3.225465e-002, 1.767582e-002, 3.638854e-002, 1.600146e-002, 5.851052e-002, 2.637283e-002, -2.670944e-002, -4.852645e-002, -2.340316e-002, 3.396142e-002, 7.154709e-002, -1.486860e-002, -9.006945e-002, -1.007031e-001, -5.663702e-002, 1.452417e-002, 3.606673e-002, -6.521455e-003, -1.080147e-002, 1.414110e-002, 2.628959e-002, 1.052901e-002, 8.505835e-003, 4.073976e-002, -1.741508e-002, 9.005134e-003, 1.051064e-002, -6.003676e-002, 5.690912e-002, 9.094758e-002, 3.428512e-002, -3.482121e-002, -6.610772e-002, -3.381681e-002, 2.221270e-003, -2.378946e-002, -4.942915e-002, -3.057918e-002, -2.835499e-003, 2.478247e-002, -1.101616e-002, -6.765083e-002, -5.179219e-002, -4.671440e-003, 2.197705e-002, 2.481724e-002, 3.966544e-002, 5.057719e-002, -1.666600e-002, -4.128781e-002, -2.451963e-002, -1.142527e-001, 2.770807e-002, 9.681044e-002, 6.618441e-002, 2.821547e-003, -3.956940e-002, -2.486371e-002, -1.784172e-003, -6.566643e-003, -2.834576e-002, -2.906982e-003, 2.275548e-002, 3.936296e-002, 3.400091e-003, -4.847239e-002, -5.377899e-002, -1.197501e-002, 2.731583e-002, 2.987768e-002, 4.868579e-002, 4.600269e-002, -2.982170e-003, -4.294286e-002, -2.097008e-002, -1.034589e-001, -1.825152e-002, 7.926363e-003, 2.202987e-003, -1.225597e-002, -1.097216e-002, 1.652614e-002, 2.951436e-002, 2.696909e-002, -9.106960e-003, -2.369082e-002, -1.957628e-002, -8.258602e-003, 1.061000e-002, 1.783092e-002, -2.372406e-002, 5.566084e-004, 4.092436e-002, 2.601755e-002, 2.549406e-002, 2.268072e-002, 1.634759e-002, -1.208165e-002, 4.744925e-003, -6.971071e-003, 4.327080e-002, 3.080841e-002, -4.150388e-003, -2.842010e-002, -2.045202e-002, 1.149913e-002, 2.055169e-002, 3.563139e-003, -3.327381e-002, -5.574487e-002, -5.478838e-002, -2.073552e-002, 3.930477e-002, 4.524386e-002, -3.196889e-003, 6.294046e-003, 3.834028e-002, -6.400073e-004, -2.207808e-002, -4.375320e-003, 1.087299e-002, 1.494283e-002, 9.047964e-003, 2.098114e-002, 3.611850e-002, -3.305416e-003, -4.568049e-002, -5.206126e-002, -1.020517e-002, 4.817339e-002, 6.700259e-002, 4.217774e-002, 3.785821e-003, -3.062095e-002, -3.876589e-002, -2.272443e-003, 3.651450e-002, 1.365762e-002, -1.749917e-002, 2.245774e-003, 1.573259e-002, -3.402570e-002, -3.038175e-002, -2.090571e-002, -1.480154e-002, 2.392316e-002, -2.985384e-002, 2.077030e-004, 4.045054e-003, -3.686944e-002, -7.962411e-002, -8.404335e-002, -3.282760e-002, 4.072637e-002, 7.227218e-002, 3.659884e-002, -2.788426e-002, -6.007430e-002, -4.656165e-002, -1.398774e-002, 5.246785e-003, -3.930604e-002, -4.660969e-002, -1.476105e-002, -1.914690e-002, -3.523746e-002, 3.328520e-002, -1.512086e-002, -1.546235e-002, 3.016007e-002, -4.004535e-002, -7.666996e-003, 6.806694e-003, -6.436777e-003, -2.205412e-002, -1.793520e-002, 2.989050e-002, 8.768794e-002, 9.171698e-002, 3.353851e-002, -4.273721e-002, -7.648765e-002, -6.212724e-002, -3.036346e-002, -3.005690e-002, -5.285408e-002, -4.551725e-002, -1.800240e-002, -2.007305e-002, 2.354412e-002, 7.170596e-002, -1.372008e-002, -1.243966e-002, 1.707554e-002, -2.135910e-002, -1.511459e-002, 1.004310e-003, 2.370620e-004, -1.957420e-003, 1.497833e-002, 5.996639e-002, 9.915961e-002, 9.506225e-002, 3.425345e-002, -2.581310e-002, -4.714667e-002, -3.665431e-002, -2.117854e-002, -3.407744e-002, -4.457879e-002, -3.378022e-002, -1.018199e-002, 6.355883e-003, 5.323341e-002, 2.771847e-002, -1.326413e-002, -2.426313e-004, 6.815280e-004, 4.943326e-003, -6.114446e-003, -1.322559e-003, -1.077527e-002, -2.050736e-002, -1.440842e-002, 9.355560e-003, 2.962817e-002, 4.062824e-002, 2.731976e-002, 1.331934e-002, 1.015518e-002, 5.984170e-003, -3.847293e-003, -2.156114e-002, -4.075313e-002, -1.892918e-002, -2.415635e-004, 2.093504e-002, 2.600824e-002, -1.437305e-002, 5.665089e-003, 1.014764e-002, -8.506784e-003, 2.929017e-002, 3.126864e-002, 2.240012e-002, -5.591399e-003, -1.778501e-002, -3.060158e-002, -2.498535e-002, -1.155146e-002, 1.538999e-002, 3.839797e-002, 5.427706e-002, 6.547239e-002, 4.879096e-002, 2.367831e-002, 4.080928e-003, -1.032771e-002, 3.974100e-004, 3.022303e-003, 9.334323e-003, -7.086524e-003, -1.655613e-002, 4.326900e-002, 4.414940e-002, 2.011668e-003, 2.674136e-002},

© ISO/IEC 2004 — All rights reserved


Copyright International Organization for Standardization
Provided by IHS under license with ISO
No reproduction or networking permitted without license from IHS
Not for Resale

{-1.268345e-001, -9.843748e-002, -6.104495e-002, -4.244811e-002, -1.107127e-002, 4.855360e-002, 4.022399e-002, 3.209218e-002, 7.620757e-002, 9.058104e-002, 7.080456e-002, 6.254235e-002, -6.080235e-004, -3.582717e-002, -9.156541e-002, -7.876988e-002, -4.583486e-002, -8.015059e-002, -9.957978e-002, -3.147869e-002, -2.740248e-002, -6.456362e-002, -4.263901e-002, -1.823554e-002, 6.859797e-002, 7.911980e-002, 4.478413e-002, -7.257993e-003, 3.623799e-002, 5.729127e-002, 1.534173e-002, 1.022389e-002, 4.440681e-002, 7.478698e-002, -7.509980e-003, 1.575553e-002, 3.687557e-002, 5.522888e-002, 7.341594e-002, 8.723788e-002, 9.175883e-002, 4.833654e-002, -2.433954e-002, -1.066827e-003, -1.021995e-002, -4.446824e-002, -1.512095e-002, -5.510951e-003, 1.325798e-001, 9.542118e-002, 1.147756e-002, -3.777911e-002, 7.412846e-003, 1.019480e-002, -9.189382e-003, -9.345505e-003, -9.366318e-003, 3.119731e-002, -5.607710e-002, -1.109404e-001, -5.452566e-002, 6.430679e-003, 5.913552e-002, 9.274922e-002, 1.062904e-001, 8.411733e-002, 1.046739e-002, -5.504039e-003, -1.081190e-002, -6.354746e-003, 1.676947e-002, 2.593268e-002, 6.332039e-002, 6.678366e-003, -8.557365e-002, -8.685981e-002, -3.572149e-002, -3.127681e-002, -6.208416e-003, -4.272388e-003, -3.520158e-002, -1.794168e-002, -2.248582e-002, -1.086431e-001, -1.332895e-001, -7.070741e-002, -8.636258e-004, 4.590080e-002, 7.492850e-002, 5.582359e-002, -1.039471e-002, -1.590480e-002, 1.471476e-002, 2.696782e-002, 3.291952e-002, 4.833169e-002, -3.071719e-002, -9.286444e-002, -1.135375e-001, -5.818859e-002, -6.034989e-002, -3.255860e-002, 2.894815e-002, 5.371361e-003, -2.376411e-002, -1.251072e-002, -6.082879e-003, 1.583826e-002, -4.511457e-002, -9.144734e-002, -7.699358e-002, -2.489771e-002, 2.366985e-002, 2.451214e-002, -8.781829e-004, 1.099438e-002, 6.647909e-002, 5.340040e-002, 2.620793e-002, 4.985942e-002, -4.887719e-002, -5.711184e-002, -1.578544e-002, -3.267502e-002, -6.628982e-002, 7.337690e-003, 6.013636e-002, 1.667444e-002, 4.752760e-004, -4.716006e-004, -5.104037e-002, -9.046996e-004, 7.080759e-002, 3.578811e-002, -1.642432e-003, 2.164667e-003, 2.807304e-002, 3.297396e-002, 1.090107e-002, 5.075296e-002, 9.761818e-002, 5.568481e-002, 3.019133e-003, 3.604307e-002, -1.563262e-002, 1.696083e-002, 4.006761e-002, -2.557085e-002, -2.120960e-002, 8.353162e-003, 1.203796e-002, -2.119115e-002, -1.396972e-002, -2.762780e-002, -1.006764e-001, -1.038838e-001, -7.703000e-003, 4.298669e-002, 3.335298e-002, 1.664924e-002, 1.930331e-002, 1.525567e-002, 1.723233e-002, 6.767140e-002, 1.068668e-001, 4.734484e-002, -8.753907e-003, 1.479030e-002, -6.413312e-003, 2.562522e-002, 4.491622e-002, 2.998136e-002, 3.929039e-002, -2.971507e-002, -4.918434e-002, -5.426572e-002, -3.244461e-002, -8.163990e-003, -2.721463e-002, -4.278183e-002, -3.337185e-002, 5.065838e-004, 2.880641e-002, 2.444188e-002, 1.178260e-002, 4.427666e-003, 9.104633e-003, 6.838389e-002, 9.168076e-002, 2.374265e-002, -3.456761e-002, -6.554674e-003, -1.041759e-002, -3.174722e-003, 1.046137e-002, 3.729341e-002, 5.415602e-002, 2.794821e-002, 4.719999e-002, -1.072092e-002, -5.063337e-002, -5.038420e-002, -8.855903e-003, 5.142604e-002, 2.811287e-002, 6.045954e-004, 3.098085e-002, 4.341265e-002, 1.859443e-002, -7.658016e-003, -9.830549e-004, 5.131856e-002, 6.440141e-002, 1.046281e-002, -3.938741e-002, 8.491791e-003, -1.531913e-002, -2.180215e-002, -2.027583e-002, 1.551748e-002, 4.641369e-002, 5.714766e-002, 3.303806e-002, -2.111472e-002, -1.014261e-002, 2.388850e-002, -2.249813e-003, 1.515793e-002, 1.701247e-002, -7.871635e-003, 7.662031e-003, 2.193905e-002, 4.573142e-003, -2.494895e-002, -2.592568e-002, 2.170935e-002, 3.874059e-002, 7.799452e-003, -2.038242e-002, 3.473597e-002, 1.563739e-002, 1.867976e-002, -1.087519e-003, -9.915352e-003, -3.397581e-002, -4.702892e-002, -2.380626e-002, -2.937675e-002, -1.759481e-002, 4.032815e-002, 1.117788e-002, -9.650897e-003, -1.506901e-002, -2.669833e-002, -2.118844e-002, -2.412717e-002, -3.894944e-002, -6.045781e-002, -5.733557e-002, -2.418341e-002, 1.381318e-002, 1.254804e-002, 6.051405e-003, 3.207372e-002, 4.678214e-002, 4.249214e-002, -8.856620e-003, -3.236964e-002, -5.444058e-002, -2.972137e-002, 4.839246e-002, 6.507984e-003, -6.126939e-002, -1.695384e-002, 3.662656e-003, 4.862566e-003, -1.577806e-002, -2.874389e-002, -1.341349e-002, -2.225117e-002, -5.483543e-002, -8.740736e-002, -8.917651e-002, -6.806762e-002, -7.030607e-003, -2.289675e-003, -1.199116e-002, -2.534180e-002, 4.279512e-002, 4.138355e-002, -4.217154e-003, -4.320107e-002, -6.110461e-002, -2.651942e-002, 6.167867e-002, 2.936258e-002, -5.990239e-002, -5.063587e-002, -2.578958e-002, 4.258773e-003, 2.136612e-003, -1.951572e-002, 1.230545e-003, 1.765946e-002, -2.347845e-002, -8.616689e-002, -1.104749e-001, -1.021850e-001, -1.067906e-002, -1.591684e-002, -3.373834e-002, -6.244457e-002, 8.890575e-003, 6.589597e-002, 7.901721e-002, 3.239716e-002, -4.054161e-002, -3.882438e-002, 2.190740e-002, 1.156023e-002, -5.378379e-002, -3.723144e-002, 8.472989e-003, 5.079649e-002, 5.021157e-002, 1.124570e-002, 1.610975e-002, 4.716928e-002, 2.401518e-002, -5.734354e-002, -1.120993e-001, -1.061861e-001, -9.165780e-003, -1.928008e-002, -1.001213e-002, 4.483278e-003, -8.508130e-002, -1.126457e-002, 3.057523e-002, -7.953939e-003, -4.709983e-002, -3.265465e-002, 3.239801e-002, 3.742367e-002, 5.535842e-003, -1.034528e-003, 8.404236e-003, 6.157723e-002, 7.723994e-002, 1.359978e-003, -3.396961e-002, 2.168754e-002, 6.133701e-002, -1.748097e-002, -9.070433e-002, -8.161543e-002, -3.858887e-003, -1.343082e-002, 2.781190e-003, 5.129207e-002, -6.541721e-002, 1.757132e-002, 4.033492e-002, 5.773039e-003, -5.257645e-004, 6.746169e-003, 3.799077e-002, 4.121428e-002, 1.271070e-002, -2.105904e-002, -1.113164e-002, 6.138368e-002, 1.015244e-001, 1.441317e-002, -9.045919e-002, -3.785922e-002, 5.218881e-002, 1.495029e-002, -5.523835e-002, -3.524735e-002, 3.746438e-003, -4.736401e-003, -1.337498e-002, 1.519323e-002, -


© ISO/IEC 2004 — All rights reserved

Copyright International Organization for Standardization
Provided by IHS under license with ISO
No reproduction or networking permitted without license from IHS
Not for Resale

2.126787e-002, 2.095781e-002, -1.123179e-002, -5.246283e-002, -5.605328e-002, -2.222634e-002, 1.549231e-002, 1.726809e-002, 8.336077e-004, -2.841994e-002, -3.225190e-002, -1.680235e-002, 2.368193e-002, -4.316312e-003, -9.225433e-002, -7.061827e-002, 1.931313e-002, 1.667404e-002, -3.405599e-002, 5.795429e-003, 4.204107e-003, 1.548829e-002, -3.024319e-002, -1.280257e-002, -1.675447e-002, -1.309558e-003, -1.118116e-002, -3.055399e-002, -2.879880e-002, -1.039162e-004, 3.268961e-002, 3.540091e-002, 2.021996e-002, -3.910145e-003, -2.145651e-002, -2.093446e-002, 3.783914e-003, 3.185032e-002, 8.140750e-003, -2.241240e-002, 7.000724e-003, 1.786981e-003, -1.335834e-002, 2.654509e-002, -4.733105e-003, 2.721484e-002, -1.561308e-002, 2.043508e-002, -8.569608e-003, 1.320474e-002, 7.576716e-003, -1.029428e-002, -1.450681e-002, -4.700734e-003, 1.800843e-002, 2.698403e-002, 2.416228e-003, -2.735063e-002, -4.810380e-002, -4.231788e-002, -1.031104e-003, 6.004571e-002, 8.467838e-002, 4.721027e-002, 1.725559e-002, 1.656166e-004, 2.209740e-002, 2.744057e-002, -5.285689e-003, 3.897340e-002, 1.377347e-002, 8.052624e-002, -7.292262e-003, 1.121792e-002, 4.125717e-003, -1.793021e-002, -1.873711e-002, 1.783765e-003, 2.905931e-002, 4.341973e-002, 3.511381e-002, -5.114113e-003, -4.583770e-002, -5.031765e-002, -1.210732e-002, 5.026245e-002, 7.799174e-002, 6.300696e-002, 3.267580e-002, 1.248038e-002, 3.729227e-002, 2.226222e-003, -4.080730e-003, 2.884570e-002, -2.894673e-003, 6.219908e-002, -1.861214e-002, 5.463476e-003, 9.433165e-003, 1.394127e-003, 5.796200e-003, 2.653099e-002, 3.852757e-002, 4.712071e-002, 4.699898e-002, 1.726292e-002, -1.942785e-002, -3.449784e-002, -1.939498e-002, 7.923114e-003, 2.979927e-002, 4.587757e-002, 2.709083e-002, 9.379457e-003, 2.655901e-003, -2.916803e-002, -6.090239e-003, 3.002247e-003, -3.990379e-002, -4.062724e-003, -2.459222e-002, 2.041759e-002, 4.229003e-002, 3.607940e-002, 1.618133e-002, 1.508808e-002, 1.210231e-002, 1.963295e-002, 4.406837e-002, 4.453164e-002, 2.033015e-002, -5.705263e-003, -1.489662e-002, -8.679404e-003, 5.802426e-003, 4.057893e-002, 2.682431e-002, -1.127273e-002, -1.691485e-002, -4.105262e-002, 1.358657e-002, 3.663214e-002, 2.676817e-002, -4.502494e-003, -2.452843e-002, 2.898302e-002, 7.091195e-002, 5.765145e-002, 1.727794e-002, -2.087012e-002, -3.611165e-002, -2.966017e-002, 1.082171e-003, 2.868871e-002, 3.101414e-002, 1.042475e-002, -5.967256e-003, -2.825315e-002, -7.542516e-003, 3.561958e-002, 9.115386e-003, -2.215759e-002, -1.475305e-002, -3.351361e-003, -1.701664e-002, -5.906958e-003, 5.565088e-002, 1.229437e-002, -4.130106e-002, -1.017015e-002, 3.437072e-002, 4.952647e-002, 4.709860e-003, -4.532192e-002, -6.640207e-002, -5.807230e-002, -2.897131e-002, 7.825092e-003, 1.549662e-002, -5.817192e-004, -2.182666e-002, -5.387121e-002, -2.816990e-002, 1.149905e-002, -1.492573e-002, -4.389263e-002, -1.165903e-002, 5.076890e-003, -6.960579e-002, -9.613737e-002, -6.191053e-002, -7.087451e-002},
{8.054218e-002, 7.939319e-002, 7.856892e-002, 7.236997e-002, -6.814672e-002, -1.443298e-001, -8.696946e-002, -1.029887e-001, -9.336703e-002, -4.536570e-002, -2.285291e-002, -1.737453e-002, 1.447160e-002, 2.310494e-002, 1.860231e-002, 1.663482e-002, -2.489015e-002, -4.717465e-002, -9.645805e-003, 2.469869e-003, -1.805372e-002, -1.637772e-002, -2.568898e-002, 6.334533e-003, -1.274053e-003, -1.404409e-002, 3.848104e-002, 6.140688e-002, -1.040677e-001, -5.755480e-002, 9.443399e-003, -1.381655e-002, -2.861792e-002, -5.085646e-002, -3.110072e-002, -4.145184e-002, -3.745964e-002, -4.622494e-003, 3.026003e-002, 4.936776e-002, 3.550668e-002, 2.524040e-002, 5.175490e-002, 3.015570e-002, -7.163727e-003, 2.463785e-002, -1.968358e-002, 2.224491e-002, -8.396417e-002, -4.573808e-002, 5.182231e-002, 2.897511e-002, -1.040729e-001, 3.744866e-002, 6.562253e-002, 2.632860e-002, 4.454097e-002, -2.466813e-002, -1.825916e-002, 1.275452e-002, -1.745161e-002, -1.931041e-002, -4.038786e-003, -2.001320e-003, -1.407768e-002, -2.316817e-002, 1.167108e-002, 1.580224e-002, 2.320188e-003, 2.829157e-002, -1.156487e-002, 1.782458e-002, -5.916510e-002, -7.545994e-003, 5.557178e-002, -4.705781e-002, -6.060558e-002, 7.848567e-002, 6.438906e-002, 9.969088e-003, 8.360887e-002, 2.792874e-002, -4.191353e-002, 5.367694e-002, 7.747440e-002, 2.768867e-002, 4.042231e-003, -2.669412e-002, -6.383457e-002, -8.413853e-002, -3.687789e-002, 4.896909e-003, 8.781473e-003, 1.268356e-002, -3.568195e-003, 2.591249e-002, -2.496806e-003, 4.288358e-002, 2.451932e-002, -8.773411e-002, -2.775372e-002, 3.332739e-002, -1.067969e-002, -5.635395e-002, 2.817993e-002, 6.227420e-002, -4.039280e-002, -2.851635e-002, 1.140927e-001, 1.213223e-001, 7.795468e-002, 2.406414e-002, -4.104307e-002, -7.478049e-002, -3.121286e-002, 1.637491e-002, 1.372787e-002, 8.474162e-003, 1.669132e-002, 3.164418e-002, 4.577445e-002, 5.894264e-002, -1.658070e-002, -4.482554e-002, 1.117130e-002, -1.931557e-002, -7.331774e-002, -9.424645e-002, -4.967927e-002, 4.544543e-003, -7.523370e-003, -2.541738e-002, 3.484035e-002, 9.487107e-002, 8.880794e-002, 5.073201e-002, -1.059220e-002, -4.871690e-002, -1.758291e-002, 8.247138e-003, 1.680423e-002, 1.260530e-002, 2.399082e-002, 2.651046e-002, 7.925656e-002, 6.621559e-002, 9.682332e-003, 6.532990e-002, 8.164437e-002, -1.375017e-002, -3.004843e-002, -1.035388e-002, -3.146339e-002, -3.833204e-002, -2.046270e-002, 7.613331e-002, 7.980673e-002, 2.129028e-002, -1.620408e-002, -4.029257e-002, -7.085532e-002, -6.620668e-002, -1.145602e-002, 2.415047e-002, 2.342847e-002, 5.948967e-003, 1.752659e-002, 1.595691e-002, 1.116903e-001, 4.627162e-002, -2.233596e-002, 2.429442e-002, 9.954649e-003, -1.393346e-002, 4.146886e-002, 3.710637e-002, -4.062836e-002, -5.526532e-002, -7.798054e-002, -9.498544e-003, 1.091233e-001, 7.182974e-002, 1.052600e-002, -1.930097e-002, -3.844300e-002, -1.133320e-002, 3.608678e-002, 3.287107e-002, 2.252532e-002, 8.472469e-004, 7.114411e-003, 1.914050e-002,

© ISO/IEC 2004 — All rights reserved


--`,,```,,,,````-`-`,,`,,`,`,,`---

Copyright International Organization for Standardization
Provided by IHS under license with ISO
No reproduction or networking permitted without license from IHS
Not for Resale

6.037198e-002, -5.233054e-002, -1.191815e-001, -6.564866e-002, 2.589601e-002, 6.702960e-002, 2.236475e-002, 1.732315e-002, -1.897685e-002, 2.221317e-002, -1.791961e-002, -1.035774e-001, -9.285678e-003, 5.743033e-002, 2.052232e-002, -2.202175e-002, -2.184514e-002, 9.054500e-003, 3.694972e-002, 1.740302e-002, 1.815358e-002, -6.136628e-003, 5.503868e-003, 3.140239e-002, 1.130546e-002, -8.981630e-002, -1.182225e-001, -2.521458e-002, 4.921445e-002, 2.246998e-002, -1.787267e-002, 4.469369e-002, 4.244337e-002, -2.663608e-002, -4.740696e-002, -9.581552e-002, -8.532642e-002, -5.491430e-003, 8.105892e-003, -3.361983e-002, -3.790653e-002, -8.330852e-003, 1.327413e-002, 1.293106e-004, 2.952951e-002, -7.952134e-003, 1.124374e-003, 4.295925e-003, -1.577447e-002, -4.992531e-002, -3.404575e-002, 1.650848e-002, 1.033284e-001, 1.104806e-001, 1.616833e-002, -1.848830e-002, 2.303158e-004, -1.458613e-002, 2.232949e-002, 1.501067e-002, -2.103146e-002, -1.545064e-002, 1.231905e-002, -3.511591e-003, -2.839885e-002, -1.307782e-002, -1.246668e-002, -3.028285e-004, 4.602506e-002, -3.145990e-002, -9.209380e-003, -2.846478e-002, -2.742525e-002, -4.018275e-002, 3.906352e-003, 2.534268e-002, 6.387372e-002, 4.949140e-002, -3.033280e-002, -3.307647e-002, 2.213862e-002, -7.231043e-003, -4.653612e-003, 2.877614e-002, 3.324644e-002, 9.069186e-003, 2.112345e-002, 4.009809e-002, 2.108713e-002, 1.259674e-003, -2.510053e-002, 7.236712e-003, 5.339895e-002, -6.292998e-002, 2.787527e-002, -1.830311e-002, -5.196959e-002, -7.245114e-002, -1.979177e-002, 2.184167e-002, 1.667430e-002, -1.031376e-002, -4.917702e-002, -8.007868e-004, 8.177428e-002, 5.811183e-002, 4.313036e-003, -1.378643e-002, -1.349563e-002, -1.817602e-002, 3.107961e-003, 4.036498e-002, 4.604617e-002, 8.610114e-003, -3.867870e-002, 1.578521e-002, 3.661953e-002, -6.289670e-002, 4.875439e-002, -2.423969e-002, -5.699644e-002, -7.418022e-002, -1.304065e-002, 2.906864e-002, 1.330613e-002, -2.528054e-002, -7.743853e-002, -4.981911e-002, 3.626007e-002, 5.107396e-002, 2.653164e-002, -2.131782e-002, -6.183458e-002, -5.441086e-002, -1.640831e-003, 4.724833e-002, 4.186478e-002, -1.408206e-002, -5.013155e-002, 2.988951e-002, 8.489761e-003, -3.638417e-002, 4.694852e-002, -2.657220e-002, -4.773473e-002, -5.349557e-002, 1.309642e-002, 6.564903e-002, 6.172983e-002, 1.927905e-002, -6.481626e-002, -7.959534e-002, -3.188299e-002, 1.344476e-002, 2.970288e-002, 3.891970e-003, -2.753267e-002, -1.982250e-003, 5.412053e-002, 7.440139e-002, 2.592054e-002, -4.622321e-002, -4.677272e-002, 4.099065e-002, -2.132772e-002, -6.483927e-003, 2.282288e-002, 1.027957e-002, -8.949063e-003, -1.842360e-002, 1.851082e-002, 5.805004e-002, 5.521001e-002, 1.466451e-002, -4.867137e-002, -7.651683e-002, -5.552979e-002, 1.366878e-002, 4.881002e-002, 4.079373e-002, 1.179666e-002, -2.158628e-002, 1.419733e-002, 4.847691e-002, -1.533159e-003, -6.653235e-002, -3.936855e-002, 2.552231e-002, -2.794602e-002, 9.057467e-003, -1.981159e-002, 2.787898e-002, 2.731272e-002, -2.658195e-002, -2.497040e-003, 7.559442e-002, 1.032669e-001, 5.456754e-002, -9.296382e-003, -4.515479e-002, -4.392211e-002, -4.271969e-003, 4.431939e-002, 7.335247e-002, 3.991606e-002, -1.956845e-002, -1.780836e-002, 2.071655e-002, -1.406854e-002, -5.526582e-002, -2.343130e-002, -1.090730e-002, 1.815526e-003, 1.359946e-003, -2.740820e-002, 1.832431e-002, -6.553756e-003, -9.055006e-002, -8.196185e-002, 1.152880e-002, 8.487536e-002, 8.519815e-002, 3.660879e-002, -1.896036e-003, -1.320807e-002, -2.432301e-003, 1.195307e-002, 1.772558e-002, -9.586416e-003, -4.237705e-002, -1.965061e-002, 3.797542e-002, 1.725897e-002, -2.113394e-002, -2.367324e-002, -2.662025e-002, 3.405898e-002, -1.825470e-002, -1.605652e-002, -1.127995e-002, 2.135602e-002, -1.949590e-002, -5.125582e-002, -2.830525e-002, 6.704705e-003, 2.416075e-002, 6.850549e-003, -8.661068e-003, 5.316357e-003, 2.988286e-002, 3.921460e-002, 3.044424e-002, -7.021827e-003, -4.564419e-002, -1.016813e-002, 5.536260e-002, 4.845652e-002, -2.224794e-003, -2.882307e-002, 8.768484e-003, 2.173591e-002, -4.240531e-002, 6.661046e-003, -4.189564e-002, 1.678527e-002, 2.100955e-002, 2.793339e-003, -3.647546e-003, -2.163944e-003, -6.638632e-003, -2.740606e-002, -2.354984e-002, 3.124580e-003, 3.309790e-002, 3.695600e-002, 2.133760e-002, -1.504509e-002, -4.341431e-002, 5.910290e-003, 5.282732e-002, 4.450773e-002, 1.722636e-003, -2.254073e-002, 6.762995e-003, -2.107288e-002, -4.824064e-002, 1.986844e-002, -2.062135e-002, -1.461541e-002, 1.291754e-002, 4.874234e-002, 4.497522e-002, 2.778616e-002, -9.795884e-003, -4.908833e-002, -5.103777e-002, -2.111085e-002, 1.183559e-002, 1.308870e-002, -6.435570e-004, -3.220559e-002, -3.303748e-002, -2.037064e-003, 1.492517e-002, 8.273618e-003, -1.082578e-004, -1.807381e-002, -2.848945e-002, -5.058903e-002, -2.160369e-002, -8.400043e-003, 2.241231e-002, -2.376589e-002, -1.276576e-002, 4.384548e-002, 6.928209e-002, 4.458057e-002, -2.120804e-003, -4.982066e-002, -6.472593e-002, -2.455117e-002, 2.078095e-002, 3.349877e-002, 1.137451e-002, -1.592432e-002, -2.411722e-002, -2.518376e-002, -2.251577e-002, -1.877407e-002, 3.833540e-003, -2.411496e-002, -3.767022e-002, -3.291885e-002, -9.032843e-003, -5.841799e-002, 1.739739e-002, 1.930569e-002, -2.253174e-003, 1.517826e-002, 3.875064e-002, 7.424969e-003, -4.555492e-002, -8.122460e-002, -9.306389e-002, -4.259797e-002, 1.691455e-002, 3.541582e-002, 2.079559e-002, 1.163625e-003, -8.101883e-004, -6.580814e-003, -3.216453e-002, -2.376829e-002, 3.009101e-003, -2.057071e-002, 7.037856e-003, -7.445512e-003, 5.667362e-003, -5.845697e-002, 8.760990e-004, 7.441305e-002, 5.226046e-002, 3.114894e-002, 2.354339e-002, -4.163179e-004, -4.396784e-002, -7.674292e-002, -8.635665e-002, -4.952890e-002, 2.029544e-003, 3.065167e-002, 3.471610e-002, 4.889150e-002, 6.646712e-002, 3.778282e-002, -3.647358e-003, 4.813929e-003, 1.091336e-002, 1.118562e-002, 6.012517e-002, 2.404029e-002, 5.439276e-002, 4.314817e-002, 5.840470e-002},


© ISO/IEC 2004 — All rights reserved

Copyright International Organization for Standardization
Provided by IHS under license with ISO
No reproduction or networking permitted without license from IHS
Not for Resale

{-1.376625e-001, -6.876841e-002, 3.581202e-002, 1.029010e-001, -3.439995e-002, 7.966920e-003, 7.425136e-002, 9.374810e-002, 4.995059e-002, -8.908967e-002, -8.720253e-002, -8.977057e-002, -7.976895e-002, -8.707459e-002, -8.262793e-002, -5.913193e-002, -4.974455e-002, -2.745373e-002, -7.357286e-002, -9.240036e-002, -5.005270e-002, -1.170866e-001, -3.627387e-002, -3.396439e-002, -2.128215e-003, 3.186541e-002, 1.082305e-001, 1.281461e-001, -2.207588e-002, -4.264065e-003, -4.961597e-003, 2.811443e-002, 3.662091e-002, -3.305108e-002, 4.695881e-003, 4.142909e-002, 6.993133e-002, 8.099448e-002, 7.308148e-002, 6.198903e-002, 5.506007e-002, 2.913576e-002, -4.018452e-002, -6.698688e-002, -6.481327e-003, -5.878132e-002, 1.557084e-002, -3.530561e-002, -5.180087e-002, -2.401387e-002, 5.896762e-002, 5.280765e-002, -1.531830e-002, -4.157462e-002, -3.984104e-002, -3.000317e-002, 2.632234e-003, 1.862543e-002, 5.243472e-002, 8.057573e-002, 8.728811e-002, 1.156278e-001, 1.206988e-001, 9.694464e-002, 7.354226e-002, 2.962189e-002, -4.116076e-002, -5.534579e-002, 1.974817e-002, -8.932188e-004, 3.155767e-002, -4.195926e-002, -1.672860e-001, -1.418038e-001, -4.157603e-002, -5.228060e-004, -2.595730e-002, -5.514246e-002, -4.390033e-002, -3.908688e-002, -2.200176e-002, 2.012102e-002, 7.267788e-002, 4.217436e-002, 6.864904e-004, 9.699956e-004, 6.427591e-003, -1.101351e-002, -2.985328e-002, -4.231431e-002, -7.296979e-002, -4.508154e-002, 4.103352e-002, 1.916656e-002, 2.950140e-002, -4.151712e-002, -2.374266e-001, -1.446628e-001, 5.621756e-003, 1.209594e-002, -2.650795e-002, -1.152576e-002, -7.346950e-003, -1.203270e-002, -1.316463e-002, 2.972224e-002, 7.870258e-002, 5.197709e-002, -4.194488e-002, -7.968347e-002, -9.050366e-002, -9.845616e-002, -8.946201e-002, -5.155008e-002, -3.097069e-002, 3.265215e-002, 6.295268e-002, 1.707769e-002, 1.300587e-002, -4.137748e-002, -7.657742e-002, 4.261015e-002, 4.511447e-002, -4.930948e-002, 2.126578e-002, 5.932315e-002, 1.015469e-002, -1.512095e-002, -4.669117e-003, 4.169585e-003, 3.731457e-002, 5.178963e-002, 1.024708e-003, -2.869277e-002, -4.432961e-002, -2.901894e-002, 1.377996e-002, 6.497857e-002, 7.780591e-002, 7.063244e-002, 6.414991e-002, -3.523050e-003, -1.221624e-002, -4.904985e-002, 9.031644e-002, 9.323580e-002, -3.709824e-002, -4.966072e-002, 5.854445e-002, 3.921196e-002, -2.958936e-002, -2.109398e-002, -2.812460e-002, -7.846007e-002, -2.205241e-002, 1.796236e-002, -8.720563e-003, -7.776131e-005, 2.202638e-002, 6.611516e-002, 1.146658e-001, 1.300954e-001, 9.711901e-002, 6.954844e-002, 3.506104e-002, -2.956492e-002, -3.228770e-002, -4.293485e-002, 7.312131e-002, 1.592126e-002, -6.423042e-002, 7.613796e-003, 4.059027e-002, 2.147615e-002, 2.954392e-002, 5.693515e-002, -6.978502e-003, -9.820757e-002, -1.044101e-003, 4.703708e-002, -9.500235e-003, -1.125713e-002, 9.438599e-003, 4.730350e-002, 8.317923e-002, 7.729166e-002, 4.905288e-002, 2.470703e-002, -1.502873e-003, -4.515390e-002, -2.683957e-002, -2.967551e-002, 1.958183e-002, -1.945441e-002, -4.508722e-002, -6.651706e-003, 4.275686e-003, 2.731643e-002, 1.983465e-002, -1.863279e-003, -3.822219e-002, -6.654648e-002, 5.127402e-002, 6.170353e-002, -2.707856e-002, -2.824871e-002, -2.344251e-002, -9.950763e-003, 1.989963e-002, 8.746685e-003, -6.245006e-003, -1.786128e-002, -2.171087e-002, -4.378608e-002, -1.732215e-003, -2.242256e-002, 7.605132e-003, 1.488591e-002, 9.610676e-003, 3.982349e-002, 9.289478e-002, 2.350936e-002, -3.661486e-002, -3.698350e-002, 1.132955e-002, 5.738880e-003, 3.818106e-002, 2.597602e-002, -5.056017e-002, -3.994488e-002, -1.891070e-002, -2.838871e-002, -3.157652e-002, -5.117200e-002, -4.184389e-002, -3.087947e-002, -2.351163e-002, -2.052389e-002, 2.259700e-002, -2.761469e-002, 3.058928e-002, 4.752439e-002, 1.837407e-002, -7.108687e-003, -5.585120e-003, 2.457586e-002, 2.763041e-002, 3.744626e-002, 5.412900e-002, -2.939897e-005, -1.681977e-002, -5.145486e-003, -1.782222e-002, -1.840723e-002, 1.355480e-002, 6.212826e-003, -4.248541e-002, -6.954868e-002, -4.097027e-002, -2.013876e-002, -2.162181e-003, 1.794732e-002, 5.453057e-002, 2.382279e-003, 2.182328e-002, 1.674122e-002, 5.257868e-003, -3.259480e-002, -7.434834e-002, -6.304293e-002, -4.516302e-002, 6.853767e-003, 4.298463e-002, -2.031736e-002, -4.038060e-002, -2.290243e-002, 8.398914e-004, 1.370185e-002, 4.264521e-002, 4.910582e-002, -1.492017e-002, -4.632752e-002, -2.584923e-002, -4.533866e-003, 2.084657e-002, 4.503600e-002, 4.832430e-002, 2.515925e-002, 1.271613e-002, 1.589380e-002, 5.696828e-002, 6.791549e-002, 2.928523e-002, -1.439461e-002, -3.829868e-002, 6.876429e-003, 6.091120e-002, 2.924815e-002, -8.803881e-003, -2.981191e-002, -2.061092e-002, -1.175184e-003, 3.584142e-002, 4.714243e-002, 1.533142e-002, -2.595267e-003, 5.720954e-003, 1.996208e-002, 3.507345e-002, 3.911848e-002, 5.709579e-003, 5.143987e-003, 7.071255e-003, 9.740853e-003, 4.693196e-002, 5.085999e-002, 2.521460e-002, -2.773508e-003, -2.879555e-002, -4.014205e-002, -1.891598e-002, -5.934194e-003, -1.567409e-002, -2.578975e-002, -4.898698e-002, -4.564319e-002, -1.552654e-002, -3.153426e-003, 9.639416e-003, 1.787695e-002, 3.073900e-002, 3.744660e-002, 3.142675e-002, 1.967694e-002, -3.107482e-002, -1.238169e-002, -6.124455e-002, -6.998726e-002, -2.720402e-002, 1.533719e-004, 1.773284e-002, 1.815466e-002, 2.266203e-002, -7.570589e-005, 6.621297e-004, -4.880433e-004, -1.011948e-002, 5.624671e-003, 2.153052e-002, 2.268662e-002, -1.705205e-002, -4.454780e-002, -1.831888e-002, 1.168053e-002, 3.566319e-002, 3.506394e-002, 1.746694e-002, 2.236819e-002, -1.319965e-002, -7.553159e-003, -1.761228e-002, -6.059121e-003, 1.242163e-002, -1.653106e-005, -1.979987e-002, -1.760299e-002, 6.579258e-003, 1.870278e-002, 3.670315e-002, 1.728214e-002, -1.925587e-002, -5.121616e-002, -3.078541e-002, 8.061188e-003, 1.177741e-002, -3.595150e-002, -3.613774e-002, -2.902104e-003, 2.162047e-002, 1.622881e-002, 1.013921e-003, 2.249659e-002, 3.125637e-002, 2.326088e-002,

© ISO/IEC 2004 — All rights reserved


Copyright International Organization for Standardization
Provided by IHS under license with ISO
No reproduction or networking permitted without license from IHS
Not for Resale

5.761413e-002, 2.160809e-003, -3.024357e-002, -2.059744e-002, -1.012163e-002, -5.959907e-003, -1.103459e-002, -3.721238e-003, 2.129836e-002, 3.555017e-002, 2.006545e-002, -1.429602e-002, -3.406547e-002, -2.632753e-002, -6.272750e-003, -2.042890e-002, -3.415534e-002, -1.260497e-002, 7.517903e-003, -4.924223e-004, -2.316091e-002, 1.139987e-002, 4.253291e-002, 5.060137e-003, 6.805811e-002, 7.492762e-003, -2.384502e-002, -5.322992e-003, 1.892517e-002, 4.880573e-002, 5.044748e-002, 4.575836e-002, 4.284457e-002, 2.317312e-002, -1.153818e-002, -2.707624e-002, -2.345625e-002, -1.657237e-002, -4.631622e-003, 8.371825e-004, -1.635294e-002, -1.568042e-002, -3.126973e-003, -1.434562e-003, -2.505339e-002, -1.786486e-002, -4.364638e-003, -7.538551e-002, 4.028682e-002, -1.416925e-003, -1.577675e-002, -1.099105e-003, 1.551543e-002, 2.706581e-002, 2.076639e-002, 1.446619e-002, 2.891728e-003, -1.638363e-002, -3.065416e-002, -2.648269e-002, -1.694156e-002, -4.621420e-003, 1.357249e-003, 4.722897e-003, -1.345978e-002, -1.124468e-002, -1.201245e-002, 9.509919e-003, -1.754552e-002, -8.686670e-003, -1.706338e-002, -8.263259e-002, 1.607028e-002, -2.322709e-002, -3.014957e-002, -4.489270e-003, 3.019445e-002, 5.088697e-002, 4.652757e-002, 3.368623e-002, 2.226794e-002, 9.295515e-003, 4.887830e-003, 9.393089e-003, 1.581493e-002, 3.674779e-003, -4.960498e-003, 1.051273e-003, -1.833463e-002, -1.101593e-002, -2.618702e-003, 3.778225e-002, 4.463643e-003, 1.824525e-002, 1.847813e-002, -3.036983e-002, 1.755066e-002, -4.683215e-002, -5.853938e-002, -2.590767e-002, 9.988910e-003, 3.181537e-002, 2.367685e-002, -2.971209e-003, -1.889949e-002, -1.460036e-002, 3.449729e-003, 1.544745e-002, 2.207406e-002, 2.710271e-003, -4.852121e-003, 3.368417e-003, -5.623124e-003, -5.448518e-003, 9.954394e-003, 5.413053e-002, 2.747656e-003, 4.200346e-002, 3.607408e-002, 2.430856e-002, 4.022436e-002, -2.922453e-002, -5.668708e-002, -2.691756e-002, 1.397635e-002, 3.825714e-002, 2.033470e-002, -2.089667e-002, -4.272523e-002, -3.278469e-002, -2.951890e-003, 1.460710e-002, 1.218477e-002, -1.710525e-003, 1.092753e-003, 7.351763e-003, 5.693852e-003, -2.266661e-003, 1.830658e-002, 4.416083e-002, -2.144708e-002, 3.131746e-003, -6.998323e-003, 1.070216e-002, 5.167694e-002, -1.112774e-002, -4.097337e-002, -1.909348e-002, 2.093092e-003, 2.769038e-002, 1.578562e-002, -2.557909e-002, -4.776902e-002, -3.431211e-002, -5.748363e-003, 9.493016e-003, 4.357963e-003, 3.849474e-004, 3.736278e-003, 3.360893e-003, 2.012523e-002, 7.965068e-003, 2.785278e-003, 7.121412e-004, -2.538223e-003, -9.962343e-003, -5.647572e-002, -3.114572e-002, 2.759646e-002, -2.271308e-002, -4.113263e-002, -2.293534e-002, -2.219894e-003, 1.728954e-002, 2.539395e-003, -3.219548e-002, -4.257789e-002, -2.636579e-002, -1.344597e-002, 1.461258e-003, 1.490991e-003, -3.977118e-003, -4.386094e-003, 1.450598e-002, 4.132554e-002, 1.335849e-002, -1.988373e-002, -1.619208e-002, 4.702140e-002, 6.298127e-002, 4.116226e-002, 5.555644e-002},
{-1.024340e-001, -3.369735e-002, 8.736396e-002, 1.275402e-001, -5.440826e-002, -7.805423e-002, 3.972689e-002, 3.990533e-002, -3.732126e-002, -1.548694e-001, -1.591979e-002, 1.833221e-002, -2.074620e-002, -3.461232e-002, -9.565568e-003, 1.561634e-002, 3.952311e-002, 9.473542e-002, 9.284687e-002, 1.171925e-001, 9.932779e-002, 4.675017e-002, 6.467545e-006, -5.189411e-003, -1.241571e-001, -3.433151e-002, 8.275164e-002, 8.395674e-002, -9.204453e-002, -5.828759e-002, 4.147995e-003, -4.518911e-003, -2.142010e-002, -1.102944e-001, 1.818685e-002, 9.673090e-002, 1.597420e-002, -5.272798e-002, -9.786279e-002, -1.165530e-001, -8.729875e-002, -2.812509e-002, -7.499787e-003, 1.681469e-002, 2.643963e-002, 1.947152e-002, 3.392683e-002, 2.734471e-002, -5.664078e-002, 1.453552e-002, 8.172533e-002, 3.223812e-002, -4.076379e-002, 3.252183e-003, -2.841830e-003, -1.802063e-002, 5.127471e-003, -5.393793e-003, 7.074864e-003, 1.317635e-001, 7.100839e-002, 2.018634e-002, -2.477093e-002, -5.878108e-002, -5.700946e-002, -3.041486e-002, -2.785451e-002, -2.517224e-002, -3.718126e-002, -1.926353e-002, 3.245721e-002, 3.559522e-002, -1.039410e-002, 3.843303e-002, 7.747558e-002, 2.654671e-002, 3.584391e-002, 4.596974e-002, 1.182638e-002, -1.067198e-002, 1.723555e-002, 9.510063e-002, 2.472015e-002, 3.309240e-002, 5.175130e-002, 3.527884e-002, 9.877255e-003, -5.946047e-003, -8.283432e-003, 1.603968e-003, -6.670481e-004, -2.832021e-002, -7.175040e-002, -3.663826e-002, 1.039012e-002, 6.927746e-003, -2.381864e-002, 9.234210e-003, 2.510878e-002, 3.542151e-002, 7.935930e-002, 6.441591e-002, 1.619851e-002, 5.383979e-003, 2.465390e-002, 1.039567e-001, 1.242524e-001, -1.945162e-002, -8.871287e-002, -5.400859e-002, -3.424793e-002, -3.485240e-002, -3.114546e-002, -1.203109e-002, -7.503417e-003, -2.538984e-002, -6.680938e-002, -4.142208e-002, -1.571806e-002, -3.468149e-002, -5.945998e-002, -1.517302e-002, -2.446410e-003, 1.859324e-003, 2.863156e-002, 2.093785e-002, -1.209291e-002, -2.147477e-002, 4.453192e-003, 1.492737e-002, 3.897597e-002, 7.102843e-002, -4.074521e-002, -1.235947e-001, -1.314549e-001, -1.082243e-001, -6.430925e-002, -1.370508e-002, 2.353716e-002, 1.188802e-002, -3.287589e-002, -2.018901e-002, -2.435935e-002, -3.009275e-002, 2.279807e-002, 4.598235e-002, -7.329260e-004, -9.918239e-002, -8.009963e-002, -5.943094e-002, -7.164319e-002, -5.625050e-002, -1.450022e-002, -6.372154e-002, -1.269663e-001, -3.645552e-002, 8.132142e-002, 5.014492e-002, 5.130739e-003, 7.834044e-003, 3.527408e-002, 6.399035e-002, 6.894775e-002, 4.103522e-002, -2.112240e-002, -1.243921e-003, -2.565760e-002, -1.057604e-002, 4.893412e-002, 7.276653e-002, 2.121330e-002, -2.304679e-002, 2.365578e-002, 9.526216e-003, -1.147823e-002, 2.887905e-002, 5.416358e-002, 6.008422e-002, 9.754901e-003, -5.430055e-002, 6.264259e-002, 1.026753e-001, 5.885806e-002, 3.197076e-002, 3.205339e-002, 3.842459e-002, 4.822485e-002, 2.925882e-002, -2.254345e-002, 4.172517e-003, -2.024920e-002, 4.760926e-003,


© ISO/IEC 2004 — All rights reserved

Copyright International Organization for Standardization
Provided by IHS under license with ISO
No reproduction or networking permitted without license from IHS
Not for Resale

3.952864e-002, 9.639265e-002, 9.097990e-002, 6.132895e-002, -4.385052e-002, -8.060121e-002, 2.851471e-002, 6.853265e-002, -2.448772e-002, -3.008613e-002, 1.331544e-001, 4.140990e-002, 2.682829e-002, 6.288915e-002, 3.588931e-002, -1.102526e-002, -3.009595e-002, -1.380781e-002, 1.152133e-002, 4.753925e-003, -3.003907e-002, 2.232650e-004, -3.009850e-002, -3.172666e-003, 7.079031e-003, 5.680551e-002, 8.035997e-002, 8.106071e-002, 3.809233e-002, -1.677860e-003, -6.447712e-003, -1.358560e-002, 5.515885e-003, 3.163899e-002, 7.624586e-002, -1.503615e-002, -4.659233e-002, -8.089993e-003, 7.239380e-003, -3.438060e-002, -6.914101e-002, -4.857006e-002, -8.291453e-003, -7.261747e-003, -3.326026e-002, -2.618224e-003, -4.009914e-002, -1.799899e-002, -5.968902e-002, -3.694360e-002, -1.295186e-002, 1.229657e-002, 1.979026e-002, 2.996328e-002, 7.493180e-003, -1.946915e-002, 3.319956e-002, 2.657093e-002, -3.946895e-002, -1.189352e-001, -1.050952e-001, -4.823374e-002, -1.895426e-002, -3.319896e-002, -6.206426e-002, -3.309801e-002, -5.571820e-003, -7.525925e-003, -2.842122e-002, 4.854950e-003, -2.414416e-002, 5.123248e-003, -9.121720e-002, -6.429264e-002, -5.082063e-002, -6.022467e-002, -7.505543e-002, -1.470048e-002, 4.667942e-002, 4.310916e-002, 3.741551e-002, -5.162865e-002, -1.175654e-001, -1.279228e-001, -8.917980e-002, -3.912731e-002, -1.723514e-002, -3.380513e-002, -4.697422e-002, -1.191791e-002, -5.944027e-003, -3.724478e-003, -1.787025e-002, 1.582861e-002, 5.713159e-004, 5.036876e-002, -2.320205e-002, 1.072163e-002, 6.308815e-003, -3.519846e-002, -4.951087e-002, -5.164306e-003, 4.491015e-002, 6.254945e-002, 4.405419e-002, -4.081403e-002, -8.904823e-002, -7.317512e-002, -1.731724e-002, 4.052621e-002, 4.278616e-002, -1.689282e-002, -3.087238e-002, 7.676259e-004, 6.945824e-004, 1.222595e-002, -1.071564e-002, 3.158344e-002, 1.144618e-003, 6.242143e-002, 3.058079e-003, 4.391875e-002, 3.893341e-002, 3.959412e-003, -3.379479e-003, 9.236008e-003, 1.369491e-002, 2.558241e-002, 1.208087e-002, -4.642519e-003, -6.123145e-003, 6.830163e-003, 4.587091e-002, 7.578567e-002, 5.431570e-002, 5.717518e-004, -1.613221e-002, 2.492887e-005, 9.735394e-003, 3.447761e-002, -4.823087e-003, 3.612646e-002, -2.295926e-002, 1.072984e-002, -3.844744e-002, 7.449208e-003, 5.208041e-002, 5.360552e-002, 1.756552e-002, -1.764166e-003, -1.079904e-002, -1.443846e-002, -2.411179e-002, 2.157248e-003, 5.744646e-002, 7.678085e-002, 5.257242e-002, -3.059474e-003, -2.235263e-002, -7.463156e-003, -7.997293e-003, -6.401534e-003, 1.475801e-002, 3.669658e-002, 4.797359e-003, 4.632962e-002, -3.039315e-002, -3.831303e-002, -1.614790e-002, 2.379807e-003, 3.687484e-002, 4.074431e-002, 3.151338e-002, 2.121837e-002, 9.088501e-003, -1.194373e-002, -2.445210e-002, -1.822624e-002, 1.513966e-002, 4.479896e-002, 3.029746e-002, -1.969074e-002, -3.132116e-002, 9.360078e-003, -2.606175e-003, -1.842699e-002, 1.999741e-003, 1.313227e-002, 2.475975e-003, 3.355135e-002, 4.991778e-003, -3.921862e-002, 5.084524e-003, -1.256442e-002, -4.078813e-002, -3.102864e-002, -1.743741e-002, -3.792800e-003, 2.779331e-003, -6.790860e-003, 1.035388e-002, 2.032673e-002, 2.767953e-002, 3.557707e-002, 1.416065e-002, 1.888486e-003, 2.100440e-002, 5.196235e-002, 7.849067e-003, -2.744096e-002, -5.210518e-003, 4.963147e-004, -1.462149e-002, 1.272383e-002, 7.239508e-002, -4.457871e-003, 4.131737e-003, 1.955109e-002, 5.739901e-003, -7.840672e-003, -2.726962e-002, -2.706732e-002, -3.655587e-002, -3.289201e-002, -3.513966e-003, 1.061662e-002, 1.226992e-002, 1.222760e-002, 6.141149e-003, 2.912085e-003, 4.063027e-002, 5.206538e-002, 4.214278e-003, -2.672433e-002, -1.791337e-003, -7.616819e-004, -3.944780e-002, -7.026968e-003, 7.627715e-002, 4.846531e-003, -2.146801e-002, -9.437207e-003, -2.825707e-003, -1.844529e-002, -4.709561e-002, -6.102071e-002, -5.785334e-002, -3.774794e-002, -2.469641e-002, -1.317001e-002, -6.097286e-003, -1.047543e-002, -2.452373e-002, -1.064346e-002, 1.863333e-002, 1.780175e-002, -8.728015e-003, -1.523882e-002, 8.720885e-003, -3.823281e-003, -5.809780e-002, 6.917569e-003, 1.155499e-002, -1.515618e-002, -1.474340e-002, -1.826298e-002, -6.353171e-003, -6.125992e-004, -1.079743e-002, -1.379876e-002, -3.259673e-004, 1.147378e-002, 2.258266e-002, 3.474918e-002, 3.253213e-002, 1.758686e-002, 6.655763e-003, 1.044768e-002, 1.281982e-002, 1.223902e-002, 1.317436e-003, 2.320252e-004, 1.627941e-002, 8.447122e-003, -4.257160e-002, -6.507560e-003, -2.599505e-002, -2.474311e-002, 2.869653e-002, -9.290433e-004, -1.763926e-002, -2.069460e-002, -3.505201e-002, -4.054264e-002, -3.749175e-002, -2.449177e-002, -5.650693e-004, 2.120985e-002, 3.139191e-002, 2.483484e-002, 2.588721e-002, 2.226829e-002, 2.024346e-002, 1.941860e-002, 1.032010e-002, -5.069314e-003, 2.125095e-002, 2.869454e-002, -1.300806e-002, -2.405295e-002, 2.451697e-002, 2.296514e-002, 5.889725e-002, 3.707729e-002, 4.439884e-003, -1.567903e-003, -8.713007e-003, -1.357696e-002, -2.108919e-002, -2.793229e-002, -1.311626e-002, 1.106004e-002, 2.230934e-002, 2.382558e-002, 2.375033e-002, 2.364545e-002, 1.802346e-002, 2.769726e-002, 9.576740e-003, -2.020277e-002, 1.177584e-002, 6.918118e-004, -1.442875e-002, -4.139991e-002, 5.325463e-002, 3.475511e-002, 3.062809e-002, 3.876257e-002, 1.489938e-002, 1.702695e-002, 2.536353e-002, 2.284489e-002, 1.091760e-002, -4.540778e-003, -8.857344e-003, 1.247243e-003, 7.573827e-003, 1.224621e-002, 1.213582e-002, 2.979531e-002, 2.801684e-002, 2.267444e-002, -4.225868e-003, -2.646213e-003, 1.035541e-002, -3.386229e-002, 1.486133e-002, -4.696404e-002, 1.338784e-002, -2.172252e-002, -3.692495e-002, -1.165727e-002, -4.669165e-003, 3.876831e-003, 1.727298e-002, 1.975512e-002, -2.177063e-003, -2.384424e-002, -3.064575e-002, -2.282002e-002, -1.377952e-002, 2.007842e-003, 1.631392e-002, 4.501940e-002, 3.964021e-002, 1.806964e-002, 1.827807e-003, 2.355294e-002, 1.159886e-002, -3.878702e-002, 3.521518e-002, -2.164728e-002, 1.314539e-002, -3.762661e-002},

© ISO/IEC 2004 — All rights reserved


Copyright International Organization for Standardization
Provided by IHS under license with ISO
No reproduction or networking permitted without license from IHS
Not for Resale

{-1.689857e-001, -6.962012e-002, 9.376044e-002, 1.185047e-001, -9.186353e-002, -1.469177e-001, -6.067692e-002, -3.353390e-002, -7.220615e-002, -1.008959e-001, -2.333298e-002, 4.013115e-002, -4.758433e-002, -1.138934e-001, -5.532528e-002, 1.216580e-002, 2.092990e-002, 7.054933e-002, 9.459394e-002, 1.097645e-001, 7.637720e-002, 1.646819e-002, -5.547906e-002, -3.754657e-002, 6.483797e-003, 7.679495e-002, 1.605909e-001, 1.165168e-001, -5.132693e-002, -5.374169e-002, 2.205831e-002, 3.528777e-002, -1.890056e-002, -8.065540e-002, -1.731132e-002, 7.297624e-002, 4.869626e-002, 2.604343e-002, 4.146065e-002, 6.208699e-002, 6.460550e-002, 4.376822e-002, -8.790116e-003, -3.159885e-002, -2.523287e-002, -1.928429e-002, -3.687484e-002, -2.997086e-002, -3.497045e-002, 4.370526e-003, 5.745256e-002, 4.680083e-002, 1.210662e-002, 4.656218e-002, 6.631921e-002, 5.965895e-002, 1.109627e-002, -4.694011e-002, -7.071951e-004, 2.674560e-002, 9.870943e-004, -2.423067e-003, 2.546983e-002, 3.792766e-002, 3.078896e-002, -3.851180e-003, -6.674901e-002, -9.217911e-002, -4.733118e-002, -7.805778e-003, -3.466017e-003, -1.281249e-002, -1.297702e-001, -9.677793e-002, -2.136491e-002, 2.637804e-002, 5.573666e-002, 6.162502e-002, 5.444530e-002, 3.653840e-002, 1.203104e-002, -4.118483e-002, -1.184053e-003, 4.722311e-002, -1.903850e-002, -5.991775e-002, -6.377009e-002, -5.169279e-002, -3.961035e-002, -4.219834e-002, -5.602056e-002, -4.645532e-002, -9.684591e-003, 3.606886e-002, 3.412968e-002, -2.916281e-003, -1.315676e-001, -8.905851e-002, 2.647642e-003, 3.424590e-002, 2.612275e-002, 1.616356e-002, 2.677062e-002, 1.854094e-002, 1.536444e-002, -2.749389e-002, -2.586232e-002, 4.959553e-002, 6.053678e-002, 7.229850e-003, -2.044101e-002, -1.669949e-002, 4.786692e-003, 3.468116e-002, 4.599989e-002, 2.328587e-002, 1.914813e-002, 5.300666e-002, 5.860413e-002, 1.362295e-002, -8.067798e-002, -3.848931e-002, -2.599937e-003, -3.884966e-002, -1.956172e-002, -3.882976e-003, 1.230547e-002, 5.891172e-003, 3.052654e-002, 1.989154e-002, -1.954735e-002, 3.629549e-002, 4.243433e-002, 3.622411e-002, 3.539451e-002, 4.956148e-002, 6.048728e-002, 7.213500e-002, 6.275699e-002, 2.876348e-002, 1.534975e-002, 4.299963e-002, 7.711777e-002, 3.731603e-002, -1.921039e-002, 3.373773e-002, 1.069117e-004, -4.025293e-002, 4.580067e-002, 5.316724e-003, -2.104865e-002, -3.827249e-002, 3.261844e-002, 9.595007e-002, 8.599523e-003, 4.535603e-002, 2.726231e-002, -1.296271e-002, -3.268170e-002, -1.495154e-002, 1.261043e-002, 3.492770e-002, 3.600332e-002, 1.656947e-002, -3.795117e-003, 2.426864e-002, 5.169302e-002, 2.604621e-002, 6.463863e-002, 8.182530e-002, 1.879789e-002, 5.143200e-002, 3.510792e-002, -7.586915e-002, -2.446354e-002, -4.810023e-002, -3.056123e-002, 6.544162e-002, -6.100032e-003, 2.529527e-002, 7.458796e-002, 8.942344e-003, -2.380067e-002, -2.148637e-002, -1.702477e-003, 2.436706e-002, 1.648249e-002, -1.507800e-002, -3.864478e-002, -2.029153e-002, 7.658083e-003, -3.341021e-004, 8.099008e-002, 5.264439e-002, 2.766979e-003, 4.256909e-002, -8.002563e-003, -1.038671e-002, 6.513193e-002, -6.789437e-003, -5.011502e-002, 3.534201e-002, -9.893119e-003, -2.161064e-002, 3.871404e-002, -7.499097e-003, -4.567544e-002, -4.868089e-002, -3.481121e-002, -9.839342e-003, -1.723021e-002, -3.716818e-002, -5.995388e-002, -5.002791e-002, -2.577767e-002, -7.802554e-003, 5.487247e-002, 2.003086e-004, -8.010249e-002, -6.933504e-002, -2.145609e-002, 1.174935e-002, -2.968906e-002, -1.029398e-001, -7.915469e-002, 3.251087e-002, -2.819017e-002, -7.073375e-002, -1.143973e-002, -3.647673e-002, -7.400427e-002, -7.835734e-002, -6.060647e-002, -2.968341e-002, -3.331806e-002, -4.477852e-002, -7.303212e-002, -5.880472e-002, -1.141935e-002, 1.023605e-002, 5.503848e-002, 2.521004e-004, -7.078538e-002, -7.937192e-002, -1.516194e-002, 3.116912e-002, 3.818714e-003, -1.965921e-002, 1.162982e-002, -1.406373e-002, -1.058445e-001, -1.222321e-001, -3.405539e-002, -2.084677e-002, -6.434382e-002, -7.598025e-002, -4.951923e-002, -1.707488e-002, -2.059386e-002, -3.176235e-002, -5.262823e-002, -3.701476e-002, 7.036882e-003, 3.429933e-002, 8.691003e-002, 2.937741e-002, -3.546057e-002, -5.522772e-002, -2.030721e-002, 4.351201e-002, 6.166994e-002, 6.643442e-002, 7.632855e-002, 2.549812e-002, -5.582816e-002, -7.884769e-002, -2.568138e-002, 2.393017e-002, -1.164870e-002, -3.573861e-002, -1.489220e-002, 8.535703e-003, 8.120511e-003, -9.539673e-003, -2.184918e-002, -2.657270e-002, -1.529899e-004, 2.591714e-002, 8.943451e-002, 4.213335e-003, -4.214674e-002, -3.578262e-002, 1.269888e-003, 2.963353e-002, 3.820855e-002, 5.462035e-002, 7.352616e-002, 5.303936e-002, 4.613055e-003, -7.089395e-003, 2.068210e-002, 6.893687e-002, 5.435569e-002, 1.083720e-002, 2.274772e-002, 4.191184e-002, 4.443345e-002, 2.219899e-002, 1.108794e-002, -3.113986e-002, -2.478189e-002, 1.872023e-003, 1.698262e-002, -5.471657e-002, -1.992124e-002, 4.702288e-002, 5.426820e-002, 1.210485e-002, -2.749705e-002, -4.058058e-002, -3.426510e-002, 3.635444e-003, -5.983374e-003, -2.137672e-002, -1.387099e-002, 1.197212e-002, 2.439732e-002, 7.426770e-003, 2.428585e-002, 5.477546e-002, 6.630542e-002, 5.443789e-002, 3.124366e-002, -2.139724e-002, -3.223496e-002, 4.162603e-003, -7.718489e-002, -7.507687e-002, 5.134885e-002, 9.166082e-002, 3.203519e-002, -2.624204e-002, -5.040270e-002, -5.725046e-002, -5.216520e-002, 2.675006e-002, 8.079277e-002, 6.927008e-002, -5.641662e-003, -6.352671e-002, -5.853929e-002, -2.748486e-002, 4.621737e-003, 4.581791e-002, 6.030285e-002, 6.460411e-002, 4.126603e-002, -1.186936e-002, -2.637049e-002, 4.769170e-003, -8.956701e-002, -6.022477e-002, 3.388476e-002, 3.922063e-002, -8.686039e-003, -4.863133e-002, -6.169669e-002, -4.584313e-002, -2.258546e-002, 1.868721e-002, 3.199796e-002, 4.995391e-002, 4.304329e-002, 1.677853e-002, -8.797549e-004, 5.533584e-003, 1.652166e-002, 3.017175e-002, 2.927090e-002, 3.552409e-002, 3.237080e-002, -4.217430e-003, -1.153613e-002, 1.685339e-003, -


© ISO/IEC 2004 — All rights reserved

Copyright International Organization for Standardization
Provided by IHS under license with ISO
No reproduction or networking permitted without license from IHS
Not for Resale

1.700212e-002, -1.115228e-002, 1.856469e-002, 3.654943e-002, 2.192038e-002, -1.554749e-002, -3.192172e-002, -2.799144e-002, -1.478729e-002, -4.507874e-004, -4.085282e-003, -2.238658e-002, -3.281101e-002, -8.461865e-003, 8.196104e-003, 3.060968e-002, 2.981032e-002, 1.129500e-002, -1.049262e-002, 1.207927e-002, 1.907816e-002, 2.498692e-002, 3.188098e-002, 6.643866e-003, 3.289803e-002, 9.244839e-004, -1.905522e-002, -1.496724e-002, -8.878817e-003, 1.809181e-004, -3.222727e-003, -1.126113e-002, -6.630053e-003, 1.835186e-002, 2.240113e-002, 1.693702e-002, 1.353692e-002, 2.698737e-003, -1.197024e-002, 7.956808e-003, 1.817142e-002, -1.889150e-002, -2.934045e-002, 1.786498e-003, 9.038068e-003, 4.294977e-002, 5.489460e-002, 6.795357e-003, 3.201213e-002, 1.236576e-002, -1.707527e-004, 4.328679e-003, 5.507963e-003, -2.819486e-003, -1.306306e-002, -1.502893e-002, -1.094502e-002, -1.730435e-003, -2.982470e-003, -3.467573e-003, 1.420338e-003, 4.321105e-004, -1.648413e-002, -2.173147e-002, -7.259943e-003, -3.039661e-002, -2.131344e-002, 7.986191e-003, -2.494396e-003, 1.644996e-002, 2.357340e-003, -2.628114e-003, 2.496486e-002, -7.710314e-005, -9.313222e-003, 1.004835e-002, 3.829979e-002, 5.099328e-002, 5.561314e-002, 5.304195e-002, 4.087939e-002, 2.156443e-002, -1.817848e-003, -1.717904e-002, -2.629993e-002, -3.239437e-002, -3.561893e-002, -2.854328e-002, -1.015530e-002, -1.303757e-002, -9.291989e-004, 1.300888e-002, -1.416784e-002, -3.388342e-002, -4.904968e-002, -1.253056e-002, 5.117856e-003, -2.298751e-002, -5.420623e-002, -3.989634e-002, -2.606376e-003, 3.559490e-002, 4.845768e-002, 4.593545e-002, 3.588624e-002, 1.697193e-002, -2.401169e-003, -2.139819e-002, -3.810912e-002, -4.651781e-002, -2.608720e-002, 3.293864e-003, 2.658375e-002, 1.366310e-002, 2.499803e-002, 2.960518e-002, -4.071934e-003, -1.589065e-002, -3.436102e-002, 3.960134e-003, -9.520159e-003, -1.327413e-002, -4.141668e-002, -5.274715e-002, -2.542613e-002, 1.017367e-002, 2.801606e-002, 2.558260e-002, 1.989138e-002, 1.594203e-002, 8.377014e-003, -1.211107e-002, -3.392132e-002, -3.563552e-002, -6.660920e-003, 2.627588e-002, 3.252107e-002, -7.882943e-003, 2.177283e-002, 2.561225e-002, -1.902597e-002, -6.562065e-003, 1.734812e-003, -3.703867e-003, -1.623349e-002, 1.798339e-002, 1.976889e-002, -1.790288e-002, -1.896536e-002, 2.533334e-003, 2.424001e-002, 2.353362e-002, 2.958158e-002, 2.928278e-002, 2.941208e-002, 8.115299e-003, -2.402332e-002, -2.082938e-002, 4.431157e-003, 1.397507e-002, -1.328884e-002, -4.217537e-002, 6.249106e-003, -1.213151e-002, -1.467280e-002, 1.791171e-002, 2.189413e-002, -5.207826e-003, -3.212326e-002, 2.208392e-002, 4.626879e-002, 2.716389e-002, 7.180745e-003, 3.950957e-003, 1.362237e-002, 2.020712e-002, 2.458793e-002, 2.613879e-002, 2.277791e-002, -4.599153e-003, -2.281747e-002, -1.770629e-002, -1.387697e-002, -3.351614e-002, -7.117701e-002, -7.018561e-002, -9.262596e-003, -1.565859e-002, -1.124180e-002, 2.726960e-002, 4.267085e-003, 3.780247e-003},
{-2.183075e-002, -7.785194e-002, -9.703311e-002, -7.963288e-003, 1.599950e-001, 1.764666e-002, 1.568847e-002, 3.812270e-002, 1.998099e-002, 4.505372e-002, 9.961647e-002, 4.400674e-003, -4.808399e-002, -3.033568e-002, -2.759355e-002, -2.541124e-002, -3.555996e-003, -3.993732e-002, -9.294099e-002, -7.099902e-002, -4.376662e-002, -4.949306e-002, -4.347732e-002, -7.848256e-002, 3.553908e-002, -2.563143e-002, -5.535653e-002, 1.774285e-002, 9.780784e-002, -5.549409e-002, -6.533601e-003, 7.137328e-003, -1.051621e-002, 8.461264e-003, 1.121511e-001, 3.689955e-002, -3.081315e-002, 1.522285e-002, 9.835469e-002, 1.690633e-001, 2.060458e-001, 1.540665e-001, 2.165352e-002, -5.106735e-002, -3.374117e-002, -2.278396e-002, 3.495180e-003, -4.267646e-002, -3.318882e-002, -5.335199e-002, -5.024865e-002, 2.813439e-002, -1.047680e-002, -9.166178e-002, -3.429713e-002, -2.247942e-002, -5.206124e-002, -3.782517e-002, 6.030113e-002, 5.512365e-002, -6.619428e-002, -1.164053e-001, -6.866143e-002, 1.109844e-002, 7.768787e-002, 7.912307e-002, 1.489436e-002, -3.153884e-002, -3.465404e-002, 2.544514e-002, 3.847269e-002, 4.434842e-003, -2.236826e-002, 1.661408e-003, 3.760293e-002, 4.178265e-002, -6.225285e-002, -6.622176e-002, -1.488841e-002, 6.602292e-003, -5.066454e-002, -5.904052e-002, -2.514391e-002, 4.162886e-002, -2.331158e-003, -9.657810e-002, -1.300129e-001, -9.951632e-002, -3.846498e-002, 2.475736e-003, -7.619170e-003, -2.577327e-002, -1.707892e-002, 5.963286e-002, 3.722217e-002, 1.714658e-002, 9.063066e-002, 1.123358e-001, 6.050154e-002, -1.725147e-002, -2.683951e-002, -1.084661e-003, 6.498166e-002, 6.223415e-002, 5.427187e-003, -2.839041e-002, -6.493938e-002, -4.849737e-002, 9.343438e-003, -1.793467e-003, -5.250244e-002, -6.193143e-002, -3.920799e-002, -1.113780e-002, -1.251877e-002, -8.493669e-003, 1.832563e-002, 6.425775e-002, 2.795912e-002, -7.461818e-003, 1.222206e-001, 4.934718e-002, -4.915438e-002, -1.861212e-002, -1.104060e-002, 2.890185e-002, 1.055707e-001, 9.113879e-002, 3.183947e-002, -9.605605e-003, -3.619681e-002, -1.001430e-001, -5.014719e-002, 1.640235e-002, 1.593785e-002, 2.554972e-004, 2.702457e-003, 1.093550e-002, 4.274214e-003, 1.739222e-002, 2.147868e-002, 5.951476e-002, 1.969588e-002, -1.761528e-002, 1.884363e-002, -5.773221e-002, -5.475054e-002, -6.077221e-003, -1.000680e-001, -6.122619e-003, 7.525966e-002, 5.174499e-002, -2.091169e-002, -7.175728e-002, -2.674666e-002, -4.474421e-002, -4.933995e-002, 1.144996e-003, 3.107302e-002, 3.232792e-002, 2.633249e-002, 9.340660e-003, -7.510933e-003, -4.066341e-003, 6.722487e-003, 4.351805e-002, 1.997207e-002, -1.681511e-002, -2.573849e-002, -6.508476e-004, 7.172736e-002, 4.930724e-002, 6.379778e-003, 3.831579e-002, 6.250536e-004, -6.574550e-003, 9.849464e-003, -1.652074e-002, 5.132662e-002, 8.091476e-002, 3.630739e-002, -1.269639e-002, -1.911475e-002, -1.516877e-002, -2.858465e-002, -5.506916e-002, -5.554614e-002, -1.853603e-002, 7.689780e-003, 3.489464e-002, 2.923423e-002, 1.596759e-002,

© ISO/IEC 2004 — All rights reserved


Copyright International Organization for Standardization
Provided by IHS under license with ISO
No reproduction or networking permitted without license from IHS
Not for Resale

4.237479e-002, 9.597314e-002, 8.486300e-002, 6.248547e-002, 1.878333e-002, -7.647031e-002, -1.175280e-001, -5.819744e-002, 3.960706e-004, -1.636417e-002, 5.068742e-002, 9.702625e-002, 6.220851e-002, 2.208424e-003, -2.816891e-002, -2.792872e-002, -4.016154e-002, -6.484675e-002, -4.676315e-002, 5.657658e-006, 1.483118e-002, 3.483990e-002, 4.297870e-002, 4.179520e-002, 9.571115e-002, 4.741129e-002, -4.396181e-002, -2.482756e-002, 1.577291e-002, -1.849220e-002, -2.330604e-002, 2.233629e-002, -1.298769e-003, -1.999544e-002, 2.374847e-002, 2.119330e-002, -1.661550e-002, -1.267926e-002, -1.969641e-003, -8.228333e-004, -6.411690e-003, -1.744624e-002, -1.004559e-003, 3.034567e-002, 2.854080e-002, 2.525164e-002, 2.738256e-002, 4.481285e-002, 4.384255e-002, -5.866355e-002, -9.911621e-002, -3.382175e-002, 2.584364e-002, -1.433527e-002, 9.726107e-003, 5.241616e-002, 1.671478e-003, -1.365506e-002, 3.629160e-003, -2.403667e-002, -1.006566e-001, -8.666387e-002, -8.058497e-003, 3.213680e-002, 2.614282e-002, 1.948961e-002, 4.021835e-002, 4.810071e-002, 2.643551e-002, -6.770598e-003, -2.149534e-002, 2.708194e-003, -1.159850e-002, -7.203103e-002, -3.914073e-002, 2.245261e-002, 4.154680e-002, 4.273589e-003, 9.635094e-003, 6.387163e-003, -3.952555e-002, -2.057601e-003, 2.938946e-002, -9.860182e-003, -1.012382e-001, -1.157931e-001, -4.648376e-002, 3.409103e-002, 4.337136e-002, 3.856738e-002, 5.769407e-002, 3.917412e-002, 1.054290e-002, -3.601403e-002, -5.017420e-002, -4.183844e-002, 7.530357e-003, -6.849560e-003, 7.569061e-003, 3.058736e-002, 2.318350e-002, 2.313401e-002, 2.492295e-002, 7.876604e-003, -7.600959e-003, 2.360508e-002, 5.114070e-002, 3.573800e-002, -1.688825e-002, -5.183834e-002, -2.527583e-002, 3.114896e-002, 4.730333e-002, 3.456337e-002, 3.802926e-002, 2.164731e-003, -1.737666e-003, -3.784691e-002, -2.281719e-002, -3.675182e-002, 2.789958e-002, -2.187749e-002, -6.405719e-002, -5.105766e-002, -6.715925e-003, 5.757502e-003, 1.220965e-003, 1.141011e-002, 3.183282e-002, 2.164876e-002, -4.979768e-004, -1.491682e-002, 6.013042e-003, 3.101499e-002, 5.980890e-002, 4.651420e-002, 2.505181e-002, 9.607227e-005, -7.353398e-003, -2.998180e-002, 6.488551e-003, -3.108450e-002, 1.916087e-002, -2.218438e-002, 3.067894e-002, -2.080491e-002, -3.695546e-002, -1.329944e-003, 2.356545e-002, 9.788539e-003, -8.861007e-003, -1.112617e-002, 3.115182e-002, 4.382699e-002, 3.505578e-002, -5.078488e-003, 2.502316e-003, 4.271424e-002, 5.922690e-002, 3.011325e-002, -1.253627e-002, -3.973327e-002, -4.649263e-002, -3.307067e-002, 1.199669e-002, -2.792738e-002, 2.583294e-002, -1.640038e-002, -9.001380e-003, -1.318342e-002, -8.947252e-003, 3.615018e-003, -9.429327e-003, -2.871801e-002, -1.957197e-002, -2.466699e-003, 7.728665e-003, 2.129458e-002, 4.439528e-002, 4.306588e-002, 6.075182e-003, -1.831836e-002, -3.714943e-002, -3.658465e-002, -4.901860e-002, -6.113745e-002, -5.329039e-002, -2.477339e-002, 4.884774e-003, -5.684636e-002, 1.096831e-002, -3.337250e-002, -3.352685e-002, 5.510765e-003, 1.918340e-002, -6.541180e-004, -3.178838e-002, -3.013906e-002, -1.080077e-002, 1.025156e-002, 1.339992e-002, 2.137149e-002, 2.194653e-002, 1.784427e-002, 1.189087e-002, 1.002806e-002, -9.086736e-003, -3.339317e-002, -5.229099e-002, -4.166821e-002, -3.205481e-002, -2.026150e-002, -1.387923e-002, -6.426727e-002, -2.239908e-002, -2.133608e-002, -2.881700e-002, 1.948092e-002, 2.927630e-002, 1.627925e-002, -1.954777e-002, -3.688835e-002, -3.513318e-002, -1.430557e-002, -3.770481e-003, 1.995848e-002, 4.215848e-002, 2.992863e-002, -1.275839e-002, -4.961893e-004, 3.320510e-002, 1.966650e-002, -5.804865e-003, 3.044612e-003, -6.167283e-003, 8.481786e-004, -1.435361e-002, -2.145184e-002, -5.052269e-002, 2.483272e-002, -2.317489e-002, -9.933985e-003, -4.794274e-004, -2.010192e-004, -2.161976e-002, -3.795581e-002, -4.309124e-002, -4.023762e-002, -2.080704e-002, 5.933152e-003, 2.014214e-002, 1.849204e-002, -1.719925e-002, -1.120878e-002, 3.017598e-002, 4.166665e-002, 2.771297e-002, 2.002364e-002, 8.317325e-003, 6.902508e-003, 3.268925e-002, 3.483023e-002, -2.747204e-002, 7.256089e-002, -7.926450e-003, -2.309508e-003, 2.414868e-004, -1.267304e-003, -7.215433e-003, -4.482016e-003, -5.570288e-003, -7.782627e-003, 5.290911e-003, 1.994157e-002, 2.529568e-002, 1.457174e-002, -3.211128e-003, 1.793599e-003, 1.837344e-002, 2.686056e-002, 2.791320e-002, 7.718975e-003, 7.073286e-003, -5.835697e-003, 5.754710e-002, 5.146680e-002, -9.335986e-003, 7.276027e-002, -1.890555e-002, -1.029277e-002, 8.659895e-004, -7.631226e-003, -2.313970e-002, -3.015297e-002, -2.574975e-002, -8.565555e-003, 1.089560e-002, 2.053917e-002, 2.522197e-002, 1.063223e-002, 9.809342e-003, 6.851570e-003, -1.611729e-002, -1.260906e-002, -1.852930e-002, -3.331416e-002, -6.011752e-003, -4.297453e-002, 1.972066e-002, -8.779256e-003, -3.679796e-002, 1.786010e-003, -1.673540e-002, -1.247079e-002, 1.758416e-002, 1.869916e-002, 1.072859e-002, 8.823137e-003, 1.380626e-002, 3.434628e-002, 4.188646e-002, 2.951613e-002, 1.851844e-002, 1.243421e-002, 1.917367e-002, 8.160168e-003, -1.700058e-002, -2.768701e-002, -5.146459e-002, -3.025856e-002, 8.783289e-003, -4.201959e-002, 4.567453e-003, -3.153052e-002, -2.813502e-002, -3.047495e-002, 4.092716e-002, -5.453812e-003, 3.481271e-003, 2.694732e-002, 2.973238e-002, 2.796349e-002, 3.248525e-002, 3.869177e-002, 2.237667e-002, -1.185228e-002, -2.851266e-002, -1.535580e-002, 8.208621e-003, 9.639350e-003, 2.201642e-002, 1.842687e-002, -2.112728e-002, -1.047115e-002, 4.005929e-002, -1.013417e-002, 3.065297e-002, -8.244254e-003, 3.503464e-002, 7.483455e-003, 9.243225e-002, 2.616408e-002, -6.581167e-003, -1.178574e-002, -1.191601e-002, -1.020912e-002, -1.866537e-002, -3.467021e-002, -6.437619e-002, -1.007392e-001, -1.077907e-001, -6.394785e-002, -8.937609e-003, 3.050005e-002, 7.740021e-002, 7.108606e-002, 1.675637e-002, -5.938337e-003, 2.697844e-002, -2.758861e-002, 3.339267e-002, 4.768232e-003, 3.936723e-002, 3.498682e-002},


© ISO/IEC 2004 — All rights reserved

Copyright International Organization for Standardization
Provided by IHS under license with ISO
No reproduction or networking permitted without license from IHS
Not for Resale

{5.761192e-002, -2.602066e-002, -2.916525e-002, 2.026546e-002, -1.547920e-002, -7.829004e-002, -7.703512e-002, -5.818815e-002, -8.652616e-003, 5.706179e-002, -4.624135e-002, -7.204944e-002, -5.299157e-002, -5.121009e-002, 2.394791e-002, 2.618613e-002, -1.781970e-002, -5.031616e-003, -9.999046e-003, -4.521151e-002, 1.024121e-002, 7.506481e-002, 9.838856e-002, 8.097199e-002, -5.714980e-002, -8.727375e-002, -2.532369e-002, 8.795756e-002, 6.211413e-002, 5.437827e-002, -1.177484e-002, -1.191005e-002, -4.031307e-003, 8.052932e-002, 4.326871e-002, -3.793694e-002, -4.343062e-002, -1.747605e-002, 1.557771e-002, 4.780259e-002, 6.509700e-002, 8.013090e-002, 5.316186e-002, -1.815228e-002, -3.372900e-003, 2.080678e-002, 9.715460e-003, 3.118122e-003, -1.171889e-001, -7.717338e-002, 5.514014e-002, 1.109242e-001, 9.923419e-002, 8.496369e-002, -5.484283e-003, 1.492064e-002, 1.425476e-002, 3.498429e-002, 1.057410e-001, 4.738596e-002, 1.906897e-004, -1.257218e-002, -1.408467e-003, 2.812741e-002, 5.743698e-002, 7.733090e-002, 6.284858e-002, -7.457949e-003, -3.354459e-002, -6.792794e-003, -4.793339e-002, -4.748725e-002, -4.814613e-002, 1.223726e-002, 5.132499e-002, 5.596088e-003, 6.330462e-002, 1.405289e-002, -3.701449e-002, 3.948075e-003, 2.840331e-002, -2.671315e-002, 4.087673e-002, 8.259688e-002, 7.462892e-002, 3.476266e-002, 9.905177e-003, 8.996519e-003, 3.129168e-002, 4.733640e-002, 4.165145e-002, -2.177268e-002, -4.050517e-002, -1.676469e-002, -5.322064e-002, -3.139374e-002, 2.867189e-003, -2.531987e-002, -1.031695e-001, -1.005675e-001, -2.130228e-002, -5.321783e-002, -5.434714e-002, -1.947539e-003, 4.045048e-002, -2.660280e-002, -8.912984e-002, -9.007489e-003, 5.808443e-002, 7.098411e-002, 4.798595e-002, 2.231763e-002, 9.685044e-003, -3.298597e-003, -2.591866e-002, -6.392823e-002, -4.174652e-002, -1.151709e-002, -3.438718e-002, 1.585519e-002, -7.490109e-002, -1.124695e-001, -1.282130e-001, -8.986710e-002, -3.580436e-002, -3.996248e-002, -3.510641e-002, 6.386055e-003, 5.477187e-002, 4.664252e-002, -9.600867e-002, -1.444273e-001, -5.552118e-002, 7.021251e-003, -8.814589e-004, -3.815780e-002, -7.376543e-002, -9.969345e-002, -9.010961e-002, -6.458946e-002, -2.256656e-002, 5.447829e-003, -1.535523e-002, 3.242204e-002, -3.307585e-002, -1.176857e-003, -1.289214e-002, -4.219548e-002, 3.414392e-003, 4.759186e-003, 2.332878e-002, 4.934256e-002, 3.142198e-002, 5.835115e-002, -3.294549e-002, -1.151142e-001, -9.240930e-002, -3.133663e-002, -2.381390e-002, -4.950077e-002, -7.420345e-002, -6.453358e-002, -2.535600e-002, -3.676801e-003, 8.908066e-003, 2.571395e-002, -1.459685e-002, 1.880501e-002, 1.124909e-001, 1.073554e-001, 6.157822e-002, 2.787758e-004, -6.755324e-002, -2.554627e-002, 8.474161e-002, 1.004894e-001, -4.682722e-002, -8.578357e-002, -4.647819e-002, -3.615359e-002, 2.692386e-002, 3.853946e-002, 4.511687e-002, 4.394027e-002, 3.751200e-002, 4.626183e-002, 4.858246e-002, 3.509873e-002, 2.563300e-002, 2.072445e-002, -2.589309e-002, -1.976155e-002, 8.833404e-002, 2.373899e-002, 3.485515e-002, 6.616039e-002, 9.084659e-002, 7.359873e-002, 3.795361e-002, -1.125407e-002, -9.197854e-002, -1.193650e-002, 7.420958e-002, 4.978586e-002, 9.277001e-002, 6.388531e-002, 4.715722e-002, 6.397422e-002, 7.808595e-002, 8.283641e-002, 6.584795e-002, 3.598511e-002, 1.963448e-002, -5.451499e-003, -4.108077e-002, -5.275584e-002, -2.400900e-002, -7.984816e-002, -2.074803e-002, 4.542420e-003, 5.926948e-002, 1.465507e-002, -6.562744e-002, -8.568643e-002, -1.098377e-001, -4.297044e-002, 2.156100e-003, -1.459461e-002, 3.223870e-002, 4.059841e-002, -7.897913e-003, -7.325351e-003, 3.356503e-002, 4.789062e-002, 3.530220e-002, 1.753065e-002, 1.552002e-003, -3.063242e-002, -1.853131e-002, -2.775454e-003, -5.459057e-002, -3.485847e-002, -1.765514e-002, -3.819123e-002, -3.732141e-002, -1.875679e-002, 2.634540e-002, 4.299563e-002, -2.361549e-003, 9.379793e-004, -2.378606e-002, -6.031340e-002, -6.717514e-002, -2.025401e-002, -3.000215e-002, -6.365133e-002, -3.377663e-002, -3.123243e-003, -3.605740e-004, 3.284223e-003, -2.420880e-003, -1.813718e-002, 4.410458e-002, 2.843040e-002, 3.400438e-002, 6.183263e-002, 3.054768e-002, -1.967679e-002, -5.241749e-002, -6.412906e-002, -2.865770e-002, -1.357925e-002, -1.772267e-002, 4.258359e-002, 5.130690e-002, -4.351867e-003, -6.137162e-002, -4.994252e-002, -2.294627e-002, -4.871819e-002, -5.398600e-002, -3.625817e-002, -1.440614e-002, 3.104445e-004, -2.955366e-003, -4.908433e-003, 6.053944e-002, 8.876394e-003, 1.254452e-001, 1.060858e-001, 3.764648e-002, 1.515596e-002, 3.650128e-003, -2.250526e-002, -3.631172e-002, -2.886087e-002, -1.128441e-002, 6.024894e-002, 9.563562e-002, 6.292889e-002, 1.779407e-004, -2.713000e-002, -7.247876e-003, 1.346087e-003, -3.371220e-002, -3.804072e-002, -1.388766e-002, -1.006573e-003, -2.649840e-003, -8.056734e-003, 2.198870e-002, -2.440815e-002, 1.015858e-001, 2.760217e-002, -1.554119e-002, 2.962484e-002, 5.201257e-002, 2.346523e-002, -1.675597e-002, -1.619864e-002, -1.656822e-002, -3.025133e-003, 2.641316e-002, 1.912150e-002, -2.866872e-002, -5.219679e-002, -1.729102e-002, 2.483305e-002, -1.318474e-003, -1.903122e-002, -6.532814e-003, -5.448715e-003, 1.457846e-003, -5.538647e-003, 9.734022e-003, 1.434145e-003, 2.829946e-002, -2.617850e-002, -2.569634e-002, -3.552736e-003, 1.046173e-002, 1.825944e-002, 6.953867e-003, 5.042963e-003, 7.419494e-003, -5.108069e-003, -1.765006e-002, -3.522259e-002, -4.111421e-002, -1.164098e-002, 2.127748e-002, 3.043409e-002, 1.914752e-002, 3.432197e-003, 5.542763e-003, 2.285714e-003, 1.534901e-002, -6.434860e-003, 9.382382e-003, 2.921872e-002, 1.969168e-002, -6.692532e-003, -2.226878e-002, -3.433095e-002, -2.497656e-002, 7.403457e-003, 5.704283e-002, 6.925475e-002, 5.445905e-002, 3.691721e-003, -6.160075e-002, -1.085405e-001, -7.467448e-002, 2.287078e-002, 3.005764e-002, -7.800695e-003, -1.376828e-004, 1.833041e-002, 2.054966e-002, 1.140581e-002, 2.638231e-002, 2.530902e-003, -9.305067e-003, 1.405261e-002, -

© ISO/IEC 2004 — All rights reserved


Copyright International Organization for Standardization
Provided by IHS under license with ISO
No reproduction or networking permitted without license from IHS
Not for Resale

1.068815e-002, 2.102983e-003, -2.020371e-002, -4.661506e-002, -3.197547e-002, 8.813552e-003, 4.981160e-002, 5.963909e-002, 2.811728e-002, -2.121257e-002, -5.040874e-002, -4.317108e-002, 1.355748e-002, 5.513742e-002, 1.180822e-002, -5.199292e-002, -2.694133e-002, 1.212926e-002, 1.954845e-002, 1.067858e-002, 2.506279e-002, 1.817959e-002, -2.022384e-002, -2.069555e-002, -6.226883e-002, -4.812031e-002, -2.592614e-002, -9.796859e-003, -7.436256e-003, -2.847456e-005, 1.881872e-002, 2.439852e-002, 2.112006e-002, 2.995906e-002, 4.103968e-002, 4.259315e-002, 3.885642e-002, 2.202657e-002, -1.700615e-002, -4.699217e-002, -1.413567e-002, 1.892453e-002, 1.396844e-002, 2.092179e-002, 1.238113e-002, 4.271353e-002, -1.979880e-003, -1.719409e-002, -3.518369e-002, -8.826516e-003, 1.285501e-002, 1.264159e-002, 6.377873e-003, 2.337595e-003, 5.787224e-003, 1.746756e-002, 2.607583e-002, 3.422276e-002, 3.149410e-002, 1.255632e-002, -1.498154e-002, -3.654266e-002, -2.844510e-002, -1.158137e-002, 1.545644e-002, 1.568087e-002, 1.017830e-002, 3.204888e-002, -2.306525e-002, 3.504820e-002, -2.271740e-002, 4.206311e-003, 1.572765e-002, 2.138392e-002, 3.626174e-002, 2.931729e-002, 1.560182e-002, 1.316024e-002, 1.674568e-002, 1.988690e-002, 1.613489e-002, 9.894005e-004, -1.723737e-002, -3.352708e-002, -3.696148e-002, -2.537149e-002, -3.408378e-003, 9.607260e-003, 8.115796e-003, -5.680419e-003, 8.620555e-003, 5.241232e-003, -5.307566e-002, 1.382471e-002, -3.710791e-002, 9.267214e-003, 2.185744e-002, 5.849722e-003, 6.778258e-003, -2.773922e-003, -4.494171e-003, 9.030613e-003, 1.417124e-002, 1.666927e-002, -8.920665e-003, -3.165819e-002, -3.396037e-002, -2.318757e-002, 1.871323e-003, 2.527204e-002, 2.105398e-002, 3.301053e-003, -1.650586e-002, -2.215061e-002, -1.161554e-002, -2.276615e-002, -4.330170e-002, 5.441640e-003, -1.819490e-002, 2.563208e-002, 1.285769e-002, -1.973916e-002, -1.808628e-002, -2.248382e-002, -1.913470e-002, 5.658158e-003, 1.531697e-002, 1.898490e-002, -1.255024e-002, -3.063709e-002, -1.848187e-002, 1.716300e-002, 4.291732e-002, 5.103545e-002, 1.364805e-002, -1.457281e-002, -2.525202e-002, -2.606600e-002, -2.841562e-002, -7.950287e-003, -3.520683e-002, 2.431731e-002, 1.286887e-002, 3.431749e-002, 3.325513e-002, -2.449580e-002, -3.017421e-002, -1.633415e-002, -5.951893e-003, 6.964368e-003, 1.830859e-002, 1.758564e-002, -1.422031e-002, -2.827614e-002, -1.157219e-002, 2.120865e-002, 3.965896e-002, 3.077927e-002, -2.249666e-003, -7.058562e-003, -1.075816e-003, -3.310524e-003, -2.639713e-002, 1.277320e-002, -4.002118e-002, 2.429080e-002, 2.604216e-002, -8.939682e-004, 8.148139e-002, 1.502666e-002, -1.942394e-002, -6.141615e-003, 1.254797e-003, 4.555789e-003, 4.136732e-003, -6.214639e-003, -3.936382e-002, -5.867790e-002, -4.936999e-002, -1.776561e-002, 7.569874e-004, 6.851474e-003, 8.689428e-003, 4.079843e-002, 3.931253e-002, 3.872159e-003, -6.569376e-003, 4.306226e-002, -4.689790e-002, 1.383176e-002, -2.180567e-003, -7.230032e-002},
{1.649991e-002, -8.294305e-003, -1.545947e-002, -2.664674e-003, -1.020131e-001, -1.511671e-001, -5.116013e-002, 5.463971e-002, 4.271601e-003, -6.332212e-002, -1.388409e-002, -4.857815e-002, 1.576661e-003, 1.958894e-002, -1.518469e-002, -7.570597e-002, -4.936813e-002, 4.931876e-002, 9.026376e-002, 6.606499e-002, 5.243128e-002, 4.426284e-002, 9.431594e-002, 3.136489e-002, -3.054609e-002, -4.495057e-002, 4.981323e-003, 7.858140e-002, -1.099187e-002, -8.311584e-002, -3.126734e-002, 3.633638e-002, -2.397593e-002, -5.318225e-002, 4.837759e-002, -1.586771e-002, -2.429907e-002, 3.324944e-002, 5.687674e-002, 4.910891e-002, 4.050108e-002, 3.134485e-002, 3.982505e-002, 6.163701e-002, 8.535748e-002, 3.251143e-002, 5.111331e-002, 9.428408e-003, -8.930569e-002, -3.695508e-002, 8.705042e-002, 1.301085e-001, 5.051593e-002, -1.560632e-002, -3.007000e-003, 3.386915e-002, -2.774442e-002, -4.148004e-002, 4.682293e-002, 5.957370e-002, -6.539519e-003, -4.399442e-002, -5.112099e-002, -5.973391e-002, -6.243618e-002, -6.876119e-002, -5.008603e-002, 1.967471e-002, 6.899626e-002, 1.902112e-002, 7.515603e-003, -2.093650e-002, -1.189375e-002, 5.104030e-002, 1.142684e-001, 8.772197e-002, 4.992951e-002, 1.691669e-002, 1.620561e-002, 3.287720e-002, -4.102208e-002, -2.894969e-002, -4.707119e-003, 1.692195e-002, 3.685178e-002, 2.124071e-002, 1.317340e-003, -2.122880e-002, -3.050783e-002, -4.103733e-002, -3.821255e-002, 9.387551e-004, 9.722939e-003, -2.236177e-002, -6.456759e-003, -9.553309e-003, 2.261511e-002, 4.324349e-003, -1.951220e-002, -1.176187e-002, 3.020092e-002, -8.856126e-004, 1.730054e-003, 3.292955e-002, -3.347256e-002, -8.162863e-003, 4.293451e-002, -6.536000e-002, -7.006345e-002, 2.394699e-002, 8.015560e-002, 7.620188e-002, 5.427596e-002, 1.715939e-002, -2.373941e-002, -4.398181e-002, -5.670280e-002, -4.384217e-002, -1.985970e-004, 3.721269e-003, -7.796620e-002, -1.149543e-001, -1.103345e-001, -1.641370e-002, 2.383844e-002, -2.876325e-002, -1.120647e-002, 5.402457e-002, -1.035639e-002, -2.930484e-003, 1.141902e-001, 2.516598e-002, -1.394808e-001, -1.249956e-001, -3.691385e-002, 1.713054e-002, 2.890867e-002, -3.903908e-003, -4.165634e-002, -6.828570e-002, -7.651368e-002, -2.487910e-002, 2.229516e-002, -1.402735e-002, -3.836019e-002, -4.408700e-002, -3.169520e-002, 3.438299e-002, 5.484835e-002, -4.186398e-002, -3.324323e-002, 5.903741e-002, 1.431309e-002, -1.136143e-002, 7.667075e-002, 1.059198e-001, 2.836561e-003, -3.587199e-002, -3.445820e-003, 5.047984e-002, 7.629495e-002, 5.702150e-002, 1.828598e-002, -3.111044e-002, -4.390599e-002, 2.735159e-003, 3.678566e-002, -1.748448e-002, 7.415420e-002, 6.856492e-002, 2.262613e-002, 5.079863e-002, 5.393724e-002, -5.224926e-002, -7.835122e-002, 5.285954e-003, 1.087465e-003, -6.528945e-002, -2.342452e-002, -3.372687e-002, 1.917677e-002, 7.796575e-002, 9.914146e-002, 1.242495e-001, 1.330153e-001, 9.112927e-002, 3.363459e-002, -2.018362e-002, -2.464953e-002, 1.863452e-002, 4.536838e-002, -2.080862e-002,


© ISO/IEC 2004 — All rights reserved

Copyright International Organization for Standardization
Provided by IHS under license with ISO
No reproduction or networking permitted without license from IHS
Not for Resale

6.779623e-002, 6.448509e-002, -1.961579e-002, -3.259334e-002, 5.078831e-002, 5.049769e-002, -4.576387e-002, -5.866803e-002, -7.128731e-002, -2.539432e-002, 2.933380e-002, -9.680995e-002, -8.366903e-002, 1.128314e-002, 3.787987e-002, 4.295366e-002, 3.576188e-002, 3.096227e-003, -2.194313e-002, -3.644995e-002, -1.971526e-002, 1.101559e-002, 3.317147e-002, -2.468705e-002, 1.969514e-002, 1.177044e-002, -4.421166e-002, -9.608821e-002, -9.138398e-003, 6.067950e-002, 3.255198e-002, 4.324812e-002, 5.437700e-003, -4.729204e-002, 2.098138e-002, -4.487937e-002, -6.853774e-002, -1.341154e-002, -4.398567e-003, -3.361946e-002, -7.016888e-002, -8.027274e-002, -6.541721e-002, -4.937731e-002, -1.332753e-002, 3.247310e-003, 3.767548e-003, -2.183543e-002, -1.496399e-002, -1.051121e-002, -2.300120e-002, -1.657902e-002, 1.179001e-002, 1.198378e-002, -1.031810e-002, 5.902441e-002, 7.493273e-002, -1.559110e-002, -6.230499e-003, -3.359606e-003, -2.006355e-002, 1.686507e-002, 3.278047e-002, -2.730293e-002, -9.615993e-002, -1.035439e-001, -6.967874e-002, -4.074045e-002, 1.108014e-003, -3.470002e-002, -3.415861e-002, -8.047274e-002, -7.209548e-003, -5.205074e-003, -8.872729e-003, -2.131082e-003, 1.487066e-002, -8.782318e-003, -6.563417e-002, -5.283317e-003, 4.302667e-002, -1.063024e-004, -5.282365e-003, -5.012909e-003, -1.151247e-002, 2.528753e-002, 6.937931e-002, 2.204717e-002, -6.108396e-002, -7.205397e-002, -3.551064e-002, -1.546995e-002, 4.178766e-003, -5.105577e-002, -5.271902e-002, -1.117565e-001, 1.371643e-002, -9.193111e-003, -2.297365e-002, -9.243491e-003, 2.534593e-003, -1.352625e-002, -2.195273e-002, 1.983447e-002, 3.093016e-002, 1.435926e-002, -1.239438e-003, -2.983331e-002, -3.373053e-002, -9.468640e-003, 4.691425e-002, 5.855165e-002, 9.975023e-003, -6.992455e-003, 4.893758e-003, -9.592823e-004, 6.160081e-003, -3.221179e-002, -5.925981e-003, -7.167235e-002, 3.200934e-002, 3.497967e-003, -2.989374e-002, -2.372556e-002, -3.630331e-003, -8.706688e-003, 3.575948e-003, 3.319410e-002, 2.944364e-002, -1.084771e-002, -1.758103e-002, -7.665931e-003, 1.921374e-002, 2.939433e-002, 1.640203e-002, 4.057184e-002, 5.565690e-002, 4.767848e-002, 2.540246e-002, -9.128067e-003, 2.039486e-002, 1.424049e-003, 7.149688e-002, 1.983290e-003, 4.044084e-002, -1.934465e-003, -5.313553e-002, -5.031895e-002, -2.194952e-002, 6.311759e-003, 2.329378e-002, 2.765090e-002, -2.111343e-004, -4.577754e-002, -6.893404e-002, -3.528719e-002, 4.379548e-002, 7.679337e-002, 1.205722e-002, -5.054804e-003, 5.545911e-002, 7.259283e-002, 1.630464e-002, -9.170818e-003, 3.302049e-002, 3.643780e-004, 6.540854e-002, 2.927271e-002, 3.400301e-003, 3.747149e-002, 5.740058e-002, 1.806779e-002, -1.889828e-002, -1.112887e-002, 5.967281e-003, 2.961690e-002, 8.295199e-003, -1.485685e-002, -4.859419e-002, -4.301714e-002, 6.297656e-003, 4.025890e-002, -3.098836e-002, -5.231798e-002, 2.473515e-002, 4.908341e-002, -1.258773e-002, -1.017907e-002, 1.836099e-002, -3.645958e-002, -7.889194e-003, -1.210836e-003, -5.981452e-002, 2.965191e-002, 7.219480e-002, 3.983885e-002, -1.363851e-002, -2.356771e-002, 6.497952e-003, 3.877367e-002, 2.959544e-002, 1.600148e-002, -3.295149e-002, -6.041604e-002, -6.365680e-002, -1.757619e-002, -2.947853e-002, -5.196883e-002, -3.054691e-003, -1.340887e-003, -4.139389e-002, -1.111224e-002, -1.440712e-002, -6.951387e-002, -5.683217e-002, -1.933593e-002, -8.981646e-002, -1.211807e-002, 1.936424e-002, 3.033616e-003, -3.508659e-002, -4.345519e-002, -2.066128e-002, 2.281565e-002, 4.666548e-002, 5.504588e-002, 1.724951e-002, -2.752009e-002, -6.271351e-002, -2.721089e-002, 1.290815e-002, -4.836979e-004, 6.290480e-003, -2.038325e-002, -3.450365e-002, -5.801849e-003, -6.406762e-003, -2.068297e-002, 1.438134e-002, 9.440461e-003, -4.015884e-002, 1.227632e-002, 4.285655e-002, 3.086280e-002, -1.125620e-002, -3.974057e-002, -3.228445e-002, -5.620458e-003, 2.029380e-002, 3.409302e-002, 1.333393e-002, -1.162861e-002, -1.915644e-002, 9.661018e-003, 2.847130e-002, 1.831372e-002, 1.580012e-002, -2.295809e-003, -1.560707e-002, 7.517868e-004, 3.654323e-002, 2.536262e-002, 6.780289e-002, 1.272470e-002, 8.054862e-003, 2.186588e-002, 3.819209e-002, 3.336552e-002, 1.312799e-002, 8.466336e-003, 6.211962e-003, 6.391788e-003, 7.084439e-003, 7.069377e-003, 3.033577e-003, 9.104243e-003, 2.887061e-002, 3.323311e-002, 1.579388e-002, 4.940552e-003, 1.464993e-002, 2.469112e-002, -1.468978e-002, 4.045761e-003, 6.740970e-002, 8.072980e-003, 3.524992e-002, -1.137806e-002, 2.654455e-002, 1.237389e-002, 1.003420e-003, -2.066810e-002, -4.092435e-002, -3.184544e-002, -1.805037e-002, -5.582961e-003, 3.259337e-003, 7.029086e-003, 6.598332e-003, 1.733876e-002, 5.124638e-002, 4.966866e-002, 1.695545e-002, 7.894023e-003, 3.512794e-002, 3.125608e-002, -4.054675e-002, 1.413277e-002, 4.154079e-002, -2.875082e-002, -1.592482e-002, -8.115276e-003, 3.388295e-002, 2.892673e-002, 1.080523e-002, -1.529246e-002, -3.105683e-002, -1.904776e-002, -7.255615e-003, 7.259351e-003, 7.795155e-003, -5.310194e-004, -7.998714e-003, 1.324796e-002, 4.866012e-002, 5.982177e-002, 3.274441e-002, 2.180840e-002, 4.036556e-002, 2.383499e-002, -4.078499e-002, 2.610516e-002, 4.906790e-003, -3.765954e-002, 5.458198e-003, 3.931711e-002, 9.610850e-003, 9.374793e-003, 6.895115e-003, 9.252349e-003, 1.497711e-002, 2.708725e-002, 2.870277e-002, 2.196788e-002, -6.507722e-005, -3.276167e-002, -4.270495e-002, -1.170044e-002, 2.903765e-002, 5.970802e-002, 2.426677e-002, -4.952896e-003, 2.199749e-002, 4.142766e-002, -9.687991e-003, 1.290996e-002, 9.780782e-005, 1.204368e-003, 2.040221e-002, 2.599748e-002, -3.663148e-002, -3.764175e-002, -3.496827e-002, -1.774247e-002, 5.347852e-003, 1.952349e-002, 1.173947e-002, -2.292283e-003, -4.061439e-002, -7.769923e-002, -9.971844e-002, -6.567299e-002, -2.337383e-002, -2.960501e-003, -4.822695e-002, -5.400075e-002, -1.804398e-002, 2.755854e-002, -1.980128e-003, -9.188853e-003, -1.065130e-002, 3.436446e-002, 2.214148e-002, -4.900154e-002},

© ISO/IEC 2004 — All rights reserved


Copyright International Organization for Standardization
Provided by IHS under license with ISO
No reproduction or networking permitted without license from IHS
Not for Resale

{4.909453e-002, -5.176335e-002, -1.027952e-001, -4.194870e-002, -4.573153e-003, -8.657041e-002, -2.363698e-002, 1.281466e-002, 2.127239e-002, -5.149835e-002, -7.625655e-004, -8.227079e-002, -4.501025e-002, 7.695614e-002, 1.755640e-001, 1.279572e-001, 3.289831e-002, 1.745648e-002, 1.538981e-002, -1.736469e-002, -3.904893e-002, -5.813728e-003, 2.330633e-003, -8.892944e-002, -4.751729e-002, -6.835987e-002, -4.153954e-002, 1.994215e-002, -2.650360e-003, -7.631641e-002, -4.257651e-002, -1.334624e-002, 6.443918e-003, -2.928229e-002, 7.854954e-002, 5.035140e-002, -3.305980e-002, -2.383469e-002, 5.737615e-003, -5.096430e-003, -3.353776e-002, -2.964486e-002, -1.387447e-002, -3.641617e-002, -5.537215e-002, -1.281519e-002, 1.075567e-002, -4.220963e-002, 1.714334e-002, 4.283938e-002, 5.819030e-002, 4.510669e-002, -3.421018e-002, -3.555063e-002, -4.629870e-002, -1.295425e-002, 5.997756e-003, -1.222566e-002, 3.235486e-002, 1.309066e-001, 5.539616e-002, -1.093342e-002, -3.884330e-002, -6.517382e-002, -7.287741e-002, -3.878206e-002, 1.034731e-002, 1.620109e-002, -2.109355e-002, -2.003770e-002, -6.890647e-003, -1.403243e-002, 1.098957e-001, 1.162049e-001, 6.937437e-002, -1.540527e-002, -2.148184e-002, -9.422773e-003, -3.962627e-002, -5.775730e-003, -1.627345e-003, 1.036067e-002, -4.003265e-002, -1.154981e-002, 5.609973e-002, 2.665823e-002, -1.754988e-002, -4.292847e-002, -4.272244e-002, 4.935056e-003, 6.700037e-002, 8.107090e-002, 2.380288e-002, -1.864007e-002, -6.135577e-003, -5.459724e-004, 8.246824e-002, 4.773284e-002, -5.309781e-002, -5.972188e-002, 3.468541e-002, 1.455250e-002, -2.183493e-002, 2.584357e-003, -3.405410e-003, -8.578610e-004, -2.489530e-002, -1.278127e-001, -1.208661e-001, -6.267890e-002, -4.715189e-002, -5.304257e-002, -4.296126e-002, 1.162749e-002, 7.829750e-002, 9.206260e-002, 3.836884e-002, -1.226572e-002, -9.943131e-003, -1.012894e-002, 4.078144e-002, -8.052540e-003, -5.738898e-002, 1.119705e-002, 6.338202e-002, 3.191095e-002, -9.808647e-003, -6.541909e-003, -1.310827e-002, -1.978317e-002, -3.488480e-003, -5.459554e-002, -8.555800e-002, -9.290141e-002, -8.830046e-002, -6.750048e-002, -2.004796e-002, 4.508247e-002, 1.089606e-001, 1.057169e-001, 4.409483e-002, 1.412244e-002, 3.438883e-003, 1.653272e-003, 4.441489e-002, -2.695627e-003, 3.763470e-003, 1.301228e-002, -1.542996e-002, 1.008756e-002, 6.968212e-003, 1.556115e-002, 9.323514e-003, -3.419954e-002, -1.507772e-002, -1.861404e-002, 2.614940e-002, 6.980847e-002, 8.436304e-002, 1.081285e-001, 1.338322e-001, 1.438005e-001, 1.308798e-001, 7.979409e-002, 3.409654e-002, 3.846792e-002, 1.290402e-002, 9.548763e-003, -1.472319e-002, -8.787511e-003, 1.976055e-002, -2.768859e-002, -3.018870e-002, 5.461402e-003, 8.972971e-003, 7.559684e-002, 9.214359e-002, -6.128370e-003, -7.725880e-003, -2.955013e-002, -3.204675e-003, 5.186083e-002, 4.475291e-002, 4.723943e-002, 5.613329e-002, 3.406434e-002, 1.300811e-002, 3.120502e-003, 1.406888e-002, 5.066892e-002, 2.591037e-002, 2.130416e-002, -5.209415e-002, 1.574388e-003, 1.112094e-002, -1.330813e-002, 2.237923e-002, -4.526722e-002, -6.713375e-002, 2.241525e-002, 7.493885e-002, 4.548362e-002, 6.361016e-002, 1.393622e-002, -2.807792e-002, -1.804900e-002, -5.045036e-002, -9.338199e-002, -1.018674e-001, -1.101695e-001, -9.659100e-002, -5.377130e-002, -2.391735e-003, 4.319978e-002, 3.102420e-002, 5.199093e-002, -2.344926e-002, 2.234716e-002, 1.719984e-002, 5.804272e-003, 9.478683e-003, -9.958583e-003, 2.356415e-003, 1.381872e-002, -2.214672e-002, -4.244789e-002, 4.679927e-002, 4.188468e-002, -1.007931e-002, -2.776270e-002, -3.749683e-002, -8.982375e-002, -1.309267e-001, -1.446488e-001, -1.209318e-001, -6.338153e-002, 1.323387e-003, 2.929708e-002, 2.221052e-002, 6.261939e-002, 9.249376e-003, 2.165446e-002, -4.182490e-003, -2.233381e-002, -2.527893e-002, -2.184304e-002, 1.353909e-002, 1.795023e-002, -2.673157e-002, -5.594664e-002, 7.199857e-004, 2.857462e-002, 2.048880e-004, -1.430209e-002, 1.191072e-002, 2.206099e-003, -6.376533e-002, -1.143648e-001, -8.876169e-002, -4.633133e-002, -1.424079e-003, 3.763769e-004, 5.026915e-003, 1.719123e-002, 3.577495e-002, 3.629029e-002, 2.741733e-002, 1.510983e-002, -2.084306e-002, -3.300398e-002, -9.143740e-004, 1.490366e-002, -2.406618e-003, -4.753192e-003, 2.102175e-002, 4.134595e-002, 3.414332e-002, 1.982748e-002, 4.430500e-002, 8.217657e-002, 2.793157e-002, -4.817780e-002, -3.630566e-002, -1.439288e-002, -3.739638e-003, -1.676361e-002, -3.133307e-002, -6.482175e-002, 4.202267e-002, 4.171760e-002, 4.996905e-002, 4.344102e-002, -3.908778e-003, -6.286696e-003, -8.881292e-004, -1.477885e-002, -2.992830e-002, -3.115126e-002, -3.280639e-004, 2.155626e-002, 1.662215e-002, 6.274548e-003, 3.908387e-002, 1.121518e-001, 1.020647e-001, 2.468696e-002, 1.503658e-002, -2.640028e-003, -1.829578e-002, -1.230041e-002, -4.518384e-002, -7.228385e-002, 1.636251e-002, -3.294775e-002, -4.861751e-002, -1.705175e-002, 2.993384e-002, 4.518913e-002, 1.970731e-002, -1.105259e-002, -1.328245e-003, -3.288299e-002, -3.371533e-002, -2.229075e-002, -2.313080e-002, -1.960372e-002, 6.880388e-003, 7.541222e-002, 1.080908e-001, 6.889616e-002, 4.430199e-002, -6.252097e-003, -2.700827e-002, 1.231628e-002, 1.037919e-002, 2.352542e-002, -4.061674e-002, -5.742158e-002, -1.023514e-002, 4.184146e-002, 4.509202e-002, 6.065815e-003, -3.685872e-002, -6.036426e-002, -2.021218e-002, -1.142305e-002, 4.854804e-003, 2.219913e-002, 3.324581e-002, 1.376746e-002, -6.000999e-004, 2.372378e-002, 6.393558e-002, 6.997504e-002, 4.437276e-002, -1.077306e-002, -2.856207e-002, 4.987630e-002, 4.500983e-002, 7.642539e-002, -6.336273e-002, -3.655479e-002, 1.688413e-002, 3.095327e-002, -4.387549e-003, -2.385865e-002, -2.487631e-002, -2.943912e-002, 9.681625e-003, 3.651179e-002, 3.954201e-002, 3.793135e-003, -3.623053e-002, -3.242228e-002, -2.352220e-002, -3.385548e-002, -1.596360e-002, 2.803361e-002, 2.174323e-002, -1.012892e-002, -2.165841e-002, 5.331086e-002, 9.652461e-003, 4.070689e-002, -


© ISO/IEC 2004 — All rights reserved

Copyright International Organization for Standardization
Provided by IHS under license with ISO
No reproduction or networking permitted without license from IHS
Not for Resale

3.219076e-002, 1.190167e-002, 3.820303e-002, 3.485447e-002, 4.702029e-003, -2.873529e-003, 5.145607e-003, 4.088660e-003, 2.221910e-002, 4.691646e-002, 4.966324e-002, 4.610587e-002, 1.216973e-002, 9.630309e-005, -1.873737e-002, -6.872758e-002, -7.707203e-002, -2.541864e-002, 1.929029e-003, 3.965652e-004, -1.329499e-002, 2.396919e-002, -3.131802e-002, 1.029560e-002, -2.178627e-002, 1.431286e-002, 2.010868e-002, 1.929621e-002, 1.683851e-002, 2.721762e-002, 2.718772e-002, 3.094661e-002, 3.735934e-002, 2.226737e-002, -1.636905e-004, -1.749894e-002, -3.116786e-002, -2.527214e-002, -2.996913e-002, -6.257091e-002, -7.954460e-002, -2.603371e-002, 1.092634e-002, 2.384046e-002, -1.734933e-002, 2.015296e-002, -5.041216e-002, 1.920888e-002, -2.067156e-002, 6.524377e-005, -3.513903e-003, -9.144831e-003, -8.114659e-003, 2.456631e-003, -6.802416e-003, -8.388193e-003, 2.479422e-003, 3.988475e-003, -8.522384e-003, -5.773303e-003, -9.093425e-003, -4.632762e-003, -2.254382e-002, -5.429175e-002, -5.382520e-002, -1.067099e-002, 2.653453e-002, 1.140202e-002, -4.381179e-002, 3.758316e-002, -6.254698e-002, 2.248414e-002, -1.851034e-002, 4.889056e-003, 8.796581e-003, 1.609555e-002, 2.142716e-002, 2.308458e-002, 9.159924e-003, -9.148560e-003, -2.015590e-002, -2.146821e-002, -5.029465e-003, 1.811956e-002, 3.560420e-002, 2.760575e-002, -2.889536e-003, -2.815344e-002, -2.614707e-002, -1.347587e-002, 2.650174e-002, -9.002972e-003, -6.309782e-002, 3.692774e-002, -7.380993e-002, 9.700446e-003, -2.297622e-002, -1.749343e-003, -2.773652e-003, -5.856533e-003, 1.999276e-003, 1.207034e-002, 9.104913e-003, 4.464635e-003, -4.907775e-003, -1.876690e-002, -1.576155e-002, -1.680896e-003, 2.122107e-002, 2.187236e-002, 1.567552e-002, 5.622339e-003, -2.104683e-002, -3.135700e-002, 1.313241e-002, -9.549172e-003, -2.762025e-002, 3.521093e-002, -4.635093e-002, 2.215225e-002, -1.483634e-002, 6.875693e-003, 5.695614e-003, -2.453457e-002, -2.350552e-002, -9.586990e-003, -1.294971e-002, -2.192484e-003, -2.095866e-003, -2.089349e-002, -2.958466e-002, -1.287181e-002, 4.874432e-003, 1.864453e-002, 2.518875e-002, -2.578239e-003, -4.175925e-002, -3.498369e-002, 9.654996e-003, 1.723264e-002, 1.658648e-002, 2.649775e-002, -2.293507e-002, 1.731311e-002, -1.581881e-002, 2.187510e-002, 2.637064e-002, -8.221306e-003, -2.549002e-002, -1.613716e-002, -1.356233e-002, 6.788534e-003, 1.391274e-002, 1.506540e-003, -1.936933e-002, -1.264051e-002, 3.689994e-003, 1.930375e-002, 2.011019e-002, -2.332448e-002, -4.075553e-002, 7.084332e-003, 1.226739e-002, 1.801685e-002, 1.752260e-002, -1.751456e-003, -2.207307e-002, 5.031280e-003, -1.934785e-002, 2.942809e-002, 3.793058e-002, 1.191664e-002, -4.205670e-003, 1.337226e-003, 8.788189e-003, 2.910445e-002, 4.482194e-002, 3.063078e-002, 8.121508e-003, 6.428134e-003, 2.511121e-002, 3.165709e-002, 7.519589e-003, -1.081968e-002, 1.704760e-002, 5.089782e-002, 1.189429e-002, 3.224699e-003, -6.130988e-003, -3.750835e-002, -4.779339e-002, -8.725966e-004},
{1.150896e-001, 8.912552e-002, 1.422691e-002, -4.999616e-002, 5.128004e-002, -9.615825e-003, -6.528594e-002, -3.508408e-002, -6.192630e-002, -1.422102e-001, 2.594189e-002, 5.560003e-002, 8.046494e-003, -4.240899e-002, -3.254981e-002, -3.892428e-002, -5.352505e-002, -3.188237e-002, -2.071915e-002, -1.518310e-002, -3.635825e-002, -8.370628e-002, -2.373924e-002, 5.771327e-002, 1.155736e-001, 4.504619e-002, -7.075962e-002, -8.119838e-002, 7.136697e-002, -1.300861e-002, -1.405610e-002, 1.041889e-002, 2.443963e-002, -7.793969e-002, 3.799884e-002, 8.798540e-002, 3.075744e-002, 3.909241e-003, 2.769652e-002, 6.613219e-002, 9.506389e-002, 9.286152e-002, 3.928810e-002, -1.104375e-002, -2.691812e-002, -5.444658e-002, -4.777894e-002, -8.380617e-003, 2.108551e-003, -5.759407e-002, -1.300314e-001, -1.634241e-002, 8.775723e-002, -5.689977e-003, 3.510826e-003, 4.864600e-003, 5.517493e-002, 2.976691e-002, 1.720309e-002, 9.137747e-002, -1.263417e-002, -9.289978e-002, -9.395592e-002, -4.789779e-002, 1.592495e-002, 5.497590e-002, 4.245958e-002, 2.703740e-003, 1.929333e-003, 2.738357e-002, -2.251342e-002, -2.976924e-002, -2.733961e-002, -3.950378e-002, -1.613800e-002, 1.020350e-001, 4.337684e-002, -1.209320e-002, -2.141841e-002, -2.535835e-002, 2.284823e-002, 9.573932e-002, -3.891449e-003, 4.850141e-002, 2.838904e-002, -7.468960e-002, -1.347901e-001, -1.127227e-001, -4.384193e-002, 3.280276e-002, 6.212753e-002, 2.899253e-002, 2.258475e-002, 8.836455e-002, -1.392710e-003, -1.125651e-002, 6.961690e-002, 6.754519e-002, 5.107688e-002, 3.731456e-002, -1.001890e-002, -3.903231e-002, -3.513325e-002, -2.981673e-002, -1.320151e-002, 6.003663e-002, 2.884819e-002, -5.623880e-002, 1.036869e-002, 9.617473e-003, -3.853450e-002, -4.818668e-002, -3.102097e-003, 6.872445e-002, 8.320852e-002, 2.163996e-002, 1.828019e-002, 1.017071e-001, 1.466395e-002, 2.732668e-002, 7.662942e-002, -5.661750e-003, -8.246561e-002, -3.398114e-002, -2.738641e-002, -5.301185e-002, -5.070245e-003, 1.543232e-002, 1.055182e-002, 4.840685e-002, 4.783133e-002, -4.190948e-002, -8.597065e-002, -4.700000e-002, -2.892987e-002, -1.317860e-002, 1.671507e-002, 6.183245e-002, 5.592333e-002, -3.646673e-003, -1.322526e-002, 8.590105e-002, 2.437373e-002, 6.838484e-002, -2.472817e-002, -1.123720e-001, -9.447496e-002, -1.565517e-002, -9.499137e-003, -2.355255e-002, 4.102888e-002, 3.785489e-002, 4.366187e-002, 8.010362e-002, 1.171068e-002, -5.444373e-002, -6.086046e-002, -3.425149e-002, -9.601955e-003, 2.054474e-002, 4.736259e-002, 6.324102e-002, 2.938530e-002, -3.333648e-002, -4.609471e-002, 4.929218e-002, 1.569865e-003, 5.564662e-002, -4.616913e-002, -4.425942e-002, 1.674357e-002, -4.009540e-003, -5.113132e-002, -6.895627e-002, 1.988852e-002, 1.732111e-002, 1.389586e-002, 5.297335e-002, -4.175283e-002, -1.053487e-001, 3.314928e-003, 2.925999e-002, 3.408005e-002, 4.368336e-002, 4.460426e-002, 3.015262e-002, -8.354789e-003, -6.734207e-002, -6.922663e-002, 1.716986e-002, -4.275863e-002, 8.213448e-003,

© ISO/IEC 2004 — All rights reserved


Copyright International Organization for Standardization
Provided by IHS under license with ISO
No reproduction or networking permitted without license from IHS
Not for Resale

3.095077e-002, 8.976172e-002, 5.921444e-002, -1.113865e-002, -5.688724e-002, -1.951010e-002, 5.173212e-002, -1.668860e-003, -6.866891e-002, 3.241178e-003, -2.915249e-002, -8.082643e-002, 7.944097e-002, 9.209099e-002, 3.809948e-002, 1.848338e-002, 8.722309e-003, -2.452037e-003, -3.273189e-002, -7.797950e-002, -7.961095e-002, -2.301256e-002, -7.900068e-002, -1.499667e-002, 8.728693e-002, 8.884815e-002, 7.955817e-003, -3.538010e-002, -2.068062e-003, 3.414444e-002, 4.792293e-002, -8.578804e-003, -9.410547e-002, -4.420225e-002, -4.849377e-002, -5.448165e-002, 9.181996e-002, 1.223507e-001, 5.669189e-002, 1.321081e-002, -9.350316e-003, 2.760017e-003, -2.150907e-002, -6.044893e-002, -6.987954e-002, -4.662336e-002, -7.859469e-002, -2.013986e-003, 4.397505e-002, -1.892269e-002, -5.978224e-002, -3.475405e-002, 6.539417e-003, 3.841005e-002, 9.550543e-002, 6.270722e-002, -1.769451e-002, -2.550631e-002, -3.676401e-002, -3.694407e-002, 4.126300e-002, 6.324255e-002, 1.935572e-002, -2.433230e-002, -3.011563e-002, 2.455364e-003, 3.699384e-003, -2.145896e-002, -2.959625e-002, -2.786059e-002, -3.567492e-002, -2.904153e-004, -3.321999e-002, -6.962888e-002, -5.104304e-002, -3.427778e-002, -1.555906e-002, 9.650014e-003, 7.183127e-002, 5.320194e-002, -3.240755e-002, -4.743533e-002, -2.966678e-002, -4.122588e-003, 2.888274e-002, 2.319101e-002, -2.777748e-002, -8.308162e-002, -5.372247e-002, 1.271584e-002, 3.242445e-002, 1.522293e-002, 6.209235e-003, -2.774605e-003, 7.997695e-003, -8.612687e-003, -6.362114e-002, -2.238379e-002, 2.672707e-002, 2.923508e-002, 2.193999e-005, -1.973015e-002, -4.410029e-003, -1.884571e-002, -7.749235e-002, -7.412246e-002, -3.273461e-002, 1.538660e-002, 4.899538e-002, 3.293985e-002, -4.557903e-002, -1.192951e-001, -7.684770e-002, 2.074084e-002, 6.140853e-002, 4.793014e-002, 2.326250e-002, 1.304930e-002, 1.237509e-002, -1.458309e-002, -5.312522e-002, 4.103476e-002, 9.930460e-002, 6.660454e-002, 1.945025e-002, -2.006463e-002, -1.812066e-002, -2.351691e-002, -3.979561e-002, -1.663430e-002, 2.230905e-002, 4.950262e-002, 6.437435e-002, 2.941723e-002, -4.666364e-002, -1.069620e-001, -7.286726e-002, 2.571121e-002, 7.108039e-002, 5.651061e-002, 1.848153e-002, 1.016852e-002, 1.934574e-003, 5.462551e-003, -4.984291e-002, -6.533078e-003, 3.016137e-002, 1.082606e-002, -8.359685e-003, -3.246630e-002, -3.651478e-002, -3.239404e-002, -9.574387e-003, 1.922425e-003, 2.812844e-002, 2.935389e-002, 9.491563e-003, -3.116976e-003, -2.866333e-002, -5.800114e-002, -4.517759e-002, 1.853737e-002, 4.966267e-002, 3.722018e-002, 7.633207e-004, 1.383430e-002, -8.043536e-003, 3.816969e-002, 2.188273e-003, 2.388709e-002, 2.994254e-002, 1.549124e-002, 7.491369e-003, -1.044870e-002, 1.207616e-003, 1.570728e-002, 2.008395e-002, 2.319433e-004, -1.574652e-002, -2.602970e-002, -3.151797e-002, 1.157579e-002, 4.794971e-002, 2.303906e-002, -6.782529e-003, 6.917919e-003, 2.149811e-002, -2.391359e-003, -6.177918e-003, 1.427405e-002, -2.480507e-002, 2.813904e-002, 3.193759e-002, 4.315052e-002, 3.325202e-002, 1.193661e-002, 1.294143e-003, -4.832907e-003, -4.967122e-003, -1.465091e-002, -1.569043e-002, -1.920791e-002, -2.300112e-002, -3.179578e-002, -6.514829e-003, 4.170400e-002, 6.065014e-002, 3.075798e-002, -8.650791e-003, -1.492780e-002, -6.119863e-003, -3.029624e-002, -1.721091e-002, 1.717010e-004, -3.708876e-002, -2.053173e-004, -2.571508e-002, -3.260153e-002, -1.837520e-002, -6.487829e-003, 9.506420e-003, 2.658350e-002, 3.264690e-002, 2.624592e-002, 5.100883e-003, -1.428750e-002, -2.643079e-002, -3.040250e-002, -1.369734e-002, 1.082046e-002, 3.257324e-002, 5.516748e-003, -2.173642e-002, -2.584525e-002, -1.467698e-003, -9.685787e-003, 9.009938e-003, 1.694549e-002, -3.820249e-002, 7.347645e-003, -1.642248e-003, -5.259383e-003, -4.744817e-003, 7.813740e-004, 4.711914e-003, -1.612866e-003, -2.023452e-003, 4.347060e-003, -1.494144e-003, -1.209225e-002, -1.575852e-002, -9.931965e-003, 4.187972e-003, 1.542987e-002, 2.653853e-002, 1.615881e-003, -1.697804e-002, -4.513038e-004, 2.536847e-002, 2.817444e-002, 2.918789e-002, 3.875904e-002, -2.844921e-002, -2.233458e-003, 2.550197e-002, 1.626729e-002, 8.204391e-003, 4.859400e-003, 7.691591e-003, 1.159475e-002, 1.794911e-002, 2.878479e-002, 2.723258e-002, -6.226249e-004, -3.842788e-003, -5.051423e-003, -8.950795e-003, -1.434218e-003, 4.095594e-003, 9.849882e-003, 1.485300e-002, 1.600599e-002, 3.330901e-002, 3.253718e-002, 6.928308e-003, 1.875382e-002, -4.092991e-003, -2.266018e-002, 1.149586e-002, 6.259168e-003, 3.430828e-004, -1.815122e-002, -2.607920e-002, -2.706706e-002, -2.340648e-002, -6.505987e-003, -5.634647e-003, -1.836514e-002, -2.053348e-002, -2.805563e-002, -3.228195e-002, -4.303772e-002, -2.564782e-002, 2.049340e-002, 2.589426e-002, -1.924492e-002, -1.008539e-002, 2.776714e-002, -1.405050e-002, -1.338333e-002, 3.046866e-002, -4.559581e-002, -1.178603e-002, -1.004060e-002, 9.240817e-003, 1.889365e-002, 1.623587e-002, 3.424478e-003, -8.400276e-004, 4.036899e-003, 1.252146e-002, 1.383861e-002, 1.728367e-002, 9.335025e-003, -2.434631e-002, -4.193473e-002, -1.821557e-002, 3.812903e-002, 9.410255e-003, -6.681099e-002, -4.042003e-002, 1.035655e-002, -2.318626e-003, -1.845771e-002, 4.350656e-002, -4.207255e-002, 9.434519e-003, -2.058118e-002, -8.024058e-003, 3.256832e-002, 3.539552e-002, 9.026172e-003, -1.266216e-002, -1.503717e-002, -6.584693e-005, 2.107889e-002, 5.518332e-002, 5.423874e-002, 4.485161e-003, -1.718202e-002, 5.226547e-003, 4.569382e-002, -1.178663e-002, -4.656591e-002, -1.434482e-002, -6.316518e-003, 2.956416e-002, -1.628034e-003, 2.913064e-002, -2.867717e-002, 2.750592e-002, 4.324108e-003, -1.869031e-002, -1.964366e-003, -1.231406e-003, -3.395380e-002, -6.144265e-002, -6.229015e-002, -4.191769e-002, 2.624564e-003, 5.693067e-002, 6.119583e-002, 2.790171e-002, 3.234162e-003, 1.664020e-002, 2.896790e-002, 7.667198e-004, 1.352721e-003, 2.844007e-002, 9.524363e-003, 3.740070e-002, 1.036099e-002, -1.206295e-002, -5.266910e-002},


© ISO/IEC 2004 — All rights reserved

Copyright International Organization for Standardization
Provided by IHS under license with ISO
No reproduction or networking permitted without license from IHS
Not for Resale

{9.696260e-003, -1.239622e-002, 8.718764e-003, -1.463451e-002, -1.211713e-001, -8.525375e-002, -2.424310e-002, -5.844503e-003, -4.311274e-003, 7.833196e-003, -9.305936e-003, -2.549299e-002, 1.484242e-002, 5.542532e-002, 9.386374e-002, 4.294933e-002, -9.016040e-003, 3.617473e-002, 4.323385e-002, -6.840930e-003, -4.410667e-002, -5.606516e-002, -4.814508e-002, -6.381612e-003, 1.712807e-002, 4.217527e-002, 6.712806e-002, 3.646174e-002, -2.365202e-002, -4.008428e-002, -4.754587e-002, -3.479929e-002, -4.823128e-002, 8.854493e-003, 3.865823e-002, -1.391585e-002, -1.003866e-002, 1.725257e-002, 2.565519e-002, 2.806904e-003, -5.942448e-003, 1.255852e-002, 1.299750e-002, -1.316267e-002, -1.113001e-002, 9.633460e-003, 3.440400e-002, 4.999327e-002, 2.368659e-002, 4.944242e-002, 6.352439e-002, 3.562775e-002, 3.857343e-002, -2.339736e-002, -4.786798e-002, -2.238302e-002, -5.642790e-002, -1.747099e-002, 3.819406e-002, -1.312520e-002, -5.119535e-002, -5.677344e-002, -6.178143e-002, -6.830875e-002, -4.960597e-002, -2.072933e-002, -1.653717e-002, -2.166879e-002, 6.846635e-003, 6.514646e-002, 5.942903e-002, 3.701411e-002, 2.640492e-002, 3.710817e-002, 1.754213e-002, 2.383381e-002, 5.503266e-002, -2.112879e-002, -1.444724e-002, 2.699832e-002, -3.143982e-002, -3.780194e-002, -1.443046e-003, -3.670357e-002, -6.766445e-002, -5.850651e-002, -5.522566e-002, -4.960453e-002, -2.488503e-002, -1.583951e-003, -1.349035e-002, -3.179456e-002, -3.961702e-004, 4.926927e-002, 1.890033e-002, 8.326891e-003, 4.658208e-003, -1.473312e-002, -1.700622e-002, 2.128794e-002, 2.727699e-002, 6.798701e-003, 5.266008e-002, 8.268565e-002, 3.238679e-002, -1.595071e-002, 1.095050e-002, -4.917262e-002, -1.217454e-001, -7.348968e-002, -3.549779e-002, -1.613553e-002, 8.597230e-003, 2.158709e-002, -8.027888e-003, -2.132330e-002, -1.805420e-002, 1.230926e-003, -3.911419e-002, -2.761728e-002, 1.891866e-002, 9.023837e-003, 1.280292e-003, 8.947170e-003, 1.360845e-002, 4.911414e-002, 9.605181e-002, 7.978786e-002, 3.298273e-002, -1.706455e-002, 1.380891e-002, 9.957166e-003, -6.467439e-002, -5.712388e-002, -1.757546e-002, 2.443078e-002, 5.805472e-002, 6.671292e-002, 2.549356e-002, -2.513065e-002, -3.653100e-002, -3.954793e-002, -7.036555e-002, -4.807218e-002, 4.761852e-002, 2.492868e-002, -7.781407e-003, -1.964945e-002, -3.536727e-002, 1.330295e-002, 6.294674e-002, 2.205946e-002, -1.816957e-002, -5.007038e-002, -3.362257e-002, 5.055346e-003, -1.065670e-002, 1.995106e-002, 8.766596e-002, 1.323581e-001, 1.504188e-001, 1.151504e-001, 2.996542e-002, -4.258730e-002, -4.796581e-002, -5.058743e-002, -6.444085e-002, -3.811389e-002, -6.894588e-003, -7.061919e-003, 1.822777e-002, 7.698648e-003, -7.279273e-002, -3.193760e-002, 1.210435e-002, -1.579855e-003, 2.545984e-003, 3.880653e-002, 3.685239e-002, 3.591213e-002, 2.099835e-002, -5.638864e-003, 2.843839e-002, 6.800529e-002, 8.267702e-002, 4.270150e-002, -2.924137e-002, -5.775713e-002, -2.925008e-002, -3.195468e-002, -2.432626e-002, -1.606061e-002, -5.769871e-002, -3.800453e-002, 5.173783e-002, 6.782084e-002, -5.548633e-002, -5.761599e-002, -1.726720e-002, -1.683288e-002, -3.521638e-002, 2.117572e-003, 6.994721e-002, 8.025708e-002, 5.436193e-002, -5.136079e-003, -8.318667e-003, 1.526068e-002, 2.557328e-002, -2.653928e-003, -3.955467e-002, -2.957127e-002, 1.468852e-002, 6.316856e-003, 1.645226e-002, -2.556864e-002, -9.401491e-002, -8.158550e-002, 1.762597e-003, 1.071390e-001, 9.318971e-002, -4.541209e-003, -5.723437e-002, -7.022440e-002, -3.980611e-002, 4.114275e-003, 5.414556e-002, 5.570105e-002, 1.409204e-002, -2.123262e-002, -1.227465e-002, 1.517704e-002, 2.347888e-002, 1.582785e-003, -1.724848e-002, 9.135476e-003, 5.208180e-002, 3.386842e-002, 2.781005e-002, -2.210030e-003, -1.111404e-001, -1.234822e-001, -9.614846e-002, 2.611425e-002, 1.013190e-001, 4.456834e-002, -6.909857e-002, -1.044818e-001, -5.471326e-002, 7.500467e-002, 1.371628e-001, 8.631743e-002, -2.385295e-002, -6.965999e-002, -4.658131e-002, 4.639207e-003, 2.561980e-002, 1.428467e-002, 1.351254e-002, 3.123932e-002, 7.354982e-002, 3.272612e-002, 3.072752e-002, 7.257804e-002, -6.049116e-002, -9.828369e-002, -1.213855e-001, -5.895858e-002, 5.005503e-003, 1.782380e-002, -1.482536e-003, -3.351526e-002, -4.460847e-002, 1.921251e-002, 7.972756e-002, 5.277433e-002, -2.714889e-002, -6.300378e-002, -4.802183e-002, -1.177636e-003, 1.492791e-002, 1.260494e-002, 2.671227e-002, 3.268604e-002, 5.976473e-002, 1.802306e-002, 2.286782e-002, 1.069462e-001, 6.561108e-002, 5.737742e-003, -6.310656e-002, -6.834484e-002, -3.924625e-002, 2.681128e-002, 1.023779e-001, 1.054579e-001, 4.426866e-002, 5.140885e-003, -4.806133e-003, -1.563310e-002, -2.708492e-002, -2.137814e-002, 7.682597e-003, 2.830984e-002, 2.129429e-002, 8.817289e-003, 1.497644e-002, 2.215750e-002, 2.590702e-002, -1.600880e-002, -2.337191e-002, 5.876738e-002, 1.530707e-001, 6.198480e-002, -7.886268e-002, -1.275207e-001, -8.073542e-002, 1.990035e-003, 6.754534e-002, 8.458251e-002, 2.325437e-002, -3.348207e-002, -7.273467e-002, -8.321328e-002, -4.592880e-002, 6.552313e-003, 4.577832e-002, 5.482660e-002, 2.748167e-002, 2.641957e-003, -7.804620e-003, -6.416639e-003, -6.042250e-003, -3.309195e-002, -6.561035e-002, -3.613292e-003, 9.156741e-002, 5.344974e-002, 8.418748e-003, -7.073464e-003, -1.002986e-002, -8.267975e-003, 8.398102e-003, 1.578317e-002, -1.039269e-002, -2.536957e-002, -3.272793e-002, -2.237259e-002, 2.787330e-002, 4.090725e-002, 2.176316e-002, 3.154667e-002, 3.206764e-002, -7.829000e-003, -2.994553e-002, -3.167758e-002, -1.039056e-002, -1.511171e-002, -6.499189e-002, -3.833078e-002, -3.822355e-002, -1.504033e-002, 6.259638e-003, 7.631625e-003, -8.576749e-003, -1.634383e-002, -4.275235e-003, 1.059552e-002, -9.522596e-003, 2.554895e-004, 5.038527e-003, 4.193870e-003, -9.724671e-003, -3.636878e-002, -6.470999e-002, -2.783865e-002, 1.150885e-002, -2.405837e-002, -4.403714e-002, -4.587710e-002, 6.377493e-003, 2.409049e-002, -3.338804e-002, -1.965678e-002, -

© ISO/IEC 2004 — All rights reserved


Copyright International Organization for Standardization
Provided by IHS under license with ISO
No reproduction or networking permitted without license from IHS
Not for Resale

3.931220e-002, 2.125435e-003, 1.099600e-002, 4.014226e-003, 7.177458e-003, 1.974745e-002, 3.366673e-002, 2.896965e-002, -4.735145e-003, -2.649818e-002, -3.170010e-002, -1.336626e-002, -5.448781e-003, -2.470995e-002, -6.814401e-002, -4.123528e-002, 8.534208e-003, -9.501162e-003, -3.917878e-002, -2.902008e-002, 2.709413e-002, 7.043718e-002, 1.040639e-003, 3.008554e-002, -2.961344e-002, 1.281168e-002, 1.665620e-002, 5.473953e-003, 5.866248e-003, 3.233698e-002, 4.118463e-002, 2.104390e-002, -2.393445e-002, -6.881695e-002, -8.196314e-002, -4.859779e-002, -5.611060e-003, 1.536561e-002, -3.993693e-003, -6.883128e-003, 1.910397e-002, 1.714291e-002, -2.328493e-002, -1.729806e-002, 2.903016e-002, 6.143752e-002, 6.308308e-003, 2.799069e-002, -1.634475e-002, 8.243257e-003, 2.724190e-002, 1.702562e-002, 5.518929e-003, 1.279410e-002, 2.224898e-002, 1.572559e-002, -1.437676e-002, -4.020735e-002, -4.174800e-002, -1.225483e-002, 1.933559e-002, 4.330705e-002, 3.355777e-002, 1.677512e-002, 3.262378e-002, 3.919830e-002, 7.061020e-003, -1.938412e-002, 2.074432e-002, 1.359240e-002, -1.429026e-002, -2.100955e-002, 3.423062e-002, 2.270083e-002, 1.491385e-002, 1.586152e-002, 9.031447e-003, 9.550924e-004, 2.878086e-003, 1.499685e-004, -2.200572e-002, -3.902035e-002, -3.354537e-002, -6.386072e-003, 1.899121e-002, 2.596169e-002, 1.733561e-002, 1.580175e-002, 4.205591e-002, 6.185004e-002, 2.126741e-002, -2.505006e-002, 7.772673e-003, -1.745611e-002, -2.354412e-003, -8.884569e-003, 7.717868e-002, 4.782326e-002, 9.609086e-003, -1.112870e-002, -2.178204e-002, -2.321454e-002, -7.924369e-003, -4.321669e-003, -1.620657e-002, -4.398547e-002, -5.551039e-002, -4.121947e-002, -1.642042e-002, -5.721426e-003, -3.222674e-003, 8.111444e-003, 3.963484e-002, 5.989777e-002, 1.120625e-002, -1.766563e-002, -1.568838e-003, -2.516842e-002, 9.944393e-003, 7.302257e-003, 8.273041e-002, 8.883562e-002, 3.694011e-002, -1.723035e-002, -3.738729e-002, -1.471567e-002, 1.435688e-002, 3.466566e-002, 2.088156e-002, -9.962855e-003, -3.674821e-002, -2.976528e-002, -1.396152e-002, -2.965454e-004, 2.191618e-003, 5.085745e-003, 2.004189e-002, 3.423972e-002, 4.284583e-003, -1.977372e-002, -6.269778e-003, -2.425316e-002, 1.387465e-002, 1.649942e-003, -7.507133e-003, 5.562505e-002, 3.853503e-002, -2.048723e-002, -4.132293e-002, -1.590617e-002, 2.009367e-002, 3.879460e-002, 2.576809e-002, 3.017491e-003, -1.952561e-002, -1.007654e-002, 1.338948e-002, 1.855894e-002, 9.812439e-003, -2.274923e-003, -1.182742e-002, 1.951384e-002, 3.812289e-003, -2.218456e-002, 4.091686e-003, 8.041550e-003, 8.504043e-003, -3.552172e-002, -1.176291e-001, -4.571306e-002, -7.299655e-003, -2.323456e-002, -3.512419e-002, -1.575092e-002, 5.743259e-003, 3.210024e-002, 2.594136e-002, -7.328032e-004, -2.024432e-002, -4.374062e-004, 1.207664e-002, 5.325468e-003, -9.336766e-003, -3.609521e-002, -4.064498e-002, -7.179126e-005, -9.308898e-003, -4.037179e-002, -1.932783e-002, 3.226036e-002, 1.450660e-002, -6.648593e-002},
{-8.495201e-002, -1.002465e-001, -9.953733e-002, -7.736317e-002, -3.045406e-002, 4.470120e-002, 1.902819e-002, 6.547498e-002, 5.429960e-002, -2.393350e-002, 3.484965e-002, -6.867546e-002, -1.057847e-001, -4.354884e-002, 3.349088e-002, 9.215322e-002, 1.268054e-001, 9.689689e-002, -6.054831e-002, -1.269718e-001, -4.307798e-002, 2.612965e-002, 5.264007e-003, 1.099390e-002, -1.138657e-002, -3.775016e-002, -4.096842e-002, -4.954591e-002, -1.245969e-002, 1.275982e-002, -1.505541e-002, 4.997940e-002, 5.211043e-002, -5.431850e-002, 6.548172e-002, 4.360918e-002, -3.821299e-002, -4.473096e-002, 3.032666e-003, 4.721394e-002, 6.350293e-002, 3.491750e-002, -3.400160e-002, -7.745953e-002, -2.049714e-002, -7.381263e-003, -3.058365e-002, -3.119958e-004, 3.386798e-002, 3.161551e-002, 9.214439e-003, 6.358102e-003, 3.755137e-002, -2.398458e-002, -3.523366e-002, 3.162806e-002, 3.596997e-002, -5.054530e-002, -8.355514e-003, 1.433051e-001, 5.410850e-002, -1.463507e-002, -2.740264e-002, -1.761203e-002, -7.221209e-003, 3.619063e-003, 1.798962e-002, 1.336870e-002, 2.398165e-002, -3.836745e-002, -4.495814e-002, 1.210854e-003, 6.708358e-002, 6.211226e-002, 5.300643e-002, 6.815423e-002, 2.533500e-002, -4.557116e-002, -5.770362e-002, 8.643604e-003, 1.203647e-002, -2.027232e-002, -7.968379e-002, 6.864895e-002, 1.186331e-001, 4.222723e-002, -1.022402e-002, -2.304844e-002, -1.531804e-002, 1.396260e-002, 6.614335e-002, 8.623388e-002, 4.031020e-002, -4.096077e-002, -2.836335e-002, 1.533545e-002, 4.533691e-002, 3.950922e-002, 3.361858e-002, 4.892036e-002, 1.014169e-002, -5.576600e-002, -7.063761e-002, -1.982695e-002, -2.001047e-002, -6.641447e-003, -3.634984e-002, -4.797780e-002, 2.574111e-002, 3.123854e-002, -4.685426e-003, -3.212696e-002, -3.349136e-002, -1.835304e-003, 5.459167e-002, 7.874384e-002, 3.409861e-002, -3.561390e-002, -1.409028e-002, 1.280435e-002, -4.064478e-002, -3.960044e-002, -1.617017e-002, 4.112686e-002, 1.333964e-002, -4.532527e-002, -6.127782e-002, -5.228637e-002, -5.387665e-002, 1.607814e-002, 6.068419e-002, 3.132229e-003, -2.292028e-002, -6.414261e-002, -8.822737e-002, -1.049346e-001, -9.387121e-002, -5.433709e-002, 3.442680e-003, 3.533639e-002, 1.198489e-002, -1.887889e-002, -5.466542e-003, 1.438708e-002, -6.237654e-002, -4.728632e-002, 2.008591e-002, 7.585979e-002, 3.146363e-002, 1.477484e-002, 1.388849e-002, -3.924810e-002, -7.474699e-002, 3.890998e-002, 1.444935e-001, 6.908519e-002, 6.605078e-002, 1.583048e-002, -5.250001e-002, -9.090791e-002, -9.355192e-002, -6.141015e-002, -8.702219e-003, 2.599819e-002, 1.070313e-002, -9.056821e-003, -6.795392e-003, -2.964650e-003, -5.602330e-002, -3.103075e-002, 2.935746e-002, 2.765454e-002, 1.745878e-002, 6.578868e-002, 8.357359e-002, 5.095404e-002, -7.619008e-003, 2.449060e-003, 6.056672e-002, -6.047167e-003, 2.826759e-002, 9.100724e-002, 5.392348e-002, -1.409674e-002, -5.094981e-002, -3.654193e-002, 3.437397e-003, 2.794645e-002, 1.175199e-002, 2.177409e-003, -1.801432e-002, -3.933452e-002, -


© ISO/IEC 2004 — All rights reserved

Copyright International Organization for Standardization
Provided by IHS under license with ISO
No reproduction or networking permitted without license from IHS
Not for Resale

4.103974e-002, 6.034433e-003, -6.867389e-003, -4.648852e-002, -3.159996e-002, -1.522189e-002, 2.748831e-002, 1.011120e-001, 6.496651e-002, -1.748862e-002, -6.493239e-002, -8.687339e-002, -3.183694e-002, 3.474890e-002, 5.138361e-002, -5.697226e-003, -4.387438e-002, -3.695712e-002, -6.573594e-003, 2.034982e-002, 1.993181e-002, 7.473033e-003, -2.857879e-002, -7.412677e-002, 3.775840e-003, 3.694586e-002, 1.892923e-002, 4.841936e-002, 7.269217e-002, -2.199907e-002, -6.284997e-002, -2.646395e-002, -1.744265e-002, -4.120592e-002, -3.030206e-002, 1.777953e-002, 5.343914e-002, 2.739121e-002, 2.735819e-002, -8.762983e-003, -4.465418e-002, -4.453870e-002, -1.536430e-002, 1.827391e-002, 3.868528e-002, 2.356365e-002, -2.623121e-002, -7.105247e-002, 2.369317e-002, 2.664109e-002, 1.855535e-002, 5.252149e-002, 4.527025e-002, -3.154761e-002, -6.229887e-002, -2.361246e-002, -2.041695e-002, -7.246910e-002, -3.322416e-002, 5.657789e-002, 1.163556e-001, 7.841932e-002, 2.181146e-002, -1.228905e-002, -3.588949e-002, -4.241966e-002, -1.461928e-002, 2.455225e-002, 5.029241e-002, 3.980437e-002, 2.933131e-002, -1.037194e-003, -2.378629e-002, -4.314325e-002, -4.298642e-002, -2.637071e-002, -1.171235e-002, 9.978226e-003, 3.727112e-002, 8.293201e-002, 6.618473e-002, -8.224903e-003, -5.394149e-002, -3.166670e-002, 4.355158e-002, 7.466971e-002, 3.561595e-002, -1.146104e-002, -1.842681e-002, -3.441965e-002, -2.082297e-002, 2.941071e-002, 4.124286e-002, 5.070731e-002, 7.127278e-002, 3.188653e-002, -7.115762e-002, -6.936121e-002, -6.420206e-002, -5.311920e-002, -2.747014e-002, 3.776787e-002, 1.006479e-001, 9.929654e-002, 5.688764e-002, 7.919519e-003, -6.108330e-002, -9.189885e-002, -7.024578e-002, -2.225864e-003, 3.040640e-002, 1.163364e-002, -2.700873e-003, -3.696153e-002, -2.373354e-002, 2.815390e-002, 8.141691e-003, 5.085671e-002, 6.681387e-002, 1.776832e-002, -2.960885e-002, 4.275733e-003, 2.245137e-003, -1.355731e-002, -2.471563e-002, -1.157802e-004, 3.257486e-002, 3.874198e-003, -1.797001e-003, 2.219633e-002, 1.263421e-002, -1.038998e-002, -4.250806e-002, -2.561850e-002, 2.465519e-002, 4.815799e-002, 9.222384e-003, -4.119035e-002, -2.081398e-002, 1.053824e-002, -3.541971e-002, 2.680022e-002, 4.284713e-002, 2.500500e-002, -1.049239e-002, 3.034166e-004, 5.098109e-003, 6.653009e-003, 6.685033e-003, 5.243995e-003, -2.791929e-003, -3.387029e-002, -2.927882e-002, -4.089712e-003, 1.066494e-002, 2.981166e-002, 4.843586e-003, -3.999339e-002, 1.482258e-002, 7.738226e-002, 1.953282e-002, -4.882659e-002, -2.087811e-002, -2.352363e-002, -7.353781e-002, 1.853475e-002, 1.172284e-002, 2.383810e-002, 3.461996e-002, 1.414592e-002, 1.852963e-002, 2.556415e-002, 1.651969e-002, 9.648788e-003, -1.640349e-002, -4.278069e-002, -3.735237e-002, -2.687558e-002, -9.446161e-003, 2.025794e-002, 1.369037e-002, 3.019455e-003, 4.989960e-002, 8.601358e-002, 1.341066e-002, -4.742032e-002, -1.508311e-002, -4.612896e-002, -8.009542e-002, 1.502329e-002, -2.951178e-002, -1.295537e-002, 3.644022e-002, -2.865076e-002, -5.013526e-002, -3.155847e-002, -2.220788e-003, 2.966407e-002, 3.644692e-002, 2.962169e-002, 2.522112e-002, -9.708498e-003, -3.919308e-002, -3.700312e-002, -2.057529e-002, 2.725984e-002, 7.061769e-002, 5.410950e-002, -1.634032e-002, -3.678120e-002, -5.223905e-003, -4.957611e-002, -5.862873e-002, 1.111972e-002, -3.637482e-002, -4.046661e-002, -3.156683e-003, -5.079933e-002, -6.169972e-002, -4.993539e-002, -1.270035e-002, 1.812744e-002, 3.002419e-002, 2.601567e-002, 1.034465e-002, -3.657785e-002, -7.908644e-002, -9.350178e-002, -4.762030e-002, 9.455760e-003, 3.415437e-002, 8.219280e-003, -2.898648e-002, -1.162224e-002, 4.373555e-003, -3.162144e-002, -2.892861e-002, 3.525040e-003, 2.685986e-003, 4.344175e-003, 4.893663e-003, -1.155276e-002, -2.378230e-002, -1.558787e-002, 1.479168e-002, 5.223914e-002, 7.567877e-002, 7.929874e-002, 5.577995e-002, 1.752752e-002, -9.020194e-003, -1.433290e-002, -1.557928e-003, 2.322610e-002, 2.371424e-002, -3.196674e-003, 1.864333e-003, 2.412466e-002, 2.911664e-002, 9.976667e-003, -3.116016e-002, -1.504879e-004, 3.318415e-002, 4.779262e-002, 6.114750e-003, -2.055449e-002, -3.725570e-002, -4.095292e-002, -2.027879e-002, 1.128846e-002, 2.703915e-002, 3.061162e-002, 2.689567e-002, 9.360903e-003, -1.706776e-002, -3.275377e-002, -2.135674e-002, -2.478245e-003, 1.213143e-002, 2.685036e-002, 4.117283e-002, 3.331315e-002, 4.650879e-002, 3.535391e-002, -6.351013e-002, -2.659459e-002, 1.243464e-002, 3.637021e-002, 1.515539e-002, -1.612715e-002, -3.665555e-002, -2.916226e-002, 2.609548e-003, 2.616994e-002, 3.811510e-002, 4.303889e-002, 3.617882e-002, 1.243533e-002, -2.717502e-002, -5.689207e-002, -5.386018e-002, -3.829545e-002, 3.579280e-003, 4.816025e-002, 2.468504e-002, -1.211389e-002, 3.702414e-002, 4.984835e-002, -4.085505e-002, -2.656555e-002, -7.693948e-003, -1.409511e-002, 2.670450e-002, 1.775122e-002, 1.828406e-003, 1.091407e-002, 3.586329e-002, 4.561478e-002, 4.839170e-002, 4.884504e-002, 4.606190e-002, 2.614627e-002, -2.596755e-003, -2.159916e-002, -3.643129e-002, -3.340037e-002, 1.708561e-002, 5.153397e-002, -4.388808e-003, -3.756224e-002, 3.808680e-002, 5.484513e-002, -9.031053e-003, -7.698135e-003, 1.132894e-002, -1.791992e-002, 9.355489e-003, 3.115999e-002, 2.790955e-002, 2.002872e-002, 1.146752e-002, -1.462818e-003, -1.231789e-002, -1.561753e-002, -3.897612e-003, 5.224132e-003, 8.405648e-003, 1.012117e-002, -1.727658e-002, -2.232777e-002, 1.916121e-002, 2.107911e-002, -1.952404e-002, -1.585677e-002, 3.010368e-002, 2.030610e-002, 6.233390e-003, -2.067611e-002, 2.721957e-002, 1.637155e-002, -3.534219e-002, -1.320159e-003, 1.069844e-002, -2.631760e-004, -2.460319e-002, -5.177877e-002, -7.071742e-002, -8.023815e-002, -5.335041e-002, -1.575720e-002, 1.432149e-002, 1.917909e-002, -4.967444e-003, -2.195827e-002, -2.380079e-002, -2.704126e-002, 8.303807e-003, 2.179709e-002, -1.271794e-002, -2.165807e-002, -3.366827e-002, -7.131286e-002, 1.703170e-002, 4.911847e-002},

© ISO/IEC 2004 — All rights reserved


Copyright International Organization for Standardization
Provided by IHS under license with ISO
No reproduction or networking permitted without license from IHS
Not for Resale

{4.660965e-002, 3.808852e-002, 3.257359e-002, 1.041411e-001, 1.357940e-001, 3.802469e-002, 1.356287e-001, 1.187569e-001,
3.612095e-003, 4.398964e-002, 7.850362e-002, -1.020174e-001, -7.525916e-002, 1.311813e-002, 3.320508e-002, 4.181853e-002, -
2.013648e-002, -9.677858e-002, -6.441248e-002, -2.478698e-002, -4.895880e-002, -3.820290e-002, -2.042159e-002, -1.925544e-002, -
7.249693e-002, -9.917126e-002, -4.602714e-002, 7.436800e-002, 4.543646e-002, -2.478906e-002, 9.211327e-002, 5.572793e-002, -
4.889526e-002, -4.628526e-002, 1.147916e-001, -3.739772e-002, -9.598663e-002, -1.830754e-002, 4.055561e-002, 7.369615e-002,
2.940303e-002, -7.172427e-002, -5.169205e-002, 4.763826e-003, -8.894189e-003, 1.092445e-004, -1.845047e-003, -2.458262e-004, -
1.136728e-001, -1.077630e-001, -1.969512e-002, 3.683824e-002, -6.154458e-002, -3.366992e-002, 3.105220e-002, 6.068402e-003, -
7.921684e-002, -9.297440e-002, 6.179503e-002, 8.488041e-002, 6.114619e-003, 7.275005e-003, 3.853504e-002, 6.001203e-002,
2.564079e-002, -4.478185e-002, -2.648707e-002, 3.198505e-002, 2.528474e-002, 2.832032e-002, 1.195154e-002, 5.318175e-003, -
6.794768e-002, -4.387319e-002, 2.666583e-003, -3.819474e-002, -7.861410e-002, -4.890515e-003, 5.968891e-003, 2.490639e-002, -
3.968861e-002, -5.460333e-002, -2.087610e-002, 2.131793e-002, 4.706782e-002, 7.232348e-002, 9.730732e-002, 1.040626e-001,
6.956853e-002, 2.128071e-002, 2.374102e-002, 3.604848e-002, 1.077815e-002, 2.703898e-002, 9.601856e-003, 1.507546e-003, -
4.287187e-002, -3.798695e-002, -4.396698e-002, -7.800291e-002, -1.371861e-004, -2.407379e-003, 3.878652e-003, 5.329904e-002,
3.567686e-002, 3.119258e-002, 2.050649e-002, -5.298311e-002, -1.018863e-001, -1.901102e-002, 6.924379e-002, 1.002304e-001,
7.912100e-002, 4.078014e-002, 1.456552e-002, 7.401790e-003, -2.443691e-002, -4.350539e-004, 1.676545e-003, -1.749163e-002, -
2.783268e-002, -1.446832e-002, -5.903432e-002, -4.232597e-002, 2.455966e-002, -7.047463e-002, -6.150153e-002, 2.567409e-002,
5.402194e-002, 4.029722e-002, 6.621039e-002, 4.325069e-002, -5.887063e-002, -1.236091e-001, -9.340671e-002, -4.425057e-002, -
1.912069e-002, -1.337609e-002, -8.024554e-003, -3.819855e-002, -6.135021e-002, -2.210607e-002, 3.864564e-003, -2.285961e-002,
6.550393e-002, 5.183059e-002, -2.834611e-002, 2.204854e-002, -2.515425e-002, -1.448780e-001, -6.972595e-002, -6.224500e-003,
1.622715e-002, -2.205064e-002, 3.560257e-003, 4.896889e-002, 6.215517e-002, 2.228900e-002, 4.356976e-003, 1.946287e-002,
2.436421e-002, 1.093882e-002, -1.613044e-002, -6.641409e-002, -8.277319e-002, -3.388023e-002, 1.243597e-002, -2.460583e-002,
9.235359e-002, 5.692944e-002, -1.041328e-003, 7.367502e-002, 9.532320e-003, -2.010338e-003, 4.873419e-002, 5.502439e-003,
2.733051e-002, 2.770275e-002, -1.679670e-002, -6.627082e-002, -1.254406e-002, 4.151403e-002, 2.561543e-002, 3.923380e-003, -
1.113189e-002, -2.655206e-002, -4.808866e-002, -8.041659e-002, -6.769330e-002, -1.746957e-002, 3.140211e-002, -6.919676e-003,
7.170785e-002, 1.425098e-002, -5.074727e-002, -2.844143e-002, -6.424334e-002, 1.526322e-002, 2.814087e-002, -3.266489e-002, -
5.636479e-002, -3.291082e-002, -1.917036e-002, -1.042421e-001, -8.460962e-002, -1.243986e-003, 3.579852e-002, 2.366344e-003, -
2.326792e-002, -2.859879e-002, -3.774172e-002, -5.643084e-002, -3.785865e-002, -3.899546e-003, 4.395487e-002, 7.387461e-003,
3.694628e-002, -2.932961e-002, -7.361234e-002, -3.062795e-002, 6.217101e-002, 8.955710e-002, 9.431184e-003, 1.993466e-003,
3.633725e-002, -1.129305e-002, -1.359598e-002, -2.275374e-002, -2.187907e-002, -1.639305e-002, 2.868313e-002, 2.693530e-002,
8.608456e-003, 2.981217e-003, -6.044629e-003, -2.360193e-002, 2.444930e-003, 8.897265e-003, 1.251280e-002, 1.597386e-002, -
1.058877e-002, -4.893625e-002, -3.994680e-002, 2.628409e-002, 6.695602e-002, 5.486459e-002, -7.113992e-003, -2.230689e-003,
1.333514e-002, -8.538929e-002, -5.737626e-002, 2.582677e-002, 3.487104e-002, -1.253840e-003, 2.670626e-004, 2.648961e-002,
3.860593e-002, 3.032492e-002, 1.937765e-002, 1.450759e-002, 3.656971e-002, -3.294138e-003, -1.203372e-002, 3.032043e-002, -
2.690134e-002, -4.698784e-002, -1.460874e-002, 3.398187e-002, 6.790210e-002, 5.565014e-002, -1.719153e-002, -3.618630e-002, -
2.706204e-002, -4.220019e-002, 4.117502e-003, 5.385184e-002, 6.130933e-002, 1.508554e-002, -2.189725e-002, -2.495632e-003,
4.348266e-002, 5.057973e-002, 3.621684e-002, 3.884266e-002, 5.148160e-002, -9.923950e-003, -2.676652e-002, 2.786772e-002, -
5.248186e-002, -4.831013e-002, -1.884299e-002, 2.177415e-002, 2.901772e-002, 1.597476e-002, -9.726919e-003, -5.467073e-002, -
4.778063e-002, 8.392009e-003, 4.094508e-002, 4.910590e-002, 3.700104e-002, -1.688129e-002, -5.310323e-002, -2.804795e-002,
3.309075e-002, 4.698890e-002, 4.769310e-002, 5.107727e-002, 4.454766e-002, -1.732882e-002, -2.191234e-002, 1.317952e-002, -
6.730745e-002, -3.302203e-002, 2.766914e-002, 6.337143e-002, 4.622818e-002, -3.933467e-003, -2.028005e-002, -6.029190e-002, -
4.488178e-002, 3.725588e-003, 4.190753e-002, 5.248287e-002, 2.792940e-002, -3.035556e-002, -6.543015e-002, -3.952367e-002,
1.923492e-002, 3.985878e-002, 4.216533e-002, 3.737359e-002, 3.338727e-002, -9.059124e-003, 2.298559e-004, 7.227310e-003, -
5.946011e-002, 4.983043e-003, 8.153108e-002, 1.099755e-001, 7.503448e-002, 2.134394e-002, -1.267252e-002, -4.073033e-002, -
4.528111e-002, -1.707027e-002, 2.614207e-002, 3.576116e-002, 2.023495e-002, -2.364684e-002, -4.282420e-002, -1.108564e-002,
1.969948e-002, 2.839898e-002, 2.565457e-002, 1.296436e-002, 1.574072e-002, -1.298554e-003, 2.599603e-002, 3.235344e-002, -
5.784463e-002, 2.241490e-003, 6.588483e-002, 7.182652e-002, 3.164803e-002, -1.980327e-002, -3.973017e-002, -2.805387e-002, -
2.857774e-002, -1.253762e-002, 1.868467e-002, 3.132531e-002, 1.650107e-002, -2.385844e-002, -6.438288e-002, -3.366127e-002,
4.728335e-003, 1.938048e-002, 8.810825e-003, -2.159907e-002, 7.219120e-003, -1.007647e-002, 2.289177e-002, 3.052466e-002, -


© ISO/IEC 2004 — All rights reserved

Copyright International Organization for Standardization
Provided by IHS under license with ISO
No reproduction or networking permitted without license from IHS
Not for Resale

7.366725e-003, 5.169247e-002, 6.961263e-002, 5.231137e-002, 2.235324e-002, 4.163414e-003, 1.137834e-002, 1.861148e-002, -5.912781e-003, -3.795716e-002, -5.188017e-002, -3.820998e-002, -1.729319e-004, 1.823777e-002, -4.449672e-002, -8.755083e-002, -4.320466e-002, 6.897324e-003, 4.283603e-003, -3.678701e-002, 1.336944e-004, -2.904309e-002, -6.058054e-004, -2.681842e-003, 3.002377e-003, 1.254293e-002, -5.246125e-003, -2.616300e-002, -2.627133e-002, -1.259852e-002, -1.884926e-003, -3.612084e-004, -2.574939e-002, -6.703852e-002, -8.920969e-002, -6.825183e-002, -6.633041e-003, 4.869982e-002, -4.676152e-003, -8.332389e-002, -5.415841e-002, 7.068736e-003, -1.227413e-003, -3.327079e-002, 6.716329e-003, -1.546934e-002, -1.607727e-002, -2.526089e-002, 3.318758e-002, 3.277716e-002, 5.746826e-003, -1.851246e-002, -2.790388e-002, -2.275838e-002, -1.327014e-002, 5.726457e-003, 1.304804e-002, 6.755226e-003, -2.618615e-003, 1.081666e-002, 4.592460e-002, 8.456360e-002, 1.348877e-002, -5.181757e-002, -1.969921e-002, 1.391009e-002, -1.296475e-002, 1.290321e-003, 3.366325e-002, 1.710536e-002, -1.099910e-002, -2.040793e-002, 3.918887e-002, 2.848612e-002, -1.174310e-002, -4.929789e-002, -5.969480e-002, -4.101517e-002, -1.033572e-002, 2.581996e-002, 3.737953e-002, 1.323742e-002, -1.045731e-002, 3.031448e-003, 4.562226e-002, 6.291766e-002, 1.513434e-003, -2.012523e-002, 3.673552e-003, 7.699864e-003, -9.457468e-003, 1.453756e-002, 2.374166e-002, 1.868667e-002, -1.637834e-003, 2.110725e-002, 2.030401e-002, 2.434749e-002, -2.452516e-003, -4.577026e-002, -6.238332e-002, -3.788904e-002, 7.673744e-003, 5.069045e-002, 5.249200e-002, 8.267432e-003, -3.299021e-002, -1.831414e-002, 2.357628e-002, 2.192508e-002, -8.383922e-004, -5.577967e-003, -1.252603e-002, -1.904960e-002, -1.522747e-002, -2.164688e-002, -3.326533e-002, -1.691616e-002, -5.246578e-003, 2.995150e-002, -1.760846e-002, 2.266483e-002, 2.259042e-002, -1.752669e-002, -2.563694e-002, 4.986360e-003, 4.840291e-002, 7.682555e-002, 5.969086e-002, 1.587219e-002, -1.207372e-002, 2.709504e-003, 2.119282e-002, 1.201224e-002, 8.768698e-003, -7.813617e-003, -3.231108e-002, -1.527469e-002, -3.308993e-003, -3.977916e-002, -4.306320e-002, -3.169781e-002, 6.343572e-003, 1.623997e-002, -5.075718e-002, 6.726629e-004, 1.305252e-002, 1.679750e-004, -1.200935e-002, 5.203718e-003, 2.604533e-002, 3.384119e-002, 7.664847e-003, -1.432626e-002, -7.074453e-003, 1.358906e-002, 1.828634e-002, 1.451252e-002, 2.404292e-002, 6.891769e-003, -2.578973e-002, 9.548141e-003, 2.879469e-002, 8.878682e-003, -1.008678e-003, -4.791207e-002, -8.626402e-004, -1.355897e-002, -7.271884e-002, -2.184850e-002, -1.259331e-003, -1.322765e-003, -1.632172e-002, -6.641699e-003, -1.727694e-003, -2.126150e-002, -4.287366e-002, -4.026761e-002, -1.646319e-002, -1.445017e-004, 1.303554e-002, 2.140729e-002, 3.507126e-002, 2.518644e-003, -1.697091e-002, 2.977328e-002, 5.233787e-002, 6.173552e-002, 2.802835e-002, -5.391160e-002, -6.180591e-004, -5.713097e-003},
{-5.620949e-002, -8.289753e-002, -7.372866e-002, -4.791011e-002, 1.440713e-001, 1.274444e-001, -2.310547e-002, -4.713635e-002, 5.025125e-003, 1.157240e-001, 1.020255e-001, 8.409677e-003, -5.441360e-002, -5.233652e-002, 1.459853e-002, 3.470728e-002, -3.620576e-002, -9.980788e-002, -5.339087e-002, -6.875956e-003, 4.411564e-004, 3.504008e-002, 3.201052e-002, -2.536301e-002, 6.001424e-002, 4.024703e-002, -1.573782e-002, -3.934760e-002, 8.930080e-002, 2.964155e-002, -6.689991e-003, 7.422409e-003, 3.840448e-002, 5.400660e-002, 5.632371e-002, 9.257628e-003, 7.988530e-003, 4.378964e-002, 8.459717e-002, 8.536653e-002, 2.516777e-002, -6.189150e-002, -4.736980e-002, 5.808251e-003, 2.190095e-002, 3.013432e-002, -2.412385e-003, -1.538038e-002, 7.248896e-002, 3.722956e-002, -5.089952e-002, -6.967072e-002, -2.703437e-002, -1.592557e-002, 4.282568e-003, 2.043532e-002, 3.236878e-002, -8.968388e-003, -4.298560e-002, -4.546460e-002, -1.776646e-002, 1.347879e-002, 3.923110e-002, 3.879054e-002, 1.177286e-003, -4.794820e-002, -2.827969e-002, 2.237313e-002, 3.573843e-002, 5.671311e-003, -7.311345e-003, 2.353700e-002, 4.110794e-002, -2.925379e-003, -8.736895e-002, -9.680695e-002, -7.387239e-002, 5.990520e-003, 2.552025e-003, 1.592692e-002, 3.744144e-002, -3.009818e-002, -9.736906e-002, -8.867611e-002, -7.485052e-002, -4.025187e-002, -1.000895e-002, -3.162846e-003, -1.797494e-002, -3.219265e-002, -1.767674e-003, 4.431611e-002, 1.569936e-002, -1.134078e-002, -1.719287e-002, 5.735834e-002, 3.600929e-002, -5.496902e-003, -7.890361e-002, -1.113683e-001, -2.776826e-002, 2.717081e-002, -4.931673e-003, 6.206287e-003, 4.687043e-002, -7.970713e-003, -1.148518e-001, -7.100124e-002, -2.570884e-002, -2.358038e-002, -1.626362e-002, -2.530221e-003, 1.175715e-002, 3.225288e-002, 6.709214e-002, 3.426705e-002, -1.831210e-002, -2.091168e-002, -1.478571e-002, 5.392322e-002, 6.097062e-002, 7.790268e-003, -8.040168e-002, -7.542506e-002, 5.165240e-002, 3.145020e-002, -2.732490e-002, 8.120047e-003, 3.958756e-002, 2.946263e-002, -2.730461e-002, -7.205908e-002, -1.453826e-002, 3.418010e-002, 5.409989e-002, 6.274000e-002, 6.881250e-002, 6.587502e-002, 4.361843e-002, -7.388854e-003, -5.057053e-002, -1.822075e-002, -1.128247e-002, 1.885898e-002, 3.852652e-002, 8.418225e-003, -4.040105e-002, 1.667957e-002, 1.164854e-001, 3.462435e-002, -9.194827e-003, -6.964012e-003, -3.277846e-002, -6.287765e-003, 7.394607e-002, 3.651657e-002, -1.638788e-002, -1.101347e-002, -8.062874e-003, -5.579798e-003, -4.409193e-003, -6.045189e-003, -1.299751e-002, -4.771912e-002, -4.919942e-002, -2.580124e-003, -4.675563e-003, -3.470436e-003, 5.694111e-002, 6.245830e-002, 1.183668e-002, 2.734151e-002, 1.057478e-001, 5.438469e-003, -2.779544e-002, -4.395233e-002, -9.490269e-002, -8.712293e-002, 4.279121e-002, 1.075458e-001, 2.657265e-002, -2.149312e-002, -8.276537e-003, -1.283188e-002, -1.610061e-002, -5.321693e-003, -3.597474e-003, -3.294629e-002, -3.036368e-002, 1.377782e-002, -1.816029e-002, -2.334386e-002,

© ISO/IEC 2004 — All rights reserved


Copyright International Organization for Standardization
Provided by IHS under license with ISO
No reproduction or networking permitted without license from IHS
Not for Resale

9.763565e-002, 1.027342e-001, -1.059677e-002, -3.418994e-002, 5.502394e-002, -1.078121e-002, -4.841492e-002, -3.265257e-002, 3.762944e-002, 5.222610e-002, -5.723834e-003, 5.385296e-002, -1.616945e-004, -4.379862e-002, -1.915457e-002, 1.207831e-002, 2.611107e-002, 3.656707e-002, 2.689757e-002, -8.758383e-003, -9.892260e-003, 1.525469e-002, -2.596885e-002, -3.046428e-002, 1.034158e-001, 7.060490e-002, -3.446333e-002, -8.831809e-002, -6.652234e-002, -4.692549e-002, -3.453807e-002, -3.523208e-002, 1.768124e-002, 1.221388e-002, -3.528983e-002, 1.056731e-002, -1.256541e-002, -6.609567e-002, -5.616302e-002, -1.497480e-002, 2.293683e-002, 3.516596e-002, 1.956267e-002, -9.283155e-003, -5.939638e-003, -1.249850e-002, -3.273595e-002, -3.683870e-002, 4.501339e-002, 3.756248e-002, 4.377189e-002, 1.941399e-002, 6.673261e-003, -3.276960e-002, -1.907597e-002, 5.810535e-002, 1.212808e-001, 3.780146e-002, -2.715439e-002, -1.800693e-002, -7.197554e-003, -3.862565e-002, -6.734351e-002, -3.827139e-002, -2.894639e-003, 1.486585e-002, -2.127374e-003, -1.601604e-002, -9.863079e-003, -5.880466e-002, -2.972851e-002, -3.454311e-002, -2.363788e-002, 1.185354e-002, 5.840364e-002, 4.197416e-002, -1.434752e-002, -7.663847e-002, -7.883395e-002, 2.614731e-002, 9.281686e-002, 3.879263e-002, -2.211695e-002, -3.194455e-002, -7.148640e-003, 3.580825e-003, -2.868756e-002, -3.007065e-002, -6.177511e-003, -5.018940e-003, -1.597196e-002, -2.223573e-002, -2.481661e-002, -7.237220e-002, 2.938337e-002, 8.555967e-003, -9.766593e-002, -5.005638e-002, 1.646298e-002, 2.647329e-002, 4.082340e-003, -3.035502e-002, -2.328644e-002, 4.510653e-002, 7.273204e-002, 5.410224e-002, 9.804645e-003, -8.218154e-003, 1.084033e-002, 4.089492e-002, 2.411520e-002, -7.540984e-003, -1.314814e-002, -3.195268e-002, -2.493829e-002, -1.922210e-002, -3.868132e-002, -4.693233e-002, 8.715021e-002, 4.280913e-002, -1.582881e-001, -8.408766e-002, -1.342749e-003, 3.931297e-002, 3.151697e-002, 5.422905e-003, 2.493325e-002, 3.719691e-002, 1.414995e-002, -3.313421e-003, -4.548431e-002, -5.047826e-002, -1.428059e-002, 3.412813e-002, 4.576712e-002, 4.722924e-003, -2.603198e-002, -4.359219e-002, -1.401436e-002, 3.173714e-003, -2.321134e-002, -9.545694e-005, 7.862534e-002, 2.984265e-002, -1.309481e-001, -5.036057e-002, 1.947928e-003, 1.160452e-002, -5.849491e-004, -9.284482e-003, 1.040210e-002, 1.904088e-002, -1.002322e-002, -1.897696e-002, -4.274474e-002, -4.673439e-002, -3.856040e-002, -5.826706e-003, 1.198216e-002, -1.096032e-002, -4.365284e-002, -2.625021e-002, 1.313554e-002, 2.082745e-002, 5.907771e-003, 3.443627e-002, -7.302596e-003, -1.654873e-002, -6.614227e-002, -6.298759e-003, 4.417614e-002, 4.758822e-002, 3.622486e-002, 1.114522e-002, -9.884590e-003, -9.380045e-005, 2.322949e-003, -9.655339e-003, -1.327630e-002, 2.638167e-002, 6.359145e-002, 5.007864e-002, 2.169459e-002, 7.842517e-004, -2.467914e-002, 1.166285e-002, 4.274310e-002, 3.267896e-002, 3.253467e-002, 3.966939e-002, -4.470878e-002, -5.799258e-003, -5.911356e-002, -3.925492e-002, 1.739210e-002, 3.928671e-002, 2.510264e-002, 3.893905e-003, -1.436324e-002, 2.530799e-003, 2.091046e-002, 2.518942e-002, 2.497398e-002, 2.204542e-002, 1.268250e-002, 1.235860e-002, 3.385484e-002, 3.062653e-002, 1.968561e-002, 4.058501e-002, 5.447066e-002, 2.214215e-002, 4.020706e-002, 2.211512e-002, 5.735426e-003, 5.319078e-002, -1.206287e-002, 2.464729e-003, 2.361403e-002, 1.495728e-002, -9.201015e-003, -3.638822e-002, -3.399080e-002, -1.403247e-003, 2.569331e-002, 3.843596e-002, 2.831386e-002, 3.937569e-003, -1.890646e-002, -1.039550e-002, 1.628203e-002, 3.641658e-002, 3.431036e-002, 4.089205e-002, 3.668981e-002, 1.244152e-002, -1.033168e-002, -2.460249e-002, 6.252369e-002, 8.500327e-002, 5.964425e-002, 4.822507e-002, 3.384610e-002, 2.045092e-003, -2.867635e-002, -3.567799e-002, -1.639368e-002, -8.397419e-003, -3.779112e-003, -1.022150e-002, -2.020991e-002, -5.350856e-003, 2.368982e-002, 4.725085e-002, 4.217302e-002, 4.001161e-002, 2.796279e-002, 1.322903e-002, 1.318932e-002, 4.793553e-003, -8.061180e-002, -3.898136e-002, 4.009155e-002, -1.161228e-002, 5.692869e-002, 2.827174e-002, 6.898549e-003, -2.850032e-002, -5.858226e-002, -5.075804e-002, -3.035106e-002, -2.874955e-002, -4.155559e-002, -5.050237e-002, -4.461191e-002, -7.959588e-003, 4.593322e-002, 7.457130e-002, 4.773267e-002, 1.823683e-002, -1.408993e-002, -2.316537e-002, 7.798607e-003, 1.335783e-002, -7.100047e-002, -3.494817e-003, -8.000908e-003, -1.007239e-001, 2.134604e-002, 9.382146e-004, -1.808760e-002, -2.268932e-002, -1.365362e-002, 1.528833e-002, 3.026338e-002, 1.729528e-002, -1.446952e-002, -3.073412e-002, -2.968271e-002, 4.249959e-003, 4.270219e-002, 4.707547e-002, 2.216497e-002, -2.556987e-002, -5.419732e-002, -1.881261e-002, 1.652663e-002, 4.592937e-002, -3.816307e-002, 2.558508e-002, -5.983608e-003, -8.265620e-002, -1.193581e-002, -3.601954e-002, -4.109325e-002, -1.480569e-002, 1.241742e-002, 3.040702e-002, 2.378553e-002, -7.541683e-003, -3.862399e-002, -5.461834e-002, -4.246530e-002, -2.022109e-002, 1.731922e-003, 1.955126e-003, -5.654174e-003, -5.659355e-002, -4.631793e-002, -1.803016e-003, -1.064140e-002, 5.726197e-002, -5.905949e-002, -2.056947e-002, 8.200441e-003, -1.929602e-002, 1.038023e-002, -2.416578e-002, -3.101262e-002, -2.173166e-003, 2.835899e-002, 2.416873e-002, -3.546234e-003, -4.310458e-002, -6.165987e-002, -6.256803e-002, -5.082867e-002, -3.792319e-002, -1.894662e-002, -9.741612e-003, -3.207640e-003, -1.914784e-002, 1.027503e-002, 4.308549e-003, -4.368572e-002, 3.486433e-002, -7.979594e-002, -4.693165e-002, -3.591109e-004, 1.362029e-002, 6.880996e-002, 4.008097e-002, 1.033553e-002, 2.343178e-002, 5.297525e-002, 4.316032e-002, 2.119862e-002, -1.524655e-002, -2.770560e-002, -2.696940e-002, -1.802013e-002, -1.341430e-002, 8.597517e-003, 2.963865e-002, 4.831104e-002, 6.571340e-002, 7.912828e-002, 4.093104e-002, -9.938748e-003, 5.039765e-002, 8.528803e-003, 3.651648e-002, 4.148850e-002, 2.920869e-002},


© ISO/IEC 2004 — All rights reserved

Copyright International Organization for Standardization
Provided by IHS under license with ISO
No reproduction or networking permitted without license from IHS
Not for Resale

{-4.977267e-002, -4.656871e-002, -4.972033e-002, -9.694344e-002, -6.486929e-002, 9.151747e-002, 6.674881e-002, 1.700735e-002, -1.582539e-002, 6.283545e-002, 9.254621e-002, -5.647993e-002, -6.460375e-002, -3.131716e-002, -2.739207e-004, 2.802507e-002, 5.587980e-002, 9.344521e-002, 1.725262e-001, 1.434814e-001, -2.470648e-002, -2.785354e-002, 2.009142e-002, -9.543335e-003, 3.363179e-002, 7.027179e-002, 6.853959e-002, -2.242655e-003, 3.288669e-002, 7.383792e-002, 1.421565e-002, -7.119189e-003, -4.118979e-002, -3.235762e-003, 9.050780e-002, -1.724915e-002, -2.711354e-002, -2.177373e-002, -3.866369e-002, -6.275854e-002, -9.095911e-002, -1.238603e-001, -6.932774e-002, -4.580831e-003, -6.729649e-002, -1.305628e-002, 2.397962e-002, 3.507112e-003, 1.300756e-001, 1.362167e-001, 8.262219e-002, 2.488567e-002, 3.445925e-002, 7.331276e-003, -1.392084e-002, -3.720590e-003, -2.882898e-002, -6.134795e-002, -1.088724e-002, -1.597288e-002, -1.792223e-002, 3.176883e-002, 3.845118e-002, -1.338321e-003, -6.631287e-002, -1.351811e-001, -1.119867e-001, -3.002061e-002, -2.147430e-002, 2.960948e-002, 3.270973e-002, 7.328400e-003, 7.893090e-002, 4.392548e-002, -1.659389e-002, -2.653563e-002, -2.645282e-002, -3.587927e-002, -1.855617e-002, 1.307794e-003, 1.035251e-002, -2.417082e-002, -7.487565e-002, -9.493655e-002, -7.079092e-002, -5.918677e-003, 4.182536e-002, 3.268748e-002, -1.869646e-002, -7.579432e-002, -6.080883e-002, 1.830987e-002, 4.106548e-002, 3.547384e-002, 4.357476e-002, 1.765052e-003, -4.459244e-002, -8.771634e-002, -8.103894e-002, -5.564171e-002, -7.578987e-002, -3.329695e-002, -3.677378e-003, -3.458614e-003, 4.829708e-002, 5.653565e-002, -3.714921e-002, -8.121624e-002, -1.063219e-001, -4.823931e-002, 1.383294e-002, 4.864299e-002, 4.610244e-002, 1.596704e-002, 4.175047e-002, 8.330265e-002, 4.827860e-002, 1.610770e-002, 3.886022e-002, 5.929128e-003, -8.227857e-002, -5.845187e-002, 1.198604e-002, -3.643316e-002, -3.272935e-002, 1.374841e-002, -1.345206e-002, -5.224910e-002, 2.234895e-002, 6.513666e-002, -1.806107e-003, 1.532968e-003, -2.283512e-003, 1.384608e-003, 3.027956e-002, 6.850188e-002, 9.189464e-002, 8.739596e-002, 8.526139e-002, 6.311640e-002, 1.516506e-002, -1.470501e-002, 2.500986e-002, 2.884671e-002, -4.990244e-002, 1.988648e-002, 8.679912e-002, 7.626911e-003, 3.237420e-002, 7.691556e-003, -2.832553e-002, -4.125858e-002, -1.616501e-002, -3.024567e-002, -3.552829e-002, -8.018679e-003, 5.207810e-002, 5.532930e-002, 6.167052e-002, 8.176716e-002, 7.699139e-002, 4.670446e-002, 2.224606e-002, 2.035057e-003, -3.216272e-002, -4.195979e-002, -9.624464e-005, 3.100028e-002, -5.558141e-002, 4.536720e-002, 4.372517e-002, 1.228623e-003, 2.982974e-002, -3.031884e-002, 2.706556e-002, 5.593892e-002, -1.842762e-004, -2.321639e-002, 1.954263e-002, 5.641864e-003, 1.915600e-002, 4.238729e-002, 1.226520e-002, -1.332746e-002, -4.204344e-002, -7.419112e-002, -7.306732e-002, -5.456050e-002, -5.844738e-002, -5.827824e-002, -3.528843e-002, 1.285244e-002, -5.725589e-003, 2.726875e-002, -2.211562e-002, -6.023976e-003, -7.368910e-003, -1.791792e-002, 4.031893e-002, 2.938450e-002, 3.741426e-003, 4.181158e-002, 7.446772e-002, 2.233096e-002, -7.639050e-003, 4.281175e-002, 4.851266e-002, -1.207113e-002, -7.252926e-002, -1.015685e-001, -8.016819e-002, -4.810303e-002, -4.330292e-002, -4.427270e-002, -5.483130e-002, -2.834415e-002, 1.580371e-002, -1.084580e-002, -1.173826e-002, 8.286872e-002, 7.665058e-002, -1.035701e-002, -5.348271e-002, -9.088710e-002, -3.977559e-003, 1.791255e-002, -5.537392e-002, -7.369317e-002, -6.067235e-002, -7.095014e-003, 7.906970e-002, 6.001740e-002, -1.437492e-002, -5.030215e-002, -3.278724e-002, -1.569537e-002, -1.253690e-002, -1.467520e-002, -5.532939e-002, -5.325755e-002, -7.823787e-005, -4.066291e-002, -9.152525e-003, 5.823586e-002, 4.424856e-002, 9.229444e-003, -1.548410e-002, -8.049930e-002, 3.034696e-004, 1.945714e-002, -4.780768e-002, -5.103170e-002, -3.277648e-002, -3.023993e-002, 2.396474e-002, 8.238801e-002, 4.812135e-002, 1.205803e-002, 2.049935e-002, 1.867191e-002, 1.952409e-002, 1.730551e-002, -6.752985e-003, 3.951549e-003, -5.406163e-003, -4.424107e-002, -4.160659e-002, 2.148233e-003, 4.076014e-002, 6.607568e-002, 3.986285e-002, -6.348185e-002, 6.090599e-003, 5.374957e-002, 2.368988e-002, 2.429267e-002, 2.665795e-002, 6.807302e-003, -1.361404e-002, 2.774835e-002, 5.681793e-002, 4.824967e-002, 4.666883e-002, 2.879867e-002, 2.908787e-002, 4.654064e-002, 6.218175e-002, 4.843206e-002, 7.591046e-003, -5.317438e-003, -7.939120e-003, 1.910622e-002, 4.410470e-002, 3.319898e-002, -9.849816e-003, -1.009362e-001, -4.918889e-002, -6.673289e-003, 1.232702e-002, 4.010018e-002, 4.869474e-002, 2.748298e-002, -2.218468e-002, -4.151082e-002, 7.743677e-003, 4.644377e-002, 5.430710e-002, 1.670143e-002, 2.397505e-002, 4.800646e-002, 5.546938e-002, 5.090468e-003, 1.610994e-002, 2.903908e-002, 4.453684e-002, 5.005481e-002, 2.760213e-002, 1.555455e-002, 6.743992e-003, -3.517186e-002, 9.562024e-003, 5.115095e-002, 5.908788e-002, 4.624348e-002, 1.223173e-002, -1.041915e-002, -2.581041e-002, -5.309228e-002, -4.140856e-002, 2.172850e-002, 3.209709e-002, -2.975567e-003, -9.309857e-003, 9.498739e-003, -1.723501e-002, -5.034887e-002, 1.195173e-002, -2.799845e-002, -3.703667e-002, -3.353762e-002, -4.609942e-002, -3.243004e-002, 1.121822e-002, 2.287733e-002, 2.756772e-002, 2.331523e-002, 3.027449e-003, -2.295123e-002, -5.295256e-002, -4.803710e-002, -1.262238e-002, -2.156796e-002, -3.953753e-002, -6.977676e-003, -1.070342e-003, -2.951305e-002, -5.047590e-002, -2.912450e-002, -4.691933e-002, -4.998809e-002, 4.055000e-002, -6.827485e-003, -7.621454e-002, -8.019815e-002, -5.548660e-002, -2.365366e-002, 2.163386e-002, 2.905925e-002, 3.398775e-002, 1.445825e-002, -2.283486e-002, -4.607311e-002, -3.431194e-002, -5.307720e-003, 2.215126e-002, 7.189521e-003, -2.529220e-002, -2.844668e-002, -2.754835e-002, -3.643011e-002, -5.821696e-002, -2.610757e-002, -1.195567e-002, 2.156719e-002,

© ISO/IEC 2004 — All rights reserved


--`,,```,,,,````-`-`,,`,,`,`,,`---

Copyright International Organization for Standardization
Provided by IHS under license with ISO
No reproduction or networking permitted without license from IHS
Not for Resale

4.841481e-002, 1.521787e-002, -4.216482e-002, -6.416408e-002, -5.300870e-002, -4.292402e-002, -2.742057e-002, -2.193305e-002, -6.399145e-003, 2.786691e-002, 4.310443e-002, 4.199200e-002, 2.621356e-002, 1.251010e-002, 2.938645e-003, -1.182476e-003, -1.943756e-002, -2.490194e-002, -1.860322e-002, 9.725068e-004, -3.196983e-002, -1.856446e-002, 2.001147e-002, 5.473264e-002, -7.439048e-003, 1.451219e-002, 1.228906e-002, -7.973963e-003, 1.347485e-002, 3.144249e-002, 2.563055e-002, 5.239073e-003, -5.652428e-003, -1.688159e-002, -1.863044e-002, 4.046590e-003, 3.129069e-002, 2.507530e-002, -4.082515e-003, -1.858718e-002, -3.929555e-002, -2.685693e-002, 1.563698e-002, 2.638528e-002, 7.970346e-003, -1.941059e-002, 1.911422e-002, -1.269610e-002, -7.137465e-002, -4.228397e-002, -1.418188e-002, -5.841515e-003, 2.242195e-002, 3.553511e-002, 4.116598e-002, 3.800996e-002, 2.778718e-002, 8.766715e-003, -1.547748e-002, -3.193141e-002, -1.207914e-002, 1.558503e-002, 9.080643e-003, -3.058473e-002, -4.817501e-002, -3.104170e-003, 4.597736e-002, 4.640795e-002, 4.687265e-002, -1.029960e-002, 3.968109e-002, -6.903365e-002, -5.627951e-002, -3.719856e-002, -1.894396e-002, -1.050195e-002, -6.001921e-003, -9.283105e-003, 6.313037e-003, 2.574980e-002, 3.594472e-002, 2.621045e-002, 1.236257e-002, 2.164235e-003, 1.559884e-002, 3.527559e-002, 2.010801e-002, -2.230909e-002, -3.153276e-002, 9.801422e-003, 3.045945e-002, 4.573542e-002, 3.478699e-002, -1.164316e-003, 3.951319e-002, -4.324050e-002, 1.177658e-002, 2.416202e-002, 2.768481e-002, 2.062119e-002, -3.843263e-003, -2.460282e-002, -2.507834e-002, -2.375823e-002, -1.986693e-002, -1.674553e-002, -1.853903e-002, -3.894775e-003, 2.261292e-002, 2.511439e-002, 2.000471e-002, -5.190855e-003, -2.594572e-002, -1.033022e-002, -5.140774e-003, 2.074222e-002, 2.124299e-003, -1.694478e-002, 1.844519e-002, -7.237131e-003, 6.221090e-002, 7.903327e-002, 6.972179e-002, 5.737705e-002, 2.249266e-002, -3.317187e-003, -1.545899e-002, -1.680170e-002, -1.142487e-002, -1.013075e-002, -3.814747e-003, 8.701980e-003, 2.064420e-002, 2.237820e-002, 2.132293e-002, -2.541632e-005, -2.180203e-002, -3.912613e-002, -4.547900e-002, -7.559698e-003, -1.290547e-002, -3.614065e-002, -3.225943e-002, 6.071562e-003, 3.504574e-002, 5.117292e-002, 3.053679e-002, 1.939817e-002, -2.864149e-003, -2.335293e-002, -3.631192e-002, -3.128620e-002, -1.072240e-002, 5.453016e-003, 1.159020e-002, 2.338877e-003, 3.460256e-003, 8.322755e-003, 1.816894e-002, 2.464065e-002, -8.291231e-003, -3.186793e-002, -2.684580e-002, 6.097070e-003, -6.602063e-003, -1.016443e-002, -3.003407e-002, 8.385723e-004, -1.067432e-002, -1.830951e-002, -4.171473e-002, -4.939362e-002, -5.894588e-002, -6.637915e-002, -6.279425e-002, -4.797555e-002, -7.685506e-003, 2.467295e-002, 2.405234e-002, 1.614923e-003, 1.017551e-002, 5.139763e-003, 2.481686e-002, 5.175433e-002, 2.312806e-002, 8.898691e-003, 3.087683e-002, 3.387960e-002, 1.969089e-002, 3.692490e-002, 3.436787e-002, 4.048560e-002},
{6.041592e-002, 9.637411e-002, 2.304979e-002, -5.217204e-002, 5.085316e-002, -4.815335e-002, 3.012061e-002, 1.996454e-002, -1.060662e-002, -1.043418e-001, -7.724048e-002, 8.111715e-002, 7.747542e-002, 4.530629e-002, -4.313319e-002, -8.471285e-002, -8.621920e-003, 7.797241e-002, 5.781942e-002, 2.148640e-002, 3.823485e-002, -8.206433e-002, 1.152282e-002, 9.128471e-002, 9.619171e-002, 7.277946e-002, -4.478246e-002, -8.094063e-002, 2.149523e-003, -6.725379e-002, 2.357011e-002, -6.260753e-003, 2.956791e-004, -2.741511e-002, -8.943296e-002, 2.570869e-002, 6.577106e-002, 4.682385e-002, 1.658063e-002, -1.364690e-002, -9.055517e-003, 1.113653e-002, -1.832821e-002, -3.335314e-002, 3.646987e-003, -7.065270e-002, 1.665506e-003, 4.126331e-002, 3.448506e-002, -1.432538e-002, -8.386563e-002, -2.316633e-002, -4.598166e-002, -4.577989e-002, 1.123111e-002, -3.858201e-002, -2.239264e-002, 4.239952e-002, -2.553609e-002, -3.226353e-002, -1.580737e-002, -1.287183e-002, -1.381026e-002, -3.239945e-002, -4.331411e-002, -3.486095e-002, -5.675220e-002, -6.166679e-002, -1.571280e-003, -2.765341e-002, -1.048780e-002, 2.741358e-002, 1.996432e-002, 6.473240e-003, 2.328416e-002, 4.131626e-002, -6.225306e-002, -9.899177e-003, 5.882737e-003, -5.352804e-002, -5.296986e-002, 5.964960e-002, 5.835929e-002, 1.131227e-002, -1.540800e-002, -4.818301e-002, -6.056633e-002, -6.321869e-002, -6.708057e-002, -3.614595e-002, -2.454334e-002, -2.267761e-002, 3.148306e-002, 1.334859e-002, -3.545213e-002, -7.114266e-003, 9.221312e-002, 9.011991e-002, 6.237325e-002, -3.268020e-003, -1.328496e-002, 2.647304e-002, 2.086966e-002, -3.451482e-002, -5.117575e-002, 1.636526e-002, 7.216433e-002, 7.223376e-002, 8.161922e-002, 3.611837e-002, -9.168503e-004, -1.870648e-002, -1.927873e-002, 2.046214e-002, 5.139544e-002, 2.592856e-002, 4.293500e-002, 2.188286e-002, -4.704207e-002, -6.514371e-002, 5.879821e-002, -1.383862e-002, -2.602187e-002, 4.829180e-002, 3.096607e-002, 2.787284e-002, 1.694349e-002, -1.899936e-003, 3.496563e-003, -1.739393e-002, -1.254856e-002, 6.271788e-002, 6.419212e-002, 6.411910e-002, 5.690391e-002, 4.300854e-002, 4.108193e-002, 5.819422e-002, 5.471909e-002, 1.709437e-002, 8.027085e-003, 1.348821e-002, -2.937865e-002, -8.187044e-002, -7.965832e-002, -6.987126e-002, 4.893076e-002, 5.756312e-002, -1.583465e-002, 1.708818e-002, 2.152891e-002, 3.416352e-002, 7.855665e-002, 1.505210e-003, -1.252159e-001, -3.039771e-002, 5.062050e-002, -9.338299e-003, -5.375373e-002, -6.406835e-002, -3.608392e-002, -1.393316e-003, -4.559724e-003, -2.961841e-002, -9.616369e-003, 2.420502e-002, 9.924103e-003, -5.925320e-002, -4.626595e-002, 3.330905e-002, 8.068075e-002, -3.810777e-002, -2.342329e-002, 8.368612e-002, 5.712867e-002, 4.680212e-003, 2.342707e-002, -3.241075e-002, -1.194928e-001, -7.082851e-002, 6.241551e-002, 4.767032e-002, -2.411250e-002, -5.934307e-002, -3.995422e-002, -4.309841e-003, -1.081602e-002, -3.871048e-002, -4.532147e-003, 3.569746e-002, 6.132859e-002, -5.195699e-003,


© ISO/IEC 2004 — All rights reserved

Copyright International Organization for Standardization
Provided by IHS under license with ISO
No reproduction or networking permitted without license from IHS
Not for Resale

1.970797e-002, 5.924958e-002, 8.296229e-003, -6.262467e-002, -1.173806e-002, 2.609397e-002, -1.106889e-003, -3.625343e-002, -2.035740e-002, -4.172115e-002, -5.528711e-003, 5.066909e-002, 3.945577e-002, 2.103996e-002, -1.302006e-002, -4.009017e-002, -1.969668e-002, 1.802533e-003, -1.858930e-002, -4.358129e-002, -1.692659e-002, 3.123861e-002, 9.343230e-002, 4.571459e-004, 6.142658e-003, -1.087624e-002, -3.530264e-002, -1.737145e-002, -8.423883e-003, -6.585137e-002, -4.669678e-002, 8.689211e-003, 2.224010e-002, -3.352956e-004, 5.728673e-002, 1.327502e-001, 3.845531e-002, -4.390876e-002, -4.692310e-002, -2.531565e-002, 6.248983e-003, 1.364537e-002, -2.140463e-002, -4.837444e-002, -3.753069e-002, 3.828490e-003, 7.998646e-002, -4.655097e-002, -4.998515e-002, -3.731457e-002, 1.265053e-002, 2.552226e-002, 9.551084e-004, -1.398945e-002, 2.374026e-002, 4.426015e-002, 4.369892e-002, -8.698318e-003, -2.472616e-002, 4.182072e-002, 2.500459e-002, -6.228283e-002, -9.363283e-002, -2.452329e-002, 3.939101e-002, 3.724549e-002, -4.505632e-003, -3.722752e-002, -5.761685e-002, -3.821433e-002, 1.916546e-002, -6.219226e-002, -3.768606e-002, 1.540948e-002, 6.936708e-002, 3.591291e-002, -1.472955e-002, -1.925304e-002, 3.412451e-003, -1.116629e-002, 1.252331e-002, 5.067607e-003, -8.234071e-003, 5.308059e-003, 2.450193e-002, -9.234190e-003, -6.806386e-002, -1.121570e-002, 6.477634e-002, 6.379645e-002, 2.476998e-002, -2.023890e-002, -5.400007e-002, -4.793512e-002, -6.808032e-003, -1.207904e-002, 6.378682e-003, 5.997294e-002, 8.545213e-002, 4.210484e-002, -3.440080e-002, -6.644371e-002, -6.238838e-002, -6.273611e-002, 7.399021e-003, 2.088850e-002, -6.629002e-003, -1.302633e-002, -2.218369e-003, 1.091152e-002, 2.027665e-003, 1.538931e-002, 6.705067e-002, 8.159797e-002, 5.422682e-002, 4.395411e-003, -4.368915e-002, -4.208570e-002, 3.537892e-002, 5.387884e-002, 1.122692e-002, 5.611617e-002, 7.569954e-002, 3.370663e-002, -2.300071e-002, -2.977309e-002, -6.368410e-003, 5.312339e-003, 4.967081e-002, 5.800260e-002, 1.281475e-002, -2.940299e-002, -5.072555e-002, -2.092954e-002, 4.792868e-003, 8.297785e-003, 3.686594e-002, 7.720092e-002, 6.729464e-002, 2.598013e-002, -7.778854e-003, -1.694834e-002, 4.191132e-002, 2.461397e-002, -2.057216e-002, 8.252230e-003, -4.624029e-003, -3.386863e-002, -5.824031e-002, -4.866987e-002, 9.256905e-004, 3.446380e-002, 4.088992e-002, 4.198960e-002, 1.807815e-002, -1.410609e-002, -3.259469e-002, -1.752740e-002, -3.557017e-002, -8.387904e-002, -6.037010e-002, 1.966356e-002, 5.190422e-002, 4.209612e-002, 3.159326e-002, -4.428732e-003, 7.203520e-003, -3.089522e-002, -6.078951e-002, 2.107733e-003, 4.153053e-002, 1.039372e-002, -3.933833e-002, -5.507605e-002, -2.203659e-002, 2.606978e-002, 2.094954e-002, 2.010817e-003, -1.385105e-002, -1.316274e-002, 7.692038e-003, 3.237570e-002, -1.052964e-002, -1.153616e-001, -1.183345e-001, -3.349878e-002, 2.451547e-002, 4.650391e-002, 5.761916e-002, -7.483327e-003, 8.484282e-003, -2.512182e-002, -7.069041e-002, -8.008122e-003, 4.103822e-002, 2.731569e-002, -2.654012e-002, -6.703765e-002, -4.066048e-002, 1.489015e-002, 6.435624e-002, 8.811324e-002, 5.573782e-002, 2.961376e-003, -2.288967e-002, 8.273072e-003, 9.986348e-003, -7.487164e-002, -1.011260e-001, -4.881306e-002, 4.546095e-003, 3.564834e-002, 5.125315e-002, -5.872987e-003, 2.848298e-002, 2.705314e-002, -3.407713e-002, -3.560760e-002, -3.114513e-002, -4.271659e-002, -6.651729e-002, -7.636306e-002, -4.261044e-002, 1.085015e-002, 5.491893e-002, 6.909027e-002, 2.959795e-002, -2.306224e-002, -4.853140e-002, -2.182997e-002, 2.554877e-003, -1.656873e-002, -2.889916e-002, -1.878992e-002, 3.681324e-003, 1.987670e-002, 1.227132e-002, -1.915934e-002, 2.547260e-002, 7.708965e-002, 5.164667e-002, 1.372051e-002, -2.273536e-002, -2.829802e-002, -2.611406e-002, -2.476250e-002, -1.131024e-002, 1.160067e-003, 1.919013e-002, 3.528155e-002, 2.694809e-002, 1.572733e-002, 2.090398e-002, 2.476187e-002, 2.839856e-002, 3.326516e-002, 3.394490e-002, 8.328582e-003, -1.168034e-002, -1.234313e-002, -3.680987e-002, -2.114775e-002, -3.953944e-003, 6.274915e-002, 5.755204e-002, 5.782542e-003, -4.600766e-002, -4.375218e-002, -1.382899e-002, 3.083971e-002, 5.815819e-002, 5.636325e-002, 3.110935e-002, 2.300457e-003, 2.359850e-003, 1.920750e-002, 1.777964e-002, 1.459545e-002, 2.327896e-002, 5.330702e-002, 6.463057e-002, 3.242036e-003, -2.647676e-002, -3.085932e-002, -6.264121e-002, 6.353150e-005, -2.381168e-002, 5.875855e-003, 2.606477e-002, -4.539539e-003, -5.726353e-002, -6.274985e-002, -3.662995e-002, 9.665643e-003, 4.435380e-002, 3.576987e-002, 1.105538e-002, -1.788015e-002, -2.295620e-002, -1.937442e-002, -2.412466e-002, -3.396803e-002, -6.560596e-003, 4.662601e-002, 5.645460e-002, -1.753086e-002, -9.103978e-003, -9.903171e-004, -6.167007e-002, 8.763734e-003, 6.544386e-003, -2.041909e-002, -6.177677e-003, -4.911454e-003, -1.565241e-002, -1.465900e-002, 1.307146e-002, 4.540809e-002, 6.305421e-002, 4.992145e-002, 2.191648e-002, -1.051588e-003, -3.467426e-003, -9.671549e-003, -2.330310e-002, -3.803218e-002, -1.183991e-002, 2.575412e-002, 1.712670e-002, -1.147730e-002, 4.363176e-002, 5.433707e-002, -4.565552e-002, -2.018846e-002, 4.155491e-002, 3.810692e-003, 1.017392e-002, 1.362564e-003, 1.371317e-002, 2.327769e-002, 3.274896e-002, 4.079381e-002, 2.976822e-002, 3.031793e-003, -8.322885e-003, -5.784479e-003, 1.136957e-002, 1.699638e-002, 5.679234e-004, -1.344819e-002, -1.822696e-002, 2.878794e-003, -8.371618e-004, 1.011988e-002, 7.955448e-002, 4.201626e-002, -2.186811e-002, -5.695804e-002, 1.909823e-003, 2.294250e-002, 3.481782e-002, 1.763219e-002, -3.095535e-003, -3.256577e-003, -8.001096e-003, -3.706240e-002, -8.226838e-002, -1.076289e-001, -9.010700e-002, -5.142437e-002, -3.904500e-003, 1.999265e-002, -9.208174e-004, -1.485672e-002, -1.700100e-002, 2.277322e-003, 6.444419e-003, 8.053053e-003, 3.868773e-002, -3.916502e-003, -8.441419e-003, -6.415747e-002, -6.768827e-002, 1.195294e-002},

© ISO/IEC 2004 — All rights reserved


Copyright International Organization for Standardization
Provided by IHS under license with ISO
No reproduction or networking permitted without license from IHS
Not for Resale

{-1.253634e-001, -2.580885e-002, 6.937052e-002, 1.045966e-001, 5.807999e-002, 9.039898e-002, -1.175404e-001, -8.669428e-002, -6.042212e-002, -3.679836e-002, 9.772982e-002, 9.760461e-002, 8.651852e-002, 9.233204e-003, -1.176309e-001, -1.095549e-001, 3.744541e-003, -3.343274e-003, -1.996584e-002, 3.852309e-002, 3.728084e-002, -1.059189e-002, -5.665422e-002, -2.410756e-002, -6.636847e-002, -2.535593e-002, -6.393575e-003, -5.466977e-002, -4.217032e-002, 1.293726e-002, -8.405596e-002, 3.194072e-003, 4.067709e-002, -6.073104e-002, 4.451371e-003, 1.179792e-003, 1.896340e-002, -1.014391e-002, -5.900509e-002, -5.315078e-002, 2.222650e-002, 4.440037e-002, 2.561725e-003, 1.545081e-002, 4.773168e-002, 6.673398e-003, -1.206285e-002, -9.772449e-003, -5.010870e-003, -8.502094e-003, -8.957222e-002, -1.364843e-001, -2.450119e-003, -2.486687e-002, -1.417726e-002, 7.805223e-002, 1.256064e-001, -9.171552e-003, -5.050528e-002, -4.138375e-002, -4.414182e-002, -1.355987e-002, -2.326772e-003, 2.897553e-002, 7.992581e-002, 8.099124e-002, 1.605428e-002, 2.394398e-003, 3.095249e-002, 1.134425e-002, 2.236777e-002, -1.441175e-002, 2.055333e-002, -9.480149e-003, -5.606960e-002, -1.420621e-002, 3.263356e-002, -3.104300e-002, 1.502212e-002, 8.933103e-002, 1.293628e-001, 2.729114e-002, -7.393435e-002, -1.907425e-002, -4.483025e-002, -3.193115e-002, 9.746460e-003, 5.973845e-002, 9.921883e-002, 8.429018e-002, 1.115701e-002, -5.532152e-003, -6.027137e-005, 8.423412e-003, 4.506718e-002, -1.253474e-002, 9.219895e-002, 1.054000e-001, 8.558776e-002, 6.244631e-002, 5.621599e-003, -2.990165e-002, -1.970591e-002, 2.113489e-002, 3.407962e-002, -6.007456e-003, -7.453539e-002, -4.558072e-002, -1.208536e-002, -2.367056e-002, -1.294401e-002, 3.301638e-002, 7.738774e-002, 6.593363e-002, -5.172524e-003, -2.337856e-002, -1.955776e-002, -6.185837e-003, 3.708552e-002, 1.621833e-002, 1.245238e-001, 1.164216e-001, 3.876182e-002, 3.269807e-002, 1.331451e-002, -2.031207e-002, -3.284358e-002, -1.141539e-002, -4.084054e-002, -6.316869e-002, -2.720964e-002, -2.362832e-002, -4.277813e-002, -6.654745e-002, -5.520957e-002, -2.620059e-002, 5.939648e-003, 5.926187e-003, -3.981586e-002, -2.771054e-002, -8.590917e-003, -1.086771e-002, 2.116442e-003, 4.419799e-002, 5.711052e-002, -1.670367e-002, -6.150733e-002, 4.567968e-002, 3.960719e-002, 1.928768e-002, -2.402872e-002, -7.651493e-003, -2.213670e-002, -1.989976e-002, 5.942443e-002, 4.801666e-002, 1.642089e-002, -2.217516e-002, -4.695467e-002, -4.172562e-002, -2.463131e-002, -2.247932e-002, -3.805452e-002, -3.138244e-004, -3.543728e-004, -3.031294e-002, -3.620151e-002, 3.513925e-002, -2.502596e-002, -1.040691e-001, -5.381404e-002, 8.690248e-003, -2.399606e-002, 3.246032e-002, -1.548007e-002, -5.402586e-002, -6.814576e-002, -5.118248e-002, 4.671653e-002, 6.043506e-002, 3.022793e-002, 3.485419e-002, 3.530572e-002, 3.837774e-002, 3.099859e-002, -2.552387e-003, -1.469824e-002, 2.113200e-002, -1.487324e-002, -4.581669e-002, -7.408343e-002, -1.191766e-002, -6.916260e-002, -7.335217e-002, 1.415438e-002, -3.543306e-002, -2.012960e-002, 8.185423e-002, 1.597183e-003, -3.542000e-002, -4.583343e-002, -1.672618e-002, 5.843548e-002, 1.274108e-002, -4.565539e-002, 1.031013e-002, 5.132224e-002, 6.915840e-002, 4.554486e-002, -1.030812e-002, -1.507420e-002, 1.471521e-002, -1.892063e-002, -3.552051e-002, -8.726518e-002, -3.835782e-002, -4.637181e-002, -2.421468e-004, -1.109727e-003, -7.619742e-002, -6.160815e-002, 1.259217e-002, -2.521551e-002, 4.273512e-003, 4.814003e-002, 9.000195e-002, 7.704127e-002, -4.566876e-002, -1.105594e-001, -3.153505e-002, 4.079469e-002, 6.260039e-002, 2.798371e-002, -2.694352e-002, -1.470616e-002, 1.719668e-002, -1.459663e-002, -1.360954e-002, -5.121748e-002, -3.430427e-002, 2.003460e-002, 3.008333e-003, -5.715243e-002, -7.028487e-002, -1.659664e-002, 4.946754e-003, -4.104367e-002, -2.683011e-002, 2.649782e-002, 4.410341e-002, 1.192357e-004, -8.629014e-002, -1.025233e-001, -2.888933e-002, 3.638578e-002, 4.623397e-002, -2.219913e-003, -3.870172e-002, 2.380566e-005, 1.730881e-002, 4.440209e-003, 3.741529e-002, -4.182935e-003, -2.548177e-002, 5.681354e-002, 2.519378e-002, -1.492561e-003, 1.979160e-002, 6.948933e-002, 7.082244e-002, 7.029771e-004, -2.753369e-002, -1.411017e-002, -6.787270e-003, -1.433001e-002, -4.851643e-002, -5.869597e-002, -8.161625e-003, 6.744115e-002, 4.726099e-002, -3.174982e-002, -3.902598e-002, 1.132486e-002, 2.705771e-002, 3.050612e-002, 7.916943e-002, 2.490215e-002, 1.437668e-003, 6.174983e-002, 3.544286e-002, 1.345729e-002, -3.867519e-003, 2.046939e-002, 2.588917e-002, 1.155145e-002, -4.025324e-003, -3.863430e-002, -4.876919e-002, -2.258656e-002, -1.160072e-002, -1.588497e-002, 1.481707e-002, 7.043338e-002, 5.075853e-002, -3.300732e-002, -2.492007e-002, 1.934964e-002, 3.154431e-002, 4.943040e-002, 9.789504e-002, 2.739257e-002, 1.905239e-002, 6.684931e-002, -2.596422e-003, -8.385083e-002, -1.045793e-001, -3.279393e-002, 4.377870e-002, 1.002965e-001, 1.139341e-001, 4.057471e-002, -2.127061e-003, -3.040651e-002, -4.726987e-002, -3.930775e-002, 3.629286e-003, 4.148526e-002, 2.390825e-002, -2.743936e-002, -8.302026e-003, 3.218495e-002, 3.745382e-002, 3.693181e-002, 7.962700e-002, 1.743932e-002, 3.031934e-002, 1.112503e-001, 6.875727e-002, -4.631510e-002, -1.084015e-001, -6.858800e-002, -2.501237e-003, 3.101941e-002, 3.549504e-002, -1.143511e-002, -2.657110e-002, -4.415263e-002, -3.441535e-002, -8.006000e-003, 9.379564e-003, -1.880112e-002, -5.755800e-002, -5.397237e-002, -2.791081e-003, 3.752386e-002, 3.361577e-002, 1.037495e-002, 4.731115e-002, -1.867707e-003, 2.176812e-002, 8.977243e-002, 7.868833e-002, 9.454681e-003, -3.313856e-002, -2.006871e-002, 1.055214e-002, 7.990213e-003, 3.329187e-003, 1.622534e-003, 1.377534e-002, 1.200330e-002, 4.055637e-002, 7.074463e-002, 4.693934e-002, -3.177511e-002, -8.808553e-002, -7.066325e-002, -1.530425e-003, 3.158903e-002, 2.797666e-002, -1.723341e-002, 1.998154e-002, -2.272862e-002, -7.045691e-003, -


© ISO/IEC 2004 — All rights reserved

Copyright International Organization for Standardization
Provided by IHS under license with ISO
No reproduction or networking permitted without license from IHS
Not for Resale

2.873354e-002, -2.237213e-002, 4.290774e-003, 3.087794e-002, 3.790540e-002, 2.374523e-002, 3.548089e-003, -6.215689e-003, -1.017303e-002, -2.081187e-002, -2.989759e-002, -2.806541e-002, -2.000253e-002, -1.195037e-002, -1.478634e-002, -5.472747e-002, -4.248021e-002, -7.335782e-003, 1.424479e-002, 2.404700e-002, -2.539665e-002, 2.433408e-003, -3.559783e-002, -7.455629e-003, -3.869901e-002, -3.032130e-002, -2.315728e-002, -7.177486e-003, 9.121653e-003, 1.058177e-002, 8.438457e-003, 5.539033e-003, 5.298928e-003, 1.772905e-003, -6.065121e-003, -1.581941e-002, -8.849851e-003, 1.431618e-002, 3.622823e-002, 1.157705e-002, -8.264619e-003, -2.938072e-002, -6.539809e-003, 6.249833e-003, -2.268763e-002, 2.158288e-002, -2.502603e-002, 4.246599e-003, -1.694942e-002, -2.920769e-002, -3.347878e-002, -3.052420e-002, -1.453930e-002, -5.274233e-003, 1.416104e-002, 2.616239e-002, 2.097139e-002, 1.219324e-002, -1.218858e-003, -7.272481e-003, 2.905260e-003, 3.271833e-002, 7.149517e-002, 4.102001e-002, -2.061363e-002, -4.820594e-002, -1.690460e-002, -3.599382e-002, -4.973325e-002, 8.440005e-003, -2.338977e-002, 1.517981e-004, 1.988612e-002, 2.104065e-002, 1.026736e-002, -8.777128e-003, -1.401854e-002, -9.404809e-003, -3.751402e-003, 3.813543e-003, 8.813805e-003, 4.455499e-003, -9.921600e-003, -1.954390e-002, -9.182870e-003, 2.540795e-002, 5.965271e-002, 1.427520e-002, -5.519599e-002, -5.350605e-002, -2.430437e-002, -5.132326e-002, -6.228622e-002, -1.441275e-002, -1.078470e-002, -2.257666e-002, 2.067848e-002, 4.121526e-002, 4.740547e-002, 4.074700e-002, 2.155333e-002, 2.340852e-003, -8.797016e-003, 6.387270e-004, 1.628478e-002, 2.341268e-002, 1.360535e-002, -1.027622e-002, -1.734646e-002, 8.957156e-003, 2.046062e-002, -1.774682e-002, -3.965940e-002, -2.519004e-002, -1.059644e-002, 1.220884e-002, -2.299258e-002, -3.365732e-003, 2.779563e-002, -1.527500e-002, 1.339751e-003, 1.530290e-002, 2.617802e-002, 3.815171e-002, 1.614882e-002, -1.565222e-002, -3.612475e-002, -3.055498e-002, 1.549745e-003, 2.857777e-002, 2.320202e-002, -6.847858e-003, -5.025475e-003, 1.313514e-002, 5.752676e-003, -8.032372e-003, 1.148033e-002, -8.199845e-003, 8.566662e-003, 6.683074e-002, -2.182599e-004, -9.898677e-003, 1.702634e-002, 1.344222e-002, -1.358814e-002, -1.209511e-002, -5.878458e-003, 5.281528e-003, -4.704117e-003, -3.583755e-002, -4.846382e-002, -3.293591e-002, 8.432755e-003, 3.936682e-002, 3.463208e-002, 1.654951e-002, 1.683976e-002, 1.946788e-002, 4.637923e-003, 1.271414e-002, 2.900446e-002, -3.496484e-002, -8.961730e-003, 7.545519e-002, -1.216458e-002, -2.470753e-002, 2.087610e-003, 2.033464e-002, -1.030343e-002, -2.865324e-002, -1.637646e-002, -7.193895e-003, -2.338551e-002, -4.581578e-002, -4.476815e-002, -1.706339e-002, 1.890276e-002, 4.474112e-002, 3.368127e-002, 2.362728e-002, 1.388876e-002, 1.851328e-003, -6.376787e-003, 9.067079e-003, -1.135976e-002, -7.425528e-002, -2.111941e-002, 5.088641e-002, -1.717343e-002, -1.248503e-002, 3.249244e-002, 3.264422e-002},
{-3.131410e-002, -2.244233e-002, -1.423949e-002, 2.607233e-002, 6.000067e-002, 7.691556e-002, 1.010414e-002, -2.766284e-002, 5.752797e-003, -6.609040e-002, -6.252383e-002, 2.912102e-002, 2.725353e-002, 4.819582e-003, 4.376460e-003, 1.670214e-002, 4.034373e-002, 1.423268e-002, -4.804780e-002, -4.017610e-002, -3.067496e-002, -1.023593e-001, -7.383375e-002, 2.628591e-002, -6.088534e-002, -6.017471e-002, -5.745880e-002, -5.284294e-002, -1.393976e-002, 7.613511e-002, 3.485706e-002, -2.605437e-003, 4.844275e-002, 3.027065e-002, -6.487875e-002, 3.532976e-002, 3.100398e-002, -8.535381e-003, -1.497730e-002, -1.045831e-002, 9.163676e-003, 2.200589e-002, 1.252367e-002, 3.033174e-002, 3.832747e-002, -3.285415e-002, -5.381079e-002, 7.679978e-003, -4.660305e-003, 1.065324e-002, -3.075851e-002, -9.148079e-002, -5.011483e-002, 5.146424e-002, 3.934099e-002, 1.110945e-003, 5.674037e-002, 1.061041e-001, -2.902452e-002, 2.436927e-002, 4.422718e-002, -2.126852e-003, -3.433539e-002, -4.657404e-002, -2.141999e-002, 1.535562e-002, 3.063984e-002, 4.620888e-002, 4.921305e-002, 1.591946e-002, -1.663972e-002, -1.760603e-002, 1.103186e-001, 1.006838e-001, 4.633396e-004, -1.137311e-001, -5.134451e-002, 8.937413e-003, 5.686434e-003, -3.262885e-002, 2.773396e-004, 9.551630e-002, 1.871637e-003, -2.533818e-002, 4.916207e-002, 3.312680e-002, 4.773126e-003, -9.618444e-003, -2.641548e-003, 1.676125e-002, 2.247043e-002, 2.160518e-002, 1.649004e-002, 2.529187e-002, 1.205084e-002, -2.409205e-002, 1.419411e-001, 9.874789e-002, -3.749170e-002, -7.963397e-002, -2.839860e-002, -8.909279e-003, -2.403011e-002, -6.115423e-002, -8.253006e-002, 2.480863e-003, 1.907923e-002, -5.142067e-002, -1.489493e-002, 6.591647e-003, -2.601728e-003, -2.381842e-002, -3.344015e-002, -2.675971e-002, -3.256879e-002, -3.978114e-002, -2.535362e-002, 2.667706e-002, 3.763149e-002, 1.306330e-003, 9.708829e-002, 6.303513e-002, -3.293929e-003, 1.624677e-002, 1.328597e-002, 5.606094e-003, 4.428132e-003, 2.030059e-003, -5.545510e-002, -6.358400e-002, -2.650392e-002, -8.257339e-003, -3.387624e-002, -5.855265e-002, -7.489987e-002, -8.601769e-002, -8.350123e-002, -6.536484e-002, -6.252645e-002, -4.637894e-002, -2.715992e-002, 3.301705e-002, 5.046319e-002, 2.826241e-002, 9.300424e-002, 5.650348e-002, 2.858024e-002, 3.142885e-002, 1.865084e-002, 8.779446e-003, 1.797470e-002, 7.926743e-002, 4.271317e-002, 2.702858e-002, -1.712087e-002, -1.283661e-002, 3.241944e-002, 7.909243e-003, -2.266101e-002, -3.825992e-002, -3.393267e-002, -1.775155e-002, -1.722657e-002, -1.212634e-002, -1.406763e-002, 3.911628e-002, 4.964544e-002, 3.766700e-002, 5.904045e-002, -1.721535e-002, -1.585441e-002, 1.762446e-002, 2.605425e-002, -2.055396e-002, -6.185354e-002, -3.229676e-002, -6.672587e-002, 3.405038e-002, 1.129183e-001, 5.835831e-003, 7.967624e-003, 4.332418e-002, 3.316507e-002, 3.751077e-002, 3.794224e-002, 3.350580e-002, 2.241090e-002, 1.073837e-002, -1.092881e-002, 3.685916e-002, 3.229668e-002, 3.674116e-002, -

© ISO/IEC 2004 — All rights reserved


--`,,```,,,,````-`-`,,`,,`,`,,`---

Copyright International Organization for Standardization
Provided by IHS under license with ISO
No reproduction or networking permitted without license from IHS
Not for Resale

3.486166e-002, -9.468745e-002, -3.609162e-002, 8.092417e-002, 1.294875e-001, -6.132146e-003, -4.479364e-002, -2.177152e-002, -8.924476e-002, -3.356300e-002, 1.643417e-001, 5.279302e-002, -6.175871e-002, -1.038601e-002, 6.846494e-003, 1.624288e-002, 2.955801e-002, 2.232636e-002, 1.049068e-002, -5.641063e-003, -3.444949e-002, 1.030084e-002, 8.815194e-003, 2.429790e-002, -7.231934e-002, -7.886356e-002, -2.069318e-002, 2.339174e-002, 2.059042e-002, -2.472817e-002, 1.083786e-002, 7.935695e-002, 3.602326e-002, 7.909980e-003, 5.918444e-002, -2.357717e-002, -1.139662e-001, -5.921625e-002, -1.333522e-002, -7.417071e-003, 6.929359e-003, 9.419135e-003, 1.063883e-003, -1.735242e-002, -4.060685e-002, -1.728484e-002, -3.441710e-002, -4.037056e-002, -1.918867e-002, -1.779519e-003, -7.475724e-003, -3.159281e-002, -5.555722e-002, -4.577867e-002, 2.951673e-002, 4.340605e-002, -3.957497e-002, -1.879660e-002, 1.663779e-002, -3.541195e-002, -7.545045e-002, -4.175366e-002, 4.412000e-003, 7.570536e-003, -6.505254e-003, -1.090938e-002, -1.219383e-002, -2.329919e-002, -3.897196e-002, -3.632300e-002, -6.084854e-002, -9.505849e-002, 3.479276e-002, 3.745511e-002, 1.949491e-002, -3.919599e-003, -7.487874e-004, 5.196958e-002, 1.443996e-001, 1.176548e-001, 7.784071e-003, -3.495063e-002, -2.697756e-002, -8.371114e-003, -4.507100e-003, -2.165314e-002, 2.676235e-002, 4.656989e-002, 9.717788e-003, -1.098925e-002, -1.786115e-002, -1.970254e-002, -2.604847e-002, -4.544279e-002, -3.226790e-002, -6.099028e-002, -1.018216e-002, -1.330969e-002, -1.056607e-002, -2.955771e-002, -3.645711e-002, -2.287023e-003, 3.808864e-002, 1.791901e-002, -1.227450e-002, -3.517485e-002, -3.473177e-002, -2.669317e-002, -1.998556e-002, -3.223875e-002, 1.041041e-002, 5.437682e-002, 3.269611e-002, 4.874760e-003, -1.061824e-002, -1.152661e-002, -1.075516e-002, -1.921415e-002, 9.438976e-003, -2.913787e-002, -9.239849e-002, -4.736295e-002, 3.225391e-002, 3.860219e-002, 6.965825e-003, -2.885472e-002, -4.349145e-002, -3.065939e-002, -4.460543e-003, 2.283100e-002, 8.154546e-002, 1.147464e-001, 8.728472e-002, 1.657980e-003, -2.555309e-002, 1.882676e-002, 4.916116e-002, 3.554690e-002, 2.012691e-002, 1.152364e-002, -4.218012e-003, 8.861931e-004, 5.411004e-002, 1.514602e-002, -1.321056e-001, -5.558916e-002, 5.705008e-003, -1.141744e-002, -5.120478e-002, -4.740336e-002, -2.817780e-002, -2.323274e-002, -1.780344e-002, -1.906369e-002, 2.584569e-002, 8.552898e-002, 8.090621e-002, 1.142801e-002, -5.033439e-002, -3.369291e-002, 2.583690e-002, 4.509710e-002, 4.188946e-002, 3.346518e-002, -3.316776e-003, 6.776715e-003, 5.450621e-002, 4.746645e-002, -1.078290e-002, 7.948042e-003, -6.886847e-002, -1.148213e-001, -7.902777e-002, 6.208189e-003, 8.311788e-002, 8.498432e-002, 6.871384e-002, 2.053346e-002, -2.048769e-002, -2.121890e-002, -1.873876e-002, -2.560798e-002, -4.371963e-002, -4.497408e-002, 1.055872e-003, 3.730661e-002, 3.529583e-002, 4.469982e-002, -8.144374e-003, -3.778382e-003, -1.443585e-003, 2.214068e-002, 5.974482e-002, 3.904401e-002, -5.761031e-002, -9.403756e-002, -5.318526e-002, 1.136482e-002, 5.822838e-002, 4.690010e-002, 1.647918e-002, -4.385377e-002, -7.472714e-002, -4.800863e-002, 6.550308e-003, 2.693702e-002, 1.122744e-002, -7.984530e-004, 1.070164e-002, 9.310577e-003, 1.372720e-002, 2.977968e-002, 2.883144e-003, 2.497738e-004, -2.388152e-002, 5.485025e-003, -4.136628e-002, -7.340397e-002, -4.920346e-002, 2.942829e-004, 3.867871e-002, 5.114164e-002, 4.540822e-002, 3.045704e-002, 1.327371e-002, -1.467604e-002, -2.308319e-002, -1.523098e-002, -9.818300e-004, 7.071522e-004, 2.027274e-002, 2.790861e-002, 2.276201e-002, -1.645759e-002, -7.057854e-003, 2.006730e-002, 3.053015e-002, 2.096416e-002, -2.905085e-002, 1.412878e-002, -3.149927e-002, -1.167998e-002, 4.195045e-002, 7.627524e-002, 6.667866e-002, 3.104579e-002, -1.837985e-002, -3.521453e-002, -2.545246e-002, -9.698681e-003, 1.650031e-002, 4.317189e-002, 3.730706e-002, -4.435287e-003, 1.520033e-004, 2.809331e-002, 5.012334e-003, -2.820064e-002, -1.829903e-002, 1.622246e-002, 3.509270e-002, 3.374870e-002, -1.639407e-002, 2.137633e-002, 2.653623e-003, 7.339871e-003, 4.571624e-002, 7.225880e-002, 5.108712e-002, -2.272602e-003, -5.735720e-002, -7.615561e-002, -4.325718e-002, -4.465871e-003, 3.070168e-002, 4.641940e-002, 1.518604e-002, -3.715683e-002, -3.603300e-002, 7.423192e-003, 3.194250e-003, -2.668433e-002, -1.411680e-002, 7.282945e-003, 1.198287e-002, 1.448500e-002, -1.531920e-002, -3.912797e-004, 2.167396e-002, 3.280496e-003, 1.012263e-002, 2.485438e-002, 2.523080e-002, -6.717770e-004, -3.431296e-002, -3.904718e-002, 2.000001e-003, 5.337845e-002, 7.836825e-002, 5.709624e-002, -1.198936e-002, -6.292192e-002, -6.074309e-002, -8.640195e-003, 1.926984e-002, 9.047707e-003, 3.641303e-004, 7.090475e-003, -2.845371e-002, -8.729178e-003, -3.260497e-002, 7.643271e-003, 3.014315e-002, 5.828465e-003, -2.592141e-003, 9.737827e-003, 1.319256e-002, 1.018521e-003, -2.112974e-002, -3.539169e-002, -1.228363e-003, 5.292435e-002, 8.617475e-002, 5.196870e-002, -1.200305e-002, -5.533641e-002, -5.428624e-002, 4.159170e-003, 4.869053e-002, 2.526385e-002, 3.214582e-002, 2.866104e-002, -2.407308e-002, 4.503288e-003, -1.150351e-002, 8.408754e-003, 3.146196e-002, 1.401372e-002, -7.934812e-004, 9.850931e-003, 1.538529e-002, -3.699040e-003, -3.125164e-002, -7.233149e-002, -5.500869e-002, 9.227652e-003, 4.815781e-002, 3.876683e-002, 8.566417e-003, -7.874687e-003, -1.988271e-002, 6.360390e-003, 2.690040e-002, -3.881324e-004, 2.085344e-002, 4.586441e-002, -1.847912e-002, 4.989878e-003, -2.281441e-003, -1.216804e-002, 5.711607e-003, 1.745715e-002, 7.489031e-003, 1.549020e-002, 1.480010e-002, -7.440511e-003, -4.328240e-002, -8.192364e-002, -7.877921e-002, -3.688608e-002, 1.240518e-003, 3.155175e-002, 2.345384e-002, 1.748248e-002, -1.409686e-002, -2.758621e-002, -3.622623e-002, -5.440423e-002, -4.031712e-002, 6.330759e-003, -3.721083e-002, 5.364701e-003, 1.593131e-002, -2.059670e-002},


© ISO/IEC 2004 — All rights reserved

Copyright International Organization for Standardization
Provided by IHS under license with ISO
No reproduction or networking permitted without license from IHS
Not for Resale

{1.071891e-001, 1.645585e-001, 8.378526e-002, -3.494030e-002, -7.295259e-002, 2.481317e-002, 6.725388e-003, 3.231601e-002, 5.524046e-002, 7.725588e-002, -9.855589e-002, -1.207078e-002, 1.587581e-001, 1.561508e-001, -7.327875e-002, -2.152568e-001, -8.108228e-002, 1.054441e-001, 1.321873e-001, 4.935666e-002, 2.307529e-002, -9.879605e-003, 1.713298e-002, -5.938245e-002, 4.176021e-002, 1.326764e-002, -5.762199e-002, -9.185591e-002, -1.747147e-003, 5.332014e-002, 7.099391e-003, 1.840161e-002, 1.775819e-002, 9.333689e-002, -6.243333e-002, -1.471726e-001, -1.160154e-002, 6.093240e-002, 1.792341e-002, -3.345134e-002, -1.391225e-002, 4.213183e-002, 5.120249e-002, 3.356968e-003, -1.964636e-002, -5.163070e-002, 1.839421e-003, -4.432202e-002, -2.932157e-002, -5.320318e-002, -5.567067e-002, -3.812580e-003, 6.671074e-002, 3.150657e-002, 2.101346e-002, 2.901478e-002, 5.900494e-004, 5.147548e-002, 2.136186e-002, -1.250579e-001, -8.800050e-002, -3.043463e-002, -2.586173e-002, -5.369817e-002, -6.976771e-002, -6.823775e-002, -5.077770e-002, -4.504263e-002, -3.669386e-002, -6.925254e-002, -1.786547e-003, -3.237256e-002, 1.982762e-002, 1.920274e-002, 2.942573e-002, 3.228660e-002, 3.644117e-002, -1.402354e-002, 2.317829e-002, 2.282757e-002, -1.547720e-002, 2.203290e-002, 1.791058e-002, -4.242786e-002, -3.663186e-002, 2.188807e-002, 3.652307e-002, 1.370925e-002, -2.206766e-002, -4.519342e-002, -4.310075e-002, -2.452979e-002, -3.188216e-003, -5.602591e-002, 1.993862e-002, -2.576514e-002, 8.558977e-002, 3.243304e-002, -3.241520e-002, -2.535274e-002, -1.845605e-002, -3.909711e-002, -1.225749e-002, -1.216649e-003, -3.988187e-002, -1.749980e-002, 9.856271e-003, -7.310167e-002, -2.526747e-002, 7.616935e-002, 1.326866e-001, 1.311572e-001, 8.944959e-002, 3.039121e-002, -8.813984e-003, -2.070076e-002, 9.473683e-003, -3.046138e-002, 3.003871e-002, -9.190424e-005, -4.037253e-002, -1.109761e-001, -8.103851e-002, 2.840535e-003, 1.217784e-002, -2.298449e-002, -7.089481e-002, -6.364804e-002, -6.361616e-002, -3.311192e-002, 3.022426e-002, -1.518976e-002, -9.330978e-002, -2.653865e-002, 4.763370e-002, 7.081649e-002, 4.635549e-002, -8.469187e-003, -2.288873e-002, -5.806121e-003, 2.710432e-002, -7.039078e-004, 3.556928e-002, 2.397217e-002, -7.831082e-002, -5.839205e-002, 2.225844e-002, 2.345225e-002, 8.096799e-002, 4.826885e-002, -8.322385e-002, -5.206861e-002, -1.910760e-003, 1.805152e-002, 1.194159e-002, 6.491238e-002, 9.030930e-003, -1.941380e-002, -4.375669e-003, 7.790406e-003, 7.749675e-003, 4.014111e-003, 1.255648e-002, 2.935950e-002, 5.718847e-002, 1.510181e-002, 2.676270e-002, 1.212095e-002, 1.530449e-002, 3.403622e-002, 1.761090e-002, -4.864466e-002, 2.479358e-002, 8.868469e-002, -3.791420e-003, 5.606235e-003, 4.648587e-003, -3.350422e-002, -6.860101e-002, -1.591441e-002, 4.814844e-002, 6.521830e-002, 8.181702e-002, 8.336348e-002, 7.977166e-002, 5.168305e-002, 2.378859e-002, 3.093861e-002, 5.650413e-002, 9.967016e-003, 7.507491e-004, -2.398651e-002, -8.592637e-003, -1.642485e-002, -8.417154e-003, -4.881538e-002, -3.662401e-002, 1.476985e-002, 1.784223e-002, 2.716571e-002, -4.761543e-002, -5.378105e-002, 8.473880e-003, 3.015813e-002, 1.227710e-002, 2.625653e-003, 9.750486e-003, 2.322961e-002, 1.553967e-002, -1.986932e-002, -4.058431e-002, 2.849398e-003, 4.073309e-002, 3.788159e-004, -1.907083e-002, -5.336906e-002, -5.858759e-002, -3.716631e-002, 5.430697e-002, 5.981143e-002, -3.028256e-002, -4.854264e-002, 4.601462e-003, 3.198466e-002, -6.164789e-002, -9.156288e-002, 6.353510e-002, 1.011999e-001, 2.333605e-002, -1.318671e-002, -3.924615e-002, -4.435813e-002, -5.465044e-002, -8.870221e-002, -8.284037e-002, -1.948724e-002, 3.184761e-002, -2.680606e-003, -9.740997e-003, -2.897240e-002, -3.001577e-002, 1.339542e-003, 2.679191e-002, 1.423038e-003, -4.440228e-002, -6.671324e-003, 3.807590e-002, 1.922281e-002, -1.651956e-002, -5.568544e-002, -4.132247e-002, -2.983391e-002, -3.739700e-002, -6.433829e-003, -7.213055e-003, -3.584170e-002, -5.866573e-002, -9.099966e-002, -7.662946e-002, -1.248985e-002, 2.564348e-002, 8.473496e-003, 3.553768e-002, 4.610393e-002, 3.589923e-002, 2.038918e-002, -2.305848e-002, -6.064848e-002, -4.149387e-002, 2.971558e-002, 5.353824e-002, 3.656180e-002, 6.080976e-002, 3.623218e-002, -1.868459e-002, -6.420103e-002, -6.743395e-002, -1.077790e-002, 4.987391e-002, 3.271623e-002, -1.775081e-002, -6.412976e-002, -3.844033e-002, 1.305946e-002, 3.192042e-002, 2.322367e-002, 2.312386e-002, 3.905718e-002, 8.320597e-002, 1.054211e-002, -6.133146e-002, -6.217527e-002, -2.468384e-002, -7.822788e-003, -9.766358e-003, 4.362979e-003, 3.499859e-002, 3.237697e-002, 1.976659e-002, -2.012367e-003, -4.189098e-002, -2.190337e-002, 4.665186e-002, 8.298246e-002, 5.011229e-002, -1.261802e-002, -3.438711e-003, 2.524109e-002, 4.192781e-002, 1.841979e-002, -5.693207e-003, -2.354953e-002, 7.171605e-002, -7.109405e-003, -4.553210e-002, -9.931841e-003, 4.000506e-002, 3.454302e-002, -2.284204e-002, -2.074505e-002, 6.075066e-003, 3.839289e-003, 3.130615e-002, 3.543001e-002, -5.413034e-003, -4.861086e-002, -3.907451e-002, 5.988254e-002, 8.470915e-002, 3.911261e-002, 1.752531e-002, 1.901561e-002, 2.767423e-002, 3.921194e-003, -5.747069e-003, -3.788836e-002, 1.686314e-002, -1.685147e-002, 8.909691e-003, 2.978436e-002, 2.205865e-002, 1.157295e-002, -1.964970e-002, -1.662285e-002, -1.153225e-002, -5.209505e-003, 1.302215e-002, 5.036840e-002, 1.792266e-002, -8.545458e-002, -1.303666e-001, -2.117358e-002, 6.768667e-002, 5.560347e-002, 6.477832e-003, -1.525714e-003, -9.284382e-003, -5.955920e-003, 8.616550e-003, -3.061198e-002, 4.992754e-002, 2.639882e-002, 3.217198e-002, 4.671703e-003, -3.060905e-002, -3.150917e-002, -2.173427e-002, -9.156009e-003, 3.191242e-003, 1.681018e-002, 6.671646e-004, -2.813638e-002, -3.092588e-002, -1.969102e-002, -3.228290e-002, -1.476282e-002, 4.415189e-002, 3.151989e-002, -1.930764e-002, -1.345119e-002, -4.198047e-002, -6.922145e-003, 1.893048e-003, -7.056293e-003,

© ISO/IEC 2004 — All rights reserved


Copyright International Organization for Standardization
Provided by IHS under license with ISO
No reproduction or networking permitted without license from IHS
Not for Resale

2.468458e-002, 2.409103e-002, 2.817869e-002, 3.001024e-002, 1.240405e-002, -1.728735e-002, -2.620029e-002, -3.387613e-002, -1.873233e-002, 6.573066e-003, 4.335027e-003, -4.590259e-003, -2.655344e-003, 3.799227e-002, 3.539095e-002, -5.636622e-004, 3.028588e-002, 8.985594e-003, -3.656204e-002, -1.019252e-002, -5.244275e-002, 4.516909e-003, -1.938581e-002, 2.953410e-002, 7.350358e-003, 1.108311e-002, 1.133328e-002, 1.505742e-002, 6.004943e-003, -3.411696e-002, -5.489075e-002, -5.912578e-002, -4.362751e-002, -1.076882e-002, 9.926225e-003, 1.933889e-002, 2.817785e-002, 4.576392e-002, 2.493722e-002, -1.168086e-002, 1.745206e-002, -5.147994e-003, -3.442316e-002, -2.029168e-002, -4.910379e-002, 4.053247e-002, -1.803769e-002, 4.286140e-002, 9.970388e-003, 2.157115e-002, 7.108020e-003, -3.934216e-003, -2.077322e-003, -6.646089e-003, -1.080657e-002, -4.978867e-003, 1.918852e-002, 5.175048e-002, 5.145327e-002, 3.736117e-002, 3.519989e-002, 1.117545e-002, -1.826884e-002, -3.437242e-002, 1.798440e-003, -1.265683e-003, -3.612352e-003, -3.666412e-003, -3.237527e-002, 2.409157e-002, -1.890361e-002, 1.051819e-002, 1.097056e-003, 2.862533e-003, -1.877812e-003, -1.582486e-002, -3.020222e-002, -2.751831e-002, -3.131151e-002, -2.863090e-002, -1.995993e-002, -3.799232e-003, 1.318848e-002, 2.192612e-002, 1.977037e-002, -2.800830e-003, -3.257294e-002, -4.184514e-002, -1.688718e-002, -4.980697e-003, 2.081363e-002, 3.433939e-002, -1.508659e-002, -2.299157e-003, -3.162018e-002, -2.490392e-002, -3.326069e-003, -2.230956e-003, -7.117968e-003, -4.778756e-003, 5.516969e-003, 1.729562e-002, 2.752073e-002, 3.086203e-002, 1.830044e-002, 1.744912e-003, -1.621389e-003, 3.000868e-003, 7.035564e-003, -3.764891e-003, -1.105924e-002, -1.625525e-002, -1.078126e-002, -1.888728e-002, 2.736066e-002, 7.285352e-002, 1.108135e-002, -1.028286e-002, 5.821128e-003, 4.549756e-002, -1.111112e-002, -1.570608e-002, -2.164100e-002, -2.151515e-002, -1.618958e-002, -5.509020e-004, 6.635053e-003, 1.491121e-002, -4.081668e-003, -2.110568e-002, -2.207686e-002, -1.146746e-002, -4.396790e-003, -4.644600e-003, 6.327004e-003, 6.257902e-004, -2.053051e-002, -4.173349e-002, -5.718594e-003, 3.917408e-002, 5.768605e-003, -1.778410e-002, -6.261935e-003, 6.443915e-002, -7.289134e-003, -6.244229e-003, -1.112658e-002, -2.051001e-002, -2.733265e-002, -2.653701e-002, -3.049804e-002, -1.847871e-002, -2.003878e-002, -1.535103e-002, 5.571193e-004, 7.408603e-004, -3.830123e-003, 4.163167e-003, 2.018964e-002, 1.737816e-002, -9.323106e-003, -3.745318e-002, -4.359047e-002, -2.776990e-002, -3.244339e-003, 3.957455e-003, -4.672771e-002, -9.028634e-003, 4.158878e-002, 3.457438e-002, 3.368531e-002, 2.721875e-002, 1.296114e-002, -2.152905e-003, -1.341382e-002, 5.480300e-003, 1.654601e-002, 2.813463e-002, 3.828701e-002, 2.479913e-002, 8.185056e-003, 1.396816e-002, 3.474154e-002, 6.990836e-002, 5.459475e-002, 9.347967e-003, -2.602183e-002, -1.978380e-002, 1.452770e-002, 6.645728e-002, 1.213716e-002, -4.507083e-002},
{-1.043152e-001, -9.236801e-002, 1.086170e-002, 3.456551e-002, -1.607947e-001, 1.424683e-002, 4.411747e-002, -3.655815e-002, 5.340410e-002, 1.904120e-002, -1.036926e-002, 5.037300e-002, -1.323363e-005, 1.710841e-002, 1.638142e-001, 1.821250e-001, 5.243184e-002, 1.926054e-002, 3.325769e-002, -6.165438e-002, -1.330658e-001, 3.013863e-004, 4.072826e-002, -9.856314e-003, -1.286791e-001, -4.187961e-002, 9.173785e-002, 5.743034e-002, -8.920150e-002, 1.165532e-001, -2.768017e-002, -8.778428e-002, 1.044841e-002, 5.672952e-002, -6.723943e-002, 6.201687e-002, 3.150186e-002, -5.221960e-002, -6.754953e-002, -5.774432e-002, -8.039482e-002, -3.484938e-002, 7.159813e-002, 3.929144e-002, -6.578490e-002, 1.695347e-002, -7.791464e-003, 1.923550e-002, -2.668439e-002, 5.584546e-002, 1.064183e-001, -1.813081e-002, 4.973944e-002, 1.028573e-001, -7.411893e-002, -9.546151e-002, -7.698723e-003, 6.154962e-002, -8.423693e-002, -5.022653e-002, 7.381698e-002, 6.117843e-002, 2.957762e-002, -9.112944e-004, -2.093633e-002, 1.317353e-002, 9.818480e-002, 8.559617e-002, 1.291818e-002, -7.270351e-003, -6.447611e-002, 3.148896e-002, -6.699351e-003, 1.045530e-002, -1.999820e-002, -4.117392e-002, 1.118963e-001, 2.491316e-002, -5.654708e-002, -5.921544e-002, 3.165380e-003, 3.848044e-002, -1.307948e-002, -1.080918e-001, -1.909067e-002, 3.212515e-002, 3.381198e-002, 1.041514e-002, -1.685510e-002, -2.547484e-002, 1.684897e-002, 5.673333e-002, 5.483435e-002, -2.970579e-002, -9.106703e-002, 3.605130e-002, -7.535995e-002, -5.862697e-002, -5.565068e-002, -1.318826e-003, 3.502752e-002, -1.443687e-002, -1.242455e-002, 5.832878e-004, 3.450253e-002, 4.122762e-002, 4.020439e-002, -3.105770e-002, 1.543368e-003, -6.477299e-005, -3.838997e-002, -7.685015e-002, -1.066972e-001, -1.119924e-001, -4.183038e-002, 4.882378e-002, 4.889453e-002, -2.427288e-002, -7.882875e-002, 9.207987e-003, 1.696878e-002, 2.852075e-002, -3.848664e-002, -5.591709e-002, -3.019063e-002, -1.950410e-002, 3.626072e-002, 5.411965e-002, 5.394657e-002, 2.596402e-002, 3.489087e-002, -3.414458e-002, 3.397184e-002, 1.121235e-001, 8.641851e-002, 3.251049e-002, -2.927241e-002, -6.934674e-002, -3.880101e-002, 2.202985e-002, 4.408253e-002, -5.807800e-003, -4.931522e-002, -2.743891e-002, 8.159978e-002, 1.934134e-002, -1.025036e-001, -3.623146e-002, 3.671254e-003, -3.514568e-002, 4.013807e-002, 5.942544e-002, 5.028111e-002, -6.831267e-003, 1.358290e-002, -2.153602e-002, -3.409494e-002, 6.352460e-002, 7.678607e-002, 3.185195e-002, -3.454881e-002, -8.094527e-002, -5.333156e-002, 1.661009e-002, 6.660931e-002, 2.936890e-002, -2.152551e-002, -3.509307e-002, 8.305127e-002, -8.419150e-003, -8.323366e-002, 2.254195e-002, 2.491947e-002, -4.018525e-002, 1.945500e-002, -1.085215e-002, 8.051555e-004, -1.719630e-002, -1.995384e-002, -1.150791e-002, -5.161531e-002, 3.752609e-002, 8.451595e-002, 5.123709e-002, -8.767269e-003, -4.024226e-002, -1.938942e-002, 2.107877e-002, 5.738918e-002, 4.529479e-002, 1.175166e-002, -2.077928e-003,


© ISO/IEC 2004 — All rights reserved

Copyright International Organization for Standardization
Provided by IHS under license with ISO
No reproduction or networking permitted without license from IHS
Not for Resale

4.847135e-002, -1.351426e-002, -3.357003e-002, 3.349863e-002, 4.287249e-002, 6.621635e-003, 4.152073e-004, -5.972275e-002, -2.789939e-002, 1.094495e-002, -1.682125e-002, -4.035971e-002, -6.892136e-002, -4.347743e-003, 5.344382e-002, 4.372827e-002, -1.242916e-003, -2.778095e-002, -2.647970e-002, -9.075170e-003, 3.800719e-002, 3.962335e-002, 2.742594e-002, 4.314501e-002, 1.512136e-002, -1.703025e-003, 2.297815e-002, 7.276959e-002, 6.160092e-002, -3.915824e-002, -3.956137e-002, -2.782516e-002, 5.324004e-003, -2.624240e-002, -4.822603e-002, -1.446688e-002, -3.376243e-002, -3.478466e-002, 5.603894e-004, 1.145364e-002, -6.928215e-003, -3.671518e-002, -4.242256e-002, -2.530103e-002, 3.071106e-002, 2.836078e-002, 3.184213e-002, 4.732358e-002, 5.918454e-003, 2.527820e-002, 3.645756e-002, 6.365557e-002, 6.253331e-002, 1.023601e-004, -1.088927e-002, -1.686746e-002, -8.584281e-004, -3.488781e-002, -4.866672e-002, 1.261863e-002, 1.719764e-002, -4.410171e-002, -3.043743e-002, 5.505650e-003, 4.207721e-003, -1.932468e-002, -3.664453e-002, -3.679460e-002, 1.705024e-002, -9.286569e-004, 7.480320e-003, -2.248707e-002, -2.628808e-002, -2.045662e-002, -1.785714e-002, 2.529924e-003, 2.176363e-002, 1.126029e-002, 2.755462e-002, 2.876318e-002, 2.464209e-002, 1.039785e-003, 3.837911e-003, 3.452509e-002, 2.525991e-002, -4.403934e-002, -6.517000e-002, 1.858155e-002, 4.322152e-002, 1.842044e-002, -1.819654e-002, -3.460903e-002, 6.118062e-003, -2.355122e-002, -1.134611e-002, -7.229698e-002, -4.159349e-002, -6.319630e-002, -6.436173e-002, -4.682069e-002, -2.413526e-002, -1.503656e-002, -8.199318e-003, 2.683644e-002, 3.633885e-002, -3.232843e-002, -4.622323e-002, -3.633323e-003, 1.688406e-002, -2.946282e-002, -6.695956e-002, 2.110954e-002, 9.047380e-002, 6.462134e-002, 5.382279e-003, -3.316360e-002, -2.682901e-003, -2.742222e-002, -8.994968e-003, -5.906847e-002, 3.637529e-002, 3.016861e-002, 1.373113e-002, 1.207611e-002, -3.963364e-003, -1.534745e-002, -9.579214e-003, 7.625926e-003, 2.877350e-002, -2.626259e-002, -6.973507e-002, -3.585148e-002, 1.807398e-002, 1.914381e-002, -2.362546e-002, 1.141300e-002, 9.321103e-002, 7.798882e-002, 9.671484e-003, -1.947143e-002, 6.117992e-003, 4.338707e-003, 2.987238e-002, 3.087808e-002, 6.526440e-002, 7.775127e-002, 3.391298e-002, -3.235147e-004, -3.231399e-002, -3.221867e-002, -7.103258e-004, 1.702100e-002, 4.759757e-002, 2.935946e-002, -6.524369e-003, -2.252875e-002, 9.629869e-003, 2.112399e-002, -3.409687e-002, -5.247947e-002, 2.519536e-002, 4.803254e-002, 1.010595e-002, 3.766957e-003, 1.121919e-002, 1.425568e-002, 4.201204e-002, 9.304498e-002, 2.491793e-002, 2.800775e-002, 2.908187e-002, 7.842135e-003, -1.392536e-002, -2.148695e-002, 9.956141e-003, 2.986600e-002, 3.273085e-002, 2.350680e-003, -3.403427e-002, -5.398530e-002, -1.386370e-002, 4.620673e-002, 8.749723e-003, -8.794747e-002, -6.338410e-002, -4.638652e-003, 1.010607e-003, 1.941316e-002, -7.850546e-003, 2.102477e-003, -2.207766e-004, 5.863012e-002, 2.212723e-002, -3.098658e-003, -4.878968e-003, -1.298627e-002, -2.373587e-002, -2.532570e-002, -8.723868e-003, 2.270087e-002, 4.312099e-002, 3.129656e-002, -2.911847e-003, -7.351743e-003, 2.811890e-002, 9.077800e-002, 8.784185e-002, -3.819730e-002, -8.860861e-002, -3.499831e-002, -5.464198e-003, 9.192393e-003, -4.106420e-003, -1.914577e-002, -6.211355e-002, -2.939927e-002, 3.689978e-002, -2.017052e-002, -3.996027e-002, -2.671692e-002, -1.557015e-002, -1.282997e-002, -1.017149e-002, 1.811790e-002, 5.456108e-002, 3.897921e-002, -1.040068e-002, -3.898530e-002, -2.998340e-002, 4.050445e-003, 3.679960e-002, -1.665630e-003, -5.238675e-002, -1.168066e-002, -8.422085e-004, -9.388745e-003, 1.114529e-004, -1.718328e-002, -6.061579e-002, -5.514340e-002, 6.451521e-002, 6.496137e-003, -3.574139e-002, -4.553047e-002, -5.077344e-002, -3.732493e-002, -3.162424e-002, -2.915726e-002, 8.835809e-004, 2.274946e-002, 2.660264e-002, 2.268163e-002, 1.408660e-002, 1.778210e-002, 2.109058e-002, 1.268376e-002, 2.293649e-003, 1.949753e-002, -1.213348e-002, -8.170102e-003, -4.551175e-003, 2.291596e-002, -1.279255e-002, -4.733338e-005, 2.471546e-002, -1.906559e-002, -4.877363e-002, -3.989535e-002, -3.052977e-002, -1.395475e-002, -1.418086e-002, -2.911839e-002, -2.352540e-002, 4.806684e-003, 2.111830e-002, 2.261359e-002, 1.656048e-002, 1.264374e-002, 1.599313e-002, 1.699495e-002, 4.358574e-002, 2.683393e-002, -1.881083e-002, -1.561994e-002, 6.614197e-003, 4.516128e-002, -1.205035e-003, 7.283950e-003, -4.393107e-003, -3.800128e-002, -5.516693e-002, -2.139352e-002, 2.334507e-002, 4.298927e-002, 2.825075e-002, 1.438406e-004, -1.247554e-002, -1.552944e-002, -2.912208e-002, -3.438616e-002, -3.195985e-002, -1.627171e-002, -8.488362e-003, -3.915628e-003, 2.177202e-002, 7.622359e-003, -3.143935e-002, -4.038881e-002, -1.251413e-002, 2.775306e-002, -1.526569e-002, -2.198306e-002, 2.602520e-003, -1.877739e-002, -2.730174e-002, -5.396222e-003, 4.170914e-002, 6.900592e-002, 5.562511e-002, 4.163906e-002, 2.864501e-002, 4.497206e-003, -3.079641e-002, -4.437379e-002, -3.624924e-002, -1.949590e-002, -1.709670e-002, -1.497901e-002, 9.144593e-003, 2.736947e-003, -4.032278e-002, -1.794890e-002, -1.035254e-002, 3.315179e-002, 5.183938e-002, 2.707571e-003, 1.787216e-002, 1.218099e-002, 1.254938e-002, -3.767554e-003, 8.029570e-003, 2.437136e-002, 2.740689e-002, 3.062213e-002, 2.947842e-002, 1.077611e-002, -1.769657e-002, -1.516846e-002, -9.226258e-004, -4.941734e-003, -1.511809e-002, -3.332782e-003, 1.953210e-002, 1.086761e-002, -2.724804e-002, 1.388272e-002, -1.842263e-002, 1.140065e-003, 5.657618e-002, 3.805689e-002, 2.359518e-002, 2.739144e-002, 2.635263e-002, 2.593576e-003, -1.708901e-002, -2.960070e-002, -2.248986e-002, -1.837148e-002, -7.548282e-003, -1.436184e-003, 1.699086e-003, 2.295172e-002, 3.942743e-002, 2.685881e-002, 5.751702e-003, 1.518860e-002, 1.847548e-002, 4.852487e-003, -1.668111e-002, 3.502236e-002, -8.353558e-003, -4.432467e-002, -2.226594e-002, -4.288729e-003},

© ISO/IEC 2004 — All rights reserved


Copyright International Organization for Standardization
Provided by IHS under license with ISO
No reproduction or networking permitted without license from IHS
Not for Resale

{-3.842193e-002, -2.915455e-003, 3.659356e-002, 4.037831e-002, -1.037752e-004, -1.364578e-002, -3.921495e-002, 3.620408e-002,
5.503511e-002, -2.259619e-002, 4.873322e-002, -3.190788e-003, -7.146173e-002, -9.180790e-002, -9.865889e-002, -1.494254e-002,
4.108154e-002, -1.840353e-006, 8.635716e-003, 7.967848e-002, 9.003603e-002, -6.640220e-002, -2.841190e-002, -4.704992e-002,
8.289536e-002, 8.244909e-002, 5.491225e-002, 2.000773e-002, 7.623241e-003, -2.518980e-002, -3.913580e-002, 3.643608e-002,
6.746317e-002, -4.925897e-002, -1.163337e-002, 9.540263e-003, 4.322738e-003, 1.691164e-002, 2.095469e-002, 1.976107e-002,
1.343064e-002, -5.905535e-002, -8.960871e-002, -2.433701e-003, 6.533361e-002, -2.649003e-002, -1.294408e-002, -5.135947e-002,
3.993220e-002, 6.975304e-004, -2.955606e-002, -1.253453e-002, 2.348668e-002, -8.870932e-003, -1.671461e-002, 3.337009e-002,
6.251786e-002, -3.534553e-002, -5.625378e-002, -1.501175e-002, -2.652689e-002, 7.256313e-003, 3.348297e-002, 3.641072e-002,
1.158452e-002, -4.182338e-002, -1.167372e-001, -6.703945e-002, 3.416525e-002, 1.068570e-002, 1.248181e-003, -2.652018e-002, -
6.318764e-002, -8.628201e-002, -6.244240e-002, 8.036953e-003, 2.299403e-002, 3.617107e-002, 6.050149e-003, 2.662382e-002,
4.946213e-002, -1.975862e-002, -4.930365e-002, 2.343843e-002, -2.858173e-002, -4.723924e-002, -1.127559e-002, 8.885711e-003,
2.695913e-003, -3.947199e-002, -9.885890e-002, -5.621658e-002, 3.544118e-002, 2.939388e-002, 1.041149e-002, 2.171557e-002, -
5.829971e-002, -3.872009e-002, 2.907625e-002, 2.225937e-002, 1.824243e-002, 4.427009e-002, 8.478794e-003, 1.328216e-002,
4.050345e-002, 2.291780e-002, -6.034658e-002, 4.989060e-002, 9.588944e-002, 2.674971e-002, 1.355824e-002, 3.397036e-002,
4.943385e-002, 4.046935e-002, 4.008946e-003, -1.115700e-002, 2.976600e-002, 2.727609e-002, 1.253161e-002, 7.372032e-002, -
7.650088e-003, 2.328861e-002, 2.443888e-002, -5.429868e-002, -1.086189e-002, -1.674112e-003, -2.563570e-002, -1.976756e-002,
1.648820e-003, 1.859837e-002, -5.428887e-002, -3.071070e-002, 1.674071e-002, 4.018183e-002, 7.169076e-002, 9.733075e-002,
1.027342e-001, 7.718475e-002, -8.343727e-004, -4.226810e-002, 9.450111e-003, 1.895097e-002, 1.321660e-002, 6.519375e-002,
4.916673e-003, 6.039974e-002, 8.505534e-003, -3.097111e-002, 1.454290e-002, -6.335819e-002, -5.622725e-002, -2.591652e-002, -
3.864366e-002, -1.331678e-002, -2.303802e-002, -3.107621e-002, -2.276528e-002, -1.052955e-001, -1.317202e-001, -9.493986e-002, -
5.189070e-002, -3.789530e-002, -6.283962e-002, -4.877131e-002, 2.020871e-002, 9.792062e-003, -2.015568e-003, 2.682139e-002,
6.991155e-002, 7.388355e-002, 1.259604e-002, 9.256459e-002, 8.394928e-002, -6.641735e-002, 5.886468e-005, 4.055532e-002, -
7.446704e-004, 2.433661e-002, 6.398952e-002, 2.125444e-002, 3.806524e-002, 9.291450e-003, -4.462751e-002, -4.312838e-002, -
5.732570e-003, 2.068140e-002, 2.505443e-003, 4.984513e-003, 3.072937e-002, -5.055011e-003, -2.950454e-002, -2.234713e-002,
5.383721e-002, -2.287628e-002, -3.936635e-002, 7.133538e-002, 1.365444e-002, -9.785785e-002, -3.234397e-003, 1.242099e-002, -
4.858202e-002, -3.779697e-002, 5.553686e-002, 2.156833e-002, -4.728396e-002, 1.019839e-002, 4.696869e-002, 5.829123e-002,
8.574281e-002, 8.777998e-002, 4.949685e-002, 2.689638e-002, 3.799465e-002, -1.237051e-002, -3.610541e-002, -4.580900e-002, -
4.179530e-002, -1.057982e-001, -6.611223e-002, 2.438267e-002, 6.253359e-002, 8.176814e-003, -3.185859e-002, -3.074327e-002, -
2.585706e-002, 5.496892e-003, 6.430606e-002, 5.932114e-002, -5.319957e-002, -8.928829e-002, -1.605593e-002, 3.802144e-002,
6.092573e-002, 5.493751e-002, 2.173611e-002, 1.613742e-002, 3.405171e-002, -2.347003e-002, -1.505497e-003, -5.762018e-002, -
1.007884e-001, -5.948787e-002, 3.309501e-002, 5.844694e-002, -2.317977e-002, -4.656392e-002, -1.048545e-004, 4.928823e-002, -
2.754927e-002, -1.599080e-001, -6.685362e-002, 8.923899e-002, 6.942863e-002, -4.836772e-002, -7.476624e-002, -1.845115e-002,
1.323473e-002, 8.802078e-003, -5.926493e-003, -1.463327e-003, 2.801364e-002, -2.074308e-002, 2.244687e-002, -6.912241e-002, -
6.914694e-002, 1.324279e-002, 9.845027e-002, 8.909474e-002, 2.321436e-002, 3.584646e-003, -1.597119e-003, 3.204105e-002,
1.524802e-002, -7.056092e-002, -6.465950e-003, 1.145250e-001, 1.288475e-001, 3.390513e-002, -4.039626e-002, -2.731829e-002,
3.413832e-004, 8.936599e-004, -1.118754e-002, -1.175410e-002, 1.536784e-002, -2.331168e-002, 2.232942e-002, -6.851225e-002, -
6.195199e-002, -2.484712e-002, -8.072340e-004, -1.508574e-002, -1.900046e-002, 5.088058e-003, 1.926842e-002, 1.225901e-003,
2.062393e-002, -1.117880e-002, -7.653311e-003, 3.221762e-002, 5.168694e-002, 1.817266e-002, -1.905113e-003, 1.388056e-003,
3.182775e-003, 1.095826e-002, -9.968732e-003, -5.281165e-003, 1.179008e-002, -2.536792e-002, 3.827038e-002, -2.660885e-002, -
4.874979e-002, -3.180042e-002, -3.221617e-002, -3.192704e-002, -4.648056e-002, 5.474135e-003, 7.651714e-002, 2.146465e-002, -
5.424451e-003, -2.329894e-002, -4.354581e-002, -3.848478e-002, -1.971966e-002, 6.518337e-004, 1.923888e-002, 1.609374e-002,
2.067201e-002, 2.156258e-002, -7.336140e-003, 3.857127e-003, 1.271808e-002, -2.537573e-002, 4.215622e-002, 4.175623e-002,
3.261674e-002, 5.717396e-002, 1.751072e-002, -2.952858e-002, -5.386939e-002, -1.445651e-002, 5.594915e-002, -7.241712e-003, -
7.964331e-002, -8.803913e-002, -8.107045e-002, -1.959489e-002, 3.133903e-002, 5.491999e-002, 2.681082e-002, -1.848123e-002,
1.618476e-002, 1.635454e-002, -1.216539e-002, 1.037331e-002, 1.115233e-002, -3.361490e-002, 1.589175e-002, 4.498539e-002, -
1.874774e-002, 2.196943e-002, 1.870854e-002, -8.816385e-003, -1.332474e-002, -1.041681e-002, 5.925183e-003, -3.457737e-003, -
3.706656e-002, -5.642333e-002, -2.734444e-002, 7.250645e-002, 1.404882e-001, 7.974633e-002, -3.834781e-002, -7.548932e-002, -
1.128709e-002, -7.073944e-003, -2.637395e-002, 7.284570e-003, 9.363099e-003, -3.339552e-002, -4.771970e-003, 1.974809e-002, -


© ISO/IEC 2004 — All rights reserved

Copyright International Organization for Standardization
Provided by IHS under license with ISO
No reproduction or networking permitted without license from IHS
Not for Resale

2.893766e-002, 5.792382e-002, 8.630063e-002, 3.157847e-002, -3.806760e-002, -6.128973e-002, -3.168480e-002, 1.690079e-002, 1.146013e-002, -1.261056e-002, -2.357486e-002, -3.843848e-003, 5.260299e-002, 5.348036e-002, -4.018616e-002, -6.862095e-002, -2.139953e-002, -3.653837e-002, -3.981656e-002, 1.575857e-002, -1.720395e-002, -3.115033e-002, -1.991454e-002, -6.022652e-003, -9.676816e-003, 4.267428e-002, 6.750934e-002, 3.311556e-002, -6.484223e-003, -6.659471e-003, 2.439482e-002, 6.268822e-002, 6.432678e-002, 2.862953e-002, -2.822983e-002, -4.789774e-002, -1.806257e-002, -4.580671e-003, -2.828370e-002, -1.879588e-002, -9.697327e-003, -5.158441e-002, -2.660973e-002, 3.113249e-002, -2.930510e-002, 1.117327e-003, 2.438343e-003, 2.530183e-003, -2.337295e-002, -2.712855e-002, 1.778123e-002, 3.400808e-002, 1.935027e-002, 1.024288e-002, 6.520977e-003, 1.162406e-002, 4.339878e-003, -1.610419e-002, -3.869693e-002, -3.585251e-002, -1.271312e-002, -1.175648e-002, -1.000761e-002, 1.072840e-002, 1.936309e-003, -3.502930e-002, 3.490236e-003, 3.553580e-002, -1.165984e-003, 3.955523e-002, 1.218700e-002, 2.257911e-002, 4.161124e-003, -4.662347e-002, -3.258284e-002, -3.828699e-003, 8.373831e-003, 1.352817e-002, 8.399311e-003, 9.985247e-003, 1.117469e-002, 7.809218e-003, 9.634708e-003, 2.109806e-002, 1.289905e-002, -1.280333e-002, -1.476436e-002, 2.368629e-002, 1.213497e-002, -1.984107e-002, -3.767269e-003, 1.530041e-002, 1.034400e-002, 2.642123e-002, -2.117137e-002, -1.586448e-002, 4.850192e-002, -1.634300e-002, -5.502047e-002, -3.569360e-002, -1.603533e-002, -1.065076e-002, -2.100474e-002, -3.489580e-002, -2.257803e-002, 8.521276e-003, 3.371328e-002, 3.215921e-002, -9.079051e-003, -4.561654e-002, -3.821658e-002, 2.288420e-002, 3.555198e-002, -8.219342e-003, -2.960609e-002, 2.373080e-002, -1.236038e-002, 3.998371e-002, 1.862173e-002, -3.092381e-002, 6.349891e-002, 1.478783e-002, -3.070675e-002, -2.964647e-002, -2.263521e-002, -3.595421e-002, -5.673144e-002, -7.903934e-002, -6.431846e-002, -2.000750e-002, 1.609854e-002, 7.921839e-003, -3.780416e-002, -5.215478e-002, -2.448336e-002, 2.609528e-002, 3.723725e-002, -7.494613e-003, -1.859465e-002, 3.667920e-002, -4.948172e-002, 3.206484e-002, 1.064223e-001, 4.160687e-002, 2.921601e-002, 2.002106e-003, -9.802799e-003, 9.855455e-004, 1.735685e-002, 1.329713e-002, -4.352567e-003, -3.329023e-002, -2.604958e-002, -4.953191e-003, 1.123994e-002, 9.156875e-003, -1.120265e-002, 1.353917e-005, 5.853033e-003, 2.198729e-002, 2.230813e-002, 5.400802e-004, -7.129141e-003, 3.031909e-002, -4.366626e-002, -1.961554e-002, 6.536306e-002, 4.586608e-002, -1.926491e-002, -4.288853e-002, -3.096761e-002, 1.206565e-002, 4.835021e-002, 5.726865e-002, 5.657164e-002, 4.739729e-002, 4.741580e-002, 5.060270e-002, 4.000413e-002, 4.083906e-002, 3.410572e-002, 3.345178e-002, 1.368122e-002, -1.269922e-002, -6.137110e-003, -1.826329e-002, -1.330324e-002, 1.937678e-002, -2.617105e-002, -5.905216e-002, -1.028130e-001, -7.817568e-002},
{8.365896e-003, 4.668543e-002, 7.363734e-002, 4.358245e-002, -7.783966e-002, 1.043058e-003, 1.416531e-002, 5.616299e-002, 9.762235e-002, -2.107498e-002, -6.376936e-002, -6.292908e-002, 1.712129e-002, 4.154872e-002, 1.285511e-002, -1.539430e-002, -1.318688e-003, 6.204650e-002, 8.365639e-002, 2.376098e-002, -6.281489e-002, -1.932060e-001, -1.642813e-001, -5.649685e-002, -2.440843e-002, -1.689657e-002, 1.064425e-002, 1.536605e-002, -5.661880e-002, -6.509990e-004, -2.957771e-002, 1.550966e-002, 8.078984e-002, 7.117733e-003, -1.582213e-002, -2.653765e-002, -1.812896e-002, 2.374047e-002, 4.431603e-002, 5.778320e-002, 7.344197e-002, 6.524344e-002, 6.119339e-002, 4.147152e-002, 1.509774e-002, -3.263358e-002, -7.756874e-003, -1.129183e-002, -1.046234e-001, -6.959064e-002, -8.932030e-003, -8.836765e-003, -3.727096e-002, -3.660484e-002, -4.486179e-002, -1.566311e-002, 4.980607e-002, 1.997826e-002, 1.090948e-002, 9.255255e-002, 3.330964e-002, -2.762668e-002, -4.314875e-002, -3.698315e-002, -2.518069e-002, -2.970771e-002, -1.759928e-002, 9.243222e-003, 5.951325e-002, 8.893734e-002, 9.102622e-002, -6.142132e-003, -6.702077e-002, -1.699312e-002, 2.897481e-002, -1.485986e-002, -4.460838e-002, -1.574244e-002, -9.693536e-003, -1.175453e-002, 3.426049e-002, 1.258663e-002, -5.145802e-002, 8.683498e-002, 1.506219e-001, 6.083054e-002, -3.017538e-002, -7.392498e-002, -8.351381e-002, -8.058688e-002, -5.623570e-002, -2.381276e-003, 8.330163e-002, 1.207941e-001, 1.077671e-001, 2.094478e-003, 2.926035e-002, 6.396304e-002, 4.961873e-002, -2.639450e-002, -1.945502e-002, 4.394271e-002, 4.583391e-002, -2.146763e-003, 6.485030e-003, 3.167610e-002, -8.298887e-002, -8.636450e-002, 7.946025e-002, 1.307395e-001, 7.579498e-002, 7.710406e-003, -4.931529e-002, -7.552745e-002, -6.629502e-002, 1.387012e-002, 7.487734e-002, 7.146143e-002, 6.827114e-002, 3.708974e-002, 4.340984e-002, 5.928616e-002, 8.495481e-003, -1.092526e-002, 3.990423e-002, 8.354537e-002, 5.104909e-002, -3.899220e-002, -5.486878e-002, -1.061261e-002, -6.770390e-002, -1.262525e-001, -4.507511e-002, 1.555616e-002, 4.011150e-003, -3.050108e-002, -7.152863e-002, -8.689416e-002, -5.983968e-002, -3.127476e-003, 2.928125e-002, 1.037716e-002, 6.391056e-003, 6.671801e-002, 5.037880e-002, 3.983029e-002, 3.198885e-004, 3.267938e-002, -2.074346e-003, -9.108722e-003, -3.199190e-003, -5.083570e-002, -8.907252e-002, -5.841298e-002, -6.200059e-002, -8.171350e-002, -2.608235e-003, 2.508631e-002, 7.463714e-003, -2.066516e-002, -4.578031e-002, -5.324450e-002, -3.346416e-002, -5.967118e-003, -1.861427e-002, -5.207337e-002, -4.634479e-002, 6.019594e-002, 4.287118e-002, -1.682902e-002, 2.968467e-002, 9.308688e-002, -1.584700e-002, -4.127644e-002, -2.094650e-002, -9.321031e-003, 2.841598e-002, 4.922431e-002, 9.452657e-003, -2.837015e-002, 3.471332e-002, 6.974028e-002, 5.985280e-002, 3.972139e-002, 4.066066e-003, -1.102101e-002, -5.859852e-003, -1.347183e-002, -4.007556e-002, -8.342079e-002, -7.281245e-002, 3.685951e-003, -

© ISO/IEC 2004 — All rights reserved


Copyright International Organization for Standardization
Provided by IHS under license with ISO
No reproduction or networking permitted without license from IHS
Not for Resale

2.810423e-002, -5.434910e-002, 2.630585e-002, 6.125298e-002, -4.558407e-003, -5.981632e-003, -4.007791e-002, -4.213367e-002, 6.553388e-003, 6.917735e-002, 4.290669e-002, -8.944941e-003, -8.407256e-003, 2.551925e-002, 3.879249e-002, 3.707316e-002, 2.406208e-002, 2.836758e-003, 1.660965e-003, -2.216429e-002, -3.741248e-002, -7.293953e-002, -5.997841e-002, -5.165511e-002, -3.953731e-002, -1.109903e-002, -1.233466e-003, -1.026863e-002, 2.966570e-002, 1.759114e-002, -2.807482e-002, -4.982762e-003, 7.377446e-002, 9.961571e-002, -1.284772e-002, -5.400164e-002, -5.061877e-002, -2.416226e-002, 9.970537e-003, 1.737338e-002, 1.731940e-002, 1.370052e-002, 9.200792e-003, -1.992572e-002, -1.064354e-002, -2.451685e-002, -1.938708e-002, -8.227198e-002, 2.075940e-002, 4.165706e-002, -4.429601e-003, -4.165192e-002, -4.021718e-002, -3.005807e-002, -2.796592e-002, -2.757437e-002, -2.943015e-002, -8.939698e-003, -2.415138e-002, -2.855734e-002, -4.333272e-002, -3.310652e-002, 2.841799e-004, 1.053262e-002, 1.349949e-002, 1.743474e-002, 1.557027e-002, -5.250682e-003, 3.019339e-002, 4.042270e-002, 3.236454e-002, -5.175439e-002, 3.254657e-002, 2.354872e-002, 2.206043e-002, 2.392068e-002, 1.663499e-002, -1.133409e-002, -1.562051e-002, -4.167642e-002, -7.077495e-002, -2.754010e-002, 3.239317e-002, 2.960829e-002, -1.047761e-002, -3.181067e-002, -1.055757e-002, 1.035453e-002, 2.081879e-002, 8.799343e-003, -1.033683e-002, -1.124991e-002, 4.643243e-002, 6.364293e-002, 6.013433e-002, 3.367092e-002, -2.215355e-002, -1.927090e-002, -1.877878e-003, 1.165282e-002, 2.579833e-003, -2.569076e-002, -3.514989e-003, -1.106132e-003, -1.255348e-002, 3.485680e-002, 7.740001e-002, 6.882263e-002, 3.956497e-003, -6.224280e-002, -3.740925e-002, 1.760832e-002, 3.575761e-002, -8.483775e-003, -5.300457e-002, -2.998746e-002, 3.807308e-002, 3.120668e-002, 2.106140e-002, 7.488808e-002, -3.496553e-002, -2.330293e-002, -2.530734e-002, -3.191941e-002, -3.709127e-002, -2.129794e-002, 1.490166e-002, 6.232715e-002, 3.920766e-002, 2.711400e-002, 1.943289e-002, 1.104588e-002, -1.439920e-002, -4.717167e-002, -5.141137e-003, 5.092846e-002, 4.766027e-002, -3.551374e-002, -8.817493e-002, -4.551197e-002, -1.995796e-003, -2.082892e-002, -3.903534e-002, 4.172389e-002, -1.151480e-002, 2.925887e-002, 1.793159e-003, -3.695334e-002, -4.013845e-002, -6.781303e-003, 2.794441e-002, 5.027462e-002, 4.566336e-003, -2.379803e-002, -6.604454e-002, -7.732760e-002, -2.301787e-002, 1.597876e-002, 3.278148e-002, 7.492415e-002, 4.952011e-002, -5.862157e-002, -8.914927e-002, -4.758881e-002, -4.824637e-002, -2.960963e-002, -4.312607e-002, -1.334919e-002, -1.444325e-003, 5.761858e-002, 3.913841e-002, 6.442888e-003, -2.246776e-003, -1.394747e-002, -1.373800e-002, 4.397064e-003, -6.250669e-003, 2.611539e-003, 9.788147e-003, 2.126026e-002, 5.357773e-002, 3.442515e-002, -1.886207e-003, 3.576040e-002, 2.443936e-002, -5.964912e-002, -6.232621e-002, -4.565170e-002, -4.780823e-002, 1.103396e-002, 2.227154e-004, -3.744251e-002, 1.569828e-002, 4.058657e-002, 1.192644e-002, 8.460918e-003, 1.468878e-002, 4.192613e-003, -8.763724e-003, -1.797792e-002, -2.450384e-002, -2.430698e-002, -2.029590e-002, -3.885330e-003, 2.622723e-002, -1.681525e-005, -1.869486e-002, 1.823317e-003, 2.231421e-002, 1.047795e-003, 2.869061e-003, -2.215325e-002, -1.227658e-002, 7.536702e-002, 5.140904e-002, -1.699070e-002, 3.436985e-002, 2.951497e-002, -8.001511e-003, -2.093987e-002, -1.253359e-002, -2.567874e-003, -1.779480e-003, -2.159454e-003, -3.322201e-003, 8.019016e-004, -8.466641e-004, 4.545004e-004, 9.650162e-003, 9.128075e-003, 4.898432e-003, 2.432668e-002, 6.455904e-002, 7.568778e-002, 4.923865e-002, 8.578628e-003, 1.268526e-002, 6.332737e-002, 1.455699e-002, 2.023722e-003, 2.135592e-002, 1.520022e-002, 1.892280e-003, -1.309972e-002, -2.592718e-002, -2.554620e-002, -1.781696e-002, -2.252225e-003, 1.475217e-003, -9.375162e-004, -8.649376e-003, 1.006578e-003, 1.198549e-002, 8.173300e-003, 5.343293e-004, 3.217503e-002, 7.749043e-002, 9.475810e-002, 6.859464e-002, 2.761702e-002, -1.608259e-002, 1.322851e-002, -2.695556e-002, 6.239280e-003, 9.720339e-003, -1.412239e-002, -2.426813e-002, -1.865456e-002, -1.064162e-002, -1.322280e-004, 3.659423e-003, 1.079902e-002, -1.051460e-003, -2.825107e-002, -3.445780e-002, -1.619683e-002, 2.993289e-004, -5.183270e-003, -1.120152e-002, 1.833563e-002, 4.055393e-002, 5.113660e-002, 6.018673e-002, 3.550920e-002, -4.726796e-002, -1.802136e-002, -1.704473e-002, 6.720449e-003, 1.634588e-002, -2.563154e-002, -4.922576e-002, -4.864125e-002, -3.260362e-002, -1.522727e-002, 5.115525e-003, 9.164239e-003, -9.743502e-003, -1.936935e-002, -3.797152e-003, 1.216895e-002, 5.610517e-003, -1.697187e-002, -2.136853e-002, -7.169671e-003, -1.357714e-002, -2.718185e-002, 4.057455e-002, 4.226741e-002, -2.105299e-002, 2.235480e-002, 1.477775e-002, 1.340152e-002, 3.023758e-002, -1.566291e-002, -3.864868e-002, -3.055689e-002, -7.206915e-004, 2.225762e-002, 2.745421e-002, 2.971001e-002, 3.182305e-002, 4.333523e-002, 5.251551e-002, 4.003823e-002, 4.506061e-003, -2.612016e-002, -2.003974e-002, -2.182707e-002, -8.202225e-002, -7.357009e-002, 2.953376e-002, 2.158765e-002, 1.731288e-002, 1.923576e-002, -1.178555e-003, -3.465160e-003, 3.141946e-002, -1.832970e-003, -2.145745e-002, -1.926615e-003, 2.116587e-002, 4.938144e-002, 5.235514e-002, 4.904778e-002, 3.984247e-002, 4.723903e-002, 3.355969e-002, -8.540585e-003, -4.279717e-002, -4.237210e-002, 3.334818e-003, -9.651024e-003, -6.804325e-002, -4.233813e-002, 2.474636e-002, 1.307075e-006, 4.134086e-002, 1.087405e-002, -5.360092e-002, -5.020052e-002, -3.516219e-003, -2.224098e-002, -2.380832e-002, -1.122216e-002, 4.835478e-004, 2.500546e-002, 2.619261e-002, 1.386443e-002, -1.160131e-002, -2.257474e-002, -5.221131e-002, -9.017669e-002, -8.845061e-002, -4.303834e-002, 1.608548e-002, 1.735326e-002, 6.696817e-003, 2.328328e-002, 1.686145e-002, -2.094377e-002, 4.548280e-003, 1.628032e-002, -2.633343e-002, -3.826900e-002},


© ISO/IEC 2004 — All rights reserved

Copyright International Organization for Standardization
Provided by IHS under license with ISO
No reproduction or networking permitted without license from IHS
Not for Resale

{1.989254e-002, -6.760328e-002, -8.781489e-002, -1.615985e-002, 2.692405e-002, -1.818688e-002, 9.751909e-002, 1.403533e-001, 3.852791e-002, -1.381235e-001, -3.473070e-003, -1.411448e-002, -5.780904e-002, 1.002300e-002, 9.890812e-002, 1.241799e-001, 8.165654e-002, -2.342430e-002, -9.848042e-002, -5.418292e-002, -2.263973e-002, -3.242958e-002, -2.592221e-006, -6.586253e-003, 4.652938e-002, 1.093470e-002, -1.386556e-004, 2.685070e-002, 1.174109e-002, -6.979423e-002, 3.646751e-002, 6.971263e-002, 4.175855e-002, -1.130424e-001, -1.350993e-002, 5.705469e-002, -2.178244e-002, -2.721122e-002, 1.233407e-002, 1.948997e-002, -6.158352e-003, -6.741067e-002, -9.084112e-002, -2.495312e-002, 1.922518e-002, -2.766465e-004, 2.861410e-002, 2.851150e-002, 4.332543e-002, 2.618703e-002, 9.980898e-003, 3.951971e-002, -3.126350e-002, -8.235121e-002, -1.962389e-002, 2.068278e-004, 9.034243e-003, -3.955401e-002, -4.630854e-002, 1.010506e-001, 3.746188e-002, -3.095439e-002, -4.410371e-002, -3.711335e-002, -3.543172e-002, -4.488570e-002, -4.702874e-002, 3.001400e-002, 6.299899e-002, 2.778499e-002, 4.366614e-002, 5.046036e-002, -4.136970e-003, -1.874309e-002, 4.337257e-004, 4.646172e-002, -6.528645e-002, -7.771647e-002, -3.376367e-002, -2.285019e-002, -3.965186e-002, 1.094203e-002, -5.825970e-003, 5.863626e-002, 6.289622e-002, 6.043508e-003, -2.710068e-002, -2.555876e-002, -5.895619e-003, 5.275993e-003, 8.441746e-003, 5.875860e-002, 7.282684e-002, 1.949418e-002, 3.251590e-002, 3.056264e-002, -8.330804e-002, -6.250002e-002, 4.877215e-002, 5.779369e-002, -5.682336e-002, -2.492330e-002, 2.427982e-002, -7.797200e-003, -5.637324e-002, 9.924297e-003, 9.023892e-002, 6.987582e-002, 3.261821e-002, 3.869603e-003, -7.780156e-003, -3.098173e-003, 1.406056e-002, 2.395766e-002, 2.636849e-002, 6.164267e-002, 6.387053e-002, -2.333176e-003, 4.627349e-003, -5.181436e-003, -1.008488e-001, -2.444836e-002, 8.994779e-002, 3.918876e-002, -4.407061e-002, 4.573924e-002, 9.667592e-002, 3.148584e-002, -2.457103e-002, -4.138479e-002, 4.672151e-002, 1.143156e-001, 1.102531e-002, -5.846602e-002, -5.901495e-002, -3.359480e-002, 9.159125e-004, 2.661285e-002, 1.006124e-002, 1.092668e-002, 2.728923e-002, -2.775741e-002, -1.378629e-002, -5.910001e-003, -8.217016e-002, -1.855887e-002, 4.117739e-002, -3.211929e-002, -9.691274e-002, 4.442926e-002, 7.300990e-002, -1.156870e-002, -1.878834e-002, -6.224600e-002, -1.022270e-001, 3.539477e-002, 1.376105e-002, -5.750624e-002, -6.497080e-002, -4.134170e-002, -3.765071e-003, 7.795451e-003, -2.494887e-002, -1.750909e-002, 5.611502e-003, -3.577749e-002, -1.686097e-002, 1.996289e-002, -7.977092e-002, -2.669235e-002, 3.144667e-002, -1.404527e-002, -3.377581e-002, 5.847604e-002, 3.685608e-003, -6.814615e-002, 1.999643e-002, 7.107355e-002, -4.172619e-002, 1.563906e-003, 5.606934e-003, -2.799856e-002, -2.854960e-002, -1.993426e-003, 2.517446e-002, 1.604276e-002, -2.772746e-002, -1.442785e-002, 1.998652e-003, -2.042938e-002, 2.464520e-003, 6.353848e-002, -4.304218e-002, -4.122721e-003, 7.113485e-002, 4.433056e-002, -5.302863e-002, 4.848173e-003, 1.285676e-002, -2.824998e-002, -7.921002e-003, 3.385669e-002, 4.387690e-002, 5.992854e-002, 7.916884e-003, -1.538118e-002, 1.815624e-002, 6.232798e-002, 9.103112e-002, 4.905266e-002, 1.653005e-003, -1.440587e-003, 8.076603e-003, -8.986078e-003, 1.034126e-002, 5.085641e-002, -2.953708e-002, -1.401151e-002, 1.718636e-002, 1.654302e-002, -1.892718e-002, -2.122377e-002, -6.062840e-002, -4.034424e-002, 3.199439e-002, 3.114011e-002, -3.388063e-004, 1.174424e-002, -2.216154e-002, -3.656097e-002, 1.571738e-002, 7.854999e-002, 1.026598e-001, 4.323274e-002, -5.576492e-004, -1.348542e-002, -1.152204e-002, -1.743087e-002, -2.622271e-002, 1.022971e-002, -8.734047e-003, -2.436223e-002, -5.840645e-002, -2.621321e-002, 4.480043e-002, 3.528580e-002, -5.199283e-002, -5.728420e-002, 1.675818e-002, 6.413834e-002, 3.297470e-003, -2.765393e-002, -1.484836e-002, -1.809659e-002, 5.098528e-003, 7.713258e-002, 6.963313e-002, 4.980684e-004, -2.626552e-002, -3.932803e-002, -2.442506e-002, -3.594682e-002, -7.637815e-002, -3.907996e-002, 4.345526e-002, -8.825846e-004, -6.004986e-002, -2.879544e-002, 4.188483e-002, 8.812513e-002, 4.045280e-002, -2.420387e-002, -7.237868e-003, 1.739567e-002, -2.503338e-002, -5.107806e-002, -1.251061e-002, 1.571466e-002, 2.421222e-002, 4.977510e-002, 8.069347e-003, -4.399447e-002, -5.449710e-002, -6.245944e-002, -2.779118e-002, -3.078757e-002, -5.299708e-002, -3.722727e-002, 8.295471e-002, 3.145358e-002, -3.640651e-002, -4.427091e-002, 3.368775e-003, 5.846441e-002, 4.214345e-002, -1.722022e-002, -1.834714e-003, 2.349397e-002, -2.443479e-002, -6.834789e-002, -5.094079e-002, 5.871322e-003, 5.011309e-002, 3.004519e-002, -4.196644e-002, -6.676289e-002, -5.603191e-002, -6.253312e-002, -1.183831e-002, 1.754706e-003, 5.045012e-003, -4.760281e-002, 6.918503e-002, -2.255155e-002, -6.125139e-002, -4.168267e-002, 6.989699e-003, 2.582773e-002, 3.992191e-002, 1.444435e-002, 8.236614e-003, 4.503790e-002, 2.342647e-002, -1.677713e-002, -6.151214e-002, -4.524746e-002, 1.239974e-002, -2.708980e-003, -5.650510e-002, -4.005671e-002, -3.211027e-002, -4.827363e-002, 9.371362e-003, 3.030863e-002, 4.489586e-002, -4.977571e-002, 4.397268e-002, -4.558531e-002, -4.222191e-002, 9.644143e-003, 4.428436e-002, 4.709367e-002, 7.939971e-002, 4.649157e-002, -9.216727e-003, -3.845297e-002, -4.928219e-002, -5.881775e-002, -5.179126e-002, -4.955619e-002, -4.581161e-002, -5.877871e-002, -4.569787e-002, 1.400656e-002, 1.606359e-002, -9.114728e-003, 5.302407e-002, 3.504441e-002, 6.775860e-002, -1.976436e-002, 9.298403e-002, 1.057914e-002, -6.578379e-002, -7.798141e-002, -4.946626e-002, 1.703016e-002, 4.762935e-002, 1.954615e-002, -6.258791e-003, -3.308402e-002, -4.136549e-002, -6.065425e-004, 6.605879e-002, 7.339215e-002, 6.551675e-003, -4.442046e-002, -2.468530e-003, 6.604972e-002, 4.627052e-002, 3.176637e-002, 7.130127e-002, 9.325584e-003, 5.777771e-002, 5.888021e-003,

© ISO/IEC 2004 — All rights reserved


Copyright International Organization for Standardization
Provided by IHS under license with ISO
No reproduction or networking permitted without license from IHS
Not for Resale

8.276686e-002, 6.085860e-002, 2.765141e-002, -7.822750e-003, -1.151300e-002, 4.159374e-004, 7.091822e-003, 4.740178e-003, 2.636419e-003, -1.915759e-002, -3.785684e-002, -1.389877e-002, 2.608674e-002, 2.196383e-002, -1.434240e-002, -2.354505e-002, 3.959555e-002, 8.417823e-002, 4.352406e-002, 5.449209e-002, 5.520185e-002, -2.823140e-002, 3.232600e-002, -2.125712e-003, 4.718860e-002, 3.145714e-002, 2.306092e-002, 2.006959e-002, 1.308292e-002, -1.204771e-002, -2.821769e-002, -5.516093e-002, -6.057305e-002, -4.234143e-002, -1.527617e-002, 1.922903e-002, 3.337304e-002, 5.664112e-003, -2.486017e-002, 2.469686e-004, 4.624320e-002, 4.284101e-002, 7.067958e-003, 3.342955e-002, 2.068285e-002, -6.166449e-002, 4.783676e-003, -2.558413e-002, 3.972196e-002, 1.457737e-002, -9.706418e-003, -5.213857e-003, 1.482568e-002, 2.412631e-002, 3.670869e-002, 2.240226e-002, 5.935906e-003, 5.694488e-003, 2.847755e-002, 4.864340e-002, 5.392380e-002, 3.738686e-002, 1.683051e-002, 2.543791e-002, 3.357170e-002, -2.647271e-002, -5.306160e-002, -3.210001e-002, 1.959587e-003, -4.603412e-002, 1.218169e-002, -1.338644e-002, 2.524494e-002, 2.500842e-002, -6.153398e-003, -3.180338e-002, -3.914687e-002, -4.193518e-002, -2.614919e-002, -1.687113e-002, -1.354457e-002, -9.784478e-003, 1.908473e-003, 2.748343e-003, -3.376561e-003, -6.861343e-003, 1.640861e-004, 8.148301e-003, -1.707086e-002, -5.724480e-002, -8.011958e-002, -6.028758e-002, -7.988750e-003, -1.696689e-002, 4.635601e-003, 1.935195e-002, -3.019502e-003, 1.943347e-002, 2.474046e-002, 1.944341e-002, 5.207261e-003, 7.085484e-003, 2.247104e-002, 2.481845e-002, 2.560943e-002, 1.140753e-002, -1.057168e-002, -3.236988e-002, -4.836040e-002, -4.694601e-002, -3.848569e-002, -2.910789e-002, -2.550307e-002, -1.168046e-002, -3.206561e-002, -3.103245e-002, -2.453350e-003, 1.824423e-002, -2.323825e-002, 1.148470e-002, -2.761308e-002, -2.420585e-002, -6.938572e-003, 4.412979e-004, -9.708778e-004, 4.784791e-003, 2.421151e-002, 1.487005e-002, -1.950028e-003, -2.274021e-002, -3.864373e-002, -5.340466e-002, -6.367817e-002, -5.787762e-002, -5.246163e-002, -3.649519e-002, 1.062946e-002, 3.687424e-002, 2.582197e-002, 1.632454e-002, -1.334930e-002, 3.354393e-002, -3.262765e-003, 1.610005e-002, 1.025728e-003, -5.739626e-002, -5.320201e-002, -4.087806e-002, -3.283614e-002, -1.927158e-002, -3.928869e-003, -1.863160e-002, -3.082888e-002, -3.822836e-002, -2.933887e-002, -1.073249e-002, 4.900986e-003, 5.166319e-003, -1.760908e-002, -3.027372e-003, 3.679936e-002, 3.361032e-002, 4.595734e-002, 5.570659e-002, -1.934895e-002, 2.832289e-002, 2.270615e-002, 1.502068e-002, 9.130363e-002, 6.469417e-003, -2.910683e-002, -1.600400e-002, 2.429784e-003, 1.777932e-002, 2.380595e-002, 9.681622e-003, 1.274761e-002, 2.289040e-002, 5.533575e-002, 9.945704e-002, 1.106532e-001, 9.330258e-002, 5.293682e-002, 2.497461e-002, 1.549821e-002, -3.243194e-002, -3.225446e-002, 2.736904e-002, -2.028012e-002, -1.457498e-002, -4.029748e-002, -4.139526e-002},
{-3.373750e-002, -2.508679e-002, -2.023857e-002, -4.856328e-002, -7.091331e-002, -1.329795e-002, 8.464505e-002, 1.581451e-001, 1.028169e-001, -2.026053e-002, -5.884506e-002, 7.279004e-003, 9.418813e-002, 1.275261e-001, 6.828536e-002, -2.896144e-002, -2.972787e-002, 3.944681e-002, 4.438974e-002, -9.109017e-003, 2.313401e-002, 5.227252e-002, -8.246758e-002, -6.532047e-002, -1.575554e-002, 7.606572e-003, 1.614697e-002, -5.970618e-003, -5.107234e-006, -3.835976e-003, 4.033829e-002, 8.035514e-002, 4.477678e-002, -7.871047e-003, -5.836677e-002, -7.789630e-003, 3.812331e-002, 6.102161e-002, 3.369451e-002, -1.243279e-002, -2.660375e-002, -3.853495e-003, -2.460282e-003, -8.804993e-003, 2.836825e-002, 5.319715e-002, -4.869871e-002, -3.262877e-002, 2.690444e-003, 2.389727e-002, 2.426938e-002, 9.259174e-003, 3.832107e-003, -2.590453e-002, -3.130751e-002, -6.907552e-003, -3.101539e-002, -2.159162e-002, -2.349800e-002, 4.472762e-004, 3.722588e-003, -6.632977e-003, -4.126239e-002, -7.834975e-002, -8.045633e-002, -4.780924e-002, -3.061290e-002, -1.713087e-002, 1.977524e-002, 4.300644e-002, 1.550251e-003, 5.069607e-003, 2.292492e-002, 3.085796e-002, 6.193058e-003, 4.537911e-003, -7.583418e-003, -2.157191e-002, -6.763404e-002, -6.621133e-002, -7.664337e-002, -4.886466e-002, 2.628077e-002, 3.851540e-003, 5.737832e-003, 6.427004e-003, -1.820235e-002, -5.215411e-002, -4.937935e-002, -1.165334e-002, -6.672610e-003, -1.638901e-002, 5.817088e-004, 3.805015e-003, 2.282925e-002, 2.616299e-002, 6.554564e-003, -2.707533e-002, -3.187771e-002, 6.797716e-003, 3.765843e-002, 1.934489e-003, -5.803715e-002, -5.593031e-002, -5.796812e-002, -4.054728e-002, 3.651834e-002, 5.316353e-002, -1.284997e-002, -1.145704e-002, 1.400982e-002, 1.752681e-002, 2.233606e-002, 3.159636e-002, 2.528550e-003, -2.911255e-002, -1.903851e-002, -2.686956e-002, 1.700231e-002, 3.673516e-002, -4.591306e-002, -4.238179e-002, 4.258009e-002, 7.886332e-002, 5.694066e-002, 2.898749e-002, -3.153821e-002, -1.564550e-002, 1.274784e-002, 3.915585e-002, 5.128762e-002, 8.066565e-002, 4.383572e-002, -9.049042e-003, -7.489683e-004, 1.986792e-002, 3.191988e-002, 3.199826e-002, -5.498693e-003, -3.420875e-002, -2.324852e-002, -3.655266e-002, 1.737447e-003, 3.307883e-002, -8.359962e-002, -1.340549e-002, 1.061256e-001, 3.137724e-002, -5.199552e-003, -8.071560e-003, -1.954898e-002, 2.871577e-003, 1.394723e-002, 5.310458e-002, 4.798465e-002, -3.220052e-003, -1.614195e-002, -7.429450e-004, 3.366798e-002, 4.782199e-002, 5.546464e-002, 3.464679e-002, -1.190954e-002, -3.817854e-002, -1.316929e-002, -3.422918e-002, -5.779286e-003, 1.629345e-002, -9.414830e-002, 4.060386e-003, 7.479315e-002, -1.186027e-002, -5.977519e-002, -8.601885e-002, -5.878857e-002, 2.945213e-002, 3.337190e-002, 1.625447e-003, 1.993543e-003, -4.485508e-002, -1.096284e-001, -1.041600e-001, -6.414090e-002, -3.470511e-002, -1.621119e-002, -2.250095e-002, -4.662214e-002, -2.909600e-002, 1.596689e-002, -1.782247e-002, -6.435148e-003, -1.300450e-002, -


© ISO/IEC 2004 — All rights reserved

Copyright International Organization for Standardization
Provided by IHS under license with ISO
No reproduction or networking permitted without license from IHS
Not for Resale

3.740507e-002, 1.617882e-002, -7.437719e-004, 2.502782e-002, 4.537522e-002, -3.444005e-002, -4.406332e-002, 1.972932e-002, 2.764872e-002, -7.463989e-003, 2.756760e-002, 3.302657e-002, -3.962344e-002, -6.085130e-002, -3.866501e-002, -1.504402e-002, 3.318256e-003, -4.443720e-003, -1.153577e-002, 2.836957e-002, 5.643494e-002, 1.043414e-002, 1.310161e-002, -3.935995e-002, 2.123036e-002, 1.376124e-002, -6.212112e-002, -1.408596e-002, 7.831463e-002, 3.948462e-002, 3.242554e-002, 5.252144e-002, 2.819011e-002, -4.065635e-002, -4.129995e-002, 2.784887e-003, 1.263968e-002, 1.117628e-002, 2.944598e-002, 4.817850e-002, 5.890605e-002, 4.120455e-002, 3.677227e-002, 7.477815e-002, 7.330194e-002, 2.621619e-002, 6.771546e-003, -4.179032e-002, 4.529748e-002, 1.808018e-002, -2.250338e-002, -2.073101e-002, -3.467867e-002, -3.348085e-002, 7.428747e-002, 8.266186e-002, -3.855775e-002, -8.874460e-002, -6.627083e-002, -2.362264e-002, -5.110924e-003, 5.798104e-003, 3.210218e-002, 5.296519e-002, 6.387875e-002, 3.368678e-002, 5.073623e-002, 8.500754e-002, 6.956753e-002, 2.504942e-002, -4.289896e-003, -4.604702e-002, 1.904214e-002, 2.341114e-002, 3.653279e-002, 4.299148e-002, -1.226459e-002, -4.459206e-002, 3.661707e-002, 1.085876e-002, -6.518540e-002, -8.552925e-003, 5.052457e-002, 5.182702e-002, -4.566486e-004, -3.667325e-002, -2.133589e-002, 4.271823e-003, 1.513860e-002, -8.033612e-003, 3.126352e-002, 5.267853e-002, 4.154498e-002, 8.832324e-003, -2.737635e-002, -2.679654e-002, -6.440146e-002, 2.115443e-003, 4.929728e-002, 4.129373e-002, -1.481481e-002, -5.102180e-002, 3.193819e-003, -3.599900e-002, -5.625880e-002, 4.828728e-002, 1.112404e-001, 1.071366e-001, 3.202393e-002, -6.337770e-002, -7.611235e-002, -3.875407e-002, -4.227737e-002, -4.866043e-002, -3.102471e-003, -3.896076e-003, 1.819477e-002, -9.787435e-003, -2.211760e-002, 9.885286e-003, -1.034223e-001, 9.556694e-004, 4.469398e-002, 2.266339e-002, -2.352941e-002, -2.511149e-002, 2.290525e-002, 1.760762e-002, 1.358412e-002, 1.696584e-002, 3.624413e-002, 4.105692e-002, 4.099765e-004, -4.085747e-002, -3.697064e-002, -2.063445e-002, -4.456723e-002, -5.724353e-002, -3.592390e-002, -6.130729e-002, -3.018438e-003, 1.141398e-002, 2.340255e-002, 5.087782e-002, -6.550025e-002, 5.094175e-002, 4.620877e-002, -4.452022e-004, -2.295214e-002, 2.532595e-004, 3.535024e-002, 5.562303e-002, 1.788335e-002, -3.916641e-002, -8.925429e-002, -9.475452e-002, -4.852400e-002, -6.322535e-003, 3.923138e-002, 6.133243e-002, 3.082796e-002, -1.769922e-002, -4.490202e-002, -7.141045e-002, 8.751224e-003, 3.702406e-002, 4.149234e-002, 2.730571e-002, -9.877562e-002, -3.087259e-003, 3.788188e-002, 3.772560e-002, 1.397195e-002, -2.502406e-002, -2.639830e-002, -1.383524e-002, -3.221818e-002, -3.915061e-002, -1.254530e-002, 1.391832e-002, 4.860514e-002, 2.649230e-002, 2.179782e-002, 8.011257e-002, 8.910287e-002, 2.702830e-002, -2.769898e-002, -4.307115e-002, 3.977644e-002, 5.999139e-002, 1.255847e-002, -2.263478e-002, -8.605170e-002, -2.240294e-002, 2.214596e-002, 4.081094e-002, 3.520852e-002, 3.404661e-002, 4.117444e-002, 2.157662e-002, -1.450341e-002, -3.503506e-002, -3.215486e-002, -2.017181e-002, 1.494187e-002, -8.122250e-003, -4.261449e-002, 7.617725e-003, 7.130835e-002, 4.533299e-002, 3.493381e-003, 9.205421e-003, 3.595119e-002, 6.662495e-002, 1.156802e-002, -2.763657e-002, -3.453549e-002, -3.749475e-002, -8.091360e-002, -1.112702e-001, -7.714200e-002, -2.113437e-003, 5.915261e-002, 7.050333e-002, 4.170417e-002, -5.701770e-003, -5.644131e-002, -7.418990e-002, -4.311867e-002, -1.490705e-002, -3.161261e-002, -2.841833e-002, 1.556570e-002, 3.921895e-002, 2.903618e-002, 2.184613e-002, -1.014038e-003, 2.777781e-002, 2.593195e-002, -1.332424e-002, 4.377860e-002, 4.731501e-002, -2.316505e-003, -6.751509e-002, -7.447708e-002, -2.215353e-002, 4.711727e-002, 8.792274e-002, 7.644981e-002, 2.686501e-002, -1.923317e-002, -4.110554e-002, -1.623753e-002, 1.950339e-002, -2.381668e-003, -3.648265e-002, -2.437786e-002, 2.179786e-002, 2.885238e-002, -2.281457e-002, -5.091603e-002, -2.938389e-002, 3.084803e-002, -3.026129e-002, 6.980976e-002, 1.033736e-001, 6.802325e-002, -7.920616e-003, -4.641875e-002, -3.865025e-002, 1.159231e-002, 6.203197e-002, 5.887481e-002, 4.100713e-004, -5.205277e-002, -5.031645e-002, -7.949560e-003, 2.149011e-002, -1.172281e-002, -4.829547e-002, -4.491846e-002, -1.900881e-002, -1.660412e-002, -6.199887e-002, -7.911588e-002, -6.229875e-002, 4.401049e-002, -4.622904e-002, 3.181591e-002, 6.592853e-002, 5.604444e-002, -1.330405e-004, -3.174643e-002, -2.710009e-002, 2.496171e-002, 5.704390e-002, 3.329880e-002, -2.300134e-002, -4.933336e-002, -3.232848e-002, 4.130915e-003, -1.714843e-003, -1.676026e-002, -2.371029e-002, -3.530732e-002, -5.102175e-002, -5.161880e-002, -3.757867e-002, -3.365508e-002, -4.860150e-002, 3.873412e-002, -5.439468e-002, -9.256003e-003, 6.672944e-003, 6.525502e-003, -1.763329e-002, -2.738769e-002, -8.038631e-003, 3.357518e-002, 6.215419e-002, 3.604278e-002, -1.375531e-003, -3.265177e-003, 2.060291e-002, 2.452474e-002, -6.864572e-004, 1.341701e-002, 2.855880e-002, -9.335149e-003, -5.247061e-002, -3.362256e-002, 2.293997e-002, 4.458290e-002, 3.339285e-003, 3.333350e-002, -3.518937e-002, -5.982354e-003, -1.281178e-002, -2.451574e-002, -2.492856e-002, -2.053054e-002, -9.258273e-003, 3.044673e-003, 1.550208e-002, -8.252589e-003, -1.638615e-002, 1.662444e-003, 2.045463e-002, 5.017361e-003, -1.304972e-002, 3.795795e-002, 7.957304e-002, 2.509234e-002, -2.855219e-002, -3.670689e-002, 8.062248e-003, 8.798968e-002, 6.274588e-002, 5.037498e-002, -1.929602e-002, 1.676353e-002, 1.498857e-002, -1.685321e-002, -2.598892e-002, -1.244093e-002, -4.035753e-003, -7.295269e-004, -1.683071e-002, -3.934219e-002, -3.862631e-002, -1.470141e-002, -1.757821e-002, -3.876606e-002, -2.896233e-002, 4.195547e-002, 8.737227e-002, 4.452146e-002, -1.976994e-002, -7.418442e-002, -4.882342e-002, -6.626123e-003, 2.509777e-002, 3.067338e-002, -3.291624e-002}

© ISO/IEC 2004 — All rights reserved


Copyright International Organization for Standardization
Provided by IHS under license with ISO
No reproduction or networking permitted without license from IHS
Not for Resale

};

mean vector $m_1^c$ [40]={
-5.969526e+001, -4.348411e+002, 2.579644e+002, -6.947467e+001, -6.987493e+001, 6.921606e+001, -3.074396e+000, 5.848226e-001, 6.623573e+001, 1.811579e+000, 1.755871e+001, 5.319489e+001, 1.203037e+000, -4.307530e+001, 8.445625e+000, 1.262470e+001, -3.642349e+000, -4.302394e+000, 1.275426e+001, 5.172384e+000, 6.300429e+000, -1.390110e+001, 2.189528e+001, -2.519893e+001, -1.383146e+001, -3.898610e+000, -1.234405e+000, 7.916902e+000, -3.726472e+000, -2.123369e+000, 1.070704e+001, 1.519830e+001, -9.650487e+000, 9.848140e+000, -6.253802e-001, -4.442358e+000, 5.478909e+000, 1.044414e+001, 5.154420e+000, 1.696616e+000};

mean vector $m_2^c$ [40]={
-2.298766e+002, 2.874538e+002, 1.945398e+002, -1.985566e+001, -5.497247e+000, 3.698843e+001, -1.288854e+001, -1.784581e+001, -1.316702e+001, 2.964215e+001, -2.233740e+001, -9.715434e+000, 1.243476e+001, -1.106720e+001, -9.558149e+000, 2.666818e+000, -1.270359e+001, -2.457805e+000, -2.170440e+001, -2.936774e+000, 4.896013e+000, -1.320558e+000, -4.111363e-001, -1.219540e+000, -5.137625e+000, -4.728569e-001, -7.603963e+000, 1.230643e+000, -3.351722e+000, -5.715230e+000, -1.792559e+000, -2.260919e+000, -2.622694e+000, -6.505183e+000, -5.381213e+000, 1.156880e+001, -5.018980e+000, -1.107507e+001, 5.851623e+000, -6.065300e+000};

mean vector $m_3^c$ [40]={
2.080868e+002, 3.175416e+002, 1.972111e+002, -3.098851e+001, -1.215821e+001, 1.352857e+001, 2.760466e+001, 1.218920e+001, -4.334664e+001, 2.415540e+001, -2.327852e+001, -3.165369e-001, 8.615949e+000, 6.077727e+000, -1.514916e+001, -5.386451e+000, -1.818975e+001, 5.927587e+000, -1.196064e+000, -2.258766e+001, -2.722512e+000, -2.890144e+000, -1.262299e+001, -1.404744e+000, -7.695228e+000, 2.454565e+000, -4.652352e+000, -9.050396e+000, -5.364719e+000, 4.741573e-001, 3.528616e-001, 5.370065e+000, -8.933003e+000, 3.326792e+000, 9.957672e+000, 7.052777e+000, -3.787927e+000, -6.915388e+000, -3.436330e+000, -1.448747e+000};

mean vector $m_4^c$ [40]={
-3.469236e+002, -2.855553e+002, 7.417123e+001, -6.354483e+001, 4.463090e+001, -1.542068e+001, 8.882387e+000, -2.292752e-001, -4.631114e+000, 6.452957e+000, 7.703835e-001, 1.458505e+001, 1.103329e+001, -8.942817e+000, 1.062362e+001, -1.009869e+000, 1.273953e+000, -4.591592e+000, 1.155132e+001, 5.778990e+000, -1.184914e+000, -9.907776e+000, 5.451775e-001, -3.478512e+000, -9.035897e+000, -1.045305e+001, -4.232146e+000, -4.380708e+000, -4.190186e+000, -3.215231e+000, -2.093342e-001, 4.282376e+000, -1.121094e+001, 2.568317e-001, 2.368948e+000, -3.842007e+000, 4.350718e+000, -5.061296e+000, 2.821806e-001, 9.866649e+000};

mean vector $m_5^c$ [40]={
-3.552831e+002, 2.546942e+002, -8.957103e+001, -8.381412e+001, -5.766323e+001, -2.854429e+001, -1.756425e+001, -1.296938e+001, -1.503811e+001, 1.121606e+001, 9.412407e+000, 8.925465e+000, 1.720809e+001, -5.203553e+000, -4.874949e+000, 4.878536e+000, -9.206397e+000, -2.023007e+000, 1.520317e+000, 7.515757e+000, 1.063444e+001, 6.153319e+000, 3.504120e+000, 8.431301e-001, 1.415662e+001, -1.829260e+000, 1.916151e-001, 6.956549e+000, -6.264985e+000, 2.037668e+000, 4.680308e-001, -7.345429e-002, 7.089261e+000, 4.719125e+000, -8.205204e-001, 1.017534e+001, -1.331602e+000, -3.491701e+000, 8.452734e+000, 3.543089e+000};

LDA basis matrix $\Psi_6^c$ [63][350]={
{-4.029048e+000, -4.462825e-001, -5.239335e+000, 1.165846e+000, 4.794160e+000, 1.450692e+000, 1.534510e-001, -1.272774e+000, 2.195707e-001, 3.905513e-001, -1.189780e+000, -3.497415e-001, -2.796471e+000, -3.662070e+000, -1.820318e+000, -1.568424e+000, 1.506639e+000, -3.016372e-001, -5.416993e-001, 5.054388e-001, -4.522941e+000, -1.508514e-001, -1.242227e+000, 3.567043e+000, 1.698223e+000, 2.549028e+000, 4.599970e-001, -8.883930e-001, -4.386756e+000, 3.739049e+000,


© ISO/IEC 2004 — All rights reserved

Copyright International Organization for Standardization
Provided by IHS under license with ISO
No reproduction or networking permitted without license from IHS
Not for Resale

6.634503e-001, 3.984669e+000, 1.808177e+000, -1.410234e+000, -4.205710e+000, -3.878288e+000, -1.204178e+000, 1.389033e+000, -2.709584e+000, -6.943249e-001, 1.874848e+000, 2.597699e-001, -2.784482e+000, -9.739092e-001, 1.770755e+000, 2.249645e+000, -5.702477e-001, 1.617474e+000, 1.505281e+000, -6.065000e-001, -2.904269e-001, -2.516824e+000, -8.452219e-001, 3.284117e+000, -7.958375e-002, 3.706661e+000, 2.158116e+000, 1.547503e+000, 2.048231e+000, -2.477180e+000, 3.229864e+000, 3.671081e+000, -1.651996e+000, -2.013848e+000, 2.767373e+000, 9.624996e-001, 4.407318e-001, -1.500177e+000, 7.689148e-001, 2.046551e+000, -2.264959e+001, -3.027953e+000, 2.604424e+000, -9.205974e-001, -6.333486e-001, -9.215395e-001, 4.855560e-002, -7.591756e-001, 4.713231e-001, 1.427746e+000, -2.160933e-001, -2.262047e+000, -2.746247e-001, -1.425054e+000, 7.709488e-001, -1.015310e+000, 1.914860e+000, 8.054263e-001, -9.504278e-001, -1.186054e+000, -4.651785e-002, 9.254108e-001, 7.588978e-001, -9.326586e-001, -9.155066e-002, -2.631689e-001, 3.220922e-001, -2.578369e+000, -2.727070e-002, 4.850841e-001, -7.584461e-001, -1.921996e-001, 2.503075e+000, 1.899381e+000, 2.377610e+000, 1.249587e+000, 1.093224e+000, 1.188545e+000, 2.223796e+000, -1.553084e+000, 1.157670e+000, -5.892058e-001, 1.246471e+000, -1.005686e+000, -6.546967e-001, -2.831969e-001, -1.005606e+000, -1.239034e+000, -2.236433e+000, 1.283873e+000, -1.373776e-001, 6.143333e-001, 3.422408e+000, 1.367529e+000, -2.048696e+000, -3.044678e-001, -4.625459e-001, 5.612278e-001, 3.694550e-001, -2.708040e-001, 2.151734e+000, -1.552626e+000, 7.871644e-001, 1.023891e+000, 3.069504e-002, -8.365999e-001, 4.791200e-001, 1.138409e+000, -9.848258e-001, -2.387990e-001, -5.296707e-001, -1.169702e+000, -6.266702e-002, 3.018823e-002, -6.036413e-001, 8.741928e-001, -6.708396e-001, -3.713648e-001, 3.606052e-001, 3.491544e-002, -1.197956e+000, -8.080093e-001, 1.849997e+000, 2.735758e+000, -4.699357e-001, 2.288886e+000, -2.096282e+000, -3.108730e-001, 5.653088e+000, 5.667675e-001, -1.480274e+000, 1.182536e+000, 1.166486e+000, -2.141430e+000, 4.804447e+000, -3.120356e-001, -2.212374e+000, 8.484810e-001, -2.660272e+000, 1.258365e+000, -4.033275e+000, 2.482552e+000, 5.334778e-001, -2.360497e+000, -2.388390e+000, 1.192269e+000, -4.315624e-002, -2.571174e+000, 4.003562e+000, 4.082626e-002, -3.943260e-001, -4.656933e-001, 1.598140e+000, -9.246046e-001, -1.761038e+000, 1.149470e+000, 5.484955e+000, 1.142068e+000, -3.112562e+000, -5.733520e-001, 1.432059e+000, -1.669700e+000, 1.379379e+000, -2.203805e+000, 1.216050e+000, 1.642248e+000, -2.781964e+000, -2.667744e+000, -3.698653e+000, 1.371589e+000, 8.311645e-001, -1.145721e+000, -1.887173e+000, -3.616850e+000, 4.690465e+000, -1.611475e+000, -6.911173e-001, -1.493744e-001, -2.779451e+000, 5.885096e-001, -1.821134e+000, 3.027149e-001, 1.086323e+000, 2.141240e+000, -1.630786e+000, -1.191385e+000, -2.338564e+000, 2.384326e+000, -4.383301e+000, -1.107445e+000, -1.760496e+000, -3.259817e+000, 3.675435e-001, -2.326522e+000, 2.843692e-001, 1.797847e+000, -2.796584e+000, -2.212151e+000, -1.685210e+000, 2.096894e-001, -3.910931e-001, 2.564409e+000, 2.561767e+000, 1.001385e+000, -1.353055e+000, -2.693434e-001, -5.304863e+000, 1.110776e-001, -9.394206e-001, -5.158697e-001, 1.664501e+000, -1.922744e+000, -5.024061e+000, 9.187316e-001, 1.295164e+000, -3.024673e+000, -1.050913e-001, 1.368898e+000, 4.053873e+000, -1.616709e+000, -2.525823e-002, 2.059349e+000, 2.430762e-001, -1.902713e+000, 3.489678e+000, 2.820232e-001, -2.702912e+000, 6.659337e-001, 2.324618e+000, -2.638520e+000, -4.010477e-002, -1.555591e+000, -1.912213e+000, 2.155487e-001, 1.167086e+000, 3.262484e+000, 1.942244e+000, 3.155126e-001, 1.584586e+000, 4.734537e+000, 5.331943e+000, -2.894125e-001, 1.188882e+000, 1.746221e+000, -2.740561e+000, -1.808265e+000, 1.742283e+000, -1.717877e+000, -5.205937e+000, 3.541926e+000, -1.152805e-001, 2.680413e-001, 1.422343e+000, 5.775622e+000, -2.197634e+000, 1.710963e+000, 1.761291e+000, 1.472269e-001, -6.213518e-001, 1.205314e+000, -1.122788e+000, 2.904399e+000, 8.165778e-001, -7.710465e-001, 1.813220e+000, -2.262639e+000, 1.138890e+000, -9.015651e-001, 1.650462e+000, -1.781694e+000, -1.606591e+000, -6.180589e-001, 8.634294e-001, 1.001028e+000, 1.162652e+000, 1.362657e+000, -7.838206e-001, 1.638276e+000, -7.575891e-001, 1.479038e+000, 5.280576e+000, 2.423136e+000, -2.147423e+000, -1.242610e+000, -4.175091e+000, -7.779600e-001, 7.244135e-001, -3.189085e+000, 9.922610e-001, -5.337296e-001, 3.918802e+000, -1.995159e+000, -9.607841e-001, -1.768379e+000, -1.626487e+000, -2.037750e+000, 4.012056e-001, -2.263650e+000, -3.567978e+000, -3.552881e-001, 2.545944e+000, -8.532640e-001, 2.971798e+000, 2.422748e+000, -1.779484e+000, 2.096203e-001, -2.249709e+000, 1.036004e+000, -4.095810e-001, 3.101095e-001, -2.001845e+000, -6.952637e-001, 1.002812e+000, 4.717186e-001, 1.351920e+000, 3.455231e+000, -2.083183e+000, 1.147601e+000, 4.525761e-001, -6.813412e-001},
{1.039465e+000, 1.623697e+000, -1.533970e+000, -3.652836e+000, -2.185577e+000, 2.548317e+000, 2.747712e+000, -4.028719e+000, 9.540479e-001, 1.528301e+000, 1.131687e+000, 2.143836e+000, -1.613676e+000, 2.760902e-001, -7.305326e+000, 1.839403e+000, -3.677079e+000, 7.554481e-001, -1.476428e+000, 3.937033e+000, 7.247067e+000, -2.520937e+000, 2.188750e+000, -4.089228e+000, -1.994394e+000, 9.140010e-001, -1.552678e+000, 2.481830e+000, -7.851178e-001, -1.541911e+000, 2.458367e-002, -2.439822e-001, -2.830466e-001, -1.272066e+000, -2.581062e-001, 2.895114e+000, -2.010646e+000, 3.325900e+000, -1.874604e-001, -3.232037e+000, -2.789205e+000, -1.136049e+000, 8.372583e+000, 1.178682e-001, 1.831388e+000, -2.188668e+000, -7.909653e-001, 5.096386e+000, -1.100724e+000, 6.249976e+000, 1.394743e+000, 2.929553e+000, -1.687452e+000, 7.138238e-002,

© ISO/IEC 2004 — All rights reserved


Copyright International Organization for Standardization
Provided by IHS under license with ISO
No reproduction or networking permitted without license from IHS
Not for Resale

1.588279e+000, 3.693979e+000, -1.887372e+000, -3.622010e-001, -3.292279e+000, 6.593845e+000, -1.583625e+000, -1.897664e+000, 2.478486e+000, 3.688807e+000, -8.166846e-001, 4.501785e+000, 3.466638e+000, -2.943787e+000, -1.719344e+000, 1.956520e+000, -5.906061e-001, 2.949578e+001, 9.951782e+000, 4.994415e-001, -3.238279e+000, -1.293081e-001, -5.507782e-001, 3.818509e+000, 4.403477e-001, 2.395367e+000, 1.718640e+000, -2.744273e+000, 1.650840e+000, -1.346795e+000, 3.940536e+000, 3.074378e+000, -2.022223e+000, -5.616985e-001, -7.995307e-001, -2.055098e+000, 3.380427e-001, -1.007159e+000, -3.320897e+000, -1.067852e+000, 4.639244e-002, -8.657033e-001, 6.171030e-001, -2.162701e+000, -9.588470e-001, -4.927796e-001, 2.141616e+000, 1.477772e+000, -1.350122e+000, -7.530768e-001, 1.935276e+000, 2.476592e+000, -1.469717e+000, 2.518685e+000, -1.467197e+000, 2.018672e+000, 1.443537e+000, -1.609927e+000, -6.231076e-002, 1.673560e-001, 4.566717e-001, 3.574052e+000, 5.545438e-001, 2.273754e-001, -3.222331e+000, 6.010652e-001, 1.835250e+000, 2.058252e+000, 1.044472e+000, -3.511839e+000, -1.063515e+000, -3.958385e-001, 1.321770e+000, 1.283565e+000, -1.604712e-001, -8.108367e-002, -2.070886e+000, -1.117691e+000, -3.336133e-001, 1.187505e+000, -1.928286e+000, 1.244919e+000, -2.543070e+000, 3.432863e-002, 1.026545e-002, -1.614516e+000, 1.204376e+000, -1.403162e+000, 1.224276e+000, 1.665959e+000, 3.967955e-001, -1.183027e+000, -2.285282e+000, 3.209032e+000, 1.192447e+000, 9.818419e-001, -1.157240e+001, -1.166630e+000, -3.682525e+000, -1.154189e+000, -1.489235e+000, 1.175168e+000, -1.300916e+000, 1.211871e+000, 5.367900e-001, 4.165346e-002, -3.623677e-001, -1.342661e+000, -1.179968e+000, 1.959193e+000, -3.003760e+000, 8.094649e-001, 1.595976e+000, 1.207850e+000, -1.671567e+000, -4.770082e+000, -1.714154e+000, 1.255361e+000, 2.650760e+000, -1.152302e+000, 1.457499e+000, -7.748837e-002, -4.424556e-001, 5.708247e-001, 2.793025e-002, -2.323952e+000, -1.327469e+000, 7.262491e-001, -1.848950e+000, -3.509039e-001, 1.577566e+000, 5.717658e-001, -4.114309e+000, 1.866528e-001, 3.389507e+000, -3.837237e+000, 7.994203e-001, -8.616741e-001, -1.487321e+000, -3.066358e+000, 4.612533e+000, 2.876557e+000, 2.825636e+000, 5.499859e-001, -1.338084e+000, -1.005485e+000, -2.256689e+000, 1.468062e+000, -2.357302e+000, -9.420857e-001, 1.108231e+000, -2.309496e+000, 8.355896e-002, 9.878846e-001, 4.140745e+000, 2.324286e+000, -1.944539e+000, -1.912298e+000, 4.010275e+000, 4.338404e+000, 1.258842e+000, -3.237845e+000, 2.470213e+000, -2.326216e+000, -3.430347e+000, -7.526524e-001, -1.534304e+000, 2.342159e+000, -1.942340e-001, -2.609787e+000, -1.592833e+000, -6.730491e-001, 9.839305e-001, 4.160875e-001, 2.977611e+000, 3.013806e+000, -3.284614e+000, 1.619519e+000, -6.717067e-001, -3.220623e+000, 5.685020e+000, 2.774084e+000, 4.913904e-001, -7.220051e-002, 1.263858e+000, -1.327376e+000, 7.312024e-001, -1.123525e+000, 2.029417e+000, -2.388238e+000, -1.495434e+000, -9.662654e-001, -1.262575e+000, -3.614410e+000, -3.945086e+000, -3.663444e+000, -1.455879e-001, -9.710335e-001, 1.485407e+000, 2.594009e-001, 4.079979e+000, -6.337470e-001, 1.210442e+000, 1.791588e+000, 1.762341e-001, -1.210657e+000, -2.914158e+000, -2.293473e+000, 4.341175e+000, 7.850625e-001, -2.742420e+000, -2.718438e+000, 1.761209e+000, 6.292720e-001, -1.081428e+000, -3.867164e+000, -2.560206e+000, -3.980942e+000, 1.927897e+000, -3.382328e+000, 2.046642e-001, 2.030805e+000, 1.180211e+000, -3.567419e+000, 1.916283e+000, 5.821934e-001, -1.180027e+000, -2.792238e+000, 3.782838e+000, 3.425479e+000, -1.023888e+000, -1.096221e+000, -3.856874e-001, -1.586972e+000, -4.100149e+000, 6.659819e-001, 7.073436e-001, 9.888807e-001, -1.476955e+000, 1.407820e+000, -4.402350e+000, 2.644013e+000, 3.910120e-001, -1.930126e+000, 1.068703e+000, 2.911642e+000, -1.151639e+000, -4.422616e-001, -1.646358e+000, -8.990628e-001, -2.396594e+000, 2.515120e+000, -3.094473e-001, -1.730177e+000, 1.152417e+000, 7.051271e-001, -4.963035e+000, 1.051920e+000, 1.398109e+000, -2.780587e+000, 2.134839e+000, 4.772715e-001, -1.264696e-001, 2.971215e+000, 9.623829e-001, 1.664682e-001, -5.732462e-001, 1.440010e+000, 2.315940e+000, 2.505103e+000, -2.764021e+000, -6.857559e-002, -1.882866e+000, -4.318945e-001, -1.056353e+000, -9.638586e-001, 2.645262e+000, 2.846889e+000, -2.687562e+000, 8.461834e-002, 2.148035e+000, -6.447834e-001, 1.731238e+000, -9.236258e-001, 1.106464e+000, -2.821247e+000, 1.515260e+000, 1.699648e+000, 3.066596e-001, 3.959664e-001, -4.698365e+000, -1.710121e+000, 1.329399e+000, -9.978610e-001, 2.259018e+000, -1.013546e-002},

{9.350450e-002, 8.005976e+000, -5.126585e+000, 6.079672e-001, -1.870031e-001, 3.932982e+000, 1.522904e+000, 3.478710e+000, -3.457124e+000, -5.606394e+000, -3.013171e+000, -4.743087e+000, 1.272606e+000, -1.693923e+000, -7.503338e+000, 3.426413e+000, 3.736429e+000, 8.778904e-001, -5.526033e-001, 1.731751e+000, -1.362919e+000, -1.298992e-001, 4.390277e+000, 9.008287e-001, 3.563618e-002, -1.368339e+000, -2.935439e+000, 2.577718e-003, 2.729217e+000, -4.756447e+000, 6.178185e+000, 3.985995e+000, -1.109469e+000, 1.457279e+000, -1.228480e+000, -7.554985e-001, -2.356158e-001, -1.215937e-001, -1.505224e+000, -1.042187e-001, 9.457370e-001, 4.629703e-001, -1.747203e+000, 2.980676e+000, -6.054719e-001, -7.429431e-001, -3.083913e+000, 2.165399e+000, 1.403057e+000, 1.011790e-001, 8.909335e-001, -4.256095e+000, -3.394810e+000, 3.003708e+000, -8.732000e-001, 1.270814e+000, -1.867769e+000, -5.241736e+000, -1.027448e+000, 2.432462e+000, -1.381820e+000, -5.312340e+000, 4.063943e+000, 2.236193e+000, 7.955595e-001, 2.410291e+000, -4.449007e+000, -1.294911e+000, 1.138617e+000,


© ISO/IEC 2004 — All rights reserved

Copyright International Organization for Standardization
Provided by IHS under license with ISO
No reproduction or networking permitted without license from IHS
Not for Resale

1.846452e+000, 3.869615e-001, 3.354091e+000, -3.181014e+001, 3.774884e-001, 6.580229e-001, -6.142827e+000, -3.675919e+000, -6.537757e-001, -1.197219e+000, -2.637399e+000, 2.204706e+000, 1.125115e+000, -1.551127e+000, 1.308538e-001, -7.854773e-001, 4.069195e+000, -3.394191e+000, 4.001661e+000, -8.504896e-001, -1.291508e+000, -4.187977e+000, -2.612882e+000, -9.952797e-001, -4.802508e-001, -2.601901e+000, 1.453563e+000, 6.091560e-001, -1.772169e+000, -1.864218e+000, -6.367669e-001, -2.558310e+000, -1.878963e+000, -1.483238e+000, -3.722335e-001, -5.128566e-001, -1.139147e+000, 3.763717e+000, 1.957340e+000, -3.021487e+000, 2.461309e+000, 9.506003e-001, 4.794241e-002, 9.940088e-001, -1.813641e+000, 2.637063e-001, -7.771252e-001, 1.116742e+000, 7.203759e-001, -9.181787e-002, 9.979851e-002, 1.301440e+000, -2.915863e+000, 1.188213e+000, 9.969401e-001, 6.615832e-001, 5.372616e-001, 1.935645e+000, 3.096046e-001, 2.668801e-001, 3.121302e+000, -1.683896e+000, -2.822591e-001, -8.280957e-002, 1.205595e+000, 1.031537e+000, -2.823951e-001, 3.875575e-001, -6.033067e-001, -3.317094e-002, 4.417148e-001, 2.820772e-001, 1.526458e+000, -2.762805e+000, 1.164080e+000, 6.707275e-001, 5.621161e-001, 1.543020e+000, -4.336429e-001, 1.707615e+000, 4.793723e-001, -1.139761e+001, -6.339469e+000, -4.564097e+000, -2.167348e+000, -1.249912e+000, 1.030334e+000, 2.077261e+000, 2.086209e+000, -3.387173e+000, 1.814633e+000, -1.020352e+000, -2.095706e-001, -4.398326e+000, 7.381754e-001, -2.120047e+000, 9.552846e-001, 1.689758e+000, -5.369111e-001, 1.153159e+000, -2.810341e+000, -2.831961e+000, 1.014757e+000, 3.384918e-001, 1.817840e+000, -1.916603e+000, 3.493485e-001, -3.379433e-001, -3.261271e+000, -2.700218e+000, 3.352982e+000, -1.303099e+000, -1.269497e+000, 6.523744e-002, 3.268800e+000, 2.107167e+000, 3.920550e-001, 2.389232e+000, -2.894766e-001, -3.208050e+000, 3.780835e+000, 1.627273e+000, 4.453165e+000, -8.280774e-001, -2.971559e+000, 3.004906e-001, -5.277930e+000, 3.067890e+000, -3.015004e+000, -4.149791e+000, -1.938640e+000, -7.494259e-001, -2.500163e+000, -2.134599e+000, -2.077220e+000, -2.357618e+000, 9.995567e-001, -6.612550e-001, 2.736873e+000, 8.618352e-001, 1.645253e-001, 2.045658e-001, 1.033408e+000, -1.317501e+000, 2.877040e-001, 1.815098e+000, -1.910425e+000, 4.352365e-001, 8.521725e-001, -5.477376e-001, -7.673613e-001, 4.141311e+000, -2.889756e+000, 1.821156e+000, 2.328686e+000, -1.267470e+000, 2.364760e-001, -3.694719e-001, 4.978670e-002, -3.522539e-002, -3.516865e+000, 2.755484e+000, 1.738584e+000, 2.875884e-001, 2.138567e+000, -1.635021e+000, -8.582699e-002, -8.981752e-001, -1.291328e+000, 3.559705e+000, 2.188720e+000, 9.416224e-001, 1.651714e+000, -5.046882e+000, 3.876307e+000, -5.440930e+000, -1.231553e+000, -1.726939e+000, -1.609569e+000, -5.263725e-001, -8.567021e-001, -5.956615e-001, 6.023403e-001, 1.536682e+000, -6.417422e-001, -2.281691e+000, -1.468226e+000, -5.114044e-001, -8.810196e-001, -1.931668e+000, 2.359468e+000, 2.289834e+000, 4.763905e-001, 7.738173e-001, 6.222124e-001, 1.684850e+000, 2.013982e+000, 8.531661e-001, -2.852072e+000, 1.456802e-001, 1.728326e+000, 1.544966e+000, 4.577438e+000, -2.630507e+000, -3.753987e-001, 1.017765e+000, -2.602606e+000, 2.969861e+000, -1.692522e+000, 6.482153e+000, 1.813872e+000, 1.915714e+000, -3.369141e+000, 1.083986e+000, -9.721097e-001, 9.060510e-001, -1.231928e+000, -1.455108e+000, 1.025157e+000, 9.060726e-001, -7.539582e-001, 1.475043e+000, -1.768083e+000, -1.978676e+000, -5.719304e-001, 2.166792e+000, -1.200448e+000, -1.916698e-001, 2.786987e+000, 2.633180e-001, 1.174359e-001, -3.746428e+000, -2.095370e+000, 9.330942e-001, -3.303756e+000, -3.743193e-001, -3.174063e-001, 4.426412e-001, -5.161695e-001, 1.425850e+000, -2.160908e+000, 1.491148e+000, -3.737183e+000, 1.590333e+000, -6.731528e-001, 3.761669e+000, 3.018934e+000, -2.331304e+000, 6.497816e-001, -3.984982e+000, -1.587660e+000, -7.538976e-002, -4.046446e+000, 4.023665e+000, -1.760453e+000, 4.803176e+000, 3.363072e-001, 1.075353e+000, -1.865443e+000, -7.933205e-001, -5.494945e-001, -4.671063e-001, -3.924554e-001, 1.232475e+000, -3.331583e+000, 6.733002e-002, 1.439934e+000, 1.266130e+000, -1.836124e+000, -2.913353e+000, 1.303555e+000, 1.390562e+000, -1.442952e-001, -1.573507e+000, 2.788888e+000, 7.912222e-001, -4.902042e-001, 1.906791e+000, 1.369639e+000, -1.541454e-001, 6.431029e-001},
{6.666409e+000, 5.058108e-001, 4.247193e+000, -3.067505e+000, -5.076146e+000, 4.808355e+000, 2.624284e+000, 2.188379e+000, -4.779181e+000, -4.276511e+000, -5.264679e+000, -7.276803e-001, -1.861850e+000, -4.145315e+000, 7.472887e+000, 3.887237e+000, -2.090145e+000, -8.474621e+000, 2.812360e+000, -3.325320e+000, -6.282348e+000, 2.804298e+000, -3.544289e+000, -5.540730e+000, -5.092671e+000, -8.806636e-001, -1.604746e+000, 4.660686e+000, -4.853752e-002, -1.262858e+000, -2.836840e+000, 1.850471e+000, 3.739064e+000, -6.345467e+000, 3.762561e+000, -3.083752e+000, 1.681031e+000, -4.471478e+000, -1.313360e+000, -1.142230e+000, 7.592562e+000, 9.658427e-001, 9.684077e-001, 9.440847e-001, 5.799876e+000, 2.391135e+000, -2.652388e-001, -4.108249e+000, 1.052907e+000, -4.421276e-001, -2.881744e+000, -1.138171e-001, 1.278486e+000, 5.480243e-001, 2.984801e+000, 4.024015e-002, -6.650092e+000, -1.152476e+000, -9.380521e-002, -6.796402e+000, -6.364659e+000, -3.253420e+000, -5.781249e+000, -5.979977e+000, -4.455429e+000, 5.502156e-002, -2.273462e+000, 8.209666e-001, -5.329795e+000, -8.066940e+000, -6.078264e+000, 4.602621e+000, -1.110872e+001, -4.322373e+001, -2.208133e+000, 7.261967e+000, -3.916330e+000, 2.957241e+000, -1.657827e-001, -3.266139e+000, 9.602181e+000, -1.696616e+000, 2.090028e+000, -7.471605e+000, -2.296225e+000, -2.164112e+000, -5.145536e-001, -3.209256e+000, 4.400011e+000, -

© ISO/IEC 2004 — All rights reserved


Copyright International Organization for Standardization
Provided by IHS under license with ISO
No reproduction or networking permitted without license from IHS
Not for Resale

3.549308e+000, -2.572646e+000, 3.173337e+000, -6.798954e-001, 3.142503e-001, -4.143732e+000, 3.130146e-001, -3.782427e+000, 2.682075e+000, 1.577862e+000, 1.753998e+000, -1.756186e+000, -2.405086e+000, -3.061315e-001, -2.380615e+000, -4.072801e+000, -1.172051e+000, -3.197806e+000, -2.895108e+000, -5.935867e+000, -1.441241e+000, -9.127387e-002, 1.723159e+000, 4.015054e+000, 5.343485e-002, 1.777690e-001, -3.529302e+000, -7.976540e-001, 3.351181e+000, 3.367014e+000, -7.069033e-001, -2.165137e-001, -4.157695e+000, -5.299867e+000, 3.255585e-001, 2.373339e+000, -2.805056e+000, 3.480576e+000, 3.682567e-001, -2.503166e+000, -1.052158e+000, -3.314897e+000, 2.557586e+000, -1.752636e+000, -3.806615e+000, 1.660231e+000, 1.704106e+000, -1.546498e+000, -3.637959e-001, 3.322915e-002, -7.261099e-001, 3.569979e-001, -2.220448e-001, 2.492937e+000, 7.734602e-001, 1.369287e+000, 2.845941e-001, 1.313456e+000, 3.527384e+000, -9.436189e-001, 1.571689e+000, -1.101088e+001, 1.253541e+000, 3.879576e+000, 2.207989e+001, 2.689840e+000, 2.175004e+000, 2.952526e+000, 2.148500e-002, 3.848629e-001, -1.958104e+000, 6.893133e+000, 1.079353e+001, -3.851055e+000, 1.146164e+000, -2.910677e+000, 3.745409e+000, 1.409310e+000, -3.030286e+000, 3.924984e+000, -7.157972e+000, -3.050004e-001, 5.371862e+000, -7.108927e-001, -8.577894e-001, 3.590062e+000, 3.342184e+000, -5.074924e+000, 2.024853e+000, 1.786030e+000, 6.535297e-001, 6.983742e+000, 1.056153e+000, 5.510149e+000, 3.897093e+000, 4.618095e+000, -5.730401e-001, -2.014150e-002, -1.978823e-001, -3.044090e+000, -4.903141e-001, 1.349814e-001, 3.628580e+000, 1.870074e-001, -3.095851e+000, -2.050220e+000, -7.422016e+000, -2.505415e+000, 1.684201e+000, -1.632644e+000, 6.657402e-003, -6.066947e+000, 5.965462e-001, 3.070313e+000, -1.770844e+000, 3.660037e+000, 1.814986e+000, -3.313593e+000, -9.557623e-001, 9.313354e-002, 5.884514e+000, 7.115665e+000, 1.564836e+000, 7.187115e-001, -1.291510e+000, -1.601124e+000, -1.119206e-001, -2.390507e+000, -6.893774e+000, -1.816432e+000, 8.435028e-001, 7.581833e+000, 3.742574e+000, 2.442186e+000, -5.515358e+000, 5.650694e-001, 3.089443e-001, -9.451724e-001, -8.631673e-001, 2.233917e+000, -1.815784e+000, 2.140253e+000, -3.532250e+000, 2.481954e+000, -4.315170e+000, 2.359690e+000, 6.807866e-001, -4.761163e+000, -5.253773e+000, 3.500663e+000, 5.689894e-001, -5.189455e-001, -3.996568e+000, -4.459383e+000, -4.713561e+000, -4.862774e+000, 3.026561e+000, 5.122998e+000, 2.328976e+000, 2.852562e+000, -1.719772e-001, 3.883546e+000, -1.937192e+000, 2.745410e+000, -2.323024e+000, -3.446784e-001, -4.859992e+000, -6.097371e-001, -2.276893e+000, -1.567820e+000, -6.491063e+000, 9.874988e-001, -4.960666e-001, 4.802673e+000, 2.177863e+000, 2.329479e-001, -4.052973e+000, 1.034464e+000, -4.988689e-001, 2.880919e+000, -1.797156e+000, 3.165273e+000, 4.706095e-001, -2.957983e+000, 5.895124e+000, -3.666924e+000, 4.967551e+000, 2.465052e+000, -3.287325e+000, -2.557539e-001, 5.816071e-001, -5.463645e+000, -5.739395e+000, 6.086320e+000, -2.452436e+000, 2.722344e-001, 1.002776e+000, -2.674475e-001, 4.482216e+000, 1.365639e+000, 2.291764e+000, -2.304893e+000, -8.872500e-001, 1.377664e+000, 2.230702e+000, 3.988370e+000, 2.599327e+000, -2.029297e+000, 3.309258e+000, -2.052251e+000, 1.079515e+000, 3.239975e+000, -4.666779e-001, 3.187067e+000, 7.110222e+000, 2.972774e+000, 1.095903e+000, -1.584185e+000, -5.232280e+000, 3.590969e-001, -2.533161e+000, 1.255531e+000, 5.831154e+000, 8.835873e-002, 1.664816e+000, 1.172390e+000, -4.320282e+000, 3.394262e-002, -4.710635e-001, -3.123043e+000, 1.106421e+000, 2.193731e+000, 7.930242e+000, -4.533316e-001, -1.470443e+000, 2.227061e+000, -5.433348e+000, -2.366225e+000, -5.434409e+000, -2.146235e+000, -2.573216e+000, 3.112386e+000, 1.824067e+000, 8.692409e-001, 3.194658e+000, 1.015362e+000, 3.848903e-001, 4.134254e+000, 2.262958e+000, 2.276663e-001, 1.492282e+000, 2.370459e+000, -6.972295e-001, -3.228361e+000, -2.904052e+000, 1.910346e+000, 1.403532e+000, 4.903602e+000, -2.509978e+000, 4.059054e-001, 1.718419e+000},
{1.253788e+001, 8.270709e-001, -8.094055e+000, 1.979125e+001, -6.332924e+000, -1.746620e+000, -1.036188e+000, -3.691090e+000, 1.119782e+000, 6.387685e+000, -2.697965e+000, 6.281963e+000, -9.820529e-001, 2.597979e+000, -7.457346e+000, -8.726693e-001, 1.117237e+000, -1.195791e+000, -1.125126e+000, 4.201586e-001, 3.189520e+000, -3.453189e+000, -8.021382e+000, 2.191603e+000, 6.664246e+000, -3.163307e-001, -5.429552e+000, -1.065870e+000, 1.210979e-001, -3.643930e+000, 8.534155e-001, 3.321118e+000, -4.110450e+000, -1.204760e+000, -1.277076e+000, -5.737524e-001, 5.164276e+000, -2.727757e+000, 1.914112e+000, 9.958173e-001, -3.390180e+000, 2.547053e+000, 2.555053e-001, -4.754947e+000, 7.427714e-001, -4.354170e-001, 1.648044e+000, 4.797970e+000, 4.164374e+000, -4.240115e+000, 7.290520e+000, 1.593896e+000, 4.165383e+000, 1.162385e+000, 8.605394e-001, 1.831475e+000, -4.506083e+000, 1.595859e+000, -4.288747e+000, -5.672915e+000, 3.871583e+000, 1.027866e+000, 2.233466e+000, 4.889193e+000, 2.608707e+000, 1.870355e+000, -3.245126e+000, -2.756895e-001, -1.049502e+000, -2.142199e+000, -4.128297e-001, -4.615744e-002, -5.232376e+000, -7.380649e+000, -3.387033e+001, -1.865422e+001, 1.560733e+000, -2.037163e+000, -5.062573e+000, 4.978098e+000, -1.656835e+000, 7.128353e+000, 5.357298e+000, 2.124146e+000, -4.006710e+000, 4.145194e+000, -1.138470e+000, -6.570770e-001, -1.242077e-001, 4.491675e+000, -5.329990e-001, -6.880773e-001, 3.602354e+000, -1.026680e+000, -1.313975e+000, -1.263925e+000, 9.379261e-001, -3.845871e+000, -3.163067e-002, 3.455272e+000, -1.993808e+000, 2.115398e+000, -1.703016e+000, 5.048916e+000, -3.116691e+000, 2.226834e-001, -


© ISO/IEC 2004 — All rights reserved

Copyright International Organization for Standardization
Provided by IHS under license with ISO
No reproduction or networking permitted without license from IHS
Not for Resale

1.542362e+000, 1.751402e+000, -9.677265e-002, 9.825739e-001, -1.767944e+000, 3.890221e+000, 4.901166e+000, -3.531600e+000, -7.389324e+000, 1.459748e+000, 4.559456e-001, 2.020610e+000, -7.727590e-002, -7.966807e-001, -9.260574e-001, 8.029390e-001, 9.177145e-001, -4.186302e+000, -1.973729e+000, 1.976577e+000, -2.779666e-001, 1.348940e+000, 9.838056e-001, -4.389973e+000, 3.831373e+000, -5.971222e+000, -2.686183e+000, 1.100710e+000, 5.163090e-001, -1.865865e+000, -1.861903e+000, -1.674238e+000, -4.273272e+000, 1.152204e-001, 5.830819e-001, 1.038449e+000, -3.796472e-001, 4.427291e+000, 1.548793e+000, 1.712948e+000, 1.368996e-001, -1.742803e+000, -2.867067e+000, -2.286486e+000, -5.016602e+000, 5.010578e+000, 9.539059e+000, -8.685892e+000, 1.499901e+000, 2.347100e-001, 1.010032e+001, -2.977094e-001, -8.240517e+000, -6.637242e+000, -8.327796e-001, 1.972950e+000, -2.282633e+000, 3.971657e+000, -3.300119e+000, -1.416183e+000, 2.644157e+000, -6.004480e+000, -1.525957e+000, -1.620453e+000, -2.176169e+000, -4.755066e+000, -5.857214e-001, 5.369540e+000, 3.537007e-002, -6.033083e+000, -1.181335e+000, -1.572196e+000, -3.199971e+000, -3.266734e+000, 1.299984e+000, 1.735249e+000, 3.743599e+000, 4.484706e+000, 4.238749e+000, -2.091582e+000, -3.634435e+000, -3.314412e-001, -4.185145e+000, -4.612731e+000, 3.239777e+000, -3.775921e+000, 9.910333e-001, -5.570545e-001, 1.595960e+000, -6.563840e+000, -2.461777e-001, -2.700564e+000, 6.678363e-001, 3.687522e-001, 7.149201e-001, 3.012536e+000, -3.206005e+000, 2.202177e+000, -2.513966e+000, 3.572195e-001, 1.456248e+000, 1.678446e+000, 7.651880e-001, 8.182247e+000, -2.337027e-001, -6.591320e+000, 1.870086e+000, 1.206537e+001, 4.601505e+000, -7.264601e+000, -2.676678e-001, 6.343441e+000, 3.535814e+000, -5.760982e-001, -3.013973e+000, -1.355447e+000, -1.942654e+000, 2.032007e+000, -1.118539e-002, -1.896421e+000, 1.972715e+000, -1.154716e+000, -5.420333e+000, -3.564888e+000, -2.883005e+000, -1.986082e+000, -1.746583e+000, -2.209708e+000, 8.562863e+000, -1.193074e+000, 8.760413e-001, 7.173467e-001, -3.506846e-001, -1.864417e-001, -3.263869e+000, -3.982997e+000, 1.151046e-001, 2.870927e+000, -2.672000e+000, 1.494377e-001, -6.131819e+000, -2.166286e+000, -4.988321e+000, -7.860596e-001, 4.801527e+000, 2.139348e+000, 1.554370e+000, 4.391753e+000, -4.137635e-001, 2.625034e+000, -2.548632e+000, 1.827685e+000, -1.849564e-001, -1.894736e+000, 2.822096e+000, -8.612768e+000, 5.684624e+000, -1.210319e-001, 4.301344e-001, 1.440533e+000, 6.273891e+000, 1.805600e+000, -2.740404e-001, 1.859701e+000, -2.929369e+000, -2.706798e+000, 2.707752e+000, 1.651892e+000, -4.243342e+000, 8.319823e-001, 1.490987e+000, 1.010290e+000, 2.696048e+000, -4.473119e+000, 2.503839e+000, -3.105228e+000, -1.733589e+000, -5.808708e+000, 4.461618e+000, -2.906074e+000, -2.121036e+000, 1.536224e+000, -6.104464e+000, -8.869480e-001, -3.628970e-001, 3.390821e+000, -5.001314e+000, -2.854239e+000, -1.602227e+000, 3.248692e-001, -6.142662e-002, 2.286768e-001, 4.924792e-001, -4.377353e+000, -3.995688e+000, 3.060511e+000, -2.913258e+000, -2.273460e+000, 4.210372e+000, 1.555211e+000, -2.124131e+000, 3.481281e-001, 1.783372e+000, 1.249124e+000, -8.573386e-001, 2.159508e+000, -1.008690e+000, 2.653884e+000, 1.313481e+000, 3.797055e+000, 1.125379e+000, 2.951126e+000, -1.161750e+000, -8.450026e-001, -7.057330e-001, 3.828129e+000, -1.635866e-001, 3.816984e-001, 2.565380e+000, 1.610900e+000, 9.076443e-001, -3.618172e+000, 1.939917e+000, -2.254651e-001, 3.415939e+000, -3.069351e+000, -3.088664e+000, 6.491058e-001, -3.332639e+000, 2.827227e-001, 7.199513e-001, 1.044063e+000, -4.762027e-001, 5.503020e-001, 3.031736e+000, -2.239141e-001, 6.489358e-001, 8.454383e-001, 2.150551e-001, 5.604432e-001, 2.178814e+000, 1.747445e-001, 1.526583e-001, -4.270864e+000},

{6.965621e+000, 2.456738e-001, 5.070768e+000, -1.154666e+001, 4.336705e+000, 5.545663e+000, 6.414864e+000, -5.990727e+000, -6.271829e+000, 1.533505e-001, -6.856560e+000, 4.673307e+000, -4.478615e+000, -7.539916e-001, -3.254374e+000, 9.892242e+000, -5.680578e+000, -1.254785e+000, 2.213031e+000, -3.401576e+000, -1.993417e+000, 5.779965e-001, 3.622681e+000, -3.068615e+000, -1.395272e-001, -1.997786e+000, 2.285512e+000, -1.047942e+001, -8.473760e+000, -1.112944e+000, 4.327931e+000, -3.213239e+000, -4.668207e+000, 1.992706e+000, -5.492026e+000, 5.209722e+000, 6.835514e-001, -1.323349e+000, 3.561958e+000, -9.634886e-001, 7.010354e-001, -2.677482e+000, -4.182693e-001, -7.052609e+000, -2.408862e+000, -1.603771e-001, -3.184111e+000, 2.972937e+000, -1.855931e+000, 9.385894e-001, -1.349660e-001, -9.291608e+000, -5.726588e+000, 5.881039e+000, -3.920769e+000, 2.540052e+000, 1.639206e+000, -1.273711e-001, -4.029562e+000, -4.010984e+000, 3.346540e+000, 4.436441e+000, -1.239682e+000, -4.391364e-001, -6.004195e-001, 3.155187e+000, -2.738647e+000, -2.610230e+000, -1.624044e+000, -3.695686e+000, -3.532025e+000, 3.169083e+000, 1.243318e+001, -1.377482e+001, 8.337481e+000, -4.241132e+001, -1.285569e+001, -6.357988e+000, -1.967713e+000, 4.408334e+000, 6.274327e+000, 1.619083e+000, 5.342931e+000, 2.944519e+000, 4.808694e-001, 2.248506e+000, -9.890923e+000, -4.006877e+000, -3.468267e+000, 5.354900e+000, -1.420169e+000, -5.108776e+000, 2.404130e+000, 6.005097e-001, 3.641669e-001, -5.861056e-001, 1.175687e+000, 2.891061e+000, 4.246300e-001, -3.957041e+000, 2.902839e+000, 2.640410e-001, -3.689342e+000, 2.149612e+000, -3.224837e+000, 2.102063e+000, 2.936675e+000, -2.937908e+000, -1.959828e+000, 1.969094e+000, -3.787374e+000, 1.067335e+000, -5.093402e+000, -8.413260e-001, 3.033526e+000, -5.961261e-001, -1.182195e+000, -3.421131e+000, 3.013756e+000, 3.834119e+000,

© ISO/IEC 2004 — All rights reserved


Copyright International Organization for Standardization
Provided by IHS under license with ISO
No reproduction or networking permitted without license from IHS
Not for Resale

-1.279839e+000, -3.526593e+000, -6.203059e-001, 1.130292e+000, 2.798858e-001, -1.352867e+000, -2.388051e+000, -4.617618e+000, -3.815399e-001, -8.377602e-001, -2.697298e-001, -1.845414e-001, -6.802799e-001, -3.021542e+000, 2.698537e+000, -9.136652e-001, 1.815340e+000, -7.911458e-001, 1.274021e+000, -3.316526e+000, 8.811382e-001, -6.523963e-001, -2.750455e+000, -1.683514e+000, 1.252468e-001, -1.431518e-001, -1.065841e+000, 1.103837e+000, -1.700776e-001, 3.140679e-001, -3.147965e-001, -2.320948e+001, -2.988198e+000, -1.696439e+000, -1.681735e+001, -2.592876e+000, 6.639285e+000, -4.079306e+000, -5.727518e-001, -4.973644e+000, -1.510282e+001, 2.633092e+000, -1.098431e+001, 1.298066e+000, 4.168075e+000, 3.990956e+000, 7.684439e+000, 9.618464e-001, 8.406475e+000, -9.077798e+000, 6.965500e-002, -7.952178e+000, 7.520873e+000, 2.702281e+000, -2.277819e+000, -8.661978e-001, 2.730100e+000, 7.553955e+000, 2.061022e-001, 2.209887e+000, 3.828470e+000, 9.175151e-002, 8.482958e-001, 1.992280e+000, 1.831512e+000, 7.990839e-001, 9.186495e+000, 2.266393e+000, -1.592425e-001, 2.746640e+000, 6.616052e+000, -7.430074e-001, -1.168533e+000, 7.410313e+000, 1.274901e+001, -3.589384e+000, 2.872275e+000, 6.353325e-001, -2.129653e+000, -7.964882e-001, 2.943875e+000, 4.469453e+000, -5.179416e-001, 5.273206e+000, -2.098675e+000, -7.223558e+000, 3.047129e-001, 1.143405e+001, -1.070335e+000, 8.651445e+000, 5.061503e+000, -1.608512e+000, 1.732347e+000, 4.188753e+000, 1.696734e+000, 4.109714e+000, 8.883533e+000, -2.154278e+000, -6.846160e+000, 5.540469e+000, -3.582589e+000, 4.712382e+000, 1.116755e+000, -3.785841e-001, 1.527612e+000, -1.073602e+000, 2.107103e+000, 2.303201e+000, 6.943029e+000, 1.557760e+000, -1.671101e+000, -6.420126e+000, 3.828963e+000, -1.552815e-001, -1.465222e+000, -8.562829e+000, -6.812489e-001, -6.636165e+000, 2.989484e+000, -3.722033e+000, 6.535760e+000, -2.106453e+000, -6.415611e+000, -8.749652e-001, -5.668311e+000, 2.268373e+000, -1.106194e+000, -1.925898e+000, -6.279344e-001, 6.914405e+000, -6.366936e+000, -8.046010e-002, -3.828055e+000, 1.721995e+000, -2.320818e+000, -4.047923e+000, -5.067378e+000, -2.970807e-001, -2.929387e+000, 2.380900e+000, 3.676164e+000, -1.181953e-001, 7.055284e-001, 3.956743e+000, -1.601935e+000, -8.970109e-001, 5.261004e+000, -2.678415e+000, 2.440793e+000, -3.888743e+000, 4.240492e+000, 7.808006e+000, 2.766395e+000, -3.673067e+000, -5.850282e+000, 8.931403e-001, -3.641422e+000, -2.004110e+000, 5.730175e-001, -1.077345e+001, -2.281825e+000, 2.871699e+000, -3.988929e-001, 8.844965e-001, 3.329695e-002, -3.482831e+000, -1.951186e-001, 1.503680e+000, 3.377050e+000, -8.055384e-002, -4.056550e+000, 3.772628e+000, -1.491041e+000, -3.527038e+000, -3.436950e+000, -8.073285e+000, -1.359471e+000, 7.291468e-001, -3.974835e+000, 3.215331e+000, -3.529930e+000, 1.411525e+000, -3.090667e+000, 3.352984e+000, -5.026734e+000, 2.756968e-001, -7.347072e-001, 1.514898e+000, 1.622389e+000, 4.951427e-002, 5.925691e+000, -4.727002e-001, -3.762313e+000, 9.545454e-001, 4.162465e+000, 1.076316e+000, 2.407531e+000, 9.217116e-002, 2.692121e-001, 1.928338e+000, -1.536649e+000, -1.371334e+000, -3.070010e+000, -3.576146e+000, -1.742190e+000, -3.290243e+000, 5.568860e+000, -1.209802e-001, -5.029165e-002, -1.789178e+000, -3.880446e-001, 2.177906e+000, 3.583176e+000, 7.210614e+000, -1.714599e+000, 2.081235e+000, -1.690232e+000, -3.105905e+000, -4.206931e+000, -8.476440e-002, 3.046307e+000, 4.558176e+000, -3.028404e+000, -1.356530e+000, -1.400146e+000, -1.752812e+000, -2.464780e+000, 2.581652e-001, -4.840449e+000, 5.193103e-001},
{-2.143786e+000, 2.386274e+000, 8.153558e+000, 5.602708e+000, 4.770344e+000, -3.039917e+000, 4.518787e+000, 1.883634e+001, 1.644901e+000, 6.124824e+000, -1.305305e+001, 2.239198e+000, 5.342410e+000, 9.638026e-001, 5.117392e+000, -4.343107e+000, 2.311890e+000, 3.583457e-001, -6.698092e+000, -2.118024e+000, 2.355714e+000, 3.663373e+000, -8.983479e-001, 3.629338e+000, -6.784484e-001, -5.953564e+000, -4.771473e+000, -4.629971e+000, 1.248677e+000, 4.851035e+000, -7.457466e+000, 4.184760e+000, -4.244504e+000, -4.796459e+000, 3.096816e+000, -1.649655e+000, 2.213880e+000, -7.503934e+000, -3.739374e+000, 5.053707e+000, -6.928422e-001, 4.344143e+000, -1.133648e+000, -2.974564e+000, 6.193109e+000, -7.119965e-001, 5.469031e+000, -8.156676e+000, -1.347609e+000, 3.892990e-001, -5.309798e+000, -8.659162e+000, 5.882021e+000, -7.327115e+000, 4.146172e-001, -1.236329e+001, -1.383155e+000, 3.031606e+000, -2.478382e+000, -6.860125e+000, 1.012381e+000, -2.689034e+000, -3.661712e+000, 2.839228e+000, 6.426771e+000, -2.189418e+000, 1.150551e+000, 2.014602e+000, -2.518902e+000, 9.009435e-001, -6.346661e-001, -1.342843e+001, 1.169607e+001, 1.166829e+001, -1.508999e+001, 9.417853e+000, -4.142197e+001, 1.145036e+001, 1.995853e+001, -5.854976e+000, -1.147777e+001, -4.531349e+000, 4.659752e-001, 9.798289e+000, 6.871103e+000, -1.098831e+000, 9.534754e-001, 2.090444e+000, -2.865790e+000, -1.745759e-001, -2.293107e+000, -1.810557e+000, 7.664363e-001, -3.471763e+000, 3.368760e+000, 1.624740e+000, -5.431959e+000, 3.406904e+000, 2.915314e-001, -8.342860e+000, -1.268975e-001, -2.417384e+000, -4.008753e+000, -3.406405e+000, -7.263875e-001, 5.331396e+000, 4.078144e+000, -5.939369e+000, -1.171429e+000, -2.157305e+000, 3.248938e-001, 5.724522e+000, -1.144013e+000, -1.828390e-001, 4.766213e+000, 1.115015e+000, -6.247079e-001, -1.395027e+000, -1.459546e+000, 8.440030e-001, -3.398815e+000, -4.525006e+000, -1.343093e-001, -3.025091e+000, 1.657969e+000, -


© ISO/IEC 2004 — All rights reserved

Copyright International Organization for Standardization
Provided by IHS under license with ISO
No reproduction or networking permitted without license from IHS
Not for Resale

2.122564e+000, 1.393065e+000, 5.135251e+000, 2.894555e-001, -5.000202e-002, 2.335921e-003, 3.867879e+000, -3.082014e+000, 3.009879e+000, -7.197408e-002, 1.190416e-001, -4.044120e-001, 1.486690e-001, 4.197538e+000, -3.690117e-001, -8.979621e-002, 2.668045e+000, -9.343050e-001, 5.410641e-001, 7.444309e-001, 4.424745e+000, -1.506378e+000, 2.183884e+000, 2.493284e-002, 2.739131e+000, -4.699246e+000, -1.117108e+001, -1.460621e+001, 2.814650e+000, 2.892905e+000, -2.251307e+000, -1.075727e+001, 3.998414e+000, 1.371710e-001, 5.196706e-001, -4.026663e+000, -9.505184e-001, -4.209709e+000, 9.320537e+000, 2.856833e+000, 5.733383e-001, 1.066266e+001, -3.478461e-001, -6.746583e+000, -2.274449e-001, 1.233374e+001, -2.531571e+000, 2.015262e+000, 4.698943e-001, -1.456477e+000, 3.071254e+000, 8.228588e+000, -1.387907e+000, -6.701168e-001, -3.869529e+000, 1.000622e+000, 1.066616e+000, 2.923091e+000, 4.913224e+000, -5.748621e+000, 1.512606e-002, -1.135509e+000, -2.740084e+000, 1.067219e+000, -1.337126e+000, 7.241770e+000, -2.742298e+000, -8.812913e-001, 3.891741e+000, -1.033084e+000, -1.228711e+000, -5.256665e+000, -7.430911e+000, 6.594033e+000, 8.455785e-002, 7.164120e+000, 4.953281e+000, -2.055797e+000, 2.171988e+000, -1.262712e+000, 2.473793e+000, 5.950629e+000, 2.936120e+000, -1.062511e+000, -2.453357e+000, -3.021630e+000, -3.745132e+000, -2.058798e+000, 3.669064e+000, 2.338278e+000, -2.514480e-001, 1.651777e+000, -1.507991e+000, 2.037664e+000, 1.080750e+000, 1.281385e+000, 8.901000e-001, -2.562594e+000, -3.782314e+000, -5.479240e+000, 2.586463e-001, 1.052033e+000, 1.386409e+000, -4.994472e-001, -4.487841e+000, 5.754612e+000, -3.122280e+000, -1.152499e-002, -3.954030e+000, 1.036859e+001, 1.026701e+001, 1.599282e+000, 1.500622e+000, 9.404669e+000, -3.742445e+000, -1.160164e+000, -3.343608e-002, 4.891158e-001, 8.985721e-001, -1.514892e+000, 7.440270e-001, -5.663407e+000, 2.998071e+000, -6.479531e-001, 8.100868e+000, -7.021045e+000, 1.951956e+000, 2.189002e+000, 3.364791e+000, 2.747939e+000, 6.252196e+000, 5.893736e-001, -2.880444e-001, -3.970811e+000, 6.444123e-001, -7.520427e+000, -1.730074e+000, 3.645427e+000, -8.196159e-001, 1.071844e+000, 3.763399e+000, 3.307789e+000, -8.221309e-001, -6.756688e+000, -4.128712e+000, 1.501968e-001, -1.982524e+000, -5.023108e+000, -8.055378e+000, -2.047671e+000, 3.646634e+000, -7.979696e+000, -3.164085e+000, 1.216264e+000, 2.196879e+000, -1.835176e+000, -6.024358e-001, 2.014543e+000, 1.039858e+001, 5.962869e-001, -1.464841e+000, -3.020725e+000, -1.294352e+000, -3.085843e+000, 1.036705e+000, -5.925825e+000, 1.014681e+001, -1.042606e+001, 1.355653e+000, -7.725465e-001, 8.807884e+000, 2.598520e-001, 4.399489e+000, 4.908037e+000, 1.719012e+000, -1.363518e+000, -4.266033e-001, 3.931608e+000, -5.476388e+000, 3.715078e+000, -1.754661e+000, -6.094275e-001, 8.250384e-001, 2.370499e-002, -3.836915e+000, -1.435961e+000, 2.474592e+000, -1.307839e+000, -4.458918e+000, 8.388618e+000, -4.704060e-001, 1.467172e+001, 4.484763e+000, -1.457516e+000, -4.550510e+000, 4.126512e+000, -3.564110e+000, -1.702033e-001, 1.047624e+001, -6.553370e+000, -2.206997e+000, -1.801712e+000, -1.828217e+000, 4.511480e+000, 3.021551e+000, 3.133723e+000, 9.472710e-001, 3.150800e+000, -4.532347e-001, 1.670749e+000, -8.624361e-001, 1.084845e+000, -1.041334e-001, 7.815694e-001, -7.048738e-001, 3.051480e+000, 3.145176e-001, 9.100874e-001, 2.316298e+000, 1.048483e+000, -1.372555e-001, 1.029039e-001, 3.802818e+000, 7.275359e+000, -2.482874e+000},

{-5.936173e+000, -5.014678e+000, -1.688291e+001, -4.044879e+000, 8.311000e-001, 3.843505e+000, -2.080907e+000, -4.730682e+000, 8.027735e+000, -6.062339e+000, -4.542692e+000, 1.933212e+000, 9.671753e-001, -3.639073e+000, 2.191310e+000, 8.108040e-001, -5.291589e+000, -7.123026e+000, 5.404732e+000, 1.305196e+001, -1.769870e+000, 8.487437e+000, -1.225917e+000, 4.830066e+000, 4.840338e+000, -1.079864e+001, 7.092877e-001, 4.245472e+000, 5.821336e+000, 3.322893e-001, 8.742157e+000, 2.923061e+000, 1.939460e+000, 4.159358e+000, 6.965355e-002, 3.410148e+000, -5.387339e+000, -3.491741e+000, -2.174459e+000, 5.047679e-001, -4.805778e+000, 6.474161e+000, 2.210248e-001, 1.635091e+000, 3.396227e+000, 5.250828e+000, -8.762707e-001, 7.640550e-001, -3.362081e-001, -5.751731e+000, -1.977439e+000, -1.112277e+000, 1.040078e+000, -1.029087e+000, -4.357953e+000, -1.186595e+000, 2.859235e+000, 2.224181e+000, 7.912133e-001, -6.391523e+000, -4.480422e+000, -6.785202e-002, -4.406663e+000, 1.215515e+000, -1.845856e+000, -1.921403e+000, -2.006575e+000, 3.821884e+000, 6.705581e-001, 1.907368e+000, -3.996610e+000, 9.130392e+000, -2.315306e+000, 2.460397e+000, 2.399756e+001, -9.224628e+000, 9.010426e+000, 2.524842e+001, 2.557382e+001, 7.950344e+000, 2.864906e+000, 6.683054e+000, -6.872904e+000, -8.067660e+000, -2.129163e-001, -4.820822e+000, 7.450428e+000, 8.974551e-001, -3.708341e+000, -8.602011e+000, 3.429110e+000, 1.329007e+000, 3.626883e+000, 2.844046e+000, 1.610003e+000, 5.312005e+000, 8.467486e-001, -4.556243e-001, 6.571931e+000, 1.389037e+001, -2.720009e-001, -1.159667e+000, 2.152391e+000, 1.561682e+000, 1.152614e+000, -1.413254e-001, -3.732405e+000, 1.560890e+000, 7.632101e-001, 3.527648e+000, -6.093491e-001, 8.781967e+000, -1.567368e-001, 6.706928e+000, 1.231866e+000, -2.162424e+000, 3.138993e+000, 4.668459e-001, 5.524934e-001, 2.030224e+000, 3.253945e-001, 4.159753e+000, 2.719130e+000, 1.864075e+000, -1.554503e+000, 1.687589e+000, 2.382640e+000, 7.774430e-001, -5.205753e+000, -2.690088e+000, -2.852231e-001, 6.113213e-001, 1.080369e+000, 1.955000e+000, 2.077807e+000, -6.231725e-001, 4.530621e-001, 6.794680e-002, 1.134353e+000, 4.943656e+000, -

© ISO/IEC 2004 — All rights reserved


Copyright International Organization for Standardization
Provided by IHS under license with ISO
No reproduction or networking permitted without license from IHS
Not for Resale

3.540134e+000, 5.377071e+000, -3.339319e-001, 9.906603e-002, -2.110016e-002, 1.553013e+000, 6.903554e+000, -1.235805e+000, -2.304124e+000, -3.294019e+000, 9.477237e+000, 8.932695e+000, 2.355951e+001, -2.379163e+000, 5.240627e+000, -7.573857e+000, -4.236242e+000, -1.881297e+001, -1.685829e-001, 1.526105e+001, -7.758883e+000, -3.222283e+000, 7.798521e+000, 7.356958e+000, 2.243682e+000, 1.218430e+000, -5.156402e+000, -3.067015e+000, 3.428949e+000, -1.210373e+000, -6.316938e+000, -5.980107e+000, -4.436906e+000, -5.317184e-001, -6.221574e+000, 2.005874e+000, 5.260432e+000, 5.512322e+000, -1.991211e+000, 2.212502e+000, -1.234281e+001, 1.267568e-001, -6.632625e+000, -6.876449e+000, -2.179733e+000, 1.504349e+000, -1.593611e+000, -4.236540e+000, 6.344657e+000, 2.942798e+000, 4.324409e+000, 5.117574e+000, -1.656673e+000, -1.301158e+000, -6.719876e+000, 1.975871e+000, 2.276426e+000, -9.599740e+000, 1.908517e+000, -1.060425e+001, 2.592572e+000, 2.300514e+000, -1.096783e+001, 2.014563e+000, 2.503302e+000, -3.775051e-001, -3.302895e+000, 4.324229e+000, -5.531108e+000, -1.586775e+000, 1.270207e+000, -2.464082e+000, -4.105803e+000, -3.494439e+000, -1.056444e+000, 2.017512e+000, -1.759401e-002, -3.910931e+000, 5.871113e+000, 2.282815e+000, 5.756624e+000, 7.717054e+000, -2.307683e+000, -3.997785e+000, -5.808495e+000, -2.074865e+000, -4.055868e+000, 3.911331e+000, 3.569900e+000, 2.638502e+000, 8.859195e+000, -6.690936e-001, 7.801731e+000, 7.358768e+000, -5.227687e+000, -3.801152e+000, -1.074430e+001, 6.069396e-001, 2.493247e-001, 2.649945e-001, 1.242123e+001, 3.387374e+000, -2.552628e+000, 2.844854e+000, -3.622915e+000, 4.334986e+000, -3.558686e+000, 4.075672e-001, 7.536660e+000, 2.867587e+000, -2.522909e+000, -6.886661e+000, 2.235435e+000, -3.277107e-001, -7.789543e-001, -1.624697e+000, 1.111380e+001, -2.620846e+000, -8.810445e+000, -2.437732e+000, 1.293927e+000, 3.105681e+000, -6.440828e+000, 4.479212e+000, 7.078126e+000, 2.609143e+000, -2.331295e+000, -1.920197e+000, 2.576162e-001, 2.155293e+000, -1.858491e+000, 1.009572e+001, -1.279680e+000, -8.606950e+000, -4.430589e+000, -2.512496e+000, -6.008297e+000, 3.137786e+000, -1.311366e+000, -2.464921e+000, -2.638338e+000, 1.483980e+000, 8.924235e-001, 8.254986e+000, -2.324716e+000, -1.252647e-001, -3.511425e+000, -6.857770e+000, -1.188270e+000, -4.037212e+000, 2.116633e+000, -1.495630e-001, -1.873609e+000, 1.396114e+000, -8.943843e-001, 6.687592e-001, 1.163555e+000, 2.106011e+000, 8.151480e-001, 5.424422e-001, 4.108151e-001, -8.855579e-001, 1.777720e+000, -1.867376e-001, -1.989600e+000, 5.196031e-001, 4.037972e+000, 8.330193e-001, -2.276070e-001, 8.527552e-001, 6.383440e+000, 5.093025e+000, 6.186032e+000, 3.402616e+000, 4.568382e+000, 2.640425e+000, 1.399326e+001, 2.220786e+000, -1.720971e+000, -9.288503e+000, -6.300163e+000, 2.513312e+000, 1.870171e+000, 4.760096e+000, -8.298383e+000, -6.164772e+000, -1.359528e+000, -4.550918e+000, 2.961475e-001, 2.354513e+000, -6.598368e+000, -7.350339e-002, -1.570782e+000, 2.111166e+000, -4.509095e-001, 3.909703e+000, 4.616411e+000, -1.185483e+000, 1.504391e+000, 4.260424e+000, -5.008637e-001, -3.084460e+000, -1.592866e+000, 1.184329e+000, -2.817378e-001, 1.186486e+000, -1.350329e+000, 3.594541e+000, 2.909382e+000, 2.980130e+000},

{-1.085957e+001, 1.712863e+001, 6.676048e-001, 2.914902e+000, 1.955330e-001, -8.423145e+000, 1.542051e+001, -4.354304e+000, -1.704927e+000, 1.843840e+000, 2.664443e+000, -5.029756e+000, 1.379821e+001, -1.716018e+000, 7.917262e+000, -1.089462e+001, 4.932578e+000, -9.129026e-001, -3.301145e-001, -1.034447e+001, 4.267482e+000, 3.574946e-001, -2.667297e+000, -7.543592e+000, -3.371001e+000, 1.771755e-001, -9.852505e+000, 4.951128e-001, 1.106595e+001, -6.983510e+000, -3.266925e-002, 1.115712e+001, -8.145700e+000, -4.504509e+000, 4.974400e+000, -6.743414e+000, -4.976719e+000, -3.537889e+000, -2.207096e+000, 5.545644e+000, 9.507900e-001, 1.641597e+000, 5.810840e+000, -5.227438e-001, -6.648905e-001, 5.439036e+000, -3.007810e+000, -3.419710e+000, -8.865451e-002, -5.755389e+000, 5.318006e-001, 6.964923e+000, 2.068104e+000, -2.611503e+000, 4.927725e+000, 1.783770e+000, -5.366258e-003, -8.980716e+000, 4.139140e+000, -3.465027e+000, 7.951513e-001, -5.101763e+000, -9.207043e-002, -3.836683e+000, 1.781071e+000, 5.244095e+000, -3.608861e+000, 2.436303e+000, 3.911171e+000, -8.405726e+000, 8.676557e+000, -1.731395e-001, -1.112937e+001, -3.904721e+000, 1.162855e+001, -7.228780e+000, 1.346208e+001, 8.950039e+000, 1.201032e+001, -3.464682e+001, 4.671501e+000, 5.137686e+000, -1.937238e+000, 2.687313e-001, 2.503051e+000, 9.695696e+000, -2.263262e+000, -1.140906e+001, -1.892607e+000, -3.471505e+000, 4.331949e+000, -2.222690e+000, -8.880495e-001, 1.918640e+000, 2.282699e+000, -4.502385e+000, -3.196715e+000, -2.041009e+000, -6.485583e+000, -4.025525e-001, 5.675563e+000, -5.228912e+000, -5.427142e+000, -7.652955e+000, 6.710255e+000, 5.453971e+000, 3.688451e+000, -5.653516e+000, -5.134607e+000, 9.548743e-001, -1.298597e+000, 3.015069e+000, 7.245500e+000, -5.340993e+000, -1.146079e+000, -1.079727e+000, -2.439413e+000, -2.801167e-001, 1.721210e+000, -4.880237e+000, -4.240899e+000, 3.140538e+000, -9.938068e-001, -7.080220e+000, -2.092195e+000, 6.377138e+000, -9.726677e-001, 4.408171e+000, 4.100849e+000, -6.897762e-001, -2.887778e-001, -4.591976e-001, 2.674101e+000, 5.383281e-001, 1.995541e+000, -1.954380e+000, -1.685839e+000, 8.243795e-001, -2.377198e+000, 3.069350e+000, -2.310873e+000, 4.021048e+000, 2.696682e+000, 4.552769e+000,


© ISO/IEC 2004 — All rights reserved

Copyright International Organization for Standardization
Provided by IHS under license with ISO
No reproduction or networking permitted without license from IHS
Not for Resale

2.633608e+000, -7.404088e+000, -5.903682e-001, -4.539844e+000, 1.435414e+000, 3.333925e-001, 6.396244e+000, 1.650539e+001, 1.152493e+000, -7.089027e+000, -1.555588e+001, 6.354116e+000, -7.735999e+000, -2.022322e+000, -4.594380e+000, 2.990032e+000, -1.032700e+001, -1.103486e+001, 3.474285e+000, 1.124794e+001, -1.129980e+001, -7.081177e-001, -1.846117e+000, -1.347129e+000, -1.306236e+001, 1.099613e+001, 8.941901e+000, 2.116751e+000, 7.213450e-001, 5.281479e+000, -2.558673e-001, 1.695068e+000, 4.381692e+000, 5.150159e+000, -3.538689e+000, -5.140090e+000, -1.453756e+000, 1.323988e+001, -4.440171e+000, 3.843423e+000, -6.792097e-001, -5.490008e+000, -6.064709e+000, -4.977162e+000, -5.936740e+000, 2.187608e+000, 1.469400e+000, 7.837944e+000, -2.088818e+000, 3.262520e+000, -7.437080e+000, 2.343777e+000, 8.148424e+000, -7.241940e+000, -5.212374e+000, 4.582507e+000, -8.202978e-001, -1.519812e+000, 3.446113e+000, 2.173037e+000, 2.134719e+000, 4.561353e+000, 8.766127e+000, -1.013349e+001, 1.570957e+000, -8.612150e+000, 3.253060e+000, -4.680616e+000, 3.029988e+000, -2.838760e+000, 5.032509e+000, 3.423843e+000, -7.467292e+000, 9.021062e+000, 5.956706e-001, 3.087866e+000, 6.666897e+000, 9.593970e+000, -7.270652e-001, 9.739543e+000, 1.478577e+000, 3.873693e+000, 6.068552e+000, -1.566257e+000, 1.920611e+000, 2.091861e-001, 4.491967e+000, 1.135108e+001, 1.691611e+000, -4.178095e+000, -4.980705e+000, -6.841114e+000, 5.313110e-001, 4.952094e+000, -4.646302e-002, 1.126032e+001, -1.808911e+000, -5.016949e+000, 1.832938e+000, 8.571622e-001, -1.411755e+000, -6.953039e+000, -3.301991e+000, 2.505714e+000, -6.455218e+000, -1.855645e+000, -4.552850e-001, 7.791427e+000, 1.378579e+000, 1.142381e+000, -4.213997e+000, -3.774846e+000, -1.489934e-001, -1.034209e+000, 4.418539e+000, 2.733682e+000, 3.515292e+000, -5.152028e+000, -2.186845e+000, -4.238121e+000, -4.486575e+000, -7.902512e+000, -7.148247e+000, 3.010978e+000, 5.391337e+000, -1.282767e+000, -7.501084e+000, 7.057279e-001, 4.424409e+000, 5.216853e+000, -3.910823e+000, 6.433580e+000, 1.756293e+000, 3.352536e-001, -1.185006e+000, 4.853276e+000, -4.224191e+000, 9.088857e+000, 3.007953e+000, -4.520793e+000, 2.215566e+000, 1.262228e+001, -3.661842e+000, 4.316126e-001, 2.609438e+000, 7.391404e+000, 1.080085e+000, -8.190510e+000, -5.779529e-001, -6.476946e-001, -4.755440e+000, -6.830692e+000, 5.999979e+000, 6.060865e+000, -6.499742e+000, 2.525381e+000, 5.178547e+000, 1.024113e+000, 5.166047e+000, 1.050704e+000, -1.973450e-001, 2.206589e+000, 1.995771e+000, 2.107842e+000, 2.530693e+000, -3.129897e+000, -5.479012e+000, 7.122495e+000, -1.017379e+000, 2.641752e+000, -2.345677e+000, -4.024855e+000, -3.311839e+000, -9.548355e+000, 1.162446e+000, -8.574511e+000, -3.298192e+000, -3.626431e+000, -3.966489e+000, -4.331598e+000, 1.083012e+001, 6.358337e+000, -4.019515e-002, -2.579062e+000, -9.115057e+000, 5.860552e+000, -8.538957e+000, 2.522415e+000, 2.882035e+000, -1.444929e+000, 1.290737e+000, -3.842263e+000, -5.726873e+000, 6.502057e-001, -2.108590e+000, -4.068573e-001, 1.346355e+000, 1.956250e-001, 1.833067e+000, 3.794220e-001, 5.762711e+000, 2.629490e+000, -7.083526e-001, -1.448049e+000, -1.817824e+000, -1.099895e+000},

{1.468929e+000, -1.112108e+001, 5.391031e+000, 9.526314e+000, 3.519024e-001, 3.991213e-001, -6.258361e+000, 8.371852e+000, 2.100243e+001, -2.177654e+000, 1.186916e+001, 4.990614e+000, 4.991449e+000, -1.110529e+000, 7.197940e+000, 6.939813e-001, 4.445331e+000, -1.611428e+000, -1.049862e+001, -1.757469e+000, 3.294667e+000, -6.505931e-001, 1.192766e-001, -2.823463e+000, -4.403595e+000, 2.620682e+000, -2.631493e-001, 8.210824e+000, -3.604931e+000, -9.283372e+000, -1.626808e+001, -8.848931e+000, 2.480553e+000, -7.746166e+000, -4.536293e+000, -5.885159e-001, 4.588920e+000, -9.466383e+000, -3.846636e+000, 1.714649e+000, 6.286636e+000, 3.157448e-001, 2.961518e+000, 2.736445e+000, 2.030975e+000, -9.829738e+000, -2.332834e+000, 3.003320e+000, -2.916977e+000, -2.089613e+000, 3.570474e+000, -3.720992e-001, -1.824551e+000, 2.325017e+000, -1.369546e+000, 1.908507e+000, -2.938990e-001, -1.094151e+001, -6.435619e+000, -1.857993e+000, -2.599616e-001, 1.036313e-001, -1.332384e+000, -2.971134e+000, -6.966512e+000, 2.070002e+000, -4.047145e+000, -3.219951e+000, 7.109840e+000, -3.909599e+000, -8.547499e+000, 1.083063e+000, -1.271490e+000, -1.236780e+001, 1.188375e+001, -3.448262e-001, -2.147767e+001, -6.693647e+000, 1.190701e+000, -1.373649e+001, -4.431174e+001, 1.056831e+001, 1.551737e+001, -1.006627e+001, -8.732907e-001, -1.006795e+001, 6.211929e+000, -1.508075e+001, -7.206178e+000, -8.405041e+000, 1.182519e+000, 3.053797e+000, -5.346731e+000, 7.075426e-001, 4.667304e-001, 1.175155e+001, 3.916552e+000, 6.708933e+000, -6.197209e+000, 1.247564e+001, -4.181734e-001, 1.014507e+001, 3.419550e+000, 1.651522e+000, -8.987331e+000, -1.254030e+001, 8.647391e-001, 2.557062e+000, -6.197030e+000, 7.460093e-001, -2.009661e+000, -1.468547e+000, -2.039690e+000, -1.635601e+000, 2.893152e+000, 8.817566e-001, 5.025146e+000, 1.796119e+000, 2.332717e+000, -3.935738e-001, 3.792376e+000, 4.244319e+000, 8.283032e+000, -2.793327e+000, -7.690241e+000, -5.385155e+000, 1.159176e+000, 1.887731e+000, -3.845486e+000, -5.782733e+000, 3.630375e+000, -9.709061e-001, -3.067573e+000, 5.165199e+000, 2.551633e+000, 1.485296e+000, -3.438692e+000, 3.415539e+000, -1.707723e+000, 9.534789e-001, -3.346734e+000, -1.565321e+000, 5.017513e+000, -2.839113e+000, -2.842502e+000, -1.705668e+000, -2.190767e+000, 1.952251e+000,

© ISO/IEC 2004 — All rights reserved


Copyright International Organization for Standardization
Provided by IHS under license with ISO
No reproduction or networking permitted without license from IHS
Not for Resale

2.458659e+000, 2.919931e+000, 1.792103e+000, 3.880387e+000, -3.511351e-001, -4.947202e+000, 1.622847e+001, 2.019778e+000, 1.010466e+001, 6.215076e+000, -1.472420e+001, -9.311740e+000, 3.314384e+000, -3.656614e+000, 2.678369e+000, -7.357491e+000, -8.157235e+000, 4.940148e+000, -4.671163e+000, -3.003229e+000, -5.811502e+000, -9.399216e+000, -3.828165e+000, 7.331592e+000, 5.300386e-002, -7.676884e+000, 4.416651e+000, 4.019792e+000, -2.073378e+000, 1.234114e+000, -4.279632e+000, 1.811847e+000, 2.508456e+000, 9.776205e+000, 2.255171e+000, 3.048890e+000, 7.865542e+000, 3.798049e+000, -8.922035e+000, -5.924820e+000, -1.103297e+000, -9.498618e+000, 5.633771e-002, -8.487805e-001, -6.362683e+000, 7.447345e-001, 1.830481e+000, -2.561699e+000, -1.442172e+000, 7.175739e+000, -4.983064e+000, -8.985269e-001, -3.779684e+000, -3.334727e-001, 2.436236e+000, 5.544240e-001, 3.563056e+000, -9.959041e-003, -4.357097e+000, 4.623471e+000, -4.917062e-001, 6.714343e+000, 2.726719e+000, -8.207277e+000, -8.235819e+000, 4.094735e-001, 3.519125e+000, -7.775381e+000, 2.508350e+000, -4.613224e+000, 8.568115e+000, 4.046816e+000, 3.418806e+000, -2.363869e+000, 7.158382e-001, 1.816634e+000, -2.373949e-001, -2.497245e+000, 2.353467e+000, -3.129165e+000, -5.322734e+000, -4.641408e+000, -6.092843e+000, -9.550584e+000, -1.927680e+000, -1.700663e+000, 3.525847e+000, -1.339958e+000, -2.416987e+000, -1.066475e+000, 1.226167e+001, -5.417407e+000, 5.718811e+000, -5.302923e+000, 3.239746e+000, 3.409735e-001, 4.750692e+000, -2.733062e+000, 1.636380e-001, -4.106073e+000, -4.816382e+000, 2.073760e-001, 5.897938e+000, 2.668000e+000, -7.213498e+000, 6.416695e+000, 2.387835e+000, -5.204265e+000, 1.657012e+000, -1.060716e+000, -6.539392e-001, -5.986069e+000, 6.944595e+000, -2.620741e+000, 8.743323e-001, -3.170816e+000, 1.474167e+000, -9.476923e+000, -4.199795e+000, -8.411875e-001, 4.069504e+000, -4.826227e-001, -5.581890e-001, -6.325478e+000, 5.368155e+000, 4.455401e+000, 7.084996e+000, 4.290370e+000, -1.272473e+001, -6.473522e+000, 3.135059e+000, -6.699303e+000, -1.696736e+000, 5.358490e-001, 1.280189e+000, -7.281792e+000, 3.477449e+000, -5.527690e+000, 4.083441e+000, 2.122188e+000, -1.093031e+000, 9.636473e-001, 3.227592e+000, -1.598285e+000, 1.228792e+000, 6.482382e+000, -5.950139e+000, 2.436889e+000, -5.078787e+000, 6.923537e+000, 2.770952e+000, -3.632573e+000, -7.678123e+000, 4.018223e+000, -1.108397e+000, -3.087350e+000, 4.477740e+000, -6.027521e+000, -2.342816e+000, -3.167195e+000, -2.325834e+000, -3.012274e+000, -9.065735e+000, -2.768120e+000, 1.407678e+000, -1.153106e+001, -3.129510e+000, 2.186671e+000, 3.317009e+000, 1.235958e+000, -7.072424e+000, -1.093247e+000, -2.605019e+000, 2.947302e+000, 5.071610e+000, 3.775590e+000, 5.981412e+000, 4.468981e+000, -1.264976e+001, -7.064989e+000, 1.719738e-001, -2.327244e+000, -4.810663e+000, 5.610721e-001, -4.151356e+000, 3.232686e+000, 2.678215e+000, -3.983504e+000, 5.004139e+000, -3.027165e+000, -5.200440e+000, -1.594736e+000, 2.462649e+000, 1.499948e-001, 9.193036e-001, -4.536119e+000, -4.564189e+000, -5.762698e+000, 3.288694e+000, -2.412150e+000, 4.417146e+000, -2.443066e+000},
{-6.964605e+000, -8.507751e+000, -3.085034e+000, 1.398856e+001, -1.178328e+001, 1.247050e+001, -5.313955e+000, 2.427683e+001, -7.541248e-001, -6.932117e+000, 9.791494e+000, -2.237160e+000, 1.316323e+001, 8.107400e+000, 2.150667e+000, -9.741797e+000, -4.259280e+000, 8.905757e+000, -5.773542e+000, 2.195229e+000, -5.421147e+000, 1.347161e+001, 1.283933e+000, 4.062997e+000, 4.878118e+000, 9.601827e+000, -5.921565e+000, 5.371125e+000, 3.072349e+000, 5.723694e+000, -5.256069e+000, -4.026938e+000, 2.402749e+000, -5.915312e+000, 6.496441e+000, -1.684334e+000, -6.847861e-001, 3.091602e+000, 1.507048e+000, 9.633947e+000, 3.322837e+000, -5.724201e+000, -2.109114e+000, 7.647986e+000, 3.461865e+000, 1.138641e+000, -4.843381e-001, 1.356108e+000, -7.292764e+000, 2.145158e+000, -3.811543e+000, 2.203089e+000, 3.492607e+000, 2.893491e+000, 7.495866e+000, 4.845200e+000, 1.792611e+000, -2.612747e+000, -1.839533e+000, -2.041115e+000, -4.622591e+000, 3.619195e+000, 2.012836e+000, -1.516809e-002, 5.038800e+000, -6.258306e+000, -1.600798e+000, 1.590470e+000, 1.165471e+000, 2.003590e+000, 2.143334e+000, 2.910664e+000, 2.273572e+000, 1.880496e-001, 6.942925e+000, -1.246979e+001, 9.045940e+000, -1.831431e+001, 2.881160e+001, -1.832475e-001, -8.338519e+000, 2.413627e+000, -3.165341e+001, 2.093666e+000, -8.548115e-001, -8.914348e+000, -1.635131e+001, -4.006253e+000, -3.489829e+000, -7.568613e-001, 1.511315e+000, 1.501539e+000, 1.442173e+000, -6.046294e+000, -8.698082e+000, -6.203612e+000, -4.251747e+000, -2.747672e+000, -6.553636e+000, -8.930311e+000, -1.244888e+000, -2.215013e+000, 5.023679e+000, 1.614652e+000, -2.891747e-001, -4.284406e+000, 1.594739e+000, -5.920642e+000, 2.244911e+000, -6.787862e+000, -8.501770e-001, -1.104187e+000, 4.342142e+000, 6.209065e+000, 4.381530e+000, -1.571192e+000, -2.455091e+000, -3.705578e+000, 3.230602e+000, -6.088427e+000, 5.185533e+000, -7.486899e+000, -5.131454e+000, -6.319313e+000, 1.790867e+000, 5.921963e-002, 8.295362e-001, 1.678659e+000, -5.205793e+000, 1.385918e+000, -4.139764e+000, 2.074735e+000, 6.013262e-001, 8.593547e-002, 3.141892e+000, 3.249741e+000, -1.803676e+000, -1.575734e-001, -3.590602e+000, 1.549965e+000, 1.781373e+000, 5.533999e-001, 1.115941e+000, 4.487370e-001, -4.076163e+000, 4.260976e+000, 1.538916e+000, 1.731076e+000, -6.805195e-001, -4.338738e-001, -5.463166e-001, -3.132115e-001, -3.507138e+000, 4.099760e+000, 1.128869e+001, 1.190892e+001, 1.237668e+001, -9.046154e+000, -6.486449e+000,


© ISO/IEC 2004 — All rights reserved

Copyright International Organization for Standardization
Provided by IHS under license with ISO
No reproduction or networking permitted without license from IHS
Not for Resale

2.935284e+001, -5.656800e+000, -4.702650e+000, -2.521297e+000, -2.045212e+000, 4.137572e+000, -2.207710e+000, -5.579661e+000, 6.776039e+000, -6.868109e+000, 1.277327e+001, 8.025391e+000, -8.712317e+000, 5.094096e+000, -5.426629e+000, 8.102318e+000, -1.876836e+000, 5.511001e+000, -2.989490e+000, -4.096927e-001, 2.806950e+000, 3.461371e+000, 7.329297e-001, -7.185344e+000, 1.428238e+000, 5.524799e+000, 7.556640e+000, -1.778815e+000, 1.150108e-001, -8.118653e-001, 3.305109e+000, -1.043311e+000, -1.062202e+001, 9.874236e+000, 9.058803e+000, -1.110752e+000, 1.324299e+001, 7.504414e+000, -2.531285e+000, 8.394571e+000, -8.843313e-001, 4.248458e-001, -1.356261e+001, -3.631721e+000, 3.001872e+000, -5.766759e+000, 7.951443e+000, 5.677202e+000, 4.816742e+000, -7.504443e-001, -3.848205e+000, -4.672239e-001, -1.952927e+000, -2.846237e+000, 3.101089e+000, 5.034230e+000, 1.685056e+000, -1.147920e+000, 4.810121e-001, 5.691490e+000, -2.058356e+000, -1.631059e+000, -8.606722e-001, -5.172832e+000, 5.395662e+000, 2.839803e+000, -3.900492e+000, -1.125763e+000, 4.472605e+000, 6.564020e+000, 2.540140e+000, -5.343614e+000, -1.557710e+000, 3.454491e-002, -4.263554e-001, -1.195536e+000, -1.139389e+001, 1.083876e+001, -2.012000e-001, -3.052124e+000, 1.756598e-002, 6.711662e-001, 5.680548e+000, 7.980172e+000, 3.488324e-001, -6.558941e+000, -5.054718e+000, -2.509207e+000, 5.394948e+000, 1.580333e+000, 7.329562e+000, -9.131660e+000, 2.194889e+000, 1.652080e+000, 3.354157e+000, 3.484084e-001, -4.908774e+000, 8.356768e+000, -1.450027e+000, -5.536988e+000, 5.018128e+000, 3.378124e+000, -2.737998e+000, -2.507934e+000, -9.114691e+000, 4.680263e+000, 1.749998e+000, -1.481147e+000, -6.768463e+000, -3.809461e+000, 3.621531e+000, -5.188025e+000, 3.745443e+000, 6.043148e+000, 2.180756e+000, 4.890884e+000, 8.139444e+000, 8.589974e+000, -3.992080e+000, 6.029169e+000, 3.690604e+000, -6.078818e+000, -5.006294e+000, 6.118717e+000, -9.633290e+000, 2.084119e+000, 7.414884e+000, -6.251175e+000, 3.822832e+000, 1.119928e+000, 2.161587e+000, 7.271361e+000, -1.166074e+000, 3.280589e+000, 4.967275e-001, -4.385078e+000, -8.555684e-001, 2.593593e+000, -2.884678e+000, 1.755728e+000, -1.198905e+000, 2.825583e+000, 8.673408e+000, -6.958297e+000, 8.343676e-001, 1.240826e+000, -3.671076e+000, -2.291925e+000, 1.525208e+000, 7.719755e-002, 9.278437e-001, -4.278280e+000, 2.832191e-001, 1.945304e+000, 2.787997e+000, 2.552345e+000, -4.574911e+000, -2.510238e+001, -6.254539e-001, 2.015520e+000, 2.348734e+000, -3.307731e+000, -4.076690e+000, -3.469788e+000, -4.361815e+000, 3.556880e-001, -3.540595e+000, 4.611656e+000, 3.818096e+000, -1.598101e+000, 2.523986e+000, 7.959839e+000, -1.651066e+000, -3.176017e+000, -1.199321e+000, 1.411955e+000, -2.900096e+000, 4.608634e-002, -2.378771e+000, 5.526613e+000, -4.610833e+000, -3.996133e-001, -2.114337e-001, 1.939961e+000, -6.505556e+000, 4.008497e+000, -1.434817e+000, -1.671241e+000, 2.809305e+000, 4.440943e-001, -1.461122e+000},

{8.723213e+000, -6.524777e-001, 6.628754e+000, -4.621193e+000, 3.100187e+000, 1.482034e-001, 6.000386e+000, -2.916245e+000, -1.214786e+001, 1.873373e+001, -1.703643e+001, 9.127175e+000, -7.524624e-001, -9.101214e+000, -5.764476e+000, 1.395084e+001, -4.993561e+000, -1.149069e+001, -2.829262e-002, -2.192731e+000, -4.297808e+000, -1.195548e+001, 6.054435e+000, -3.271409e+000, 3.539770e+000, -8.861496e+000, 3.974234e+000, 2.132541e+000, -5.727452e+000, 4.823227e+000, -6.679023e-002, 5.301647e-001, 3.395695e+000, 4.750629e+000, -1.465885e+000, 2.006116e+000, -5.762836e+000, 2.274749e+000, 4.072932e+000, 1.554800e+000, -3.528414e+000, 1.084365e-001, 4.138480e-001, 4.980770e+000, -1.657665e+000, -4.514299e+000, 2.464644e+000, -6.654577e-001, 5.074867e+000, 4.044672e+000, 9.675950e+000, -5.802534e+000, 5.197071e+000, 5.494698e+000, -4.437152e+000, 3.947937e+000, 4.453508e+000, -1.742123e+000, -3.669215e-001, 2.569696e+000, 2.790054e+000, 7.085829e-001, -4.597174e+000, 8.604466e+000, 7.050747e-001, 2.636085e-001, 3.250306e+000, 6.102148e+000, 9.286326e-001, 3.191780e+000, 2.811126e+000, 1.788920e+000, 1.001465e+000, 1.175418e+001, 3.495839e+000, 1.564822e+001, 2.018833e+001, -4.677657e+000, 2.441662e+001, -3.924521e+000, 2.006080e+001, 1.881241e+001, 3.939470e+001, 6.853962e+000, -1.992314e+001, -8.463647e+000, 6.603811e+000, 1.096631e+000, 1.492606e+001, -1.518630e+001, -2.951416e+000, 2.927403e+000, -1.059240e+001, -8.180385e-001, -2.185106e+000, -1.498224e+000, 4.862944e+000, 4.642853e+000, 7.763718e+000, -3.643917e+000, -9.043568e+000, 2.349406e+000, -5.135745e-001, 5.329230e+000, -3.282180e-001, -2.601692e+000, -4.297878e+000, 2.479301e+000, 1.139279e+001, -2.127663e+000, 9.508017e+000, -5.896436e+000, -4.508790e+000, -9.106218e-001, 2.096765e+000, -6.502576e+000, -2.149392e+000, -4.388553e+000, 4.218607e+000, 2.795919e+000, 6.817391e+000, -6.104736e-001, 4.673626e+000, 2.550959e+000, -4.688692e-002, -5.784601e-001, 1.184632e+000, 9.464725e+000, -2.652493e+000, -3.007506e+000, 4.795096e+000, -1.695390e+000, -7.283123e-001, 7.075756e-001, 2.217493e+000, -1.547018e+000, 6.331432e-001, 2.005871e+000, 2.999180e+000, 1.195416e+000, 8.819636e-001, -4.220499e+000, -2.433834e+000, 2.409386e+000, 5.454163e-001, 1.911592e+000, -6.773621e-001, 5.032091e+000, -3.245086e+000, 1.307461e+000, -3.763748e+000, 7.724019e+000, 2.319882e-001, 9.624862e+000, -6.089702e+000, 6.466070e+000, 1.764313e+001, 8.965992e+000, -1.373456e+001, 3.320353e-001, 2.145576e+000, 3.922535e+000, 4.175136e+000, 8.457795e+000, -1.412644e+001, 2.057835e+000, -3.563514e+000, -1.336414e+000,

© ISO/IEC 2004 — All rights reserved


Copyright International Organization for Standardization
Provided by IHS under license with ISO
No reproduction or networking permitted without license from IHS
Not for Resale

3.246032e+000, -7.778539e+000, 3.494602e-002, 1.057189e+000, -9.649579e+000, -1.565591e+000, -1.047878e+000, -7.826671e-001, 6.043688e-001, -5.506134e+000, -3.053248e+000, -1.704046e+000, 9.437528e-001, -1.006131e+001, -3.308929e+000, -5.120632e+000, -3.881639e+000, -4.011942e+000, -8.205125e+000, -4.186806e+000, 2.338273e+000, -1.880296e+000, -1.208550e+001, -1.010061e+000, -1.578073e+000, -1.112846e+001, 8.885414e-001, 5.815258e+000, -1.638669e-001, 3.498859e+000, 1.859774e+000, 7.960311e+000, -2.623190e+000, 8.507966e+000, 1.298295e+001, -2.394618e+000, -2.183857e+000, 6.508436e+000, 6.579627e-001, 2.264690e+000, -4.242732e+000, 1.875841e+000, 2.365974e+000, 9.707520e+000, -6.155062e-001, 4.879263e+000, -1.009091e+001, 3.159245e+000, -9.381639e-001, 3.711682e+000, -4.311549e+000, 9.196717e-001, 2.102883e+000, -4.648289e+000, 5.444031e+000, -8.494454e-001, 1.741647e+000, 8.605940e+000, 7.799165e+000, -5.903372e+000, -3.891659e+000, -2.007362e+000, -1.151504e+001, 8.889183e+000, 3.215774e+000, -4.059989e+000, 4.455926e+000, -1.103081e+000, -1.573852e+000, -3.180442e+000, 7.089640e+000, 1.395759e+001, -4.725537e+000, -4.778932e+000, -1.524520e+000, -7.104593e-001, -1.044459e+001, 5.231321e+000, 2.435558e-001, -1.320155e+000, 1.611989e+000, 1.393016e+000, 3.683077e-001, 2.230043e+000, 5.384458e-001, -6.480804e+000, -3.497489e+000, 4.324835e+000, -3.523825e+000, 3.577180e+000, 3.967036e+000, -1.186915e+000, -3.964380e+000, 3.006905e+000, 1.807269e+000, -1.729496e+000, 2.314409e+000, 1.130424e+000, -5.342504e-001, 3.250648e+000, 1.646376e+000, 7.356827e+000, 1.259771e+000, 2.296083e+000, -8.833325e+000, 2.521727e+000, 4.511093e+000, 1.205188e+001, -5.882980e+000, 5.095482e+000, -3.803830e+000, 7.858580e-001, -6.411195e+000, -1.227959e+000, 1.611521e-002, 7.203234e+000, -2.779363e+000, -2.875477e+000, 1.131041e+001, -3.170189e+000, -2.110996e+000, -4.911195e+000, -1.415900e+001, -4.915920e+000, 1.167298e+000, 2.078977e+000, -5.354882e+000, -3.768296e+000, -4.951343e+000, -3.521812e-001, 7.841044e-001, -1.717955e+000, -2.030276e+000, 1.454529e-001, 2.433280e+000, 3.699436e+000, 3.036032e+000, 7.357878e+000, -1.668013e+000, 5.092234e-001, -2.044139e+000, -2.706094e+000, 6.064717e+000, -3.438280e+000, -5.056803e+000, 2.242714e+000, 8.807213e-001, 1.974275e+000, 2.002417e+000, 8.158338e+000, -8.431659e+000, -8.544501e-001, 4.861387e+000, 1.292139e+000, 7.883345e-001, 1.015625e+001, 6.921264e+000, -3.020995e+000, 3.389125e+000, -7.636468e+000, -1.687323e+000, -7.700815e-001, 6.762135e+000, -8.373690e+000, -6.753640e+000, 4.851481e+000, -1.998116e-002, -8.193647e+000, -4.460745e-001, -1.743476e+000, 3.294772e-001, -4.342925e+000, -4.000603e-001, -1.038105e+000, 8.162398e+000, 5.184497e+000, -2.697126e-001, 2.357271e+000, -2.474633e+000, -2.500576e+000, -4.465739e+000, -1.813944e-001},

{-2.921640e+000, -4.315757e+000, -9.702057e+000, -4.588179e-001, -7.325863e-001, 6.311016e+000, 1.048587e+001, -5.878366e+000, -4.367768e+000, -1.189935e+000, 1.148233e+001, 1.454345e+000, -8.957497e+000, -1.549108e+000, 8.104336e-002, -4.950783e+000, -1.033568e+000, 1.271745e+000, -9.727143e-001, 1.100576e+000, -2.056801e+000, 2.208390e+000, 2.328531e+000, 1.931195e+000, -1.059620e+001, 3.924946e+000, 1.025042e+000, -4.192753e+000, -3.622138e+000, 1.221188e+000, -4.354080e+000, -3.549688e+000, -8.688152e+000, -1.710630e+000, 3.829421e-001, -2.060609e+000, 2.683055e+000, 2.012110e+000, 1.099680e+000, 1.070406e+001, 4.070501e-001, -2.881937e+000, 1.737031e-001, -7.958170e+000, -8.127583e+000, 6.190862e+000, 5.825021e-001, 3.730186e+000, 1.962914e+000, 7.798062e-001, -1.602270e+001, 9.747596e-001, -1.869925e-001, -1.302385e+000, 1.209886e+000, -1.057249e+000, 5.075025e+000, -2.216879e+000, 1.416384e+000, -3.565250e-001, 4.659766e-001, 3.864002e+000, -7.361933e+000, 3.203337e+000, -5.434271e+000, -7.132482e+000, 2.805967e+000, -3.855364e+000, 9.567579e+000, -3.314715e-001, -2.729457e+000, -7.704735e+000, -3.291520e+000, 1.821796e+001, -5.295812e+000, -1.291176e+001, -1.543964e+001, -3.025143e+001, -2.311973e+000, -6.741630e+000, 2.457964e+001, -1.071827e+001, 7.903381e+000, -3.264137e+001, 1.616715e+001, -1.326926e+001, 3.826703e+000, 2.547567e+000, -1.109737e+001, 2.890695e+000, 1.064368e+001, 2.478673e+000, 1.240485e+000, -3.420007e+000, 3.554759e+000, 7.354093e-001, -1.185533e+000, -7.704251e+000, 2.840032e+000, 5.488329e+000, 1.271357e+000, 9.542315e-001, 2.962086e+000, -7.315383e+000, -3.559829e+000, 2.095298e+000, -1.228702e+001, -3.462472e+000, -3.069417e+000, 1.144317e+000, -2.593034e+000, 2.428189e+000, -2.085539e+000, -5.726453e+000, 4.085709e+000, -1.401787e+000, 7.764376e-001, -8.039140e-001, -7.942977e+000, 1.714726e+000, -2.571530e+000, 7.863035e+000, 2.627078e+000, 3.084126e-002, -3.894592e+000, 9.148905e-001, 2.303158e+000, -2.489958e+000, 4.200869e+000, -4.641243e+000, -1.579899e+000, -1.033569e+000, -5.491437e+000, -1.476750e+000, 3.905076e-001, 3.509896e+000, -2.254360e+000, -4.741758e+000, -8.636783e-001, -3.791667e-001, -4.514826e+000, 5.332130e+000, 5.083244e+000, 5.985063e+000, -4.285913e+000, 4.457214e+000, -1.193535e+000, -5.651579e+000, 2.163257e+000, 5.862578e+000, -2.257234e+000, 4.009962e+000, 9.956787e+000, 1.038679e+001, 5.230583e-001, 1.743049e+001, -1.273944e+001, -1.085739e+001, 8.644495e-001, -1.804711e+001, 9.256794e+000, 3.407392e+000, 4.438930e+000, -2.201226e+000, 1.708386e+001, -1.018713e+001, 8.067591e-001, -7.784543e-001, 1.183126e+001, 1.764924e+000, -1.101339e+001, -3.895831e+000,


© ISO/IEC 2004 — All rights reserved

Copyright International Organization for Standardization
Provided by IHS under license with ISO
No reproduction or networking permitted without license from IHS
Not for Resale

-4.664512e+000, 2.101057e+000, -7.693883e+000, 7.728197e+000, -1.080502e+001, -1.937126e+000, -9.660390e-001,
1.163258e+001, -8.834100e-001, 3.530942e+000, 4.268276e+000, -6.169552e+000, 6.712940e-001, -6.011010e+000, 1.357682e+001,
4.790946e+000, 3.384343e+000, -3.351497e+000, 2.084414e-001, -2.442428e+000, -6.869094e-002, 5.487227e+000, 5.965562e-003,
8.767249e+000, 6.550117e+000, 1.855281e+001, -8.324690e-001, -1.424504e-001, -1.924797e+000, 3.752959e+000, 7.269157e-001,
5.996427e+000, 1.869303e+000, -2.412533e+000, -4.170055e-001, 6.548409e+000, 1.120328e+001, -1.196083e+001, -
6.121520e+000, 2.841256e+000, -2.970417e+000, 6.042317e-001, 1.263454e+000, -1.216249e+001, 1.046891e+001, -8.533331e+000,
3.680304e+000, 6.360618e-001, -6.337585e-002, -1.100120e+001, -1.131423e+000, 3.835543e+000, 4.274451e+000, -8.724609e-001,
-4.424144e+000, 3.702121e+000, -3.979142e-001, 1.917391e+000, 1.206577e+000, -6.949157e+000, -3.282540e+000, -
4.114994e+000, 6.111078e+000, 2.026638e+000, 2.462199e+000, -2.347456e+000, -1.407744e-001, -8.535408e+000, -9.239299e-001,
-1.170628e+000, 4.187231e+000, 9.548861e-001, 4.393722e+000, -4.939025e-001, -1.804349e+000, -3.774930e+000, 5.324289e-001,
1.206758e-001, 1.316397e+000, 1.094374e+001, -2.554383e+000, 4.813283e+000, -7.502906e+000, 4.496056e+000, 2.455989e+000,
-1.533733e+000, 1.093854e+001, -4.160260e+000, 1.258540e+001, 1.123895e+000, 4.195022e+000, -9.553292e+000, -
5.692738e+000, 2.451788e+000, 6.520737e+000, -5.781086e+000, -1.417826e+000, 3.516306e+000, -9.121260e+000, 6.506525e-001,
-5.455328e-001, -8.579751e+000, -1.313711e+001, -5.131742e+000, -2.325885e+000, 5.570652e+000, 3.740950e+000,
9.328787e+000, 1.460096e+000, 1.786998e+000, -4.734875e+000, -1.349648e+000, 4.993691e+000, -1.452296e-003, 1.256909e+000,
-9.582806e-001, 3.931933e-002, -4.824353e+000, -1.000927e+001, 4.929307e+000, -3.434479e+000, 5.209797e-001, 6.232404e-002, -
1.279513e+000, 1.029811e+000, -8.311648e+000, 8.500059e-001, -6.555437e+000, 3.287475e+000, -2.454061e+000, -
3.505798e+000, -2.009185e+000, 1.296862e+001, 1.008290e-004, -1.320922e+000, 1.427618e+000, 5.677712e+000, 5.742618e+000,
-2.624687e-001, 1.090859e+000, -2.012809e+000, 6.410375e+000, -2.856073e+000, -2.128004e+000, 1.873032e+001, 1.086572e-001,
-2.142937e+000, -2.019146e+000, -5.998320e+000, -9.840403e+000, -7.649895e+000, -2.645872e+000, 2.141737e+000, -
3.784283e+000, 8.537707e+000, -4.585149e+000, -3.291524e+000, -1.611360e+000, -1.458744e+000, -2.148853e-001, -
3.276896e+000, 1.362021e+000, -6.247405e+000, 3.982677e+000, 3.225129e+000, 4.463646e+000, 4.014444e+000, 5.515555e+000, -
5.090498e+000, -4.897062e+000, -5.162555e+000, -4.104170e+000, 4.786962e+000, 7.121474e+000, 4.534660e-001, 9.191333e-001,
3.624682e-001, -2.737091e+000},
{1.443372e+001, -3.307702e+000, 1.641689e+001, 7.727401e+000, 5.458166e+000, -3.030662e-001, 6.551746e+000, 1.158516e+001,
2.286533e+000, 2.456505e+000, -2.317991e+001, -2.137330e+000, 9.716191e+000, 1.460319e+001, 1.141126e+000, -
8.427275e+000, -2.078735e+000, -3.117442e+000, -1.287448e+000, -1.276969e+001, -9.363598e+000, -1.186512e+000, -
2.250320e+000, 5.951429e+000, -2.916100e+000, -1.111011e+001, 3.052346e+000, 7.894101e-001, -1.301739e+001, -
6.588587e+000, 4.765732e+000, -6.502007e+000, -4.457765e+000, -4.303349e+000, -5.461159e+000, 9.134599e+000,
3.603186e+000, 8.578747e+000, 1.732660e+000, 1.045353e+001, 5.852306e+000, -4.490529e+000, -5.055137e+000, -
7.997567e+000, 7.783987e+000, -7.485057e-002, -6.772276e+000, -3.270077e+000, 6.590822e+000, -1.484638e+001, -
7.116015e+000, 1.280721e+000, -9.289678e+000, 1.074474e+001, 1.758926e-001, 6.473587e-001, 5.395218e+000, -2.749501e+000, -
5.864624e-001, -1.232370e+001, -4.924307e+000, 2.315397e-002, -3.681794e+000, -2.251297e+000, 7.285257e+000, 8.925871e-002,
-5.561885e+000, -3.588156e-001, -4.127386e+000, -3.021389e+000, 3.285260e+000, -1.268494e+001, -7.579840e+000,
1.188589e+000, -7.495496e+000, -1.093626e+001, 7.313545e+000, 2.022612e+001, -1.701883e+001, 7.056081e+000, -
1.777850e+001, -4.103225e+001, 1.111931e+001, -2.059832e+001, -3.031296e+001, -7.169646e+000, -2.450613e+001, -
2.613425e+000, 9.344968e-001, -6.009826e+000, 3.798314e-001, -1.519908e+001, 4.726798e+000, -1.547451e+001, -1.968088e+000,
7.215598e-001, -4.302453e+000, -2.745361e+000, 4.732466e+000, -4.949438e+000, 2.552071e+000, 3.194665e+000, -7.983594e-001,
9.761750e-001, -7.802083e+000, 6.317519e+000, -9.641637e+000, -4.996132e+000, -3.962094e+000, -6.493368e+000, -
3.671389e+000, -3.267480e+000, -6.634923e-001, 5.460045e+000, 1.348005e+001, -1.225679e+001, -1.636763e+000, -
3.534492e+000, 1.358069e-001, -1.274123e+000, -2.913922e+000, -1.707744e+000, -8.449776e+000, -2.950280e+000, -
1.377343e+000, -3.753959e+000, 6.194226e-001, -1.626694e+000, -5.685100e+000, -9.544030e-001, -5.531335e+000, -
4.147054e+000, 2.620416e+000, 1.257449e+000, -3.649871e+000, 2.875248e+000, -1.900317e+000, 2.306473e+000, -
7.070232e+000, 6.034572e+000, 2.012277e-001, -2.902304e+000, 3.398266e+000, -1.697524e-001, 3.078786e+000, 3.330540e+000,
2.183654e+000, 1.081191e+001, -4.278933e+000, -4.335925e+000, -2.546921e+001, 1.828546e+001, -1.544236e+001,
1.376760e+001, 1.758994e+001, -7.166072e+000, 4.752949e+000, -7.981155e+000, -1.651035e+001, 1.244718e+001,
7.006387e+000, 2.085552e+001, 3.095870e+000, 9.648983e+000, -1.348675e+001, 5.023055e+000, 1.449891e+000, -2.662004e+000,
2.459569e+000, 8.396246e+000, 3.940226e+000, 6.527919e+000, -1.602118e+000, 1.028990e+001, 3.110264e-001, -1.073524e+001,

© ISO/IEC 2004 — All rights reserved


Copyright International Organization for Standardization
Provided by IHS under license with ISO
No reproduction or networking permitted without license from IHS
Not for Resale

5.195673e+000, 2.745419e+000, 1.430758e+000, 1.181607e+001, 5.631485e+000, 4.825304e-001, 4.177149e+000, 8.458590e+000, 4.771894e+000, 1.532399e-001, 6.603671e+000, -5.851439e+000, -1.016334e+001, 2.643098e+000, -1.610918e+001, 4.261411e+000, 5.792244e+000, 5.941523e+000, 6.811920e-001, 1.141325e+001, -6.009214e+000, -3.679989e-001, 5.198628e+000, 3.679718e+000, 3.700263e+000, 1.823818e+000, 4.109518e+000, 2.674175e+000, -6.945723e+000, -3.055286e+000, -2.720699e+000, -2.302180e+000, -4.799650e-001, -3.687573e+000, -8.121828e-001, 1.527808e+000, -3.053188e+000, 7.886107e+000, -1.248917e+000, -4.504109e+000, 5.887146e+000, 2.999552e+000, 1.687825e+000, -8.030657e+000, -4.385599e+000, -1.311156e-002, 1.637271e+000, 2.654241e-002, 6.254162e+000, 2.684193e+000, 1.292353e+000, 3.083564e+000, 9.919818e-002, 2.751609e+000, -5.930278e-001, 1.880532e+000, 1.295748e+001, -1.606683e+001, 4.553096e+000, -6.655838e+000, -5.810672e+000, 1.215148e+001, 1.373789e+000, 1.568989e+001, 1.252548e+000, 2.769205e+000, 1.104912e+001, 7.283353e+000, 1.198300e+000, 2.234579e+000, -3.386403e-001, 8.714829e+000, -1.474608e+000, -3.881184e+000, -1.981340e+000, 2.500853e+000, -2.113773e+000, -3.567911e+000, -1.280591e+000, -1.394531e+000, 1.179842e+000, -3.709052e+000, -2.346993e+000, -8.220206e+000, 2.435067e+000, -7.021120e+000, 5.148618e+000, -4.591978e+000, 6.146960e-001, 1.425872e-001, -4.353130e+000, 3.580971e+000, -1.655693e+000, -2.152764e+000, 6.471886e-001, 1.580447e-001, 2.949949e+000, 4.174927e+000, 2.504014e+000, 6.941038e+000, -5.446737e-001, -3.189771e+000, 3.161125e+000, -6.567375e+000, 1.185609e+000, 2.809675e-001, 6.922855e+000, -3.573474e+000, -5.023577e-002, 5.312299e+000, -3.849491e+000, -4.800996e+000, -5.520810e-001, 4.492815e+000, -2.845961e+000, -5.972140e+000, -6.655440e+000, 1.571712e-001, 3.006167e+000, -5.569638e+000, 1.261844e+000, 3.669332e+000, 7.853638e-001, 1.835331e+000, -7.171985e+000, 2.622122e+000, 3.008741e+000, -1.906858e+000, 4.837900e+000, 1.902579e-001, 1.801445e+000, 7.441546e-001, -3.046553e+000, 1.397632e+000, 4.464632e+000, -4.258287e+000, 1.898219e+000, 8.052924e-002, -1.424869e+000, 4.322477e+000, 2.424758e+000, -5.298542e+000, -1.957232e+000, -3.862170e+000, -4.279385e-001, -9.637793e-001, -2.445329e+000, 3.625229e+000, -4.023106e+000, 1.124776e+000, 5.046154e+000, -6.305702e+000, -3.583997e+000, -1.116837e+000, -5.571172e+000, 2.810138e+000, -3.624180e+000, -2.874456e+000, -3.621319e+000, -8.101627e+000, 8.826479e-001, -6.081121e+000, -3.206366e+000, -7.179372e-001, 6.741732e+000, 4.506297e+000, 5.496478e-001, 5.872864e+000, 1.179344e+000, 7.790940e-001, -2.731624e+000, -2.213215e+000, -5.478940e+000, 1.428095e+000},
{-1.214211e+001, 1.095768e+001, -5.770770e+000, 2.777533e+000, 6.477625e+000, -8.951304e+000, -8.879837e+000, 7.149179e+000, -1.068442e+000, -1.655227e+001, 2.117042e+001, -5.265641e+000, -2.030997e+000, 3.282173e+000, 5.121708e+000, 1.406431e+001, 1.474911e+000, -9.745653e+000, 4.314154e+000, 3.104986e+000, 5.123464e+000, -1.894785e+000, -4.381687e-001, 1.632426e+000, -8.564069e+000, -2.840382e+000, -9.494556e+000, 9.244865e+000, 4.379062e+000, -1.011301e+001, -1.454000e+000, 7.665417e-001, -3.411510e+000, -4.395511e+000, -1.827671e+000, -2.701940e+000, 2.920122e+000, 2.087792e-001, -3.213663e+000, -1.366800e+001, -8.508249e+000, 1.537795e+000, -6.955809e+000, -2.053051e+000, -5.970142e+000, -6.263978e+000, 3.534873e+000, 1.285425e+001, -9.028982e+000, -8.496567e+000, 7.601827e-001, 8.901939e+000, -1.950908e+000, -6.694300e+000, 2.597270e+000, 3.018318e+000, -4.165101e+000, -1.860914e+001, -5.943666e+000, 3.323469e+000, -4.276364e+000, -2.763955e+000, 8.640380e-001, -4.016767e+000, -8.345021e+000, 7.658477e-001, 7.407670e-001, 7.545792e+000, 3.662849e+000, -2.778660e+000, -4.729785e+000, -5.419922e+000, -1.220675e+000, 1.817391e+001, -1.630487e+001, 2.477821e+000, -2.223590e+001, 5.266068e+000, -1.243721e+001, 4.536820e+000, 2.538971e+001, 5.051090e+001, -1.403907e+001, 9.851047e-001, -2.314618e+001, -1.849373e+001, 4.881085e+000, -2.470775e+001, 1.042740e+001, -3.555029e+000, 2.126924e+001, -2.108426e+001, 1.394420e+000, 1.102471e+001, -5.639324e+000, -4.210664e-001, 2.164019e+000, 3.705103e+000, 6.269455e+000, 1.163741e+001, -2.014897e+000, -3.701788e+000, -2.854593e+000, 2.533579e+000, 2.411031e+000, -1.553441e+000, -1.181321e+001, 4.490075e+000, -4.876400e+000, -5.264175e+000, -7.669093e+000, 7.351225e+000, 1.137991e+001, 3.205935e+000, 5.907789e-001, -5.619735e+000, -4.696299e+000, 5.071882e+000, 2.483265e-001, -4.830973e+000, -3.414542e+000, -1.624932e+000, -2.096996e+000, -2.095591e+000, 1.553104e+000, 2.706061e+000, 2.354051e-001, -5.607405e+000, -1.005022e+000, -5.968389e+000, -2.848496e+000, -8.392262e-001, 5.432061e+000, -5.731465e-001, -7.595072e+000, 6.995123e-001, -3.900745e-001, -4.916289e+000, -1.424192e+000, 1.221607e-001, -3.972088e+000, 4.571428e+000, 8.264332e-001, 5.885640e+000, 3.046066e+000, -3.347326e+000, -1.654804e+000, 2.177847e+000, 5.203511e+000, -5.291145e+000, -8.855769e+000, 1.959752e+001, -5.950733e+000, 1.539264e+001, -4.622409e-002, -4.670818e+000, 5.506871e+000, -1.426704e+001, -1.187333e+001, 1.550857e+001, 7.634278e+000, 1.311932e+001, 1.410093e+001, 5.468252e+000, -1.130862e+001, 1.459681e+001, 3.213432e+000, 1.232536e+000, -3.816899e+000, -1.489501e+001, -2.556542e+000, 1.594577e-001, 1.042767e+001, 2.065797e+000, 1.877345e+000, 1.972139e+000, 9.730716e+000, 5.515158e+000, -5.825469e+000, -6.121630e+000, 3.579473e+000, 6.956865e-001, 2.073425e+000, -1.332832e+000, 3.994724e-001,


© ISO/IEC 2004 — All rights reserved

Copyright International Organization for Standardization
Provided by IHS under license with ISO
No reproduction or networking permitted without license from IHS
Not for Resale

-1.401644e+001, -4.684020e+000, -4.525579e+000, -5.023026e-001, -2.327805e+000, -1.580412e+000, 1.968410e+000, -2.802934e+000, -1.833234e+001, -1.301384e+001, -3.830449e-001, 5.551487e+000, 1.714004e+000, -8.570802e-001, -4.916975e+000, -4.796507e+000, 9.181506e+000, 2.192895e+000, 2.949307e+000, 4.620569e+000, -6.577697e+000, -5.342422e+000, -1.658513e+001, -1.006293e+000, 5.512836e+000, -1.069670e+001, -6.598352e+000, -7.094140e+000, -9.242453e+000, -8.011273e+000, -2.245422e+000, 1.051073e+001, -2.672340e+000, -5.578290e+000, 1.229752e+001, -4.152678e+000, 1.820905e+001, -5.880578e+000, 1.336139e+000, -4.561455e+000, -1.819856e+000, 9.736294e+000, -4.845768e-001, -3.805144e+000, -1.516347e+000, 1.875158e+000, -3.949533e+000, -1.655267e-001, 7.502629e+000, 1.540648e-002, 2.077170e-001, 1.229693e+001, 3.164414e+000, -3.760546e+000, -4.095171e+000, -4.207551e+000, -9.133974e+000, 1.160657e+001, -6.091967e+000, -1.026340e+000, 6.010736e+000, 8.316058e+000, -8.682280e-001, -5.944787e+000, 2.260409e+000, -9.653949e+000, -6.844604e+000, 6.755419e-001, 6.463159e+000, 4.165183e+000, -1.036755e+001, 1.265193e+000, 1.094075e+000, -1.771489e+000, -7.892391e+000, -1.128852e+001, -3.116333e+000, 4.310912e+000, -6.615868e-001, -3.894275e+000, -2.583254e+000, -8.417521e+000, 8.934899e-001, -2.051347e+000, -5.711938e+000, -1.520055e+001, -3.161580e+000, 8.425447e+000, 1.414510e+001, 1.458647e+001, 5.098842e+000, 5.914298e-001, 2.279975e+000, -9.302689e+000, -5.454191e+000, 8.569953e+000, 6.770682e+000, -1.348436e+001, -1.310263e+001, 5.045119e+000, 5.770053e+000, 6.975666e-001, 8.227340e+000, 7.596462e+000, -1.954706e+000, 1.904841e+000, -8.177793e+000, 5.284264e-001, 5.463714e+000, 5.407262e+000, -6.257217e+000, -1.358705e+000, 3.098860e+000, -2.352027e+000, -2.636612e+000, -6.206416e+000, 5.807999e+000, -4.969264e+000, 4.667692e+000, -8.119049e+000, -6.669144e+000, -3.106773e+000, -4.490368e+000, 5.734590e+000, 2.002432e+000, -2.027087e+001, 5.145847e+000, 8.184949e+000, -5.494488e+000, -3.952845e+000, 7.154563e-001, -1.385569e+001, 6.642517e+000, 4.074642e-002, 3.052036e+000, -5.983297e+000, -9.493773e+000, -6.158707e+000, -1.891162e+000, -1.895680e-001, 7.842939e+000, 1.346866e+000, 1.971249e-001, 7.313270e+000, -1.233906e+001, -8.157976e+000, 4.302837e+000, 1.492948e+000, -1.428712e-003, 1.583215e+000, -9.007096e-001, -4.753515e+000, -1.198903e+000, -9.056710e+000, -1.311358e+000, 5.734358e+000, 9.210231e+000, 4.296341e+000, -4.236604e+000, 2.781742e-001, -3.397556e+000, -1.960118e-002, 2.442302e+000, -5.226620e+000, -1.004352e+000},

{-8.425880e+000, -1.158633e+001, 1.612314e+001, -7.009254e+000, 3.673300e+000, 8.651049e+000, -5.878778e-001, 9.144360e-001, 2.474238e-001, 1.238928e+000, 2.324141e+000, -2.535357e+001, -1.735752e+001, -2.863559e+000, 1.575526e+001, -6.471165e+000, -1.904014e+001, -2.324783e+000, 6.191071e-001, -1.765828e+000, -1.170450e+000, 5.435198e+000, 8.661533e-001, -4.975995e-002, -5.984740e+000, -3.264370e+000, -3.225847e+000, 7.160889e+000, -1.878560e+000, 5.171414e-001, 1.307393e-001, -5.768729e+000, -5.413703e+000, 9.274878e-002, 9.072655e+000, 1.924568e+000, 1.113964e+000, -1.137729e+001, -4.586327e+000, -4.384644e+000, 2.148903e+000, -3.775876e+000, -6.360852e+000, -3.084596e+000, 2.068110e+000, 9.651305e+000, 1.081553e+001, -3.290489e+000, -2.063556e+000, -1.097880e+001, 1.432450e+000, -7.829222e-001, 6.717265e+000, 3.501053e+000, 5.075809e+000, -5.398754e+000, 5.822109e+000, -1.928392e+000, -3.341245e+000, -5.407211e+000, -8.909339e+000, 2.519471e+000, -7.775622e+000, 7.316389e+000, 5.601767e+000, 2.492917e+000, 6.234554e+000, -2.496119e+000, -3.425814e+000, 3.573681e+000, 7.603868e+000, -3.795579e+000, 5.882662e+000, 3.767164e+000, -7.256778e+000, -2.335366e+001, 1.708704e+001, 2.196153e+000, 5.580540e+000, -1.529109e+001, -2.318934e+001, 7.418237e+000, 1.561195e+000, 1.633136e+000, -2.098226e+001, 2.480851e+000, 3.179777e+001, 5.005071e+001, 1.147818e+001, 6.710489e+000, 1.923261e+000, -1.097433e+001, 2.366744e+001, 1.071317e+001, 6.646404e+000, -1.000475e+000, 1.028650e-001, -1.176822e+001, 2.736651e+000, 5.123253e+000, 6.120753e+000, 1.456834e+000, -1.640554e+000, 3.893531e-001, 6.716688e+000, 3.305211e+000, 4.004588e+000, -5.571145e+000, 5.420814e+000, 1.026332e+000, -3.662952e+000, -1.062340e+001, 1.889292e+000, 1.474772e+000, 3.224291e+000, -1.674920e+000, 3.316529e+000, 8.876465e+000, 2.749732e+000, 8.526832e+000, 5.727129e-001, -5.487465e+000, -1.317623e+001, -4.753327e+000, 3.233289e+000, 5.645618e+000, -1.005049e+001, -2.553186e+000, 2.892880e+000, 4.201007e+000, -3.550054e+000, 5.157505e+000, -2.709745e+000, 3.171070e-001, -8.734808e-002, 2.320318e+000, 6.909712e+000, 6.639525e+000, -1.223119e+000, 1.038387e+000, 4.833992e+000, -2.352359e+000, 1.113986e+000, -1.503412e+000, 5.357388e-003, 5.599072e+000, -1.740375e+000, -9.127114e-001, 4.896622e+000, -2.440586e-001, 4.281154e+000, -1.678093e+001, -6.868757e+000, 1.081376e+001, 1.412350e+000, -3.021681e+000, 3.621811e+000, 2.039478e+000, -7.273363e+000, -1.047695e+001, 1.491256e+001, -8.794361e+000, -2.339137e+000, 7.818373e-001, 3.084457e+000, -8.958194e-001, 3.159670e+000, -1.062423e+001, -6.334953e+000, 2.066751e-001, -1.753072e+001, -1.048026e+001, 5.735935e-001, 4.298782e+000, -8.380062e+000, -8.570727e-001, -3.161651e+000, 4.671317e-001, 8.071877e+000, -4.108986e+000, -8.258614e+000, 5.767520e+000, 4.811344e+000, -9.947598e+000, -3.116907e+000, 1.801385e+000, -5.395381e+000, 1.208886e+001,

© ISO/IEC 2004 — All rights reserved


Copyright International Organization for Standardization
Provided by IHS under license with ISO
No reproduction or networking permitted without license from IHS
Not for Resale

1.066088e+001, 4.340181e+000, -6.916332e+000, -3.173793e+000, 3.394460e+000, 4.475647e+000, 8.426144e+000, 6.201340e+000, -6.147370e-001, 1.703116e+000, -6.000326e+000, 1.066445e+001, 3.717649e-001, -1.050896e+000, -7.538735e-001, -1.159046e+000, 2.346877e+000, -6.153132e+000, -9.972203e+000, 3.894933e+000, 1.796082e+001, 1.102897e+000, 8.873055e+000, -3.729331e+000, -3.754270e+000, 1.520268e+000, 2.531326e+000, -7.694781e+000, 4.051833e+000, -4.186207e+000, -3.146553e+000, 4.160764e+000, -2.806853e+000, 4.853017e+000, -2.249119e+000, -3.677553e-001, -1.132914e+001, 5.195870e-001, -1.356007e+001, 2.951598e+000, 5.868745e+000, 1.300237e-001, 2.316437e+000, 1.366851e+000, -1.307125e+000, -3.422956e+000, -6.739420e+000, 9.884348e+000, -5.508980e+000, -8.214538e+000, -1.853901e+000, 4.407549e-001, -4.409430e+000, 3.373539e+000, 6.528777e-001, -6.683709e+000, -1.719648e+000, -9.625693e+000, -6.276129e+000, 6.167853e+000, -6.931310e+000, 8.015756e-002, -7.183556e+000, 5.748674e+000, 2.224145e-001, -8.631123e-001, -5.767637e+000, -8.687440e+000, 7.868269e+000, 4.519306e+000, 9.894590e+000, 8.810950e-001, -1.229825e-002, 1.214847e+000, 1.499618e+001, -9.737529e-001, -4.499012e+000, 2.777133e+000, -4.679439e+000, -5.334828e+000, -2.634280e+000, 3.211626e+000, 1.555655e+001, 5.824132e+000, -1.178027e+001, 1.165726e+000, -5.005377e+000, -4.704293e+000, -4.083514e+000, -5.447979e+000, -3.370427e+000, -1.433705e+000, 5.665435e+000, 1.108773e+000, -7.283428e-001, -2.812873e+000, -2.578895e+000, 8.534123e+000, -6.812894e+000, -5.872527e+000, 4.951989e+000, 4.787594e+000, -6.228281e+000, 7.940247e+000, -9.912252e+000, -2.437684e+000, -2.725956e+000, -4.992003e+000, -3.079331e+000, -8.490506e+000, 2.166965e+000, 8.234502e-001, 9.490359e+000, -5.466197e+000, 3.279366e+000, 3.641944e+000, -5.642488e+000, -4.720709e+000, 3.559661e+000, 1.515135e+000, 1.194805e-001, 1.364597e+000, 7.673216e+000, -1.699195e+000, -2.604990e+000, 5.619578e+000, 7.188265e+000, 5.570777e+000, 7.629395e-001, -9.289606e+000, 8.384279e+000, -5.761383e+000, -7.460996e-001, -1.271045e+001, -8.026694e-001, -8.061807e+000, 6.473323e+000, 1.982411e+000, 1.035177e+000, -2.520924e+000, -1.969391e-002, 3.429444e+000, 1.042724e+001, 9.249446e+000, -6.076264e+000, 3.346198e-001, -8.245051e+000, 2.792813e+000, -8.404501e+000, 2.096013e+000, -2.391321e+000, 3.193394e+000, -3.513409e+000, 8.895373e-001, -4.883605e+000, -3.894319e+000, 5.465238e+000, 3.133317e+000, -6.519178e+000, 9.883825e-001, 3.364395e-001, -9.083063e-001},
{-6.247090e+000, 1.636387e+001, -2.268469e+001, -1.565795e+001, 7.848680e+000, 6.387363e+000, 5.783789e+000, -2.464282e+001, 5.351000e+000, -2.015854e+001, -7.936449e-001, 3.327474e+000, -7.391559e+000, 1.196676e+001, 1.255228e+001, -1.850192e+000, 1.101980e-001, -1.563683e+001, 3.249655e+000, -4.951345e+000, 1.645896e+001, -9.975511e+000, 1.055945e+001, 1.127103e+001, -7.568447e-001, -7.109402e+000, 3.838410e+000, 2.138327e-002, 7.739102e+000, -8.266733e+000, 1.096657e+001, 3.124027e-001, -5.097477e+000, -1.994713e+000, 1.478753e+000, 5.745803e+000, -2.039820e+000, 9.565065e+000, 9.133539e+000, 3.158017e-001, -7.455874e+000, -1.059286e+001, 1.252066e+001, -5.476859e+000, -3.476123e+000, 7.450171e+000, -5.887305e+000, -5.459470e-001, -6.362063e+000, 2.329368e+000, -3.164885e+000, -5.137227e+000, 4.638453e-001, -4.344790e+000, -1.149309e+001, 7.183438e+000, -2.785395e+000, 2.243110e+000, 5.548882e+000, -8.366567e+000, 2.939639e+000, 5.399882e-002, 2.095528e+000, 4.717904e+000, 5.777822e-002, -1.089023e-003, -2.283064e+000, -1.608764e+001, 4.759902e+000, 3.624793e+000, -7.410494e+000, 6.370103e+000, -1.312458e+001, -4.462914e+000, 5.126365e+000, 1.218278e+001, 1.258687e+001, 9.754936e+000, 2.152528e+001, 1.833560e+001, -1.293061e+001, 3.099618e+001, 2.812584e+001, -5.551838e+000, 2.787779e+001, 1.338796e+001, -3.125296e+001, 9.462670e+000, -2.887540e+001, 1.188441e+001, 6.944359e+000, -1.374426e+001, 7.722502e+000, 1.222372e+001, -3.874516e+000, -5.843081e+000, -1.102968e+001, 5.188026e-001, -8.315510e+000, -3.104613e+000, 1.634373e+000, -9.589922e+000, 8.884468e+000, -4.643158e+000, -2.771989e+000, 4.469944e+000, -2.733251e+000, -6.280079e+000, -8.859831e+000, -6.793139e-001, -1.065066e+001, -1.123076e+001, 7.038518e+000, -1.049283e+001, 3.615764e+000, -1.159084e+001, 1.407788e-001, 4.000225e+000, -8.774530e-001, 3.436136e+000, -5.930508e+000, -9.843429e-001, -1.194753e+001, -1.305726e+000, -4.318173e+000, -1.474453e+000, -9.699991e-001, -1.642771e-002, 7.221278e-001, -6.531530e+000, 1.004419e+000, -1.594490e+000, 4.110843e-001, -2.953108e+000, 3.299213e+000, 1.747611e+000, 1.289724e+000, 4.239341e+000, 3.915224e-001, 1.960994e+000, -2.099222e+000, 6.254444e+000, -1.794842e+000, 1.866220e+000, 4.096054e+000, 8.113350e+000, -3.195572e+000, -8.890545e-001, 4.712562e+000, 7.065018e+000, -4.273714e+000, 8.260611e+000, 4.903715e-001, 1.884835e+001, -8.342845e+000, 8.948765e+000, 1.183245e+001, 8.266892e+000, 7.179845e+000, 1.651018e+000, 2.481269e+001, -8.273108e-001, 1.000419e+001, 1.356010e+001, -9.396845e+000, -1.783236e-001, 1.100620e+001, 1.345528e+001, -1.672128e+001, 6.817882e+000, -4.476349e+000, 1.060437e+001, -3.102033e+000, -2.930161e+000, -6.834659e+000, 1.497427e+000, -4.795085e-001, 2.421379e+000, -7.759670e-001, -1.580241e+000, 7.665910e-001, -6.984404e+000, 5.401496e+000, 6.267734e+000, -6.910723e+000, 1.327153e+001, -7.136348e+000, 7.013621e+000, 1.313905e+000, 5.040289e+000, 3.070541e+000, -4.908369e+000, 1.042031e+001, -1.701803e+000, 1.418132e+000, -7.555703e+000, -9.318129e+000, -


© ISO/IEC 2004 — All rights reserved

Copyright International Organization for Standardization
Provided by IHS under license with ISO
No reproduction or networking permitted without license from IHS
Not for Resale

1.315055e+000, -7.596038e-001, 2.039978e+000, 1.064905e+000, 8.507708e-001, 6.120530e+000, 2.422864e+000, 9.245310e-001, -6.286895e+000, -2.740949e+000, 5.546340e-001, 1.135215e+001, -1.983224e+001, -2.338008e+000, -1.103754e+000, 1.136195e+001, 5.658607e+000, 2.789249e+000, -7.057782e+000, -5.716233e+000, -1.012312e+001, 6.722192e+000, -5.687674e+000, -9.124763e+000, -1.339948e+000, 1.045240e+001, -5.654999e+000, 4.169694e+000, -5.558678e-001, 3.640307e+000, 5.375214e+000, -1.071234e+001, 4.203411e-001, 3.235254e+000, -3.281158e+000, 4.962954e-001, -1.368685e+001, 5.312297e+000, 4.048445e+000, -1.487448e+001, -8.666099e+000, 3.880570e+000, 1.007618e+001, -6.276353e+000, 9.202613e+000, 1.754988e+000, -7.409885e+000, 1.085194e+001, -1.349117e+001, -3.023136e+000, 3.295840e+000, -4.119376e+000, -3.202084e+000, 6.537564e-001, -1.555717e+000, -1.776115e-001, -2.138294e+000, 6.654253e+000, 2.729843e+000, -6.600526e+000, -8.066901e+000, 1.038236e+001, -9.035693e+000, 1.529588e+000, -1.320438e+001, 1.728636e+000, 4.363492e+000, -1.749532e-002, 4.138127e+000, 1.781724e+000, 4.747194e-002, -1.163152e-001, -5.474104e+000, -2.084817e+001, -9.088638e+000, -3.213021e+000, -2.846708e+000, 3.286858e+000, -6.093279e+000, 5.527748e+000, -5.611442e+000, -2.258763e+000, -3.178947e+000, 9.868470e-001, 3.630872e+000, -1.525606e-001, 6.350782e-001, 3.399277e+000, -4.624559e+000, 1.604264e+000, -6.225051e+000, -9.949271e-001, 3.186710e+000, -8.100768e+000, -2.637878e+000, 3.948230e-001, -3.016652e+000, -3.502256e+000, -5.439903e+000, -3.657107e+000, 3.852790e-001, 4.067925e+000, 1.216956e+000, -6.596350e+000, -1.654213e+000, -2.958460e+000, 4.469406e+000, -2.084306e+000, -8.795764e-001, -3.280250e+000, -5.999024e+000, 9.630058e-001, -1.500814e-001, -5.242454e+000, 4.474700e+000, -8.899295e+000, -1.818551e+000, 3.643605e-001, -4.607125e+000, 3.192594e+000, -2.105058e+000, 1.999185e+000, 3.793871e-001, -6.329692e-001, 2.239200e+000, 3.135739e+000, 8.075108e+000, 4.627441e-001, -5.836820e-001, 5.080917e-001, -2.047347e+000, 1.516417e+000, 2.588580e-001, -6.287435e+000, -3.532923e+000, -3.110151e+000, -2.699634e+000, 7.333552e+000, -2.561563e+000, -1.127715e+001, 2.485677e+000, -5.632106e+000, 5.859990e+000, 1.413682e+000, -3.388735e+000, 9.504285e+000, 2.036645e+000, -3.796442e+000, 3.379000e-001, 5.413446e+000, 2.166015e+000, -4.545031e+000, -8.139773e+000},
{1.277564e+001, 9.602832e+000, 8.585198e+000, -9.009439e+000, 1.310641e+001, 9.497036e+000, -1.412047e+001, -1.268997e+001, 3.605784e+000, -1.283799e+001, -9.732815e+000, -7.247314e+000, -3.577480e+000, 9.090560e+000, 8.472089e+000, 3.979600e+000, -6.338476e+000, -3.517228e+000, 7.570261e+000, 1.688947e+001, 3.044023e+001, -1.526609e+000, 4.364996e+000, 1.250063e+000, 4.445050e+000, -6.469746e+000, -4.280358e+000, 1.370577e+000, 4.025148e+000, -5.864958e+000, -5.126253e+000, 6.031012e+000, -6.932120e+000, 6.787329e+000, -4.265429e+000, -7.508922e+000, 2.184607e+000, -1.132264e+001, -1.305962e+001, -8.687857e+000, 7.447044e+000, -6.941342e+000, 7.443059e-001, 3.570356e-001, -1.252696e+000, -2.310966e+000, 5.825348e+000, -6.455287e+000, 9.920715e+000, 4.110869e+000, 3.030603e+000, 5.095878e+000, -1.849838e+000, -5.267522e+000, 4.679343e+000, 7.612080e+000, 4.018551e+000, -5.288766e+000, -4.615120e+000, 7.610652e+000, 4.936074e-001, -4.076703e-001, 1.384086e+001, -3.117233e+000, -7.093708e-002, 6.084648e+000, -4.035821e+000, -3.938696e+000, -3.516051e+000, -3.657135e-002, 4.308464e+000, 4.712091e+000, -7.216260e+000, 1.469739e+001, -6.714755e+000, -1.604511e+001, -1.760506e+001, -9.206600e+000, 1.999000e+000, 2.483649e+000, 3.147295e+001, -1.617132e+001, 8.600813e+000, 2.568116e+001, -3.085677e+001, 1.668496e+001, 1.616871e+000, 2.156990e+001, 4.085610e-001, -1.428165e+001, 3.999443e+000, -1.388426e+001, -5.917493e+000, 3.718324e+001, -5.138445e+000, 1.216603e+001, 4.949075e+000, 1.197419e+001, 1.437723e+000, 3.161322e+000, -4.203120e+000, 3.892038e+000, 1.141090e+001, -3.924984e+000, 4.910586e+000, -1.267512e+001, 1.007999e+001, -3.054366e+000, 9.355777e+000, 1.002023e+001, 3.756437e+000, -1.551530e+001, -6.327297e+000, -4.544202e+000, 6.056523e+000, -2.179463e+000, 7.330917e-001, 7.747413e+000, 2.089729e+000, -1.081006e+001, -2.808666e+000, 6.324094e+000, -6.617560e+000, 3.513193e+000, -3.497450e+000, -3.003296e+000, 2.292983e+000, 3.001680e+000, -3.289747e+000, 3.178833e+000, 3.257334e+000, -1.009109e+001, -7.847209e+000, 3.379543e+000, -1.611136e+000, 3.532443e+000, 4.242731e+000, -1.072985e+000, -4.231954e+000, -7.462365e+000, -3.061843e+000, -1.537882e+000, 4.203245e+000, -9.063384e-001, -1.951200e-001, -2.298688e+000, -3.292305e+000, -1.158047e+001, 4.984493e+000, -1.668417e+000, -8.477021e+000, -1.174389e+001, 1.680348e+000, -4.698453e+000, 2.325102e+001, 6.213289e+000, -4.804765e+000, 3.081922e+000, -1.425859e+001, 1.022184e+001, 5.794735e+000, -6.252090e+000, -8.894187e-001, -2.045470e+001, 4.545890e+000, -5.843617e+000, 2.121151e+000, 2.156151e+000, -1.637215e+001, -2.289911e+001, -1.497241e-001, -1.452497e+001, -1.472181e+001, 2.158549e+000, -1.198350e+001, 4.665686e+000, 3.270632e+000, -1.413325e+001, 3.593069e-001, -3.061151e+000, -3.682638e+000, 2.228791e+000, -7.300300e+000, 6.711626e-001, 2.922800e+000, -5.687750e+000, -1.082903e+001, -1.463069e+001, -4.633096e+000, 2.581631e+000, 8.342176e+000, -4.384769e+000, 1.134091e+000, -4.796955e+000, -2.702658e+000, -8.268470e+000, -

© ISO/IEC 2004 — All rights reserved


Copyright International Organization for Standardization
Provided by IHS under license with ISO
No reproduction or networking permitted without license from IHS
Not for Resale

4.503935e+000, -4.584198e+000, -7.165249e+000, 1.036869e+000, 7.858071e-001, -1.363213e-002, 9.106691e+000, -4.198972e+000, 7.483487e+000, 2.327459e+001, -1.960250e+000, -9.902995e-001, 4.997362e+000, 6.176698e-001, -3.500905e+000, 1.468513e+000, 7.150173e+000, 3.806121e+000, -5.302921e+000, 6.293724e+000, 8.446813e+000, 1.971442e+001, 7.677655e+000, 2.231164e+000, 2.259357e+000, 4.114106e-001, -4.438485e+000, 8.497750e+000, 3.084157e+000, -1.798592e+000, -3.051344e-001, 6.865424e+000, -2.789367e+000, -2.518001e+000, -1.119503e+001, -6.296525e+000, 3.396603e+000, 8.974544e+000, -2.131179e-001, -9.178057e+000, 2.644581e-001, 5.108352e+000, 9.684649e+000, 9.432274e+000, 1.111134e+001, 1.631638e+000, -7.383399e+000, -6.284996e+000, 2.220055e+000, 3.501036e+000, 2.295048e+000, 3.831622e+000, -1.886327e+000, 7.570955e-001, -8.430925e+000, -1.075115e+001, -1.766544e-001, -1.146824e+000, -1.069849e+001, -4.209066e+000, 5.313443e+000, 8.234927e-002, -3.991012e+000, 4.384364e+000, 9.818924e+000, 5.353851e+000, -2.034004e+000, -5.606723e+000, -4.974020e+000, 1.036153e-002, -3.340547e+000, -1.808938e+000, -4.012013e+000, 2.682323e+000, -6.374538e+000, -5.827886e+000, -1.806306e+000, 7.484777e+000, -7.985392e+000, -3.135999e+000, 3.301395e+000, 5.694870e+000, 2.310093e-001, -4.013102e+000, 1.800800e+001, -7.257969e-001, 1.906364e-001, 1.511925e+000, 1.716223e+000, -3.142666e+000, -6.964769e-001, -2.212709e+000, -2.063534e+000, -1.734893e+000, 1.864655e+000, 5.864897e+000, -1.196495e-001, 5.277819e+000, 8.033702e+000, -4.193076e-002, -1.222912e+001, 3.477266e+000, -1.757321e+000, 5.360631e+000, -2.562984e+000, -1.077966e+000, -5.273318e+000, -4.218864e+000, 1.554773e+000, 9.170174e-002, -3.690274e-001, -1.129121e+000, 3.550080e-001, -3.470091e+000, 2.640807e+000, 7.952211e+000, -4.770527e-001, -1.310977e+000, 6.847683e+000, -5.150479e+000, 6.532616e+000, 6.122146e+000, 1.606909e+000, 5.652103e-001, 5.788178e+000, 1.201265e+001, -5.677531e-001, -5.415223e-001, -7.158047e-001, 8.477233e+000, -4.258221e+000, -2.195577e+000, 5.244880e+000, 2.983583e+000, -5.030942e+000, 8.861546e+000, 6.044357e+000, -2.294934e+000, 5.830109e+000, -3.366041e+000, 5.715761e+000, -1.435011e+000, -6.734002e+000, 3.740064e+000, 7.200648e+000, -2.624693e+000, -2.581196e+000, -1.993566e-001, 8.786929e-001, 7.647452e-001, 5.913907e+000, -4.324639e+000, -1.870662e+000, -1.508631e+000},
{-3.192744e+001, 1.173243e+001, -1.691370e+001, -3.780439e+000, -1.222110e+000, -1.494853e+001, 1.326998e+001, -1.567776e+001, -1.330841e+001, 1.020998e+001, 1.491907e+001, 1.693932e+001, 1.496877e+001, -2.314486e+000, 6.517664e+000, 1.327338e+000, -1.958496e+001, 3.755137e+000, 6.791259e+000, 1.404283e+000, -8.290607e+000, 1.064903e+000, 3.685589e+000, -8.535529e+000, -1.987285e+001, -6.024867e-001, -3.401225e+000, -8.396069e-001, 1.643280e+000, 3.910804e+000, 8.646173e+000, 1.176056e+001, -6.626347e+000, 6.213529e+000, 2.709104e+000, 2.429504e+000, 6.871853e+000, 1.570311e+001, -7.089002e+000, -2.482783e+000, 7.051297e+000, -8.558661e+000, -1.195556e+001, -7.587238e-001, -1.565850e+000, -9.261055e+000, 6.670570e+000, -6.397396e+000, -5.091797e+000, -1.023991e+001, -3.599758e+000, -4.416631e+000, -2.371073e-001, 1.444730e+000, -5.688681e+000, 2.526729e+000, 1.512951e+001, 5.676264e+000, -4.429023e+000, -7.100698e+000, -1.243102e+000, 9.396720e+000, -8.147304e+000, 1.171063e+001, 6.040913e+000, -5.043470e+000, 8.876346e+000, -1.216062e+000, 1.133430e+001, 3.907370e+000, 1.270569e+000, 9.912743e+000, 8.180282e+000, 1.476470e+001, -1.645704e+000, 3.220979e+000, 1.835779e+000, 2.359569e+001, 7.510047e+000, 8.242369e+000, 2.553695e+001, 9.863381e+000, -1.699867e+001, -1.856445e+001, -1.618779e+001, -3.705973e+001, 1.427570e+000, 3.638051e+000, -9.978681e+000, -1.665662e+001, -1.958426e+001, 6.514040e+000, 7.941701e+000, -1.500209e+001, -7.348628e-001, 1.622517e+001, 2.592355e+001, 6.076172e+000, -1.671645e+001, -6.757698e+000, 8.416221e+000, 1.333918e+001, 4.219611e+000, -1.308735e+001, -6.683260e+000, -3.557756e+000, 3.407488e+001, 7.706186e+000, -2.809968e+000, -4.648313e+000, -6.840921e+000, 4.154236e+000, 2.359285e+000, 8.917088e-001, 3.442272e+000, 4.671529e+000, -3.161622e+000, 1.780913e+000, 1.020242e+000, -4.741262e+000, -1.379903e-002, 4.878459e-001, -9.234760e-001, 1.237638e+001, 1.041579e+000, -1.210773e+001, -1.196065e+001, 1.432351e+000, 1.007041e+001, 2.110860e+000, -4.802073e+000, 8.559685e+000, 9.059012e-001, -5.726286e+000, 3.899465e-001, -3.103283e+000, 4.373579e+000, 5.746966e+000, -2.843595e+000, 5.172079e+000, 7.948615e+000, 1.797565e+000, -1.326313e+000, 5.080967e+000, 6.525124e+000, 2.131267e+000, -4.655694e+000, -9.186306e+000, 4.955711e-002, -3.628073e+000, 4.206766e+001, -7.761572e+000, -2.417150e+000, 1.443898e+001, -1.546730e+001, -1.896645e+000, 1.641363e+001, 5.272545e-001, -2.164104e+001, 2.026507e+001, 1.201088e+001, -2.023221e+000, -6.173673e+000, -9.342686e+000, 2.864352e+001, 9.391774e+000, -2.345627e+000, 1.428394e+000, 8.291303e+000, -5.553154e+000, -1.140220e+001, -3.390184e+000, 7.616040e+000, -8.252109e-001, 5.249064e+000, -8.069979e+000, 6.114097e+000, -4.163971e+000, -9.121781e+000, 1.686084e+000, 1.005928e+001, 4.487024e+000, 1.411304e+001, -1.293326e+001, 2.702573e+000, 6.892633e+000, 1.263687e+000, 3.085547e+000, -3.120596e+000, -7.357438e+000, -1.537588e+000, -2.850844e-002, -1.838719e+001, 1.262169e+000, -2.806663e+000, 5.841794e+000, -6.954958e+000, -2.372602e+000, -7.649246e+000, 7.341031e+000, 4.053641e+000, 1.250993e+001, -2.416149e+000, -5.477433e+000, 8.661388e+000, 1.829632e+001, -5.705653e+000, -5.601304e+000, -


© ISO/IEC 2004 — All rights reserved

Copyright International Organization for Standardization
Provided by IHS under license with ISO
No reproduction or networking permitted without license from IHS
Not for Resale

4.830903e+000, -6.787606e+000, -5.503112e-001, -2.400737e+000, -3.947349e+000, 1.138190e+001, -2.128827e+000, -5.677300e+000, 6.852881e+000, -1.862535e+000, -5.915009e+000, -3.438248e+000, -3.050298e+000, 1.149993e+001, 4.032979e+000, -6.679740e+000, 2.810570e+000, -5.118517e+000, 2.088922e+000, 1.599663e+000, 3.789272e+000, -2.826849e+000, -7.349437e+000, 1.546721e+001, 5.207187e+000, 4.692885e+000, 2.328796e-001, 9.940026e+000, -1.008179e+001, 4.856166e+000, 8.042022e+000, -2.820956e+000, -3.817411e+000, 1.170147e+001, -8.667778e+000, 4.264351e+000, 1.031105e+000, -2.590355e+000, 1.862870e+000, -1.122528e+000, 7.486367e+000, -1.085399e+000, -3.762678e+000, 9.375160e+000, -1.834262e+000, -2.979744e+000, -5.107916e+000, -2.982271e+000, 1.378879e+001, 7.741732e+000, -5.941703e+000, -7.177725e+000, 2.075477e+000, -8.847983e+000, 8.527142e+000, -3.643984e+000, -1.689531e+000, -1.281473e+000, -3.190370e+000, 6.347822e+000, -3.216872e+000, -1.548929e+000, 3.429933e+000, -2.897936e+000, 3.280306e-001, 9.766107e+000, 7.349804e+000, 1.796104e+000, 2.720270e+001, -8.658464e+000, 3.983701e-001, -5.718008e+000, -4.917315e+000, 1.090836e+001, -5.301607e+000, 7.840710e+000, -1.219620e+000, -2.504798e+000, 2.340629e+000, -2.135387e+000, -2.861729e-001, 1.660779e+000, 1.195791e+001, -3.424380e-001, -9.737345e+000, -2.399446e-001, -2.822088e+000, -1.082169e+000, 6.197214e+000, -6.296475e+000, -7.769653e-001, 4.624479e+000, 2.522008e+000, -3.929391e+000, -3.402050e-001, 3.370072e+000, -5.835443e+000, 5.547391e-001, 7.014259e+000, 6.996333e-001, -4.710699e+000, -2.831503e+000, -1.182259e+001, 3.265552e+000, -1.127584e+001, -8.996741e+000, 3.302723e+000, -2.680176e-002, -3.941839e+000, -3.289219e+000, -2.130227e+000, 7.799379e+000, -3.527823e+000, 4.156181e-001, 5.228302e+000, -1.056597e+001, -8.193840e+000, 7.352616e+000, -1.561883e+000, -1.855869e+000, -1.048214e+000, -1.260551e+000, 1.098575e+001, 3.822762e+000, -3.569365e+000, -9.175069e+000, -4.425286e+000, -5.206690e+000, -5.295528e+000, 3.556059e+000, -8.657413e+000, -4.079737e+000, -1.608485e+000, 3.412533e+000, 4.821513e+000, -3.595854e+000, -7.084304e+000, -9.835054e+000, 5.954151e+000, -2.238823e+000, -4.109970e+000, -1.879429e+000},
{1.189505e+001, 1.213419e+001, -2.807907e-002, 2.007012e-001, 1.633867e+001, -6.943919e+000, 1.761606e+001, -1.832404e+000, 1.090370e+001, 2.695695e+001, -1.143293e-001, -1.544185e+001, 1.216017e+000, 5.115727e+000, 3.040846e+000, 6.528247e+000, 1.815175e+001, 1.345812e+001, -4.259472e+000, 1.726205e+000, -6.976966e-001, 7.806632e+000, -1.232243e+000, 5.341355e+000, 4.456681e+000, 6.958869e+000, 1.043809e-002, -5.244983e+000, -9.211638e+000, 4.441843e+000, 1.158809e+001, 1.466116e+000, 9.750984e+000, 4.033200e+000, -3.130050e+000, 6.321495e+000, -6.641902e-001, -4.856143e+000, -1.946202e+000, 6.633894e+000, -3.892553e+000, -9.301515e+000, 1.801640e+001, 1.571598e-001, 1.265399e+001, -9.718761e-001, 5.564026e+000, -1.189815e+001, 1.329872e+001, 6.431314e+000, 1.068591e+001, -1.309676e+000, -5.180393e+000, -3.681134e+000, 2.208598e+000, 4.446261e+000, -7.896805e+000, 4.152988e+000, -1.468281e+000, 2.698377e+000, -6.545393e-001, -7.013490e+000, -5.229437e+000, -4.513209e+000, 9.473876e-001, 7.687726e+000, 2.727603e-002, -7.328850e+000, -2.741458e+000, -8.714312e+000, 8.535139e+000, -2.998917e+000, 1.365996e+001, -1.294780e+001, 1.657596e+001, 4.301980e+000, -9.075200e+000, 1.439739e+001, -3.466128e+000, 2.982000e+000, -7.826239e+000, 2.373367e+001, -1.158246e+001, -4.356807e+001, -1.125553e+001, 4.993506e+001, -2.926305e+000, 1.378990e+001, 1.478418e+001, -1.288124e+001, -8.928693e+000, 6.794246e+000, -1.363440e+001, 1.378495e+001, 8.820166e+000, -2.498586e+001, -1.627993e+001, 7.042102e+000, 3.810674e+000, -4.506878e+000, 1.580934e+001, -5.267287e-002, -3.733097e+000, -7.015226e+000, -6.055496e+000, 1.022408e+001, -4.268645e+000, 3.927497e+000, -2.105761e+001, -4.304089e+000, 5.992909e+000, 4.256240e+000, -4.119331e-001, -1.965615e+000, -1.191771e+000, 7.634106e+000, -1.143618e+000, 1.041720e+000, -7.875966e+000, 1.479066e+000, 6.915631e+000, -9.471099e-001, 4.046302e+000, -5.441386e+000, 1.423631e+000, -3.354461e+000, -1.822274e+000, 3.013918e+000, 5.074957e-001, 5.893342e+000, 1.341786e+000, -1.961731e+000, 3.726886e+000, -7.223381e+000, 4.278295e-001, 3.225923e+000, 2.015753e+000, -4.968400e+000, 2.464646e+000, -6.522409e+000, -3.032004e+000, -4.259782e+000, -9.799531e+000, 6.063759e+000, 2.069586e+000, 3.984936e-001, 1.211925e-001, -4.857306e+000, 7.065487e-001, 6.671220e+000, -3.162231e-001, 6.183775e+000, -2.440908e+001, -2.035242e+000, 9.537685e+000, 1.549637e+001, -3.368818e+000, 1.379994e+001, -1.059388e+000, 2.534417e+001, 1.063585e+001, 1.050730e+001, 1.381257e+001, 6.008238e+000, 1.692230e+001, 1.431514e+001, -4.269010e+000, -2.672551e+001, -1.507528e+001, 1.486050e+001, 3.455164e+000, 4.041369e+000, -4.131129e+000, 3.935704e+000, -6.715507e+000, -4.423095e+000, -6.380140e+000, -2.091834e+001, 4.078821e+000, 4.930719e+000, 5.631526e+000, -9.912776e+000, -5.495721e+000, -1.268080e+000, 1.559045e+001, 1.602527e+000, 2.481886e-001, -3.641104e+000, -3.825595e+000, 4.794413e+000, -2.498981e+000, 1.906369e+001, 3.543766e+000, -2.293637e+000, 1.263790e+000, -1.121332e+001, -8.641654e-001, 9.326246e+000, 2.166428e+000, 1.062979e+001, -1.232527e+001, -3.136771e+000, 5.429850e+000, -9.259699e+000, -5.875022e+000, 2.854345e+000, 1.327367e-001, -

© ISO/IEC 2004 — All rights reserved


Copyright International Organization for Standardization
Provided by IHS under license with ISO
No reproduction or networking permitted without license from IHS
Not for Resale

2.039555e+000, -7.274847e+000, 5.470360e+000, 1.013135e+001, -1.394321e+001, 1.443008e+001, -2.511418e+001, -4.889820e+000, 1.485383e+001, -1.042627e+001, -9.839017e-001, -3.695189e+000, -1.084787e+001, 4.715824e+000, -2.877159e+000, 1.080411e+001, 9.283910e+000, 6.083592e+000, -5.696730e+000, -3.681775e+000, -5.986560e-001, -6.892482e+000, -7.239029e+000, -1.950413e+000, 8.300720e+000, 6.675033e+000, -1.024535e+001, -6.631842e+000, -7.502719e-001, -1.650100e+001, 7.781318e+000, 5.049903e+000, 5.838198e+000, 3.190260e+000, 3.162906e+000, -1.777661e+000, -4.198503e+000, 6.254962e+000, -6.197161e+000, 7.726429e+000, -1.672852e+000, 2.705298e+000, 3.591303e+000, 8.369262e+000, -1.180525e+001, 7.174266e+000, -4.590318e-001, -4.680054e+000, -5.970500e+000, 4.081196e+000, -9.297200e+000, 6.136683e+000, -8.548552e-001, 4.502018e+000, 9.267250e+000, -4.897505e+000, -1.536023e+000, -2.192676e+000, -5.749555e+000, -4.559161e+000, 8.702805e-001, 5.045196e+000, -7.782885e+000, 1.370389e+001, -7.185926e+000, -1.204510e+001, -5.936972e+000, -7.452061e+000, 7.850257e+000, -1.558160e+001, 1.109389e+001, -7.826779e-001, 8.976677e+000, -1.317343e+000, -2.679141e+000, -6.037407e+000, -6.194626e+000, 1.128154e+001, -1.971291e+001, -7.457776e-001, -8.793154e+000, -6.397285e-001, 4.939756e+000, 5.671867e-001, -9.683964e+000, 1.371310e+001, -1.256810e+000, 3.861183e+000, -4.563586e+000, 6.694058e+000, 2.411623e+000, 1.272985e+000, -3.367689e-001, 9.468680e+000, -5.278603e+000, 2.543012e+000, 2.021838e+000, 6.295624e+000, -2.163285e+000, 6.169496e+000, -3.651680e+000, -5.696148e+000, 3.707711e+000, 8.584260e-002, 3.035228e+000, 1.437032e+000, -4.409859e+000, -4.892636e+000, -5.768192e-001, 1.642463e+001, -2.496866e+000, -6.416834e-002, -4.448546e+000, -6.084821e+000, 3.750179e-001, -2.879372e+000, 1.222089e+001, 3.686723e+000, -6.091944e+000, 3.871348e+000, 6.428029e+000, 1.999176e-003, 3.412332e-001, -5.234869e+000, -3.089318e+000, -6.802764e+000, 5.594677e-001, 1.294479e+001, 5.476063e+000, -1.294129e+000, -1.376420e+000, 9.124183e+000, -3.472357e+000, -3.469423e+000, 3.077680e+000, -2.953277e+000, -4.790770e+000, -5.076330e+000, -9.336758e+000, 5.386213e+000, 6.168940e-006, 2.497372e+000, 3.623676e+000},

{-9.974966e+000, 7.666322e+000, 3.020859e+000, -1.041901e+001, 1.957164e+001, 6.718182e-001, 6.253299e+000, 5.144278e+000, 7.629199e+000, 2.179938e+001, -1.273125e-001, -1.683370e+001, 1.295537e+001, 1.788865e+001, -9.925775e+000, 5.798886e+000, 9.309640e+000, -3.332220e+001, -5.571219e+000, 6.859490e+000, 1.151417e+001, 5.368040e+000, -7.330559e+000, -2.680711e+000, -2.703523e+001, 7.904469e+000, 9.590146e+000, 6.159632e+000, -6.047293e+000, 5.681683e+000, 1.560449e+001, 4.638446e+000, -1.192756e+001, -2.091273e+001, -3.502760e+000, 6.186105e+000, 2.497399e-001, 1.820396e+001, -1.151762e+001, 8.776986e-001, 1.203422e+001, 8.761125e-001, -5.591229e+000, -9.861199e+000, -1.188761e+001, 6.996177e+000, -1.262939e+000, 7.739226e+000, 8.499040e+000, -8.854816e+000, -8.903122e+000, -3.697445e+000, 3.810217e-002, -9.106091e+000, -8.638395e+000, -2.910303e+000, 5.793445e+000, 4.327618e+000, 5.446870e-001, 7.621170e+000, 6.847145e+000, 9.570841e-001, -2.658711e+000, 6.134801e+000, -4.371823e+000, -6.333327e+000, 6.418354e+000, -9.051698e+000, 5.884196e-001, 9.747370e+000, -1.486254e+001, -1.801177e+000, -3.618694e+000, -1.051357e+000, -6.368574e+000, 3.065459e+000, 1.547330e-001, -7.966803e+000, 3.419301e+001, 1.964121e+001, -6.944874e-001, -2.795925e+001, -2.939322e+000, -1.954341e+001, 1.198365e+001, -4.774616e+000, 1.571621e+000, -1.454716e+001, 1.289772e+001, 1.672462e+001, -1.451624e+001, -1.891955e+001, -2.358256e+001, 4.223163e+001, 1.156675e+001, 1.941572e+001, 5.227233e+000, 2.383352e+000, -4.804672e+000, -1.090677e-001, 7.340328e+000, -8.102580e-001, -9.574583e+000, -8.352459e+000, 9.860106e+000, -8.623766e+000, -1.398441e+001, 1.038527e+001, -2.000848e+001, -7.368248e+000, -9.598937e+000, 1.552060e+000, -1.021188e+001, -2.369049e+000, -1.947022e+001, -9.423701e+000, 1.784064e-001, 6.299048e+000, -7.734834e+000, 1.021893e+001, -2.919908e+000, 1.563916e+000, -3.435390e+000, 4.080879e+000, -2.908764e+000, -8.261789e-001, -5.446762e+000, -4.965842e+000, 4.031433e+000, 3.825210e+000, -1.212305e+001, 1.668484e+000, 5.427243e+000, -5.700395e+000, -8.704933e+000, -9.743445e+000, 8.230204e+000, -1.021215e+000, -1.558484e+000, -3.599487e+000, 4.100022e+000, 5.373468e+000, 1.117811e+001, -4.577258e+000, 8.174378e+000, -2.458238e+000, 1.350256e+000, -2.240900e+000, 7.713992e+000, -1.522951e+000, 5.734189e+000, -9.020359e+000, -2.056258e+001, 1.422535e+001, 1.487091e+001, -1.431360e+001, 1.457267e+001, 2.214412e+001, 6.662030e+000, -1.750940e+001, -2.260898e+001, -5.983623e+000, -4.934455e+000, 4.020454e+000, 1.105653e+001, 1.833255e+001, -1.200488e+001, 1.068985e+001, -2.385464e+000, -3.748680e+000, 1.768310e+001, -6.904642e+000, 2.008435e+001, 2.142669e+001, -1.404204e+001, -4.200189e+000, 2.258131e+000, 3.783405e+000, 2.023057e+001, -3.721976e+000, 6.254675e+000, 6.471590e+000, -2.483605e+000, -8.389471e-001, 9.797134e+000, -1.169918e+001, 1.099590e-001, -5.807526e+000, -1.379015e+001, 5.650068e+000, -1.076412e+001, 6.064958e+000, -1.998553e+000, 1.887092e+000, -3.133658e+000, -6.660424e+000, 1.793056e+001, -1.118755e+000, -1.508932e+000, 8.984761e+000, -4.845869e+000, -4.273857e+000, -1.583425e+001, 1.769866e+001, 1.230590e+000, -


© ISO/IEC 2004 — All rights reserved

--`,,```,,,,````-`-`,,`,,`,`,,`---

Copyright International Organization for Standardization
Provided by IHS under license with ISO
No reproduction or networking permitted without license from IHS
Not for Resale

3.211218e+000, 3.109723e+000, -4.823223e+000, -3.129072e+000, -4.065480e+000, -6.259257e+000, -3.333878e-001, 6.322734e+000, 1.241493e+001, 6.945170e+000, -3.589810e+000, 9.384523e+000, -1.045970e+001, -2.879285e+000, 1.038363e+001, -2.848620e+000, -5.010838e+000, 5.707391e+000, 7.623518e+000, -7.272614e+000, -7.134674e+000, 7.591080e-001, 6.757445e+000, 3.187470e+000, 7.238293e+000, 8.991203e+000, -4.421699e+000, 9.691134e+000, -5.374929e+000, -1.668923e+001, 4.355347e+000, -2.253577e+000, -6.786982e+000, 4.700195e+000, -3.246255e+000, 1.529112e+001, 2.866110e-001, 4.171690e+000, -8.334501e+000, 1.385684e+001, 1.228531e+001, -2.663369e+000, -2.570912e+000, 1.521672e+001, -7.019539e+000, -7.690306e+000, -1.794429e+000, 1.169609e+001, -1.511246e+001, -4.940439e+000, -1.010064e+001, -6.243826e+000, -8.045172e+000, 1.319288e+001, 4.443628e+000, 9.638388e-002, 4.934126e+000, 1.129507e+000, 1.002249e+001, 4.187648e+000, 1.558552e+000, 8.855621e-001, 4.203989e+000, -2.765964e+000, -8.616378e+000, 1.781822e+000, -9.601927e+000, -8.840927e-001, -1.058089e+001, 2.577489e+000, 2.989152e+000, -3.067656e+000, -7.135775e+000, 9.077236e+000, -1.288535e+001, 6.496723e-002, 9.805895e+000, 3.626745e+000, 7.138501e+000, -2.658130e+000, -9.259176e+000, -6.678029e+000, -2.529189e+000, -4.957312e+000, 3.613566e+000, 8.890768e+000, -5.501202e+000, -3.837966e+000, -1.262973e+001, -1.293390e+001, 3.605157e+000, 3.886252e+000, -1.228904e+000, -7.546944e+000, 3.407984e+000, -1.490542e-001, -6.934393e-001, -2.060841e+000, 9.120812e+000, -1.940789e+000, 1.610578e+000, 5.879138e-001, -1.895477e+000, 9.841923e+000, 1.121678e+000, 8.670768e-001, 9.686553e+000, -1.581761e+000, 2.074479e+000, -1.293118e+000, -1.329647e+001, 7.008861e-001, 3.819508e+000, -6.526756e+000, -1.230989e+001, 4.868873e-001, 7.645059e+000, 4.560650e-001, 4.829091e-001, -2.699067e+000, 4.380280e+000, -2.163748e+000, 4.710421e+000, 1.898001e-001, -3.191220e+000, -8.534231e+000, 5.659370e+000, 2.083712e+000, -2.860607e+000, -5.989945e+000, 7.129082e+000, -3.191435e+000, 3.681317e+000, 6.581876e+000, -6.906285e+000, 6.622788e+000, 1.236918e+000, 3.241520e+000, -8.997515e+000, -7.653158e-001, -7.675886e+000, 7.224764e+000, -8.126661e+000, 2.718423e+000, 1.592684e+000},

{9.353633e+000, -5.810776e+000, 2.504781e-001, -7.476329e+000, 9.704580e+000, 8.332116e-001, 4.095916e+000, 3.186485e+000, -1.467540e+000, -3.125277e+000, 1.341440e+001, 2.860662e+000, 1.844890e+000, -6.946771e-002, 7.479117e+000, -3.647314e+000, 1.372990e+001, -1.507460e+001, 1.778998e+001, 2.733495e-001, -7.922374e-002, 3.804518e+000, -8.984279e-001, 9.118232e+000, -4.444136e+000, -3.562117e+000, 4.166071e-002, -6.527297e+000, 7.802344e+000, -8.535028e-001, -9.856894e+000, -2.251955e+000, 1.160662e+001, 9.911352e+000, 7.290777e+000, -7.952049e+000, 1.015878e+001, 1.635481e+001, 2.784921e+000, 5.988563e+000, -8.181057e+000, -1.080230e+000, -1.024923e+001, -1.933911e+001, 7.655097e+000, 1.918106e+000, 1.499923e+001, -2.071562e+001, -6.220689e+000, 1.216907e+000, -3.626612e+000, 4.510496e+000, 7.811299e+000, 4.457963e+000, -1.234547e+000, -3.380878e+000, 3.935480e+000, 7.525963e+000, 5.377952e-001, -1.238242e+001, -4.287039e+000, 3.677752e+000, -1.434804e+000, 2.128147e+000, 3.416578e+000, -9.109308e-001, 4.998855e+000, 7.098618e+000, -3.187491e+000, -7.916603e+000, 5.111007e+000, 6.203403e-001, -1.104813e+001, -1.053439e+001, -5.360682e+000, -1.113245e+001, 1.384563e+001, 7.832451e+000, -9.927827e+000, 4.091299e+000, 7.196413e+000, -1.899786e+001, -5.364753e+000, 1.419117e+001, 4.260596e+001, -3.627583e+001, 3.317591e+001, -2.954613e+000, 2.947796e+001, -3.152354e+001, 1.301898e+001, 6.686746e+000, 1.051008e+001, 1.514514e+001, -9.007567e+000, -2.013253e+001, -1.943000e+001, 2.001283e+001, -2.270524e+001, 8.065642e+000, 5.440197e+000, -6.344895e-001, -4.964530e+000, -1.645867e+001, -3.600845e+000, 2.572325e+001, 2.142843e+000, -1.218259e+001, 6.743827e+000, -4.523291e+000, 1.956518e+000, 1.546361e+001, -7.973477e+000, 3.270213e+000, -4.082541e-001, -1.354644e+001, -6.551390e-001, 3.468373e+000, 3.637161e+000, -9.671499e-001, -8.455489e+000, 3.192655e+000, 7.489459e+000, -8.113513e+000, 5.607811e+000, -8.618554e+000, 1.060937e+001, 7.629217e+000, 7.391976e+000, 4.035885e+000, -8.058502e+000, 6.766701e+000, 1.312957e+001, -1.285907e+001, 2.489383e+000, -3.716945e+000, 1.439166e+001, 6.909847e+000, -4.278688e+000, 1.021332e+001, -8.480532e+000, -8.225218e+000, -5.337069e+000, -3.816908e+000, -4.084505e+000, 3.066552e+000, -3.018896e+000, 6.462299e+000, -6.678633e+000, 6.151464e-002, 1.776474e+001, 2.384390e+001, -9.721208e+000, 5.422410e+000, -1.454301e+001, 9.494164e+000, -3.037182e+000, 1.014134e+001, -7.099631e+000, 3.987085e+001, 9.782213e+000, 2.053724e+001, 6.013126e-001, -3.759569e+000, 2.246497e+001, -6.719878e+000, -1.624073e+001, 5.281179e+000, -4.495518e+000, 1.371751e+001, 1.838475e+001, 2.129326e+001, -7.669231e+000, -3.672235e+000, -4.611069e+000, 2.380734e+000, 7.372595e+000, 8.133759e+000, -1.337645e+001, 5.224403e+000, -7.103992e+000, -1.264576e+001, -2.411605e+000, -8.542116e+000, -6.901599e+000, 7.411950e+000, 7.559278e+000, 1.752715e+001, 2.877990e+000, 3.385202e-001, -6.604347e+000, 2.422911e+001, -3.813278e+000, 6.109589e+000, -9.430844e-001, 2.268489e+000, -3.363071e+000, -1.958861e-001, 5.105708e+000, -1.732832e+000, -1.548282e+000, 2.254208e+000, 3.982161e+000, 1.284362e+001, 6.200517e+000, -6.274645e+000, -1.106662e+001, -

© ISO/IEC 2004 — All rights reserved


Copyright International Organization for Standardization
Provided by IHS under license with ISO
No reproduction or networking permitted without license from IHS
Not for Resale

1.122026e+001, -5.575066e+000, -3.760398e+000, 9.796013e+000, -2.675227e+000, 4.138077e+000, -1.227193e+001, -1.626733e+000, -2.658618e+000, -1.169559e+000, 6.775285e+000, 1.169938e+001, -2.095683e+000, -1.591137e+000, 1.330727e+001, 1.661720e+000, 8.720028e+000, 6.074434e+000, -1.120927e+001, 6.537449e+000, 1.059983e+001, -9.022175e+000, 3.759554e+000, 5.471076e+000, 2.004793e+001, 1.240037e+001, -9.964148e+000, -7.198492e+000, 2.585470e+000, -1.883860e+001, 1.267775e+001, 3.097726e+000, -4.687914e+000, 5.115609e+000, 8.962259e+000, -7.664228e+000, -6.795323e+000, 6.134489e+000, -3.234250e+000, -6.082547e-001, 9.222217e+000, 3.853014e+000, 9.763816e-001, 2.696000e+000, 8.761496e+000, -1.261167e+001, 1.799670e+001, -1.249215e+001, 1.406378e+001, 1.584206e-001, 1.324376e+000, 8.263892e+000, 3.648049e+000, 9.470251e+000, 1.001949e+001, -1.515700e+001, -1.992560e+001, 5.347973e+000, -1.897668e-001, -1.006246e+000, 4.048797e+000, -9.447207e+000, 5.699180e-001, 1.343526e+001, 1.220195e+000, 3.568470e+000, -3.457793e+000, 4.370421e+000, 1.402167e+000, 3.250136e+000, 5.136626e+000, -1.553571e+000, 1.208448e+001, 1.813368e+000, 3.844135e+000, 2.924136e+000, 5.583903e+000, 5.620609e+000, 4.783243e+000, -7.448834e+000, -1.697899e+000, -4.370172e+000, 7.650392e+000, 3.420019e+000, -1.619773e+000, -7.576845e+000, -1.045691e+001, 3.839858e+000, 1.412384e+001, -1.139324e+001, -2.942770e+000, -1.115591e+001, 2.707536e+000, 7.706523e+000, 2.954148e+000, 1.995345e+000, -1.084326e+001, 3.415034e-001, -2.157346e+000, 9.912875e+000, -6.730639e+000, -4.186857e+000, 9.745018e+000, 1.159425e+001, -7.407255e-001, 7.038610e+000, -1.101778e+000, 4.390858e+000, 1.016166e+001, -2.933481e+000, -4.306548e+000, -1.690499e-001, 7.050712e-001, -4.627845e-001, -3.333824e+000, -1.490338e+001, 1.713577e+000, -1.387787e+000, 2.964113e+000, 3.941787e+000, 8.257440e+000, -3.448036e+000, 1.140247e+001, 6.084441e+000, 1.997203e+000, 3.168466e+000, -6.333525e+000, 2.095629e+000, -6.794166e+000, 2.966681e+000, -1.162330e+001, 1.050594e+001, -9.057534e-001, -7.144787e+000, -8.626652e+000, -3.670662e+000, 5.766262e+000, 8.920290e+000, -9.817787e-001, -6.649122e+000, -1.655354e+000, 1.124236e+001, -1.550392e+000},
{1.026738e+001, 8.954819e+000, 7.588810e+000, -5.381937e+000, -6.811683e+000, -1.248972e+000, 1.148414e+001, 5.921425e+000, -9.404234e+000, -2.018271e+001, 8.369687e+000, -6.081140e-001, -5.538174e+000, -5.950351e+000, -1.458008e+001, -3.269595e+000, 1.160313e+001, -2.289980e+001, -5.319293e+000, 1.624405e+001, 9.282804e+000, 4.453920e+000, 2.262897e+000, -1.109115e+001, 3.814229e+000, 2.022846e-001, -5.948378e+000, 4.901308e+000, -8.985107e+000, 1.109172e+001, 6.602925e+000, 1.602639e+000, 3.260367e+000, 2.019579e+000, 8.555014e+000, 6.006932e-001, 1.275158e+001, 5.055068e+000, -9.679319e+000, 2.116217e+000, 1.509880e+001, 1.714016e+001, -2.512592e+000, 1.373323e+001, 6.501539e-002, 9.143926e+000, 1.207101e+001, -5.630425e+000, 2.991211e+000, -1.218175e+000, 1.179626e+001, 1.144784e+000, -1.940659e+000, 1.096110e+000, -5.526629e-001, -3.082141e+000, 1.867604e-001, 7.588999e+000, 9.924842e+000, -1.202438e+001, 2.106960e+000, 5.989064e+000, -2.589928e+000, -7.538431e+000, 3.866200e+000, -7.469622e+000, -6.282942e+000, 5.361651e-001, -2.224226e+000, 6.658106e+000, 2.886185e+000, -8.514861e+000, -1.316754e+001, 5.616431e-002, -5.495592e+000, -1.400141e-001, 4.651285e+000, -3.337492e+000, -1.209651e+000, -6.596411e+000, 7.726785e+000, 1.839025e+001, 1.486323e+000, 1.669089e+000, 1.344553e+001, -9.547451e+000, -1.955345e+001, -4.553425e+000, 5.105571e+001, 2.185314e+001, -1.380156e+001, 8.536878e-001, -1.507943e+001, -2.605591e+001, -2.859940e+001, 2.198376e+001, 2.253067e+001, 4.674140e+000, 9.662773e+000, -8.750604e-001, 3.846489e+000, 8.865262e+000, 2.896766e+000, -1.626442e+001, 2.951867e+000, 8.472639e+000, -1.991881e+001, -7.353221e+000, 7.524567e+000, -3.388079e+000, 5.380907e+000, -8.167514e+000, -4.884317e+000, -4.010167e+000, 3.989643e+000, -1.437489e+001, 5.955773e+000, 1.237597e+001, 9.791970e+000, -1.314917e+001, 8.337012e+000, -3.303093e+000, 2.678206e+000, 4.157484e+000, -1.199124e+000, -8.590881e+000, -6.404176e-001, 4.859615e-001, 8.043367e-001, -2.483890e+000, -6.008875e+000, -3.545066e-001, -5.454783e+000, 8.047351e+000, -6.667436e+000, -9.428849e+000, 2.744791e+000, -2.022427e+000, -3.639900e+000, 9.471868e+000, 2.918455e+000, 1.678552e+000, 4.867924e+000, -1.089450e+001, -8.182771e+000, -4.477129e+000, 9.061099e+000, 7.644936e+000, 2.865368e+000, 1.756088e+000, -1.488721e+001, -1.459502e+001, -3.357261e+001, -1.861357e+001, 4.545585e+001, -1.925770e+001, -2.562080e+001, -2.834318e+000, -5.061259e+000, 1.250976e+001, 2.398176e+000, -7.464921e+000, 1.403973e+001, 3.066720e+000, 1.692223e+001, 1.722245e+001, -2.702057e+000, 1.592665e+001, 2.849264e+001, -7.883408e+000, 5.688682e+000, -1.208429e+001, 7.615794e+000, 8.327741e-001, 2.453769e+000, -9.685326e+000, 3.030849e+000, -9.307269e+000, 4.151743e+000, 1.271961e+001, 1.140987e+001, 6.958073e+000, 3.240517e+000, -1.660436e-002, 5.423491e+000, -1.424549e+000, 9.388721e+000, -9.956680e+000, -9.513795e+000, -1.203372e+001, -5.486411e+000, -2.269838e+000, 2.840973e+001, -2.148353e-001, -7.066612e+000, -3.303870e+000, -6.634489e+000, 1.618935e+001, 2.229767e+000, -1.918541e+000, 7.045117e+000, 1.020789e+001, 6.083201e+000, 5.962142e+000, -5.591275e-001, -8.103321e+000, 5.096917e+000, -1.819986e+000, -1.047844e+001, -1.129306e+001,


© ISO/IEC 2004 — All rights reserved

Copyright International Organization for Standardization
Provided by IHS under license with ISO
No reproduction or networking permitted without license from IHS
Not for Resale

1.492486e+001, -4.098280e+000, -1.271850e+001, -5.789854e+000, 1.151719e+000, 1.647719e+000, -4.962049e+000, -2.651822e+000, -1.115896e+000, -2.497170e+000, -2.385768e+000, -1.542373e-001, 8.706914e+000, 3.113900e+000, 6.014378e+000, -7.084906e+000, 3.883505e+000, -3.992973e+000, 8.470806e+000, 7.541501e+000, -4.326099e+000, 5.845968e+000, 2.720045e+001, 4.467791e+000, -1.552761e+001, -1.110002e+001, 6.774985e+000, -8.320226e+000, 1.360832e+000, 5.170364e+000, -2.171936e+000, 2.132065e+001, 9.978004e+000, -2.974022e+000, -8.314825e+000, -1.248721e+000, 7.287488e+000, 9.480263e+000, 2.690699e+000, -2.995967e+000, -5.238157e+000, -5.476613e+000, 1.724670e+000, -6.745115e+000, 3.772869e-002, 4.436379e+000, -6.353961e+000, 3.050914e+000, -9.047179e+000, -1.021553e+000, 6.473709e+000, 8.443975e+000, 8.281887e-001, 4.684339e-001, 3.676596e-001, 6.804065e+000, 3.257336e+000, -4.997859e+000, 6.647463e+000, 2.400883e+000, 7.566335e+000, 5.511872e-001, 6.519223e+000, -9.613362e+000, -6.423638e+000, 4.307689e+000, -8.081392e+000, -1.075004e+001, -6.604921e+000, -3.541449e-001, -3.786558e+000, 4.804422e+000, -1.673887e-001, 4.708926e+000, -2.729970e+000, 2.772918e+000, -5.745377e+000, 1.118851e+000, -1.221150e+001, 1.473128e+000, 1.005094e+001, -1.091867e+001, 6.133921e+000, 4.017787e+000, 4.927933e+000, 1.057225e+000, -5.518155e+000, 7.003932e+000, -2.100955e+000, -8.701945e+000, -1.229598e+000, 5.725799e+000, 3.021451e+000, -4.160367e+000, 5.712651e+000, -7.030690e+000, 8.532844e-001, 1.747050e+000, -8.433870e-001, -6.504273e-001, 1.003662e+000, -1.789464e+000, 5.005516e+000, -7.394559e-001, -1.847066e+000, -1.437176e+000, 4.888251e+000, 1.352771e+000, -8.208442e+000, 1.990984e+000, -1.377759e+000, -1.401365e+000, -5.228235e+000, 9.445452e+000, 1.303059e+001, -4.671300e+000, -7.617116e+000, -3.830485e+000, -6.837567e+000, 6.363805e+000, -6.160153e+000, -3.753627e+000, -2.758076e+000, -3.850520e+000, 5.447026e+000, 1.023896e+001, 6.606879e+000, -8.554998e-001, 5.928460e+000, 6.445300e+000, 6.701298e-001, -5.257252e-001, -6.600380e+000, -7.931475e+000, 4.836335e+000, -2.755249e+000, 1.382275e+000, -4.098715e+000, 2.089540e+000, -2.995012e+000},

{-1.731764e+001, -8.997341e+000, 6.759088e+000, 1.435303e+001, -1.195446e+001, -5.937422e+000, -8.230625e+000, 1.345894e+001, -5.535430e+000, 1.089759e+001, 5.025168e+000, -7.345326e-001, 3.735246e+000, 2.937832e+000, 1.216946e+001, -4.651451e-001, -5.744079e+000, 7.712017e+000, -4.221948e+000, -1.762675e+001, 1.388056e+001, 1.636571e+001, -7.173675e+000, 3.002877e+000, 3.473894e+000, 1.224725e+001, 8.737289e+000, 4.376371e-001, -2.617990e+000, -1.416414e+000, -5.676069e+000, 2.945175e+000, -9.009465e+000, -1.351047e+001, 2.169412e+000, -7.405193e+000, -8.659612e-001, 9.478412e-001, 4.850474e+000, 1.151949e+001, -5.978067e+000, -9.194571e+000, 1.267729e+001, 7.548964e-002, -3.201823e+000, 1.138020e+000, 4.182758e+000, 3.676270e+000, -5.345523e+000, 6.470207e+000, -4.654389e+000, 1.022699e+001, 2.369599e+000, -2.543141e+000, 1.737588e+000, -1.168058e+001, 1.141069e+001, -1.707481e+000, 1.321165e+000, 1.002977e+001, -4.543759e-001, 4.228143e+000, -2.080574e+000, -3.496733e+000, 5.046734e+000, -1.659674e+001, 1.859011e+000, -1.029926e+001, -3.290096e+000, 5.328797e-001, -1.054425e+001, -7.552570e+000, 7.293193e+000, 7.512525e+000, 1.252795e+001, -8.657204e+000, -2.031488e+000, 1.962969e+001, 6.232783e+000, -1.376609e+000, -1.253372e+001, -5.741196e+000, 1.229386e-001, 1.226122e+001, 1.835273e+001, -6.488484e+000, -2.555186e+001, 3.171209e+001, 2.385435e+001, 4.241000e+000, 2.729058e+001, -3.443890e+001, -2.017196e+001, -3.942238e+000, 3.495269e+001, -5.463214e+000, 2.567443e+001, -2.367892e+001, -1.767629e+001, -1.138480e+001, 1.901336e+000, 4.416946e+000, -4.423772e+000, 1.448231e-001, 7.008313e+000, 6.674118e+000, -1.283585e+001, 2.096394e+000, 5.569964e+000, 2.850257e+001, 3.789757e+000, -1.125313e+001, -3.422362e+000, 8.563436e+000, -3.217825e+000, -3.794745e-001, -1.840512e+001, 5.813154e+000, -6.993692e-001, -5.051134e+000, 2.476591e+000, 4.934095e+000, 1.369085e+001, 2.814679e+000, 1.131374e+001, 4.850653e-001, 4.967516e+000, 4.249368e+000, -1.280421e+001, -1.729714e+001, 2.328683e+000, -2.626449e+000, -7.371506e+000, 9.507497e+000, -3.501321e+000, -9.903340e+000, 3.405495e+000, -6.597956e+000, -8.503316e+000, -7.127705e+000, -1.721825e+000, -1.400403e+000, 7.805399e+000, -5.700174e+000, -1.337252e+001, -1.839649e+000, -6.994225e-001, 4.481424e-001, 3.223016e+000, -8.291492e-002, -9.949237e-002, 2.559577e+001, -6.970755e+000, 1.189400e+001, 7.189088e-001, -4.812370e+000, 9.160359e+000, 1.127434e+001, -9.677582e+000, -2.779931e+001, -5.981578e+000, -1.619375e+001, -5.415334e+000, -1.708308e+001, -6.025131e-001, -1.342725e+001, -1.549656e+001, 6.534415e+000, -8.792545e+000, 2.128572e+001, 4.501821e+000, -2.273613e+001, 6.340185e+000, 7.524898e+000, -4.789835e+000, -9.101514e+000, 4.544067e+000, 1.752610e+000, -4.463801e+000, -1.699200e+001, -1.055789e+001, 8.940644e+000, -4.332498e+000, 6.355888e+000, 3.498411e+000, 1.129212e+001, -1.273722e+001, 5.412322e+000, 1.481692e+001, 6.646277e+000, -6.209668e+000, -1.119185e+001, -2.061153e+001, -1.224713e+001, -7.038097e+000, 2.367175e+001, 1.402650e+001, -1.700958e+001, -5.044566e+000, 3.997931e+000, -2.931534e+000, -2.207627e+001, 1.962145e+000, -4.227896e+000, 2.418738e+000, 5.664373e+000, -5.883686e+000,

© ISO/IEC 2004 — All rights reserved


Copyright International Organization for Standardization
Provided by IHS under license with ISO
No reproduction or networking permitted without license from IHS
Not for Resale

3.850821e+000, 7.308096e+000, 8.827872e+000, -1.746198e+001, 1.360225e+000, 8.849931e+000, 4.097391e+000, 9.667705e+000, -8.719187e+000, 6.326886e+000, 2.497170e+000, 1.155609e+001, 1.074602e+000, -1.713616e-001, 1.797785e+000, -1.027844e+001, 7.097033e+000, -1.198043e+001, -1.431358e+000, 7.110972e+000, -2.236482e+000, -1.055030e+001, 9.236116e+000, -1.572018e+000, 9.766045e-001, -1.972666e+001, 2.312753e+000, 1.092634e+001, -1.803867e+000, 2.077455e+001, 1.188267e+001, -5.188315e+000, -9.375531e+000, -1.896681e+000, 2.070511e+000, 6.383708e+000, -9.805603e+000, -3.695012e+000, 9.700535e+000, -7.832381e+000, -4.193282e+000, -1.112349e+001, -9.088219e+000, 3.591462e+000, -3.075885e+000, 6.175506e+000, -4.259982e+000, -6.854652e+000, 8.968750e+000, -4.890574e+000, 6.145136e+000, 1.157453e-001, -2.581563e-001, -6.863582e-001, -2.176350e+000, -1.096753e+001, -1.760368e+000, -1.325358e+001, -7.245784e+000, -2.024019e+000, 3.730138e+000, -7.145546e-001, -2.206568e+000, -2.321347e+001, -4.289375e+000, 1.415143e+001, 8.552301e+000, -2.261191e+001, 1.947519e+001, 1.106645e+001, 9.750378e+000, -2.234127e+000, 8.297011e-001, -3.956813e+000, -1.399830e-001, 4.253511e+000, -6.464684e-001, 2.034826e+000, 5.154844e-001, -3.680203e-001, 6.758992e+000, 1.430245e+001, -9.590548e+000, -8.406357e-001, 4.839979e+000, -4.290268e+000, 7.596781e-001, -7.681363e+000, 6.699168e+000, 1.167906e+001, -2.132855e-001, 2.382879e+000, -5.729138e+000, 4.086499e+000, 6.588875e-001, -1.093496e+001, 1.767844e+000, -2.351633e+000, 2.257621e+000, 1.463042e+000, -3.047314e+000, 3.793631e+000, 6.477998e-001, -1.260507e+001, 1.305267e+001, -1.476150e+001, 3.746605e+000, 4.045588e+000, 7.072190e+000, -1.853241e+001, 1.244187e+001, 1.979250e+000, -1.096241e+000, 4.950383e+000, 2.308049e+000, -1.170082e+001, -1.684370e+000, -3.562909e+000, 1.224928e+001, 6.263337e+000, 8.991606e+000, -6.397093e+000, -2.780961e+000, 7.562943e-001, -3.913564e+000, 5.157086e-001, 2.126124e+000, -4.124744e+000, -8.010205e+000, 5.632868e+000, 6.755353e+000, 5.213830e+000, -3.360512e+000, 9.547879e-001, -7.784152e+000, 5.970460e+000, -5.501697e+000, 1.622455e+000, 4.874913e+000, -1.092971e+000, -2.668735e+000, -1.089864e+001, 4.064463e+000},

{2.323051e+000, -1.041370e+001, -7.733109e+000, 2.044404e+001, 2.307739e-001, -1.412987e+001, -2.492116e+000, 6.549098e+000, -5.036068e-001, 7.869369e+000, 1.380611e+001, -1.138480e+001, -2.689766e+000, -4.448851e+000, 8.074298e+000, -4.787458e+000, 1.144132e+001, 4.059733e+000, -1.659907e+001, -2.155898e+000, -8.880086e+000, 9.339909e+000, 1.402807e+001, -7.951428e+000, 1.599203e+000, 1.418394e+001, 1.288399e+001, -8.225295e+000, -5.019678e+000, -4.011166e+000, -1.069480e+001, -7.629389e+000, -1.044471e+000, -2.092841e+000, -1.604587e+001, -4.602828e+000, 6.368315e+000, -3.698733e-001, -1.460603e+001, 6.503212e+000, -3.864903e+000, 6.068284e+000, -1.263586e+001, 4.863558e+000, -1.429275e+000, -7.719166e+000, 5.189684e+000, 8.051132e+000, -5.050651e+000, -8.860573e-001, -8.370112e-001, -1.054367e+001, -8.918067e+000, 1.015410e+001, 7.763288e+000, 1.054426e+001, 6.325245e+000, -5.648154e+000, -1.068230e+001, 4.149499e+000, 6.217318e-002, 6.228832e+000, -1.121889e+000, -7.738181e-001, 9.433503e+000, -3.706490e+000, -7.618970e+000, -1.392029e+000, 1.054226e+001, -1.903314e+000, -8.040495e+000, -1.059740e+000, 1.262216e+001, -2.425943e+000, 5.217279e+000, 1.104901e+001, 4.310840e-001, -4.371228e+000, 1.342097e+001, -1.480633e+001, -1.824739e+001, -6.750983e+000, -1.455178e+001, 1.809122e+001, -1.092914e+001, -2.780401e+001, -8.044394e+000, 2.092398e+001, 2.011146e+001, 9.572241e+000, -1.050545e+001, 3.643276e+001, -1.426638e+001, 2.533016e+001, 1.266966e+000, -5.913128e+000, 2.554719e+001, -2.185493e+001, 1.954611e+001, -2.196487e+001, 1.006076e+001, -1.745385e+001, 3.290589e+001, -8.918109e+000, -1.450593e+001, 2.634888e+001, 2.196556e+001, -7.309408e+000, 1.794836e+001, 3.191571e+000, -1.638230e+001, 7.031703e+000, 2.308243e+000, -3.160577e+000, 1.087056e+001, -1.318368e+000, 1.301114e+000, -1.846757e+000, 1.203690e+000, -4.079023e+000, -1.915160e+001, 3.352271e+000, -3.671006e+000, 2.756066e+000, -6.832610e+000, 1.229373e-001, 5.656391e+000, -3.193115e+000, 1.158397e+000, -6.134864e+000, 3.244577e+000, -5.428940e+000, -3.230893e+000, 1.523040e+001, -3.825534e+000, -9.158931e+000, -1.137918e+001, 1.031979e+001, -7.781476e+000, 6.231770e+000, -1.353596e+000, 5.779563e+000, 5.915971e+000, 1.066028e+000, 3.361797e+000, 2.832503e+000, 6.963065e+000, 1.948983e+001, -6.025282e+000, -3.466304e-001, -8.075648e+000, 5.128601e+001, -2.361050e+001, 1.260842e+001, -6.515262e+000, -2.447750e+001, 2.142754e+001, -1.364493e+001, 2.863382e-001, -5.978759e-001, -6.141886e+000, 7.425122e+000, -5.410525e+000, -1.480443e+000, 1.309661e+001, -7.815489e+000, -6.591091e+000, 1.271397e+001, -1.635528e+001, -1.971664e+000, 9.519973e+000, 9.023050e-001, -1.734340e+001, 5.133507e+000, 5.180858e-001, -2.122498e+001, 6.922828e+000, 5.049974e+000, -7.332220e+000, 4.756046e+000, -1.318354e+001, 3.228305e+000, 1.592979e+001, -1.073280e+000, -5.109591e-001, 3.510970e+000, 2.835453e+000, -2.458860e+000, 1.351332e+001, 1.084116e+001, -1.065869e+001, 5.602133e+000, 2.065413e+001, 5.512889e+000, -8.374656e-001, 2.382770e+001, -7.023463e+000, -4.098864e+000, 2.687601e+000, 5.679127e+000, 1.383395e+001, -5.853061e+000, 3.623336e-001, -2.812659e+000, -7.015366e+000, 8.214936e+000, 1.254912e+001, 1.814065e+001, -6.930253e-001, 8.740400e+000, 4.295826e-001, 5.590064e+000, 2.293535e+000,


© ISO/IEC 2004 — All rights reserved

Copyright International Organization for Standardization
Provided by IHS under license with ISO
No reproduction or networking permitted without license from IHS
Not for Resale

1.061358e+000, -1.111318e+001, -1.046828e+001, -1.446784e+001, 3.997763e+000, -2.587087e+000, 1.709165e+001, -1.251884e+001, 1.555332e+000, 3.066804e+000, 4.840357e+000, -1.206098e+000, 3.108177e+000, 3.966443e+000, 6.186552e+000, -4.169465e+000, -5.937816e+000, 9.578532e+000, 9.448460e+000, -1.831325e+001, -1.279780e+001, 1.373103e+001, 6.767979e+000, -3.577779e+000, 2.891249e+001, -1.238600e+001, -1.177994e+000, -8.937011e-001, -8.694145e+000, -8.322243e+000, 6.004550e+000, -1.633595e+001, -7.148045e-001, 1.290538e+001, 1.000562e+001, -9.149753e+000, -1.287553e+001, 5.176947e+000, -1.218099e+001, 5.854320e+000, 4.839321e+000, -1.055677e+000, 8.447397e+000, 5.393826e+000, -6.104864e+000, 4.657408e+000, 6.069503e+000, -6.076344e+000, 3.408691e+000, -5.649641e+000, -5.216595e+000, -4.675573e+000, -1.093092e+001, -8.769632e+000, 9.003103e-001, -2.995790e+000, 8.055829e+000, -2.696394e+000, 5.566039e+000, 6.852812e-001, -5.325419e+000, 9.186756e+000, -7.976820e+000, -3.301452e+000, -8.911747e+000, -6.051174e+000, -3.028211e-001, -6.971573e-002, 3.532589e-002, -2.620881e+000, -3.139900e+001, -4.274949e+000, -6.341765e+000, -5.517343e+000, 1.366046e+000, 1.183235e+001, 1.030173e+000, -1.426176e+000, -7.183109e+000, -1.170110e+000, -5.217054e+000, 7.117218e+000, -9.466320e+000, -3.775626e+000, 3.547317e+000, -2.250813e-001, -1.377358e+001, -1.197239e+001, -1.619050e+000, -7.630979e+000, 1.397973e+000, 6.934165e+000, 8.738312e-001, -4.696488e+000, 3.186662e+000, 9.828864e+000, -7.698528e-001, -1.889886e+001, 3.587703e+000, 1.017548e+001, -4.628750e+000, -6.358112e+000, -5.405204e+000, 5.927701e+000, 1.318069e+001, -6.191252e+000, 3.510104e+000, -5.301443e+000, 6.079072e+000, -2.138462e+000, -5.255335e+000, -4.466866e+000, 7.167314e+000, 1.722083e+001, 9.358065e-001, 5.565187e+000, -9.558765e+000, -8.649991e-001, -4.473529e+000, 3.214054e+000, -7.178374e+000, 8.767754e-001, 6.692784e+000, 4.417500e-001, -1.916342e+000, 8.098935e+000, 5.573898e+000, 3.452750e-001, 1.471030e+000, 8.356028e+000, -3.353361e-002, 1.661788e-001, -3.042096e+000, 2.251031e+000, -5.403581e-002, -1.702435e+001, -5.280324e+000},

{-6.085137e+000, 2.907629e+001, -8.101615e+000, 9.427203e+000, 6.869252e+000, -5.044688e+000, -8.752123e+000, -8.929768e+000, 7.392388e+000, -2.404051e+001, 2.112431e+001, 2.980992e+001, -7.311415e+000, 3.132868e+000, 7.351751e-001, 1.235507e+001, -3.130633e+000, -6.682282e+000, 1.121927e+001, 2.262344e+001, -3.775308e+000, -5.855311e-001, -2.655814e+000, 1.684920e+001, -1.466426e+001, -4.011753e+000, -5.634397e-001, -5.039288e+000, -1.254476e+001, -6.185912e-001, 9.594132e-001, 4.782585e+000, 7.531775e+000, 6.911446e+000, 3.472374e+000, 3.382969e+000, 3.393505e+000, 1.074698e+001, 8.762743e+000, 1.322762e+001, -8.805660e+000, 2.046342e+001, 1.099644e+001, -4.718724e+000, -7.641575e+000, 7.495631e-001, 3.721706e+000, 1.914846e+001, 3.353931e+000, -1.367937e+001, 4.483709e+000, 1.225491e+001, 6.997040e+000, -1.335812e+001, -1.164242e+001, 3.305421e+000, -1.598706e+001, -3.430871e+000, -6.566336e+000, -9.417903e+000, -1.606254e+000, 8.044024e-001, -3.370704e+000, 3.426752e+000, -8.187489e+000, 6.269161e+000, 7.047383e+000, -4.580799e+000, 6.320620e+000, -7.254666e+000, 2.306288e+000, 4.153216e-001, 1.511056e+000, 5.292131e+000, -1.148113e+000, 3.827771e+000, 1.490798e+000, -9.800053e+000, 1.800455e+001, 3.510420e-001, 1.408875e+001, -1.133334e+001, -1.095793e+001, 2.846003e+000, 1.644934e+001, 3.025337e+001, 1.581111e+000, -3.139344e+001, 2.894245e+001, -7.750926e+000, -1.701483e+001, -3.662979e+000, 3.120006e+001, -4.770462e+000, 2.404520e+001, 6.224741e+000, 1.672985e+001, -8.368401e+000, 2.220151e+001, 2.341761e+001, 1.823158e+001, 1.244290e+001, 1.000070e+001, 1.069306e+001, 2.863557e+000, 9.933646e+000, 6.486661e+000, 9.570551e+000, 7.105491e+000, 6.622575e-001, -7.324958e+000, 2.015731e+001, 1.643343e+001, 9.125881e+000, 2.553135e+001, -1.067983e+001, -5.467305e-001, -5.397298e+000, -1.558094e+000, -1.345678e+000, -1.842589e+000, 2.611029e+000, -7.904100e+000, 9.499595e+000, -1.292527e+001, -6.653966e+000, -1.077597e+001, 7.506327e+000, 4.056000e+000, 2.086694e-001, 2.899007e+000, 1.329462e+001, 6.318382e+000, -3.431289e-001, -4.146507e+000, 8.943712e+000, 3.874734e+000, -6.575770e+000, 9.339366e+000, -2.391067e+000, -7.254181e+000, -2.279127e+000, 9.394661e+000, -2.123278e+000, -9.582437e-001, -5.638272e+000, -9.788121e+000, 1.819326e+000, -2.299152e+000, -7.595652e-001, -3.251712e+001, 1.494824e+000, 1.771547e+001, 1.450599e+001, -2.216122e+000, 9.143166e+000, -1.808393e+000, 1.906130e+001, -2.470852e+001, -2.679702e+001, 2.808337e+000, 2.412458e+001, 2.481770e+000, -1.651507e+001, -3.446941e+001, 2.761151e+000, 1.048211e+001, -1.783697e+000, 2.629453e+001, 3.142267e+000, 2.025983e+000, 1.057794e+000, -2.089411e+001, 3.387702e+000, -1.233921e+001, -3.089617e+001, -1.064218e+001, 1.598323e+001, -8.822050e+000, 7.366148e+000, 1.100675e+001, -1.092380e+001, 2.820014e+000, 1.036011e+001, -1.322803e+001, 1.326477e+001, 1.281393e+001, -4.050706e+000, 4.546128e+000, 2.365384e+001, -5.934067e+000, 2.550176e+000, 6.772679e+000, -1.126973e+001, -4.055851e+000, 2.303791e+000, -1.521236e+001, -6.181816e-001, -8.203925e+000, -2.739361e+000, -1.069830e+001, -3.440036e+000, -1.493668e+001, 2.077921e+001, 1.778898e+001, 4.304121e+000, -1.361870e+001, -1.933774e+000, -1.029731e+001, 5.954000e+000, -5.789269e+000, 8.256079e+000, 2.310715e+000, -1.154219e+000, 8.890687e+000, -

© ISO/IEC 2004 — All rights reserved


Copyright International Organization for Standardization
Provided by IHS under license with ISO
No reproduction or networking permitted without license from IHS
Not for Resale

8.845876e+000, -6.549038e+000, 6.844819e+000, 3.460798e-001, 1.550719e+001, -7.150082e+000, -4.077905e+000, -1.101829e+000, 7.455659e+000, -7.431854e+000, -6.527299e+000, 3.112597e+000, 2.637009e+000, 4.268639e+000, 4.031111e+000, 3.859565e+001, 1.462603e+000, -9.565724e+000, 1.720740e+000, 1.092419e+001, -6.002913e+000, -2.305208e+000, -6.789550e+000, 8.760127e+000, 1.641314e+001, -2.963735e+000, -7.613753e+000, 5.001585e+000, 1.502345e+001, 1.006853e+001, 1.303601e+001, -1.513935e+001, 2.238446e+000, -6.024098e+000, -3.734470e+000, 5.560968e+000, -1.160956e+001, -7.268591e+000, 2.623678e+001, 7.669749e+000, -4.870348e+000, -2.668438e+000, 1.355195e+001, 1.424320e+001, 8.528675e-001, -4.628399e+000, 1.086396e+001, 3.937280e+000, 1.833174e+001, -1.203888e+000, 3.534101e+000, -3.477829e+000, 3.371937e+000, -5.114200e+000, 2.117945e+000, -4.513663e-001, 2.607316e+000, -2.435177e-001, 3.780924e+000, -5.281917e+000, -1.474994e+001, -1.050041e+000, 8.977310e+000, -5.781670e+000, -1.217884e+000, 1.184160e+000, 5.634192e+000, 3.068394e+000, 1.098768e+001, -6.079642e+000, -9.320206e+000, 3.570300e+000, 1.417592e+001, -4.751062e+000, -1.172426e+001, -2.924020e-001, 4.085663e+000, -1.324994e-001, 4.457307e+000, 3.960865e+000, -7.238473e-001, -7.251625e+000, 5.170963e+000, -7.603262e-001, 7.938613e+000, -5.289408e+000, -6.441261e-001, -1.907266e+000, -4.154841e+000, -2.040496e+000, 5.133381e+000, -5.351342e+000, -2.833674e-001, 1.101106e+000, -9.425669e+000, 1.042467e+001, -5.544245e+000, -1.434945e+000, -1.240904e+000, -6.338706e+000, -5.627313e+000, 1.085094e+001, -9.344031e+000, 1.372749e+001, -3.793178e+000, 3.470829e-001, -9.325707e+000, 1.393644e+001, -4.477416e-001, 8.140483e-001, -5.506252e-001, -7.632291e+000, -6.901512e+000, -1.350885e+001, -3.003833e+000, 5.830890e-001, -2.101549e-001, 5.799447e+000, -1.158470e+000, -6.709449e-001, -1.673346e+000, 3.027257e+000, -8.359364e+000, -1.336620e+000, 2.302811e+000, -2.362355e+000, 3.988135e+000, -1.514145e+000, 5.816335e+000, -3.269365e+000, 2.301297e+000, 7.870444e+000, 1.119667e+001, 4.867792e+000, -8.737981e+000},

{-1.717865e+001, 3.637341e+000, -3.516037e+001, 5.248058e-001, -1.409351e+001, 3.914869e+000, 5.478342e-001, -2.728387e+001, 2.993442e+000, 2.049619e+001, -1.093279e+001, -8.057168e+000, -1.450659e+001, -1.956156e+000, -2.763965e+001, 5.113811e+000, -6.587016e+000, -6.538848e+000, 8.308294e+000, 1.123733e+001, 1.248759e+001, -7.499360e+000, -6.116406e-001, 5.996766e+000, 4.195759e+000, 4.173205e+000, -3.282958e+000, 1.877217e-001, 1.101175e+001, -2.061695e+000, -2.078019e+001, -5.110897e+000, 2.764917e+000, -8.057594e-001, -9.435097e+000, 9.295510e+000, -3.526861e+000, 9.853512e+000, -1.917772e+000, 7.928844e+000, -1.506630e+001, 2.391670e+000, -5.811289e-001, -1.900840e+000, -1.294238e+001, 5.044747e+000, -1.045608e+000, 1.897690e+000, 1.181555e+000, 1.004643e+001, -1.707318e+000, -3.140020e+000, 2.784498e-001, -5.433477e+000, 1.126676e+001, -1.300303e+001, -5.204935e+000, 1.193290e+001, -2.345489e+001, 1.063739e+001, -6.774872e+000, -3.521936e+000, 5.813355e+000, 1.182349e+001, 8.940886e+000, 2.530843e+000, -9.310806e-002, -1.456282e+001, -3.689905e+000, 2.580181e+000, 2.471610e+000, 1.309357e+001, 1.834597e-001, 8.037749e+000, 4.715118e+000, -3.742490e+000, -4.039077e+000, -5.008315e+000, -1.290494e+001, -1.718073e+001, 6.480526e+000, -1.602256e+001, 1.885984e+001, 1.866804e+001, 7.363486e+000, -4.237410e+000, -2.101183e+001, -5.028984e+000, 7.839152e+000, 1.418339e+001, -2.583363e+000, 3.048896e+000, 3.125301e+001, 3.878919e+001, -2.288129e+001, -1.939326e+000, 1.535584e+000, -1.459181e+001, 7.529494e+000, -1.600926e+001, -2.748880e+001, 7.430201e+000, 2.355562e+001, -1.190664e+000, 1.784422e+001, -1.979562e+000, -2.294243e+001, -3.536556e+000, -1.571892e+001, -6.115385e+000, 5.708341e+000, 2.645920e+001, -1.226576e+001, 4.547089e+000, -1.322827e+000, 2.111457e+001, 1.928121e+000, 1.061983e+001, 7.168623e+000, -8.232632e+000, 3.717515e+000, 4.686878e+000, -1.245631e+000, 6.097444e-001, 7.226445e+000, 1.542769e+001, -9.267777e+000, 1.235448e+001, 1.667825e+000, 1.016700e+001, 1.083781e+001, 8.324277e+000, 4.194431e+000, -2.714109e+000, -5.466185e-001, 1.352662e+001, 4.679688e-001, -5.507246e+000, -3.917205e+000, -7.791038e+000, -2.386496e+000, -3.148045e-001, 6.553185e+000, 7.670666e+000, 9.919794e+000, -2.127611e+000, -4.913241e+000, -2.091877e+000, -4.102006e-001, 5.867972e+000, 1.049365e+000, 2.464295e+001, 9.451649e-001, 1.724906e+001, 3.636058e+000, -6.756666e+000, 1.401555e+001, 1.640226e+001, -2.039388e+001, 1.610516e+001, 3.822518e+000, -2.316448e+001, -1.204414e+001, 4.223911e+000, 1.832376e+001, -2.146269e+000, 7.546841e+000, -3.163536e+000, -2.721133e+001, 1.236963e+001, 2.768760e+000, 5.020036e-003, 1.954945e+000, 1.085325e+001, -4.885783e+000, 1.203650e+001, 3.147797e+000, 2.534009e+000, -1.911140e+000, -1.088972e+001, 1.759709e+000, -3.900044e+000, -3.339590e+000, 3.743223e+000, 4.865290e+000, -4.164158e+000, -7.380759e+000, 3.474589e+000, 1.357185e+000, -6.968321e+000, -7.568616e+000, -3.800517e+000, 1.149317e+001, 6.772051e-001, 7.476173e-001, 1.585685e+001, 3.591081e+000, 1.463387e+000, 5.498534e+000, -5.067777e+000, 7.613240e+000, -5.195014e+000, 7.082162e+000, 5.226747e+000, 5.976814e+000, -2.963281e+000, 1.170145e+001, 4.152828e+000, 1.270138e+001, 1.338468e+001, -9.122320e+000, 4.742682e+000, 4.836534e-001,


© ISO/IEC 2004 — All rights reserved

Copyright International Organization for Standardization
Provided by IHS under license with ISO
No reproduction or networking permitted without license from IHS
Not for Resale

1.436136e+001, -3.711850e+000, -4.576447e+000, 3.194200e+000, 1.437082e+001, 1.066553e+001, 1.237612e+001, 1.472733e+000, 4.033686e+000, -3.817126e+000, 3.924331e+000, -4.978807e+000, 5.106115e+000, 4.484895e+000, 5.580709e+000, 8.033594e+000, -3.103540e+000, -3.119281e+000, -2.610130e+000, 6.907523e+000, 2.682606e+000, 2.217210e+000, 6.083375e+000, 1.743155e+000, 8.173823e+000, -2.804133e+000, 2.408306e+000, -1.492996e+001, 1.442707e+001, -4.495570e+000, 8.296972e-001, -1.362504e+001, 7.523383e+000, 7.871769e+000, 9.914019e+000, 6.556155e-002, 1.524410e+000, -1.560189e+001, 2.113216e+000, 7.172800e+000, 1.286919e+001, -7.626794e+000, 6.506278e+000, -2.752269e+000, 2.041865e+000, -4.326391e+000, -4.396613e+000, -1.355065e+000, 6.441303e-001, -4.651345e+000, -2.330024e+000, 8.537983e-002, -1.667888e+001, -1.510975e+000, -1.487886e+001, -6.458531e+000, 9.315526e+000, -9.314152e+000, 1.258653e+000, -5.384669e-002, -8.371379e+000, 6.804115e+000, -7.057734e+000, -8.308914e+000, 3.043293e-001, 1.737728e+000, -1.280713e+001, -8.264030e+000, 3.353299e-001, 4.427013e-001, 4.493649e+000, 3.466004e-001, -2.307140e+000, 2.032734e+000, 1.179673e+000, 1.928394e+000, 6.768817e+000, -1.828267e+001, 1.032619e+001, -7.791142e+000, 8.711121e-001, -1.371246e+001, -8.633279e-001, 1.194732e+000, -1.270924e+001, -8.734699e+000, -3.255166e+000, 9.930732e-003, 5.248534e+000, -1.469753e+000, 1.274044e+001, -4.101437e+000, -1.330348e+001, 1.264099e+001, 2.755653e+000, -2.582171e+000, 1.218830e+001, -1.754383e+001, 4.984107e+000, -8.631699e+000, -2.837020e+000, 3.860787e+000, -5.567530e+000, 5.551352e+000, 3.322853e+000, 1.767351e+001, 2.095435e+001, 1.053698e+000, 5.075054e+000, -1.299643e+001, 2.951156e-001, -2.557224e+001, -1.074347e+001, 4.495656e+000, -4.371535e+000, 1.130949e+001, -4.801873e+000, 9.195372e+000, 8.404516e+000, 4.782831e-001, 1.253722e+001, 2.571995e+000, 7.941708e-001, -1.256514e+001, 4.309750e+000, 8.130285e+000, 1.746370e+000, 9.111289e+000, 4.964511e+000, 4.067350e+000, -1.438380e+001, -1.092052e+001, 2.465261e+000, -9.289539e+000, -1.662299e+000, -4.422659e+000, 4.925267e+000},

{3.105964e+000, -1.402340e-001, 1.156752e+001, 2.235728e+001, 1.404026e+001, 5.974572e+000, -5.685612e+000, 1.863701e+001, 1.527871e+001, 5.450482e-001, 3.303348e+000, -1.474043e+001, 1.676912e+000, -6.996509e+000, 1.900215e+001, -9.227090e+000, 1.281547e+001, -8.852323e+000, -1.620682e+001, -6.164999e+000, -2.118058e+001, 1.839067e+001, -7.929808e+000, 1.600145e+001, -1.845341e+000, -6.618944e+000, 5.419350e+000, 1.035887e-001, -2.159320e+000, 2.657132e-001, -1.442333e+001, 6.757407e+000, 3.710866e+000, -3.875866e+000, 4.804783e+000, -6.731420e+000, 5.043124e-001, -3.689600e-001, -9.130541e+000, -8.584346e+000, -3.461559e-001, -1.121908e+001, -7.771448e-001, 1.031438e+001, 1.269336e+001, 6.313959e+000, -2.644925e+000, -8.609921e+000, 2.518753e+000, 5.400969e+000, 8.341260e+000, 3.588975e-001, 2.202948e+000, 3.478327e+000, 8.216661e+000, 1.912982e+001, -2.575283e+000, -3.223402e+000, 7.954852e+000, 2.310346e-002, 4.938183e+000, 1.695281e+000, -2.039051e+000, -7.120641e+000, 2.050304e+000, -1.208303e+001, -3.782046e+000, 6.614183e+000, -6.983320e+000, 9.831217e+000, 5.778799e+000, 9.055007e+000, -2.690430e+000, 4.901361e+000, -5.383565e+000, 1.383263e+001, 6.971072e+000, 1.331707e+001, -2.014316e+001, 1.020468e+000, 8.424005e+000, 6.498894e+000, 5.037244e-002, -4.131557e+000, 7.067956e+000, -1.848076e+000, -4.208189e+000, 1.655971e+001, -9.218818e+000, 3.473400e+001, 4.387997e+001, 1.946141e+001, 3.230656e+000, 9.948290e+000, 8.607824e+000, -7.643387e+000, 2.149029e+001, 1.200623e+001, -7.139254e+000, 5.949513e+000, -7.351604e+000, -7.011158e+000, 4.946336e+000, 2.330660e+001, -1.523388e+000, 1.128542e+000, -1.271588e+000, -2.511005e+001, -1.266353e+001, -1.455397e+001, 8.839430e+000, -1.603953e+000, 5.007247e+000, 1.506311e+001, -4.140360e+000, 7.218075e-001, 8.892073e+000, -1.152415e+001, -1.012575e+000, -7.865443e+000, -2.531878e+000, -9.297681e+000, 1.056877e+001, 6.362132e+000, -1.902407e+001, -2.540970e+000, 2.934819e+000, 1.356299e+001, -2.177498e+001, 1.955762e+001, 6.902529e+000, 6.937088e+000, 6.840389e+000, -8.882953e+000, 6.631765e+000, 5.926444e+000, 3.745968e+000, -7.401649e-002, -1.475715e+001, -1.135019e+000, 1.032741e+001, -1.465380e+001, 5.907798e-001, -1.145961e+001, -1.446280e+001, 6.835506e-001, -3.120428e+000, -8.895991e+000, 4.362923e-001, 5.913162e+000, -1.887138e+000, -2.545617e+001, -1.880223e+000, 1.101524e+001, 1.587199e+001, 3.222590e+000, -5.317546e+000, 3.866212e+000, -8.087739e+000, 7.252193e+000, -3.059316e+001, 1.892881e+001, 1.996210e+001, -2.995399e+001, -3.284076e+000, 1.582042e+001, 5.336945e+000, 5.269568e+000, -2.340001e+000, -2.819394e+001, -2.387116e+001, 1.063042e+001, 2.508846e+000, -4.630430e+000, 5.810008e+000, 2.864603e+000, 8.119241e-001, -1.240827e+001, 6.644170e+000, 1.124585e+001, -8.062347e+000, -1.622914e+000, 3.186669e+000, -1.280190e-001, 5.475313e+000, -2.023654e+000, 9.567687e+000, 3.093719e+000, -2.615948e+000, -7.539346e+000, -1.730448e+000, -7.347961e+000, 1.762360e+000, -4.860245e+000, 7.985375e+000, -7.532192e+000, 1.305656e+001, -1.063632e+001, 3.556951e+000, -1.048513e+000, 4.244822e+000, -7.545942e+000, 1.515939e+001, -8.019452e+000, 4.500953e+000, 4.780405e+000, -1.515043e+001, -6.862167e+000, 8.858234e+000, -1.650683e+000, -5.428652e+000, -6.322379e-003, -4.992176e+000, 3.354147e+000, 3.942054e+000, -

© ISO/IEC 2004 — All rights reserved


--`,,```,,,,````-`-`,,`,,`,`,,`---

Copyright International Organization for Standardization
Provided by IHS under license with ISO
No reproduction or networking permitted without license from IHS
Not for Resale

9.904545e+000, -1.035622e+001, 5.025812e+000, -7.375777e-001, 2.143343e+000, 1.913879e+000, -1.124646e+001, 4.049374e+000, 1.000085e+001, 4.132370e-001, -3.062796e+000, 2.470069e+000, -1.703081e+000, -2.983638e+000, -5.551162e+000, -5.898770e+000, -9.124997e+000, 9.862901e+000, 1.570144e+001, 8.588061e+000, -5.706950e+000, -4.769423e-001, -1.890534e+001, 4.147530e+000, -1.014912e+001, 9.466695e-001, 6.274200e+000, -9.762642e+000, 8.460656e+000, -1.151837e+001, 1.435736e+000, 8.821528e+000, 4.298801e+000, 3.852416e+000, 3.971375e+000, 7.948433e+000, 7.486729e+000, 4.261694e-001, 1.274568e+001, 5.442881e+000, -6.014306e+000, 5.710385e+000, -8.343875e+000, 5.737295e+000, -1.937373e-001, 6.336108e+000, 1.577104e+000, -5.528922e+000, 2.461320e+000, 4.698591e+000, 9.208893e-001, 1.750648e+000, -1.138023e+000, 9.805593e+000, 1.733979e+000, 1.494497e+001, 8.281165e+000, -2.857875e+000, 2.519727e+000, -1.849239e-001, 2.519372e+000, -4.664557e+000, -5.832454e+000, -1.827975e+000, 6.646215e+000, -3.997781e+000, -1.450438e+001, 2.587678e-001, -8.160930e+000, -1.681785e+000, 7.334230e+000, -1.044311e+001, 2.598421e+000, -6.563998e+000, -1.380058e+000, -6.864440e+000, 3.610872e+000, 5.651437e+000, -6.757699e+000, -1.794496e-001, 7.130493e+000, -5.011278e+000, -7.715938e-001, 2.772013e+000, 8.613059e+000, 9.975541e+000, -1.316505e+000, -7.449653e+000, -4.036899e+000, 3.086094e+000, -7.251681e+000, -2.178149e+000, -4.057886e+000, -5.202804e+000, -1.153135e+000, 4.591921e+000, -7.434454e+000, -4.820669e+000, -4.710459e-001, 1.559319e+000, -1.090301e+001, -2.874393e+000, 4.540500e+000, -1.221448e+001, -1.045694e+001, 6.550010e-001, 2.272582e+000, -1.667634e-001, -1.464428e+000, 4.723076e+000, 6.624589e+000, 4.579857e+000, -3.562836e+000, -2.773417e+000, 1.048161e+000, 1.356600e+000, 1.049399e+000, -7.075672e+000, 5.140361e+000, 3.528615e+000, -1.373815e+000, -2.656149e+000, 2.359461e+000, 1.835569e+000, -9.889397e+000, -1.004126e+001, -8.268923e-001, -2.829939e+000, 3.209666e+000, 7.634097e-001, -1.224827e+001, 2.742478e+000, 3.580482e+000, 3.836974e+000, 1.369058e-001},
{1.940823e+001, -3.835986e+000, 3.252220e+001, 2.813104e+001, -3.350631e+000, -1.413045e+001, 5.838440e+000, 2.374862e+001, 6.579170e+000, -1.096683e+001, 8.042544e+000, -6.839762e+000, -2.424651e+001, 2.784055e+001, -9.214874e+000, -1.833563e+000, 1.516412e+000, 1.412987e+001, -1.043317e+001, 5.758311e+000, -5.737640e+000, 3.247171e+000, -1.183457e+001, 6.012506e+000, -6.863365e-001, -1.715448e+001, -7.234699e-001, -1.790030e+000, -1.280419e+000, -2.837512e+000, -2.822248e+001, 1.146164e+001, -2.207815e+001, -5.910196e+000, 2.216118e+000, 1.048183e+001, -3.728019e+000, -5.720400e+000, -1.313948e+001, -4.843224e+000, 2.271655e+001, -1.015769e+001, -8.310745e+000, 1.825884e+001, -1.601352e+000, 2.272517e+000, -2.521937e+000, 1.449941e+001, 1.947273e+000, -2.143936e+001, 1.324383e+001, -9.067624e+000, -7.820113e-001, 6.070421e+000, 1.663720e+001, -4.452095e+000, -2.792709e+000, -9.720281e+000, -6.962486e+000, 6.544198e+000, -1.325141e+001, 2.063328e+000, -2.637313e+000, 5.107428e+000, 1.102310e+001, -1.511146e+000, -8.066241e+000, 7.023430e+000, 5.352996e-002, 1.033197e+000, -2.909375e+000, 4.788392e+000, 4.128910e+000, -2.554397e+000, 1.522787e+000, 1.802679e+001, 5.420422e+000, 9.723521e+000, 6.247995e+000, -2.636960e+000, -2.628820e+001, 2.700846e+000, -5.736810e+000, 1.992955e+001, -1.128728e+001, -2.970732e+001, -1.432405e+001, -3.040569e+000, 2.852184e+000, -1.998093e+001, 2.395939e+001, -6.441479e+000, 4.663385e+000, 2.338680e+001, 1.544272e+001, -3.370552e+001, -2.618981e+001, 4.180066e+000, 3.095075e+000, 2.455382e+001, 6.011186e+000, -4.815196e+000, 2.278072e+001, 6.906204e+000, -1.490514e+001, -9.699439e+000, -3.427423e+000, 2.027037e+001, 1.410284e+001, -3.664289e+000, 1.683494e+001, 1.982760e+000, 1.361838e+001, 5.506178e+000, 1.624781e+000, 6.046741e+000, 8.946068e+000, -1.694073e+000, -8.383244e+000, 2.379892e+001, 1.714825e+001, 9.200772e+000, -1.503822e+001, 9.639109e+000, -6.560230e+000, 9.647890e+000, -1.589843e+001, 9.833774e-001, 4.798056e+000, -1.988623e+000, -5.958320e+000, 1.374708e+001, -5.696440e+000, 1.327486e+001, -5.167845e-001, 1.794033e+001, 1.729170e+001, -4.935145e-001, -2.185694e+000, 8.623782e+000, -3.742390e+000, -6.869470e-001, 2.998056e+000, -2.227941e+000, 1.729863e+000, 5.406504e+000, 6.983088e-001, -4.326152e+000, 1.936439e+000, 5.258137e+000, -3.668206e+000, -4.466048e+001, 2.308449e+001, -2.451074e+001, -5.722331e+000, 4.422025e+000, 1.101948e+001, -2.059368e+001, -5.731466e+000, -5.241501e+000, -6.274879e+000, -2.625088e+001, -1.680765e+001, -1.419606e+001, 6.194378e+000, -1.614464e+001, -4.043094e+000, -5.439711e+000, 3.902106e+000, 6.359755e+000, 1.421539e+001, 3.667011e+000, 1.877911e+001, -7.388620e+000, -3.371982e+000, 6.549256e+000, -1.356247e+001, 5.068890e-001, 7.547700e+000, -1.728619e+001, -2.830884e+000, 1.131769e+001, -1.453657e+001, -1.429128e+001, 1.493148e+000, -1.680459e+000, 1.162058e+001, 1.211280e+001, 1.000287e+001, 2.252137e+000, 1.739240e+001, -1.144643e+001, -4.793656e-001, 1.406515e+001, 2.207588e-001, 3.151489e+000, 2.230038e+001, -9.234300e+000, -3.059872e+000, 1.417181e+001, 2.443770e-001, -1.177158e+001, 1.046282e+001, 1.432536e+001, -2.091891e+001, -2.939079e+000, -3.475160e+000, 1.609702e+001, -1.176114e+000, -7.943650e+000, 1.470737e+001, -3.451692e+000, -4.430413e+000, 1.818985e+001, -2.567554e+000, 4.048438e+000, -2.855772e-001, 7.104372e+000, 7.415692e+000, 1.047554e+001,


© ISO/IEC 2004 — All rights reserved

Copyright International Organization for Standardization
Provided by IHS under license with ISO
No reproduction or networking permitted without license from IHS
Not for Resale

-2.958154e+000, -2.481508e+000, -1.050271e+001, 1.521452e+001, -5.072847e+000, 3.944856e+000, 1.635680e+000, -1.709352e+000, 4.611263e+000, -4.789934e+000, -8.778312e+000, -1.323222e+001, -1.602377e+001, 8.268789e+000, -8.225018e+000, -1.221444e+000, 1.157739e+001, 4.573148e+000, -1.900280e+001, -1.494846e+001, 5.444857e+000, -2.175758e+000, -6.738105e+000, -1.005932e+001, 6.831906e+000, 7.821824e+000, -3.185933e+000, -1.588595e+000, -1.120243e+001, -8.206709e+000, 5.775106e+000, -6.971387e+000, 1.697805e+000, 1.675322e+001, 1.057667e+001, -1.469902e+001, -2.332888e+000, 2.392920e+001, 7.485971e+000, 1.842637e+001, 3.765847e+000, 4.988508e+000, 5.349462e+000, -6.141369e+000, 3.970726e+000, 7.316895e-001, 3.695388e+000, -1.406862e+001, -4.927662e+000, 1.490007e+001, -5.993714e-001, 1.074395e+001, 9.068902e-001, 3.044776e+000, 7.324964e+000, 9.704835e-001, 2.676585e+000, 1.500533e+001, -8.668176e+000, 1.817890e+000, -2.550647e+001, -9.553746e+000, 1.281374e+001, -3.647079e+000, 3.329556e+000, 7.291068e-001, -1.304160e+001, 9.182352e+000, -2.367636e+000, 6.004001e+000, -6.680402e+000, 1.673447e+000, 2.806655e+000, -4.337861e+000, 3.417095e+000, 2.438044e+000, 8.250167e-001, -4.113132e+000, 8.704502e-001, 7.623062e+000, 3.933680e+000, 1.925761e+000, -8.339218e+000, 4.276221e+000, -1.042937e+001, -3.785111e+000, -9.704162e-001, 4.587138e+000, -7.722436e+000, -4.310364e-001, 1.825496e+001, -2.432216e+001, 1.744781e+001, 1.050735e+001, 2.267593e+000, -1.381497e+001, 1.968632e+000, -8.958590e+000, 7.434126e+000, 1.803250e+001, 7.087424e+000, 5.630525e+000, -1.931581e+001, 1.805773e+000, 3.345248e+000, 2.912241e+000, 7.914854e+000, 9.551217e+000, -4.246197e+000, 3.959944e+000, 1.745905e+001, -9.422961e+000, -3.753994e+000, -3.181452e+000, -1.074001e+001, -1.145866e+001, -7.012117e+000, -5.738637e+000, 6.568584e+000, -8.202968e+000, -5.028586e+000, 1.146036e+001, -1.969676e+000, -1.573578e+000, 4.997171e+000, 5.516719e+000, -6.113741e+000, -2.797227e+000, 7.242850e-002, 3.519231e+000},

{4.574995e+000, 1.353330e+001, 1.917794e+000, 1.026845e+001, 3.738912e+000, -2.858354e+001, -2.804869e+001, 1.188987e+001, -4.356970e+000, 5.392133e+000, 1.058437e+001, -1.439813e+001, 3.472388e+000, 1.174384e+001, -1.583493e+000, -4.871476e+000, 1.245804e+001, -2.312053e-001, -7.440057e+000, 1.506938e+000, 1.300856e+001, 2.540274e+000, -3.269486e+000, 4.196907e+000, -6.315572e+000, 2.877804e+001, -2.383068e+001, 5.236487e+000, -7.160798e+000, 3.751034e+000, 1.338625e+000, 1.252269e+001, -2.213791e+000, -7.078405e+000, -2.278026e+000, 3.613501e+000, 1.065902e+001, 7.319635e-001, -7.949064e+000, 8.302294e+000, 1.126451e+001, 6.855154e+000, 9.865621e+000, 9.222208e+000, -1.549993e+001, -4.815059e+000, 3.395732e+000, 1.051094e+001, 7.560921e+000, -1.806288e+000, 1.239206e+001, -1.143658e+000, 6.712750e+000, -3.297510e+000, 8.144143e+000, -2.455474e+000, -2.725137e+000, -2.913671e+000, 3.195632e+000, 7.149642e+000, 4.952740e+000, 1.216709e+001, -1.430836e+000, -3.280155e+000, 6.640961e+000, 1.463887e+000, -3.141115e+000, -3.861443e+000, 2.470655e+000, 5.154800e+000, 6.021543e+000, -3.683644e+000, -1.516515e+000, -5.290026e+000, 4.010813e+000, 7.505272e+000, -1.596377e+001, 1.033703e+001, -3.082078e+000, -4.433687e+000, 2.459980e+001, 3.685909e+000, 1.183383e+001, 1.403449e+001, -4.148351e+000, -1.664030e+001, 3.325153e+000, 2.083284e+001, -1.743270e+001, 4.725486e+001, -4.989448e+001, -2.991346e+001, -5.425266e+000, -4.157572e+000, 1.127715e+001, -5.149386e+001, 1.882848e+001, 1.593284e+001, 4.286070e+000, 1.516055e+001, -1.749643e+001, 1.918265e+000, 4.615204e+000, -5.756979e+000, -1.913931e+001, -1.871479e+000, -2.044898e+001, 2.228698e+000, -1.304435e+001, 8.743638e-001, 1.983100e+000, 9.311806e-001, 2.382394e+001, 1.076952e+001, -1.137410e+001, -7.046472e+000, 6.145866e+000, -3.745617e+000, -1.330177e+001, -1.364995e+001, 6.315967e+000, -2.372168e+000, 5.488105e+000, -6.981502e+000, 4.336057e+000, 2.352686e-001, 4.612709e+000, -3.215031e-001, -9.087976e+000, -8.512960e+000, -3.250309e+000, 3.225268e+000, -1.016243e+001, 7.858637e+000, 3.629102e+000, 2.139759e-001, -1.190107e+001, 1.303357e+001, -1.058235e+000, 8.549644e+000, -6.151519e-001, 7.768892e+000, 7.636790e+000, -3.754700e+000, -3.180573e+000, 5.435983e-001, 1.249906e+000, 6.465937e+000, 1.195790e+001, -5.268592e+000, -2.310303e+001, -1.718418e+001, -1.096549e+001, -1.637766e+001, 3.295530e+001, 5.214929e+000, -1.143678e+001, -2.229443e+000, -1.539201e+001, -2.155250e+001, 6.058615e+000, 1.074489e+001, -1.058858e+000, -1.932643e+000, 1.587057e+000, -1.988950e+000, 1.471492e+001, 2.059919e+001, -5.915256e-001, 2.154890e+001, 5.995788e+000, -1.786436e+001, -5.943356e+000, -7.989452e+000, 1.482022e+001, 5.149629e+000, 4.511831e+000, -1.036705e+001, 1.458898e+001, 2.390298e+000, 6.142397e+000, -6.632519e+000, -4.982248e+000, 1.429584e+001, -1.621572e+000, 2.416147e+000, -3.369817e+000, -1.678379e+000, -1.802033e+001, -1.513510e+001, -1.746614e+000, -1.528821e+001, 7.895980e+000, 6.332645e+000, -2.437305e+000, 1.643007e+001, -2.209241e+001, 9.653530e+000, 1.896436e+001, 6.846521e+000, 7.852308e+000, -4.190797e+000, 4.502213e+000, -4.968725e+000, 2.388453e+001, 4.882854e+000, -4.652545e+000, 9.592380e+000, -1.250334e+001, 8.220252e+000, 5.760876e+000, -4.550538e+000, 6.823385e+000, -1.814243e+000, 3.569628e+000, 1.287507e+001, -1.054008e+001, -3.659042e+000, 5.728644e-001, 3.148571e-001, 8.378257e+000, -5.657513e+000,

© ISO/IEC 2004 — All rights reserved


Copyright International Organization for Standardization
Provided by IHS under license with ISO
No reproduction or networking permitted without license from IHS
Not for Resale

-6.212360e+000, 1.018388e+001, 3.485427e+000, 5.723338e+000, 2.709582e-001, 2.364583e+000, -3.915406e+000, 8.306506e+000, -7.171921e+000, -5.831437e-002, 2.152997e+001, -3.380223e+000, 5.326650e+000, 8.519063e+000, 2.262083e+001, 1.745022e+001, 8.270003e+000, 4.524225e+000, -4.641967e+000, -4.973282e+000, -3.189402e+000, -1.279431e+001, 6.681465e+000, -9.864611e+000, -9.735885e+000, 6.299516e+000, 6.861017e+000, -8.408864e+000, 3.238264e+000, -7.647678e+000, 9.001275e+000, 5.959778e+000, 3.592115e+000, 1.660973e+001, 1.895060e+000, 1.518279e+000, -7.889695e+000, -1.273091e+001, -3.284273e-001, 6.671954e+000, 2.227162e-001, 5.845132e+000, 9.637366e+000, -6.629058e+000, -1.610492e-001, 1.472676e+000, 6.055288e+000, -4.284540e+000, 4.004722e+000, 2.249385e+000, -1.304190e+000, 2.841671e+000, 2.054627e+000, -7.304495e+000, -5.676461e-001, 1.192234e+001, -1.747357e+001, -1.791381e+000, -6.645270e+000, 3.838058e+000, 7.746448e+000, -9.416826e+000, 1.468344e+000, 1.610865e+000, 5.625415e+000, -3.616944e+000, -2.353865e+000, -5.292538e+000, 6.160207e-002, -1.434353e+001, 9.307570e+000, 1.289165e+000, -5.560445e+000, 8.414112e+000, 8.815275e+000, 5.528409e+000, -6.709651e+000, -9.585998e-001, 3.695150e+000, 1.804366e+000, 2.452842e+000, -2.326133e+000, -4.607154e+000, 1.734405e+001, 8.754699e-001, 4.705892e+000, 2.390796e+000, -6.271645e+000, -1.050377e+001, -5.792284e+000, 6.825441e+000, 5.492801e+000, -3.370698e-001, -1.058453e+001, -4.886277e+000, -4.953251e-001, 1.303576e+001, 1.894566e+001, -9.233616e+000, -1.298184e+000, 8.382475e+000, 7.091496e+000, 1.548367e+001, 2.747229e-003, 4.266576e+000, 9.422245e+000, -1.066846e+001, 2.534530e+000, -1.388870e+001, -2.350729e+000, 2.353209e+000, -7.209453e+000, 1.613006e+000, -2.608745e+000, -7.295636e+000, 3.245809e+000, -8.348493e-001, -7.235148e+000, -7.254259e-002, 1.042622e+000, 5.020976e+000, 6.362033e+000, 1.103926e+000, -1.025463e+001, 1.693464e+000, 2.681856e+000, -1.028512e+001, 6.576779e+000},
{-5.641070e+000, -7.473390e+000, -9.762614e+000, 1.056528e+001, 8.204400e+000, -3.832414e+000, 6.004704e+000, 8.201919e-001, -4.667888e+000, -5.148793e+000, 1.275662e+001, 2.395491e+000, 2.581058e+000, -3.867140e+000, -8.021585e+000, -1.204611e+001, 1.036971e+001, -2.626182e+001, -8.017402e+000, -2.227516e+000, -1.846562e+001, 1.193845e+001, 4.216655e+000, -4.248800e+000, -1.806766e+001, 1.043193e+001, 1.098850e+001, -3.736283e-002, -5.946518e+000, -5.906641e+000, 1.415143e+000, -1.243643e+001, 4.101353e+000, 1.194122e+001, -4.063207e+000, -5.501085e+000, -7.316536e-003, 2.459348e+000, 3.945324e+000, -4.884514e+000, -2.614417e+000, -3.270342e+000, -2.894254e-001, 1.399679e+001, 3.258733e+000, -7.155265e+000, -5.250681e+000, 6.370042e+000, -5.042605e+000, 4.694985e+000, -6.141300e+000, 4.517225e+000, 5.169661e+000, 8.033852e+000, -8.230340e+000, 9.355572e+000, 1.331751e+001, -6.983090e+000, -2.392782e+000, 8.232564e-001, 1.791294e+000, 8.958388e-001, -8.499044e-001, -1.009485e+001, 3.203901e+000, 5.797099e+000, -4.044050e+000, 7.098456e+000, -1.444581e+001, 8.964125e+000, 4.232556e+000, -7.241139e+000, 7.496658e+000, -7.733010e+000, 1.070341e+001, 3.451170e-001, 2.943351e+000, -8.871341e+000, 1.250040e+001, -5.546509e-001, -4.998680e+000, -5.921989e+000, 3.085213e+000, 1.195734e+001, -2.831423e+001, 2.511403e+001, 7.035565e+000, -3.164699e+001, 6.826305e+000, 3.586863e+000, 1.903665e+001, 1.668601e+001, 1.584959e+001, -9.146819e-001, 2.033341e+001, 6.633969e+000, 3.922721e+001, 1.308424e+001, -3.292943e+001, 1.843095e+001, -2.409055e+000, -1.110115e+001, 9.756335e+000, -4.257343e+001, -8.226217e-001, 2.248228e+001, -2.071848e+001, 9.081056e+000, -6.400490e+000, -7.477172e+000, -1.545980e+000, -1.592981e+001, 6.117009e-001, -6.726001e-001, -1.474843e+000, 1.705894e+000, -4.495059e-001, 5.164954e+000, -1.204645e+001, -4.361196e+000, 1.443854e+000, -3.743841e-001, 1.280410e+001, 3.957558e+000, -2.963810e+000, 2.857721e+001, -7.618329e+000, 3.350050e+000, 2.454999e+000, -4.287263e+000, 3.910695e+000, 3.685380e+000, -2.746335e-001, -6.047930e+000, -2.733109e+000, -7.160701e+000, 3.396072e+000, 8.295215e+000, 9.126566e+000, 6.419070e+000, -1.121852e+001, -4.234777e+000, -5.348991e+000, 2.311290e+000, -1.582705e+001, -7.837249e+000, -4.601455e+000, 6.984107e+000, -9.667766e-001, -8.505054e-001, 5.429702e+000, 1.096222e+001, -2.536050e+001, 6.218258e+000, 1.164467e+001, 2.175961e+000, -1.024396e+001, -6.807487e+000, 2.814305e+001, 2.747079e+001, 1.620969e+001, -8.578785e+000, -2.815022e+001, 1.801207e+000, 7.257971e+000, 9.140633e-001, 1.767382e+001, 1.070611e+001, 1.689020e+001, 1.144763e+001, -2.676214e+001, 1.957459e+000, 1.583198e+000, 6.873284e+000, 1.605520e+001, -6.355470e+000, 7.677009e+000, -9.435197e+000, -4.427664e+000, 1.033760e+001, 1.070352e+001, -9.611681e-001, -6.228675e+000, 1.303076e+001, 1.218972e+001, -1.041760e+001, 1.792458e+000, -2.443468e+001, -9.440657e-001, -1.877604e+001, -1.383343e+001, 6.751141e-001, 1.386287e+000, -2.112347e+000, -5.923130e+000, 8.186365e+000, 2.097598e+001, -1.365941e+000, -1.291995e+001, 2.927833e+000, 1.535544e+001, 4.601436e+000, -7.232388e-002, -2.631603e+000, 8.117613e+000, 6.697776e+000, -6.452811e-002, -9.112954e+000, -1.323026e+001, 2.888723e+000, 2.215041e+000, 6.187630e+000, -1.835262e+000, 3.726764e+000, -1.649189e+001, -1.025006e+001, 6.490334e+000, 6.347030e+000, -1.224019e-001, -2.156394e+000, 5.317044e+000, 4.745419e+000, -1.864547e+000, 2.597258e+000, -4.622115e+000, -3.433742e-001, -2.824299e+000, 4.366212e+000, 3.804895e+000, 1.869793e+000, 1.354815e+001,


© ISO/IEC 2004 — All rights reserved

Copyright International Organization for Standardization
Provided by IHS under license with ISO
No reproduction or networking permitted without license from IHS
Not for Resale

2.113319e+001, 1.922817e+001, 2.648026e+000, -2.003662e+001, -3.033379e+001, -3.847248e+000, -5.995755e+000, 8.390522e+000, 1.403266e+000, 1.204698e+001, 4.130462e+000, -9.246611e+000, -8.172817e+000, -6.487115e+000, -7.397761e+000, -1.216002e+000, 8.226890e+000, -4.412036e-002, 4.754576e+000, -1.384715e+001, 6.144301e-001, -5.935888e+000, -1.569160e+000, -1.665429e+001, -1.586466e+001, 8.555317e+000, -3.412809e-001, -4.358144e+000, -5.766604e+000, 1.349752e+001, 9.044464e+000, -4.879740e+000, -1.966739e+001, 2.075794e+000, -1.804855e-001, -1.595997e+001, -9.227048e+000, -1.605775e+000, 3.790798e+000, 1.175399e+001, 2.332934e+000, 2.776577e+000, -1.330680e+001, -5.233885e+000, 1.514390e+000, 1.589443e+001, -5.364335e+000, -2.316068e+000, -9.725954e+000, 2.026468e+000, -4.153940e+000, 9.522131e+000, -5.374162e-001, -4.126876e+000, 7.093618e-001, 7.222355e-001, -9.260961e+000, -1.059854e+001, -7.020508e+000, 4.629206e+000, 1.549034e+001, 1.380796e+000, -1.196411e+000, -7.322593e+000, 7.766010e+000, 1.080504e-001, -1.803544e+000, -6.708763e+000, 4.045658e+000, -5.396578e+000, -1.308510e+000, 2.257027e+000, -3.653006e+000, 1.363893e+000, -5.558917e+000, 1.775676e+000, 6.390137e+000, -4.560866e-001, -2.827087e-001, 1.171531e+001, 4.634835e+000, 1.884250e+001, -4.490038e+000, -6.130277e+000, 1.879519e+001, -6.334245e+000, 2.580626e+000, -7.379356e+000, 3.084412e+000, -3.195767e+000, 1.826842e-001, -1.413573e+001, -2.529161e+001, -3.297829e+000, 3.240614e+000, 1.586315e+000, -1.146347e+001, -1.300920e+001, 1.732818e+001, 1.549014e+001, 5.474244e+000, 3.139067e+000, 1.154512e+001, -2.264086e+000, 2.165882e+001, 1.014028e+001, -3.516517e-001, -4.093801e+000, 2.351076e+000, -7.602097e+000, 7.139928e-001, -2.950168e+000, -6.432509e+000, 1.063147e+000, 4.025626e+000, -8.043078e+000, 3.135370e+000, -2.132955e+000, -7.156854e+000},

{8.946031e+000, -8.682889e+000, 4.560917e+001, 4.549869e+000, -1.352076e+001, -8.097821e+000, -1.877752e+001, 1.187971e+001, 2.236130e+001, -2.386158e+000, -7.173427e+000, 9.741701e+000, -2.068515e+001, -4.942789e+000, 1.078452e+001, -1.232191e+001, 3.227254e-002, -6.558535e+000, 3.292556e+000, 1.512416e+001, -1.837757e+001, 7.254817e+000, -2.215936e+000, 1.411027e+000, 1.660883e+001, -8.834739e-001, 9.114048e+000, 6.342240e-001, -2.028967e+001, -3.242350e+000, -5.327551e+000, 1.103044e+001, 3.009553e+000, -1.084661e+000, -7.466662e+000, 1.136157e+001, 5.649936e+000, 4.280579e-001, -1.719080e+001, 2.875402e-001, 1.439995e+001, -1.938861e+001, 6.518339e+000, 6.745290e+000, -2.101274e+000, 3.889227e+000, 1.515434e+000, 2.603742e+001, 7.252187e+000, 6.680488e+000, 5.578331e+000, 3.864011e+000, 3.057614e+000, 2.430980e+001, 9.301090e+000, 6.585790e-001, -6.116117e+000, -1.962338e+001, 7.014034e+000, 2.079807e+001, 8.375988e-002, 4.822584e-001, 7.446092e+000, -1.582745e+001, 3.911820e+000, 4.201224e+000, 3.100012e+000, 9.763644e+000, -2.982767e+000, -2.637446e+000, -1.696763e+001, 4.672959e+000, -9.172456e+000, -2.136565e+001, 8.039230e+000, -3.383603e+000, 1.221636e+000, 3.647537e+000, 7.029302e+000, -2.163306e-001, 4.246014e+000, 2.280243e+001, -1.334919e+001, -1.225542e+001, -2.227159e+001, -2.884783e+001, -6.122566e-001, -2.010717e+000, 2.199036e+001, -1.785464e+001, -1.774840e+001, -1.607127e+001, 7.901881e+000, -1.851395e+001, -2.701150e+000, 8.549331e+000, -2.222187e+000, -5.008575e+000, -1.412975e+001, -2.700649e+001, 2.505554e+001, -2.082731e+001, 5.253922e+000, 8.707030e+000, 3.141441e+001, 1.712262e+001, -4.849391e+000, -1.418261e+001, -5.993557e+000, -5.058015e+000, 6.577566e+000, 2.011946e+000, 1.621508e+001, 3.403874e+000, 2.481687e-002, 6.375801e+000, 4.253598e+000, 1.267252e+001, -2.231102e+001, -1.965469e+000, 1.039652e+001, 5.900468e+000, 1.978031e+000, -1.137173e+001, 5.316893e-001, 1.542007e+001, -1.461782e+000, -2.941871e+000, 6.807065e+000, 1.069799e+001, 3.212426e-001, -6.659563e+000, 5.827653e+000, 1.237776e+001, -5.120185e+000, 2.971370e+000, -9.251128e+000, -3.154248e+000, 4.701282e+000, -1.225197e+001, 8.366483e+000, 5.180942e+000, -2.905234e+000, -1.242781e+001, -1.023561e+001, 7.657488e+000, -3.917786e+000, 5.827433e+000, 1.361687e+001, -1.114892e-001, -3.662238e+000, -8.872987e+000, -1.569688e+001, -2.102250e+001, 1.858019e+001, -6.260797e+000, 4.939476e+000, 1.045089e+001, 1.890872e+001, -1.171162e+001, 1.985455e+000, -1.194223e+001, 2.790122e+001, -2.377970e+001, 2.289205e+001, 7.388734e-002, 3.986190e+001, 1.288540e+001, 5.733353e+000, 1.175331e+001, 1.921855e+001, 3.968466e+000, 7.534923e-001, 2.071217e+000, -9.349390e+000, 1.380108e+001, 1.753667e+000, -5.140930e+000, 9.311837e-001, -5.282977e+000, 1.590146e+001, -1.468667e+001, -3.293896e+000, -1.117859e+001, -1.510671e+001, 1.253906e+001, 1.091715e+001, 5.081992e+000, 1.529549e+001, 5.471577e+000, 5.327542e+000, -1.292860e+001, 1.841494e+001, -4.891063e+000, 8.953914e+000, -2.937608e+000, 6.866003e-001, -9.642571e+000, 1.749775e+001, -2.104993e+000, 1.537641e+001, 1.831864e+000, 5.491246e+000, -1.123446e+001, 4.894539e-001, 1.260588e+000, 1.313660e+001, 5.878163e+000, 2.129697e+000, -1.190974e+001, -2.687302e-001, 1.297895e+001, 2.435794e+000, -1.091912e+001, -2.517675e+000, -2.109986e+000, 5.866132e+000, -1.473617e+001, 2.584481e+000, -9.368391e+000, 4.068768e+000, -1.923349e+000, 4.382158e+000, 7.133104e+000, -2.609016e+000, -2.835727e+000, -2.952641e+000, 4.219020e+000, 1.159558e+001, 6.691502e+000, -1.596741e+001, -8.994754e+000, -3.568286e+000, -1.592150e+001, -

© ISO/IEC 2004 — All rights reserved


Copyright International Organization for Standardization
Provided by IHS under license with ISO
No reproduction or networking permitted without license from IHS
Not for Resale

1.001579e+001, 1.107707e+001, 1.587467e+001, 1.000547e+001, -1.272820e+000, 5.901721e+000, 1.581648e-001, 1.340707e+001, 8.764361e+000, 1.318669e+001, -9.663645e-001, 9.261804e+000, 1.292612e+001, -1.201035e+001, -2.515332e+000, -1.008638e+001, 6.618803e+000, -1.935543e+001, 1.218276e+001, -5.008542e-002, -1.977342e+000, -4.650338e+000, -1.511825e+000, -8.522173e+000, -5.295068e+000, -6.317805e-001, 1.112727e+000, 3.017042e+000, -3.814379e+000, 2.088102e+001, -9.353959e+000, -5.634801e+000, -1.896286e+000, -7.338310e+000, -6.547397e+000, 1.726706e+000, -1.123494e+001, 1.071234e+001, -1.114021e+001, 1.049758e+001, -2.885604e+000, -4.803032e+000, 1.443314e+000, 1.658087e+000, 4.470328e+000, 8.790495e+000, 6.356904e+000, -1.145428e+001, 1.028902e+001, 1.098335e+001, -1.369482e+001, 1.989154e+000, 6.547066e+000, -7.512170e-001, -4.473712e+000, -6.422511e+000, -1.489536e+001, -3.623981e+000, 9.417182e+000, 1.439933e+001, 1.524661e+001, -1.297584e+000, -5.598610e+000, -2.778716e+000, -1.561088e+000, 3.749252e+000, 7.380623e+000, -1.604461e+000, -2.759924e+000, 4.911119e+000, -6.566004e+000, 8.677941e-001, -1.369642e+001, 2.344512e+000, 8.081390e+000, -4.274622e+000, -8.805246e+000, -1.937143e+001, 6.865378e+000, 7.272679e+000, -2.650318e+001, -5.811143e+000, -9.314453e+000, 8.375967e+000, 1.166390e+001, -6.445467e+000, 4.217272e-001, -1.232988e+001, 1.957432e+001, -1.542032e+000, -3.615565e+000, -1.489532e+001, 3.516869e+000, -1.430010e+000, 8.593868e+000, -1.202605e+000, -8.035945e-001, 2.776178e+000, -2.085290e+000, -3.566553e+000, 5.114105e+000, 1.288021e+001, 6.603047e+000, -9.244455e+000, -1.426008e+000, 2.340114e+000, 9.070875e+000, 1.219329e+001, -7.981238e+000, 7.725753e+000, 8.198311e-001, -2.601444e+000, 1.045412e+000, -3.867310e-001, -1.313980e+001, 1.401171e+001},
{2.014783e+000, 1.233279e+001, -1.371877e+001, -1.958281e+001, -5.967615e+000, -1.479312e+001, 8.366950e-001, -7.358831e-003, -1.186415e+001, -1.480042e+001, -1.740814e+001, -2.787582e+000, 7.152445e+000, -5.237057e+000, -9.164837e+000, -1.096446e+000, 7.987833e-001, 8.575530e+000, -1.328179e+001, -3.118459e+001, 1.051391e+001, -5.640065e+000, -6.513848e+000, 1.652375e+001, 1.283658e+001, 5.571247e+000, -1.137001e+001, -1.542440e-002, -1.190600e+001, -1.044729e+001, 1.671923e+001, -5.948195e+000, -3.150669e-001, 1.382976e+000, 9.902748e+000, -2.238678e+001, 3.530895e+000, -2.697692e+000, -2.018401e+001, -9.222207e+000, -1.530000e+001, 3.394323e+000, 1.545402e+001, -1.598444e+001, -1.586073e+001, -2.844339e+000, 1.660326e+001, 1.590625e+001, -4.388536e+000, -7.530940e+000, -3.391353e+000, 1.394948e-001, -6.984172e+000, 2.831902e+000, 6.356613e+000, -2.314826e+000, -1.075283e+001, 1.655707e+000, 3.600294e+000, -6.953140e-001, -8.297268e+000, 3.377194e+000, 1.331914e+001, 1.610416e+001, 4.115205e+000, 1.454344e+001, 4.756447e+000, -3.336258e+000, 6.022097e+000, 5.174935e-001, 1.788526e+001, 4.509308e+000, 7.077914e+000, -1.252781e+001, -1.839580e-001, -9.333785e+000, -1.979374e+000, 3.579659e+000, -1.532477e+000, -1.257982e+001, -4.802990e+000, -8.466888e+000, -1.237723e+000, -6.802779e+000, 5.217363e+000, -3.575258e+000, -2.425459e+001, 2.671270e+001, 1.816264e+001, -2.348810e+001, -5.689499e+000, 2.068956e+001, 2.443308e+001, 5.243210e-001, 2.032796e-001, 1.026945e+001, 6.968602e+000, 2.141438e+001, 1.473624e+001, 5.405373e+001, -4.517589e+001, -2.156795e+001, -2.167763e+001, 9.745362e+000, -2.627445e+001, 2.159753e+000, -4.903405e+000, 8.940268e+000, -2.401828e+000, 1.482154e+000, -8.181949e+000, 7.353191e+000, 1.132599e+001, -2.645212e+000, -2.986256e+001, 1.121061e+001, 2.593627e+000, 1.817474e+001, 8.481061e+000, 2.405042e+000, -1.406815e+001, 1.092023e+001, 1.013145e+001, 4.822767e+000, 1.137554e+001, -2.671473e+000, 8.317644e+000, -1.142065e+001, -1.879277e+000, 8.195850e+000, -1.564671e+001, -7.350522e+000, 1.402846e+001, 2.730755e-001, 2.240937e-001, -1.108937e+001, -9.111106e+000, 1.253703e+001, -9.596840e+000, -1.642763e+001, -4.419305e+000, 3.453876e+000, 1.769019e+001, 1.103275e+000, 1.292394e+001, 4.138973e+000, -3.204246e+000, 5.605194e+000, 6.477776e+000, -3.361606e+000, -5.414324e+000, -2.425702e+001, 1.734994e+001, -3.182825e+001, 1.016461e+000, 1.894057e+001, 2.358690e+001, -1.144849e+001, 7.141553e+000, -4.703765e+000, -1.726983e+001, 3.921236e+000, -1.407367e+000, 2.415446e+000, 3.040005e+001, 2.184208e+001, 1.239461e+001, 4.437928e+000, 9.082406e+000, -5.753849e+000, -1.891022e+001, 2.361697e+001, -7.716759e-001, 8.333250e+000, -4.353771e-001, 1.143690e+000, 1.707711e+001, 1.179889e+001, -1.195725e+001, -1.319740e+000, -4.664858e+000, 1.922975e+000, -8.055085e+000, 1.193192e+000, -1.137674e+001, -2.193063e+000, -8.602718e+000, 8.151357e+000, -7.480162e+000, -9.195166e+000, 2.684673e+001, -1.134810e+001, -4.130006e+000, 1.175166e+001, 1.086400e+001, 7.718617e+000, -1.076458e+001, 1.228750e+001, 1.484801e+000, -1.458320e+000, 2.522712e+001, 1.530191e+001, -1.213006e+001, -8.556841e-001, 1.574367e+001, 2.318625e+001, 9.967734e+000, -1.414174e+001, -1.258091e+001, -1.068553e+001, 6.363613e-001, -2.231266e+001, 9.460453e+000, 3.211889e+000, -8.702488e-001, -3.464600e+000, -9.079714e-001, 6.618072e+000, 1.144384e+001, 4.861560e+000, -1.146244e+000, 5.185377e+000, -6.658516e+000, -1.741346e+001, -1.121584e+000, -3.119782e+000, 9.843158e+000, -6.380133e+000, 2.883672e+000, -2.169935e+000, -1.226154e+001, -1.693516e+001, -1.759162e+001, -9.011186e+000, 1.567801e+001, 9.782457e+000, 1.139417e+001, 1.540500e+001, 2.978832e+000,


© ISO/IEC 2004 — All rights reserved

Copyright International Organization for Standardization
Provided by IHS under license with ISO
No reproduction or networking permitted without license from IHS
Not for Resale

1.121736e+001, 6.573820e+000, -6.132400e+000, -2.063065e+001, -2.096469e+001, 8.850494e-001, 3.828132e+000, -1.562824e+001, -3.521185e+000, -1.125228e+001, 6.574231e+000, 9.668457e+000, -9.843179e+000, -4.154345e+000, 2.735537e+000, -1.011860e+001, 7.853126e+000, -7.374373e+000, -2.858340e+000, 1.345671e+001, 2.222991e+000, -3.156659e+000, -5.413829e+000, -8.220304e+000, 4.054634e+000, 1.395367e+000, 2.643478e+000, -1.115526e+001, 9.141421e-001, -7.500292e+000, -1.841857e+001, -1.911126e+001, -1.185512e+001, -3.349434e+000, 1.041738e+001, 1.065658e+001, 6.849038e+000, 1.411702e+000, -7.958293e-001, 4.765080e-001, -7.503909e+000, -5.535415e+000, 1.835669e+001, 3.321628e+000, 1.001817e+001, -5.950899e+000, 3.346038e+000, 6.725792e+000, -5.347280e+000, 1.573413e+001, -1.769587e+001, -5.191768e+000, -6.988425e+000, -3.391163e+000, 3.713077e+000, -1.115461e+000, -8.766423e+000, -1.044685e+001, 9.856676e-001, 1.401237e+000, -2.055088e+000, -4.617424e-001, -3.123672e-002, 4.172717e+000, -3.390893e+000, 1.239903e+001, -6.531167e+000, 3.407871e+000, -5.523365e+000, 5.811871e+000, -8.869169e+000, 2.870349e-001, 6.834424e+000, -1.274582e+000, -1.739691e+001, 9.189912e-001, 7.653391e-001, 1.724581e+001, 7.952412e-002, 5.439039e+000, -9.306459e+000, 5.937891e+000, 5.568433e+000, -2.303425e+000, -1.399476e+001, -4.607505e+000, 8.075550e+000, -7.265390e+000, -2.488893e+000, 2.029442e+000, -5.516466e+000, -5.980708e+000, 4.896971e+000, 2.691043e-001, 2.698079e-002, -4.758075e+000, -2.074132e+000, -1.649409e+000, -5.176547e+000, -7.958767e+000, -2.424296e+000, -4.081997e+000, 4.445860e-001, -1.614423e+000, 3.929120e+000, -6.203589e+000, 7.256827e-001, 1.219401e+001, -4.249920e+000, -8.216792e-001, -6.145338e+000},
{-3.265732e+000, 3.172393e+000, -2.142771e+001, -7.935712e+000, -4.845960e+000, -1.128880e+000, 1.744535e+001, -1.057182e+001, 8.845833e-001, -6.592861e+000, -2.251112e+000, 2.521075e+001, 2.532829e+001, -3.322110e-001, -1.350640e+001, 5.491198e+000, -1.063567e+001, 1.050249e+001, 1.056966e+001, -2.047766e+001, 1.493682e+001, 3.663995e+000, -1.247022e+000, -3.082771e+000, 1.579298e+001, 1.691598e+001, 1.887505e+000, -2.122457e+001, 1.501404e+001, -1.688733e+001, -2.170133e+001, 1.890171e-001, 1.487243e+000, -2.438275e-001, 1.076556e+001, 2.116100e+001, -3.276234e+000, -5.039855e+000, 1.561442e+001, -1.477031e+001, 2.630636e+000, 2.168111e+001, 1.178707e+000, -9.765268e+000, -8.417072e-002, -5.060460e+000, -3.779810e+000, 3.184825e+000, 6.640935e+000, -6.601874e+000, 4.585354e+000, 3.314494e+000, 6.662159e+000, -1.760425e+001, 4.855286e+000, 7.529673e+000, -8.549644e+000, 7.563478e+000, -8.495895e+000, 2.443731e+000, -3.840774e-001, -6.174362e+000, -4.479160e+000, 1.454418e+001, -5.820922e+000, -5.224624e+000, -2.318627e+000, -6.916323e+000, -1.587329e+001, -1.510687e+000, -2.004613e+000, -5.160669e+000, -3.597885e+000, -1.111934e+001, -9.292616e+000, 1.128779e+001, 2.361484e+001, 4.986397e+000, 2.617885e+000, 6.582147e+000, -6.360446e-004, -6.863859e+000, -9.002063e+000, 5.015820e+000, -2.445187e+001, 4.385198e-002, -8.477060e+000, 8.565271e+000, -9.261931e+000, 4.905300e+001, 1.946656e+000, 5.130449e+001, -1.826058e+001, 1.390023e+001, -2.073034e+001, -2.846145e+000, -2.610399e+001, 1.493857e+000, 5.123949e+000, 2.901382e+001, 9.507479e+000, 2.048511e+000, -3.900822e+001, -1.349676e+001, 1.074282e+001, -1.598711e+001, 5.009998e+000, -2.395547e+000, -9.591264e+000, 2.557641e+001, 2.061198e+001, 1.054499e+001, -9.960988e+000, -4.275090e+000, 2.728825e+001, 3.785550e+000, -1.978581e+001, -2.750448e+000, 1.459843e+001, -8.923971e+000, 9.439493e-001, 2.309978e+001, -1.415900e+001, -8.434229e+000, -8.272101e+000, 1.206103e+001, -7.391849e+000, -1.242161e+000, -5.300482e+000, -1.038177e+001, -1.110386e+001, -1.556159e+001, -5.984146e+000, 6.309480e+000, -1.231814e+001, -2.058562e+000, -8.058033e+000, -8.683014e+000, 3.982995e+000, 1.443946e+000, -2.280066e+000, 1.267002e+000, 7.747055e+000, -1.421051e+000, -7.658945e+000, 8.460275e+000, 3.919588e+000, -2.428043e+000, 7.640283e+000, 1.352108e-001, -2.867345e+001, 2.818580e+000, 1.323503e+001, 2.531316e+000, -3.388629e+000, -1.536070e+000, 2.678767e+001, 2.739435e+001, -8.848953e+000, 3.179387e+000, 3.268424e+001, -2.586909e+000, 1.153462e+001, 1.340488e+001, -2.864422e+001, 2.155068e-001, 9.466922e+000, -5.704232e+000, -7.585334e-003, -1.307587e+001, 6.656552e+000, -1.703125e+001, 8.077646e+000, -1.436654e+001, -2.437057e+001, 9.534101e+000, 3.547231e+000, -6.015218e+000, 1.835974e+001, 7.361533e+000, 1.529996e+001, -8.175828e+000, -1.620227e-001, -1.757161e+000, 4.280549e+000, -3.415121e+000, -2.209158e+001, 2.318132e+001, -9.731013e+000, 8.292560e+000, 1.005199e+001, -1.355370e+001, 1.120045e+001, -1.729765e+000, 1.580829e+000, 8.723052e+000, -6.613549e+000, 4.236971e-001, 8.213039e+000, -3.174117e+000, -1.075722e+001, -3.047735e+000, -1.757722e+000, 2.631152e+001, 6.255309e+000, 1.136831e+000, -4.030745e+000, -6.929428e-001, 8.782056e+000, 4.707036e+000, 3.677344e+000, 1.712138e+000, 1.754310e+000, 1.991481e+000, -6.693043e+000, 2.021274e-001, 1.374307e+001, -3.554568e+000, 6.029204e+000, 3.602179e+000, -2.807016e+000, 7.688721e-001, -1.637011e+000, 5.073959e+000, 3.377294e+000, 6.926799e-001, -1.388786e+000, 1.572378e+001, 1.395578e+001, -5.565601e+000, -2.301382e+000, -1.831269e+001, 7.495355e+000, -1.562575e+001, -1.518951e+001, -2.393271e+000, 1.661927e+000, 9.872152e-001, 1.008021e+001, 1.957343e+001, 9.146585e-001, -8.168139e+000, 3.312715e+001, -1.263166e+001, -

© ISO/IEC 2004 — All rights reserved


Copyright International Organization for Standardization
Provided by IHS under license with ISO
No reproduction or networking permitted without license from IHS
Not for Resale

6.231266e+000, 1.741319e+001, 1.786678e+000, 3.243639e+000, -1.314976e+001, 7.241620e+000, -1.398560e+001, 2.324941e+001, -8.659798e-001, 1.186506e+001, -7.670639e+000, 3.130607e+000, -4.199617e+000, -7.069029e+000, -7.142914e+000, 6.502197e+000, -1.593633e+001, 4.387694e+000, 1.294842e+001, -1.502486e+000, 8.059962e+000, 7.102455e+000, -2.954291e+000, -6.513867e+000, -9.721387e+000, -4.986989e+000, -1.756635e+001, -3.619755e+000, -2.767774e+000, 1.429943e+001, 1.723961e+001, -1.750927e+001, 1.577587e+001, 5.544874e+000, 8.374935e+000, -1.589942e+001, 5.289889e+000, -5.367681e+000, 6.045185e+000, -5.422933e+000, 1.433478e+000, 3.953023e+000, -1.686583e+001, 6.483075e+000, 5.499378e+000, 1.287523e+000, 1.041979e+001, 5.083046e+000, -8.717084e+000, 4.577877e+000, 1.063734e+001, 1.895189e+000, -1.115051e+001, 4.424059e+000, -1.020636e+000, -7.646794e+000, -8.905667e+000, 2.745054e-001, -1.278629e+001, 3.006382e+000, -5.939700e+000, -4.872164e+000, -6.188039e+000, 5.134061e+000, 1.829676e+000, -8.894160e+000, -1.981888e+001, -4.573314e+000, 1.007468e+001, 8.790177e+000, 7.659422e+000, 7.986916e+000, -1.162354e+001, 1.067644e+001, -4.633376e+000, 1.623621e+001, 9.186005e-001, 1.641638e+000, 1.880161e+000, -1.486245e+001, 1.441216e+001, 1.513121e+001, -1.716058e+000, 2.953808e+000, 1.965263e+001, -3.520266e+000, 7.823365e+000, -3.033181e+000, 4.093428e+000, -6.942909e+000, -8.914389e+000, -4.254471e+000, 4.749858e+000, 1.159749e+000, 9.036148e+000, 4.550360e+000, 5.443477e+000, 1.220576e+000, 6.097205e+000, 1.520756e+000, -1.588282e+000, 1.046299e+001, 3.955617e+000, 7.979500e+000, -2.905713e+000, -3.156596e+000},

{1.240666e+001, 8.787264e+000, -3.184971e+001, -1.894013e+001, 8.643971e+000, 1.255476e+001, -2.423993e+000, -1.666650e+001, -9.021064e+000, -9.297313e+000, 4.366290e+000, 1.866390e+001, 3.744484e+000, 3.172271e+000, 1.218165e+001, -1.421887e+001, -3.460978e+001, 1.818229e+001, 1.550201e+001, 2.385114e+001, -3.749609e+000, -5.844756e+000, 1.867630e+001, -2.185342e+000, 1.449412e+001, -9.717093e+000, 1.192517e+001, 6.209525e+000, -1.480863e+001, -5.835474e+000, -6.515926e+000, 1.505741e+000, 1.502834e+001, -1.660967e+001, 1.322179e+001, 1.137188e+001, -6.032758e+000, 8.207223e+000, -5.390061e+000, 3.539142e+000, -1.566146e+000, -1.178605e+001, 2.396525e+000, 3.499688e+000, 1.755959e+001, 1.438122e+000, 1.144709e+001, -1.125152e+001, -8.930923e+000, 8.712216e+000, -1.002548e+001, 2.466228e+000, 4.832901e+000, -1.824967e+001, 7.313370e+000, -6.493020e+000, -5.510096e-001, 1.688394e+001, -1.484855e+001, -2.376244e+000, -1.174718e+001, 8.199989e+000, -9.137189e+000, 8.588257e+000, 9.957731e+000, 1.650334e+000, -1.742825e+000, 4.034372e+000, -2.019295e-001, -4.326603e+000, -4.468255e+000, -1.567211e+001, 8.422531e+000, 2.996248e+000, 1.033416e+001, -4.636559e+000, -8.914694e+000, -2.632551e-001, 1.207646e+001, -3.244930e+000, -1.998760e+001, -4.110090e+000, 1.631205e+001, -9.229243e+000, 2.094416e+000, 7.331026e+000, 9.022792e+000, -3.847915e+000, 1.756970e+001, -2.775560e+000, 3.075538e+001, -2.965561e+001, 5.920485e+000, -2.581025e+001, -1.537686e+001, -2.382164e+001, 4.617690e+001, 2.009250e+001, -6.910680e+000, 1.041536e+001, -7.308949e-001, 1.457238e+001, -1.168767e+001, -1.508550e+001, 1.309690e+001, -9.000750e+000, 7.278851e+000, 9.839610e+000, -1.453905e+001, -7.714411e+000, 1.070006e+001, 9.031478e+000, -2.437719e+001, 6.878204e+000, 1.825296e+001, 1.882523e+001, -7.007812e+000, -7.217780e+000, 2.620082e+001, -1.057135e+000, -3.955812e+000, 5.211027e-001, -1.784574e+001, 7.673907e-002, 1.204974e+000, -1.878666e+001, -1.706417e+001, -2.827334e+000, -6.854517e+000, -4.035946e+000, -1.783516e+001, -2.776011e+000, -8.912690e+000, -6.177951e+000, 2.063751e+000, 3.940517e-002, -4.789547e+000, -2.724301e+000, 8.063625e+000, -1.438969e+001, 5.627550e+000, -1.083625e+000, -3.644326e+000, 4.664178e+000, -3.366541e+000, 2.681825e-001, 2.086436e+000, -8.431474e+000, -6.555031e+000, 5.036592e+000, -2.198483e+001, 9.778202e+000, 2.469399e+001, -1.178341e+001, -3.032600e+001, -4.924418e+000, -5.458587e-001, -1.256239e+001, -1.840231e+001, -2.302080e+001, -2.015412e+001, 1.445069e+001, -2.407975e+001, 2.071192e+000, -1.505409e+001, -1.897287e+001, 2.686680e+001, -1.394266e+001, 2.193601e+000, -2.836648e+001, -3.887122e+000, 2.225007e+000, 3.465867e+000, 5.950033e+000, -8.322172e+000, -1.084635e+001, 2.459987e+001, -1.748387e+001, -8.189168e+000, -1.333514e+000, -1.785090e+000, -1.525992e+001, 6.411883e+000, -4.322552e+000, -5.140261e+000, -1.281625e+000, -3.434767e+000, -1.005996e+001, -1.063769e+001, -7.280461e+000, -1.850682e+001, -1.867274e+000, -2.857558e+001, 9.807471e+000, -1.317417e+001, 1.553628e+000, -7.014153e+000, 5.671144e-001, -9.223019e+000, 3.295107e+001, -2.484099e+001, -1.590403e+001, 1.216108e+001, 5.372577e-001, -2.830228e+000, 4.890269e+000, -3.490402e+000, 6.575840e+000, 2.003577e+001, 2.556290e+001, -9.491842e+000, 5.965734e+000, -5.987697e+000, -1.223918e+001, 8.219412e+000, 7.054268e+000, -5.882036e+000, -1.777832e+000, 9.006541e+000, 1.165154e+001, 6.292686e+000, 3.558640e-001, -5.956510e+000, -4.836070e+000, -1.296643e+000, -5.012939e+000, -2.485208e+000, 4.298145e+000, -4.534962e+000, 9.479075e+000, -3.563267e+000, 7.485619e+000, 4.660613e+000, -1.019640e+001, -1.150816e+000, -1.903218e+001, 2.714561e+001, -1.020032e+001, -7.429536e+000, -


© ISO/IEC 2004 — All rights reserved

--`,,```,,,,````-`-`,,`,,`,`,,`---

Copyright International Organization for Standardization
Provided by IHS under license with ISO
No reproduction or networking permitted without license from IHS
Not for Resale

4.422149e+000, -1.065259e+000, -6.645396e-001, -4.634879e+000, -2.806088e+000, -1.267280e+001, 4.466674e+000, 8.430268e+000, 1.980834e+001, -6.178097e+000, 2.631540e+000, -7.880219e+000, -5.360715e+000, -2.748025e+000, 1.746648e+001, -5.368885e+000, -1.287939e+001, 7.949611e+000, 7.480423e+000, -2.662839e-001, -4.881884e+000, -1.359000e+001, 5.914261e+000, 3.270357e+000, -6.401745e+000, -3.504474e+000, -8.426407e+000, -3.471604e+000, -5.928876e+000, -8.108644e+000, 9.451243e+000, -6.848855e+000, -8.652480e+000, 2.830621e+000, -1.791766e+000, -5.465828e+000, -1.366813e+001, -9.954837e-001, -1.907693e+001, 6.770345e+000, 6.652633e+000, 6.651090e+000, -8.663717e+000, 4.786050e+000, 1.526394e+001, 8.732377e+000, -4.782311e-001, -8.417590e+000, -3.446518e+000, 4.726418e+000, 3.032079e+000, -1.631720e+000, -1.223596e+001, -1.083868e+000, 9.800248e-001, 1.205160e+001, 1.134132e+001, -3.853900e+000, -5.527913e-001, 6.384808e-001, -6.173121e+000, -1.968317e+000, 1.040163e+001, 1.297525e+001, -9.582736e+000, 1.027684e+001, 2.975021e+000, 4.537863e-001, 1.477517e+000, 3.794630e-001, 3.858443e+000, 3.997369e+000, 1.977165e+001, 1.272506e+001, 1.623329e+000, 2.138925e+000, -2.393782e+000, 8.119715e+000, 1.416532e+001, 1.878081e+000, 6.741240e+000, -1.831910e+000, -1.067752e+000, -1.762297e+001, 2.061909e+000, -5.104060e+000, 3.925595e+000, -1.238822e+000, -1.144253e+001, -3.924039e+000, 6.182994e+000, 9.164285e+000, -4.057456e+000, 1.307650e+001, 1.351890e+001, -9.813786e+000, 2.770777e+000, 7.236465e+000, 1.515874e+000, 2.998373e+000, 2.991510e+000, 5.582709e+000, -3.270867e+000, 7.509185e-001, -5.059874e+000, -3.126125e-001, 1.100410e+001, -4.466024e+000, 7.379770e+000, 9.760561e+000, 1.825401e+000},
{-1.871656e+001, -1.063321e+000, -1.238592e+001, 1.226789e+001, -7.993324e+000, -9.911487e+000, 5.759386e+000, 2.086360e+001, -7.011269e+000, -4.696887e+000, -1.680154e+001, -7.202346e+000, 1.982522e+001, 2.529740e+001, 3.322170e+000, -3.955346e+000, 1.517757e+001, 4.455134e+000, -1.443157e+001, -1.758764e+000, 1.669854e+001, 1.167065e+001, -6.003656e+000, 4.972918e+000, 7.904353e+000, 9.550938e+000, -3.126922e+000, 1.211785e+001, 5.020163e-001, 4.930389e+000, 2.255508e+001, 2.838698e+000, 2.122883e-001, -6.129896e+000, -1.423766e+000, 5.039570e+000, 8.218758e+000, -8.829446e+000, -1.057215e+001, 3.502796e+000, -4.563420e+000, 1.768674e+000, 7.401168e+000, -5.416453e+000, -1.090462e+001, -1.562411e+000, -2.655825e+000, -6.491546e+000, -1.973916e+000, -1.518515e+001, 1.234373e+001, 5.154671e+000, -3.689274e+000, -1.166503e+000, -4.604452e+000, 1.472637e+000, -2.370743e+001, 6.089236e+000, 3.109410e+000, 6.117835e+000, 4.915881e-001, -7.673717e-001, -2.048793e+000, -8.510859e+000, 3.492970e+000, -8.341869e+000, 5.150598e-001, -1.019408e+001, -1.215902e+001, -4.543448e+000, -1.541021e-001, -1.945411e+001, 6.637075e-001, 5.034733e+000, 2.795161e+001, 5.910952e-001, 1.266017e+001, -3.065261e+000, 4.389883e-001, -3.289445e+000, 9.579771e-001, 1.383784e+001, 5.199398e+000, 8.691308e+000, 4.789204e+000, -1.416574e+001, 3.036842e+001, 1.822524e+001, 1.564005e+001, -1.236621e+000, 1.879603e+000, 1.270657e+001, 1.319827e+000, -4.058738e+001, 2.058617e+001, 1.387121e+001, -5.367778e+001, -8.323181e+000, -3.555753e+000, -3.577833e+000, -4.530058e+000, 2.035715e+001, 2.304709e+001, -5.643572e+001, -6.972144e+000, -2.051738e+001, 3.886604e+000, 1.326817e+001, -8.395333e+000, -1.502104e+001, -2.695164e+001, -1.008994e+001, 2.143299e+001, -3.858339e+000, -1.142764e+001, 2.003253e+001, 2.400428e+000, -5.074794e+000, 6.161356e-001, -2.916442e+001, -1.246283e+001, -8.723975e+000, -1.281090e+001, -2.251423e+001, -1.545603e+001, -6.568058e+000, 8.449833e+000, 4.144802e+000, 3.027504e+000, -4.524917e-002, 1.023490e+000, 6.147687e+000, -5.493440e+000, -1.614588e+000, 4.756318e+000, 8.388943e+000, -8.802203e+000, -6.846769e+000, 1.645525e+000, -5.531386e+000, 9.585816e-001, 8.050572e+000, 7.699691e-001, 7.148794e+000, -1.027110e+001, 9.014344e-001, 9.162910e+000, 6.671791e-001, 9.531900e+000, 1.129439e+001, -7.109812e+000, -1.081876e+001, -2.106656e+001, -4.309905e+000, 2.239553e+001, -2.032124e+001, 2.356896e+001, 6.054329e+000, 2.124514e+001, 8.493921e+000, 1.120033e+001, 5.787917e-001, 2.467418e+001, 1.004970e+001, -1.957056e+001, 4.758603e+000, 5.134528e+000, -4.180830e+000, 2.077952e+001, -5.499007e-001, 1.649761e+001, 5.496695e+000, 2.334700e+001, -4.619375e+000, 9.761866e+000, -5.018542e+000, -1.847776e+001, -5.943675e-001, -5.529769e+000, -1.947428e+000, 5.307694e+000, 1.407653e+001, 9.404389e+000, -9.994751e+000, 1.255903e+001, -3.096159e+000, 4.620566e+000, -3.599787e-001, -1.095235e+001, -8.531314e+000, 2.021302e+001, -1.497298e+001, 1.382871e+001, 1.326944e+001, 1.842923e+001, -1.035193e+001, -3.879443e+000, 6.008505e+000, 7.132323e+000, 2.778572e+000, -4.583823e-001, 1.466361e+001, -8.786653e-001, 1.740149e+001, 7.351219e-001, 9.093046e+000, 2.700155e+000, -1.097213e+001, -1.899096e+001, -1.846158e+001, 1.300672e+001, -1.060166e+001, 5.152311e+000, 5.288384e+000, -4.204553e+000, -1.190571e+001, 1.043821e+001, -6.709604e+000, 1.022371e+000, -2.634571e+001, -5.660500e-001, 6.704585e+000, -7.577747e+000, 2.335564e+000, 5.448151e+000, -9.848559e+000, 5.956336e+000, -1.595332e+000, -1.132313e+000, 1.623314e+000, -5.772226e+000, -1.971114e+001, -5.174003e+000, -1.798040e+001, 9.043153e+000, 1.947654e+001, -8.011197e+000, 9.018384e+000, 4.724416e+000, 1.842288e+001, -6.498976e+000, -3.314417e+000, 1.265837e+001, -2.996087e+000, 1.187984e+001, 1.433581e+000, 1.589790e+000, -

© ISO/IEC 2004 — All rights reserved


Copyright International Organization for Standardization
Provided by IHS under license with ISO
No reproduction or networking permitted without license from IHS
Not for Resale

8.556522e+000, -1.687091e+001, 1.284906e+001, 4.425502e+000, -1.936992e+001, 4.275409e+000, -5.180829e+000,
2.204159e+000, -1.197823e-001, 2.022290e+001, -9.915013e+000, -1.435761e+000, 2.828018e-001, 2.636914e+000, 1.667899e+000,
1.403102e+001, -1.056229e+001, 3.163634e+000, -2.150629e+000, -1.977862e+001, 2.947199e+000, 7.144903e+000, -
1.437018e+001, -3.044919e+001, -3.120293e+001, -1.308417e+001, 1.905424e+001, 1.374347e+001, -1.249141e-001,
9.614656e+000, 1.435436e+001, 4.367327e+000, -1.390356e+001, 7.376926e+000, -7.154953e+000, -9.709172e+000, -
5.177138e+000, 2.985029e+000, 2.247237e+000, -4.591255e+000, -8.195647e+000, 8.609888e+000, -4.154344e+000,
1.488779e+001, 2.116735e+000, 2.955795e+000, 7.706593e+000, 2.247045e+000, -6.410124e+000, -1.481760e+001, 1.474408e+001,
9.713445e+000, -1.990627e+000, -2.458653e+000, -1.019244e+000, -1.505084e+001, 1.463222e+000, 1.674237e+000, -
5.621281e+000, 3.917434e+000, -3.180283e+000, -5.999218e+000, -7.481649e+000, -1.539416e+001, 3.156001e+000, -
6.803148e+000, -3.159502e+000, -4.138363e+000, -1.442641e+000, 5.171098e+000, 6.494946e+000, 1.305135e+001,
1.093638e+001, -9.591473e+000, 2.474904e+000, 1.182232e+001, -7.626473e+000, 4.391977e-001, 1.219195e+001, -1.265206e+001,
-1.515911e+000, 5.436570e+000, -1.049787e+001, 5.482982e+000, 3.905681e+000, -7.003469e+000, -1.405578e+001,
4.003730e+000, -2.409903e+000, 6.297493e+000, 2.889406e+000, -2.378172e-002, -2.545731e+000, 9.125342e-001, 3.997930e+000,
2.285411e+000, -3.641194e+000, -8.849571e+000, -3.404095e+000, 1.792298e+001, -1.503851e+000, -1.133422e+001,
4.803851e+000},
{5.286432e+000, -3.227983e+001, 1.107660e+001, 2.446931e+001, -5.485450e+000, -1.645381e+000, -1.259415e+000,
5.241978e+000, -2.663200e+001, -1.518688e+001, -2.341029e+001, 1.153793e+000, 5.606996e+000, -7.928593e+000, -
1.268459e+001, 1.466995e+000, -1.924410e+001, -1.074605e+001, -1.637863e+001, 1.068988e+001, -1.180257e+000,
4.048299e+000, 1.002153e+001, 1.834178e+000, 1.621920e+001, -7.599036e+000, 3.997237e+000, -5.940849e+000, 4.627614e+000,
-9.812088e+000, -1.484048e+001, 7.707468e+000, 7.585193e+000, 2.677836e-001, -1.387079e+001, 1.760117e-001, -7.707353e+000,
-1.676215e+001, 1.015990e+001, -1.222865e+001, -2.604309e+000, 9.975114e+000, 1.357226e+001, 3.610251e-001, -
1.048159e+001, 1.497763e+000, 5.343448e-001, 1.606608e+001, 1.623356e+000, -1.096957e+000, -5.736676e+000, -8.681636e+000,
4.981960e-002, 2.168328e+000, 7.697697e+000, -7.697503e+000, 8.083030e+000, 1.714999e+000, 2.864296e+000, 4.209493e+000, -
9.054452e+000, 3.287896e+000, 1.176249e+001, -2.822438e+000, -1.445719e+001, -7.396388e+000, 1.894195e+001,
1.472866e+001, -1.390512e+001, 7.919615e+000, -1.163415e+001, 1.156349e+001, -5.124582e-001, 4.240336e+000, 1.646333e+000,
-9.008689e+000, 1.274661e+001, 1.997612e+001, -7.085786e+000, -4.754349e+000, -2.737067e+001, 1.720391e+001,
6.587461e+000, -6.214906e+000, -5.393279e+000, 1.704718e+000, 1.473285e+001, -1.490695e+001, -2.367428e+001, -
3.425512e+001, -1.718735e+001, 1.065141e+001, -1.672783e+001, -7.310986e+000, -9.838386e+000, 1.485547e+000, -
5.790515e+000, -3.117387e+001, 2.351601e+001, 1.800734e+000, -3.831504e-001, 8.105442e+000, 2.207108e+000, -4.926968e+000,
3.008422e+000, 7.121000e+000, -3.296576e+001, 1.256988e+001, 1.890618e+001, 1.978106e+001, 3.370758e+001, -6.843885e+000,
-2.042689e+001, 2.144903e+001, -5.746264e+000, -1.326363e+001, -1.979065e+001, -3.494798e+000, -2.019380e+001,
1.384749e+001, -7.580040e+000, -6.479317e+000, -2.495973e+001, 1.088190e+001, 2.185025e+001, -8.096557e-001,
1.784372e+001, 1.332880e+001, -3.747534e+000, -6.803959e+000, -9.165901e+000, 1.378722e+000, 1.431326e+001,
1.755502e+000, -3.712272e+000, -2.927851e+000, 3.208173e-001, 1.325168e+001, -7.165165e+000, 4.601138e+000, 5.648119e+000,
-1.769081e+000, 1.126542e+001, -1.265803e+001, -1.207938e+001, 5.393985e+000, 8.350042e+000, 2.453993e+000,
1.020154e+001, 5.882931e+000, 3.086963e+001, 1.860801e+001, -8.179607e+000, 2.464440e+001, -2.307313e+001, 1.405760e+001,
-3.282567e+001, 8.091259e+000, -7.109486e+000, 6.225497e+000, 3.723601e+000, 8.444543e+000, 1.095764e+001, -
1.897726e+001, -7.872179e+000, 4.876568e+000, 1.217002e+001, 2.022899e+001, -1.051229e+001, -3.813304e+000,
1.187009e+001, 1.698736e+001, -1.822410e+001, -1.787384e+001, 4.803782e+000, -1.033537e+001, 1.126607e+001, -6.129461e-
001, -1.179429e+001, -2.548797e+000, -1.916245e+000, -2.626939e+001, -1.072282e+001, 8.546945e+000, -1.217241e+001,
5.152956e+000, -7.152854e+000, 2.122105e+001, 2.577363e+001, 4.132732e+000, 1.721825e+000, 5.589574e+000, -2.368350e+001,
-1.829490e+001, 1.432228e+001, 7.451662e+000, 4.562467e+000, 2.052664e+001, -6.689179e+000, -6.540983e+000, 7.261003e-001,
-1.871304e+000, -1.196718e+001, 4.423401e+000, 1.049451e+001, -1.667818e+001, -5.672118e+000, 5.595451e+000,
2.774667e+001, 3.270250e+000, -6.882264e+000, 1.690247e+001, 8.680867e+000, -2.331971e+000, 1.358525e+001, 2.820593e+000,
7.253315e+000, -5.614021e+000, 1.824410e+000, 6.380475e+000, -9.848487e+000, -1.335934e+001, 3.930431e+000, -7.985480e-
001, -5.900350e+000, 1.069092e+000, -9.401492e+000, 1.004617e+001, 2.243288e+000, -6.736754e+000, -5.146257e+000,
4.447957e+000, 4.524150e+000, 1.820690e+001, 6.519474e+000, -1.069541e+001, 1.107595e+001, -2.330307e+001, 7.635416e+000,
-1.117517e+001, -1.123099e+001, -6.342605e+000, -1.002208e+001, 1.279201e+001, -6.402034e+000, 1.114721e+001, -


© ISO/IEC 2004 — All rights reserved

Copyright International Organization for Standardization
Provided by IHS under license with ISO
No reproduction or networking permitted without license from IHS
Not for Resale

4.217619e+000, 7.499805e+000, -3.039862e-001, 2.335647e+000, 6.688779e+000, -7.187181e+000, -4.475814e+000, 7.752422e+000, -4.043744e+000, -7.244419e+000, -4.732642e+000, 1.543116e+000, 1.109183e+001, -1.229096e+001, 1.400861e+001, -1.106924e+001, 9.322115e+000, -8.699054e+000, 5.764586e+000, 5.246511e+000, 2.823595e+000, 3.385063e+000, 1.606349e-001, -2.239044e+000, 1.806040e-001, 1.047627e-001, 4.783145e+000, 9.097848e+000, -6.750015e+000, 1.525140e+001, -9.771167e+000, -9.348539e-001, -1.592245e+001, 1.701667e+001, -6.413670e+000, -3.654371e+000, -7.177760e+000, 1.115147e+001, 1.179600e+001, -6.778421e+000, -1.070759e+001, 8.420127e+000, 8.062942e+000, -2.368719e+000, -1.341149e+000, 1.265411e+001, 1.102008e+000, -9.318414e-001, -5.712883e+000, 8.709293e+000, 1.228074e+001, -8.167944e+000, -9.870539e+000, -7.740572e+000, 3.613087e+000, 5.513902e+000, -8.560547e+000, -5.806891e+000, 6.362511e+000, -5.489233e-001, -5.884942e+000, -5.473889e+000, 3.133941e+000, -2.852678e+000, 1.183427e+001, -5.776204e+000, 2.278958e+000, 1.347428e+001, 1.183092e+000, -3.126508e+001, 1.665672e+001, -8.177966e+000, 3.385169e+000, -1.074887e+000, 7.217934e+000, -1.237689e+001, -8.283795e+000, -1.042237e+001, 4.495814e+000, -1.415423e+001, 5.326891e-001, 4.142270e+000, 4.211045e+000, 5.537214e+000, 8.726834e+000, -7.734043e+000, 2.098009e+000, 2.255423e+000, -6.391700e+000, -2.419608e+000, 3.868233e+000, 4.846657e+000, 8.931950e+000, 4.905914e-001, 1.743808e+001, -4.328522e+000, -1.493955e+000, -1.116158e+000, 1.052916e+001, 8.550466e+000, -9.273022e+000, 1.247946e+000, 8.245811e+000, 2.121537e+000},
{-2.283439e+001, -1.022683e+001, 1.254106e+000, -1.415957e+001, 1.028735e+001, -4.057983e-001, -1.196252e+001, 7.087763e+000, 1.024103e+001, 9.656617e+000, 8.224658e+000, -1.192386e+000, 7.010149e+000, -1.080978e-001, -1.244802e+001, -4.692177e+000, 1.858941e+001, -9.504715e+000, 3.407121e+000, -1.241425e+001, 2.359332e+001, 5.611668e+000, 1.104118e+001, -5.286307e+000, -2.352747e+001, -3.467710e+000, 1.806857e+000, 1.554611e+000, 1.432122e+001, 3.882599e+000, 4.816932e+000, -7.007321e+000, -1.274435e+000, 3.879429e+000, 5.859412e+000, -1.700921e+000, 8.315051e+000, -3.629012e+000, -6.923260e-001, 7.192509e+000, -1.491598e+001, 3.044826e+000, 2.540532e+000, 1.498376e+000, -4.291770e+000, 1.534666e-001, -3.117145e+000, -5.200291e+000, 1.205375e+001, -9.846813e+000, -7.215179e+000, -1.294041e+000, -1.096470e+001, -1.810157e+001, 1.279926e+000, -3.837319e+000, 4.134513e+000, -1.752384e-002, 6.194369e+000, 2.726801e+000, 5.628960e+000, 8.908010e+000, -1.736718e+000, -1.232983e-001, 9.762542e-001, -3.851343e+000, -4.974354e+000, -3.447479e+000, 1.151268e+001, 4.567798e+000, 1.756981e+001, -8.783453e+000, 3.186432e+000, 4.030100e+000, -2.771608e+001, -1.336884e+001, -1.086389e+001, -9.088305e+000, -9.030051e-001, -6.932565e+000, -2.384205e+000, 2.074686e+001, 5.242700e+000, 4.213223e+000, -3.019041e+001, 9.051709e+000, -1.084176e+000, 2.072842e+001, -1.092939e+001, 1.104038e+001, 7.799295e+000, -5.385323e+000, 6.822168e-001, 9.238584e+000, 2.379020e+001, -5.003673e+000, -1.674519e+001, -2.728385e+001, -1.717854e+001, -1.662646e+001, -8.157852e+000, 8.261890e+000, -1.626845e+001, -3.123553e+001, 3.081225e+000, 5.036369e+000, 4.012310e+001, 1.398871e+000, -1.274541e+001, 1.721178e+001, -4.006606e+000, 5.942816e+000, -1.415324e+001, 2.775017e+001, 3.574228e+000, -3.481395e+000, 2.697676e+001, 3.519186e+000, -1.709650e+001, -1.072889e+001, -4.007799e+000, 3.847521e+000, -6.924722e+000, 3.622822e+001, -5.870011e+000, -2.346081e+000, -1.473913e+001, -5.840467e+000, 8.839307e+000, -2.765194e+000, -8.268459e+000, 4.100948e+000, 2.281790e+001, 1.239622e+001, -5.975392e+000, -3.636727e+000, -1.101342e+001, -6.822067e-001, 1.110528e+001, 2.490084e-001, -9.967777e+000, -8.402285e+000, 1.919366e+000, -8.423972e+000, 8.727790e+000, 3.277479e+000, -1.937677e+000, 7.041138e+000, -8.214108e+000, -6.494148e-001, 3.919564e+000, 1.090093e+001, 2.205754e+001, -9.686892e+000, -1.152929e+001, -4.471517e+000, 1.567970e+001, 5.403675e+000, 3.361543e+000, 1.053423e+001, -9.463158e-001, 4.151226e+000, 9.607346e+000, 1.892066e+001, 1.014225e+001, -1.002816e+001, -1.307078e+001, 2.235129e+001, -3.139677e+001, -1.388812e+001, -1.307525e+001, 1.157367e+001, -3.858097e+000, -3.185712e-001, -2.511763e+000, -8.575604e+000, 2.046374e+001, 1.597183e+001, 3.406121e-001, -2.203769e+001, -9.638553e+000, -4.399728e+000, 1.615826e+001, 4.726644e+000, -1.577247e+001, 7.850352e+000, 4.229479e+000, -1.481302e+001, 8.174654e+000, -4.062668e+000, -5.170171e+000, 8.080941e+000, -1.382608e+001, 8.025633e+000, -1.235352e+001, 8.745267e+000, -8.310143e+000, -9.504452e+000, -7.985765e+000, 2.866325e+000, -2.529654e+001, -1.286148e+001, -4.545162e+000, 8.872364e+000, 1.155032e+001, 3.976073e+000, -5.233994e+000, 5.355279e+000, -7.985386e+000, -6.168271e-001, -1.058171e+001, 4.214032e-001, 2.416527e+000, -8.760250e+000, -1.484061e+000, 4.193521e+000, -1.341048e+001, 4.323652e+000, -1.324040e+001, 2.117221e+000, 1.437750e+000, -3.700450e+000, 5.429476e+000, 5.654851e-001, -2.074445e+000, 1.162130e+001, -4.363670e+000, -2.953325e+000, -2.128146e+001, -5.585633e+000, 1.451929e+001, -1.060413e+001, -1.016244e+001, 1.218594e+001, 1.465728e+000, -9.933158e-001, -2.038221e+001, 2.343939e+001, 6.966010e+000, 4.703052e+000, 4.181762e+000, -2.180104e+000, -4.896996e+000, -3.619752e+000, -8.453694e+000, -2.791176e+001, 3.356336e-001, -1.425238e+001, 4.709157e+000, -

© ISO/IEC 2004 – All rights reserved


Copyright International Organization for Standardization
Provided by IHS under license with ISO
No reproduction or networking permitted without license from IHS
Not for Resale

9.835461e+000, 8.006768e+000, -6.214917e+000, 1.325903e+001, -9.470541e+000, 6.285809e+000, 1.520343e+001, -1.177007e+001, -1.255219e+001, 1.583539e+001, 3.691960e+000, -7.152947e+000, 4.368064e+000, -4.122516e+000, 9.209259e+000, 1.330021e+001, 5.405151e+000, -8.732436e+000, 6.233639e+000, -1.913382e+000, 1.634035e+001, 5.194900e+000, 1.381303e+001, -2.062885e-001, -9.557000e+000, 6.868826e-001, -6.444344e+000, 2.345221e+001, -2.123985e+001, 4.963565e+000, -6.289751e+000, 4.118796e+000, 2.667205e+000, 8.488824e+000, -6.657182e+000, -2.641827e+000, -1.252152e+001, -2.963525e+000, -5.238985e+000, -2.088320e+000, 1.140604e+001, -7.703422e+000, 4.990583e+000, -7.312548e+000, 1.232317e+001, 9.479467e+000, 4.600430e-001, 8.290474e+000, -1.259255e+000, -2.175523e+000, -4.712931e+000, -9.668123e+000, -3.072940e+000, 8.387938e+000, 1.111272e+000, -2.310669e+000, 1.491270e+001, -6.572589e+000, 5.030326e+000, 5.191186e-001, 1.146851e+000, 1.057396e+000, 1.926099e+001, -1.341854e+000, 4.195588e+000, -6.288827e+000, 8.965514e+000, -5.130876e-001, 9.832320e+000, -8.481553e+000, 8.430606e+000, 3.039257e+000, -1.131584e+001, 8.620246e+000, -7.681085e+000, 5.052386e-001, 1.957388e+000, 1.116886e+001, -8.854486e+000, -7.202872e+000, 5.046656e+000, -1.520192e-001, 5.146443e-001, 7.438870e+000, -8.369366e+000, -1.231440e+001, -1.345341e+001, -8.702910e-001, -7.127198e+000, -1.212253e+001, 9.411289e+000, -2.325895e-001, 8.670935e-001, 1.317305e+001, 8.470959e+000, 9.420678e+000, 3.089747e+000, -1.144304e+000, 6.992914e+000, -1.702792e+000, -8.297473e-002},

{-7.683165e-001, 4.220161e+000, -8.024662e-001, -3.718390e+000, -5.222581e+000, -7.113597e+000, 1.872171e+000, 2.685553e+001, -1.056863e+001, 1.064424e+001, -3.491858e+000, -9.434761e+000, 3.366788e-001, -8.309395e+000, -1.832250e+001, 5.903214e+000, -3.195711e+000, 1.738149e+001, 6.738997e+000, -9.731145e+000, -1.451537e+001, 1.010931e+000, -1.360131e+001, 1.043445e+001, 2.782853e+001, -1.382244e+001, -2.042557e+001, -1.221220e+001, -8.533386e-001, -6.200675e+000, -1.978511e+000, -4.601551e+000, 2.355881e+001, 1.789536e+001, -1.499819e+001, 7.645784e+000, -8.780231e+000, -7.695636e+000, 9.492366e+000, -9.857942e+000, 4.678211e+000, -5.590152e+000, 1.224400e+000, -2.265508e+000, -5.558653e+000, 8.461602e-002, 4.361803e+000, 9.399928e+000, 1.141620e+001, -2.607531e-001, -9.853616e+000, 1.413652e+001, 3.735929e+000, -2.399714e+000, 1.287308e+001, -4.003659e+000, -1.494973e+001, 1.402765e+001, 2.325579e-001, 5.764729e+000, 9.360192e+000, 2.085544e-001, 1.444042e+001, 1.052510e+001, -9.989086e-001, 2.712982e+000, 1.254745e+001, -2.985447e-002, -1.194704e+001, 4.987508e-001, -8.265200e+000, -3.348313e+000, 4.759054e+000, -1.392201e+001, -9.376168e+000, 6.062946e+000, 3.607661e+000, 2.138345e+000, 2.672970e+000, 1.953519e+001, 2.811547e+000, 2.514292e+001, 6.172163e+000, 8.930686e+000, -7.530184e+000, 1.038819e+001, 8.911374e+000, -8.360449e+000, 1.374705e+001, -2.863657e+001, -3.012720e+001, -4.250492e+000, 3.533281e+001, 1.000607e+001, -2.169307e+001, 3.335040e+000, 7.185365e+000, -3.728923e+001, -3.047402e+001, 1.089646e+001, 1.062423e+001, -6.156869e+000, 7.076113e+000, 1.744413e+001, -1.495923e+001, -1.425908e+001, -2.010386e+001, 6.052955e+000, -1.441521e+001, 2.697615e+001, 1.718305e+001, 1.254014e+001, 1.074379e+001, 2.895628e+000, -1.381254e+001, -8.188256e+000, 6.519992e+000, -1.795367e+001, 7.856253e+000, 1.030353e+001, -1.471449e+001, -9.941790e+000, -2.020752e+000, 3.532163e+000, -1.883997e+000, -8.234833e+000, -1.419315e+000, 8.236164e+000, -1.273636e+001, -1.206466e+001, -1.218430e+001, 6.015232e+000, 4.145054e-001, -6.282702e+000, -7.173264e-001, -1.316889e+001, -1.499153e+001, -1.790698e+001, -2.151835e+000, -8.067818e+000, 1.611350e+001, 7.105726e+000, -1.218615e+001, 6.684475e+000, -4.542035e+000, 1.038809e+001, -8.188195e+000, -1.603059e+000, 5.719229e+000, 4.242154e+000, -1.174537e+001, -8.207567e+000, 1.525009e+001, -2.094740e+001, -3.662082e+000, 5.638629e+000, -2.251581e+001, 1.309604e+001, -8.264629e+000, -4.600014e+000, -5.766772e+000, 8.449830e+000, -3.956343e+001, 1.195682e+001, -4.094817e+001, -2.393280e+001, -1.647188e+001, 2.091241e+001, -2.059694e+001, -2.108396e+001, 3.097474e+001, -1.125718e+001, 1.616495e+000, -1.919965e+001, -3.255324e+000, -9.562045e-001, -1.271020e+001, -1.163875e+000, -1.593715e+001, -7.845264e+000, 1.499195e+000, -6.230466e+000, -1.480109e+001, -7.936936e+000, 5.728020e+000, 1.291728e+000, 1.502448e+001, 1.600055e+001, -9.670391e+000, -5.323676e+000, 1.126299e+000, 2.567895e+000, -4.696724e+000, 3.154714e+000, 1.709658e+000, 1.044352e+001, 1.038085e+001, -4.673940e+000, -1.251934e+001, 1.464648e+000, -1.428467e+001, -1.780056e+001, 1.202592e+000, -2.441647e+000, -1.225010e+001, -5.146634e+000, -1.044400e+001, 8.585631e+000, -2.162787e+001, 1.273125e+001, 1.434948e+001, 4.659409e+000, 9.110972e+000, 1.767039e+001, 4.210450e-001, 5.245269e+000, 1.074569e+001, 1.285788e+001, 2.055906e+000, 4.901937e+000, 1.089299e+001, -8.380875e-001, 4.909453e+000, -8.570625e+000, 6.411330e+000, 6.176706e+000, 1.217879e+000, -7.054990e+000, -8.093347e-001, -2.117727e+000, 2.938856e+000, -2.286954e+001, -1.996419e+001, 1.287419e+001, -1.367134e+001, -4.528105e+001, -6.480640e-001, -1.585578e+000, -5.248940e+000, 4.417979e-001, 1.659075e+000, -4.553196e+000, -5.324610e+000, -9.091871e+000, -2.140512e+001, -


© ISO/IEC 2004 — All rights reserved

Copyright International Organization for Standardization
Provided by IHS under license with ISO
No reproduction or networking permitted without license from IHS
Not for Resale

9.746640e+000, -1.255387e+001, -2.063065e+001, 2.572148e+000, 6.410671e+000, -3.659988e+000, 6.661708e+000, -1.977526e+001, -7.177204e+000, 1.167212e+001, 7.948536e+000, 8.340944e+000, -1.446380e+000, 6.396890e+000, -9.141491e+000, -2.513288e+000, 2.573964e+000, -4.496846e+000, -1.371382e+001, 9.716150e-001, 1.538070e+000, -1.300232e+001, 8.004215e+000, 2.244553e+000, 1.237802e+001, -1.655421e+001, 4.951530e+000, -1.001240e+000, 2.146443e+000, 3.678052e-001, 5.731736e+000, -9.010917e+000, 1.135873e+001, -7.163179e+000, 5.584644e-001, -1.159672e+001, 1.013364e+001, -8.540077e-002, -1.290833e+001, 5.373547e+000, -1.098144e+001, 5.660934e+000, -7.577890e+000, 1.193860e+001, -3.724090e+000, 3.727582e+000, -1.172474e+000, 2.067440e+001, -5.961285e+000, -1.058509e+001, -3.340044e+000, 1.712967e+000, 2.939405e+000, -8.030433e+000, -2.537904e+000, 9.009101e+000, -4.347383e+000, 2.497316e+000, 6.041070e-001, -3.236414e+000, -6.329635e+000, 9.108141e+000, 2.338282e+000, -8.173923e-001, -7.252667e+000, 5.639861e+000, 2.384887e+001, 7.629332e+000, 1.572384e+001, 4.352441e+000, -7.900056e+000, 5.581771e+000, -8.856331e+000, -7.897723e+000, -6.863582e+000, -8.429681e+000, 1.957440e+001, -1.039406e+001, 5.239979e+000, 2.187334e-001, -9.498003e+000, -2.391572e+000, 9.207293e+000, -5.143272e+000, 1.415813e+001, 6.603809e-001, -8.976313e+000, 1.502653e+001, 1.364673e+001, 1.809123e+000, 4.895742e+000, -2.035110e+001, 8.960216e+000, 2.022252e+000, 3.993788e+000, -3.821458e+000, -1.938853e+000, -2.985307e-001, -1.759043e+000, 3.787741e+000, 2.089037e-001, 5.217103e+000, -2.349626e+000, 2.728804e-002, 5.444995e+000},

{1.503234e+001, -2.007614e+001, -1.081657e+001, 1.383556e+001, -7.546516e+000, -7.304721e+000, 1.061888e+001, 2.625550e+000, -2.054883e+001, 1.638961e+001, -1.166786e+001, 1.787019e+000, 1.642163e+000, 1.512902e+000, 1.997685e-001, -2.828700e+000, 1.701281e+001, -3.989779e+000, 7.488418e+000, 7.134731e+000, 1.031186e+000, 4.315352e+000, 4.586918e+000, 1.858531e+001, -2.355108e+000, -2.813285e-001, -9.705516e+000, 6.673914e+000, -1.242980e+001, 4.737681e+000, 9.611097e+000, 1.498976e+001, 1.849753e+000, -8.876234e+000, 2.960579e+000, -4.647262e+000, -7.763166e+000, 9.689664e+000, -8.692453e+000, 2.934477e+000, -7.111537e+000, 1.142501e+001, -2.471671e+000, 1.192931e-001, -3.328409e+000, -9.573224e+000, -3.172952e+000, -1.222000e+000, 4.520041e+000, -5.721750e+000, 5.113450e+000, -4.659669e+000, -8.020206e+000, 1.134117e+001, -4.090262e-001, -5.342047e+000, -1.359267e+001, -1.662674e+001, 9.903548e-001, 1.731411e+001, -9.818230e+000, -6.219490e+000, -5.054580e+000, 5.015078e+000, -1.511855e+001, 2.257389e-001, 9.298573e-001, 2.811685e+000, -3.744832e+000, 9.309398e+000, 2.687423e+000, -6.323262e+000, 1.294366e+001, 7.125651e+000, -1.468571e+001, 1.159735e+001, 5.874936e+000, -2.868025e+000, -6.498329e+000, 3.984647e+000, -1.508426e+001, 2.112783e+001, -3.048946e+000, 1.803346e+001, 2.009687e+001, 2.174273e+001, -1.791600e+001, -8.612305e-001, 9.408199e+000, -7.065538e+000, -7.301221e+000, 1.292244e+001, 5.636567e-001, -2.185500e+001, 2.420955e+001, 1.318451e+001, 3.818845e+001, -4.642032e+000, -1.183138e+001, -1.814131e+001, 2.234293e+001, -2.688229e+001, -2.465430e+001, -2.434675e+001, 7.134818e+000, -1.803254e+001, -1.604547e+001, -1.521032e+000, 1.195900e+001, -1.967446e+001, -1.174526e+001, -1.647224e+001, -1.503491e+000, -6.333323e+000, 1.966877e+001, 1.122428e+001, 2.556691e+000, -2.611279e+001, -8.940169e+000, 7.223519e+000, -5.422724e+000, 1.006579e+001, -1.352862e+000, -1.969028e+001, -2.014021e+001, -1.635567e+001, 4.615094e+000, 5.748146e+000, 2.118709e+001, -1.460657e+001, -1.124802e+001, -4.369998e+000, -1.296562e+001, 3.680371e-001, -6.053590e+000, 3.986072e+000, 1.694281e+001, 1.247862e+001, -2.470706e+000, -3.515562e+000, 8.383530e+000, 2.352375e+000, 1.568118e+000, -4.111222e+000, 3.681789e+000, -7.625466e-001, 9.930915e-001, 1.423786e+001, 6.237682e+000, 1.295127e+001, -7.412263e+000, -1.643959e+001, 1.868265e+001, 3.841984e+000, 1.718389e+001, -4.564258e+000, 2.120569e+000, -5.421527e+000, -4.234196e+000, 1.495269e+001, 2.076431e+001, 6.567401e+000, 4.935195e+000, 2.865105e+000, 1.032915e+001, 7.734038e+000, -1.344757e+001, -3.973601e+000, 1.785682e+001, 2.177900e+001, 1.540963e+001, 3.197493e+001, -1.548653e+001, 5.311926e+000, -2.167681e+001, 1.685771e+000, 1.168730e+001, -3.222357e+000, -1.060009e+001, 7.795629e+000, 2.836935e+001, 1.495011e+001, 5.030084e+000, -8.663827e+000, -1.349974e+001, -8.194682e+000, 7.826258e+000, -2.363284e+000, 1.010610e+001, -4.866185e+000, -4.312701e-001, -1.643972e+001, 6.205824e+000, 2.319538e+000, 8.184289e+000, -1.035175e+000, 9.192688e+000, 1.049803e+001, 1.219729e+001, -7.490704e+000, 8.935503e+000, 1.381834e+001, -5.773442e-001, 8.446241e+000, 5.051564e+000, -4.725714e+000, 8.143784e+000, -3.828689e+000, -9.541087e-001, 8.829432e+000, -9.290333e+000, 7.122528e+000, 5.619841e+000, 5.008761e+000, 1.083364e+000, -2.813915e+000, 2.370892e+001, -2.117907e+000, -1.010053e+000, -1.949801e+001, 1.415483e+001, -1.868959e+000, 1.516446e+000, 1.100115e+000, -4.732579e-002, 6.321808e-001, -1.701847e+000, -3.790394e+000, 1.923530e+001, 1.681961e+001, -1.307768e+001, -5.210059e+000, -7.118702e+000, 2.737597e+000, 3.331206e+000, 1.028192e+001, -3.894497e+000, -1.555931e+001, 1.530232e+001, 1.247350e+001, -5.148044e+000, 1.002429e+001, 1.280794e+001, -7.128639e+000, -6.758556e+000,

© ISO/IEC 2004 — All rights reserved


Copyright International Organization for Standardization
Provided by IHS under license with ISO
No reproduction or networking permitted without license from IHS
Not for Resale

8.376456e+000, 9.008249e+000, 4.073128e+000, -1.879065e+001, 3.204328e+000, 4.148824e+000, 8.057450e+000, 1.273355e+001, 1.001619e+000, -3.919408e+000, -5.924671e+000, -4.040061e+000, -1.292002e+001, -1.012039e+000, -6.500452e+000, -6.899806e+000, 1.222057e+000, 7.189461e+000, 1.001674e+001, 1.179855e+000, 4.822964e+000, 6.208772e+000, 7.891234e+000, -1.924897e-001, -5.284061e+000, 1.183349e+001, 1.589071e+000, -3.714036e+000, 7.467901e+000, 9.745094e+000, -7.771604e+000, -1.714273e+001, -3.329289e+000, 7.256447e+000, -9.066296e+000, -3.251379e-001, 1.685822e+000, 7.537649e-001, 1.534364e+001, -9.572454e+000, 1.642444e+001, -3.067105e-001, 4.797479e+000, 1.394094e+001, -6.903318e+000, 8.449839e+000, -1.344070e+001, -6.431449e+000, 7.896823e+000, -6.551467e+000, -6.074147e+000, 3.827061e+000, -6.197802e+000, 1.334614e+001, -1.231226e+000, 6.265522e+000, 1.939571e+000, -1.458328e+001, -6.974878e-002, -6.246231e+000, -1.095414e+001, 7.842554e+000, 7.197817e-002, 2.467381e+000, -2.149263e-001, 2.270573e+000, -1.293158e+001, -8.636601e+000, -1.323058e+001, 1.685086e+001, -1.832272e+001, 2.131081e+000, -3.414577e+000, 1.038369e+000, -2.787321e+000, -1.979236e-001, -1.124111e+001, 2.906492e+000, 8.341506e-002, -1.640843e+000, 2.015347e+001, -8.074648e+000, -3.836293e-001, 7.339257e+000, -1.772357e+001, -1.231994e+001, -1.488833e+001, -1.352048e+001, 8.510058e-002, 6.578521e+000, -1.094192e+001, -1.840143e-001, -3.206924e+000, -2.908496e+000, -8.098176e-001, -6.957805e+000, -9.377723e-002, -1.420896e+001, -2.292204e+000, -6.420688e+000, -6.809117e+000, -5.262317e+000, -3.211645e+000, 7.555615e+000, -3.220829e+000},

{2.491144e+001, -2.958793e+001, 2.139141e+001, 8.607234e+000, 1.791988e+001, 6.225199e+000, 1.161764e+001, -2.138523e+001, -1.342897e+001, 4.217322e+000, 6.355335e+000, 9.735723e+000, 5.638367e+000, 1.320464e+001, 3.023884e-001, 4.581132e+000, -6.270354e+000, -6.349811e+000, -1.214871e+001, 6.990016e+000, -1.738314e+001, 1.459820e+001, 8.466473e+000, -1.320683e+001, -1.573187e+001, -9.838298e+000, 4.688933e+000, -3.478324e+000, -1.166955e+001, 5.124650e+000, -6.815967e+000, 7.440421e+000, 1.515124e+001, -1.036267e+001, -1.589886e+000, 4.343648e+000, -1.160482e+001, -8.957732e+000, -2.702387e+001, 1.541320e+001, 1.109685e+000, -1.023935e+001, -5.332601e+000, -1.042400e+001, 2.941738e+000, 4.532907e+000, -2.254604e+000, -9.446116e+000, 6.534694e+000, -1.027955e+001, -1.170267e+001, -1.141412e+001, 9.480809e-001, 7.197958e+000, 6.333553e+000, 6.748936e+000, 8.833616e+000, 1.271045e+001, -2.921537e+000, -8.319500e+000, 5.266606e+000, -2.231923e+000, -2.696307e+000, 2.650005e+000, 1.858000e+000, 7.754348e+000, 3.383961e+000, 1.024136e+001, 7.527088e+000, 6.973459e+000, -4.433525e+000, 8.030869e+000, 6.213617e+000, 1.120247e+000, -1.250922e+001, 1.007314e+001, -1.360994e+001, -8.046578e+000, 9.708360e+000, 7.262615e+000, 1.515824e+001, 2.676316e+000, 2.248560e+000, -2.259851e+001, -3.804266e+000, -1.347273e+001, -1.335025e+001, 1.260055e+001, 1.630669e+001, 4.314621e+001, -2.094060e+001, -2.245014e+001, 3.982683e+001, 1.303063e+001, -1.255754e+000, -2.102567e+001, -1.468698e+001, -2.401777e+001, 1.347567e+001, 1.501235e+001, -3.780474e+000, -1.019872e+001, -1.075717e+000, -1.398792e+001, 6.373121e+000, -2.410633e+001, 3.365325e+001, -9.555635e+000, 1.093523e+001, 1.512756e+001, -5.013908e-001, -2.188030e+001, -4.079180e+001, -1.784718e+001, -2.061875e+001, -5.894402e+000, -1.814671e+001, 1.011839e+001, 2.993558e+001, -3.734638e+000, -1.217888e+000, -2.320490e+001, 1.399353e+001, -2.680603e+001, 1.837938e+000, 5.848987e-001, 1.318606e+001, 1.093946e+001, 7.924771e-001, -3.624593e+000, 1.712035e+001, 1.998568e+000, 9.082770e+000, 5.522260e+000, 1.226482e+001, -2.269120e+000, 2.713065e+001, 1.327656e+000, -2.561383e+000, 2.120062e-001, 6.899152e+000, -5.946262e+000, -4.786982e+000, -1.347173e+001, -7.517735e+000, 1.143172e+000, 4.920455e+000, -5.282136e+000, -5.576109e+000, 1.418720e+001, 2.447588e+001, 1.810622e+001, -1.909322e+001, 1.442720e+001, 2.809059e+000, 2.939966e-001, -3.620734e+001, 2.925038e+000, 4.368864e+000, 1.050895e+001, 5.576607e+000, 1.557563e+001, 8.431411e+000, 8.015506e+000, -1.785736e+001, 2.551512e+001, 3.303072e+000, -1.145647e+001, -8.787877e+000, 1.626027e+001, -1.201776e+001, 2.013325e+000, 1.440502e+001, -2.119136e+001, -2.001347e+001, -1.771665e+001, 2.521567e+001, 1.558884e+000, 1.828611e+001, 1.697685e+001, -1.922829e+001, 1.230705e+001, -5.397950e+000, -1.681210e+001, -9.334246e+000, 1.536327e+000, 1.968905e+001, 1.722367e+001, 1.417838e+001, 7.580138e+000, 4.894895e+000, 6.209263e+000, 1.229185e+001, -1.215874e+001, 2.214643e+001, -1.636581e+001, 1.336379e+000, 1.082166e+001, 1.938485e+000, -1.077312e+001, 6.121178e+000, -2.987375e+000, 1.162177e+001, -3.334514e+000, -9.114472e+000, -1.261384e+001, -2.896843e+000, 6.548925e+000, 5.014531e+000, -1.311057e+001, 1.686966e-001, 2.474487e-001, -2.874708e+000, -3.287811e+000, 9.127991e+000, -1.188330e+001, 3.084020e+000, 3.641276e+000, -5.205201e+000, -3.681541e+000, 4.749962e+000, -1.159089e+001, 3.864143e+000, -1.131869e+000, 4.128751e+000, 8.188796e+000, -5.351258e-001, 4.523023e+000, -8.033639e-001, -1.519592e+001, -9.325332e+000, 1.776117e+001, -6.645827e-001, 8.159724e+000, 5.116223e+000, -1.921753e+001, -5.385557e+000, -1.942849e+001, 1.783548e+001, 1.497586e+001, -1.989031e+001, 4.146504e+000, 1.291493e+001, -


© ISO/IEC 2004 — All rights reserved

Copyright International Organization for Standardization
Provided by IHS under license with ISO
No reproduction or networking permitted without license from IHS
Not for Resale

8.541695e+000, 1.388592e+001, -6.092984e+000, 6.074423e+000, -1.187306e+001, 1.148552e+001, 9.695677e+000, 1.197335e+000, 1.685333e+001, -1.476970e+001, -6.566626e+000, 2.030671e+001, 5.546172e+000, 1.807070e+001, -6.756853e-001, -8.644130e+000, -1.641418e+000, 3.620898e+000, -1.236753e+000, -3.228357e+000, -5.043907e+000, 1.071314e+000, -1.680362e+000, 4.229962e+000, 1.493400e+001, 2.035298e+001, -2.839017e-001, 9.251580e+000, 1.112916e+001, -1.065422e+001, -3.663965e+000, -4.439821e-001, -6.218181e+000, -3.076500e+001, 7.196090e+000, -7.823821e+000, -8.081661e+000, -6.564376e+000, -2.620024e-001, 1.312088e+001, -8.274951e+000, -3.414044e+000, -4.901232e+000, -9.684200e+000, -9.686853e-001, 1.092251e+001, 1.110138e+001, 2.776558e+000, -7.149833e+000, 4.576179e+000, -4.831754e+000, 7.677928e+000, -1.560964e+001, -7.542321e+000, 5.954141e+000, -1.056984e+001, 1.067814e+001, 9.503417e+000, -3.062322e+000, -4.674601e+000, -2.795875e-001, -4.405626e+000, -1.309393e+001, 5.974713e+000, 8.206511e+000, 7.867301e-001, -1.195674e+000, 1.781302e+001, -4.638052e+000, 8.870531e-001, 1.310258e+001, -1.197350e+001, -7.853506e+000, -8.972956e+000, -7.843899e+000, -5.206953e+000, -6.138484e+000, -7.494084e+000, -2.278644e+000, -8.891889e+000, 7.829132e+000, 1.357205e+001, -9.159559e+000, 1.210618e+001, -2.967913e+000, 3.617447e+000, -1.619226e+000, 9.506249e-002, -3.273795e+000, 4.995208e+000, 8.290310e+000, -2.725231e-001, 4.592167e+000, -1.422536e+001, -5.708632e+000, 4.703380e+000, -1.102047e+001, -2.432207e+000, -6.583287e-001, -7.351127e+000, -7.750966e+000, -3.962400e+000, -1.539521e+001, -1.074268e+001, -3.255344e+000, -3.729483e+000, 2.259264e+000},
{4.526223e+000, -1.813143e+001, 2.837771e+000, 1.219693e+001, -3.656267e+000, -5.351488e+000, -6.920726e+000, 1.337993e-001, 1.232677e+001, -7.564560e+000, 2.018318e+001, 2.125648e+001, -7.382364e+000, -1.360656e+000, -1.404214e+001, 1.260039e+000, 2.406775e+001, 1.348140e+001, -9.394355e+000, 5.712053e+000, -7.407236e+000, -7.974283e+000, 7.036772e+000, 9.389854e+000, -1.845584e+001, -1.308971e+001, 9.671961e+000, -3.192248e-001, -1.808613e+000, -1.979282e+001, 5.524710e+000, -8.339993e+000, 8.321208e+000, 4.018711e+000, -4.944929e+000, 1.317912e+001, 1.523428e+001, 3.335188e+000, 4.696845e-001, 1.705706e+001, 1.903199e+000, -2.726245e+000, 6.600610e+000, 1.746937e+001, -2.569566e+000, -3.130855e+000, -1.346896e+001, 8.907785e+000, 3.847024e+000, 8.634320e+000, -1.350287e+001, 4.173984e+000, -8.555089e+000, 4.751062e+000, 8.035411e+000, -6.918664e+000, 1.482480e+000, -6.536078e+000, 1.400532e+000, -3.307379e+000, -7.397616e+000, 1.004996e+001, -2.873094e+000, -1.157100e+001, -1.091435e+001, -1.979754e-001, -2.609518e+000, -6.782255e+000, 9.929637e+000, -9.035611e+000, 1.054792e+001, -1.503448e+001, 1.446839e+001, 5.293095e-001, -1.990764e+000, 5.541306e+000, 8.444104e+000, -1.328736e+001, 1.088147e+001, -1.730696e+001, 1.096309e+001, 8.250747e+000, -1.036188e+001, 1.353843e+001, -3.804249e+000, 5.326631e+000, 1.130419e+001, 1.321518e+001, -2.179697e+001, -2.111885e+000, -2.063040e+001, -1.096739e+001, 1.039432e+001, 1.560038e-001, 4.176149e+000, 2.361616e+001, -2.563031e+001, 2.614524e+001, 1.384182e+000, -1.815952e+001, -1.852727e+001, -2.181166e+001, -5.643195e+000, 1.430884e+001, -1.698450e+001, -1.100018e+001, -2.935080e+001, -2.056330e+000, -1.801930e+001, 4.860861e+000, -1.918503e+000, -9.237342e+000, 6.270232e+000, 4.709259e+001, 2.546452e+001, -1.563721e+001, -1.892240e+001, 2.052037e+001, 1.238217e+001, 5.605415e+000, -9.823672e+000, -6.274336e+000, -4.539638e+001, -3.795299e+000, -2.154506e+001, -1.328931e-001, 6.151471e+000, -5.888823e+000, -2.704627e+000, -9.769402e+000, 1.408157e+001, -1.445892e+001, 5.727832e+000, 2.115694e-001, -1.067854e+001, -1.249386e+000, 9.541628e+000, 6.176905e+000, 1.332350e+001, 4.427750e+000, 8.604095e+000, 1.144494e+001, -1.725961e+001, -1.266584e+001, -1.691169e+001, -3.850525e+000, 9.078513e-001, -3.169026e+000, -3.196996e+000, -4.843815e+000, -2.668283e+001, 2.893365e+001, -3.424577e+000, -5.474524e+000, -2.779202e+000, -5.067036e+000, -1.336097e+001, 5.126203e+000, -4.791675e+000, -3.500943e+000, 7.880332e+000, 1.182089e+000, 1.984193e+000, 6.923306e+000, -2.239821e+001, 6.947573e+000, 7.550553e+000, 1.625809e+001, -1.503048e+001, 2.208658e-001, -2.083759e+000, 2.023585e+001, 2.029505e+001, 2.602987e+001, -8.808779e+000, 7.897039e+000, 8.405016e+000, -9.153220e+000, 3.255727e+001, -3.362282e+000, -4.741324e+000, -1.895147e+001, -9.511944e+000, -1.683426e+001, -8.203075e+000, 7.850754e+000, -2.016575e+001, -2.003005e+000, 1.025189e+001, 2.383958e+001, -3.557485e+000, 1.271334e+001, 1.544781e+001, -5.589023e+000, -1.390536e+001, -1.421631e+001, -3.820215e+000, -3.225839e-001, 1.348789e+001, 1.805266e+000, -1.619796e+001, -2.250438e+001, 2.602374e+000, 4.907540e+000, 1.150404e+001, -3.400526e+000, 1.373361e+000, -6.566405e-001, -6.581940e+000, 1.002023e+001, 5.571023e+000, 6.454010e+000, 5.538034e-001, -1.004943e+001, 1.916064e+001, -1.213826e+000, -2.380054e+001, -6.863307e+000, 1.447516e+001, 2.096397e+001, -1.155896e+001, 6.200442e+000, 1.276287e+001, 2.446894e+001, 4.634107e+000, 3.905931e+000, 1.187129e+001, -2.203303e+000, -1.300105e+001, 9.452141e+000, 2.800184e+001, -7.156981e+000, -2.046118e+001, 2.097969e+000, -3.317410e+000, -7.756142e+000, -8.422523e+000, -1.172354e+000, -8.606737e-002, 6.617000e+000, -8.008567e+000, -1.012425e+001,

© ISO/IEC 2004 — All rights reserved


Copyright International Organization for Standardization
Provided by IHS under license with ISO
No reproduction or networking permitted without license from IHS
Not for Resale

2.322603e+001, -1.349975e+001, 1.617409e+001, 1.120871e+000, -1.559625e-001, 7.050187e+000, -2.496153e+000, -1.180973e+001, 1.449308e+001, 5.336465e+000, -1.467122e+001, -1.091561e+001, -1.028703e+001, 8.921525e+000, 2.812237e+000, -3.821580e+000, -4.713728e+000, -1.133461e+001, 1.893330e+001, 6.138434e+000, 3.273776e-001, 1.330430e+001, -1.395100e+001, -1.231096e+001, 6.903117e+000, -9.471916e-001, -9.384655e-001, 8.940282e+000, 7.908004e+000, 3.288943e+000, 3.642381e+000, -5.132365e-001, -7.994552e+000, -1.000425e+001, -1.187414e+001, 8.452707e+000, -6.153895e+000, 1.243467e+001, 1.529239e+001, -6.512350e+000, -1.842461e+001, -7.673683e+000, -6.885482e-001, -7.035044e+000, 1.135784e+001, 1.769410e+001, 3.295096e+000, 4.425484e+000, 4.501576e+000, -1.324471e+001, -1.130283e-001, -1.293335e+001, 1.271013e+001, 5.471230e+000, -8.436037e+000, 1.059802e+000, -4.061623e+000, -3.469964e+000, 4.373539e+000, 6.061122e-001, -5.407234e+000, -2.515367e+000, -5.462152e+000, 2.302995e+000, -7.271264e+000, -2.742801e+000, 3.683031e-003, 8.757088e+000, 2.741646e+000, -1.714819e+000, -8.461438e+000, 8.846178e+000, -1.451460e+001, -5.555267e+000, -6.219349e+000, -8.124476e+000, 7.317660e+000, 4.321902e+000, 7.721364e+000, -1.809232e+001, 3.118810e+000, -6.255261e+000, 1.422580e+001, -7.072220e+000, 5.046907e+000, 5.975103e+000, 2.833653e+000, -1.551079e+001, 1.210108e+000, 9.528799e+000, -6.371098e+000, -2.546144e+000, -5.004593e+000, 3.021425e+000, -6.008685e-001, -8.911057e+000, -5.637967e+000, 6.165639e+000, 5.560672e+000, -3.003887e-001, -1.126431e+001, 1.262042e+001, 1.840532e+000, -1.922819e+001, -1.228167e+000, -1.142022e+001, -1.181605e+001, 1.369471e+001},

{1.007839e+001, -1.123470e+001, 7.528434e+000, -7.248752e+000, -1.147308e+001, -3.163436e+000, 9.662318e+000, -5.293115e+000, -3.199560e+000, 5.007595e+000, 3.056591e+000, -2.499411e+000, -2.094153e+000, 3.771568e+000, 1.054270e+001, 4.261166e+000, 1.095928e+001, -8.849998e-001, 1.426078e+001, 1.351914e+001, -8.098121e+000, 7.555536e+000, 1.141648e+001, -9.342719e+000, -3.629297e+000, -1.904921e+001, 4.050751e+000, -1.489770e+001, -1.353520e+001, -6.543544e+000, 1.563540e+001, -1.365948e+001, -5.667366e+000, -3.401000e+001, 7.046309e-001, -3.434257e+000, 1.889190e+000, 4.411553e+000, -3.176057e+000, -1.803539e+000, -1.454669e+001, -2.217102e+001, 2.676723e+000, -4.966878e+000, -4.212088e+000, 1.237868e+001, 5.390522e+000, -1.806770e+001, 2.281058e+000, -4.477049e+000, -6.255662e+000, -4.552755e+000, -5.083868e+000, 1.577854e+001, -3.866636e+000, 1.952926e+001, 1.819862e+000, -5.954871e+000, -2.785919e+000, -1.960597e+000, 4.001248e+000, -5.909546e+000, 9.126108e+000, 6.257120e+000, -1.246593e+001, 6.102472e-001, -7.383935e+000, 8.892322e+000, 5.586738e+000, -1.916788e+000, -8.098526e+000, 8.160951e-001, 2.799870e+000, 8.419671e+000, -3.520192e+000, 6.010489e+000, 8.968984e+000, -2.084680e+000, 5.446001e-001, -1.054439e+001, -2.057309e+000, -3.789386e+000, -7.647504e+000, 1.121626e+001, -1.254683e+000, 8.856552e+000, -1.561644e+001, 3.751188e+000, -3.856187e+001, -4.083249e+001, -7.252103e+000, 2.761454e+001, 1.107052e+001, -7.776612e+000, 8.773614e+000, -1.896133e+001, -1.281658e+001, 2.095027e+001, -8.504547e+000, 1.365821e+001, 2.176471e+001, 4.197882e+000, 9.375395e+000, -1.339873e+001, 2.552294e+001, -3.923093e+001, -2.869627e+001, -4.876611e+001, 8.106519e+000, 2.479756e-001, -3.610452e+001, -7.311637e+000, -3.315188e+001, 8.008259e-001, -1.129116e+001, -2.528823e+001, -2.618241e+001, 2.423595e+001, 2.053337e+001, 1.717614e+000, 1.581838e+000, 3.748859e+000, 2.454570e+001, 7.170243e-002, -1.611098e+001, 9.073967e+000, 6.874910e+000, -1.846384e+001, -7.129680e+000, -3.933390e+000, -1.359423e+001, 1.630495e+001, 1.407252e+001, 1.601864e+000, 7.418203e+000, -1.634438e+001, -2.042440e+001, 1.454508e+001, -3.103565e+000, 5.061735e+000, 2.043734e-001, -9.579880e+000, 3.207543e+000, 3.257990e-001, 3.260941e+000, -1.360196e+001, -9.178136e+000, 6.291247e+000, 5.706381e+000, -4.210108e+000, -8.552074e+000, 1.098360e+000, -2.417016e+001, -7.875283e-001, 3.047350e+001, 1.133352e+001, -1.158524e+001, 8.724009e+000, 9.153851e+000, -1.443884e+001, -1.469357e+001, 3.371710e+001, 3.539668e+000, 3.836004e+000, -1.820334e+000, 9.406742e-001, 2.915082e+000, 1.405466e+001, -2.948708e+001, -3.192299e+001, 1.366637e+000, -1.848095e+001, 2.476404e+001, -1.248105e+001, -1.589188e+001, 1.342827e+001, 6.906850e+000, 4.278131e+000, -4.869471e+000, 4.255909e+000, -5.584272e+000, 1.089379e+001, -7.177286e+000, 1.837623e+001, -5.074267e+000, 1.962633e+001, 1.215264e+000, -1.040273e+001, -1.826789e+001, 3.122111e+000, -1.080275e+001, -4.996162e+000, 2.582180e+000, -7.277401e+000, 9.968049e+000, -1.235267e+001, 1.516130e+001, -7.253280e+000, -1.104205e+001, -1.791282e+001, -4.948605e+000, -1.540663e+001, -1.464782e+001, -7.598921e+000, 1.641432e+001, 5.435878e+000, -4.705999e+000, -2.333648e+000, 1.682735e+001, -7.945164e+000, 7.881056e+000, -1.033415e+001, 1.394283e+001, -5.489817e+000, -5.142208e+000, -1.754427e+000, 4.364415e+000, -1.131840e+001, 1.116102e+001, 1.041972e+000, -3.140691e+000, -2.051401e-001, 4.239636e+000, 6.476816e+000, -1.243326e+001, 9.663868e+000, -1.366555e+000, 3.044174e+000, -1.749208e+001, 1.367378e+001, -8.281067e+000, -1.443199e+000, 2.836155e+001, -1.165845e+001, 1.175110e+001, -8.330422e+000, 1.279529e+001, -1.045286e+001, 6.584119e+000, -2.632882e+000, -


© ISO/IEC 2004 — All rights reserved

Copyright International Organization for Standardization
Provided by IHS under license with ISO
No reproduction or networking permitted without license from IHS
Not for Resale

2.708158e+000, -2.272652e+000, 1.849255e+000, -9.639814e+000, 2.978345e+000, -1.807502e+000, -9.651894e+000, -4.587209e+000, 1.374185e+001, 3.340413e+000, -1.299219e+000, -1.112586e+000, 9.565067e+000, -1.706153e+000, 6.149967e+000, 2.016577e+000, 3.065108e+000, 1.095870e+000, 7.912724e+000, -8.893785e+000, 9.730331e-001, 5.409988e+000, 2.482551e+000, 3.943130e+000, 9.881463e+000, -9.411239e+000, -2.468252e+000, 7.759307e-001, -3.211381e+000, -7.170306e-001, -1.339184e+000, 1.282060e+000, -1.854792e+000, 2.184353e+000, -1.279104e+001, -1.572135e+000, 6.031521e+000, -6.077428e+000, 2.390744e+000, 4.759843e+000, 9.346007e+000, 9.780914e+000, 1.317812e+000, 3.978146e+000, -4.728677e+000, 8.033168e+000, 1.077707e+001, -1.030266e+001, -3.103579e+000, -1.062245e+001, 4.060547e+000, 1.379121e+001, 5.931298e+000, -9.550266e-001, -1.167089e+001, -6.588020e+000, 2.575413e+000, -3.628960e+000, 9.108758e+000, 3.685426e+000, -9.946043e-001, -4.869381e+000, -2.145795e+000, 6.693882e-001, -4.593042e+000, 1.251093e+000, -7.619202e+000, -5.428080e+000, -3.052531e+000, 3.302316e+000, 4.846798e+000, -1.236659e+001, -1.050519e+001, -3.487410e+000, -3.375548e+000, 1.083424e+001, -5.808405e+000, 3.084328e+000, -2.632193e+000, -1.740729e+001, -9.477868e+000, -7.979244e+000, 2.471325e+000, -1.275740e+000, -8.765892e+000, 7.463791e-001, -1.817731e+000, 1.754573e+000, -1.338374e+001, -9.161325e+000, -6.163912e+000, -1.180319e+001, -2.424218e+001, 4.100280e+000, -8.302351e+000, -4.333348e+000, -7.492120e+000, 6.983321e+000, -6.811814e+000, -4.644571e+000, -7.831380e+000, -8.105424e+000, 6.698054e-001, -7.765656e+000, -2.107517e+000, -9.650173e+000, -1.581706e+000, -3.629341e+000, -1.851837e-001, -6.109861e+000},

{1.178215e+001, -1.041769e+000, 2.191784e+001, 4.806177e+000, 6.956359e+000, -9.560370e+000, -3.455297e+000, 2.255226e+001, 1.531223e+001, 1.980313e+001, -6.427176e+000, -2.104026e+001, 1.171381e+001, 1.861305e+001, 2.531076e+001, -8.114804e+000, -2.106821e+001, 1.989340e+001, -1.468282e+001, 1.242195e+001, 3.971575e+000, 3.234155e+000, 2.383071e+000, -1.763130e+001, 7.748999e+000, -4.115459e+000, -8.821039e-002, 1.347561e+001, -1.733902e+001, -6.936110e+000, -2.243312e+001, -5.424860e+000, -8.545327e-001, 5.996076e-001, 1.777337e+001, 9.776174e+000, 7.186035e+000, -6.773305e+000, -1.208697e+001, 2.604645e+000, 5.886745e+000, -1.238078e+001, -1.895227e+001, 5.822049e+000, 8.487036e+000, -6.143881e-001, 4.030524e+000, 6.798769e+000, -6.528312e+000, 6.854016e+000, 1.932966e+000, 4.679650e+000, 9.009452e+000, -7.136358e-001, 9.041702e+000, -3.305289e-001, 8.958880e+000, 1.819371e+001, -7.471114e+000, 1.519853e+000, 5.171742e+000, -7.112027e-001, 2.531736e-001, 3.883230e-001, 7.039309e+000, 1.748875e+000, -4.572705e+000, -2.078152e+000, 2.927138e+000, -8.320598e+000, 1.008081e+000, -3.124303e+000, 1.573314e+000, 1.110681e+001, 1.623428e+000, 8.229433e+000, 7.170038e+000, -1.264809e+001, 6.585062e+000, 5.271972e+000, 6.812059e-001, 1.551739e+000, -7.529682e+000, -2.349156e+001, 9.255598e+000, 1.533836e+001, 1.268923e+001, -2.743787e+001, 8.367817e+000, 1.979340e+001, -2.208694e+001, 1.705087e+001, 1.127704e+001, -9.350101e+000, 1.931338e+001, 3.157409e+000, -2.367027e+001, 1.301997e+000, -1.458623e+001, 1.439812e+001, -7.304796e+001, -1.644433e+001, 2.957523e+001, -1.452469e+000, 8.926087e+000, -1.167806e+000, 1.356401e+001, -3.960629e+001, 1.732406e+001, 1.086732e+001, 3.156100e+001, -1.602460e+001, 1.571796e+001, 5.490137e-001, 2.282582e+001, 1.320493e+001, -9.519778e+000, -5.410558e+000, -7.997934e-001, 5.658942e+000, -4.723625e+000, 1.726933e+001, -6.302203e+000, 1.226421e+001, -1.409117e+001, -1.924659e+000, -2.084377e+000, 3.632745e-001, 7.045035e+000, -3.704650e+000, -1.591374e+001, -2.624929e+000, 7.719009e-001, 1.219857e+001, 1.618450e+000, -1.283714e+001, -8.329548e+000, 1.779104e+001, 1.450363e+001, 6.377175e+000, 1.244889e+000, 8.308616e+000, 6.382454e+000, 1.647255e+000, -1.041339e+000, 2.812301e+000, 8.762711e+000, 5.127484e+000, -1.034202e+001, -5.909651e+000, -1.887740e+000, 1.222689e+001, -2.536681e+001, 1.660633e+000, 1.155376e+001, -1.580581e+001, 8.960273e+000, -7.903479e+000, -8.040051e+000, 1.537450e+001, 9.920834e+000, -1.188575e+001, 1.179062e+001, -8.623745e-001, 2.102453e+000, -1.410638e+001, -8.817325e+000, 1.569203e+001, 3.037352e+000, -8.572097e+000, 1.704919e+001, 1.430983e+001, 4.248613e+001, -1.619443e+000, 2.156695e+001, 4.412745e+000, 6.674905e+000, 3.049184e+001, 6.588792e+000, -3.919678e+000, -1.944156e+001, -8.234311e+000, -2.502680e+001, -1.776143e+000, 1.559563e+001, -1.078595e+001, 6.853832e+000, 6.596650e+000, 1.325900e+000, 1.162245e+000, -8.376163e+000, 1.106458e+001, -2.073626e+001, 9.436496e+000, 4.403532e+000, 1.596572e+000, -3.896169e+000, -4.046747e+000, -1.997696e+001, 1.159048e+001, -1.820804e+000, -4.501009e+000, -4.088693e+000, -1.438799e+001, -3.909891e+000, 1.161271e+001, -1.335241e+001, -1.244924e+000, -1.518903e+000, 2.459555e+001, -3.255778e-001, -7.118927e+000, -2.588340e+000, -4.782020e+000, -3.033886e-001, 2.672929e-001, 4.568288e+000, 4.660158e-001, 7.742267e+000, -2.624587e+001, 6.410271e+000, -2.614454e+000, -8.567286e+000, 3.952920e+000, 5.652895e+000, 8.037595e+000, -4.534928e+000, -6.531720e+000, -9.867802e+000, 6.383799e-001, -6.144176e+000, 6.179759e+000, 1.853476e+001, -5.356937e+000, -2.390789e+000, 6.733621e+000, -1.336524e+001, 1.198852e+001, 3.342471e+000, -6.632112e-

© ISO/IEC 2004 — All rights reserved


Copyright International Organization for Standardization
Provided by IHS under license with ISO
No reproduction or networking permitted without license from IHS
Not for Resale

001, -9.330296e+000, 1.158357e+001, -3.548103e+001, 1.358592e+001, 7.994146e-001, 5.255922e+000, -1.201914e+000, -
1.215123e+001, -2.167209e+001, -5.765638e-001, -1.908340e+001, 4.538495e+000, 1.348114e+001, -9.495963e+000,
7.760894e+000, -6.546394e+000, 1.491770e+001, 6.858024e+000, 1.502847e+000, 3.479575e+000, 2.260568e+001, -1.026410e+001,
-1.078377e+001, -2.224565e+001, -8.952745e+000, -1.364715e+001, -3.618615e+000, -6.463800e+000, 8.475166e+000,
8.560216e+000, -8.352415e+000, -1.302265e+001, -6.381238e+000, 1.742473e+001, -8.785297e-001, 1.783085e+001,
1.374817e+001, 4.683917e+000, -1.578454e+000, -1.246030e+001, -1.100404e+001, -1.165208e+001, 6.555457e+000, -
1.226587e+001, 6.324604e+000, 1.262339e-002, -7.654979e-001, -1.202827e+001, 9.053774e+000, 1.475708e+001, 6.766027e+000, -
1.640687e+001, 1.846637e+000, 3.559956e+000, 2.668611e+000, -2.137337e+000, 2.081790e+001, 7.101416e+000, 1.124010e+001,
9.957282e+000, 7.977869e+000, 3.423653e+000, 3.839218e+000, 6.632069e+000, 4.016097e+000, -3.770297e+000, 3.469418e+000,
4.114107e-001, -9.728318e+000, 4.668473e+000, 1.490692e+001, 2.203141e-001, -1.486279e+001, 1.452707e+000, 2.255151e+001, -
2.178316e+000, -1.833597e+001, -9.515032e+000, 2.956112e+000, -2.686513e+000, 7.618388e+000, 1.459947e+001, -
1.051568e+001, 2.299654e+000, 7.651049e+000, 6.300162e+000, -4.752410e+000, 5.612184e+000, -2.875229e+000, -
3.789837e+000, 2.715653e+000, -2.632284e+000, 1.930775e+000, 4.347294e-001, 2.395478e+000, -4.802444e-001, -5.198571e+000,
6.264247e+000, -1.350000e+001, -1.240543e+001, 1.053373e+000, 5.134843e+000, 1.023947e+000, -6.565879e+000, -
7.755830e+000, -1.064572e+001, -5.914485e+000, -6.855206e+000, -6.786578e+000, 8.074720e+000},
{-3.636166e+000, -3.017879e+000, -2.404116e+000, -1.237366e+001, -5.067465e+000, 8.672392e+000, 1.188540e+001, -
3.749977e+001, -3.843867e+000, 1.724624e+000, -1.917423e+000, 1.133082e+001, -6.521566e-001, -1.065531e+001, -
3.558730e+001, -4.217640e+000, -1.892620e+001, -1.544149e+000, 5.543228e+000, 1.169506e+001, 1.245532e+001, -
6.439725e+000, -2.177411e+001, 6.212423e+000, -4.396254e+000, 1.381220e+001, 2.867699e+001, -2.542362e+000,
1.533084e+001, 1.114970e+001, -8.574301e-001, -1.180580e+001, 1.749466e+000, 2.120512e+001, -8.105910e+000, -
2.102367e+000, 4.661838e+000, 1.756816e+000, 1.112453e+001, 7.576940e+000, -3.425655e+000, 8.484504e+000, 9.074915e+000,
4.738157e+000, 7.912917e+000, 1.325725e+001, 1.643572e+000, -1.966468e+000, -6.410444e+000, 2.016720e+001, 5.157754e+000,
-2.638610e+000, -6.636499e+000, 1.029470e+001, -2.997972e+000, -2.060114e+001, -1.370574e+001, 9.596070e+000, -
5.272317e+000, 1.412830e+001, -2.979809e+000, -3.049865e+000, 7.517879e+000, 3.114763e+000, -2.067967e+000,
6.736973e+000, 5.138098e+000, 1.050572e+001, -2.095810e+001, 3.078978e+000, 8.191827e+000, 7.826933e+000, 5.954102e+000,
5.095729e+000, 2.129184e+000, -2.210543e+000, -1.090348e+001, -8.810405e+000, 3.021179e+000, -8.538160e-001, -
9.648765e+000, -6.794343e+000, -4.979877e+000, 6.101292e+000, -9.235112e+000, 8.793447e+000, 1.558324e+000,
7.642904e+000, 9.575015e+000, 2.463782e+001, 5.700281e+000, 1.036892e+001, -5.672618e+000, -1.911412e+001, -
1.046443e+001, 2.415523e+000, -2.185355e+001, -5.131574e+000, -5.577248e+001, 1.014706e+001, -7.403864e-001, -
6.062369e+000, 1.160609e+001, 8.298378e-001, -2.149577e+001, -2.520024e+001, -2.748703e+001, 2.308016e+001, 2.509997e+001,
8.426315e+000, -1.002753e+001, 3.605770e+001, 1.606195e+001, -1.942992e+001, -3.317810e+000, -1.323363e+001, -
4.550786e+000, 3.987567e+000, -2.404638e+001, -6.947187e+000, -2.135126e+001, -3.107326e+000, 1.981611e+001, -
7.367384e+000, 4.769553e+000, -9.954132e+000, -1.606706e+001, -3.954271e+000, 1.464501e+001, -1.333245e+001,
1.311385e+001, -1.486595e+001, 1.860747e+001, -3.378169e+000, 4.204834e+000, -4.064173e+000, -1.173139e+001,
2.048593e+001, 8.453151e+000, 7.241169e+000, 1.472277e+001, -3.190350e+000, 8.625729e+000, -1.121045e+001, 2.137356e+001,
1.723889e+000, -3.500686e+000, 2.648306e-001, -1.171251e+001, -1.082700e+001, 2.735878e+001, -2.120500e+001,
1.273963e+001, -3.886726e+000, -5.076558e+000, 1.959921e+001, 2.218835e+001, -1.776759e+001, -6.059730e+000,
8.788997e+000, -2.895055e+001, 1.199145e+001, 1.145430e+001, 6.365966e+000, 1.418180e+001, -1.169565e+001, 2.987059e+001,
-1.775018e+001, 6.776445e+000, -1.748684e+001, 4.704758e+001, -3.931257e-001, 6.176819e+000, 1.578904e+001, 1.716005e+000,
7.142243e+000, -4.560171e+000, 1.707170e+001, 1.380704e+001, -6.484916e+000, 1.153607e+001, 7.653693e-001, -1.673349e+001,
-7.132025e+000, -2.317667e+001, 8.121876e+000, -3.169783e+000, -1.113905e+001, 5.663098e+000, -8.108896e+000,
2.225411e+001, 6.159347e+000, -1.620837e+001, 1.416663e+001, 1.067989e+001, -4.162808e+000, 2.445860e+001, 1.263586e+001,
-1.083360e+001, 1.047443e+001, -5.379575e+000, 2.658115e+001, -6.506474e+000, -7.234774e-001, 1.159813e+001, -
1.631585e+001, 9.621408e+000, -3.744668e+000, 8.785795e+000, -1.175359e+001, 6.741088e+000, 7.330623e+000, 8.683081e+000,
6.800875e-001, -5.103568e+000, 8.873650e+000, -9.728879e+000, 1.084619e+001, -1.945749e+001, -1.304536e+001, -
1.214907e+001, -4.697103e+000, 2.701605e+000, 4.536374e+000, 4.548372e+000, 5.289284e+000, -4.822907e+000, -
1.827121e+001, -7.788821e+000, 1.212999e+001, -1.228958e+001, -1.295564e+001, -2.248909e+000, 6.017861e+000, -
3.646177e+000, 5.311949e+000, 1.263903e+001, 1.621809e+001, 3.279413e+000, -1.209181e+001, -2.394840e+000, 1.364116e+001,


© ISO/IEC 2004 — All rights reserved

Copyright International Organization for Standardization
Provided by IHS under license with ISO
No reproduction or networking permitted without license from IHS
Not for Resale

-3.002400e+001, -7.236675e+000, -5.334798e+000, -4.453355e-002, 1.849359e+000, 2.316957e+000, -1.635514e+001,
4.510257e+000, -6.207537e+000, -2.501408e+001, 5.736079e+000, 1.469703e-001, -6.234227e+000, 8.547132e+000, 1.368660e+001,
-4.490445e+000, 2.053049e+001, 1.429862e+001, -3.018730e+000, 8.716373e+000, -9.041875e+000, -8.429923e+000, -
1.339938e+000, 1.882949e+000, 4.178453e+000, -1.912039e+001, 7.174308e+000, 3.999272e-001, -1.135369e+001, -7.776280e+000,
-7.240783e-001, -1.442147e+001, -1.270132e+000, 2.585620e+000, 9.180093e+000, -1.073829e+000, 9.372471e-001, 1.109305e+000,
1.668753e+001, 2.800230e+000, -1.814715e+001, 1.605568e+001, -1.190556e+001, -1.569572e+001, -4.268757e+000,
1.339571e+000, 2.574953e+001, 2.111232e+000, 9.515042e+000, 3.759317e+000, 3.594853e+000, -3.734752e+000, 1.360674e+001,
1.274139e+001, 2.426849e+000, -5.635150e+000, -2.870418e+000, 4.727694e+000, -2.922586e+000, -2.396092e+000, -
6.204629e+000, -8.370307e+000, -7.058345e+000, 5.770838e+000, -2.357502e+000, 3.015474e+000, -1.278106e+000, -
4.847399e+000, 1.408523e+001, 2.744596e+000, -1.044578e+001, 6.816323e+000, 1.035170e+001, 3.761088e+000, -3.799870e+000,
-1.338385e+001, -2.910296e+000, 6.592637e+000, 1.294384e+001, 4.195572e+000, 1.337886e+001, -1.603978e+001, -
4.215647e+000, -4.096419e+000, 4.873795e+000, 5.243765e+000, 2.178803e+000, 1.136688e+000, 8.222763e+000, 5.179406e+000,
1.483200e+001, 1.075984e+001, -9.937210e+000, -8.136405e+000, 3.947671e+000, -3.263905e+000, 7.690897e+000,
5.746650e+000, -6.226052e+000, 2.603527e+000, -4.718070e+000, 1.190794e+001, -2.360833e+000, 8.476488e+000,
6.440238e+000, -5.323953e+000, 6.469025e+000, 5.510615e+000},
{-8.556781e+000, -4.836792e+000, 1.352347e+001, 4.090700e+000, 4.312771e+000, -1.174964e+001, -2.471223e+001,
1.888723e+001, 5.545268e+000, -5.651738e+000, 7.664569e+000, -1.274883e+001, 9.277955e+000, 1.247471e+001, 1.941418e+001,
3.661798e+000, 1.228710e+001, 1.373444e+001, -8.581778e+000, -6.251327e+000, 3.740337e+000, 1.595540e+001, -
2.864118e+001, -7.538925e+000, 8.261896e-001, -6.719597e+000, -3.994892e+000, 2.192351e+001, -6.184775e+000,
5.086514e+000, 1.516944e+001, -1.245015e+001, -3.227839e+000, -2.249243e+001, 5.969490e+000, 6.149883e+000,
5.728006e+000, 1.044015e+001, -2.262935e-001, 4.647164e+000, 1.667444e+000, -1.728137e+001, -3.488033e+000, 1.716956e+001,
1.943407e+000, -7.217756e+000, -1.714579e+001, 6.448930e+000, 8.903551e+000, 8.036413e+000, -1.848007e+001, -9.874362e-
001, -3.194492e+000, -9.146701e-001, 1.225480e+001, 1.811376e+001, -1.305938e+001, -2.712092e+000, 3.022803e-001, -
1.793720e+000, 1.365634e+001, 1.166616e+001, -2.509174e+000, -1.305885e+001, -6.171253e+000, -6.024494e+000,
6.347878e+000, -8.854000e+000, 2.079093e+001, -2.073109e-001, 1.775189e+000, 3.225555e-002, 3.698794e+000, -1.027418e+001,
-5.257796e+000, -6.173978e+000, 4.430780e-001, -5.223609e+000, -4.520729e+000, -2.299632e+000, 2.494093e+000, -
5.916917e+000, 1.314560e+000, 2.841263e+000, 2.662635e+000, 6.791537e+000, 1.042956e+001, 1.321132e+001, -2.868039e+001,
2.119879e+000, 1.359742e+001, -1.547275e+001, -1.889866e+000, -2.144157e+001, -8.357922e+000, 2.299973e+001,
1.605273e+001, -2.891382e+001, 2.661380e+001, 3.961099e+001, -5.284252e+000, -2.556159e+001, 1.747309e+001, -
1.978016e+001, -1.803997e+000, -2.276126e+000, -6.448440e+000, 1.243582e+001, -1.207339e+001, -3.841334e+001,
3.900997e+000, 6.522571e+000, -3.110040e+001, -2.038263e+001, 8.470467e+000, -3.744909e+000, -2.628971e+001,
9.636739e+000, -4.673503e+000, 8.509391e-002, 1.081054e+001, 7.565448e+000, 1.913474e+000, 1.146637e+001, -1.340458e+001,
4.630210e+000, -9.025924e+000, 1.386503e+000, 1.821380e+001, -7.196505e+000, -8.401414e+000, -3.418036e+000, 9.838493e-
001, -1.629424e+001, -3.805238e+000, -5.730905e+000, -1.384768e+001, -6.326327e+000, 3.238923e+000, 5.842311e+000, -
2.086427e+001, -2.047953e+001, -2.177985e+001, -1.275543e+001, -4.420437e+000, 1.684977e+001, -1.266444e+001,
2.732106e+001, 6.898416e-001, 1.052765e+001, -1.088319e+001, 4.077314e+001, -2.021519e+001, 2.286103e+001, 1.121388e+001,
-9.831668e-001, -1.401998e+001, 3.814640e+001, -3.131061e+000, -3.346410e+000, 1.102687e+001, -2.053679e+001,
1.799756e+001, -4.933153e+000, -5.149172e+000, 2.199039e-001, 7.838037e+000, -7.813373e+000, -2.123095e+001, -
3.170485e+001, 1.671864e+000, 1.067784e+001, 6.679249e+000, 8.656717e+000, -1.488224e+001, -2.049085e+001, 8.922956e+000,
4.818294e+000, 1.116494e+001, 1.814486e+001, 1.103437e+001, 1.322324e+001, 7.567325e+000, -1.302258e+000, 2.691434e+000, -
2.062966e+000, 8.298736e+000, 1.243747e+001, 1.393131e+000, 7.968744e+000, -1.262262e+001, 1.669402e+001, 8.200908e+000, -
9.731280e+000, 7.898772e+000, -6.887701e-001, 5.257354e+000, 1.157775e+000, -2.218303e+001, 1.231519e+001, -2.825290e+001,
-6.837036e+000, -1.696963e+001, -1.345586e+001, -4.621745e-001, -2.140245e+001, -9.170901e+000, 2.213743e+001,
6.351810e+000, -1.477274e+000, 9.037495e+000, -1.173886e+001, 6.281985e-001, 1.027046e+001, 2.409876e+000, -1.216097e+001,
1.583421e+000, -3.919240e+000, -2.113396e+001, -3.018175e+000, -1.350264e+001, -1.564088e+001, -3.020268e+000, -
1.069616e+001, 4.766460e+000, -3.988104e+000, -8.746597e+000, 6.741976e+000, -1.880720e+000, 6.015762e+000,
3.092971e+001, -2.186886e+000, -4.438598e+000, -9.826913e+000, -7.352088e-001, 5.911723e+000, -1.856818e+001, -
1.554672e+000, 5.316679e+000, 1.262149e+001, -3.649623e+000, 3.468826e+000, -1.898254e+000, 9.029531e-001, 2.032831e+001,

© ISO/IEC 2004 — All rights reserved


Copyright International Organization for Standardization
Provided by IHS under license with ISO
No reproduction or networking permitted without license from IHS
Not for Resale

-1.897112e+001, -1.143739e+001, -1.217339e+001, -1.093024e+001, -1.138961e+001, -6.846362e+000, 1.132713e+001, -
8.065292e+000, 1.673194e-001, 1.736827e+001, -3.055333e+000, -1.827634e-001, 3.207110e+000, 1.029701e+001, -4.312801e+000,
-6.591884e+000, -4.960771e+000, 8.639544e-001, -6.029396e+000, -5.760706e+000, 9.420561e-001, 1.071635e+001, 1.983871e+001,
3.834108e-001, 7.612462e+000, 9.839565e+000, -9.082436e-001, -1.141220e+001, -9.112509e+000, 1.573701e+000, -1.242691e+001,
-1.587049e+000, 6.089123e+000, 5.219108e+000, 1.163531e+001, 8.400976e+000, 1.364951e-001, -8.176617e-001, -5.944040e+000,
-6.653238e+000, -1.226542e+001, 9.956404e-001, -1.674255e+000, -4.511082e+000, 1.719109e+000, 7.832356e+000, -
4.300014e+000, 5.932770e+000, 5.928191e-001, 3.982762e+000, -7.617078e+000, -2.268249e+000, -7.550766e+000, 1.497006e+001,
-1.295219e+000, -1.121777e+001, 5.761209e-001, -4.824128e-002, -5.898676e+000, 2.407435e+000, -2.910714e+000, -
3.255902e+000, 3.286598e+000, 6.672723e+000, 2.878764e+000, -5.005501e+000, -5.055154e-001, -8.638676e+000, 6.644031e+000,
-1.708986e+000, 1.198997e+001, -6.721493e+000, -3.590561e+000, -1.365004e+001, -3.419162e+000, -1.125135e+001, -
2.093417e+001, 1.208485e+001, -1.376097e+001, 8.025151e+000, 1.579002e+000, 9.141408e+000, -1.350946e+000, -
7.051926e+000, -1.605101e+001, 1.875840e+001, -1.411813e+000, -1.589349e+000, -5.591144e+000, -1.790003e+000,
1.311276e+001, 1.601431e+000, -1.347851e-001, 1.276262e+000, 8.510480e+000, -1.197195e+001, 1.279086e+000, 1.969343e+000,
-1.191809e+001, 9.512343e+000, 4.040833e+000, 5.462579e+000, -9.376043e+000, -2.035532e+000, -6.693860e+000},
{6.620651e+000, -1.130955e+001, 2.061846e+001, 2.193066e+001, 2.051000e+001, -4.131708e+000, -1.372582e+001,
1.512892e+001, 2.238227e+001, -1.053090e+001, -2.470644e-001, -8.694663e+000, -1.233777e+001, -2.105809e+001,
1.090932e+000, -1.828537e+001, 6.958656e+000, -1.870789e+000, -1.181686e+001, -2.226973e-001, 5.349676e+000,
2.907410e+000, -1.369856e+001, -8.681093e+000, 1.364728e+001, 5.853175e-001, 3.711134e+000, -2.283915e+000, 7.348158e+000,
-7.645449e+000, -1.600401e+001, -2.919627e+001, 1.165540e+001, -7.497633e+000, 2.908191e+000, 6.152032e-001,
1.424822e+001, 1.848888e+000, -1.539254e+001, 1.671125e+001, -3.880501e+000, -1.349919e+000, -1.059167e+001,
6.665038e+000, 1.752791e+001, -1.385042e+001, 1.273128e+001, -5.597059e+000, -1.566091e+001, 3.640617e-001, -1.530485e-001,
1.874712e+001, -3.592648e+000, -1.856726e+000, -1.696567e+001, 5.322191e+000, -1.444252e+001, -6.275134e+000, -
2.378351e+000, -5.925324e+000, -7.439930e+000, 8.143063e+000, -3.212716e+000, -1.505433e+001, -4.557434e+000, -
8.401863e+000, -1.847208e+001, -7.655538e+000, 1.786949e+001, -3.835065e+000, 2.514316e+000, -8.417600e+000, -
2.621567e+000, -1.041005e+001, -3.298390e+000, 1.297848e+001, -1.560604e+001, 9.144097e-002, 9.789024e+000, -
6.877857e+000, 3.110561e+001, -1.726720e+001, -1.233373e+001, 1.502772e+001, 8.194548e-001, -4.011634e+000, -
1.123081e+001, 2.590260e+000, -2.920776e+001, -1.823100e+001, -1.624757e+001, -1.107542e+001, -1.742793e+001,
8.775222e+000, -2.224951e+001, -5.900827e+000, 2.891601e+001, -3.155010e+001, -2.849348e+001, 4.809099e+001, -
6.825794e+000, 2.152307e+001, -1.219137e+001, -7.759039e+000, 2.227105e+001, 4.256952e+001, 1.915427e+001, -
6.566260e+000, -1.684008e+000, 3.988969e+000, 9.817816e-001, -1.585679e+001, 2.413525e+001, 1.362695e+001, 7.761273e+000,
1.242787e+001, -4.257544e+000, 1.967412e+001, -1.747431e+001, 1.053265e+001, -1.697016e+001, 8.975009e-001, -
1.509822e+001, -2.566137e+001, -2.632263e+001, -1.333133e+001, -1.233770e+001, -8.928819e+000, 4.784702e+000,
9.092268e+000, 1.592246e+001, -1.946609e+000, 1.427262e+000, 3.033858e+001, 2.445038e+001, -1.240625e+000, 4.653595e+000,
1.876216e+001, -1.052890e+001, -1.648134e+001, 1.497296e+001, 4.579599e+000, 7.081019e+000, 1.412377e+001, -
3.704856e+000, -7.029833e+000, 1.033557e+001, 2.924475e-001, 9.099878e+000, 4.708737e+000, 3.374503e+000, 3.662501e+000, -
3.535352e+000, 4.091114e+000, -3.438703e+000, -1.823743e+001, 7.224079e+000, -1.503878e+001, 6.296048e+000, 9.916480e-001,
3.944143e+000, -1.118056e+001, 4.679327e+000, 5.795222e+000, 6.355590e-001, 2.381316e+001, 1.554656e+001, -1.848051e+001,
-7.745902e+000, 9.298369e+000, -2.128772e+001, 1.476758e+001, -3.107946e+000, -1.593050e+001, -2.758040e+000, -
1.237583e+000, -1.601203e+001, -2.506494e+001, 1.929530e+001, 1.483958e+000, 1.224389e+001, 9.897243e+000, 7.398322e+000,
-2.580992e+001, -1.083066e+001, -1.116064e+001, 5.190393e+000, -6.781591e+000, -1.207168e+000, -1.474639e+000, -
6.377074e+000, 7.692551e+000, -1.665981e+001, 2.340432e+001, -1.276115e+001, -9.254135e-001, -1.915658e+001, -
3.462963e+000, -6.858163e+000, 1.323722e+001, -3.748369e+000, 3.522293e+000, 3.180706e+000, -5.656842e+000,
7.619965e+000, 1.526363e+001, 4.263796e+000, 9.749227e+000, 9.044197e+000, 1.064612e+001, 1.216073e+001, -1.074493e+000,
6.596592e+000, 5.437961e+000, 1.524006e+001, -1.521485e+001, 7.194098e+000, -2.133559e+000, 8.041952e+000, -
7.520282e+000, 1.124105e+001, 1.331855e+001, 5.300262e+000, 8.236500e+000, 1.245083e+001, -1.721531e-001, 4.817983e+000, -
7.101317e+000, -9.085135e+000, -4.258856e+000, -1.148740e+001, -7.442868e+000, -1.268902e+001, -2.530411e+001, -
5.906717e+000, 8.663277e+000, -1.799667e+001, 6.375689e+000, 9.756812e+000, -2.134644e+000, 1.294667e+001, -
2.150928e+001, -3.920035e+000, -1.124126e+001, 9.782600e+000, -8.410739e+000, -5.864977e-001, 7.964680e-001, -


© ISO/IEC 2004 — All rights reserved

Copyright International Organization for Standardization
Provided by IHS under license with ISO
No reproduction or networking permitted without license from IHS
Not for Resale

1.043017e+001, 1.780196e-001, 4.435000e+000, -3.568541e+000, 6.736343e+000, -4.344969e+000, -5.728237e+000, -2.364847e+000, -7.861051e+000, -4.619709e+000, 6.679387e+000, -1.845103e+000, 2.335735e+000, -3.565706e+000, 1.321522e+000, 1.054015e+001, -1.667661e+000, -1.375965e+000, 2.476761e+000, 4.610234e+000, 1.095929e+001, 1.094868e+000, -4.251562e+000, -1.562591e+001, 1.385484e+001, -1.493866e+001, -6.243225e+000, 5.897639e+000, -6.130987e+000, -3.750508e-001, 1.788620e+001, 1.264029e+000, -1.679742e+000, 4.941055e+000, -8.146065e+000, 7.367533e+000, -3.161124e+000, -1.044486e+001, 1.754083e+001, 3.846755e+000, -1.152870e+001, 3.267478e+000, 3.636730e+000, -6.158726e+000, -2.945188e+000, 1.308120e+001, -5.100910e+000, 1.551769e+001, -3.920691e+000, 9.147579e+000, -9.654303e+000, 2.214183e+000, -1.828801e+000, -2.014970e-002, -9.928313e-001, 8.885117e+000, -1.622339e-001, -1.410879e+001, 6.859831e-001, -4.489737e+000, -4.080400e+000, 1.391132e+000, 6.235182e+000, -9.553670e+000, 1.693225e+001, -1.107496e+001, -1.057361e+001, 6.503783e+000, 5.636234e+000, 7.262345e+000, -1.471728e+001, -9.043447e+000, -5.859585e+000, 1.224164e+000, 1.316887e+001, 3.328300e+000, -7.270202e+000, -1.040792e+001, -1.145999e+001, 1.036695e+000, 4.873565e+000, 8.152380e+000, -1.255051e+000, -3.606112e+000, -2.664396e+000, 9.170824e+000, -6.973048e+000, 6.515469e+000, 1.020909e+001, -6.451628e+000, -7.924352e+000, -5.410657e+000, -3.178839e+000, -2.199534e+000, 4.398104e+000, -4.653945e+000, -2.248150e+000, -1.288911e+001, 1.119738e+000, -1.376288e+000, 3.589784e+000, -1.177043e+000},

{1.077019e+000, 3.800383e+001, -1.312323e+001, -9.262223e+000, 1.053968e+001, 4.032769e+001, -2.121150e+000, -4.474329e+001, -2.516920e+001, 1.012229e+001, -2.853087e-002, -7.559991e+000, -1.291883e+001, -2.851905e+001, -8.068686e-001, -1.992147e+000, -2.552168e+001, 2.306823e+000, -6.957635e+000, -5.600809e+000, 1.599531e+000, -2.958119e+000, 2.024569e+000, 9.037248e+000, -1.439743e+001, -6.566615e+000, -1.258727e+001, -6.099176e+000, 5.894864e+000, -2.887749e+001, -2.917735e+001, -5.458476e+000, -1.668881e+001, 1.105663e+001, -1.156501e+001, -3.674445e-001, 1.824676e+001, -1.622005e+001, 1.476267e+001, -1.258062e+001, -9.200185e+000, -1.679380e+001, 1.178579e+001, -1.002829e+001, 2.033115e+001, 4.401205e+000, -2.801591e-001, 3.941861e+000, -8.078539e-001, 7.319095e+000, -8.948443e+000, 3.033302e+000, 8.409054e+000, 5.769802e-001, 7.460865e+000, 8.187471e+000, -1.331053e+000, 8.360059e-001, 6.784986e+000, -3.231490e+000, -8.087473e+000, 2.803766e-001, 1.158292e+001, 6.017826e+000, -3.387444e+000, 1.416629e+000, 8.397077e+000, 4.329061e+000, 1.892772e+001, -4.309604e+000, 4.877792e+000, 9.738404e+000, -1.265724e+000, -3.158303e+000, -7.033742e+000, -9.229867e+000, -1.905042e+001, -8.035897e+000, 1.002320e+001, 3.410024e+000, 2.630889e+001, -7.345480e+000, -5.301948e+000, -9.686633e+000, -1.432759e+001, 7.029982e+000, 1.802526e+001, 3.380535e+000, -1.842095e+001, -7.898625e+000, 2.563724e+001, 1.101202e+000, 5.335297e+000, -2.331075e+000, 1.894654e+000, -3.804079e+000, -1.431859e+001, -2.223629e+001, 9.828891e-001, 2.001612e+001, -6.227348e+000, -3.069070e+001, -5.758453e-001, -2.368216e+001, -7.056897e+000, 5.232784e+000, -7.121322e+000, -2.062247e+001, -1.744229e+001, 3.088443e+001, -4.427617e+000, -1.505505e+001, -2.035120e+001, 3.169202e+000, 1.764106e+001, -1.942138e+001, 7.060989e-001, -1.078464e+001, 2.340517e+001, -1.877853e+001, 3.051605e+001, 6.877253e+000, -1.486143e+001, 1.705190e+001, 4.364493e+001, -2.355961e+001, 1.144748e+001, -3.736434e+001, -3.877116e+000, 3.243178e+000, 4.916922e+000, 9.808098e+000, -8.328285e-001, 4.291474e+000, -6.572864e+000, 2.675896e+001, 1.710199e+001, 8.353286e+000, -4.718939e+000, -1.477543e+001, 8.985867e+000, -1.781639e+001, -9.162731e+000, -3.477131e+000, 2.212094e+001, -1.149040e+001, 4.789975e+000, -7.783459e+000, 9.344970e+000, 1.025605e+001, -1.306058e+001, -1.967061e+001, 2.649337e+001, 8.884347e+000, -3.335238e+000, -2.218096e+001, -1.610118e+000, 9.560232e+000, -3.048457e+000, -1.418005e+001, -3.459970e+000, 2.409221e+001, -2.023997e+001, -8.202079e+000, 1.446508e+001, 1.605890e+000, -5.629247e+000, -2.187569e+001, 2.848306e+001, 2.348250e+001, -3.096866e+001, 4.353544e+001, -1.208975e+001, -3.393281e+000, -7.584203e+000, 3.535905e+001, -5.522223e+000, -1.819195e+000, -2.189525e+001, 1.921358e+001, 7.626945e+000, 1.947055e+001, 2.021410e+001, -1.067572e+001, -2.553431e+001, 2.337027e+001, 5.483169e+000, 5.649191e+000, -5.998999e+000, -1.140864e-001, 1.466525e+001, -1.015599e+001, -1.978435e+001, -1.880279e+001, 4.126328e+000, 3.619351e+000, -1.391871e+001, 2.215543e+001, -3.577023e+000, 5.450296e+000, 3.384394e+000, 3.470014e+001, 2.933872e+001, -4.551947e+001, 6.376513e+000, -2.747934e+000, -1.123427e+001, 4.303238e+000, 2.801537e+001, -2.494073e+001, 6.156174e+000, -5.015271e-002, -1.690190e+001, -9.318300e+000, -1.109418e+001, -5.781894e+000, 5.051392e+000, -3.386815e+000, 1.091092e+001, 5.236440e+000, -8.483585e+000, 6.935369e+000, 1.152612e+001, -4.272469e+000, 2.313004e-001, -7.481213e+000, -9.007343e+000, -1.372274e+001, 1.332058e+001, 8.070779e+000, -1.050225e+001, -2.992494e+000, 1.460623e+001, 1.781967e+001, -2.372991e+000, 8.431787e-001, 1.844540e+001, 6.104861e+000, -5.342666e+000, -6.498879e+000, -

© ISO/IEC 2004 — All rights reserved


Copyright International Organization for Standardization
Provided by IHS under license with ISO
No reproduction or networking permitted without license from IHS
Not for Resale

1.584171e+001, 1.429550e+001, -1.496609e+001, 1.111944e+001, 2.635837e+000, -2.792601e+001, 4.569157e+000, 2.572200e+001, -9.698985e+000, -3.760688e+000, 4.759478e+000, -1.223902e+000, -1.079772e-001, 1.245004e+000, 6.802511e+000, -2.342964e+001, 5.601737e+000, -8.057805e+000, 2.784223e-001, -9.556260e+000, 7.556054e-001, 5.377971e+000, 7.958657e-001, 2.222932e+001, 7.096329e-001, 1.266213e+001, 5.410717e+000, -2.669058e+000, 7.335199e-001, 3.223787e+000, -1.433462e+001, -1.673295e+001, -1.354928e+001, -8.429670e+000, -1.085087e+001, 1.749790e+001, -1.685511e+001, -9.859591e+000, 4.884032e+000, 2.061636e+001, 1.902804e+001, -4.035485e+000, -1.400931e+001, -3.005959e+001, 7.199335e+000, -2.617072e+000, -1.953520e+001, -2.847667e+001, 2.255172e+001, -1.116254e+001, 1.199103e+001, 6.701922e+000, 2.110353e+001, -4.095501e+000, 9.006531e+000, -1.603945e+001, 7.204424e+000, -5.654118e+000, 9.206055e+000, -5.655221e+000, 1.152130e-001, 1.070191e+000, 1.689724e-002, 1.221108e+001, 5.316492e+000, -4.272077e-001, -9.233208e+000, 4.955064e+000, 7.507679e+000, 1.517464e+000, -6.836612e+000, -1.083395e+001, 3.209234e+000, 1.139141e+001, -1.074335e+001, 2.306642e+000, 9.157285e+000, 8.825248e+000, -4.810027e+000, 4.300117e+000, -7.376446e+000, -1.163552e+001, -6.152824e+000, -2.352530e+001, 3.099911e+000, 1.182474e+001, 2.492013e+001, 1.521290e+001, 8.681341e+000, -2.366014e+001, -8.681064e+000, 2.055446e-002, -8.993271e+000, 7.625435e+000, -4.601174e+000, -2.615696e+000, -2.428695e+000, -2.150050e-001, 1.452793e+001, -1.137276e+000, -3.106356e+000, 9.802712e+000, 2.661166e-001, -9.112853e+000, 9.773885e+000, 1.766473e+001, 7.930754e+000, -1.162772e+001, -6.222075e+000, 3.227341e+000},
{-5.570995e+000, -2.335629e+000, 1.609913e+001, -1.745361e+000, -5.254141e+000, -1.512119e+001, 4.561520e+000, 1.562497e+001, -6.142988e+000, -6.542330e+000, 1.411501e+001, 7.529821e+000, -3.453009e+000, 6.419637e-001, 3.703529e-001, -1.930931e+001, -1.183954e+001, -1.322993e+001, 1.141968e+001, -3.291122e+000, 1.577911e+001, -6.662191e-001, -2.790196e+001, -9.388241e+000, -2.783654e+001, 3.030922e+001, -5.646422e-001, -8.104953e+000, -1.237830e+001, -2.508524e+001, -1.627822e+001, -1.045175e+001, 2.602535e-001, -1.267366e+000, -1.200036e+001, 1.434614e+001, 1.211837e+001, -2.897216e+000, -4.385569e+000, 7.684656e+000, 8.898359e+000, -9.960971e+000, -2.356110e+001, -5.385242e+000, -1.522012e+001, 2.618524e+000, 1.549832e+001, -1.311080e+001, -5.264975e+000, -4.799036e+000, 1.955248e+001, -1.016279e+000, -1.013157e+001, 1.003197e+001, 1.340349e+001, -2.377798e+000, -1.335651e+001, -1.366881e+001, 1.390378e+001, 3.871704e+000, 6.455947e+000, 3.825178e-001, 1.134567e+000, 7.953094e+000, 6.422788e+000, 6.449266e+000, -2.336718e-001, 1.259484e+001, 3.903500e-001, 4.116808e+000, 1.039148e+001, -4.138839e+000, 4.361376e+000, 8.242518e+000, -7.605503e+000, -7.508425e+000, 1.768900e+001, 1.896609e+001, 1.716085e+001, 3.787716e+000, -8.402074e+000, -2.318821e+001, 1.085930e+000, -9.108097e+000, -6.654408e-001, 1.304914e+001, 2.449536e+001, -2.487304e+001, -1.264461e+001, -1.405231e+001, 1.600165e+001, -1.063371e+000, 2.334103e+001, 2.139025e+001, -1.729345e+001, 5.415508e+000, 3.660873e+001, -6.230758e+000, 2.348240e+001, -6.173222e+000, -7.566903e+000, 2.187274e+001, -4.124295e+000, -9.438197e+000, 8.836146e-001, -2.658319e+001, 9.436837e+000, -1.727617e+001, -2.249075e+001, -1.129782e-001, 6.003281e-002, 3.062811e+001, 1.477892e+001, -1.924909e+000, -2.704408e+001, -2.438639e+001, -5.338670e+000, -9.345062e+000, -7.298817e-001, -2.093739e+001, -4.078497e+000, -1.057698e+001, 9.366712e+000, -1.225174e+001, -1.310778e-001, 1.634592e+001, -2.032136e+000, -7.645982e+000, 2.903821e+001, -5.615602e-001, -2.285662e-002, -2.992647e+001, -5.380266e+000, 1.816667e+001, -2.459234e+001, -1.994463e+000, -3.627945e+000, -4.436320e+000, -1.216030e+001, 1.726777e+001, 1.645065e+001, 1.093909e+001, 5.266370e+000, -5.631138e+000, -1.380467e+001, 1.919422e+001, 4.363675e+000, -1.061232e-001, 4.716287e+000, -4.699492e+000, -1.714074e+001, -3.136539e+001, -7.175199e+000, -3.045254e+001, 1.006675e+001, -1.276528e+001, 1.797362e+001, -1.548224e+001, -3.881339e+000, 5.021084e+000, 1.738812e+001, -1.708323e+001, 3.583872e+001, -2.158917e+001, 7.816276e+000, 1.904232e+001, -1.696614e+001, 4.512376e+000, 1.720353e+001, 1.879961e+001, -8.192775e+000, -8.231431e+000, 1.098144e+001, 1.115800e+001, 1.299284e+001, 1.932255e+001, -2.054045e+001, -9.966410e+000, -3.702880e-001, -1.041815e+001, -1.774806e+001, 2.428923e+001, 2.104492e+001, -1.624049e+001, 1.874191e+001, -2.788134e+001, 1.605315e+001, 1.049908e+001, -8.102746e+000, 2.238138e+000, 7.669286e-001, -1.733216e+001, -1.203475e+001, 1.816777e+001, -6.225450e-001, 1.365365e+001, -3.886703e+001, 1.027895e+001, 1.406170e+001, -6.221823e+000, 5.632635e+000, 1.350366e+001, 6.938712e+000, -1.167944e+000, -2.865716e+000, 1.155494e+001, -5.547831e+000, 3.505082e+000, 4.276891e+000, 1.738415e+001, -1.030912e+001, 3.704611e+000, -1.622884e+001, 1.616463e+001, -2.381125e+001, -7.540311e+000, 1.525995e+001, -1.048009e+001, 1.801281e+001, 1.691552e+001, -5.688872e+000, 4.737082e-001, 3.519287e+000, 1.917976e+001, -8.333623e+000, 2.280989e+000, 2.144534e+000, -8.293414e+000, 9.358032e+000, 2.135874e+000, -1.750914e+001, -2.133336e+001, 4.865427e+000, -6.640252e+000, 1.492559e+001, -9.155112e+000, 2.101156e+000, -3.150677e+000, -8.929041e-001, 3.739111e+000, 1.544118e+001, -


© ISO/IEC 2004 — All rights reserved

Copyright International Organization for Standardization
Provided by IHS under license with ISO
No reproduction or networking permitted without license from IHS
Not for Resale

7.065748e+000, -1.562462e+001, 2.023878e+001, -1.056902e+001, 1.624849e+001, 1.864284e+000, 1.474804e+001, -1.811520e+001, -1.103480e+001, -3.372703e+001, -1.869228e+001, 1.022252e+001, 9.922328e+000, -2.439423e+001, -4.838340e-001, 1.011732e+001, 3.498391e+000, -8.459188e+000, 1.435311e+001, 5.334516e+000, 1.126192e+001, 1.822220e+001, -2.227320e+001, 4.855845e+000, 1.271565e+001, -2.196977e+001, -1.456316e+001, 2.219853e+000, 9.973306e+000, -1.861365e+000, -6.796256e+000, 1.452577e+001, 2.101669e+001, -1.200254e+001, 1.058337e+001, 7.684807e+000, 1.557310e+001, -5.005416e+000, -2.497679e+001, 2.956319e+000, 1.217256e+001, -1.600614e+000, 5.610834e+000, 1.419177e+001, 1.346835e+001, -2.584331e+000, 8.316470e+000, -4.608676e+000, 1.063336e+001, 1.444068e+001, -7.894121e+000, 9.696361e+000, 6.143699e+000, -9.975385e-001, 1.337749e+001, 7.686965e+000, 5.770779e+000, -1.730327e+001, 4.998504e+000, -2.230147e+000, 1.628515e+000, 6.119735e+000, -4.803438e+000, 2.811404e+000, -1.735416e+000, -6.338230e+000, 1.139520e+000, -1.035465e+000, 6.838003e+000, -4.420371e+000, 3.055537e+000, 1.430600e+001, 5.047605e+000, -1.953288e+001, 1.120248e+001, -9.830749e-001, -7.423566e-001, 4.393271e+000, 1.923273e+001, -9.097279e+000, -1.854812e-001, -1.641044e+000, 4.061591e-001, 6.116826e+000, 1.098530e+001, 1.021866e+000, 2.011236e+000, 1.339577e+001, 1.700968e+001, -4.739715e+000, 3.634171e+000, 4.034801e+000, -6.944453e+000, 6.679272e+000, 3.533189e-001, 1.517907e+001, 2.397054e+000, -1.445011e+001, -6.686054e+000, 1.222030e+001, 8.840964e+000, -3.383309e+000, 2.124370e+000, 5.409867e+000, -7.831240e+000, -1.688329e+000, 4.117238e+000, -8.211490e+000, 1.201886e+001},
{1.757891e+001, 1.319226e+001, -3.530922e+001, -1.873797e+001, 6.150885e+000, 1.754104e+001, 1.466426e+001, -2.144161e+001, -2.258481e+000, -7.795923e+000, -1.204363e+000, -2.339712e+001, -6.480395e+000, 1.078950e+001, -6.769393e+000, 3.581578e+001, 2.551484e+001, -2.010604e+000, 2.779171e+001, 1.349913e+001, -1.767286e+001, -1.141920e+001, 1.462549e+001, -2.166838e+001, 8.085980e+000, 1.652881e+001, -8.314971e+000, -1.258620e+001, 1.403044e+001, -1.435768e+000, -2.056031e+001, -1.804604e+001, -2.276152e+001, 1.387687e+001, -3.316942e+000, 1.226079e+001, -4.132620e+000, 1.860405e+001, 2.023463e+001, 1.773205e-001, -1.550525e+001, 1.375262e+001, 1.316030e+000, -2.709363e+000, 1.140157e+000, -1.772079e+001, 2.446631e+000, 3.422115e+000, -3.335035e+000, 1.715570e+001, 1.327216e-001, 2.356274e+000, -2.670250e+000, -7.058649e+000, -1.027725e+001, 2.216025e+000, -5.348501e+000, 7.613446e+000, -1.538583e+001, 1.623750e+001, -4.973411e+000, 4.169385e+000, 1.226761e+000, 1.372361e+001, 2.279821e+000, -5.938798e+000, -2.301928e+000, 2.001386e+000, -6.417856e+000, 9.609640e+000, -5.114729e+000, 1.029789e+001, 3.503092e+000, 3.950169e+000, -2.059675e+001, -1.238435e+001, -8.010008e+000, 2.780743e+000, 7.794939e+000, 1.937785e+000, -1.228579e+001, 1.243989e+000, 1.091779e+001, -2.306143e+001, -1.387658e+001, -2.423861e+001, -5.432515e+000, 1.842179e+001, -1.575852e+001, -2.122875e+001, -1.132848e+001, 6.791479e+000, -9.237475e+000, 2.417460e+001, 2.310297e+001, 2.774072e+001, 2.683464e+001, -7.281706e-001, 1.694039e+001, 2.907919e+001, -1.603290e+000, -1.210438e+001, -3.216468e+000, -3.288918e+000, 3.234544e+001, 1.897840e+001, -7.944237e+000, -2.016326e+001, 1.977885e+001, -3.102433e+001, 1.743148e+001, 5.380347e+001, -2.103548e+001, 1.506018e+001, -2.702535e+001, 7.028151e+000, -1.863093e+001, -1.935234e+001, 8.145430e+000, -1.323870e+001, -1.892814e+000, -6.149700e+000, -1.017863e+001, -2.065824e+000, 1.518058e+001, -1.348990e+001, -2.080613e+001, -1.406787e+000, 1.179533e+000, -1.357664e+001, 2.032532e+001, 2.425020e+001, -6.402750e+000, -1.315205e+000, 1.446140e+001, 8.520760e+000, 6.075675e+000, -1.926330e+000, 2.638065e+000, 7.981083e+000, 9.624330e+000, 1.986360e+000, -1.200847e+001, 4.025370e+000, 9.891354e+000, -1.959738e+001, -1.448675e+001, -1.011918e+001, 9.332077e+000, -1.546644e+001, 7.063536e-001, -2.974938e+000, 3.036880e+001, 9.686708e+000, -3.494412e+001, 4.609379e+000, -6.687764e+000, -4.458099e+000, -6.123280e+000, -6.747418e+000, -1.659705e+001, 5.629927e+000, -2.994370e+001, -2.881302e+001, -2.258235e+001, -1.223557e+001, -1.188244e+001, -1.813300e+001, 1.180781e+001, 9.843799e+000, -5.201264e+001, -6.334710e+000, -6.018918e+000, 1.147952e+001, 3.278791e+001, 2.118373e-002, -2.498983e+001, 1.080051e+001, -7.450302e+000, 7.542713e+000, 4.547820e+000, -6.558407e+000, 1.343370e+000, -2.764273e+001, 5.111978e+000, -1.603131e+001, -7.161864e+000, 1.560273e+001, 9.641694e+000, 8.023932e+000, -1.402181e+001, 1.327609e+001, -2.958573e+000, 1.995223e+001, 1.923856e+000, -6.475079e+000, -7.231237e+000, 9.497253e+000, 3.753975e+000, 2.476085e+001, 2.504663e+001, 2.905966e+000, 2.225078e+001, -7.862268e+000, 1.998724e+000, -7.417288e+000, -5.597261e+000, -3.389696e+000, -8.023615e+000, 4.994145e+000, 7.000738e-001, -4.059583e+000, -1.622567e+001, -2.217569e+001, -9.849575e+000, -1.753961e+000, -6.217893e+000, 4.489935e+000, 2.909788e+000, 6.826311e+000, -1.333130e+001, -2.223083e+000, 1.220345e+001, 1.229835e+001, -7.340339e+000, 4.443207e+000, -1.656445e+001, -4.088732e+000, 1.020179e+001, -4.204390e+000, -2.294038e+001, 7.725564e-002, 7.183229e-001, -8.114498e+000, -1.397410e+000, -1.081690e+001, 1.352709e+001, 2.023319e+001, -1.716258e+001, -8.658439e+000, -

© ISO/IEC 2004 — All rights reserved


Copyright International Organization for Standardization
Provided by IHS under license with ISO
No reproduction or networking permitted without license from IHS
Not for Resale

5.151086e+000, 1.458065e+001, 3.514527e+000, -9.423435e+000, 1.089195e+001, 1.615894e+001, 2.374978e+000, 9.158955e+000, -1.344075e+000, 2.315220e+000, 7.251306e+000, -5.995077e+000, -3.687722e+000, -2.486279e+000, 5.126498e+000, 5.206324e+000, 1.178917e+001, -2.750412e+000, -2.656521e+000, 2.505489e+001, -1.092667e+001, 1.449741e+001, 1.716911e+001, 6.034633e+000, 5.817755e-002, 1.587621e-001, -1.426083e+000, -1.471597e+001, -4.718899e+000, 2.233585e+000, 2.617932e+001, -4.854339e+000, -1.779963e+001, 6.065214e+000, 7.056237e+000, -9.242942e+000, -1.127714e+001, 1.606627e+001, -5.427368e+000, 1.116094e+001, -6.450932e+000, 2.876347e+000, -1.403039e+001, -1.590320e+001, 8.213859e+000, 5.743940e+000, -1.323233e+001, -5.430224e+000, -5.978014e+000, 4.714934e+000, -1.595603e+001, -5.439898e+000, -7.700795e+000, -9.690176e+000, -6.390538e+000, -5.070658e+000, 4.591950e+000, -3.077732e+000, -2.150770e+000, -5.252109e+000, 2.782468e-001, 6.363518e+000, 8.723397e-001, -5.659652e+000, -7.603074e-001, 4.274338e+000, -4.651764e+000, 1.560356e+001, 9.939310e-001, -8.185442e-001, -2.130209e+001, -1.590958e+001, 5.211109e+000, -1.129480e+001, -4.880606e+000, -7.076370e+000, 9.998406e+000, -7.108771e-002, 1.987116e+001, 1.984393e+001, 1.567933e+000, 8.680518e+000, -2.548827e+001, -1.657415e+001, 1.135689e+001, -1.681733e+000, 6.992414e+000, 7.408820e+000, 9.320244e+000, 1.026593e+001, -1.413475e+001, 4.887832e+000, -4.597350e-001, -1.052044e+001, -1.351230e+001, 4.418762e+000, -1.022964e+001, -1.685025e+000, 1.656546e+001, -7.558862e-001, -1.412754e+001, -1.079666e-001, 9.821135e+000, -3.728660e-001, -8.544526e+000, 4.410606e+000, -1.057038e+000, 6.965896e+000, 4.197121e+000, -2.465268e+000},
{-1.263564e+001, 1.456258e+001, 3.796916e+000, -4.668794e+000, 4.905963e+000, -2.861558e+001, -1.606990e+001, 1.884197e+001, -1.222549e+001, 1.400128e+001, -4.802815e+000, 1.301873e+001, 2.050455e+001, -1.642421e+001, 2.179112e+001, -1.809301e+001, 8.926995e+000, -2.133028e+001, -2.842549e+001, 3.476209e+000, 1.200671e-001, -3.098449e+001, -1.983721e+001, -2.023803e+001, 1.145622e+001, 2.420882e+000, -2.550110e+001, 3.025039e+000, 6.945140e+000, 7.540324e-002, -2.102578e+001, 4.288607e+000, 6.689382e+000, -2.963055e+001, -1.852339e+001, -7.985257e+000, 2.297363e+001, 1.865675e-001, 1.475834e+001, 5.401449e+000, 1.604045e+001, 3.059716e+000, -1.174133e+001, -2.887436e+001, 1.212632e+001, 1.528302e+001, 1.055036e+001, 2.382026e+000, -2.149252e+001, -8.881435e+000, 7.651385e+000, 1.192005e+001, 6.943238e+000, 5.177239e-002, 9.165243e+000, -2.174104e+000, -2.432078e+001, 4.927061e+000, -4.055964e+000, -1.885348e+001, 3.547501e+000, -1.173393e+001, -5.823227e+000, 3.178033e+000, 6.352277e+000, 5.854522e+000, 5.760762e+000, 4.698614e+000, 4.676236e+000, -2.353456e+000, -8.804258e+000, 1.249591e+000, 1.427397e+001, 8.875748e+000, 8.546537e+000, -1.129199e+001, 1.170979e+000, -2.896423e+000, -9.907574e-001, -3.550868e+000, -2.742420e+000, 9.518746e+000, 5.322372e+000, 1.982507e+001, -1.646834e+001, 7.327589e+000, -4.107090e+000, -1.292067e+001, 4.862690e+000, 2.043914e+001, -2.763098e+000, -4.586891e+000, 1.050349e+001, 2.789320e+001, 6.567457e-001, 1.001812e+001, -3.282319e+001, 1.501296e+001, 2.055254e+000, 4.931918e+000, 2.542577e+001, 3.763247e+001, -7.024940e-002, 1.388011e+001, 1.099595e+000, 4.028298e+001, -1.863800e+000, -9.491462e+000, 1.709608e+001, 1.412389e+000, -2.404150e+001, 1.939428e+001, -4.527440e+000, 1.479417e+001, -5.767288e+000, 7.762265e+000, -9.328061e+000, -4.837634e+001, -5.002909e+000, 4.381357e+000, 1.365084e+001, -1.246342e+001, 4.031489e+001, 1.658654e+001, 9.561849e+000, -3.583690e+000, 3.079622e+001, -4.381715e+000, 4.623828e+000, -1.203812e+001, -1.247156e+001, 1.965831e+000, 1.451331e+001, 7.279359e+000, -3.617666e-001, 1.363975e+001, -6.796845e+000, 6.374945e+000, -1.258177e+001, -1.383953e+001, -1.755987e+001, 1.121510e+001, -2.457129e+000, -3.428390e+000, 6.435446e+000, 1.955987e+001, 2.270608e+001, 8.673399e+000, 1.061882e+000, 1.417942e+001, -2.212616e+001, 1.061472e+001, -1.949192e+001, -2.749249e+001, 1.883525e+001, 1.220207e+001, 6.066619e+000, 2.081529e+001, -7.156251e+000, 2.102872e+001, 4.409386e+001, 1.723572e+001, 2.863374e+001, 4.405071e+001, -3.002211e+001, -8.900696e+000, -1.350627e+001, -3.004639e+001, 1.472107e+001, -2.820991e+001, 3.871523e+001, 8.031491e+000, 4.530950e+001, 1.934674e+001, 1.565103e+001, -9.866311e+000, -1.590369e+001, -1.437084e+001, -3.453111e+001, 1.700364e+001, -7.026144e+000, -2.310159e+001, 1.907080e+000, 2.691271e+001, -8.258056e-001, -2.003087e+001, -4.925717e+000, 7.595998e+000, -2.178222e+001, 1.884724e+001, -2.557347e+001, -2.537744e+000, -1.804196e+000, 1.013967e+001, 1.038751e+000, -2.133472e+001, 2.332759e+001, 5.914881e-001, -1.960342e+001, -4.437092e+000, -2.505938e+001, -1.167596e+001, -1.369187e+000, -7.151315e+000, -3.414470e+000, 1.221491e+001, -1.357354e+001, -1.496761e-001, -2.236999e+001, 8.192719e+000, -1.963676e+001, 4.535894e-001, 1.515969e+001, -4.838152e+000, 3.633839e+001, -1.579499e+001, -2.098589e+001, 2.453921e+000, -6.651964e+000, -1.313162e+001, 6.976164e+000, -9.187383e+000, -3.291397e+000, 1.483982e+001, 1.958252e+000, 1.568758e+000, -1.305918e+000, 1.229181e+001, -4.734707e+000, 6.729126e+000, 2.710022e+001, 6.905402e+000, -2.819696e+000, -1.099050e+001, 2.974084e+001, 1.673161e+001, -7.936935e+000, -1.356923e+000, -2.237988e-002, 3.187809e+001, 8.283459e+000, 1.122241e+001, 9.601889e+000, -3.867411e+000, 1.185591e+001,


© ISO/IEC 2004 — All rights reserved

Copyright International Organization for Standardization
Provided by IHS under license with ISO
No reproduction or networking permitted without license from IHS
Not for Resale

2.398661e+000, -2.198973e+001, 1.156877e+001, -2.414093e+001, 1.473266e+001, -1.388734e+001, 8.314587e+000, -1.285178e+001, 2.378046e+001, -5.660977e+000, 8.222932e+000, -8.299837e+000, 2.006551e+000, 4.404236e+000, -1.686009e+000, 9.208566e+000, 4.048863e+000, 1.667089e+001, -1.272480e+001, -1.129837e+001, -7.568106e+000, 1.412239e+001, -1.464210e+001, -2.990615e+000, 1.285578e+001, 5.368549e+000, -1.478510e+001, -1.256706e+001, 1.543775e+001, 1.693715e+001, 2.319327e+001, 2.027029e+000, 1.323378e+001, -1.020426e+000, -2.521918e+000, 4.593719e+000, 1.800502e+000, -1.275922e+001, 2.812484e+000, -4.302410e-002, -6.641742e+000, 2.620851e+000, 2.963850e+000, 4.116064e+000, 9.515357e+000, 2.708126e+000, -1.110981e+001, -1.633831e+000, 6.115186e-001, 1.830677e+001, -3.212911e+000, -7.904861e+000, 9.691298e+000, -1.365274e+001, -4.416719e-001, -1.548671e+001, 7.285749e+000, -4.203195e+000, -1.896653e+001, -8.922020e+000, -5.413935e+000, -1.297389e+000, -5.223504e+000, -1.173010e+001, -2.040073e+000, 1.234616e+000, -1.603959e+000, -1.054081e+001, 1.348666e+000, 3.175190e+001, -1.537414e+001, -1.921297e+000, -2.783086e+000, 1.408645e+000, 1.761733e+000, 2.254748e-001, -1.852014e+001, -2.028364e+001, -2.268882e+001, -5.135281e+000, -6.806599e+000, -7.729013e+000, 5.622706e+000, 8.852111e+000, -3.526804e+000, -6.106302e+000, 9.054123e+000, 1.688837e+001, -2.294784e+000, -3.144190e+000, -2.031184e+001, -4.995289e+000, -1.600389e+001, 1.535000e+000, -1.645159e+000, 1.311067e+001, 8.034158e+000, 3.544201e+000, 1.601887e+001, 9.012790e+000, 1.154574e+001, 4.998975e+000, -7.269636e+000, 4.562039e+000, 2.295010e+000},

{-1.957603e+000, 2.948695e+000, 5.973298e+000, 7.687323e+000, -3.096715e+000, 3.226890e+000, -1.370717e+001, 6.946407e+000, -1.190990e+001, 8.874444e+000, -1.034612e+000, -1.877665e+001, -4.777165e+000, -2.092965e+001, -6.360767e+000, -3.870228e+000, 7.378540e+000, 8.690951e+000, -2.343349e+000, -2.018191e+001, -9.916641e+000, 2.054492e+001, -1.208253e+001, 9.060768e+000, -1.418050e+001, 6.930205e+000, -1.049428e+000, -1.997737e+001, 4.732157e+000, -5.537249e+000, 1.398318e+001, 1.221693e+001, 1.407553e+001, 4.735191e+000, 4.272612e+000, -1.086137e+001, -9.042281e+000, -1.317173e+001, -1.061765e+001, -7.578555e+000, 1.055069e+001, -1.399038e+001, 1.603522e+001, -1.189450e+001, 1.686592e+001, 3.995220e-001, 6.413091e+000, -8.130996e+000, -3.607662e+000, -9.370712e-001, -1.857542e+001, -5.905449e-001, -1.475119e+000, 8.306729e+000, 4.641646e+000, 1.688433e+001, 1.212965e+001, 4.040242e+000, -2.134526e+001, 9.954007e+000, -6.986395e+000, -1.212855e+001, 4.162023e-001, 7.556762e+000, 2.726288e+000, 9.818119e+000, -7.444022e+000, -3.129366e+000, 1.209746e+001, -1.581759e+001, 5.385802e+000, -7.720731e+000, -5.137269e+000, 1.555277e+001, -9.088650e-001, 2.678149e+000, -4.774922e+000, -1.744763e+001, 2.078332e-001, 2.901359e-001, 5.155740e+000, 1.946094e+000, -5.708658e+000, 1.517740e+000, -5.434694e+000, 1.078010e+001, -8.703426e+000, 2.250040e+001, -1.638751e+000, -2.059730e+001, -1.883275e+001, -5.929285e+000, -8.030268e+000, -6.247709e+000, -2.163904e+001, -1.054836e+001, 3.470461e+001, 4.142457e+000, 2.255764e+001, 1.720118e+001, -1.176913e+001, -6.941939e-002, -3.607819e+000, -1.559587e+001, 1.954699e+000, 4.373752e+000, -8.325063e+000, -7.272940e+000, 3.246371e+001, 2.816837e+001, 1.371049e+001, -2.113001e+000, 8.554453e+000, -6.265014e+000, 2.544695e+001, 4.138229e+001, 4.020968e+001, 1.447251e+001, -4.585091e+001, 8.261620e+000, 2.147314e+000, -2.702481e+001, 8.302324e+000, -7.372753e+000, 4.398707e+000, 3.007013e+001, 1.333244e+001, 1.586821e+001, 1.073486e+001, -4.785393e+000, -2.737766e+001, 1.689880e+001, 9.046954e+000, -2.159639e+001, 9.873403e+000, -5.013146e+000, 1.049009e+000, -1.022566e+001, 1.448407e+000, 1.392826e+000, 1.690875e+001, -2.369185e+001, -1.224337e+001, -8.396208e-001, -4.235506e-001, 3.942698e+000, 3.266215e+001, -8.336040e+000, -6.929696e-001, 7.694627e-001, -1.198414e+001, 4.384804e+001, 1.437274e+001, 1.680881e+001, -2.189579e+001, -2.212482e+001, 3.251067e+001, 2.221379e+001, -5.493391e-001, 6.669232e+000, -6.244600e+000, -1.970952e-001, 8.456767e+000, 2.575874e+001, -1.783875e+001, -1.316417e+001, 4.667101e+000, -2.498272e+001, -2.405495e+001, 1.461436e+001, -1.335547e+001, -2.369944e+001, -1.016419e+001, 1.318603e+001, -1.229149e+001, 3.785853e+001, 3.456535e+001, -9.283936e+000, -3.517977e+000, 8.950425e+000, 1.360872e+001, -1.520230e+000, -5.278642e+000, 5.432249e-001, 1.155015e+001, 1.341296e+001, -6.674046e+000, -3.597517e+000, -5.713998e+000, 7.914469e+000, -1.508464e+001, 1.206816e+001, -1.113643e+001, 1.279678e+000, -2.877863e-001, 1.323604e+001, 2.523300e+001, -3.101465e+000, -1.712479e+000, 1.161799e+001, -1.192129e+001, -5.249094e+000, 1.888721e+001, -1.495692e+001, -5.073373e+000, -1.058018e+001, 1.753538e+001, 1.982107e+001, -2.815488e+000, 1.242150e+001, 9.804269e+000, 1.416532e+000, 1.281599e+001, -1.289482e+001, -1.016027e+001, 3.559265e+000, 6.425016e+000, 4.815305e+000, -4.385025e+000, 1.243320e+001, 1.175530e+001, 2.010416e+001, -1.917357e+001, -4.239106e+000, -8.524889e+000, -4.555201e+000, -2.114334e+001, -3.622515e+000, 6.075521e+000, 4.815609e+000, 2.874113e+001, 1.403664e+001, -1.699039e+001, -4.613060e+000, -5.902064e+000, 4.448317e+000, -1.499256e+001, 2.033609e+001, -4.964830e+000, 2.854563e+001, 1.121720e+001, -4.792510e+000, 9.094676e+000, -

© ISO/IEC 2004 — All rights reserved


--`,,```,,,,````-`-`,,`,,`,`,,`---

Copyright International Organization for Standardization
Provided by IHS under license with ISO
No reproduction or networking permitted without license from IHS
Not for Resale

1.308817e+001, -8.401374e+000, 1.277320e+001, -1.316095e+001, 1.115533e+001, 1.189551e+001, 1.294030e+001, -
6.060191e+000, -4.664657e+000, 1.240031e+001, -1.827249e+001, 9.806782e+000, -8.118139e+000, 5.233953e-001, -
6.618967e+000, -1.320675e+001, -2.691125e+001, -9.041148e+000, -4.993702e+000, -7.388852e+000, -1.190206e+001, -
8.977673e+000, -8.995823e+000, -1.259167e+001, 9.026936e+000, -5.324986e+000, -1.274344e+000, 8.962483e+000,
3.413316e+000, -9.059129e+000, -3.503356e+000, 3.141896e+000, 1.206084e+001, -6.985740e+000, -1.565826e+001,
1.384860e+001, -4.213130e+000, -1.242030e+001, -3.822680e+000, 1.116399e+000, 8.074839e+000, -4.879740e+000,
1.226234e+001, 8.927747e+000, -1.216103e+001, 1.457431e+000, 5.284317e+000, 1.133752e+001, -5.225736e+000, -
6.452766e+000, 1.541289e+000, -1.299753e+001, -1.573489e+001, -1.191248e+000, 5.066529e+000, 1.256316e+001,
4.731808e+000, -1.619678e+000, -1.303106e+001, 1.941646e+001, 1.516390e+000, 1.437458e+001, -5.234672e-001, -
4.815441e+000, -1.916302e+000, 4.163360e+000, 3.024836e+000, -8.667698e-001, 1.463592e+001, -7.259084e-001, -4.464718e+000,
1.608892e+001, -4.637883e+000, 4.405812e+000, -2.769153e+000, -1.233572e+001, -1.748656e+001, -1.189262e-001, 1.467218e-
001, -5.838296e+000, -2.677100e+001, -4.806197e+000, -4.795810e+000, -2.413211e+001, -1.538808e+001, -2.122583e+000, -
1.063810e+001, 2.509332e+000, 5.320210e+000, -2.457373e+001, 1.591980e+000, 2.215396e+000, -2.528999e-001, 1.568597e+001,
-7.672194e+000, -1.247324e+001, 3.932141e+000, -1.535587e+000, -6.733400e+000, -7.186078e+000, 5.640887e+000,
3.620675e+000, 1.501259e+001, -2.831678e+000, -5.932355e+000, 3.126257e+000, 7.510165e+000},
{1.540782e+001, -5.513592e+000, -1.165146e+001, -1.029554e+001, -2.417021e+001, 9.207486e+000, -2.238751e+001, -
2.431515e+001, -2.238933e+001, -2.907151e+001, 2.558062e+000, -1.270673e+001, 7.872386e+000, -3.699340e+000, -
2.577291e+001, 4.218016e+000, -1.744098e+000, 9.501790e+000, 4.297491e+000, -4.996433e+000, -4.897283e-001, -
2.877178e+001, 1.220864e+001, -1.197491e+001, 1.300620e+001, -2.558967e+001, -8.531884e+000, 1.790922e+001, -
1.439389e+001, -5.947741e+000, -1.194024e+001, -1.100751e+001, -2.389744e+001, 1.151637e+000, 9.786064e+000,
5.686236e+000, -1.466793e+001, -5.232727e+000, 8.276003e+000, -9.728612e+000, 3.006538e+000, 3.653571e+000,
1.831500e+001, 1.313950e+001, 1.758559e+001, -9.750096e+000, -1.446951e+001, 8.012327e+000, -6.303543e+000,
6.921950e+000, -1.399985e+000, 4.626362e+000, -2.028940e+000, 1.220516e+001, -1.759417e+000, 2.385498e+000, -
7.062908e+000, -5.004053e+000, -8.626186e+000, 1.052311e+001, -3.391895e+000, 1.111279e+001, 5.851648e+000, -
1.831490e+000, -1.336671e+000, 9.260457e+000, 7.340949e+000, -4.895761e+000, 1.216577e+000, -2.158752e+000,
3.170771e+000, -1.314118e+000, -3.779777e+000, 2.702823e+000, 8.988687e-001, 1.034492e+001, -1.560327e+001, -
3.782175e+000, 6.068785e-001, 1.143111e+000, 1.259209e+000, -7.401549e+000, 3.953730e+000, -1.894556e+001, -1.458689e+001,
-6.787986e+000, 1.323529e+001, 2.671527e+000, -7.191944e+000, -1.604055e+001, 5.781788e+000, 1.691830e+001,
2.291086e+001, 3.478347e+001, -1.541442e+001, -6.068605e+000, -3.636977e+001, 1.054506e+001, 9.822045e-002, -
3.819851e+001, 2.469596e-001, 2.733745e+001, -2.733721e+001, -3.153197e+001, -1.575747e+001, 1.649421e+001, -
1.035961e+001, -3.593695e+001, 2.032374e+001, -1.661771e+001, 3.598392e+001, -3.817458e+001, -1.689928e+000, -
7.639241e+000, -2.185936e+001, 2.902713e+001, 4.827813e+000, 2.461757e+001, 8.878632e+000, 1.399121e+001, 4.809712e+000,
5.839022e+000, 6.200894e-002, -1.139475e+001, -4.877257e+000, -2.371717e+001, 1.805770e+001, -1.996755e+000,
1.488633e+001, -4.720562e+000, -2.566139e+000, -8.094877e+000, -1.593829e+001, 6.054290e+000, -2.132660e+001, -
2.875375e+001, -4.465500e+001, 1.649638e-001, -1.561927e+001, 4.944863e+000, 1.612702e+000, -1.052173e+001, 2.152022e+001,
1.889782e+001, 1.792323e+000, -1.871054e+000, -1.080590e+001, 4.148430e+000, 3.612093e+000, 1.279670e+001, 5.637893e+000,
4.281941e-001, 2.343383e+001, -7.432517e+000, -2.556528e+001, -1.623830e+001, -9.276482e+000, 1.338371e+001, -
1.825372e+000, 6.718266e+000, 1.179475e+001, 1.598331e+001, 2.452752e+001, 7.537953e-001, -9.178081e+000, -6.489426e+000,
5.483765e+000, 1.379464e+001, -8.160146e+000, 7.262489e+000, -1.232128e+001, -1.167212e+001, -1.608901e+001, -
6.674392e+000, -2.685747e+001, 3.886696e+001, -1.298240e+001, -4.663990e+000, 1.235800e+001, -1.873071e+001,
1.118147e+001, 3.887722e+001, 1.330026e+001, 5.048575e-001, 2.060674e+001, 8.477759e-002, -3.865411e+000, -1.157389e+001,
2.072675e+001, 2.977100e-002, 7.465172e+000, 2.224558e+000, 3.607944e+000, 1.668400e+001, -6.428630e+000, 7.136284e+000,
6.440047e+000, 3.078456e+000, 6.535219e+000, 1.094835e+001, 2.723115e+000, 4.161093e+000, 2.023815e+001, -2.004246e+000,
1.222984e+001, -9.174153e+000, -1.544335e+000, 7.579882e+000, 1.458337e+001, -9.550312e+000, 2.873764e+000, -
1.323457e+001, -8.088110e+000, 1.196792e+001, -1.189291e+001, -9.296093e+000, -7.232472e-001, 6.055309e+000, -
3.727218e+000, 4.636872e+000, 8.497963e+000, 1.593271e+001, -1.272511e+000, -1.602908e+001, 1.160650e+001, 1.109876e+001,
3.454870e+000, -1.212203e+001, 9.385819e+000, 2.158268e+000, -2.997044e+001, -2.376197e+000, -4.961069e+000, -
2.462221e+001, -1.304853e+001, 2.797343e+000, -1.743830e+001, 1.071731e+001, -8.011141e+000, 3.016723e+001,


© ISO/IEC 2004 — All rights reserved
--`,,```,,,,````-`-`,,`,,`,`,,`---

Copyright International Organization for Standardization
Provided by IHS under license with ISO
No reproduction or networking permitted without license from IHS
Not for Resale

2.549964e+000, 1.026743e+001, 1.379067e+001, -2.345433e+001, 2.254138e+001, 3.366782e+000, 2.509831e+001, -7.580647e+000, 3.120588e+000, -9.502588e+000, 1.245546e+001, 8.480965e+000, 3.024118e+000, -7.615787e+000, 1.528051e+001, -4.149796e+000, 1.216151e+000, -2.938290e+000, 7.879439e+000, 2.547700e+000, -3.660842e+000, 6.101941e-001, 8.610551e+000, 6.771393e+000, 9.300601e+000, -4.458413e+000, -7.366354e+000, 1.290005e+000, 1.496582e+001, -2.047958e+000, -1.062035e+001, -3.303546e+000, -5.747288e+000, -1.687057e+000, 1.299228e+001, -2.391400e+001, -4.939551e+000, -1.179130e+001, -9.339348e+000, 3.234469e+000, -2.379206e+001, -1.092739e+001, -1.451065e+001, -4.291689e+000, -9.401555e+000, -8.222695e+000, -9.233704e+000, 9.770427e+000, 6.903017e+000, 1.309728e-001, -3.548085e+000, -3.039207e+000, 4.994854e-001, 7.825209e+000, -4.984812e-001, -6.654208e+000, -1.114407e+001, 1.653096e+001, 1.114907e+001, -1.053595e+001, -1.174050e+000, -5.068194e-002, 1.882637e+000, -3.721899e+000, 4.566369e+000, -9.941812e+000, 4.205345e-002, -2.510345e+000, 1.250696e+000, 6.388543e+000, -3.468788e+000, -1.278911e+001, -5.991477e-001, 8.457805e-002, 9.778453e-001, 1.481658e+001, -2.345734e+000, 1.039189e+001, 3.864778e+000, 6.869469e+000, -1.967127e+000, 1.467588e+001, 1.145505e+001, 4.052767e+000, 8.711422e+000, 2.071719e+000, 2.133490e+000, -1.028749e+001, -2.661533e+000, -1.320999e+001, 2.689286e-002, 6.516332e+000, -4.770894e+000, -2.037531e+000, 9.643175e+000, -9.209777e+000, -2.473590e+000, -4.646293e-001, 3.415838e+000, -4.158743e+000, -1.355705e+001, -7.355586e+000, -1.431972e+001, 1.741036e+000, 1.523817e+000, -9.887253e+000, 5.496401e+000, -2.088434e+000, -1.490495e+001, -2.421439e+000},
{-3.930470e+000, -2.842587e+001, 1.224074e+001, 1.422042e+001, -1.221694e+001, -1.190192e+001, -1.049977e+001, -6.067647e+000, 1.013858e+001, -7.131616e+000, -1.098975e+000, -1.784377e+001, 1.823694e+001, 4.420084e+000, 2.482668e+000, 5.010391e+000, -3.581492e+000, 2.207563e-001, -7.367549e+000, -5.598237e+000, -1.436075e+001, 1.091652e+001, 9.677391e-001, -2.854990e-001, -1.440445e+001, -1.370947e+001, 1.553555e+001, -1.056340e+001, -3.490991e+000, -1.477880e+001, 1.738981e+001, 2.508593e+000, 2.494008e+001, -8.571275e+000, -3.392994e+001, 7.411707e+000, -1.001977e+001, -8.161716e+000, -2.117631e+001, -4.815571e+000, 3.617498e+000, 1.655475e+001, 5.571538e+000, -2.564899e+000, 5.786500e+000, 1.875694e+000, -3.066188e+000, -2.140573e+001, 1.186175e+001, -7.364846e+000, -1.350486e+001, -1.901368e+001, -1.531933e+001, 7.696070e+000, -2.453869e+000, -7.825883e+000, 8.002918e+000, -7.700650e+000, 2.232363e-001, 3.866327e+000, -1.041311e+001, 3.218357e+000, 8.945769e-001, -8.283192e+000, -1.232516e+001, 5.066657e+000, 5.229221e-001, 3.333538e+000, 1.040212e+001, 4.637664e+000, 5.612531e+000, -3.428652e+000, -6.613713e+000, 1.793486e+001, -8.858380e+000, -8.081790e+000, -2.377796e+000, 5.097106e+000, -7.281448e+000, 4.310052e+000, 5.677521e+000, 3.225809e+000, -1.042304e+000, -7.433454e+000, -2.056150e+001, -3.908114e+000, -8.650813e-001, -8.363231e+000, 4.770412e+001, -1.099764e-001, -3.766359e+000, -8.637148e+000, -2.429341e+001, -2.350798e+001, 2.963003e+001, -9.347775e+000, 4.406641e+000, -8.782781e-001, -4.752389e+000, 2.326729e+001, -1.827356e+001, 1.313883e+001, -5.081747e+000, 9.484988e+000, -3.497967e+001, 3.617276e+000, 1.002079e+001, -5.231594e+001, -1.660792e+001, -1.103951e+001, -1.338364e+001, 5.130232e+001, -1.490714e+001, -1.044345e+001, -1.536474e+001, 4.592773e+000, -2.494831e+001, -1.350202e+001, -4.769243e-001, 2.247498e+001, -9.084755e+000, 2.751952e+000, -2.092905e+001, -1.128086e+001, -1.112148e+001, 3.534049e+001, -2.005491e+000, 1.654276e+000, -3.845442e-001, 1.411959e+001, -2.626790e-001, 3.448805e+000, -8.465930e+000, -1.493512e+001, -9.973668e+000, 1.937093e+001, 2.942267e+000, 2.364693e+000, -6.518765e+000, 1.466203e-001, -6.616045e-001, -1.446007e+001, 2.164065e+001, 4.509077e+000, -2.815247e+000, -5.287170e+000, 9.291613e+000, -3.828887e-002, 1.470421e+001, 5.323698e+000, 2.132472e+001, 2.191641e+001, -1.516762e+001, 1.964889e+001, -1.294617e+001, -4.693664e+000, 2.536549e+000, 1.962242e+000, 1.453709e+001, -8.946652e+000, 1.454373e+001, -4.652350e+001, 2.065621e+001, 3.346737e-001, -2.086642e+000, 1.442951e+001, -1.745707e+001, -5.524470e+000, -1.405632e+001, -1.893557e+000, -8.038457e+000, 1.368376e+001, 2.201320e+000, -8.048496e+000, -1.652910e+001, -4.754903e+000, 4.229007e+000, -3.099258e+000, -1.287651e+001, 1.916905e+001, -2.394664e+001, -2.906062e-001, -9.761661e+000, 1.093324e+001, 2.407141e+001, -2.154481e+001, 2.430257e+000, 1.752034e+001, 1.314769e+001, 2.944802e+000, -2.483983e+001, 1.154526e+001, 5.334506e+000, 1.704776e+001, 2.957271e+000, 2.869410e+001, -6.311475e-001, -7.508867e+000, 1.485567e+000, -9.550783e-001, 1.390441e+001, -4.014320e+000, 1.137058e+001, 7.102848e+000, -1.449495e+001, -4.079913e+000, -1.025430e+001, -3.141576e-001, 6.428909e+000, 1.207938e+001, 2.966976e+000, -7.224643e+000, -2.869187e+000, 1.200768e+001, 4.367048e+000, 1.362408e+001, -1.127595e+001, 1.579830e+001, 1.708666e+001, 9.201413e+000, 1.177766e+001, 1.048220e+001, 3.071518e+000, 3.625491e+000, 1.840464e+001, 5.227729e+000, 6.891334e+000, 1.361698e+001, -3.581054e+000, -9.721804e+000, -2.540997e+001, 1.715323e+001, 1.180918e+001, -2.162688e+001, 1.064022e+001, 5.173895e+000, 4.214557e+000, -1.227049e+001, 9.735598e-001, 4.373791e+000, 1.368178e+001, -1.365509e+000,

© ISO/IEC 2004 — All rights reserved


Copyright International Organization for Standardization
Provided by IHS under license with ISO
No reproduction or networking permitted without license from IHS
Not for Resale

-7.505592e+000, -1.036698e+001, -1.905063e+001, 1.149166e+001, -5.474984e+000, 2.025750e+001, -2.023384e-001, -4.081616e-001, -2.526864e+000, 5.478980e+000, -2.928876e+000, -1.001105e+001, -2.213868e+001, 4.917938e+000, 5.144553e+000, 6.854054e+000, 7.311641e-001, 1.186803e+001, 1.254788e+001, 7.462774e+000, 4.147979e+000, -1.626302e+001, 9.376198e+000, -2.248905e+001, -5.547140e+000, -6.450457e+000, 6.574419e+000, 2.477113e+000, 1.632456e+001, 1.715164e+001, -7.183161e+000, 4.637335e+000, 5.531077e+000, 1.629255e+000, 1.070424e+001, 8.610562e+000, 1.062243e+001, -2.088022e+000, -1.095774e+001, 7.498054e+000, 5.817649e+000, 1.805867e+000, -8.597495e-001, 1.301392e+001, 1.299232e+001, -4.758790e+000, 1.077027e+000, 3.666894e+000, -1.680809e+001, -1.181551e+001, -1.280475e+001, -6.586483e+000, 2.835927e+000, -1.272994e+001, 6.468306e-001, 3.034787e+000, -1.731831e+001, 1.162420e+001, 2.887448e+000, 1.315313e+001, -5.011402e+000, 4.318889e-001, -6.018907e+000, -9.335526e-001, -3.353874e+000, 1.648183e+001, -4.897656e-001, 6.587657e+000, -4.672100e+000, -1.871941e+001, 7.545213e+000, -1.194997e+001, 5.108087e+000, -6.520858e+000, 1.280760e+001, -6.707198e+000, -4.990722e-001, -1.775557e+001, -1.533788e+000, -1.224407e+000, -1.258122e+001, 1.305556e+001, 1.067480e+000, -8.311690e+000, 1.597902e+000, 7.373538e+000, -2.410084e+000, 1.427233e+001, -1.403485e-001, 1.934956e+001, -7.315833e+000, 4.793426e+000, -2.119883e+001, -2.527762e+000, 4.053610e+000, -8.046507e+000, -1.331965e+000, -2.843954e+000, 4.745594e+000, 8.419244e+000, 6.975099e+000, 1.111280e+001, 9.392783e+000, -7.870393e+000, -1.127170e+001, -8.448057e+000, -2.164275e+000, -2.831692e+000},
{-3.605847e+000, -1.123954e+001, -1.586862e+001, -1.386496e+001, -5.692836e+000, 1.645836e+001, 6.436134e+000, -2.825312e+001, 4.364749e+000, -2.937570e+001, 4.066596e+000, 1.671551e+001, -2.030599e+001, 6.355612e+000, 6.716947e+000, 1.116495e+001, -1.359772e+000, -4.759192e+000, 1.495356e+001, 4.676886e+000, -2.012734e+001, 7.782079e+000, -6.796425e+000, 2.202028e+001, -1.501764e+000, 1.077988e+001, 2.001698e+001, 6.923645e+000, 4.349471e+000, 1.379890e+001, 9.029338e+000, 1.702297e+001, -1.275572e+001, 5.925396e+000, -3.228321e+000, -1.207129e+001, 4.600357e+000, -4.537475e+000, -3.578639e-001, -1.312356e+001, -1.090983e+001, 2.584857e+000, 2.822052e+000, -8.380489e+000, -1.302190e+001, 7.128816e+000, -1.523218e+000, 1.256000e+001, -2.725409e+000, 2.546405e+000, -2.174800e+000, 4.396686e+000, -7.435200e-001, 1.174545e+001, 1.760799e+000, 1.784401e+001, -2.980003e+000, -1.388641e+001, -6.279363e+000, 2.981711e+000, -1.590788e+001, -1.198398e+001, 8.688831e+000, -9.174870e+000, -4.176406e+000, 6.256147e+000, -9.167701e+000, -5.622026e+000, 2.235302e+000, 4.689037e+000, -4.533657e-001, -1.452471e+000, -7.401483e+000, -6.251926e+000, -8.036834e+000, -7.242701e+000, -6.406588e+000, 9.551765e+000, 1.644532e+001, -1.431919e+000, 1.176099e+001, 5.820810e+000, 1.339645e+001, -1.698734e+001, -5.721635e-001, 5.850802e+000, -4.700339e+000, -8.062194e+000, 9.998169e+000, 2.631433e+001, 5.306520e+000, 6.617819e+000, -2.690563e+001, 1.161357e+000, -4.699986e+000, -2.242662e+000, 1.878207e+001, -2.492275e+001, 7.988043e+000, -3.735271e+000, 6.639312e+000, 1.430378e+001, 9.749170e+000, -5.837878e+000, 1.651860e+000, -1.226664e+000, 2.903557e+001, 1.787167e+001, 3.975250e+001, 1.173421e+001, -6.281047e+000, -1.233116e+001, 3.827790e+001, 4.747140e+001, 3.534725e+000, -3.259871e+001, -8.565831e+000, 1.285787e+001, 2.960725e+001, -1.417405e+001, 1.322972e+001, -4.457052e+000, 2.373820e+001, -3.168574e+001, 9.824936e+000, 2.774637e+001, -5.213713e+000, -8.948272e+000, 1.343082e+001, -3.676018e+000, -1.941086e+001, -1.657745e+000, -8.775416e+000, -4.664247e+000, 1.891114e+001, -2.128082e+000, -3.458847e+001, 4.404135e+000, -8.652990e+000, -5.554818e+000, 1.173294e+001, -1.009021e+000, -2.032611e+001, 4.208678e+000, 4.067010e-001, 6.400272e+000, -1.675247e+001, 1.697100e+001, 2.323117e+000, 9.673724e+000, 1.336971e+001, -1.927309e+001, 3.085753e+001, -2.397053e+001, -1.637719e+001, 3.087173e+001, -1.665970e+001, -4.478383e+000, -8.967303e+000, 1.840738e+001, -2.124738e+001, 1.838792e+001, -4.767084e+001, 1.168768e+001, -6.695688e+000, 3.151367e+000, 1.648493e+001, 4.998084e+000, -1.611250e+001, -1.649510e+001, 5.264197e+000, -6.857297e+000, -1.065822e+001, -3.944056e+000, 7.465325e+000, 3.514020e+001, 1.967174e+001, -9.334092e+000, 6.474874e+000, -7.786059e-002, -1.980801e+001, 2.240502e+001, 7.724397e+000, 4.318526e+000, 1.033288e+001, 1.896349e+001, 1.892798e+001, 1.796353e+001, 1.176454e+001, -3.030117e+000, 2.883522e+000, -1.033833e+001, -2.468941e+000, -3.155803e+000, -4.205337e+000, -1.521015e+001, -3.153007e+000, -9.032054e+000, -1.031720e+001, -5.205139e+000, 1.805077e+000, -2.813640e+001, 1.691074e+001, -2.516553e+001, 1.230314e+001, 1.881203e+001, -1.043572e+001, 1.028878e+001, 1.346043e+001, 2.233586e-001, 1.132809e+001, -9.169519e+000, 7.502003e+000, -1.298787e+001, -7.160121e+000, -3.778675e+000, -2.122621e+000, 2.116822e+001, 3.183546e+000, 7.858104e+000, -2.133634e-002, 1.383674e+001, -1.156034e+001, 4.633860e+000, -5.139203e+000, -8.709723e+000, -5.151778e+000, 1.856775e+000, -1.830628e+000, -1.639763e+001, -1.743921e+001, -4.949850e+000, 4.265578e+000, 2.510821e+001, 9.289545e+000, -2.422927e+001, 1.049700e+001, -3.891285e+000, 1.932366e+001, 3.847874e+000,


© ISO/IEC 2004 — All rights reserved

Copyright International Organization for Standardization
Provided by IHS under license with ISO
No reproduction or networking permitted without license from IHS
Not for Resale

-2.158699e+000, -9.009665e+000, -6.579466e+000, -1.021396e+001, -5.144151e+000, 8.744802e+000, 1.202322e+001, 2.258314e+000, -7.761258e+000, -6.037899e-001, -6.515582e-001, -4.162050e+000, -3.925090e+000, 1.189892e+001, 1.107540e+001, 4.018611e+000, -1.005255e+001, 1.445706e+001, 4.081244e+000, -7.086775e+000, -1.652946e+001, 6.828474e+000, 6.666907e+000, -8.130763e+000, -8.877437e-001, -1.055740e+000, -6.374483e+000, -4.522597e+000, -9.584569e+000, -4.305265e+000, -7.318591e+000, 8.291741e+000, 3.464423e+000, -1.161329e+001, 2.339644e+001, -1.376366e+001, 3.709725e+000, -1.561295e+001, 1.579504e+001, -5.635765e+000, 1.606370e+000, -2.398498e+001, 6.843763e+000, -1.480556e+001, -9.090543e+000, 3.066025e+000, 3.007735e-001, 6.482891e+000, -1.198528e+001, 1.030878e+001, 1.097584e+000, 9.289333e+000, 5.435712e+000, 7.964064e-001, 1.430005e+001, 1.464917e+001, 2.506308e-001, 7.132883e+000, -8.616256e+000, 4.367981e+000, -3.346583e+000, -6.939473e+000, 7.512280e+000, -1.544636e+001, -4.578850e+000, -4.875159e+000, -7.827922e+000, -8.495502e+000, 1.053682e+001, -4.990013e+000, 3.616684e+000, -9.538173e+000, 1.237640e+001, -1.228773e+001, -7.325283e+000, 9.836080e-001, -3.947293e+000, 1.403760e+001, -5.088022e+000, -1.224735e-001, 1.188085e+001, 1.119726e+001, -3.678667e-001, 2.187750e+000, 5.367067e+000, 1.974684e+000, -5.895842e+000, -7.520750e+000, -9.671996e+000, 1.056780e+001, 1.913448e+000, -1.227920e+001, -2.093393e+000, 4.929824e+000, 1.160290e+001, -1.179900e+001, -4.002525e+000, 2.727064e+000, -1.330269e+000, -2.916604e+000, 4.904172e+000, -7.226883e-002, -9.502528e+000, 9.487698e+000, -8.913595e+000, -1.840911e+000, 6.391885e+000, 4.867296e+000, 4.380905e+000, -1.007551e+001},

{-5.895420e+000, 4.855157e+001, 3.827616e-001, -1.928006e+000, 9.405282e+000, 8.882278e+000, 4.966034e+000, 3.977691e+001, 2.811273e+001, 3.363945e+000, -1.731410e+000, 4.119162e+000, 1.405757e+001, 2.842624e+000, 2.411765e+001, -9.767922e+000, -4.308501e+000, -6.193735e+000, -8.547940e+000, 2.504337e+000, -1.668851e+001, 3.030828e+000, 3.337675e+000, -2.777358e+001, -6.715271e+000, 1.375864e+001, -7.367079e-001, -3.159682e+000, 1.361164e+001, 6.868533e+000, -5.370810e+001, 1.133637e+001, -1.227860e+001, -1.255797e+001, -5.685388e+000, 2.276788e+001, 1.665319e+000, -1.288164e+001, -1.562615e+001, 5.161452e+000, 4.553988e+000, 2.762891e+000, -4.093870e+000, -1.915546e+001, -6.461649e+000, 1.144577e+000, -1.430907e+001, 1.106311e+001, -4.346157e+000, -1.812610e+000, 7.502119e+000, 5.230122e+000, 3.325125e+000, 7.488791e+000, 4.667202e-001, -1.700887e+001, 5.774757e+000, 7.310654e+000, 2.249453e+001, -1.091823e+001, 3.197349e+000, 1.888523e+001, 9.702008e-001, -1.071364e+001, 1.069868e+000, -2.258688e+000, 2.376914e+000, 2.049586e+000, 7.835259e+000, 6.889032e+000, -2.409786e+001, 1.905358e+001, 3.091900e+000, -5.850584e+000, 8.352867e+000, -2.496531e+001, -5.511433e+000, 1.337484e+000, 1.198586e-001, 7.958581e+000, -4.407243e+000, -1.908994e+000, 1.411051e+001, 1.959739e+000, 4.431155e+000, 4.894724e+000, 1.210141e+001, 3.245533e+000, -6.089006e-002, 9.669879e+000, 1.919871e+001, -6.487845e+000, -5.735474e+000, -1.221184e+001, -1.094225e+001, -1.166815e+001, -3.067101e+001, 5.316432e+000, 3.272064e+001, -1.541864e+001, 3.478262e+001, -1.305883e+001, -4.576948e+000, -1.468670e+001, -7.651512e+000, -8.236654e+000, 1.889964e+001, -2.765404e+001, -1.949042e+001, 2.218738e+001, 1.260678e+001, 2.240871e+001, 4.270227e+001, 2.273811e+001, -1.086352e+001, 5.799134e+000, -2.954712e+001, 2.405762e+001, -3.264169e+001, 3.077074e+001, 7.393249e+000, -8.518899e+000, 2.018479e+000, 4.492432e+000, -1.314805e+001, -2.997105e+001, -1.443771e+001, 4.560974e+000, -1.230759e+001, 1.157766e+001, -1.194095e+001, 1.138098e+000, -3.481514e+000, -1.912999e+001, 3.843905e+001, -3.751148e+000, 2.532932e+001, 8.404635e+000, -8.479366e+000, -5.975476e+000, -9.476475e+000, 8.906186e+000, -1.378918e+001, 7.440197e-001, -5.760827e+000, -7.990051e+000, -1.265921e+000, -1.393764e+001, -1.491183e+001, 2.661511e+000, 1.411942e+001, 1.614021e+000, -3.322948e+001, 2.523849e+001, 3.044272e+001, -8.695610e+000, -9.036122e+000, 4.473325e+000, 2.523802e+001, 1.878951e+001, 2.736012e-001, -1.710256e+001, 1.766576e+001, 1.362208e+001, 2.955394e+001, 4.993736e+000, -1.391915e+000, -1.378149e+000, -2.168347e+001, -4.649059e+000, 4.078326e+001, -7.524479e+000, -1.190981e+000, -6.469171e+000, -8.684091e+000, -1.000979e+001, 1.634581e+000, -3.064034e+000, -2.848026e+000, 1.218348e-001, 1.385097e+001, 1.125593e+001, -8.684530e+000, 1.655565e+001, -1.296563e+000, -8.082107e-003, -3.809885e+001, 9.413349e+000, 1.010368e+001, 1.167722e+001, -4.976037e+000, 1.675337e+001, 1.670189e+001, -1.002146e+001, 9.358445e+000, -3.981020e+000, 1.821094e+001, -1.943652e+001, 5.254466e+000, 4.166162e+000, -1.473997e+001, -1.333601e+001, 7.335824e-001, 1.849530e+001, 2.764037e+000, -1.495669e+001, -3.418494e+000, -6.645111e+000, -8.654472e+000, 4.608636e+000, 6.939121e+000, 1.101215e+001, 2.168558e+001, 1.353218e+001, -1.025071e+000, 1.687976e+001, -1.803065e+001, 4.819218e+000, -7.684309e+000, -1.985744e+001, -1.382186e+001, -1.090465e+001, -6.549402e+000, 1.622554e+001, -4.347537e+000, -2.047614e+001, 6.278976e-001, 4.813057e+000, -6.721087e+000, -5.750467e+000, -2.398471e+000, 1.662468e+001, -4.635960e+000, -1.402703e+001,

© ISO/IEC 2004 — All rights reserved


Copyright International Organization for Standardization
Provided by IHS under license with ISO
No reproduction or networking permitted without license from IHS
Not for Resale

4.242689e+000, -6.004727e-001, -1.141055e+001, 2.528651e+000, -2.094412e+000, 7.651732e-002, 8.647189e+000, -1.272930e+001,
1.572078e+001, 2.155515e-001, 4.929233e+000, -4.604792e+000, -3.315447e+000, -8.182891e+000, -8.962813e+000,
1.208801e+001, 3.235591e+000, 7.556889e+000, 9.333513e+000, -1.714056e+000, 1.398008e+001, -3.165097e+000, 1.681601e+001,
-1.352853e+001, -1.308992e+001, 8.057903e+000, -1.714934e+001, -3.285279e+001, 6.060598e+000, 1.159697e+001,
5.466324e+000, 3.713402e+000, 1.523009e-001, -7.918497e+000, 4.112450e+000, 3.133477e+000, -1.689734e+001, 5.150432e+000,
8.024795e+000, 8.664556e+000, -9.284717e+000, -4.819563e+000, -1.055005e+001, 1.871873e+001, -3.327087e+000, -
2.108105e+001, -1.075025e+001, -2.231915e+000, -1.344455e+001, 3.862874e+000, 1.573240e+001, -1.381210e+001, -
1.153773e+001, -1.161780e+001, -5.097410e-003, 1.160916e+001, -6.610217e+000, 8.797787e+000, -1.218714e+000, -
3.954836e+000, 1.257407e+000, -1.258404e+000, -4.345361e+000, -1.867603e+001, 9.092081e+000, -5.721356e+000,
1.791700e+001, -4.949519e+000, -6.255061e+000, 8.809000e+000, 2.167131e+000, -1.535055e+000, -5.019727e+000,
4.378378e+000, -5.166795e+000, -1.996897e+000, -6.766000e+000, 1.207332e+001, 7.635997e-001, -2.434255e+000, -
1.397132e+001, -1.957547e+000, 1.446251e+001, -8.125879e+000, -1.550119e+000, -1.158437e+000, -8.479815e+000,
3.120868e+000, 6.881697e+000, -4.891095e+000, 1.539740e-001, 2.291190e+000, 5.992917e+000, 5.854830e+000, 6.455698e-001,
2.605453e+000, 1.729319e+001, 4.817412e+000, -7.496515e+000, 1.079230e+001, 6.099415e+000, 1.219604e-001, 1.703649e+000,
1.158710e+001, -3.460128e+000, -1.524907e+001, 2.378026e+000, 5.335155e-002, 7.266954e+000, -9.234965e+000, 6.096757e+000,
2.946701e+000, -7.974388e+000, 7.562703e+000, 3.994904e+000, 4.520365e+000},
{4.874500e+000, -1.199286e+001, 1.607079e+001, -3.899831e+000, -4.236945e+000, 7.013352e+000, 1.964423e+000, -
1.566574e+001, 1.589245e+001, 7.528463e+000, -4.736425e+000, -5.551513e+000, -2.963328e+001, 6.153362e+000,
2.323955e+001, -7.157110e+000, -9.022422e+000, -2.914543e+000, 6.049132e+000, -4.959236e+000, -1.485447e+001,
1.599803e+001, -1.903061e+001, -2.647768e+000, 1.639238e+000, 4.123748e+000, 6.166785e+000, -2.406457e+001,
6.581985e+000, -5.920768e+000, -4.750004e+000, 2.233882e+001, 1.130291e+000, -5.091020e+000, -1.185076e+001, -2.462262e-
001, 1.112633e+001, -1.839395e+001, 1.050167e+001, -7.119740e+000, 2.065390e+001, -5.019942e+000, -1.421349e+001, -
7.453677e+000, -1.292502e+001, -1.105000e+001, 7.035456e+000, -9.792297e+000, 1.757461e+001, 1.391063e+001, -
2.377467e+001, -6.625184e+000, 9.235668e+000, -1.172043e+000, -6.143627e+000, -6.007222e+000, 1.554598e+001,
3.392222e+001, 5.621040e+000, -9.363306e+000, 2.115973e+000, 6.038814e+000, -1.399856e+001, 1.244036e+001, -
2.432557e+000, -1.097247e+001, 2.295884e+000, 1.555641e+000, 1.015964e+000, 6.523848e-001, -1.341312e+001, 1.973452e+001,
-7.846974e+000, -3.141782e+000, -5.753220e+000, -5.384253e-001, 1.207975e+001, 4.694945e+000, -3.286625e-001, -
1.093732e+001, -8.610207e+000, -1.411845e+001, 7.800752e+000, 1.326179e+001, -2.846077e-001, -1.204212e+001, -
1.297899e+001, -1.440527e+001, 2.366450e+001, 1.872864e+000, -1.586323e+001, -2.432222e+000, 1.827417e+001, -
9.074202e+000, -7.920281e-001, -1.058366e+001, -2.056091e+001, 3.913267e+000, -1.780267e+001, 2.470225e+001,
1.206136e+001, 1.444516e-002, 2.141404e+000, -2.710082e+001, 1.424608e+001, 1.221179e+001, 2.646032e+001, 2.293015e+001, -
7.019353e+000, -8.317954e+000, -1.807084e+001, -1.785215e+001, -2.735085e+001, 1.781986e+001, 3.841530e+001,
2.380465e+001, -2.379526e+001, -1.782140e+001, -1.226771e+001, 2.715506e+001, 1.576524e+000, 6.753334e+000,
3.499361e+001, 2.955700e+001, 2.644552e+001, 2.165432e+001, 1.479952e+000, -1.645506e+001, -2.788675e+001, -
7.521723e+000, 1.871147e+001, -2.811749e+001, -2.108151e+001, -2.076166e+000, -9.203199e-001, -2.638599e-001,
1.722019e+001, 4.404580e+000, -2.081790e+001, -4.725227e+000, 2.544716e+001, 1.460993e+001, 1.926000e+000, 5.289516e-001,
-5.402413e+000, 1.289064e+001, 1.516424e+001, -1.671696e+001, -4.118170e+000, 1.043193e+001, 3.891199e+001, -
5.978971e+000, -9.986491e+000, 1.754058e+001, -1.126818e+001, -6.557119e+000, -8.717227e+000, -4.327677e-001,
1.149960e+001, 2.377030e+001, -1.795188e+001, -1.646430e+001, 6.052177e+001, 1.865019e+000, 1.812256e+001, 2.617657e+000,
-4.408056e+001, -6.919831e+000, -6.190242e+000, 1.837520e+001, -9.850442e+000, -4.724834e+001, -2.745930e+001, -
5.415056e+000, -1.251378e+001, 2.990262e+001, -1.896106e+000, 4.631514e+000, 2.026924e+001, 1.472642e+001, 2.503483e+001,
-6.736555e+000, 2.658153e+000, -2.779986e+001, -1.471762e+001, -3.791731e+000, -1.397007e+000, 6.842998e+000,
2.501744e+001, -2.457863e+001, 9.433905e+000, 9.430981e+000, 6.154247e+000, -2.783532e-001, -7.436500e+000, 6.444669e+000,
-4.674888e+000, 1.925805e+001, -2.152640e+000, 3.526639e+000, 2.215719e+001, 9.732385e+000, 1.233533e+001, -
1.358206e+001, 4.219500e+000, -1.947821e+000, 6.779910e+000, 1.902322e+001, 1.958043e+001, -2.983144e+001, -
3.315802e+000, 3.339920e+000, 2.143904e+001, -4.659104e+000, -1.238212e+001, 1.382117e+001, 5.106701e-001, 4.857002e+000,
9.895903e+000, 1.181163e+001, 3.046749e+000, -5.681573e+000, -1.141333e+001, 3.675410e+000, 5.207492e+000, -
7.023375e+000, -1.293610e+001, 2.481189e+000, 2.738559e+000, 3.097189e-001, -1.290700e+001, -4.241055e+000, -


© ISO/IEC 2004 — All rights reserved

Copyright International Organization for Standardization
Provided by IHS under license with ISO
No reproduction or networking permitted without license from IHS
Not for Resale

6.080643e+000, 4.202720e+000, -2.348166e+001, 5.469987e+000, -2.614452e+001, 1.117435e+001, 1.309019e+001, 2.600251e+000, -2.012510e+000, 4.267808e+000, -4.881044e-001, -9.844109e+000, 1.389645e+001, 1.371877e-001, 1.170210e+001, 1.410429e+001, 1.892452e+001, 8.922699e+000, -3.969492e-001, -2.844506e+000, -1.482434e+000, -4.062233e+000, -9.103631e+000, 9.286802e+000, -6.109700e+000, -1.363904e+001, -1.215745e+001, 1.159170e+001, 2.624183e+000, 1.164827e+001, -3.175994e+000, -1.159035e+001, 1.394227e+001, 1.030434e+001, -3.869883e+000, 4.299493e+000, 1.771035e+001, 1.114919e+001, 2.220204e+001, 1.415615e+001, -5.545399e+000, -3.157105e+001, 9.302213e+000, 9.171266e+000, -1.345574e+001, 5.094474e+000, -5.371151e+000, -1.507729e+000, -3.878764e+000, 1.400030e+001, -3.598464e+000, 2.077070e+000, 4.280956e-001, -2.313657e+000, 7.206301e+000, 4.443520e+000, -1.350488e+001, -9.919742e-001, 2.144101e-002, -2.100098e+000, 3.112729e+001, 6.059290e+000, -5.817156e+000, -4.754711e+000, 1.276687e+001, -5.120901e+000, -4.034494e+000, 4.673892e+000, 1.127590e+000, -8.633184e+000, 8.581702e+000, 1.131483e+001, -1.143365e+000, 1.038847e+000, 9.275964e+000, -8.791842e+000, 2.632915e+000, 1.057758e+001, -1.408705e+001, 5.751904e+000, 1.372790e+001, -2.884844e+000, -6.598563e+000, -6.633372e+000, 9.467154e+000, 3.474629e+000, 6.016229e+000, 9.866175e+000, -6.914660e+000, 1.687115e+001, -1.140987e+001, -1.437747e+000, -5.963695e+000, -1.173630e+001, -2.110524e+000, -3.103633e+000, -4.526356e+000, 1.075877e+001, -9.576189e+000, -4.243528e+000, -2.032886e+000, -1.591811e+000, -7.132358e+000, 2.031447e+001, -1.281399e+001, -4.905519e+000, -2.820865e+000, -2.586745e+000, 3.614062e+000, -6.110805e+000, 9.119420e+000, -1.188659e+001, -6.424287e+000, 5.116737e+000, 5.291555e+000, 2.544478e+000, -3.212916e+000, -4.287108e+000},
{3.186565e+000, -9.166100e+000, 2.861523e+001, -2.362503e-001, -6.393224e+000, 4.440639e-001, -1.497285e+001, 2.223680e+001, 3.358693e+000, -4.712871e+000, 6.003901e+000, -3.105330e+001, 1.834009e+001, 1.816867e+001, -2.630967e+001, 7.817140e+000, -9.398292e+000, 2.740788e+001, 6.685618e+000, -9.375758e+000, -1.089862e+001, 4.778208e+000, -2.100239e+000, -7.070216e+000, 1.657193e+001, 1.836130e+001, -6.427154e+000, 8.949895e+000, 3.161471e+001, -6.336586e+000, -1.139863e+001, 2.442456e+000, -1.599471e+001, 3.536794e+000, -3.805765e+000, 5.640947e+000, -5.794296e+000, -2.907112e+001, 1.885594e+000, 1.802643e+001, 1.103620e+001, -7.776717e+000, -1.597614e+000, 3.298294e+000, 3.338089e+001, 5.860688e+000, -9.682836e+000, 2.948222e+000, 4.322908e+000, -1.353302e+001, -1.809989e+001, -1.293835e+001, 7.930344e+000, 6.921320e+000, 3.522556e+000, 1.869230e+001, 1.386842e+001, 5.553988e+000, 1.913812e+001, 5.158889e+000, -2.144203e+000, -1.576452e+000, -1.907125e+000, 6.077218e+000, -1.342549e+000, 7.974291e+000, 4.776688e+000, 8.006407e+000, 9.156998e+000, -5.397599e+000, 7.535405e+000, 1.482388e+001, -1.176900e+001, 9.890371e-001, -3.686817e-002, 2.759121e+000, -3.751460e+000, -4.824147e+000, -3.538754e+000, -5.066612e-001, 5.128734e+000, 1.647633e+001, -1.446194e-001, 1.182651e+000, 7.492917e+000, -3.359805e-001, -2.747085e+001, 1.398873e+001, -1.444959e+001, -3.052215e+000, 1.868224e+000, -1.506094e+001, 8.703302e+000, 6.620166e+000, 2.179235e+001, 1.054877e+001, 8.756595e+000, 1.319328e+001, 7.091970e+000, -1.459652e+001, -1.718598e+001, 2.705823e+001, 3.995288e+001, -2.052940e+001, 1.928838e+001, 7.277833e+000, 1.284621e+001, 1.532795e+001, -3.411933e+001, 1.808808e+001, -2.103544e-001, 2.197328e+001, 1.957352e+001, -1.695486e+001, 1.804523e+000, -1.542679e+001, -1.517938e+000, -1.591782e+001, -4.962121e+000, 1.678001e+001, 1.162031e+001, 1.967189e+001, 2.732596e+000, -4.954306e+001, 6.111150e+000, -1.352567e+000, 2.213103e+001, 7.933536e+000, -2.394134e+001, -9.099390e+000, -1.724078e+001, -1.236188e+001, 1.658762e+000, -2.972469e+000, -1.374581e+001, -8.054222e+000, -1.664272e+001, 2.458226e+001, 1.820354e+000, 3.496294e+001, 2.198791e+000, 1.320505e+001, -2.430776e+000, -1.228841e+001, -1.388416e+001, -5.417977e-001, -8.910448e+000, -1.296282e+001, -1.473352e+001, -8.334310e+000, 3.461687e+001, 2.133657e+001, 3.614075e+001, -1.109578e+001, -6.426773e+001, 3.987085e+000, -1.149251e+001, 3.186295e+000, -2.558538e-001, -1.008717e+001, 1.672260e+001, 1.755024e+001, -1.755787e+001, -1.348341e+001, -1.468919e+001, -1.214883e+000, -1.301455e+001, 4.943534e+000, 9.377258e+000, -1.343876e+001, 1.358842e+001, 1.484618e+001, -1.682899e+001, -2.238974e+001, -2.573953e+001, 9.629598e+000, -1.297371e+001, -2.583955e+001, -2.907155e+001, 2.045168e+000, -2.159302e+000, -1.961290e+001, 6.161208e-001, -1.706888e+001, 6.948569e+000, 2.622226e+001, -2.013199e+000, 1.548922e+001, 3.127704e+001, 5.438777e-001, 1.321170e+001, 1.054864e+001, -2.646395e+001, -1.570054e+000, 2.274966e+000, 2.700201e+001, 1.931110e+000, 4.283724e+000, -2.734930e+001, 1.276562e+000, -1.754473e+001, -4.084943e+000, -1.981138e+000, -1.218883e+001, -1.811281e+001, 3.592709e+000, -7.048157e+000, 1.161163e+001, -2.559097e+000, 1.355271e+001, 2.636033e+001, -2.369415e+000, -1.577913e+000, -2.181288e+001, -9.576967e+000, 2.802579e+001, -2.157605e+001, 1.039431e+001, -8.778711e+000, 7.678529e+000, 1.338613e+001, 1.050562e+001, 4.046923e+000, -3.020186e+001, 1.335347e+001, -1.649060e+001, -1.757246e+001, -4.165456e+000, -1.021767e+001, -7.723932e+000, 4.513159e+000, 2.869133e+001, -2.142337e+001, -1.116554e+001, 9.155379e+000, -9.110469e+000, -

© ISO/IEC 2004 — All rights reserved


Copyright International Organization for Standardization
Provided by IHS under license with ISO
No reproduction or networking permitted without license from IHS
Not for Resale

9.154873e+000, 1.518058e+001, -7.417871e+000, -5.080534e+000, -6.064651e+000, 6.819881e+000, -1.260609e+001, -
1.033002e+000, -8.069657e+000, 6.983436e+000, -9.373299e+000, -2.401665e+000, 1.053984e+001, -8.584867e+000,
2.350380e+001, 2.666105e+000, -3.184183e+000, -3.178635e-001, -1.872935e+001, 1.992632e+001, -9.478614e+000,
1.513354e+001, -6.426760e+000, 2.234925e+000, 1.623360e+000, 3.157169e+000, -8.586074e+000, -1.292747e+001,
5.208191e+000, -9.404437e+000, -3.945800e+000, 1.647851e+001, 3.134266e-001, -1.231553e+001, 1.410627e+001, 1.612822e+001,
-9.817579e+000, 2.081867e+000, -2.743105e+001, 3.823560e+000, -9.723161e+000, 3.800911e+000, -5.891805e+000, -
4.404151e+000, 3.480420e+000, -1.631638e+001, 9.905876e+000, -2.873822e+000, -7.632183e+000, -1.000994e+001,
1.800629e+001, -2.781383e+001, -2.081144e+001, 2.314962e+000, 3.629513e+000, -1.209762e+001, 2.094840e+001,
9.791299e+000, 1.121888e+000, -6.676860e+000, 4.016961e-001, 3.242100e+000, 3.886612e+000, 3.561928e+000, -2.158078e+000,
-1.704881e+001, 2.770033e+001, 1.729435e+001, 1.008189e+001, 8.183366e+000, 1.444607e+000, -2.283774e+000, -
4.504023e+000, -7.148168e+000, 3.722452e+000, -1.078576e+001, 2.368108e+001, -8.244252e+000, -2.348917e+001,
6.282280e+000, 2.435074e+001, 1.411606e+000, -6.420046e+000, -1.231860e+001, -3.657368e+000, 7.559653e+000,
1.799093e+001, -8.812985e+000, 8.241316e-001, -8.843432e+000, -1.124610e+000, 7.933200e+000, -9.159923e+000,
9.534723e+000, -1.659321e+001, -2.434005e-002, -7.024716e+000, 1.381983e+001, 2.741290e+000, 2.729750e+001, 1.211576e+001,
3.840944e+000, -2.231004e+001, 4.756246e+000, 3.484877e+000, 2.654256e-001, -4.760008e-001, -4.768366e+000, 5.219975e+000,
1.835401e+000, -2.089525e+000, 2.752526e+000, 4.974689e+000, 2.325483e+000},
{-3.790360e+000, -2.052306e+001, 2.784511e+001, 3.381899e+001, -1.482103e+001, -5.159842e+000, -3.479751e+001,
9.916335e+000, 1.714821e+001, -7.077469e+000, -4.692550e+000, 1.676250e+001, -8.185760e+000, 1.956628e+001,
5.724643e+000, 1.730656e+001, -1.092950e+001, 2.161821e+000, 1.087323e+001, -1.006956e+001, 1.297241e+001, -
5.752078e+000, 1.776027e+001, 2.847062e+001, -1.915675e+001, -7.123404e+000, -7.419496e+000, -2.909903e+000,
2.949113e+000, 1.105168e+001, 1.333672e+001, -1.119813e-001, -8.009512e-001, -5.643002e+000, -1.201235e+001, -
1.441997e+001, -1.869590e+001, -2.158840e+001, -1.000984e+001, -9.443245e+000, 2.055125e+001, -2.618914e+000,
2.824554e+001, 2.349052e+000, -3.646432e+000, 2.812952e+001, 1.101108e+001, -6.334921e+000, 1.182522e+001, 1.866577e+000,
-1.995774e+001, 7.536898e+000, 2.170812e+000, 7.158853e+000, 1.193718e+001, -2.215883e+001, 2.833751e+000, 9.343550e-001,
4.941820e-001, -3.053506e+000, -4.373155e+000, -2.043245e+000, 2.389004e+001, 6.429783e-001, -8.677035e+000, -
1.765386e+001, -1.904896e+001, -1.545448e+001, -5.401186e-001, -1.324100e+000, 2.854976e+001, 1.624883e+000, -
2.159920e+000, -3.895430e-002, -1.864417e+000, -3.170113e+000, 9.687817e-001, 6.968363e+000, 2.522964e+000, 4.571931e-001,
1.203090e+001, 1.024221e+001, 4.073412e+000, -1.763141e+001, -1.038007e+001, -5.506586e+000, -6.123260e+000, -
1.238800e+001, 1.701412e+001, 5.720605e+000, 3.285483e+001, 3.537618e+001, 6.370706e+000, -2.202919e+001, 1.072904e+001, -
5.069514e+000, 9.082513e+000, -1.444396e+001, 1.141094e+000, 1.974936e+001, -5.142584e+000, 4.286695e+000, 3.029254e+001,
3.811560e+001, 3.547487e+001, 5.610789e+000, 1.264482e+001, 6.409986e+000, 4.696456e+000, -3.203274e+000, 5.901852e+000, -
8.645128e+000, -1.909543e+001, 2.723130e+001, -1.456033e+001, -2.467660e+001, 1.777934e+001, 3.438176e+001, -
1.306233e+001, 4.978933e+000, -9.120411e+000, -3.754250e+001, -7.536692e+000, 1.895227e+001, -1.300919e+001, -
5.468796e+001, 3.752240e+000, 6.779234e+000, -2.378027e+001, -5.187454e+000, 6.445623e+000, -1.049922e+000, -
2.316410e+001, -1.646381e+001, -2.087999e+001, 1.781259e+000, -1.624948e+001, 5.642899e+000, 1.161638e+001, -
5.329070e+000, -1.381070e+001, 7.637946e+000, 6.027765e-001, -2.086570e+001, 4.561740e+000, 4.391576e+000, 1.100294e+001,
-5.518104e+000, 3.371532e+000, 1.124040e+001, -2.035997e+001, -2.616320e+000, -1.731237e+001, -4.693995e+000,
2.081087e+001, -8.825060e+000, -1.685522e+001, -5.558594e+000, -2.104799e+001, -8.779235e-001, 1.228063e+001,
7.298623e+000, -1.642674e+001, 1.680986e+001, 7.615957e+000, -1.628371e+001, 6.050961e+000, 3.824320e+001, -
3.867377e+000, -4.547388e+000, 7.200986e+000, 1.606289e+001, 1.548615e+001, 1.171573e+000, 2.996458e+000, 1.673616e+000,
2.007409e+001, -1.369008e+001, 2.286113e+001, 5.884864e-001, 4.280091e+001, 8.713834e+000, 1.625027e+000, 2.875476e+001,
1.994942e+001, 1.992435e+001, -1.149138e+001, -1.185306e+001, -9.768279e+000, 6.142552e-001, 8.029516e+000, -
1.601760e+001, 1.144994e+001, 4.063401e+001, -1.122261e+001, 2.159502e+001, 2.019247e+001, 1.757070e+001, 1.998692e+001,
1.341839e+001, 1.430858e-002, -1.167383e+001, -2.172195e+001, 9.708292e+000, 5.727536e+000, -1.599075e+000, 2.480783e+001,
-4.137329e+000, -8.128866e+000, -2.624680e-001, 7.848798e+000, -6.916264e+000, 2.124376e+001, 1.305224e+001,
5.750336e+000, -2.251622e+001, 4.554322e-001, -3.889500e-001, 1.511137e+001, 7.947511e+000, 1.973576e+000, -1.278102e+001,
-7.384468e+000, 1.416240e+001, 1.502235e+001, -2.087967e+000, -7.978917e+000, 3.179059e+000, 3.983852e-002, 2.387411e+000,
-3.268876e+000, -2.729827e+001, -1.348235e+001, -6.663371e+000, 1.158339e+001, 6.592907e+000, -6.456828e+000,


--`,,```,,,,````-`-`,,`,,`,`,,`---
© ISO/IEC 2004 — All rights reserved

Copyright International Organization for Standardization
Provided by IHS under license with ISO
No reproduction or networking permitted without license from IHS
Not for Resale

5.223777e+000, -5.791551e+000, 6.248744e-001, -7.984646e-001, -1.056743e+001, 4.351906e+000, -2.329794e+001, 2.581672e+001, -1.516938e+001, 8.986394e+000, -5.793272e+000, 3.462926e+000, -4.235450e-001, 1.198753e+001, 1.886873e+001, -9.242222e+000, -6.929709e-001, 1.542977e+001, -1.136832e+000, -6.661605e+000, -2.442579e+000, -1.884348e-001, -2.280791e+001, 3.429741e+000, -5.788493e+000, -2.201633e+001, 6.007860e-001, -7.297995e-001, -1.296393e+001, 1.070225e+001, -1.622745e+001, 1.688502e+001, -5.352786e+000, 1.182938e+001, 6.028119e+000, 1.397599e+001, -2.263434e+001, -5.797079e+000, -1.839133e+001, -5.492604e+000, -5.822488e+000, -8.656145e+000, 1.139838e+001, 4.865245e+000, 7.950850e+000, -8.409602e-001, 9.205479e+000, -2.914190e+001, 4.496360e+000, 1.351827e-001, 6.319430e+000, 1.064608e+001, -1.008666e+001, 1.254594e+001, 5.890617e+000, -8.140786e+000, 1.081822e+000, -1.179236e+001, 1.452950e+001, -5.065648e+000, -1.235958e+001, 3.828285e+000, 5.194603e+000, -1.484474e+001, 1.560374e+000, 1.335011e+000, -7.703213e+000, -8.012336e+000, -3.012892e+000, 1.537532e+001, -3.192203e+000, 1.243156e+000, 1.234102e+001, -1.176758e+001, 2.065438e+000, -2.049565e+001, 1.118756e+001, 1.781023e+001, -1.051694e+001, -1.089034e+001, -1.579635e+001, 7.536068e+000, -1.337840e+000, 5.302785e+000, -2.571063e+001, 6.398707e+000, 7.115922e+000, -3.135287e+001, 1.568054e+000, -7.868730e+000, -4.725153e+000, -4.903970e+000, -1.809813e+001, 1.107604e+001, 1.923584e+001, -1.256156e+001, 1.419566e+001, -2.897753e+000, 1.595943e+000, 1.438813e+000, -6.754991e-001, -5.119549e+000, 6.291202e+000, -2.624149e+000, -4.450498e-001, -3.480021e+000, -7.702888e+000, 8.051231e+000, -4.175632e+000, -1.033769e+001, -6.551854e+000, 3.670703e+000, -7.840848e-001},
{-1.402752e+001, -1.617121e+001, -2.360684e+001, 2.760435e+000, -1.056457e+001, 1.214724e+001, 5.205791e+000, -1.360399e+001, 1.404943e+001, -5.177589e+000, 5.836505e+000, -9.656424e+000, -7.177254e+000, 8.105613e+000, 7.831293e+000, -2.539657e+000, 5.997892e+000, 8.789150e+000, -2.338572e+001, 5.003489e+000, 1.327121e+001, 4.369117e+000, -3.017160e+000, 3.085553e+001, -2.379414e+001, 2.777165e-001, -7.210261e+000, -7.569406e+000, 1.919939e+001, 1.549699e+001, 9.811877e+000, -6.286554e+000, -5.249683e+000, -4.853974e+000, -1.517395e+000, 1.239207e+001, -1.258961e+001, -1.122252e+001, -4.104467e+001, 1.434948e+001, -2.027116e+001, -4.000221e+000, -1.307188e+001, 3.134688e+000, -7.336402e+000, -6.204461e+000, -8.602840e-003, -1.636171e+001, 1.359799e+001, -3.599916e+000, -9.035838e+000, 1.977723e+001, -1.008952e+001, 6.097390e+000, 2.011865e+000, -1.021045e+001, -1.418021e+001, 5.927004e+000, -8.661062e+000, 4.129075e+000, -7.639286e+000, -1.312744e+001, -6.171778e+000, 1.714881e+001, -2.278072e+000, -1.526853e-001, 8.814328e+000, -5.400503e+000, 6.145114e+000, 1.936111e+001, 1.113786e+001, -1.408777e+001, 3.244731e+000, -2.205447e+000, -9.386158e+000, -7.128965e+000, 1.304144e+001, 6.968205e+000, 1.085061e+001, 9.447326e+000, -7.497289e+000, -1.820719e-001, 1.261514e+001, 7.836477e+000, -2.873854e+000, -2.745951e+000, 1.723797e+001, -2.006986e+001, -6.302481e+000, 1.829222e+001, -1.507376e+001, -9.069938e+000, 1.344018e-001, -1.795861e+001, -1.479038e+001, 1.820812e+001, 4.646985e+000, 2.569686e+001, -5.530552e-001, -2.143965e+000, 7.982737e+000, -2.060292e+001, 1.466967e+001, 4.298020e-001, 3.488786e+000, 3.348997e+001, -2.510443e+001, -7.121938e+000, -1.486165e+001, 4.862388e+001, -1.631939e+001, -2.158977e+001, -1.064449e+001, -9.192521e-001, -2.324080e+001, 2.995694e+001, -2.001307e+001, 6.371750e+000, 2.841478e+000, -2.480269e+001, -4.016858e+001, 1.148836e+001, 2.362460e+001, 1.379391e+001, -2.611442e+001, -1.409981e+001, -3.576839e+001, 1.891533e+001, 1.312809e+001, 9.142666e-001, -2.943300e+001, 6.595545e+000, -2.394152e+000, 2.065096e+001, -1.092602e+001, 7.471120e+000, 9.343983e+000, 9.508905e+000, -1.945666e+001, 4.477518e+000, -2.217057e+000, -1.528596e+001, -1.865242e+001, 1.124430e+001, -4.552697e+000, 7.097232e+000, 3.425607e+000, -2.112485e+001, 6.437828e+000, 5.419709e+000, 1.794752e+001, 8.585618e+000, 1.942584e+001, -3.041211e+000, -3.764012e+001, 2.932102e+001, -1.997649e+000, -1.902179e+001, -1.135034e+001, -2.163188e+001, -4.594892e+001, -1.082336e+001, -3.168532e+001, -1.860188e+001, 1.708300e+000, -1.554628e+000, -2.461033e+000, -1.881036e+001, -4.779339e+001, 2.046676e+001, 1.320091e+001, -1.665763e+001, -2.318061e+001, 2.617639e+000, -9.354665e+000, -2.495761e+000, 1.457226e+001, 6.578145e+000, 2.273835e+001, 1.273897e+001, -3.232237e+001, 1.387418e+001, 3.799145e+000, -1.912109e+001, 1.286246e+001, -1.157492e+001, 3.538246e+001, 1.462281e+000, 2.806483e+001, 4.803544e+000, -5.148307e+000, 1.156933e+001, -1.315870e+001, -1.088766e+000, 1.206982e+000, 1.563975e+001, 8.357066e+000, -3.317002e+001, -1.769007e+001, 1.559173e+001, 5.640411e+000, -2.929804e+001, 1.166566e+001, -4.028617e+000, -9.076369e-001, 1.709188e+001, -2.318930e+001, 5.849692e+000, 1.360852e+001, 8.475385e-001, -2.044682e+001, -8.272101e+000, -9.474469e+000, 2.342472e+001, -5.348197e+000, 8.914373e-001, -6.156434e+000, 3.709367e+001, 6.801772e+000, 8.762955e+000, 1.796263e+000, 1.559829e+001, 7.465445e+000, 1.256390e+001, -1.230069e+001, 6.129502e+000, 1.575536e+001, 5.584628e+000, -1.473729e+001, -4.145747e+000, -9.120006e+000, 7.915787e+000,

© ISO/IEC 2004 — All rights reserved


Copyright International Organization for Standardization
Provided by IHS under license with ISO
No reproduction or networking permitted without license from IHS
Not for Resale

1.038993e+001, 4.012471e+001, -7.835663e+000, -1.679234e+001, 1.139273e+001, 1.769701e+001, 1.295909e+001, -2.672973e+001, -1.052651e+001, 1.063076e+000, -5.502948e+000, 9.504976e+000, 3.233264e-001, 5.406700e+000, 2.244123e+000, -1.672514e+001, 1.740429e+001, -1.472491e+001, 2.339556e-001, 3.155111e+001, 1.087145e+000, 3.850640e-001, 5.522351e-001, 7.810923e-001, -1.690371e+001, 2.857169e+000, 1.302794e-002, 1.078930e+000, 1.627139e+001, -1.768475e+001, -1.926234e+001, -1.327889e+001, 5.715111e+000, 1.999916e+000, 1.097800e+001, -6.406284e+000, 6.982778e-001, 1.812211e+001, 2.138634e+000, 1.496931e+001, -7.586405e+000, -2.334334e+000, 4.858834e+000, -1.028285e+001, 1.227186e+001, -1.281194e+001, 1.551970e+001, 2.282113e+001, -2.085971e+001, 4.847170e+000, 1.141462e+001, 1.879278e+000, 1.208461e+001, 9.642409e+000, -1.173906e+001, -6.209604e-002, -1.002658e+001, -4.729375e+000, -2.369967e+001, 2.403245e+001, -2.178146e+001, -1.660529e+001, -1.915565e+001, 1.429634e-001, 7.778458e+000, 6.572009e+000, -1.272357e+001, -3.631361e+000, 1.479708e+000, 1.846572e+001, -1.332455e+001, -1.462077e+001, -8.777578e+000, -1.531942e+001, 1.455120e+001, 9.288975e+000, 6.339686e+000, 1.322891e+001, 1.992111e+000, -7.665382e+000, -6.958464e+000, -3.287659e+000, -2.402602e+000, 1.747088e+001, -2.703877e+001, -3.549067e+000, -3.960632e+000, -4.103206e+000, 1.574340e+001, -1.956484e+001, -2.452209e+001, -1.083877e+000, -3.750280e+000, 5.011038e+000, 1.535749e+001, -1.195049e+001, -1.176928e+001, 1.859667e+001, 1.709222e+001, 3.621170e+000, -1.486037e+001, 4.171673e+000, -1.481468e+001, -2.405802e+001, -1.501215e+001, -1.284504e+001, 4.049470e+000, -7.449781e+000, -6.431719e+000, -1.226350e+001, -1.949265e-001, 7.496836e-001, -1.331159e+000, 1.468026e+000, -1.187722e+001, -4.753710e+000, 5.657554e+000, -1.304530e+000},
{1.017009e+001, -7.537236e+000, -1.737690e+001, -1.973628e+001, -1.222695e+001, 2.988082e+001, 2.700389e+000, -1.739883e+001, 7.611769e+000, -4.077274e+001, 2.210028e+001, 7.769381e-001, 1.531426e+001, -8.223080e+000, -1.611357e+000, 5.013257e+000, -5.903062e+000, -1.263557e+001, 3.518914e+000, 2.927942e+000, -1.605233e+001, 1.703827e+001, -1.320306e+001, 7.645268e-002, 1.855261e+001, 2.725699e+001, 1.371407e+000, 3.222320e+000, 7.318619e+000, -2.344627e+001, 2.474321e+001, -2.186771e+001, 5.280897e+000, -1.035100e+001, 1.413127e+000, -8.540654e+000, -9.771990e+000, -2.924709e+000, 1.289918e+001, -5.199321e+000, 6.486449e+000, 3.678100e+000, -2.521564e+001, -1.323683e+001, -1.223600e+001, -2.430196e-002, -7.773910e+000, -1.752713e+001, -9.379151e+000, 4.973929e+000, 3.422836e+000, 3.953136e+000, -1.210604e+001, -1.081663e+001, 1.454468e+000, -9.856072e+000, 6.272397e+000, -1.146938e+001, -4.107736e+000, -9.004989e-001, -1.127495e+001, -7.709266e+000, -6.863809e+000, -2.150559e+001, 8.407245e+000, 4.330197e+000, 2.086398e+001, 5.274708e+000, 2.894160e+000, -7.641891e-001, -4.302355e+000, 2.274192e+000, 7.186932e-001, -1.163773e+001, 1.337688e+001, 6.742575e+000, 8.329091e+000, 1.860643e+001, -1.079095e+001, -1.044950e+001, 1.710805e+001, -1.122176e+001, -9.169532e+000, 6.984390e+000, -1.406712e+001, -1.209544e+001, 9.292727e+000, -7.378010e+000, -1.243017e+001, -1.511956e+001, -3.940565e+000, -2.394830e+001, 8.552220e+000, 5.092260e+000, -1.145359e+001, 1.790742e+000, 3.710878e+001, 6.793943e+000, 1.000790e+001, -2.306244e+001, -9.190236e+000, 1.281150e+001, -1.155735e+001, -1.927677e+000, -1.114936e+001, -7.121920e+001, -6.715849e+000, -7.609511e+000, 4.059879e+001, 3.626497e+001, -3.396734e+000, 2.012135e+001, -2.085108e+001, 1.359046e+001, 3.176236e+001, 3.518876e+000, 2.502407e+000, -2.458302e+001, -4.474492e+000, -2.691486e+000, 3.391830e-001, 1.819822e+001, 3.159469e+001, 5.947466e-001, -7.619283e+000, -7.253671e+000, -1.183767e+001, -2.956545e+001, -5.066039e+000, 1.609712e+001, -3.319995e-001, 1.291430e+001, 7.399379e+000, -1.557802e+001, -1.150911e+001, -1.924921e-001, -1.705031e-001, 2.363536e+000, -1.010865e+001, -3.220818e+001, -1.031776e+001, 4.430407e+000, 2.487597e+000, 5.695774e+000, 3.115082e+000, -4.983263e+000, -2.142555e+000, 1.870930e+001, 3.732436e+000, 1.350760e+000, -6.298365e+000, 1.187143e+001, -4.310192e+000, -5.647149e+000, -7.953168e+000, -1.532754e+001, 3.365815e-001, 4.711892e+000, 1.587083e+001, -3.279383e+001, 4.657922e+001, 1.140474e+001, -1.251886e+001, -1.618763e+001, 1.900310e+001, 6.407575e+000, -1.459766e+001, 1.078850e+001, 3.841035e+001, -2.999296e+001, -3.077837e+001, 1.818475e+001, -3.738364e+000, -1.150161e+001, 1.066727e+000, -1.123784e+000, -1.032271e+001, 9.205126e+000, 1.880488e+001, 2.695386e+001, 1.706812e+001, 3.412432e+001, 2.393792e+001, -1.435042e+001, 1.077882e+000, -9.606373e+000, -1.446220e+001, -1.783801e+001, 1.028510e+001, 3.168461e+001, 1.274845e+001, -2.181120e+000, 1.514044e+001, -2.132373e+001, -8.502609e-001, 6.698507e+000, -2.983363e+001, 3.161685e+001, -1.985898e+001, -5.244764e+000, 6.388268e+000, 2.300282e+001, -2.384751e+000, -7.974666e-001, -9.532982e+000, -2.265558e+000, -2.238422e+000, -8.149151e+000, 2.527178e+001, -1.113613e+000, -7.022689e+000, 1.599983e+001, 9.631427e+000, 6.575741e+000, 1.343831e+001, -1.048963e+001, 2.843498e+001, -6.674862e+000, -1.400147e+001, -9.444055e+000, 4.310507e+000, 7.537809e+000, -1.109399e+001, -7.710302e+000, 1.123141e+001, -6.712442e+000, 8.581673e-001, -7.900683e+000, 1.714150e+001, -4.232393e-001, 5.494717e+000, -1.858862e+000, 2.526894e+000,


© ISO/IEC 2004 — All rights reserved

Copyright International Organization for Standardization
Provided by IHS under license with ISO
No reproduction or networking permitted without license from IHS
Not for Resale

-8.813794e+000, -2.597133e+000, 2.249583e+001, -4.768997e+000, -1.093300e+001, -2.439924e+001, 1.927595e+001, -6.564973e+000, -1.759741e+001, 3.089275e+000, -5.788164e+000, -1.023403e+001, -1.309961e+001, 2.451256e+001, 1.673741e+001, -4.876563e+000, -1.538998e+001, 1.892848e+001, 1.896678e+001, -9.331680e+000, -3.203893e+000, -1.154552e+000, -1.951968e+001, 1.614898e+001, 1.298135e+001, 4.007598e+000, 4.049373e+000, 3.193199e+000, -3.329495e+001, 1.345243e+001, 1.320842e+001, -2.157507e+000, -4.115372e+000, 7.063673e-001, -3.194262e+000, 5.472865e+000, 5.324380e+000, -5.947049e-001, -1.114463e+001, -1.139431e+001, -7.536311e+000, 1.419197e+001, 1.572777e+001, -1.060231e+001, 1.408636e+001, 9.952323e+000, -3.517747e+000, 1.063320e+001, 7.784337e+000, -1.846670e+001, -8.911032e+000, 2.217550e+000, -2.958529e+001, 4.106295e+000, -4.757704e+000, 3.278151e+000, 6.719921e+000, 1.357091e+001, -7.247359e+000, -2.183255e+001, -6.292563e+000, -4.188263e+000, -1.091089e+001, 1.527414e+001, 7.556611e+000, -8.256423e+000, 1.298364e+001, 2.679300e+000, -7.203645e+000, -1.623898e+001, -4.839047e+000, 5.406146e+000, -6.179502e-002, 8.242496e+000, -6.526917e+000, -5.533282e+000, -3.455724e+000, -8.618762e+000, -8.578413e+000, -5.726740e+000, 4.680598e+000, 3.463067e+001, 2.295883e+000, 2.171658e+000, -8.519374e+000, 1.368473e+000, 3.655473e+000, -5.725998e+000, -9.719353e+000, 9.756068e+000, 1.782215e+000, 9.372164e+000, -7.023366e+000, -1.130115e+000, 6.373364e+000, 6.408368e+000, -1.027375e+001, 1.219230e+000, -6.520900e+000, 7.493901e+000, -2.074646e+001, -8.414309e+000, -5.897804e-001, -7.954921e+000, -1.225224e+001, 5.415978e+000, -1.035476e+001, 8.831356e-001, -3.529423e+000, 4.639207e+000, 6.982260e+000, -9.750569e+000, -4.412297e+000, -6.701648e+000, -1.972807e+001, -7.479947e+000, -1.325938e+001},
{2.124578e+001, -2.059790e+001, -2.537323e+001, 1.858403e-001, 7.505612e+000, 9.818371e+000, -5.150116e+000, -6.774336e+000, 8.757783e+000, 8.955963e+000, 1.907644e+000, 1.422568e+001, 3.688611e+001, -8.603004e+000, -2.531911e+001, 7.051763e+000, -6.256534e+000, 2.218074e+001, 1.020724e+001, -2.678547e+000, -1.091159e+001, -3.368563e+000, 1.135456e+001, 5.688597e+000, -1.151944e+001, 1.991513e+001, -3.102596e+001, -2.260996e+001, -2.044428e+000, 1.122935e+001, 6.169984e+000, 7.952665e+000, -8.877377e+000, -3.033129e+001, 2.709307e+000, -4.507001e+000, -1.862407e+001, 5.237354e+000, -1.803800e+001, -1.526041e+001, -2.295702e+001, -7.480554e+000, 2.308548e+001, -8.099276e+000, 2.575612e+000, 1.616899e+001, -7.634414e+000, 4.406840e-001, 6.952015e+000, 8.278280e+000, 7.382349e+000, 2.161796e+001, 9.754819e+000, 1.297707e+001, 8.863369e+000, 1.064521e+001, -2.002630e+001, 9.056139e+000, 2.233814e+001, 1.693610e+001, -8.205752e+000, 3.281635e+000, 1.852499e+000, 8.550062e+000, -3.915793e+000, -6.944961e+000, 2.434842e+000, -8.214340e+000, -5.527652e+000, 5.555021e+000, -1.101548e+001, -5.354732e+000, -1.291000e+000, 7.870583e+000, 6.098691e+000, 1.716748e-001, -7.918898e+000, -3.932257e+000, -1.974650e+001, -3.310967e+000, 1.800488e+001, 8.049795e+000, -8.246938e+000, -1.915618e+000, 4.576767e+000, -4.771016e+000, 1.086956e+001, 8.979102e+000, -6.604293e+000, -1.077415e+001, -6.553722e+000, 1.204810e+001, 1.993949e+001, 5.192179e-001, -1.909766e+001, -4.795257e+000, -1.864544e+001, -6.105230e+000, -2.568126e+001, -3.036510e+001, -8.711961e+000, -2.993164e+001, 2.246301e+000, -1.206366e+001, 8.135589e+000, 2.487667e+001, -1.977078e+000, 6.303494e+001, 5.897570e+000, 2.119305e+000, 3.747272e+001, 1.344562e+001, 8.065276e+000, 8.650502e+000, -2.827247e+001, -7.665054e-001, -3.339674e+001, -2.753540e+001, -5.597103e+000, 1.623874e+001, 1.243293e+001, -2.723741e+000, 4.732865e+000, -2.648177e+001, -3.744865e+001, -5.805879e+000, 2.889598e+000, -1.161942e+001, 2.873304e+000, 1.437190e+001, -2.514624e+001, 3.221676e+001, -3.663699e+000, -6.161991e+000, -7.168993e+000, 9.666813e+000, -2.141128e+001, -1.907093e+001, -6.638659e+000, 1.333189e+000, -1.032551e+001, -1.293514e+001, 2.860964e+001, -1.308308e+001, 3.018088e+001, -5.906616e+000, 2.345247e+000, -4.261089e+000, 6.989290e+000, 6.886221e+000, -2.629999e+000, 2.442840e+001, 1.482689e+001, 1.534742e+001, -1.806618e+001, -3.882388e-001, 1.636177e+001, 1.048659e+001, 1.580083e+001, 8.878022e+000, 4.992387e+000, 8.632916e+000, -1.727612e+001, -2.173098e+001, -3.431296e+001, 3.190964e+001, -3.542361e+001, -1.320896e+001, -4.937647e+000, -6.111042e+000, -3.442256e+001, -1.801574e+001, -4.047899e-001, -3.561138e+000, 8.402615e+000, 5.830733e+000, -5.338086e+000, -1.009193e+001, -3.365980e+000, -8.428770e+000, -1.825230e+001, -1.027873e+001, -3.315141e+000, 3.621957e+001, -1.150260e+001, -4.035448e+000, -1.893253e+001, -5.711171e+000, 7.798817e+000, -2.686645e+000, -2.482104e+000, 1.013429e+000, -3.978875e+000, -9.711671e+000, 5.882070e+000, 1.655465e+001, -4.831618e+000, -5.309913e+000, -1.373412e+001, -2.341905e+000, 7.649174e+000, -5.185336e+000, -3.682165e+000, -5.369141e+000, -1.285730e+001, -6.392167e+000, 1.148654e+001, 6.822977e+000, 7.919853e+000, 2.958956e+001, -1.233663e+001, -4.528545e+000, 7.447168e+000, -1.936481e+000, -3.309853e+000, -5.464737e+000, -5.466313e+000, -2.669676e+000, -2.457738e+000, 9.335258e+000, 4.633302e+000, 1.150954e+001, -6.820999e+000, -2.099658e+001, -1.024248e+001, -5.468974e-001, -8.513728e+000, -3.420047e+000, 5.135696e+000, 5.644361e+000, 1.305945e+001, 8.834680e+000,

© ISO/IEC 2004 — All rights reserved


Copyright International Organization for Standardization
Provided by IHS under license with ISO
No reproduction or networking permitted without license from IHS
Not for Resale

2.462864e+000, -5.681372e-001, 5.283990e+000, -1.446159e+001, -2.321579e+001, -1.006573e+001, -2.113036e+001, -1.081401e+001, 1.144713e+001, -1.513029e+001, 1.230533e+001, 9.786674e+000, -2.538364e+000, 8.655030e-001, 3.933872e+000, 1.938608e+001, 5.818073e+000, -7.971221e+000, -1.451496e+001, -5.479600e+000, 1.018163e+001, -1.231715e+001, 3.464158e+000, -1.588777e+001, 4.727335e+000, -1.687627e+001, -4.046326e+000, -8.752792e+000, 7.179936e+000, -8.879358e+000, 1.242153e+001, 1.123934e+001, 6.294430e+000, -3.717827e+000, -4.029418e+000, 5.927336e+000, -4.246059e+000, 1.866447e+000, -2.662154e+000, 6.330701e+000, 1.343992e-001, 4.976659e+000, -8.552037e-001, -1.082772e+001, 9.762610e+000, -1.502636e+001, 1.180275e+001, -3.608952e+001, 1.240628e+001, -2.318351e+001, -4.055998e+000, -7.247398e+000, -9.104948e+000, -6.138999e+000, 2.446316e+000, -1.577091e+000, 1.755993e+001, -4.215527e+000, -4.914000e+000, 1.352864e+001, -2.327230e+001, 2.080193e+000, 9.274576e+000, 1.562678e+001, -4.864959e+000, -2.018017e+001, 1.075955e+001, -3.740968e+000, -2.733653e+000, -1.985388e+000, 6.393024e+000, -5.316421e+000, -9.127589e-001, 8.466098e+000, -8.377823e+000, 5.265988e+000, 4.539043e-001, 2.462380e-001, 1.615771e+001, 1.879412e+001, 9.540590e+000, 3.591992e+000, 8.718766e+000, 1.113264e+001, 4.972721e+000, 7.498123e+000, -2.409923e+001, -2.780258e+000, 2.093751e+001, -4.942100e-001, -2.051512e+001, -2.200216e+001, -1.645712e+001, -6.513318e+000, -2.214739e+000, 1.313019e+000, 4.847558e+000, -6.993503e+000, 3.186331e+001, 1.956892e+001, -9.424345e+000, 2.712030e+000, -1.162516e+001, -1.286021e+001, 4.957425e+000, 1.625107e+001, 1.048530e+000, 1.701293e+001, -2.754256e+000, 7.679110e+000, -1.345814e-001, 7.079062e+000, 7.870474e+000, 2.005498e+000, -2.246541e+000, 1.416233e+001, 6.324797e+000, 2.051000e+000},
{4.286484e+001, 1.443913e+001, -9.684200e+000, -1.052109e+001, -8.162281e+000, -1.336017e+001, 2.518349e+001, -1.208446e+001, -1.651364e+001, -1.103496e+001, 2.792126e+001, 3.616543e+000, -7.716647e+000, -1.555786e+001, -5.915989e+000, -1.705144e+001, 7.196148e+000, -1.059950e+001, 1.561692e+001, 4.492329e+000, 4.967912e+000, -9.109662e+000, -1.799137e+001, 3.491117e+001, -1.912080e+001, -2.549031e+001, 9.448696e+000, 1.901309e+001, 2.954025e-001, 2.507277e+000, -1.746880e+001, -1.080549e+001, 2.103415e+001, -1.024577e+001, 7.649981e+000, -1.261103e+001, -7.571075e+000, -1.089031e+001, -8.374387e-001, 1.014387e+001, 1.251478e-001, -8.603167e+000, -1.498171e+001, -5.043851e+000, 5.054522e+000, -1.384521e+001, 4.788142e-001, 8.488413e+000, -1.986898e+001, 2.831001e+000, -2.832156e+001, -1.351082e+001, 3.062800e+000, 1.558148e+001, 3.335496e+000, 7.249886e+000, 9.422975e+000, -7.919672e+000, 1.170763e+001, -1.206465e+001, 5.196487e-001, -7.557121e-001, 5.217485e+000, 2.023347e+001, 1.024008e+001, 7.461332e-003, 1.607328e+001, 3.972454e-001, -1.429786e+001, 9.697818e-001, -3.015089e+001, 6.145518e+000, -8.229162e+000, -7.308693e+000, 2.057962e+001, -2.130147e+000, 5.792736e+000, -9.039856e+000, 2.794458e+000, 2.165638e+000, 1.043762e+001, -8.144416e+000, -6.384551e-001, 7.327101e+000, -2.700819e+001, -1.934504e+001, -3.958396e-001, -4.661218e-001, -3.196154e+001, -5.083944e-001, -2.673516e+001, 3.147050e+000, -3.129612e+000, 6.501654e+000, 2.254066e+001, -5.063163e+000, 1.563103e+001, -1.683742e+000, 6.634679e+000, -4.497968e+000, 1.943158e+001, -5.589302e+000, -2.426980e+001, -2.201963e+001, 3.552060e+000, 3.412779e+001, -8.040256e+000, 1.959320e+001, 2.956222e+000, -1.292686e+000, 1.404543e+001, -1.748195e-001, 8.806544e+000, -4.021690e+001, -3.893587e+001, -2.365920e+001, 1.695146e+001, -1.403621e+001, 1.951700e+001, 2.313569e+000, -1.267495e+001, 1.788459e+001, -7.273236e+000, 4.353653e+001, 8.950355e+000, -1.449421e+001, -1.482560e+001, -1.950380e+001, -1.806632e-001, 6.226949e-002, 2.444178e+001, -8.714689e+000, -5.315953e+000, -5.547001e+001, -1.383050e+001, 1.637233e+001, -1.072448e+001, 1.002926e+001, -2.951007e+000, 1.167958e+001, 2.565718e+001, 3.034196e+001, 4.265852e-001, 9.955763e+000, -2.127582e+001, 2.083126e+001, 8.610421e+000, -8.647562e+000, -7.023573e+000, 7.353874e+000, -4.824286e+000, 1.722679e+001, 8.939197e+000, -1.857343e+001, -1.702063e+001, 1.480451e+001, 3.115159e+000, 1.158806e+001, 6.381125e+000, 6.991009e+001, -2.338722e+000, 2.058366e+001, 6.464874e+000, 8.581739e+000, 9.363316e-001, 5.141802e+000, -1.521607e+001, -1.738818e+001, -1.196045e+001, 1.041518e+001, 1.586335e+000, 2.223289e+001, 1.142498e+001, -1.460622e+001, 1.342689e+001, 1.323353e+001, -2.411287e+000, -1.265873e+001, 9.759812e+000, 4.583709e+000, -1.346244e+001, 1.123274e+001, -3.075776e+001, -5.012417e+000, -4.987353e+000, -6.979863e+000, 2.060902e+001, -4.295373e+000, -1.001143e+001, 5.110853e+000, 1.461941e+001, 3.025269e+000, -1.567127e+001, 2.319662e+001, -9.543336e+000, -1.757906e+001, 1.205247e+001, 3.533239e+000, 1.400674e+001, -1.343133e+001, -6.962707e+000, -1.114853e+001, -2.022813e+001, -7.252194e-001, 7.443086e+000, 2.944669e+001, 1.116594e+001, -5.452957e+000, -2.642636e+001, -1.283095e+001, -1.084047e+000, -2.720609e+001, 2.523851e+001, 1.062249e+000, 8.384477e+000, -9.823461e+000, -2.218533e+001, -1.630780e+001, -1.332536e+000, -7.955309e+000, 2.427329e+001, -8.036246e+000, 1.437781e+001, -1.131325e+001, -4.642158e+000, 1.123558e+001, 1.844268e+000, 8.750669e+000, 5.995969e+000, -1.806367e+001, 2.082580e+001, 1.095157e+001, -7.689236e+000, -9.963916e+000, -


© ISO/IEC 2004 — All rights reserved

Copyright International Organization for Standardization
Provided by IHS under license with ISO
No reproduction or networking permitted without license from IHS
Not for Resale

8.028555e+000, 8.440865e+000, -3.969285e+001, 1.347109e-001, 1.169857e+001, 1.176146e+001, -1.226173e+001, 8.225313e+000, 2.018518e+001, 6.692751e-001, 2.639013e+001, -1.317178e+001, -7.538840e+000, -3.683997e+000, -1.852897e+000, 1.944078e+001, 3.884980e+000, 1.126506e+000, -1.220532e+001, 6.383767e-001, -7.187598e+000, 2.105037e+001, -1.368677e+000, -6.630887e+000, -9.695799e+000, -4.986427e+000, 7.611918e+000, -1.458696e+001, -3.713728e+000, 1.090941e+001, 8.635562e+000, 1.304456e+001, 6.640262e+000, -6.596928e+000, 2.697263e+001, -1.221629e+001, 3.457646e+000, -2.441571e+001, -2.322050e+000, -6.322598e+000, 4.345433e+000, -1.086693e+001, -1.310427e+001, -2.160832e+001, 3.042732e+000, 2.122051e+001, -1.521948e+001, -3.700668e+000, 1.272770e+001, 1.610637e+001, -6.153348e+000, -5.104422e+000, 2.232832e+001, -4.756961e+000, 4.229575e+000, -1.623265e+001, -7.740656e+000, -1.664539e+001, 2.407793e+000, 1.207881e-001, 8.390057e+000, 1.045674e+001, -2.328897e+001, 1.003824e+001, 3.458877e+000, 1.418019e+000, 7.844805e+000, 7.073795e+000, 5.666804e+000, 9.468427e+000, 6.493070e+000, 1.485620e+000, 5.254133e+000, 7.920216e+000, -6.244213e+000, -1.438003e+001, -2.404021e+000, 1.190692e+001, -8.456267e+000, -1.634261e+001, 6.027265e+000, 9.046066e+000, -7.363920e+000, 4.195465e+000, -1.153281e+000, -5.286619e+000, 1.260150e+001, -1.237581e+000, -7.156186e-001, 3.843010e+000, -4.695675e+000, 9.999563e+000, -1.846322e+001, -3.557814e+000, -1.500274e+001, -5.057143e+000, 4.148328e+000, -1.633484e+000, -2.086784e+000, 4.438749e+000, 8.954732e+000, 7.099687e-001, 8.500517e-002, -1.384223e+001, 6.913916e+000, 2.655687e+000, -1.641257e+001, 1.287094e+000, 2.069399e+001, -2.283304e+000, -1.080572e+001, -1.728105e+001, 2.420031e+000, 6.611152e+000, 3.869427e+000, 1.698917e+000}
};

© ISO/IEC 2004 — All rights reserved


--`,,```,,,,````-`-`,,`,,`,`,,`---

Copyright International Organization for Standardization
Provided by IHS under license with ISO
No reproduction or networking permitted without license from IHS
Not for Resale

**ICS 35.040**

Price based on 33 pages

--`,,```,,,,````-`-`,,`,,`,`,,`---

© ISO/IEC 2004 – All rights reserved

Copyright International Organization for Standardization
Provided by IHS under license with ISO
No reproduction or networking permitted without license from IHS

Not for Resale