INTERNATIONAL STANDARD

ISO/IEC 15486

First edition
1998-05-15

Information technology — Data interchange on 130 mm optical disk cartridges of type WORM (Write Once Read Many) using irreversible effects — Capacity: 2,6 Gbytes per cartridge

Technologies de l'information — Échange de données sur cartouches de disque optique de 130 mm *de type WORM utilisant des effets irréversibles — Capacité:* 2,6 Gbytes *par cartouche*



Reference number
ISO/IEC 15486:1998(E)

Copyright International Organization for Standardization
Provided by IHS under license with ISO
No reproduction or networking permitted without license from IHS

Not for Resale

Contents

Section 1 - General 1

1 Scope 1

2 Conformance 1
2.1 Optical Disk Cartridge (ODC) 1
2.2 Generating system 1
2.3 Receiving system 1
2.4 Compatibility statement 1

3 Normative reference 1

4 Definitions 2
4.1 band 2
4.2 case 2
4.3 clamping zone 2
4.4 control track 2
4.5 Cyclic Redundancy Check (CRC) 2
4.6 defect management: 2
4.7 disk reference plane 2
4.8 entrance surface 2
4.9 Error Correction Code (ECC) 2
4.10 format 2
4.11 hub 2
4.12 interleaving 2
4.13 land and groove 2
4.14 logical track 2
4.15 mark 2
4.16 mark edge 2
4.17 mark edge recording 2
4.18 optical disk 2
4.19 optical disk cartridge (ODC) 2
4.20 physical track 2
4.21 polarization 2
4.22 pre-recorded mark 2
4.23 read power 2
4.24 recording layer 2
4.25 Reed-Solomon code 2
4.26 space 3
4.27 spindle 3
4.28 substrate: 3
4.29 track pitch 3
4.30 write-inhibit hole 3
4.31 zone 3

© ISO/IEC 1998
All rights reserved. Unless otherwise specified, no part of this publication may be reproduced or utilized in any form or by any means, electronic or mechanical, including photocopying and microfilm, without permission in writing from the publisher.
ISO/IEC Copyright Office • Case Postale 56 • CH-1211 Genève 20 • Switzerland
Printed in Switzerland

Copyright International Organization for Standardization
Provided by IHS under license with ISO
No reproduction or networking permitted without license from IHS
Not for Resale

5 Conventions and notations 3
5.1 Representation of numbers 3
5.2 Names 3

6 List of acronyms 3

7 General description of the optical disk cartridge 4

8 General requirements 4
8.1 Environments 4
8.1.1 Test environment 4
8.1.2 Operating environment 4
8.1.3 Storage environment 5
8.1.4 Transportation 5
8.2 Temperature shock 5
8.3 Safety requirements 5
8.4 Flammability 5

9 Reference Drive 5
9.1 Optical system 5
9.2 Optical beam 7
9.3 Read Channels 7
9.4 Tracking 7
9.5 Rotation of the disk 7

Section 2 - Mechanical and physical characteristics 7

10 Dimensional and physical characteristics of the case 7
10.1 General description of the case 7
10.2 Relationship of Sides A and B 8
10.3 Reference axes and case reference planes 8
10.4 Case Drawings 8
10.5 Dimensions of the case 8
10.5.1 Overall dimensions 8
10.5.2 Location hole 9
10.5.3 Alignment hole 9
10.5.4 Surfaces on Reference Planes P 10
10.5.5 Insertion slots and detent features 11
10.5.6 Gripper slots 11
10.5.7 Write-inhibit holes 11
10.5.8 Media sensor holes 12
10.5.9 Head and motor window 13
10.5.10 Shutter 13
10.5.11 Slot for shutter opener 14
10.5.12 Shutter sensor notch 14
10.5.13 User label areas 14
10.6 Mechanical characteristics 15
10.6.1 Materials 15
10.6.2 Mass 15
10.6.3 Edge distortion 15
10.6.4 Compliance 15
10.6.5 Shutter opening force 15
10.7 Drop test 15

11 Dimensional, mechanical and physical characteristics of the disk 15
11.1 General description of the disk 15
11.2 Reference axis and plane of the disk 15
11.3 Dimensions of the disk 16
11.3.1 Hub dimension 16

--`,,```,,,,````-`-`,,`,,`,`,,`---

Copyright International Organization for Standardization
Provided by IHS under license with ISO
No reproduction or networking permitted without license from IHS Not for Resale

11.4 Mechanical characteristics 17
11.4.1 Material 17
11.4.2 Mass 17
11.4.3 Moment of inertia 17
11.4.4 Imbalance 17
11.4.5 Axial deflection 17
11.4.6 Axial acceleration 17
11.4.7 Radial runout 18
11.4.8 Radial acceleration 18
11.4.9 Tilt 18
11.5 Optical characteristics 18
11.5.1 Index of refraction 18
11.5.2 Thickness 18
11.5.3 Birefringence 18
11.5.4 Vertical Birefringence 18
11.5.5 Reflectance 19

12 Interface between cartridge and drive 19
12.1 Clamping method 19
12.2 Clamping force 19
12.3 Capture cylinder 19
12.4 Disk position in the operating condition 20

Section 3 - Format of information 35

13 Track geometry 35
13.1 Track shape 35
13.2 Direction of track spiral 35
13.3 Track pitch 35
13.4 Logical track number 35
13.5 Physical track number 35

14 Track format 35
14.1 Physical track layout 35
14.2 Logical track layout 35
14.3 Radial alignment 36
14.4 Sector number 36

15 Sector format 36
15.1 Sector layout 36
15.2 Sector Mark 36
15.3 VFO fields 37
15.4 Address Mark (AM) 38
15.5 ID fields 38
15.6 Postamble (PA) 38
15.7 Gap 39
15.8 Flag 39
15.9 Auto Laser Power Control (ALPC) 39
15.10 Sync 39
15.11 Data field 39
15.11.1 User data bytes 40
15.11.2 CRC and ECC bytes 40
15.11.3 Bytes for Defect Management Pointers (DMP) 40
15.11.4 Resync bytes 40
15.12 Buffer field 40

16 Recording Code 40

17 Formatted Zone 41
17.1 General description of the Formatted Zone 41

Copyright International Organization for Standardization
Provided by IHS under license with ISO
No reproduction or networking permitted without license from IHS Not for Resale

17.2 Division of the Formatted Zone 41
17.2.1 Lead-in Zone 43
17.2.2 Manufacturer Zones 43
17.2.3 User Zone 44
17.2.4 Reflective Zone 44
17.2.5 Control Track Zones 44
17.3 Control Track PEP Zone 44
17.3.1 Recording in the PEP Zone 44
17.3.2 Format of the tracks of the PEP Zone 45
17.4 Control Track SFP Zones 49
17.4.1 Duplicate of the PEP information 49
17.4.2 Media information 49
17.4.3 System Information 51

18 Layout of the User Zone 52
18.1 General description of the User Zone 52
18.2 Divisions of the User Zone 52
18.2.1 Reserved Area Use 52
18.3 User Area 53
18.4 Defect Management Areas (DMAs) 54
18.5 Disk Structure Table (DST) 55
18.6 Write Once Read Many (WORM) Zone 56
18.6.1 Location 57
18.6.2 Partitioning 57

19 Defect Management for WORM Media 57
19.1 Initialization of the disk 57
19.2 Defect Management Pointers 57
19.3 Write procedure 58
19.3.1 Read Procedure 58

Section 4 - Characteristics of embossed information 60

20 Method of testing 60
20.1 Environment 60
20.2 Use of the Reference Drive 60
20.2.1 Optics and mechanics 60
20.2.2 Read power 60
20.2.3 Read Channels 60
20.2.4 Tracking 60
20.3 Definition of signals 60

21 Signal from grooves 62
21.1 Cross-track signal 62
21.2 Push-pull signal 62
21.3 Divided push-pull signal 62
21.4 Phase depth 63
21.5 Track location 63

22 Signals from Headers 63
22.1 Sector Mark Signals 63
22.2 VFO signals 63
22.3 Address Mark, ID and PA signals 63
22.4 Timing jitter 64

23 Signals from embossed Recording fields 64
23.1 Signal amplitude 64
23.2 Modulation method offset 64
23.3 Timing Jitter 64
23.4 Byte Errors 65

Copyright International Organization for Standardization
Provided by IHS under license with ISO
No reproduction or networking permitted without license from IHS Not for Resale

24 Signals from Control Track PEP marks 65

Section 5 - Characteristics of the recording layer 66

25 Method of testing 66
25.1 Environment 66
25.2 Reference Drive 66
25.2.1 Optics and mechanics 66
25.2.2 Read power 66
25.2.3 Read Channel 66
25.2.4 Tracking 66
25.2.5 Signal detection for testing purposes 66
25.3 Write conditions 66
25.3.1 Write pulse and power 66
25.3.2 Pulse power determination 67
25.3.3 Media power sensitivity 67
25.4 Definition of signals 67

26 Imbalance of difference signal 68

27 Write characteristics 68
27.1 Resolution 68
27.2 Narrow-band signal-to-noise ratio 68
27.3 Cross-talk ratio 69
27.3.1 WORM track test method 69
27.4 Timing Jitter 69
27.5 Media thermal interaction 69

Section 6 - Characteristics of user data 70

28 Method of testing 70
28.1 Environment 70
28.2 Reference Drive 70
28.2.1 Optics and mechanics 70
28.2.2 Read power 70
28.2.3 Read amplifiers 70
28.2.4 Mark Quality 70
28.2.5 Channel bit clock 71
28.2.6 Binary-to-digital converters 71
28.2.7 Error correction 71
28.2.8 Tracking 71

29 Minimum quality of a sector 71
29.1 Headers 71
29.1.1 Sector Mark 71
29.1.2 ID fields 71
29.2 User-written data 71
29.2.1 Recording field 71
29.2.2 Byte errors 71
29.2.3 Modulation method offset 71
29.2.4 Timing jitter 71

30 Data interchange requirements 71
30.1 Tracking 72
30.2 User-written data 72
30.3 Quality of disk 72

Annexes

A - Air cleanliness class 100 000 73

Copyright International Organization for Standardization
Provided by IHS under license with ISO
No reproduction or networking permitted without license from IHS Not for Resale

B - Edge distortion test 74

C - Compliance test 76

D - Test method for measuring the adsorbent force of the hub 78

E - CRC for ID fields 80

F - Interleave, CRC, ECC, Resync for the Data Field 81

G - Determination of Resync pattern 85

H - Read Channel for measuring NBSNR and jitter 90

J - Timing jitter measuring procedure 91

K - Definition of write pulse shape 92

L - Implementation Independent Mark Quality Determination (IIMQD) for the interchange of recorded media 93

M - Requirements for interchange 96

N - Measurement implementation for Cross-track signal 98

P - Values to be implemented in existing and future standards 99

Q - Office environment 100

R - Derivation of the operating climatic environment 101

S - Transportation 106

T - Sector retirement guidelines 107

U - Track deviation measurement 108

V - Measure of the vertical birefringence of the substrate 112

W - Laser Power Calibration for evaluation of media power sensitivity 114

Copyright International Organization for Standardization
Provided by IHS under license with ISO
No reproduction or networking permitted without license from IHS Not for Resale

Foreword

ISO (the International Organization for Standardization) and IEC (the International Electrotechnical Commission) form the specialized system for worldwide standardization. National bodies that are members of ISO or IEC participate in the development of International Standards through technical committees established by the respective organization to deal with particular fields of technical activity. ISO and IEC technical committees collaborate in fields of mutual interest. Other international organizations, governmental and non-governmental, in liaison with ISO and IEC, also take part in the work.

In the field of information technology, ISO and IEC have established a joint technical committee, ISO/IEC JTC 1. Draft International Standards adopted by the joint technical committee are circulated to national bodies for voting. Publication as an International Standard requires approval by at least 75 % of the national bodies casting a vote.

International Standard ISO/IEC 15486 was prepared by ECMA (as ECMA-238) and was adopted, under a special "fast-track procedure", by Joint Technical Committee ISO/IEC JTC 1, *Information technology*, in parallel with its approval by national bodies of ISO and IEC.

Annexes A to N form an integral part of this International Standard. Annexes P to W are for information only.

Copyright International Organization for Standardization
Provided by IHS under license with ISO
No reproduction or networking permitted without license from IHS Not for Resale

Information technology — Data interchange on 130 mm optical disk cartridges of type WORM (Write Once Read Many) using irreversible effects — Capacity: 2,6 Gbytes per cartridge

Section 1 - General

1 Scope

This International Standard specifies the characteristics of a 130 mm optical disk cartridge (ODC) of Type WORM (Write Once Read Many) with a capacity of 2,6 Gbytes. Type WORM ODCs use writing effects that are inherently irreversible. Written marks cannot be erased and attempted modification of the written marks are detectable.

This International Standard specifies

- the conditions for conformance testing and the Reference Drive;
- the environments in which the cartridges are to be operated and stored;
- the mechanical, physical and dimensional characteristics of the cartridge, so as to provide mechanical interchange ability between data processing systems;
- the format of the information on the disk, both embossed and user-written, including the physical disposition of the tracks and sectors, the error correction codes, the modulation methods used;
- the characteristics of the embossed information on the disk;
- the recording characteristics of the disk, enabling processing systems to write data onto the disk;
- the minimum quality of user-written data on the disk, enabling data processing systems to read data from the disk.

This International Standard provides for interchange between optical disk drives. Together with a standard for volume and file structure it provides for full data interchange between data processing systems.

2 Conformance

2.1 Optical Disk Cartridge (ODC)

An Optical Disk Cartridge shall be in conformance with this International Standard if it meets the mandatory requirements specified herein. A claim of conformance shall state that the ODC is of Type WORM.

2.2 Generating system

A generating system shall be in conformance with this International Standard if the ODC it generates is in accordance with 2.1.

2.3 Receiving system

A receiving system shall be in conformance with this International Standard if it is able to handle an ODC according to 2.1

2.4 Compatibility statement

A claim of conformance by a generating or receiving system with this International Standard shall include a statement listing any other International Optical Disk Cartridge standard(s) supported by the system for which conformance is claimed. This statement shall specify the number of the standard(s), including, where appropriate, the ODC Type(s), or the Types of side, and whether support includes reading only or both reading and writing.

3 Normative reference

The following standard contains provisions which, through reference in this text, constitute provisions of this International Standard. At the time of publication, the edition indicated was valid. All standards are subject to revision, and parties to agreements based on this International Standard are encouraged to investigate the possibility of applying the most recent edition of the standard indicated below. Members of IEC and ISO maintain registers of currently valid International Standards.

IEC 950:1991, *Safety of information technology equipment.*

Copyright International Organization for Standardization
Provided by IHS under license with ISO
No reproduction or networking permitted without license from IHS Not for Resale

4 Definitions

For the purposes of this International Standard, the following definitions apply.

4.1 band: An annular area within the user zone on the disk having a constant clock frequency.

4.2 case: The housing for an optical disk, that protects the disk and facilitates disk interchange.

4.3 clamping zone: The annular part of the disk within which the clamping force is applied by the clamping device.

4.4 control track: A track containing the information on media parameters and format necessary for writing, reading and erasing (read/write disks only) the remaining tracks on the optical disk.

4.5 Cyclic Redundancy Check (CRC): A method for detecting errors in data.

4.6 defect management: A method for handling the defective areas on the disk.

4.7 disk reference plane: A plane defined by the perfectly flat annular surface of an ideal spindle onto which the clamping zone of the disk is clamped, and which is normal to the axis of rotation.

4.8 entrance surface: The surface of the disk on to which the optical beam first impinges.

4.9 Error Correction Code (ECC): An error-detecting code designed to correct certain kinds of errors in data.

4.10 format: The arrangement or layout of information on the disk.

4.11 hub: The central feature on the disk which interacts with the spindle of the disk drive to provide radial centring and the clamping force.

4.12 interleaving: The process of allocating the physical sequence of units of data so as to render the data more immune to burst errors.

4.13 land and groove: A trench-like feature of the disk, applied before the recording of any information, and used to define the track location. The groove is located nearer to the entrance surface than the land with which it is paired to form a track.

4.14 logical track: 17 consecutive sectors in one or more physical tracks. The first sector of each logical track is assigned sector number 0.

4.15 mark: A feature of the recording layer which may take the form of a crystalline region a pit, or any other type or form that can be sensed as a reflectivity change by the optical system. The pattern of marks represents the data on the disk.

Note - Subdivisions of a sector which are named "mark" are not marks in the sense of this definition

4.16 mark edge: The transition between a region with a mark and one without a mark or vice versa, along the track.

4.17 mark edge recording: A recording method which uses a mark edge to represent a Channel bit.

4.18 optical disk: A disk that will accept and retain information in the form of marks in a recording layer, that can be read with an optical beam.

4.19 optical disk cartridge (ODC): A device consisting of a case containing an optical disk.

4.20 physical track: The path which is followed by the focus of the optical beam during one revolution of the disk. This path is not directly addressable.

4.21 polarization: The direction of polarization of an optical beam is the direction of the electric vector of the beam.

Note - The plane of polarization is the plane containing the electric vector and the direction of propagation of the beam. The polarization is right-handed when, to an observer looking in the direction of propagation of the beam, the end-point of the electric vector would appear to describe an ellipse in the clockwise sense.

4.22 pre-recorded mark: An unalterable mark recorded or embossed onto the disk prior to customer use.

4.23 read power: The read power is the optical power, incident at the entrance surface of the disk, used when reading.

Note - It is specified as a maximum power that may be used without damage to the written data. Lower power may be used providing that the signal-to-noise ratio and other requirements of this International Standard are met.

4.24 recording layer: A layer of the disk on, or in, which data is written during manufacture and/or use.

4.25 Reed-Solomon code: An error detection and/or correction code which is particularly suited to the correction of errors which occur in bursts or are strongly correlated.

Copyright International Organization for Standardization
Provided by IHS under license with ISO
No reproduction or networking permitted without license from IHS Not for Resale

4.26 **space:** The area between marks along the track.

4.27 **spindle:** The part of the disk drive which contacts the disk and/or hub.

4.28 **substrate:** A transparent layer of the disk, provided for mechanical support of the recording layer, through which the optical beam accesses the recording layer.

4.29 **track pitch:** The distance between adjacent track centrelines, measured in a radial direction.

4.30 **write-inhibit hole:** A hole in the case which, when detected by the drive to be open, inhibits write operations.

4.31 **zone:** An annular area of the disk.

5 Conventions and notations

5.1 Representation of numbers

- A measured value is rounded off to the least significant digit of the corresponding specified value. It implies that a specified value of 1,26 with a positive tolerance of +0,01, and a negative tolerance of -0,02 allows a range of measured values from 1,235 to 1,275.
- Letters and digits in parentheses represent numbers in hexadecimal notation.
- The setting of a bit is denoted by ZERO or ONE.
- Numbers in binary notation and bit combinations are represented by strings of digits 0 and 1.
- Numbers in binary notation and bit combinations are shown with the most significant bit to the left.
- Negative values of numbers in binary notation are given in TWO's complement.
- In each field the data is recorded so that the most significant byte (byte 0) is recorded first. Within each byte the least significant bit is numbered 0 and is recorded last, the most significant bit (numbered 7 in an 8-bit byte) is recorded first. This order of recording applies also to the data input of the Error Detection and Correction circuits and their output.

5.2 Names

The names of entities, e.g. specific tracks, fields, etc., are given with a capital initial.

6 List of acronyms

ALPC	Auto Laser Power Control
AM	Address Mark
CRC	Cyclic Redundancy Code
DMA	Defect Management Area
DMP	Defect Management Pointers
DST	Disk Structure Table
ECC	Error Correction Code
EDAC	Error Detection And Correction Code
ID	Identifier
LBA	Logical Block Address
LSB	Least Significant Byte
MO	Magneto-Optical
MSB	Most Significant Byte
ODC	Optical Disk Cartridge
PA	Postamble
PDL	Primary Defect List
PRA	Primary Reserved Area
PEP	Phase-Encoded Part of the Control Tracks
RLL(1,7)	Run Length Limited (code)
R-S	Reed-Solomon (code)
R/W	Rewritable
R-S/LDC	Reed-Solomon Long Distance Code
SCSI	Small Computer System Interface
SDL	Secondary Defect List
SFP	Standard Formatted Part of the Control Tracks

Copyright International Organization for Standardization
Provided by IHS under license with ISO
No reproduction or networking permitted without license from IHS Not for Resale

SM	Sector Mark
SRA	Secondary Reserved Area
TIA	Time Interval Analyzer
VFO	Variable Frequency Oscillator
WO	Write Once
WORM	Write Once Read Many
ZCAV	Zoned Constant Angular Velocity

7 General description of the optical disk cartridge

The optical disk cartridge which is the subject of this International Standard consists of a case containing an optical disk.

The case is a protective enclosure for the disk. It has access windows covered by a shutter. The windows are automatically uncovered by the drive when the cartridge is inserted into it.

The optical disk consists of two sides assembled together with their recording layers on the inside.

The optical disk is recordable on both sides. Data is written onto the disk with a focused optical beam as marks in the recording layer using irreversible effects, such that the marks cannot be erased or transformed back into an unrecorded state. The marks can be formed by either a phase transformation process, an ablative process, or any other irreversible process. The data are read by detecting the intensity modulation of the reflected beam caused by the difference of reflectivity of the recorded marks and the unrecorded regions. The beam accesses the recording layer through the transparent substrate of the disk.

8 General requirements

8.1 Environments

8.1.1 Test environment

The test environment is the environment where the air immediately surrounding the optical disk cartridge has the following properties:

temperature	: 23 °C ± 2 °C
relative humidity	: 45 % to 55 %
atmospheric pressure	: 60 kPa to 106 kPa
air cleanliness	: Class 100 000 (see annex A)

No condensation on or in the optical disk cartridge shall occur. Before testing, the optical disk cartridge shall be conditioned in this environment for 48 h minimum. It is recommended that, before testing, the entrance surface of the disk be cleaned according to the instructions of the manufacturer of the disk.

Unless otherwise stated, all tests and measurements shall be made in this test environment.

8.1.2 Operating environment

This International Standard requires that an optical disk cartridge which meets all requirements of this International Standard in the specified test environment provides data interchange over the specified ranges of environmental parameters in the operating environment (See also annex Q).

The operating environment is the environment where the air immediately surrounding the optical disk cartridge has the following properties:

temperature	: 5 °C to 55 °C
relative humidity	: 3 % to 85 %
absolute humidity	: 1 g/m^3 to 30 g/m^3
atmospheric pressure	: 60 kPa to 106 kPa
temperature gradient	: 10 °C/h max.
relative humidity gradient	: 10 %/h max.
air cleanliness	: office environment (see Q.1)

Copyright International Organization for Standardization
Provided by IHS under license with ISO
No reproduction or networking permitted without license from IHS Not for Resale

No condensation on or in the optical disk cartridge shall occur. If an optical disk cartridge has been exposed to conditions outside those specified in this clause, it shall be acclimatized in an allowed operating environment for at least 2 hours before use. (See also annex R).

8.1.3 Storage environment

The optical disk cartridge without any protective enclosure shall not be stored in an environment outside the range allowed for storage. The storage environment is defined as an environment where the air immediately surrounding the optical disk cartridge has the following properties:

temperature	: -10 °C to 55 °C
relative humidity	: 3 % to 90 %
absolute humidity	: 1 g/m^3 to 30 g/m^3
atmospheric pressure	: 60 kPa to 106 kPa
temperature gradient	: 15 °C/h max.
relative humidity gradient	: 10 %/h max.
air cleanliness	: Office environment (see Q.1)

No condensation on or in the optical disk cartridge shall occur.

8.1.4 Transportation

This International Standard does not specify requirements for transportation; guidance is given in annex S.

8.2 Temperature shock

The optical disk cartridge shall withstand a temperature shock of up to 20 °C when inserted into, or removed from, the drive.

8.3 Safety requirements

The cartridge shall satisfy the safety requirements of IEC 950, when used in the intended manner or in any foreseeable use in an information processing system.

8.4 Flammability

The cartridge and its components shall be made from materials that comply with the flammability class for HB materials, or better, as specified in IEC 950.

9 Reference Drive

The Reference Drive is a drive several critical components of which have well defined properties and which is used to test the write and read parameters of the disk for conformance to this International Standard. The critical components vary from test to test. This clause gives an outline of all components; components critical for tests in specific clauses are specified in those clauses.

9.1 Optical system

The basic set-up of the optical system of the Reference Drive used for measuring the write and read parameters is shown in figure 1. Different components and locations of components are permitted, provided that the performance remains the same as that of the set-up in figure 1. The optical system shall be such that the detected light reflected from the entrance surface of the disk is minimized so as not to influence the accuracy of the measurements.

Copyright International Organization for Standardization
Provided by IHS under license with ISO
No reproduction or networking permitted without license from IHS Not for Resale

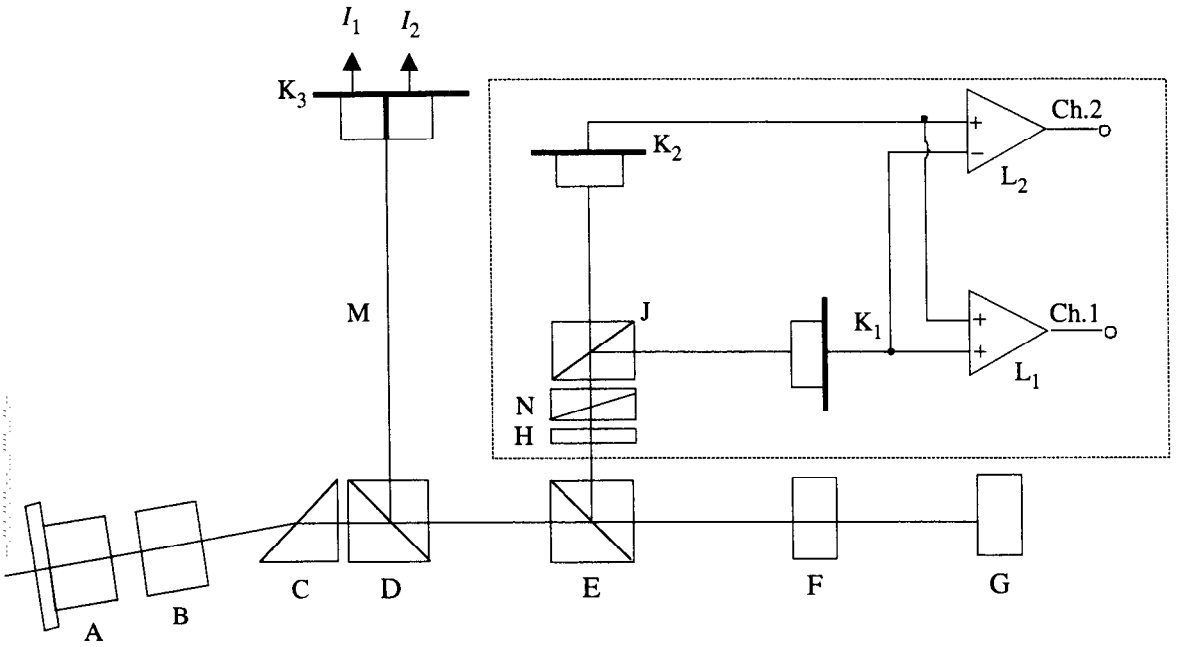

95-0041-A

A	Laser diode	H	Optional half-wave plate
B	Collimator lens	I_1,I_2	Tracking signals from photodiode K_3
C	Optional shaping prism	J	Polarizing beam splitter
Ch.1	Channel 1	K_1,K_2	Photodiodes for Channels 1 and 2
Ch.2	Channel 2	K_3	Split photodiode
D	Beam splitter	L_1,L_2	d.c.-coupled amplifiers
E	Polarizing beam splitter	M	Tracking Channel (see 20.3)
F	Objective lens	N	Phase retarder
G	Optical disk		

Figure 1 - Optical system of the Reference Drive

In the absence of polarization changes in the disk, the polarizing beam splitter J shall be aligned to make the signal of detector K_1 equal to that of detector K_2. The direction of polarization in this case is called the neutral direction. The phase retarder N shall be adjusted such that the optical system does not have more than 2,5° phase retardation between the neutral polarization and the polarization perpendicular to it. This position of the retarder is called the neutral position.

The phase retarder can be used for the measurement of the narrow-band signal-to-noise ratio (see 27.2).

The beam splitter J shall have a p-s intensity reflectance ratio of at least 100.

The beam splitter E shall have an intensity reflectance R_p from F to H of nominally 0,30 for the neutral polarization direction. The reflectance R_s for the polarization perpendicular to the neutral direction shall be nominally 0,95. The actual value of R_s shall not be smaller than 0,90.

The imbalance of the difference signal is specified for a beam splitter with nominal reflectance. If the measurement is made on a drive with reflectance's R_p' and R_s' for beam splitter E, then the measured imbalance shall be multiplied by

$$\sqrt{\frac{R_s R'_p}{R_p R'_s}}$$

to make it correspond to the nominal beam splitter E.

Copyright International Organization for Standardization
Provided by IHS under license with ISO
No reproduction or networking permitted without license from IHS Not for Resale

The output of Channel 1 is the sum of the currents through photodiodes K_1 and K_2 , and is used for reading embossed marks and the user-written marks. The output of Channel 2 is the difference between photo-diode currents.

9.2 Optical beam

The focused optical beam used for writing and reading data shall have the following properties:

a) Wavelength (λ)	685 nm $^{+10\ nm}_{-10\ nm}$
b) Wavelength (λ) divided by the numerical aperture of the objective lens (NA)	λ / NA = 1,245 µm ± 0,018 µm
c) Filling D/W of the aperture of the objective lens	0,85 ± 0,05
d) Variance of the wavefront of the optical beam near the recording layer	0 to λ^2/ 330
e) Polarization	Linear - parallel to the groove
f) Extinction ratio	0,01 max.

g) The optical power and pulse width for writing and reading shall be as specified in later clauses of this International Standard.

D is the diameter of the lens aperture and W is the beam diameter of the Gaussian beam where the intensity is $1/e^2$ of the maximum intensity.

The extinction ratio is the ratio of the minimum over the maximum power observed behind a linear polarizer in the optical beam, which is rotated over at least 180°.

9.3 Read Channels

Channel 1 shall be provided to generate signals from the marks in the recording layer. Unless otherwise stated, the signal of Channel 1 is not equalized before detection. This Channel shall be used for reading the embossed marks using the diffraction of the optical beam by the marks, and shall be used for reading the written marks using the change in reflectivity of the marks. Channel 2 is used to obtain birefringence information of the disk from the signal imbalance of unwritten tracks. The read amplifiers after the photo-detectors in Channel 1 and Channel 2 shall have a flat response within 1 dB from d.c. to 28 MHz.

The signals from Channel 1 and 2 are not equalized before detection. The signals shall be low-pass filtered with a 3-pole Butterworth filter with a cut-off frequency of one half the Channel clock frequency.

9.4 Tracking

The Tracking Channel of the drive provides the tracking error signals to control the servos for the axial and radial tracking of the optical beam. The method of generating the axial tracking error is not specified for the Reference Drive. The radial tracking error is generated by a split photodiode detector in the tracking Channel. The division of the diode runs parallel to the image of the tracks on the diode.

The requirements for the accuracy with which the focus of the optical beam must follow the tracks is specified in 20.2.4.

9.5 Rotation of the disk

The spindle shall position the disk as specified in 12.4. It shall rotate the disk at 50,0 Hz ± 0,5 Hz. The direction of rotation shall be counterclockwise when viewed from the objective lens.

Section 2 - Mechanical and physical characteristics

10 Dimensional and physical characteristics of the case

10.1 General description of the case

The case (see figure 3) is a rigid protective container of rectangular shape. It has spindle windows on both sides to allow the spindle of the drive to clamp the disk by its hub. Both sides of the case have a head window, one for the optical head of the drive, the other for the magnetic head of a multifunction drive that provides magnetic fields when using MO rewritable media.

Copyright International Organization for Standardization
Provided by IHS under license with ISO
No reproduction or networking permitted without license from IHS Not for Resale

A shutter uncovers the windows upon insertion into the drive, and automatically covers them upon removal from the drive. The case has write-inhibit, reflectance detection, and gripper slots for an autochanger.

10.2 Relationship of Sides A and B

The features essential for physical interchangeability are represented in figure 3. When Side A of the cartridge faces upwards, Side A of the disk faces downwards. Sides A and B of the case are identical as far as the features given here are concerned, except as noted below. The description is given for one side only. References to Sides A and B can be changed to B or A respectively.

Only the shutter and the slot for the shutter opener, described in 10.5.10 and 10.5.11, are not identical for both sides of the case.

10.3 Reference axes and case reference planes

There is a reference plane P for each side of the case. Each reference plane P contains two orthogonal axes X and Y to which the dimensions of the case are referred. The intersection of the X and Y axes defines the centre of the location hole. The X axis extends through the centre of the alignment hole.

10.4 Case Drawings

The case is represented schematically by the following drawings.

- Figure 2 shows the hub dimensions.
- Figure 3 shows a composite drawing of Side A of the case in isometric form, with the major features identified from Side A.
- Figure 4 shows the envelope of the case with respect to a location hole at the intersection of the X and Y axes and reference plane P.
- Figure 5 shows the surfaces S1, S2, S3 and S4 which establish the reference plane P.
- Figure 5a shows the details of surface S3.
- Figure 6 shows the details of the insertion slot and detent.
- Figure 7 shows the gripper slots, used for automatic handling.
- Figure 8 shows the write-inhibit holes.
- Figure 9 shows the media ID sensor holes.
- Figure 10 shows the shutter sensor notch.
- Figure 11 shows the head and motor window.
- Figure 12 shows the shutter opening features.
- Figure 13 shows the capture cylinder.
- Figure 14 shows the user label areas.

10.5 Dimensions of the case

The dimensions of the case shall be measured in the test environment. The dimensions of the case in an operating environment can be estimated from the dimensions specified in this clause.

10.5.1 Overall dimensions

The total length of the case (see figure 4) shall be

$$L_1 = 153{,}0 \text{ mm} \pm 0{,}4 \text{ mm}$$

The distance from the top of the case to the reference axis X shall be

$$L_2 = 127{,}0 \text{ mm} \pm 0{,}3 \text{ mm}$$

The distance from the bottom of the case to the reference axis X shall be

$$L_3 = 26{,}0 \text{ mm} \pm 0{,}3 \text{ mm}$$

The total width of the case shall be

$$L_4 = 135{,}0 \text{ mm} \begin{matrix} +\,0{,}0 \text{ mm} \\ -\,0{,}6 \text{ mm} \end{matrix}$$

The distance from the left-hand side of the cartridge to the reference axis Y shall be

Copyright International Organization for Standardization
Provided by IHS under license with ISO
No reproduction or networking permitted without license from IHS Not for Resale

$$L_5 = 128{,}5 \text{ mm} \begin{matrix} +\ 0{,}0 \text{ mm} \\ -\ 0{,}5 \text{ mm} \end{matrix}$$

The distance from the right-hand side of the cartridge to the reference axis Y shall be

$$L_6 = 6{,}5 \text{ mm} \pm 0{,}2 \text{ mm}$$

The width shall be reduced on the top by the radius

$$R_1 = L_4$$

originating from a point defined by L_5 and

$$L_7 = 101{,}0 \text{ mm} \pm 0{,}3 \text{ mm}$$

The two corners of the top shall be rounded with a radius

$$R_2 = 1{,}5 \text{ mm} \pm 0{,}5 \text{ mm}$$

and the two corners at the bottom with a radius

$$R_3 = 3{,}0 \text{ mm} \pm 1{,}0 \text{ mm}$$

The thickness of the case shall be

$$L_8 = 11{,}00 \text{ mm} \pm 0{,}30 \text{ mm}$$

The eight long edges of the case shall be rounded with a radius

$$R_4 = 1{,}0 \text{ mm max.}$$

10.5.2 Location hole

The centre of the location hole (see figure 4) shall coincide with the intersection of the reference axes X and Y. It shall have a square form with a side length of

$$L_9 = 4{,}10 \text{ mm} \begin{matrix} +\ 0{,}00 \text{ mm} \\ -\ 0{,}06 \text{ mm} \end{matrix}$$

held to a depth of

$$L_{10} = 1{,}5 \text{ mm (i.e. typical wall thickness)}$$

after which a cavity extends through to the alignment hole on the opposite side of the case.

The lead-in edges shall be rounded with a radius

$$R_5 = 0{,}5 \text{ mm max.}$$

10.5.3 Alignment hole

The centre of the alignment hole (see figure 4) shall lie on reference axis X at a distance of

$$L_{11} = 122{,}0 \text{ mm} \pm 0{,}2 \text{ mm}$$

from the reference axis Y.

The dimensions of the hole shall be

$$L_{12} = 4{,}10 \text{ mm} \begin{matrix} +\ 0{,}00 \text{ mm} \\ -\ 0{,}06 \text{ mm} \end{matrix}$$

and

$$L_{13} = 5{,}0 \text{ mm} \begin{matrix} +\ 0{,}2 \text{ mm} \\ -\ 0{,}0 \text{ mm} \end{matrix}$$

held to a depth of L_{10}, after which a cavity extends through to the location hole on the opposite side of the case.

Copyright International Organization for Standardization
Provided by IHS under license with ISO
No reproduction or networking permitted without license from IHS
Not for Resale

The lead-in edges shall be rounded with radius R_5.

10.5.4 Surfaces on Reference Planes P

The reference plane P (see figures 5 and 5a) for a side of the case shall contain four surfaces (S1, S2, S3 and S4) on that side of the case, specified as follows:

- Two circular surfaces S1 and S2.

Surface S1 shall be a circular area centred around the square location hole and have a diameter of

D_1 = 9,0 mm min.

Surface S2 shall be a circular area centred around the rectangular alignment hole and have a diameter of

D_2 = 9,0 mm min.

- Two elongated surfaces S3 and S4, that follow the contour of the cartridge and shutter edges.

Surfaces S3 and S4 are shaped symmetrically.

Surface S3 shall be defined by two circular sections with radii

R_6 = 1,5 mm ± 0,1 mm

with an origin given by

L_{14} = 4,0 mm ± 0,1 mm

L_{15} = 86,0 mm ± 0,3 mm,

and

R_7 = 1,5 mm ± 0,1 mm

with an origin given by

L_{16} = 1,9 mm ± 0,1 mm

L_{17} = 124,5 mm ± 0,3 mm

The arc with radius R_7 shall continue on the right hand side with radius

$$R_8 = 134{,}0 \text{ mm} \begin{matrix} +\,0{,}2 \text{ mm} \\ -\,0{,}7 \text{ mm} \end{matrix}$$

which is a dimension resulting from $L_5 + L_{14} + R_6$ with an origin given by L_5 and L_7. A straight, vertical line shall smoothly join the arc of R_6 to the arc of R_8.

The left-hand side of S3 shall be bounded by radius

R_9 = 4,5 mm ± 0,3 mm

which is a dimension resulting from $L_{18} + L_{14} - R_6$ with an origin given by

L_{18} = 2,0 mm ± 0,1 mm

L_{19} = 115,5 mm ± 0,3 mm.

The left-hand side of the boundary shall be closed by two straight lines. The first one shall smoothly join the arc of R_6 to the arc of R_9. The second one shall run from the left hand tangent of R_7 to its intersection with R_9. Along the left hand side of surface S3 there shall be a zone to protect S3 from being damaged by the shutter. In order to keep this zone at a minimum practical width

R_{10} = 4,1 mm max.

This radius originates from the same point as R_9.

Copyright International Organization for Standardization
Provided by IHS under license with ISO
No reproduction or networking permitted without license from IHS Not for Resale

10.5.5 Insertion slots and detent features

The case shall have two symmetrical insertion slots with embedded detent features (see figure 6). The slots shall have a length of

$$L_{20} = 26{,}0 \text{ mm} \pm 0{,}3 \text{ mm}$$

a width of

$$L_{21} = 6{,}0 \text{ mm} \begin{matrix} +\,0{,}3 \text{ mm} \\ -\,0{,}0 \text{ mm} \end{matrix}$$

and a depth of

$$L_{22} = 3{,}0 \text{ mm} \pm 0{,}1 \text{ mm}$$

located

$$L_{23} = 2{,}5 \text{ mm} \pm 0{,}2 \text{ mm}$$

from reference plane P.

The slots shall have a lead-in chamfer given by

$$L_{24} = 0{,}5 \text{ mm max.}$$

$$L_{25} = 5{,}0 \text{ mm max.}$$

The detent notch shall be a semi-circle of radius

$$R_{11} = 3{,}0 \text{ mm} \pm 0{,}2 \text{ mm}$$

with the origin given by

$$L_{26} = 13{,}0 \text{ mm} \pm 0{,}3 \text{ mm}$$

$$L_{27} = 2{,}0 \text{ mm} \pm 0{,}1 \text{ mm}$$

$$L_{73} = 114{,}0 \text{ mm} \pm 0{,}3 \text{ mm}$$

The dimensions L_2, L_{26}, L_{73} are interrelated, their values shall be such so that they are all three within specification.

10.5.6 Gripper slots

The case shall have two symmetrical gripper slots (see figure 7) with a depth of

$$L_{28} = 5{,}0 \text{ mm} \pm 0{,}3 \text{ mm}$$

from the edge of the case and a width of

$$L_{29} = 6{,}0 \text{ mm} \pm 0{,}3 \text{ mm}$$

The upper edge of a slot shall be

$$L_{30} = 12{,}0 \text{ mm} \pm 0{,}3 \text{ mm}$$

above the bottom of the case.

10.5.7 Write-inhibit holes

Sides A and B shall each have a write-inhibit hole (see figure 8). The case shall include a device for opening and closing each hole. The hole at the left-hand side of Side A of the case, is the write-inhibit hole for Side A of the disk. The protected side of the disk shall be made clear by inscriptions on the case or by the fact that the device for Side A of the disk can only be operated from Side A of the case.

When writing on Side A of the disk is not allowed, the write-inhibit hole shall be open all through the case. It shall have a diameter

$$D_3 = 4{,}0 \text{ mm min.}$$

Its centre shall be specified by

Copyright International Organization for Standardization
Provided by IHS under license with ISO
No reproduction or networking permitted without license from IHS Not for Resale

L_{31} = 8,0 mm ± 0,2 mm

L_{32} = 111,0 mm ± 0,3 mm

on Side A of the case.

When writing is allowed on Side A of the disk, the write-inhibit hole shall be closed on Side A of the case, at a depth of typically L_{10}, i.e. the wall thickness of the case. In this state, the opposite side of the same hole, at Side B of the case, shall be closed and not recessed from the reference plane P of Side B of the case by more than

L_{33} = 0,5 mm

The opposite side of the write-inhibit hole for protecting Side B of the disk shall have a diameter D_3. Its centre shall be specified by L_{31} and

L_{34} = 11,0 mm ± 0,2 mm

on Side A of the case.

10.5.8 Media sensor holes

There shall be two sets of four media sensor holes (see figure 9). The set of holes at the lower left hand corner of Side A of the case pertains to Side A of the disk. The holes shall extend through the case, and have a diameter of

$$D_4 = 4{,}0 \text{ mm}\ {}^{+\ 0{,}3 \text{ mm}}_{-\ 0{,}0 \text{ mm}}$$

the positions of their centres shall be specified by L_{32}, L_{34} and

L_{35} = 19,5 mm ± 0,2 mm

L_{36} = 17,0 mm ± 0,2 mm

L_{37} = 23,0 mm ± 0,2 mm

L_{38} = 29,0 mm ± 0,2 mm

L_{39} = 93,0 mm ± 0,3 mm

L_{40} = 99,0 mm ± 0,3 mm

L_{41} = 105,0 mm ± 0,3 mm

A hole is deemed to be open when there is no obstruction in this hole over a diameter D_4 all through the case.

A hole for Side A of the disk is deemed to be closed, when the hole is closed on both Side A and Side B of the case. The closure shall be recessed from reference plane P by

L_{42} = 0,1 mm max.

The holes are numbered consecutively from 1 to 4. Number 1 is the hole closest to the left hand edge of the case. The meaning of the holes shall be as in table 1.

Hole No. 1 shall be closed to indicate low reflectance disks.

Hole No. 2 shall be closed to indicate that this side of the disk can be used.

An optical disk cartridge conforming to this International Standard does not use holes No. 3 and No. 4. These holes shall be closed

Copyright International Organization for Standardization
Provided by IHS under license with ISO
No reproduction or networking permitted without license from IHS Not for Resale

Table 1 - Media sensor holes

Sensor hole No.	Indication	Closed	Open
1	Reflectance range of disks	Low reflectance	Not permitted in this International Standard
2	Disk side accessible	Yes	Not permitted in this International Standard
3	Not used	Always	-
4	Not used	Always	-

10.5.9 Head and motor window

The case shall have a window on each side to enable the optical head and the motor to access the disk (see figure 11). The dimensions are referenced to a centreline, located at a distance of

L_{46} = 61,0 mm ± 0,2 mm

to the left of reference axis Y.

The width of the head access shall be

L_{47} = 20,00 mm min.

L_{48} = 20,00 mm min.

and its height shall extend from

L_{49} = 118,2 mm min. to

L_{50} = 57,0 mm max.

The four inside corners shall be rounded with a radius of

R_{12} = 3,0 mm max.

The motor access shall have a diameter of

D_5 = 35,0 mm min.

and its centre shall be defined by L_{46} and

L_{51} = 43,0 mm ± 0,2 mm

10.5.10 Shutter

The case shall have a spring-loaded, unidirectional shutter (see figure 12) with an optional latch, designed to completely cover the head and motor windows when closed. A shutter movement of 41,5 mm minimum shall be sufficient to ensure that the head and motor window is opened to the minimum size specified in 10.5.9. The shutter shall be free to slide in a recessed area of the case in such a way as to ensure that the overall thickness of the case and shutter shall not exceed L_8.

The right-hand side of the top of the shutter shall have a lead-in ramp with an angle

A_2 = 16° max.

The distance from the reference planes P to the nearest side of the ramp shall be

L_{52} = 2,5 mm max.

The left hand side of the shutter shall not extend closer than

L_{52B} = 14,0 mm min.

to the datum plane.

Copyright International Organization for Standardization
Provided by IHS under license with ISO
No reproduction or networking permitted without license from IHS Not for Resale

10.5.11 Slot for shutter opener

The shutter shall have only one slot (see figure 12) in which the shutter opener of the drive can engage to open the shutter. The slot shall be dimensioned as follows:

When the shutter is closed, the vertical edge used to push the shutter open shall be located at a distance of

$$L_{53} = 34{,}5 \text{ mm} \pm 0{,}5 \text{ mm}$$

from reference axis Y on Side B of the case.

The length of the slot shall be

$$L_{54} = 4{,}5 \text{ mm} \pm 0{,}1 \text{ mm}$$

and the angle of the lead-out ramp shall be

$$A_3 = 52{,}5° \pm 7{,}5°$$

The depth of the slot shall be

$$L_{55} = 3{,}5 \text{ mm} \pm 0{,}1 \text{ mm}$$

The width of the slot from the reference plane P of Side B of the case shall be

$$L_{56} = 6{,}0 \text{ mm} \begin{matrix} +\,0{,}5 \text{ mm} \\ -\,0{,}0 \text{ mm} \end{matrix}$$

If a shutter latch is employed, the distance between the latch and reference plane P of Side B of the case shall be

$$L_{57} = 2{,}5 \text{ mm max.}$$

The edges of the case beneath the shutter, upon which the shutter door opening mechanism may slide, shall have a thickness of

$$B_1 = 1{,}0 \text{ mm min.}$$

located at

$$B_2 = 0{,}9 \text{ mm max.}$$

from plane P (see detail A in figure 12).

The four edges shall also be flat to within

STR (Straightness of surface) = 0,2 mm

in both planes for length C_1. (Length C_1 is defined by the manufacturer's shutter design. See detail in figure 12.)

10.5.12 Shutter sensor notch

The shutter sensor notch (see figure 10) is used to ensure that the shutter is fully open after insertion of the optical disk cartridge into the drive. Therefore, the notch shall be exposed only when the shutter is fully open.

The dimensions shall be

$$L_{43} = 3{,}5 \text{ mm} \pm 0{,}2 \text{ mm}$$

$$L_{44} = 71{,}0 \text{ mm} \pm 0{,}3 \text{ mm and}$$

$$L_{45} = 9{,}0 \text{ mm} \begin{matrix} +\,0{,}0 \text{ mm} \\ -\,2{,}0 \text{ mm} \end{matrix}$$

The notch shall have a lead-out ramp with an angle

$$A_1 = 45° \pm 2°$$

10.5.13 User label areas

The case shall have the following minimum areas for user labels (see figure 14):

– on Side A and Side B: 35,0 mm x 65,0 mm

Copyright International Organization for Standardization
Provided by IHS under license with ISO
No reproduction or networking permitted without license from IHS Not for Resale

– on the bottom side: 6,0 mm x 98,0 mm

These areas shall be recessed by 0,2 mm min. Their positions are specified by the following dimensions and relations between dimensions.

L_{61}	= 4,5 mm min.
$L_{62} - L_{61}$	= 65,0 mm min.
$L_{64} - L_{63}$	= 35,0 mm min.
L_{65}	= 4,5 mm min.
$L_{66} - L_{65}$	= 65,0 mm min.
$L_{67} + L_{68}$	= 35,0 mm min.
$L_8 - L_{71} - L_{72}$	= 6,0 mm min.
$L_4 - L_{69} - L_{70}$	= 98,0 mm min.

10.6 Mechanical characteristics

All requirements of this clause shall be met in the operating environment.

10.6.1 Materials

The case shall be constructed from any suitable materials such that it meets the requirements of this International Standard.

10.6.2 Mass

The mass of the case without the optical disk shall not exceed 150 g.

10.6.3 Edge distortion

The cartridge shall meet the requirement of the edge distortion test defined in annex B.

10.6.4 Compliance

The cartridge shall meet the requirement of the compliance (flexibility) test defined in annex C. The requirement guarantees that a cartridge can be constrained in the proper plane of operation within the drive.

10.6.5 Shutter opening force

The spring force on the shutter shall be such that the force required to open the shutter does not exceed 3 N.

It shall be sufficiently strong to close a free-sliding shutter, irrespective of the orientation of the case.

10.7 Drop test

The optical disk cartridge shall withstand dropping on each surface and on each corner from a height of 760 mm on to a concrete floor covered with a vinyl layer 2 mm thick. The cartridge shall withstand all such impacts without any functional failure.

11 Dimensional, mechanical and physical characteristics of the disk

11.1 General description of the disk

The disk shall consist of two sides.

Each disk side shall consist of a circular substrate with a hub on one face and a recording layer coated on the other face. The recording layer can be protected from environmental influences by a protective layer. The Formatted Zone (see clause 17) of the substrate shall be transparent to allow an optical beam to focus on the recording layer through the substrate.

The two disk sides shall be assembled with the recording layer facing inwards.

The circular hubs are in the centre of the disk. They interact with the spindle of the drive, and provide the. radial centring of the clamping force

11.2 Reference axis and plane of the disk

Some dimensions of the hub are referred to a Disk Reference Plane P (see figure 2). The Disk Reference Plane P is different from that described in 10.3 for the cartridge. P is defined by the perfectly flat annular surface of an ideal spindle onto which

Copyright International Organization for Standardization
Provided by IHS under license with ISO
No reproduction or networking permitted without license from IHS Not for Resale

the clamping zone of the disk is clamped, and which is normal to the axis of rotation of this spindle. This axis A passes through the centre of the centre hole of the hub, and is normal to Disk Reference Plane P in this zone.

11.3 Dimensions of the disk

The dimensions of the disk shall be measured in the test environment. The dimensions of the disk in an operating environment can be estimated from the dimensions specified in this clause.

The outer diameter of the disk shall be 130,0 mm nominal. The tolerance is determined by the movement of the disk inside the case allowed by 12.3 and 12.4.

The total thickness of the disk outside the hub area shall be 2,40 mm min. and 3,2 mm max.

The clamping zone is the area on the disk where the clamping mechanism of the optical drive grips the disk and is defined by D_6 and D_7. The Clearance zone is the area between the outer diameter of the clamping zone (D_6) and the inner diameter of the reflective zone (see clause 17). This Clearance zone shall be excluded from the total thickness requirement, however, within this zone there shall be no projection from the Disk Reference Plane P in the direction of the optical system of more than 0,22 mm.

11.3.1 Hub dimension

The outer diameter of the hub (see figure 2) shall be

$$D_8 = 25{,}0 \text{ mm} \begin{matrix} +\,0{,}0 \text{ mm} \\ -\,0{,}2 \text{ mm} \end{matrix}$$

The height of the hub shall be

$$h_1 = 2{,}2 \text{ mm} \begin{matrix} +\,0{,}0 \text{ mm} \\ -\,0{,}2 \text{ mm} \end{matrix}$$

The diameter of the centre hole of the hub shall be

$$D_9 = 4{,}004 \text{ mm} \begin{matrix} +\,0{,}012 \text{ mm} \\ -\,0{,}000 \text{ mm} \end{matrix}$$

The height of the top of the centring hole at diameter D_9, measured above the Disk Reference Plane P, shall be

$$h_2 = 1{,}9 \text{ mm min.}$$

The centring length at diameter D_9 shall be

$$h_3 = 0{,}5 \text{ mm min.}$$

The hole shall have a diameter larger than, or equal to, D_9 between the centring length and the Disk Reference Plane P. The hole shall extend through the substrate.

There shall be a radius at the rim of the hub at diameter D_9 with height

$$h_4 = 0{,}2 \text{ mm} \pm 0{,}1 \text{ mm}$$

At the two surfaces which it intersects, the radius shall be blended to prevent offsets or sharp ridges.

The height of the chamfer at the rim of the hub at diameter D_8 shall be

$$h_5 = 0{,}2 \text{ mm} \begin{matrix} +\,0{,}2 \text{ mm} \\ -\,0{,}0 \text{ mm} \end{matrix}$$

The angle of the chamfer shall be 45°, or a corresponding full radius shall be used.

The outer diameter if the magnetizable ring shall be

$$D_{10} = 19{,}0 \text{ mm min.}$$

The inner diameter of the magnetizable ring shall be

Copyright International Organization for Standardization
Provided by IHS under license with ISO
No reproduction or networking permitted without license from IHS Not for Resale

D_{11} = 8,0 mm max.

This thickness of the magnetizable material shall be

h_6 = 0,5 mm min.

The position of the top of the magnetizable ring relative to the Disk Reference Plane P shall be

$$h_7 = 2{,}2 \text{ mm} \begin{matrix} +0{,}0 \text{ mm} \\ -0{,}1 \text{ mm} \end{matrix}$$

The outer diameter of the clamping zone shall be

D_6 = 35,0 mm min.

The inner diameter of the zone shall be

D_7 = 27,0 mm max.

11.4 Mechanical characteristics

All requirements in this clause must be met in the operating environment.

11.4.1 Material

The disk shall be made from any suitable materials such that it meets the requirements of this International Standard. The only material properties specified by this International Standard are the magnetic properties of the magnetizable zone in the hub (see 11.3.1) and the optical properties of the substrate in the Formatted Zone (see 11.5).

11.4.2 Mass

The mass of the disk shall not exceed 120 g.

11.4.3 Moment of inertia

The moment of inertia of the disk relative to axis A shall not exceed 0,22 g·m^2.

11.4.4 Imbalance

The imbalance of the disk relative to axis A shall not exceed 0,01 g·m.

11.4.5 Axial deflection

The axial deflection of the disk is measured as the axial deviation of the recording layer. Thus it comprises the tolerances on the thickness of the substrate, on its index of refraction and the deviation of the entrance surface from the Disk Reference Plane P on each side of the disk. The nominal position of the recording layer with respect to the Disk Reference Plane P on each side of the disk is determined by the nominal thickness of the substrate.

The deviation of any point of the recording layer from its nominal position, in a direction normal to the Disk Reference Plane P, shall not exceed ± 0,15 mm for rotational frequencies of the disk as specified in 9.5. The deviation shall be measured by the optical system defined in clause 9.

11.4.6 Axial acceleration

The maximum allowed axial error e_{max} (see annex U) shall not exceed ± 0,8 µm, measured using the Reference Servo for axial tracking of the recording layer. The rotational frequency of the disk shall be as specified in 9.5. The stationary part of the motor is assumed to be motionless (no external disturbances). The measurement shall be made using a servo with the transfer function

$$H_s(i\omega) = \frac{1}{3} \times \left(\frac{\omega_0}{i\omega}\right)^2 \times \frac{1 + \dfrac{3i\omega}{\omega_0}}{1 + \dfrac{i\omega}{3\omega_0}}$$

where

$\omega = 2\pi f$

$\omega_0 / 2\pi$ = 1 500 Hz

Copyright International Organization for Standardization
Provided by IHS under license with ISO
No reproduction or networking permitted without license from IHS Not for Resale

$i=\sqrt{-1}$

or any other servo with $|1+H|$ within 20% of $|1+H_S|$ in the bandwidth of 50 Hz to 170 kHz. Thus, the disk shall not require an acceleration of more than 24,0 m/s^2 at low frequencies from the servo motor of the Reference Servo.

11.4.7 Radial runout

The radial runout of the tracks in the recording layer in the Information zone is measured as seen by the optical head of the Reference Drive. Thus it includes the distance between the axis of rotation of the spindle and reference axis A, the tolerances on the dimensions between axis A and the location of the track, and effects of non-uniformity's in the index of refraction.

The difference between the maximum and the minimum distance of any track from the axis of rotation, measured along a fixed radial line over one physical track of the disk, shall not exceed 50 µm as measured by the optical system under conditions of a hub mounted on a perfect sized test fixture shaft, for rotational frequencies of the disk as specified in 9.5.

11.4.8 Radial acceleration

The maximum allowed radial error e_{max} (see annex U) shall not exceed ± 0,11 µm, measured using the Reference Servo for radial tracking of the tracks. The rotational frequency of the disk shall be as specified in 9.5. The stationary part of the motor is assumed to be motionless (no external disturbances). The measurement shall be made using a servo with the transfer function

$$H_s(i\omega)=\frac{1}{3}\times\left(\frac{\omega_0}{i\omega}\right)^2\times\frac{1+\dfrac{3i\omega}{\omega_0}}{1+\dfrac{i\omega}{3\omega_0}}$$

where

$\omega=2\pi f$

$\omega_0/2\pi=2\ 300$ Hz

$i=\sqrt{-1}$

or any other servo with $|1+H|$ within 20% of $|1+Hs|$ n the bandwidth of 50 Hz to 170 kHz. Thus, the disk shall not require an acceleration of more than 7,5 m/s^2 at low frequencies from the servo motor of the Reference Servo.

11.4.9 Tilt

The tilt angle, defined as the angle which the normal to the entrance surface, averaged over a circular area of 1 mm diameter, makes with the normal to the Disk Reference Plane P, shall not exceed 3,2 mrad in the operating environment.

11.5 Optical characteristics

11.5.1 Index of refraction

Within the Formatted Zone (see 17) the index of refraction of the substrate shall be within the range from 1,46 to 1,60.

11.5.2 Thickness

The thickness of the substrate from the entrance surface to the recording layer, within the Formatted Zone shall be:

$$0{,}509\ 3 \times \frac{n^3}{n^2-1} \times \frac{n^2+0{,}265\ 0}{n^2+0{,}592\ 9}\ \text{mm} \pm 0{,}05\ \text{mm}$$

where n is the index of refraction.

11.5.3 Birefringence

The effect of the birefringence of the substrate is included in the measurement of the imbalance of the signals in Channel 2 of the Reference Drive (see clause 26)

11.5.4 Vertical Birefringence

The principal vertical birefringence value shall be contained as follows:

Copyright International Organization for Standardization
Provided by IHS under license with ISO
No reproduction or networking permitted without license from IHS Not for Resale

$$0 \leq |N_p - N_z| \leq 500 \times 10^{-6}$$

where N_p is the index of refraction along any direction in the plane of the disk and N_z is the index of refraction normal to the plane of the disk. (See annex V).

11.5.5 Reflectance

11.5.5.1 General

The reflectance R is the value of the reflectance on-land of an unrecorded and grooved area of the User Zone, measured through the substrate and does not include the reflectance of the entrance surface.

The nominal value R of the reflectance shall be specified by the manufacturer

- in byte 3 of the Control Track PEP Zone (see 17.3.2.1.4), and
- in byte 19 of the Control Track SFP Zone (see 17.4.2).

11.5.5.2 Measured value

The measured value R_m of the reflectance shall be measured under the conditions a) to f) of 9.2 and those of 20.2.2 using the split photo detector $(I_1 + I_2)_{OL}$.

Measurements shall be made in the User Zone in any track without embossed data fields.

11.5.5.3 Requirement

The value of R at the standard wavelength specified in 9.2 shall lie within the range of 0,15 to 0,40..

At any point in the User Zone, the value R_m shall be equal to R (1 ± 0,15) and lie within the allowed range.

This requirement specifies the acceptable range for R_m, for all disks within the same value R. Additionally, the variation of R_m shall meet the requirement

$$(R_{m\max} - R_{m\min}) / (R_{m\max} + R_{m\min}) \leq 0{,}13$$

where

$R_{m\max}$ is the maximum value of measured reflectance in the User Zone, and

$R_{m\min}$ is the minimum value of measured reflectance in the User Zone.

12 Interface between cartridge and drive

12.1 Clamping method

When the cartridge is inserted into the drive, the shutter of the case is opened and the drive spindle engages the disk. The disk is held against the spindle by an axial clamping force, provided by the magnetizable material in the hub and the magnets in the spindle. The radial positioning of the disk is provided by the centring of the axis of the spindle in the centre hole of the hub. A turntable of the spindle shall support the disk in its clamping zone, determining the axial position of the disk in the case.

12.2 Clamping force

The clamping force exerted by the spindle shall be less than 14 N.

The adsorbent force measured by the test device specified in annex D shall be in the range of 8,0 N to 12,0 N.

12.3 Capture cylinder

The capture cylinder (see figure 13) is defined as the volume in which the spindle can expect the centre of the hole of the hub to be at the maximum height of the hub, just prior to capture. The size of the cylinder limits the allowable play of the disk inside its cavity in the case. This cylinder is referred to perfectly located and perfectly sized alignment and location pins in the drive, and includes tolerances of dimensions of the case and the disk between the two pins mentioned and the centre of the hub. The bottom of the cylinder is parallel to the Disk Reference Plane P, and shall be located at a distance of

$$L_{58} = 0{,}5 \text{ mm min.}$$

above the Disk Reference Plane P of Side B of the case when Side A of the disk is to be used. The top of the cylinder shall be located at a distance of

$$L_{59} = 4{,}3 \text{ mm max.}$$

Copyright International Organization for Standardization
Provided by IHS under license with ISO
No reproduction or networking permitted without license from IHS Not for Resale

above the same Disk Reference Plane P, i.e. that of Side B. The diameter of the cylinder shall be

$$D_{12} = 3{,}0 \text{ mm max.}$$

Its centre shall be defined by the nominal values of L_{46} and L_{51}.

12.4 Disk position in the operating condition

When the disk is in the operating condition (see figure 13) within the drive, the position of the active recording layer shall be

$$L_{60} = 5{,}35 \text{ mm} \pm 0{,}15 \text{ mm}$$

above the Disk Reference Plane P of that side of the case that faces the optical system. Moreover, the torque to be exerted on the disk in order to maintain a rotational frequency of 50 Hz shall not exceed 0,01 N·m, when the axis of rotation is within a circle of diameter

$$D_{13} = 0{,}2 \text{ mm max.}$$

and a centre given by the nominal values of L_{46} and L_{51}.

Copyright International Organization for Standardization
Provided by IHS under license with ISO
No reproduction or networking permitted without license from IHS
Not for Resale

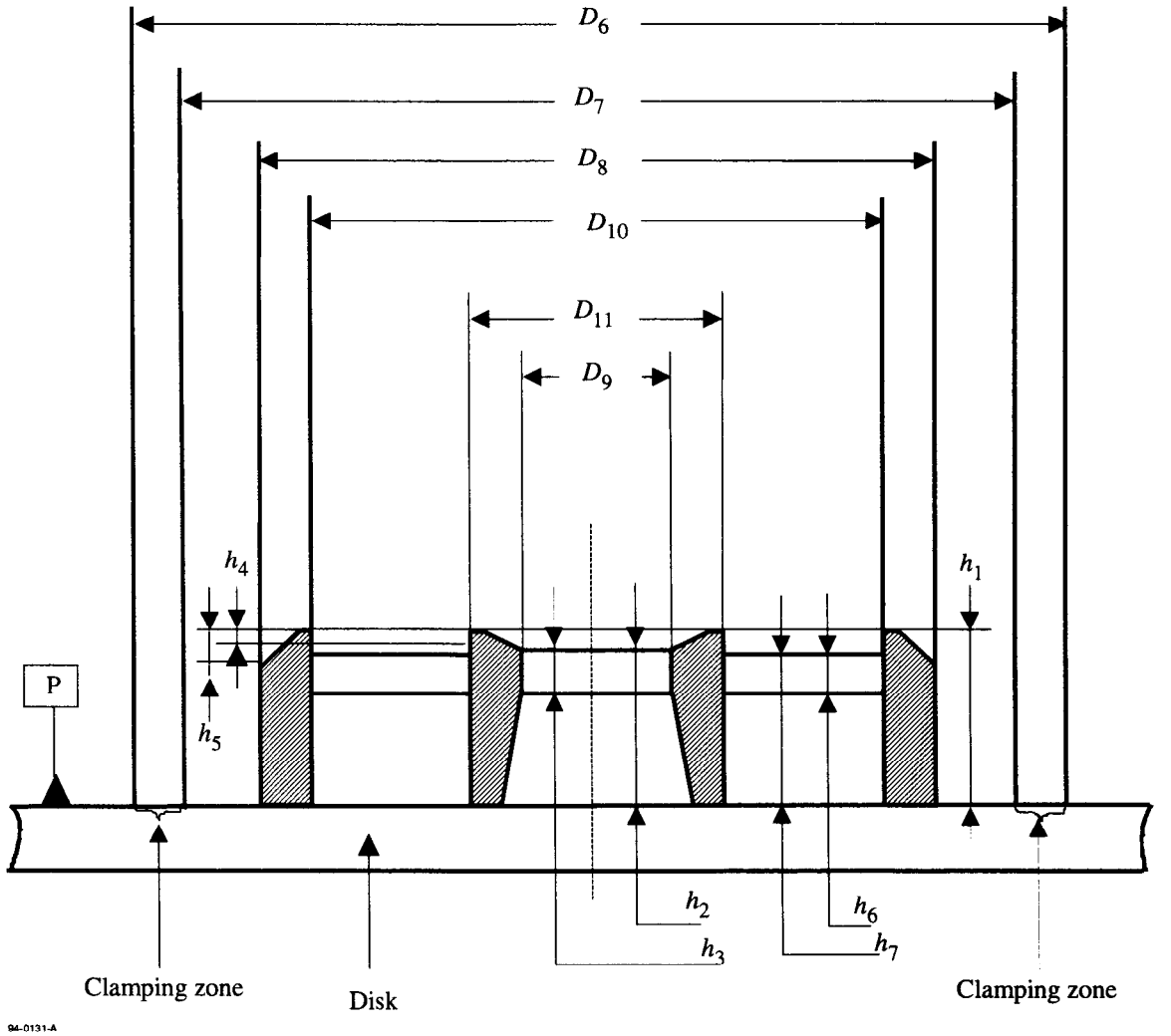

Figure 2 - Hub dimensions

Copyright International Organization for Standardization
Provided by IHS under license with ISO
No reproduction or networking permitted without license from IHS
Not for Resale

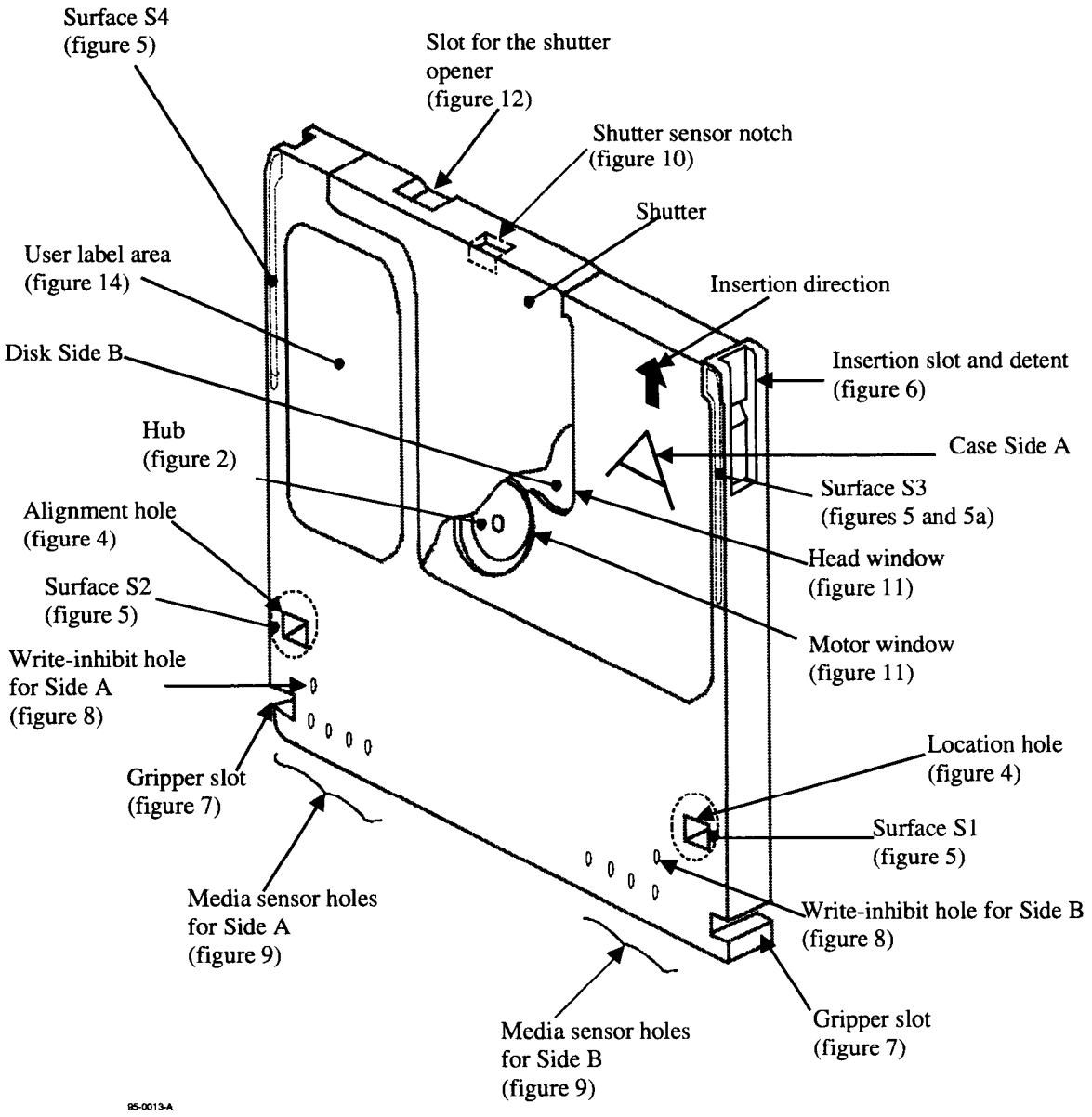

Figure 3 - Case

Copyright International Organization for Standardization
Provided by IHS under license with ISO
No reproduction or networking permitted without license from IHS
Not for Resale

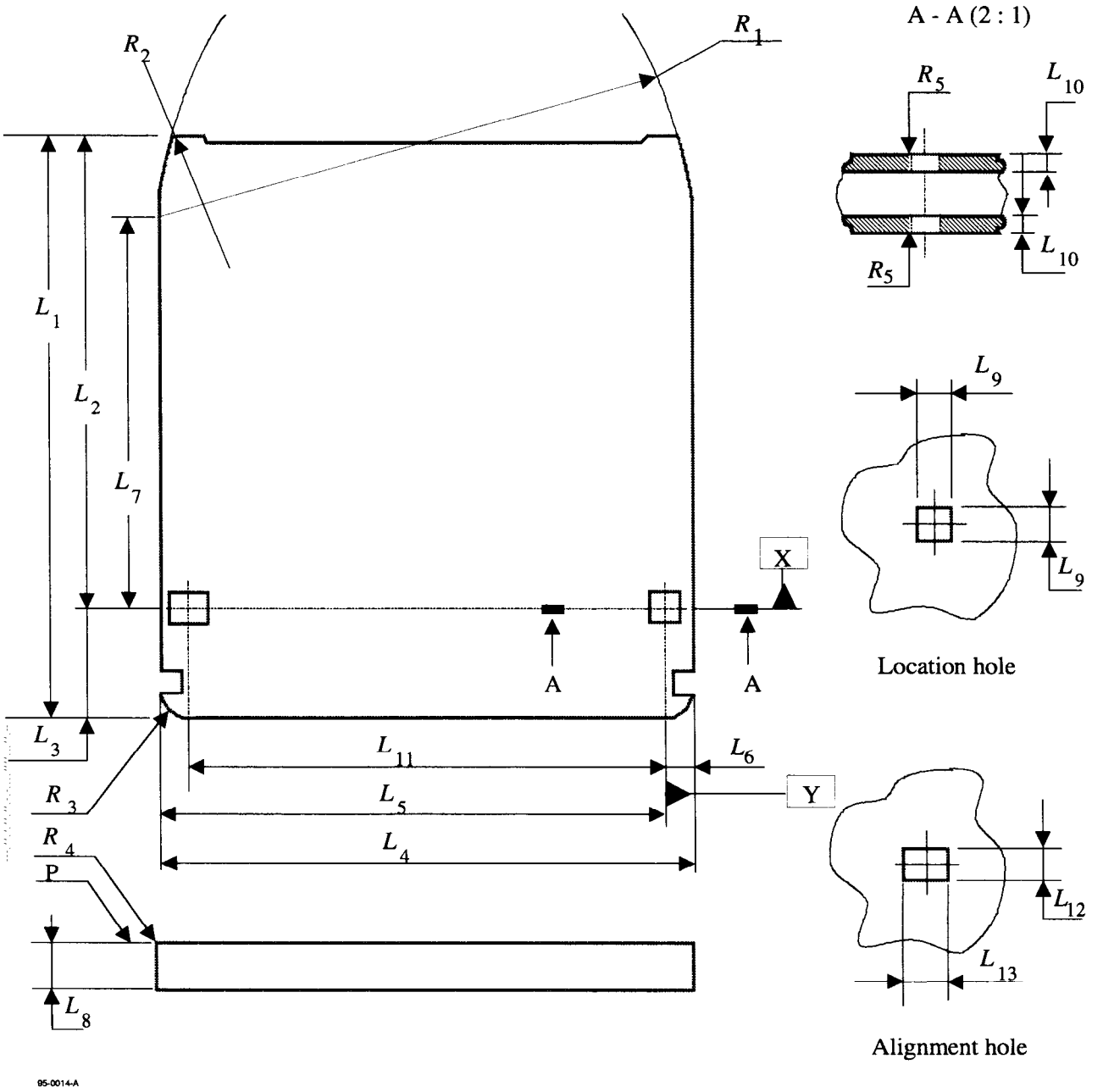

Figure 4 - Overall dimensions and reference axes

Copyright International Organization for Standardization
Provided by IHS under license with ISO
No reproduction or networking permitted without license from IHS
Not for Resale

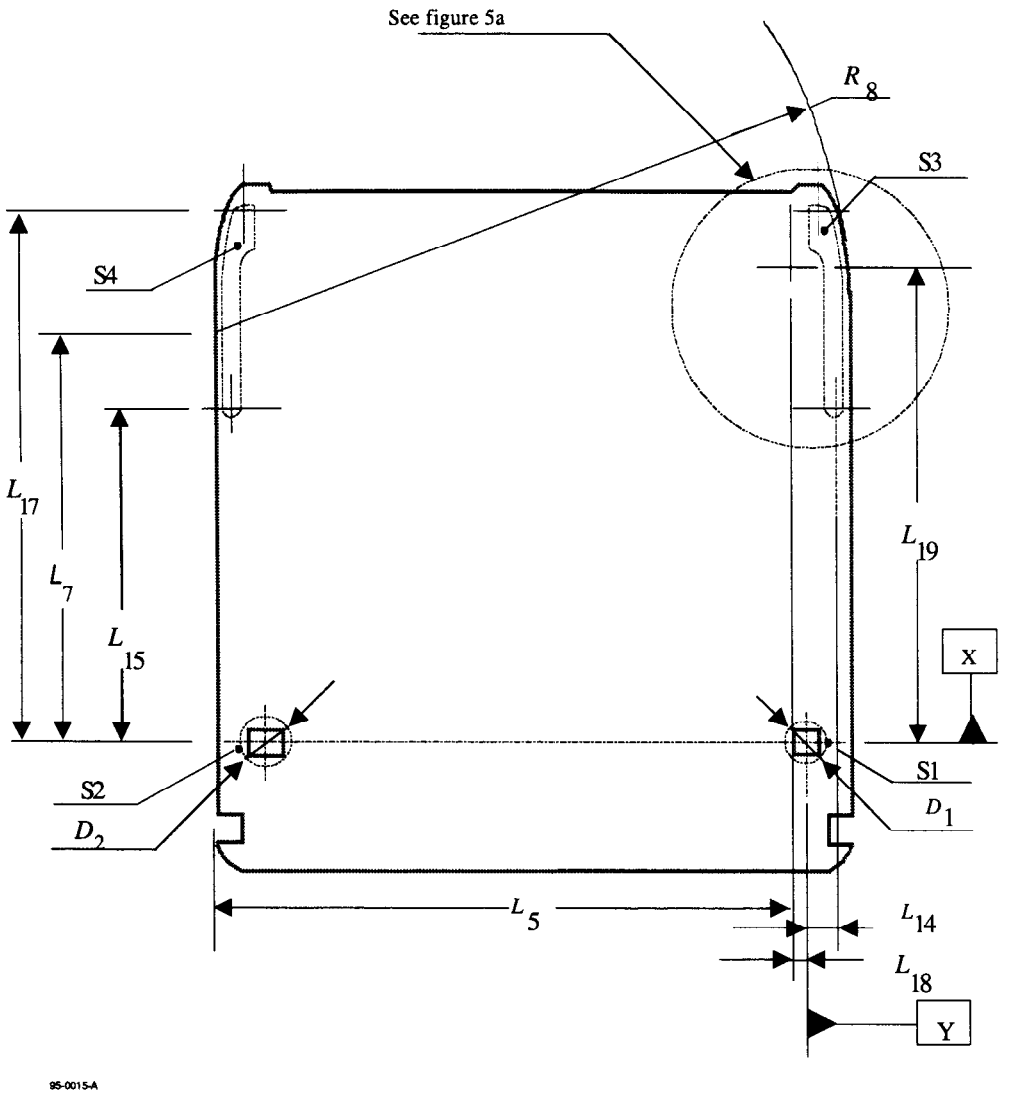

Figure 5 - Surfaces S1, S2, S3 and S4 of the reference plane P

Copyright International Organization for Standardization
Provided by IHS under license with ISO
No reproduction or networking permitted without license from IHS
Not for Resale

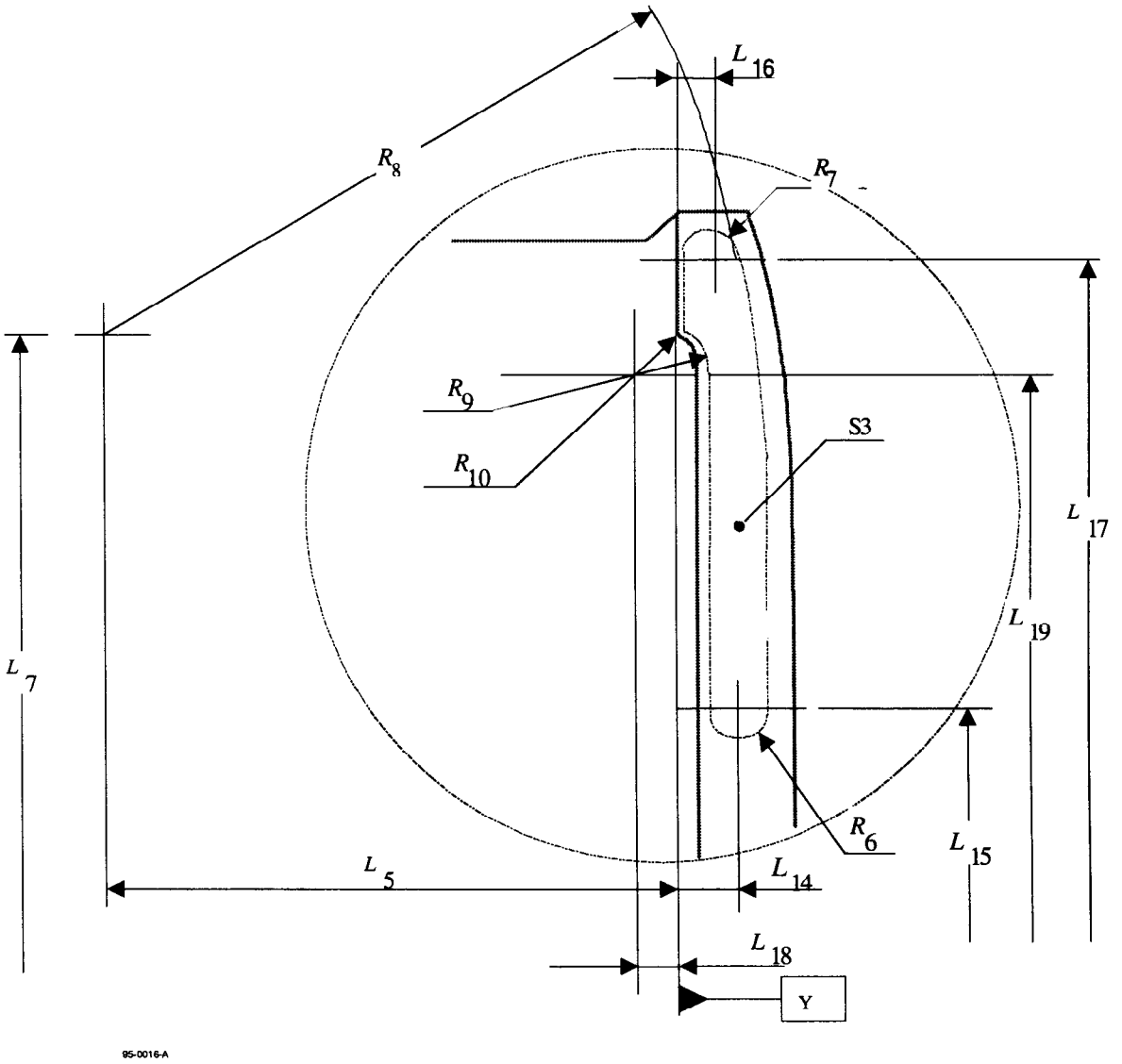

Figure 5a - Detail of surface S3

Copyright International Organization for Standardization
Provided by IHS under license with ISO
No reproduction or networking permitted without license from IHS
Not for Resale

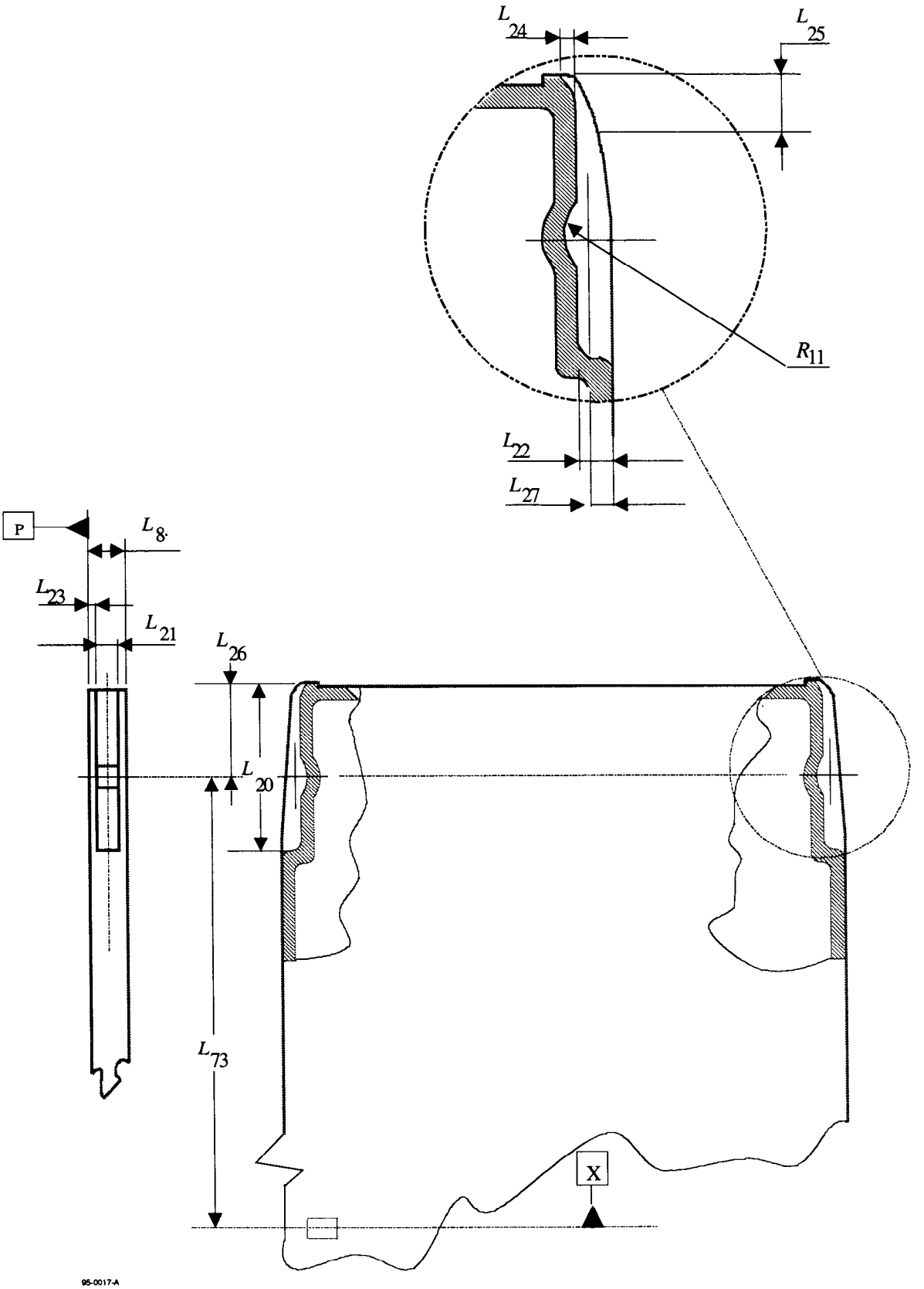

Figure 6 - Insertion slot and detent

Copyright International Organization for Standardization
Provided by IHS under license with ISO
No reproduction or networking permitted without license from IHS
Not for Resale

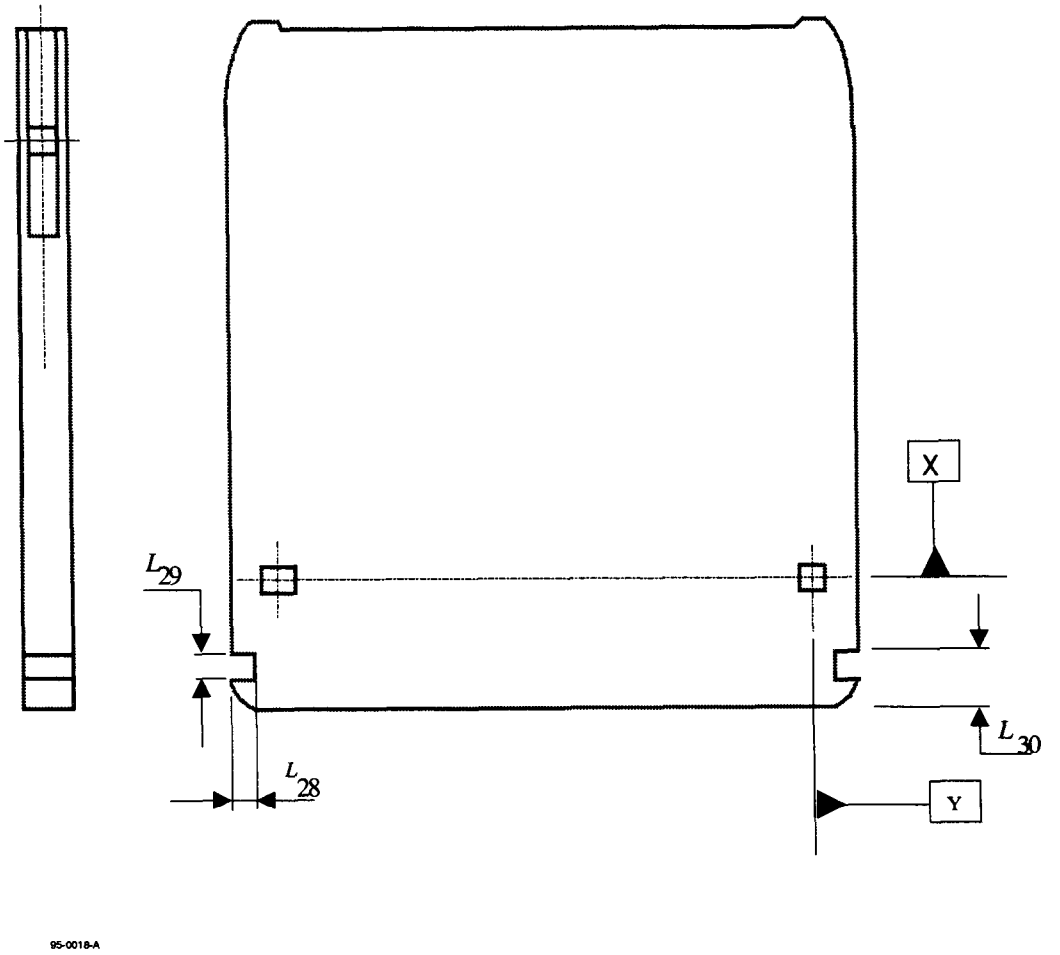

Figure 7 - Gripper slots

Copyright International Organization for Standardization
Provided by IHS under license with ISO
No reproduction or networking permitted without license from IHS
Not for Resale

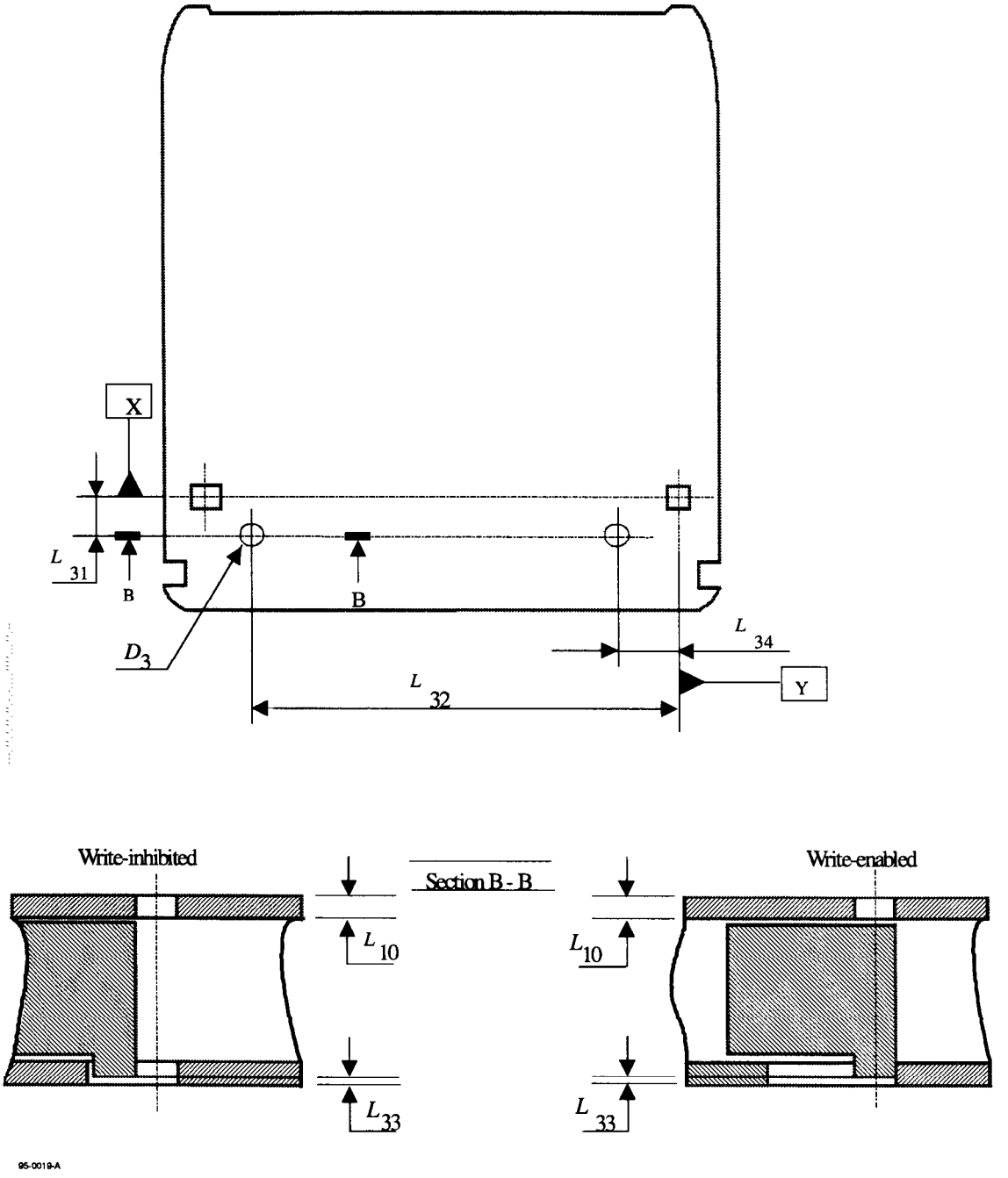

Figure 8 - Write-Inhibit holes

Copyright International Organization for Standardization
Provided by IHS under license with ISO
No reproduction or networking permitted without license from IHS
Not for Resale

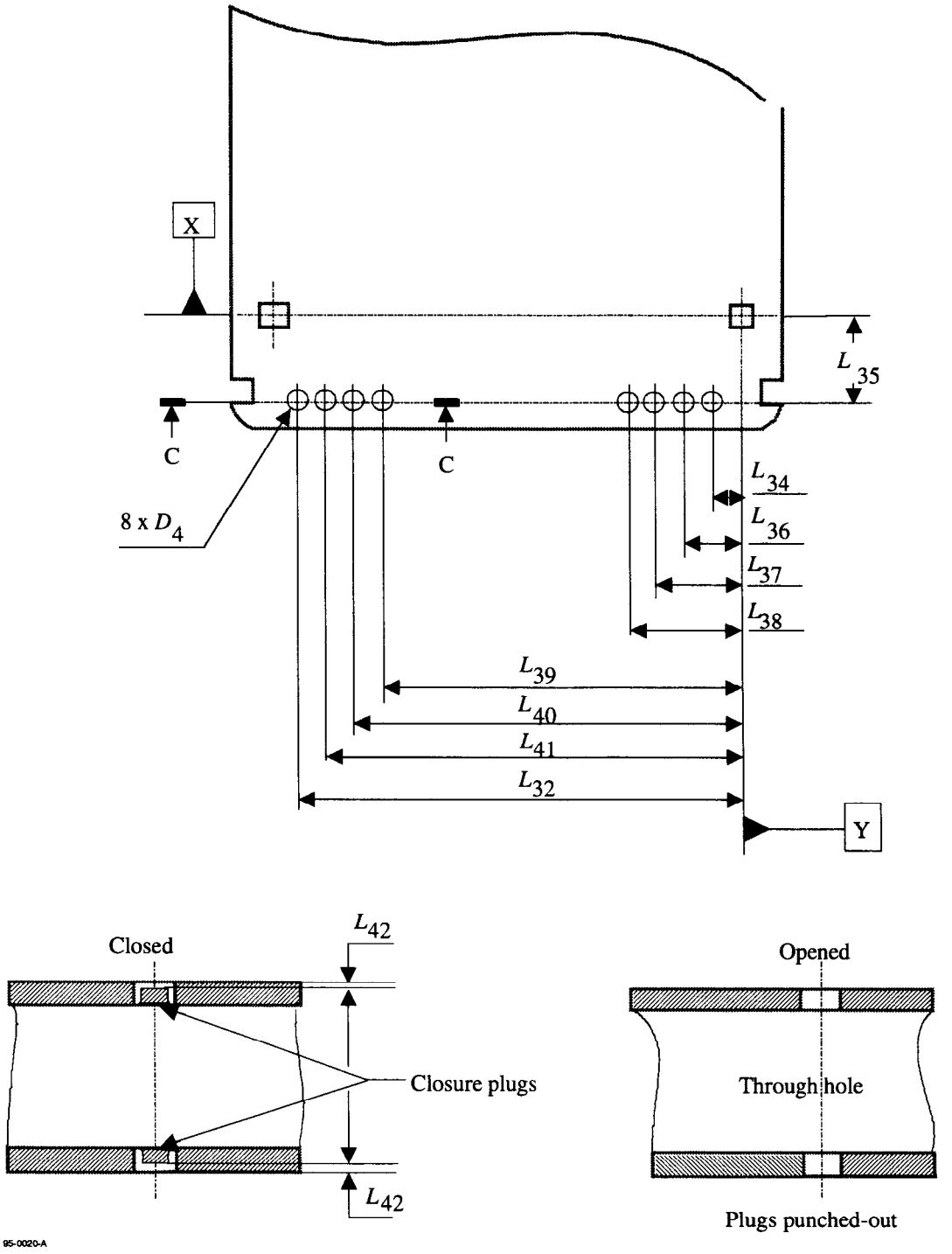

Figure 9 - Media ID sensor holes

Copyright International Organization for Standardization
Provided by IHS under license with ISO
No reproduction or networking permitted without license from IHS
Not for Resale

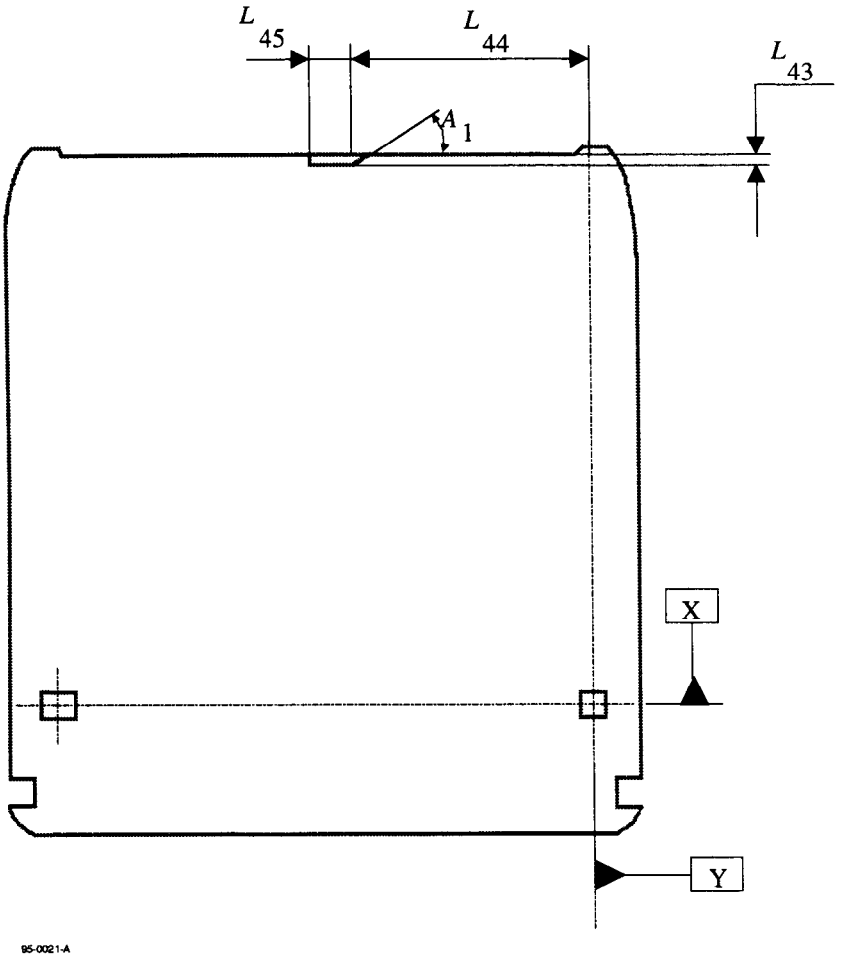

Figure 10 - Shutter sensor notch viewed from Side A

Copyright International Organization for Standardization
Provided by IHS under license with ISO
No reproduction or networking permitted without license from IHS
Not for Resale

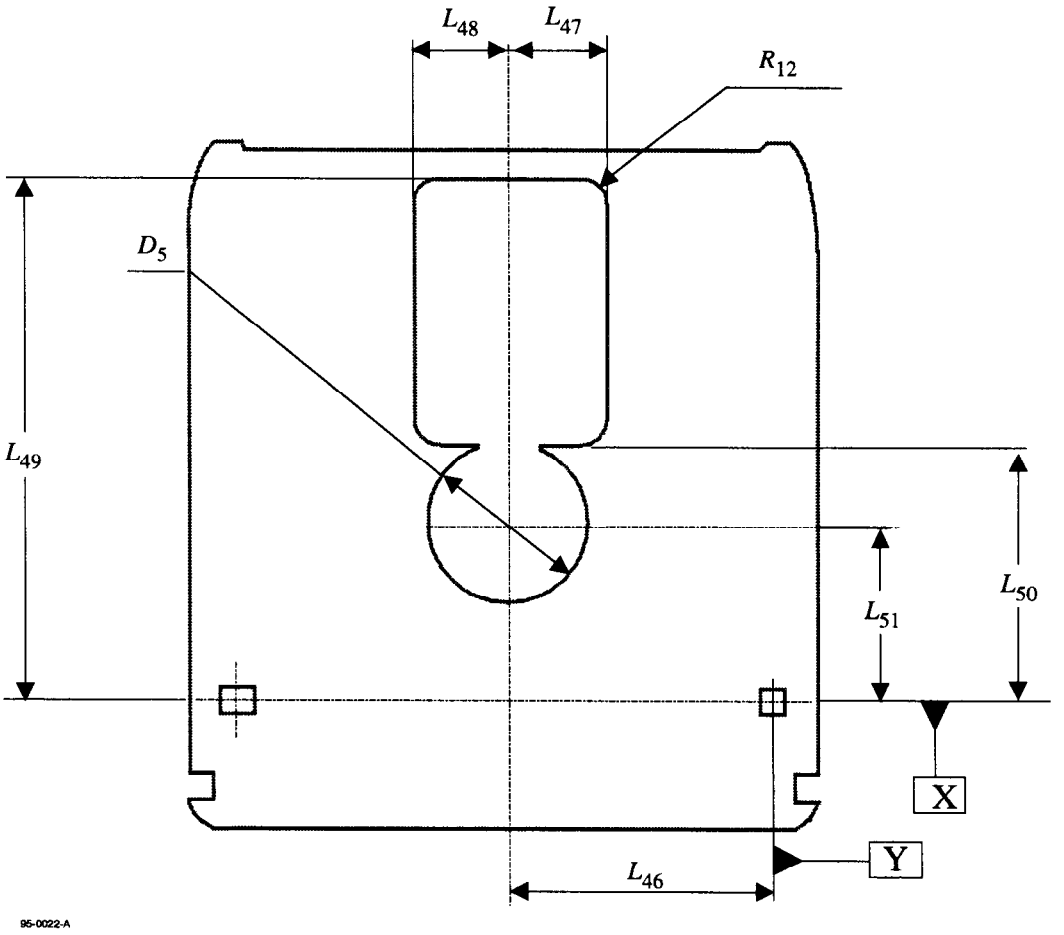

Figure 11 - Head and motor window

Copyright International Organization for Standardization
Provided by IHS under license with ISO
No reproduction or networking permitted without license from IHS
Not for Resale

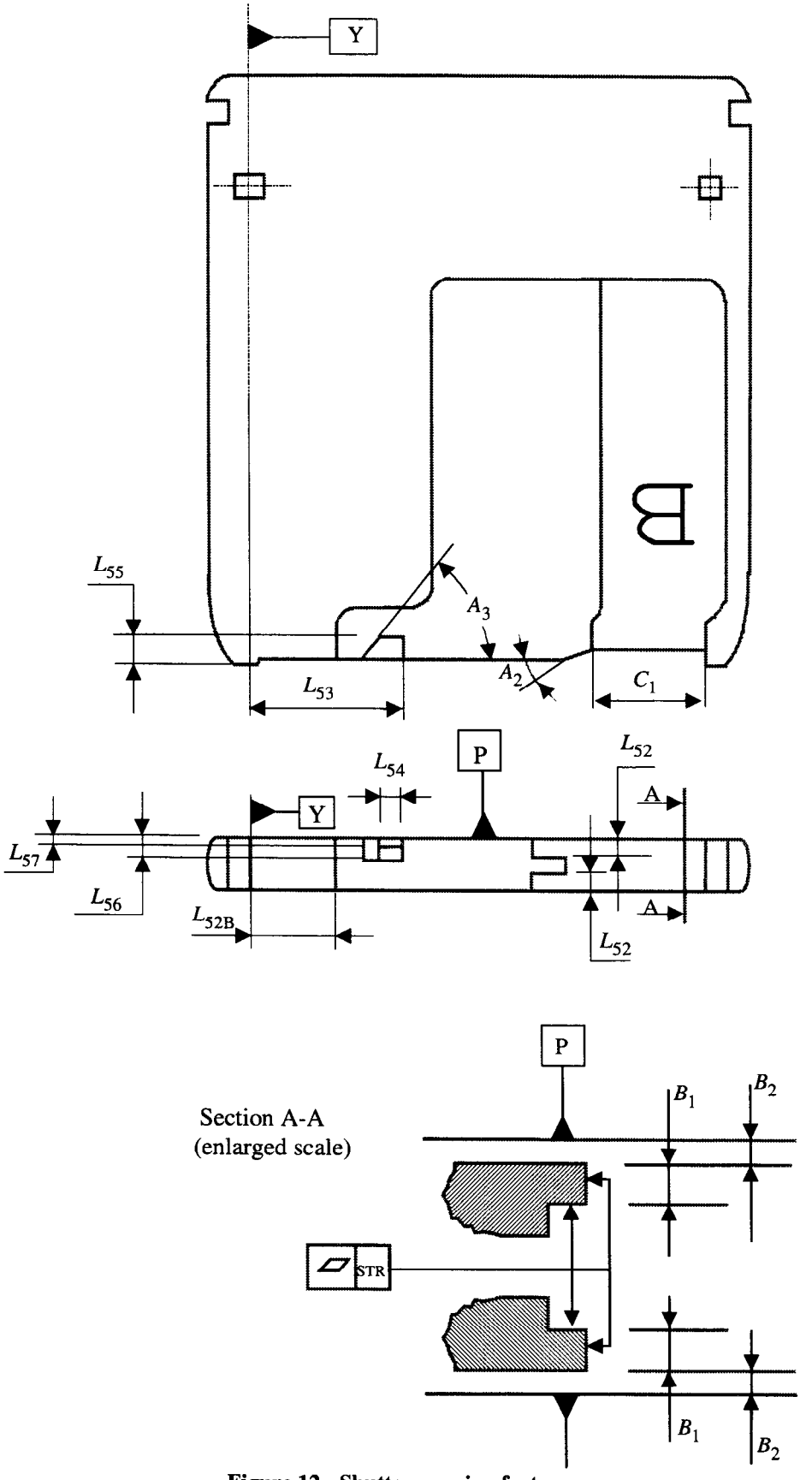

Figure 12 - Shutter opening feature

Copyright International Organization for Standardization
Provided by IHS under license with ISO
No reproduction or networking permitted without license from IHS
Not for Resale

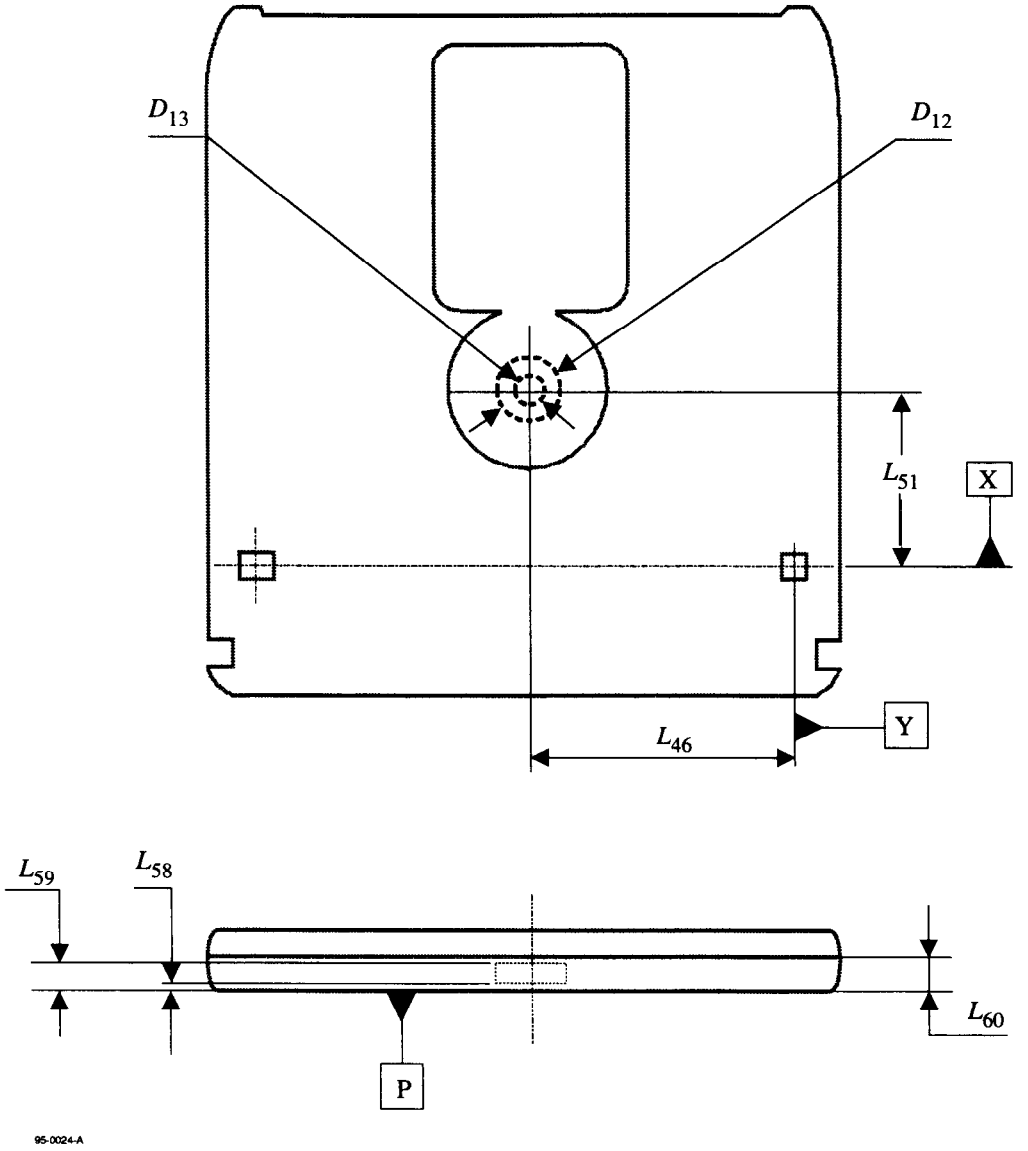

Figure 13 - Capture cylinder

Copyright International Organization for Standardization
Provided by IHS under license with ISO
No reproduction or networking permitted without license from IHS
Not for Resale

©ISO/IEC

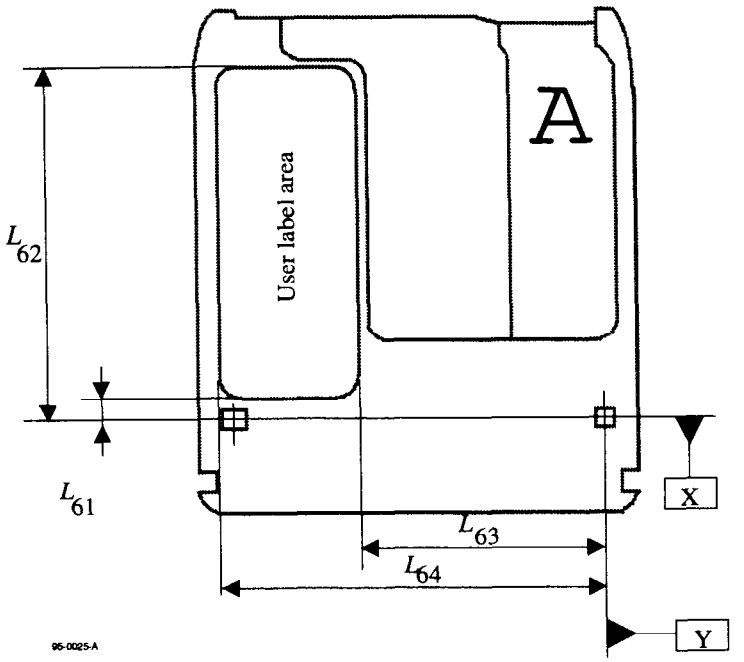

Figure 14a - User label area on Side A

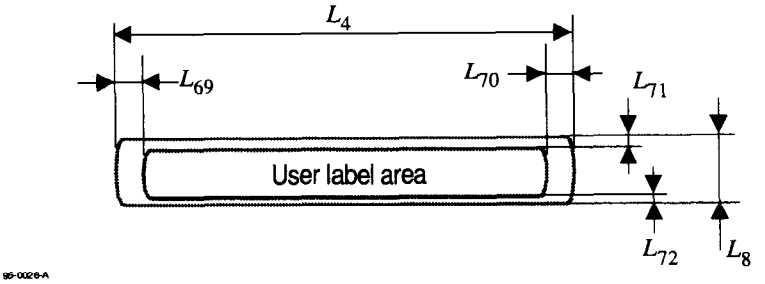

Figure 14b - User label area on bottom surface

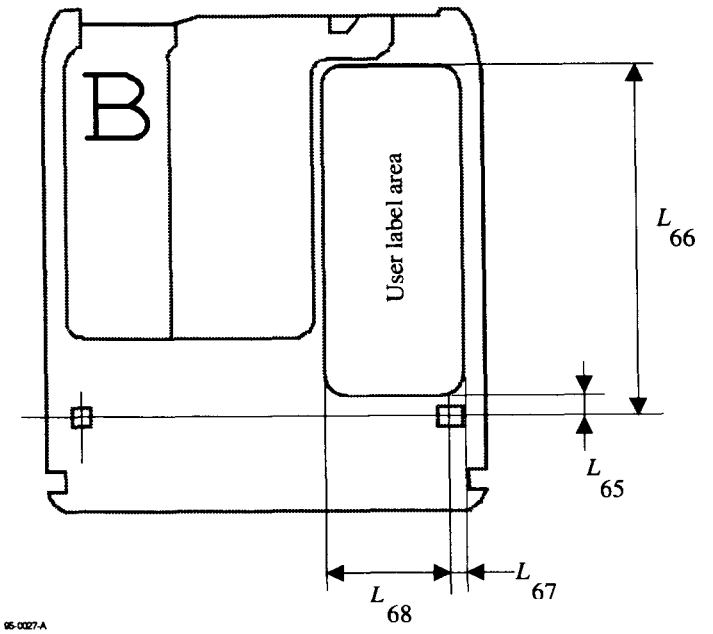

Figure 14c - User label on Side B

Figure 14 - User label area

Copyright International Organization for Standardization
Provided by IHS under license with ISO
No reproduction or networking permitted without license from IHS
Not for Resale

Section 3 - Format of information

13 Track geometry

13.1 Track shape

The Formatted Zone shall contain tracks intended for the continuous servo tracking method. (See table 4).

A track consists of a groove-land-groove combination, where each groove is shared with a neighboring track. A groove is a trench-like feature, the bottom of which is located nearer to the entrance surface than the land. The centre of the track, i.e. where the recording is made, is the centre of the land. The grooves shall be continuous. The shape of the groove is determined by the requirements in clause 21.

This International Standard distinguishes between physical and logical tracks. A physical track forms a 360o turn of a continuous spiral. A logical track is a portion of a physical track containing a defined number of consecutive sectors (see 14.2).

13.2 Direction of track spiral

The track shall spiral inward from the outer diameter to the inner diameter.

13.3 Track pitch

The track pitch is the distance between adjacent track centrelines, measured in a radial direction. It shall be 1,15 µm ± 0,05 µm except in the Control Track PEP Zone. The width of a group of bands corresponding to 26 086 physical tracks shall be 30,00 mm ± 0,10 mm.

13.4 Logical track number

Each logical track shall be identified by a logical track number (see 15.5). Unless otherwise stated all track numbers refer to logical tracks only.

Track 0 shall be located at radius 60,00 mm ± 0,10 mm.

The logical track numbers of logical tracks located at radii smaller than that of track 0 shall be increased by 1 for each track.

The logical track numbers of logical tracks located at radii larger than that of track 0 shall be negative, and decrease by 1 for each track. Their value is given in TWO's complement, thus track -1 is indicated by (3FFFF) in this International Standard.

13.5 Physical track number

In cases where track numbers refer to physical tracks this is clearly stated.

Physical track 0 shall begin with sector 0 of logical track 0.

The track numbers of physical tracks located at radii smaller than that of physical track 0 shall be increased by 1 for each physical track.

The track numbers of physical tracks located at radii larger than that of physical track 0 shall be negative, and decrease by 1 for each physical track.

14 Track format

14.1 Physical track layout

On each physical track there shall be 33 to 66 sectors. Each sector has 1 410 bytes. A byte is represented on the disk by 12 Channel bits. Hence, the length of one Channel bit is determined by the requirement that there are (33 to 66)x 1 410 x 12 = 558 360 to 1 116 720 Channel bits on a physical track. The sectors shall be equally spaced over a physical track in such a way that the distance between the first Channel bit of a sector and the first Channel bit of the next sector shall be 16,920 Channel bits ± 5 Channel bits. At the rotational speed of 50 Hz, the period T of a Channel bit equals

$$T = \frac{10^9}{50 \times (558\,360 \text{ to } 1\,116\,720)} \text{ ns} = 35{,}8 \text{ to } 17{,}9 \text{ ns}$$

14.2 Logical track layout

On each logical track there shall be 17 sectors.

Copyright International Organization for Standardization
Provided by IHS under license with ISO
No reproduction or networking permitted without license from IHS Not for Resale

14.3 Radial alignment

The Headers of the sectors in each band shall be radially aligned in such a way that the distance between the first Channel bit of sectors in adjacent physical tracks shall be less than 5 Channel bits.

The Headers of the first sector in all bands shall be radially aligned in such a way that the distance between the first Channel bit of the first sectors of each band shall be less than 120 Channel bits.

14.4 Sector number

The sectors of a logical track shall be numbered consecutively from 0 to 16.

15 Sector format

15.1 Sector layout

Sectors shall have the layout shown in figure 15. The number of user bytes per sector is specified by byte 1 of each of the Control Track Zones.

On the disk 8-bit bytes shall be represented by 12 Channel bits (see 16).

In figure 15 the numbers below the fields indicate the number of bytes in each field.

SM	VFO_1	AM	ID_1	VFO_2	AM	ID_2	PA
8	26	1	5	16	1	5	1
63 total							

Pre-formatted Header

Gap	Flag	Gap	ALPC
5	5	2	6
18 total			

ALPC and Gaps

Pre-formatted Header	ALPC, Gaps	VFO_3	Sync	Data field	Buffer
63	18	27	4	1 278 (User Data, DMP, CRC, Resync)	20
1410 total					

Figure 15 - Sector format for 1 024 user bytes

15.2 Sector Mark

The Sector Mark shall consist of an embossed pattern that does not occur in RLL (1,7) code (see 16) and is intended to enable the drive to identify the start of the sector without recourse to a phase-locked loop.

The Sector Mark shall have a length of 96 Channel bits and shall consist of pre-recorded, continuous, long marks of different Channel bit lengths followed by a lead-in to the VFO1 field. This pattern does not exist in data.

There are two kinds of Sector Marks to identify even-numbered and odd-numbered bands. The Sector Mark pattern shall be as shown in figure 16, where T corresponds to the time length of one Channel bit. The signal obtained from a mark is less than a signal obtained from no mark. The lead-in shall have the Channel bit pattern 000101 for odd-numbered bands and 000001 for even-numbered bands. The type of Sector Mark in the zones located at the outside of the User Zone shall be the same as Band 0 and the type of Sector Mark in the zones located at the inside of the User Zone shall be the same as Band 33.

Copyright International Organization for Standardization
Provided by IHS under license with ISO
No reproduction or networking permitted without license from IHS Not for Resale

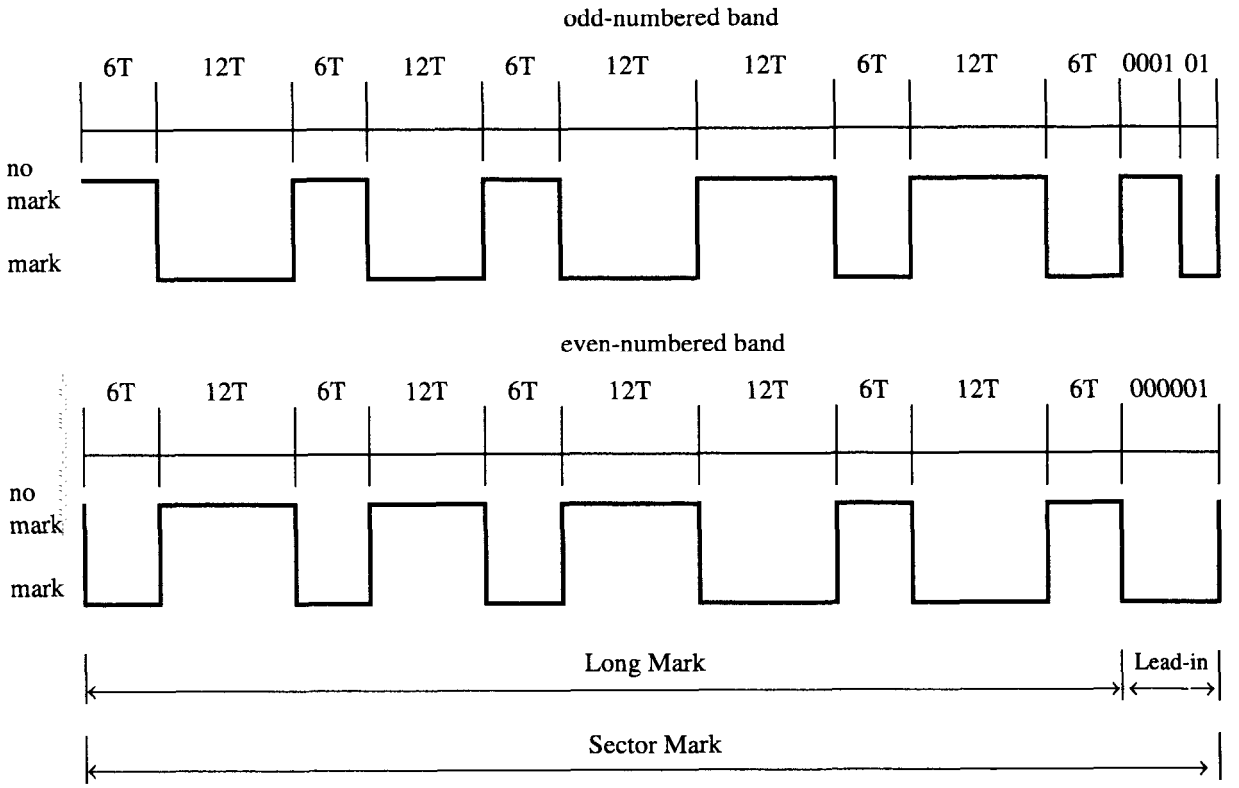

Figure 16 - Sector Mark pattern

15.3 VFO fields

There shall be three fields designated VFO_1, VFO_2 and VFO_3 (figure 17) to give the VFO of the phase-locked loop of the read Channel bit synchronization.

These fields shall be embossed, except for write once sectors, in which case the VFO_3 field shall be written by the drive when data is written to the sector.

The continuous Channel bit pattern for VFO fields shall be as shown in figure 17.

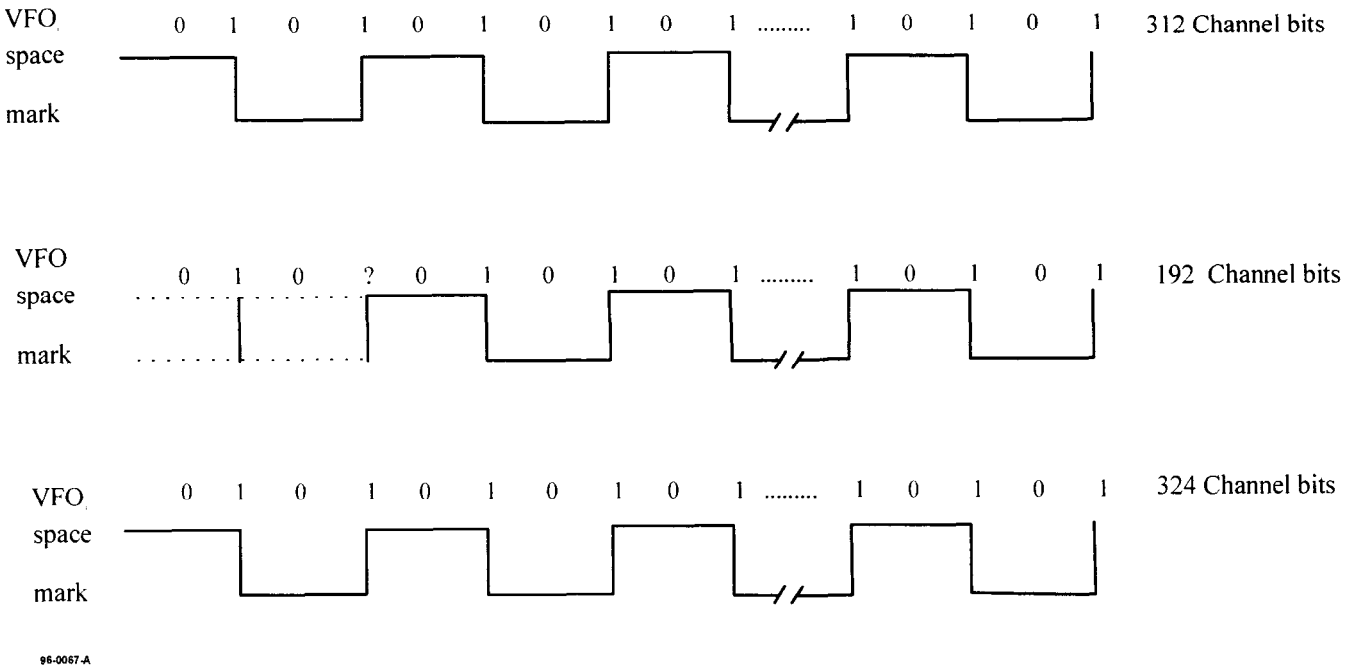

Figure 17 - VFO Field Patterns

Copyright International Organization for Standardization
Provided by IHS under license with ISO
No reproduction or networking permitted without license from IHS
Not for Resale

The starting bits of VFO_2 are 010. It shall be considered encoded from input bits 10.

The fourth bit (denoted by ?) shall be set to either a ONE or ZERO so as to produce the mark-space pattern as defined. The objective is to set the 9T space between the trailing edge of the last mark in the VFO and the front edge of the first mark of the following Address Mark. This value shall be such to produce the same pattern thereafter as the other VFO fields and to end this field in the trailing edge of an embossed mark.

The start of the VFO_3 field shall be not more than 6 Channel bits apart from the ideal positions given in this International Standard. This tolerance allows for timing inaccuracies of the optical drive controller and will be compensated for by the Gaps preceding the ALPC field and the Buffer field at the end of the sector.

15.4 Address Mark (AM)

The Address Mark shall consist of an embossed pattern that does not occur in RLL (1,7) code and which is a run-length violation for this code. The field is intended to give the drive byte synchronization for the following ID field. It shall have a length of 12 Channel bits with the following pattern:

0000 0000 10x0

where the setting of bit x shall be determined as follows:

if the first data bits of the following ID field are set to ZERO ZERO, x shall be set to ONE

if the first data bits of the following ID field are not set to ZERO ZERO, x shall be set to ZERO.

Since the last bit of the preceding VFO field is set to ONE, and a bit set to ONE appears in the AM after 8 other Channel bits, this 10-bit sequence constitutes the detection pattern.

15.5 ID fields

The two ID fields shall each contain the addresses of the sector, i.e. track number and sector number of the sector, and CRC bytes. Each field shall consist of five bytes with the following embossed contents:

1st byte

This byte shall specify the second least significant byte of the logical track number.

2nd byte

This byte shall specify the least significant byte of the logical track number.

3rd byte

bit 7	shall specify the ID number. when set to ZERO shall mean the ID_1 field, when set to ONE shall mean the ID_2 field,
bits 6 to 5	shall specify the two most significant bits of the logical track number
bits 4 to 0	shall specify the sector number in binary notation .

4th and 5th bytes

These two bytes shall specify a 16-bit CRC computed over the first three bytes of this field (see annex E).

The first two data bits of the ID field shall be encoded using table 2. When doing this, the last Channel bit from the AM shall be used as input to the encoder.

The first three Channel bits of the ID field shall be decoded using table 3. When doing this, the last two Channel bits from the AM shall be used as input to the decoder.

15.6 Postamble (PA)

This field shall be equal in length to 12 Channel bits following the ID_2 field.

Copyright International Organization for Standardization
Provided by IHS under license with ISO
No reproduction or networking permitted without license from IHS Not for Resale

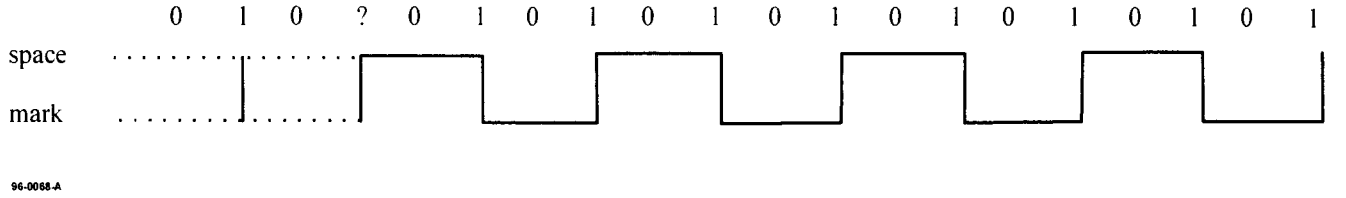

Figure 18 - Postamble pattern

The starting bits of the PA are 010. It shall be considered as encoded from input bits 10.

The value of the 4th bit (identified by ?) shall be such to end this field in the trailing edge of an embossed mark such that the following gap field is always recorded as a space. Due to the use of the RLL (1,7) encoding scheme (see 16), the framing of the last byte of the CRC in the ID_2 field is uncertain within a few bit times. The Postamble allows the last byte of the CRC to achieve closure and permits the ID field to end always in a predictable manner. This is necessary in order to locate the following field in a consistent manner.

15.7 Gap

There are two Gap fields in each sector.

The first Gap shall be equal in length to 60 Channel bits. It is the first field after the pre-formatted Header and gives the drive some time for processing after it has finished reading the header.

The second gap shall be equal in length to 24 Channel bits. This tolerance is needed to allow for the tolerance on the position of the following VFO_3 field. Moreover, it need not start exactly on a Channel bit position as extrapolated from the header.

The contents of the two Gap fields are not specified and shall be ignored on interchange

15.8 Flag

This field is intended to prevent inadvertent write operations over previously written data on Type WORM media. For Embossed sectors, this field is not specified and shall be ignored on interchange. For sectors in the User Zone, this field shall be unrecorded if the data field of the sector is unrecorded and if the data field of the sector is recorded, this field shall be recorded with a continuous 2T pattern of 60 Channel bits (010101010101...01).

15.9 Auto Laser Power Control (ALPC)

This field shall be equal in length to 72 Channel bits. It is intended for testing the laser power level.

The contents of this field are not specified and shall be ignored on interchange by this International Standard.

15.10 Sync

The sync field is intended to allow the drive to obtain byte synchronization for the following Data field. It shall have a length of 48 Channel bits and be recorded with the bit pattern

0100 0010 0100 0010 0010 0010 0100 0100 1000 0010 0100 10x0

where the setting of bit x shall be as follows:

if the first data bits of the following Data field are set to ZERO ZERO, x shall be set to ONE,

if the first data bits of the following Data field are not set to ZERO ZERO, x shall be set to ZERO.

15.11 Data field

The Data field is intended for recording user data. It shall consist of:

- 1 278 bytes comprising
  - 1 024 user bytes
  - 242 bytes for CRC, ECC and Resync
  - 12 bytes for Defect Management Pointer (DMP)

The disposition of these bytes in the Data field is specified in annex F.

The first two data bits of the Data field shall be encoded using table 2. When doing this, the last Channel bit from the Sync field shall be used as input to the encoder.

Copyright International Organization for Standardization
Provided by IHS under license with ISO
No reproduction or networking permitted without license from IHS
Not for Resale

The first three Channel bits of the Data field shall be decoded using table 3. When doing this, the last two Channel bits from the Sync field shall be used as input to the decoder.

15.11.1 User data bytes

These bytes are at the disposal of the user for recording information. There are 1 024 such bytes in each sector.

15.11.2 CRC and ECC bytes

The Cyclic Redundancy Check bytes and Error Correction Code bytes are used by the error detection and correction system to rectify erroneous data. The ECC is a Reed-Solomon code of degree 16.

The computation of the check bytes of the CRC and ECC shall be as specified in annex F.

15.11.3 Bytes for Defect Management Pointers (DMP)

There shall be 12 bytes for Defect Management Pointers (DMP). DMPs are used to specify the relationship between a defective sector and its replacement sector. See 19, Defect Management for WORM media for more details.

15.11.4 Resync bytes

The Resync bytes enable a drive to regain byte synchronization after a large defect in the data field.

Annex G specifies the Resync bytes and the criteria for selection of which of the two bytes is to be used.

The Resync fields shall be inserted among the rest of the bytes of the Data field as specified in annex F.

15.12 Buffer field

The Buffer field shall have a nominal length of 240 Channel bits (see 29.2.1), and is divided into two parts. The first part shall have a length of twelve Channel bits which shall be used for RLL (1,7) closure. The second part of this field shall not contain any data and is needed to allow for drive motor speed tolerances and other electrical and mechanical tolerances.

In the first part of this field, the RLL (1,7) closure shall end in a space to ensure that the second part will consist of spaces. Permitted RLL closures can be either the PA defined in 15.6 or any other valid RLL (1,7) closure.

The second part of this field is needed for the following reasons. Firstly, the tolerance on the header-to-header distance as specified in 14.1. Secondly, the tolerance in the start of the VFO_3 field as specified in 29.2.1. Thirdly, the actual length of the written data, as determined by the runout of the track and the speed variations of the disk during writing of the data.

16 Recording Code

The 8-bit bytes in the two ID fields and in the data field shall be converted to Channel bits on the disk according to table 2 and annex G. Channel bits in these fields shall be demodulated to information bits according to table 4 and annex G. All other fields in a sector have already been defined in terms of Channel bits. Write pulses shall produce marks in a manner such that the edge between a mark and a space or a space and a mark corresponds to a Channel bit that is a ONE.

The recording code used to record all data in the formatted areas of the disk shall be the run-length limited code known as RLL (1,7) as defined in tables 2 and 3.

Copyright International Organization for Standardization
Provided by IHS under license with ISO
No reproduction or networking permitted without license from IHS Not for Resale

Table 2 - Encoding of input bits to Channel bits

Preceding Channel bit	Current input bits	Following input bits	Channel bits RLL(1,7)
0 or 1	00	00 or 01	001
0	00	10 or 11	000
1	00	10 or 11	010
0	01	00 or 01	001
0	01	10 or 11	000
1	01	00	010
1	01	01, 10, or 11	000
0	10	00 or 01	101
0	10	10 or 11	010
0	11	00	010
0	11	01, 10, or 11	100

The coding shall start at the first bit of the first byte of the field to be converted. After a Resync field the RLL (1,7) coding shall start again with the last two input bits of the Resync bytes.

Table 3 - Decoding of Channel bits to information bits

Preceding Channel bits	Current Channel bits	Following Channel bits	Decoded information bits
10	000	00, 01 or 10	00
00 or 01	000	00, 01 or 10	01
00	001	00 or 01	01
01 or 10	001	00 or 01	00
00 or 10	010	00	11
00 or 10	010	01 or 10	10
01	010	00	01
01	010	01 or 10	00
00 or 10	100	00, 01 or 10	11
00 or 10	101	00 or 01	10

17 Formatted Zone

17.1 General description of the Formatted Zone

The Formatted Zone contains all information on the disk relevant for data interchange. The information comprises embossed tracking provisions, embossed headers, embossed data and, possibly, user-written data. In this clause the term 'data' is reserved for the content of the Data field of a sector, which, in general, is transferred to the host.

Clause 17 defines the layout of the information; the characteristics of signals obtained from this information are specified in section 4 and 6.

17.2 Division of the Formatted Zone

The Formatted Zone shall be divided into zones containing the logical tracks indicated in table 4.

The dimensions are given as reference only, and are nominal locations. The tolerance on the location of logical track 0 is specified in clause 13.4. The tolerances on other radii are determined by the tolerance on the track pitch as specified in 13.3.

Copyright International Organization for Standardization
Provided by IHS under license with ISO
No reproduction or networking permitted without license from IHS
Not for Resale

Table 4 - Layout of the Formatted Zone

Zone	Radius in mm	Logical Track Number
- Lead-in Zone	61,00 to 60,51	-3 366 to -1 717
- Outer Control Track SFP Zone	60,51 to 60,16	-1 716 to -529
- Outer Manufacturer Zone	60,16 to 60,00	-528 to -9
- Guard Band	60,00 to 60,00	-8 to -1
- User Zone	60,00 to 30,09	0 to 75 734
- Inner Manufacturer Zone	30,09 to 29,70	75 735 to 76 394
-- Guard Band	30,09 to 30,08	75 735 to 75 742
-- Manufacturer Test Zone	30,08 to 29,70	75 743 to 76 386
-- Guard Band	29,70 to 29,70	76 386 to 76 394
- Inner Control Track SFP Zone	29,70 to 29,52	76 395 to 76 691
- Transition Zone for SFP	29,52 to 29,50	76 692 to 76 724
- Control Track PEP Zone	29,50 to 29,00	N/A
- Reflective Zone	29,00 to 27,00	N/A

The Formatted Zone shall extend from radius 61,00 mm to radius 27,00 mm. From radius 61,00 mm to radius 29,52 mm, it shall be provided with tracks containing servo and address information.

The location of the zones defined in table 4 are also shown in figure 19.

Copyright International Organization for Standardization
Provided by IHS under license with ISO
No reproduction or networking permitted without license from IHS Not for Resale

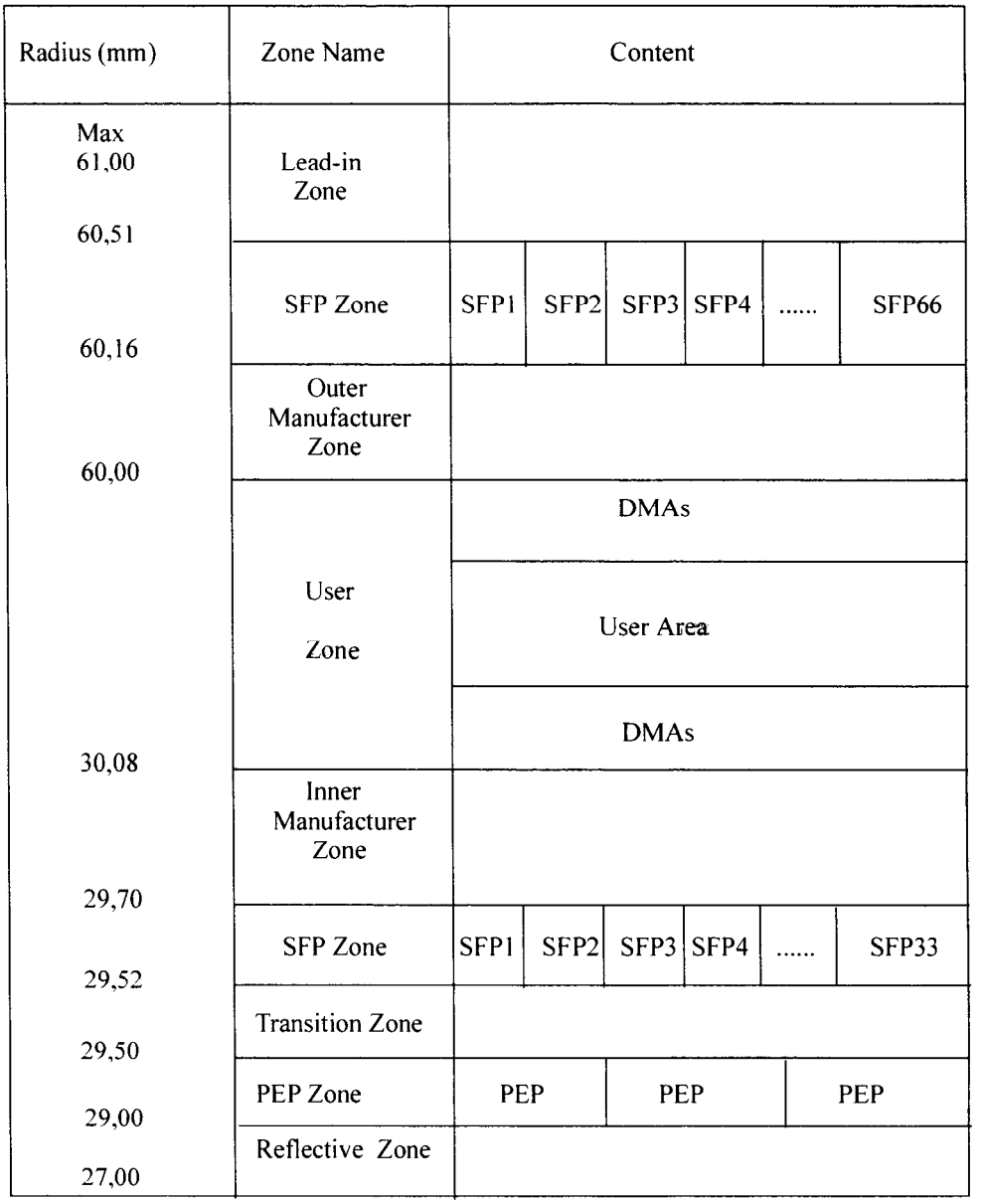

Figure 19 - Location of the zones of the Formatted Zone

17.2.1 Lead-in Zone

The Lead-In Zone shall be used for positioning purposes only.

17.2.2 Manufacturer Zones

There is an Inner and an Outer Manufacturer Zone. They are provided to allow the media manufacturer to perform tests on the disk, including write operations, in an area located away from recorded information.

17.2.2.1 Outer Manufacturer Zone

The Outer Manufacturer Zone shall comprise 520 logical tracks.

Logical tracks - 1 to - 8 are a buffer and shall not be used. Other logical tracks may have embossed marks in the Data field (15.11) that need not comply with the requirements of clause 15.11 or clause 16. The information in this zone is not specified by this International Standard and shall be ignored in interchange.

All physical tracks in the Outer Manufacturer Zone shall contain 66 sectors.

Copyright International Organization for Standardization
Provided by IHS under license with ISO
No reproduction or networking permitted without license from IHS
Not for Resale

17.2.2.2 Inner Manufacturer Zone

The Inner Manufacturer Zone is divided into three parts: Two Guard bands and in between the actual Manufacturer Test zone.

The purpose of the Guard bands is to protect and buffer the areas that contain information from accidental damage when the area between the Guard bands is used for testing or calibration of the optical system.

The manufacturer test zone may have embossed marks in the data field (15.11) that need not comply with the requirements of clause 15.11 or clause 16. The information in this zone is not specified by this International Standard and shall be ignored in interchange.

All physical tracks of the Inner Manufacturer zone shall contain 33 sectors.

17.2.3 User Zone

The Data fields in the User Zone can be user-written or contain embossed data, in the format of clause 15, depending upon the type of the disk.

The layout of the User Zone and its sub-divisions is specified in clause 18.

17.2.4 Reflective Zone

This International Standard does not specify the format of the Reflective Zone, except that it shall have the same recording layer as the remainder of the Formatted Zone.

17.2.5 Control Track Zones

The three zones on each side of the disk

- Control track PEP Zone
- Inner Control Track SFP Zone
- Outer Control Track SFP Zone

shall be used for recording control track information.

The control track information shall be recorded in two different formats, the first format in the Control Track PEP Zone, and the second format in the Inner and Outer Control Track SFP Zones.

The Control Track PEP Zone shall be recorded using low frequency phase-encoded modulation.

The Inner and Outer Control Track SFP Zones shall each consist of tracks recorded by the same modulation method and format as is used in the User Zone (see 16 and 18).

The Transition Zone for SFP is an area in which the format changes from the Control Track PEP Zone which contains no servo information to a zone including servo information.

All physical tracks in the Inner Control Track SFP Zone shall have 33 sectors.

All physical tracks in the Outer Control Track SFP Zone shall have 66 sectors.

17.3 Control Track PEP Zone

The information contained in the Control Track PEP Zone gives a general characterization of the disk. It specifies the type of disk, the ECC, the tracking method, etc.

This zone shall not contain any servo information. All information shall be pre-recorded in phase-encoded modulation. The marks in all tracks of this zone shall be radially aligned, so as to allow information recovery from this zone without radial tracking being established by the drive.

The read power shall not exceed 0,65 mW.

17.3.1 Recording in the PEP Zone

In the PEP Zone there shall be 561 to 567 PEP-Channel bit cells per physical track. A PEP-Channel bit cell shall be 656 PEP-Channel bits ± 1 PEP-Channel bits long. A PEP-Channel bit is recorded by writing marks in either the first or the second half of the cell.

A mark shall be nominally two PEP-Channel bits long and shall be separated from adjacent marks by a space of nominally two PEP-Channel bits.

A ZERO shall be represented by a change from marks to no marks at the centre of the cell and a ONE by a change from no marks to marks at this centre.

Copyright International Organization for Standardization
Provided by IHS under license with ISO
No reproduction or networking permitted without license from IHS Not for Resale

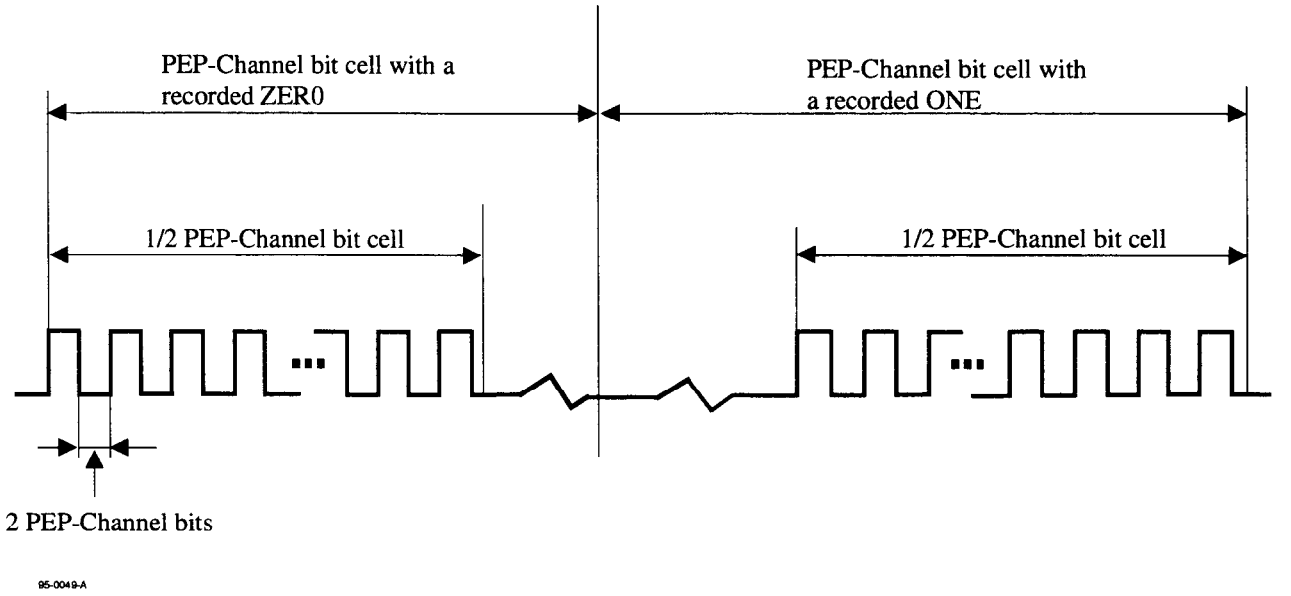

Figure 20 - Example of phase-encoded modulation in the PEP Zone

Requirements for the density of the tracks and the shape of marks in the Control Track PEP Zone are specified in clause 24.

17.3.2 Format of the tracks of the PEP Zone

Each physical track in the PEP Zone shall have three sectors. The numbers below the fields in figure 21 indicate the number of PEP bits in each field.

| <----------One revolution period (3 sectors)----------> |

Sector	Gap	Sector	Gap	Sector	Gap
177	10 to 12	177	10 to 12	177	10 to 12

Figure 21 - Track format in the PEP Zone

The gaps between sectors shall be unrecorded areas having a length corresponding to 10 to 12 PEP bit cells.

17.3.2.1 Format of a sector

Each sector of 177 PEP bits shall have the following layout.

|<---------- One sector (177 bits) ---------->|

Preamble	Sync	Sector Number	Data	CRC
16	1	8	144	8

Figure 22 - Sector format in the PEP Zone

17.3.2.1.1 Preamble field

This field shall consist of 16 ZERO bits.

17.3.2.1.2 Sync field

This field shall consist of 1 ONE bit.

17.3.2.1.3 Sector Number field

This field shall consist of eight bits specifying in binary notation the Sector Number from 0 to 2.

Copyright International Organization for Standardization
Provided by IHS under license with ISO
No reproduction or networking permitted without license from IHS
Not for Resale

17.3.2.1.4 Data field

This field shall comprise 18 8-bit bytes numbered 0 to 17. These bytes shall specify the following.

Byte 0

bit 7 shall be set to ZERO indicating the continuous servo tracking method,

bits 6 to 4 shall be set to 110 indicating a logical ZCAV.

Other settings of these bits are prohibited by this International Standard (see annex P).

bit 3 shall be set to ZERO

bits 2 to 0 shall be set to 010 indicating RLL (1,7) mark edge modulation,

Other settings of this byte are prohibited by this International Standard.

Byte 1

bit 7 shall be set to ZERO

bits 6 to 4 specify the error correction code and shall be set to 000 to indicate R-S LDC degree 16, and 10 interleaves (1 024-byte sectors)

Other settings of these bits are prohibited by this International Standard.

bit 3 shall be set to ZERO

bits 2 to 0 these bits shall specify in binary notation the power n of 2 in the following formula which expresses the number of user bytes per sector

256×2^n

For this International Standard, the value of n shall be 2 indicating 1 024 byte sectors.

Byte 2

The byte shall be set to:

0001 0001 thus specifying the number 17, which is the number of sectors in each logical track.

Byte 3

This byte shall give the manufacturer's specification for the reflectance R of the disk when measured at a nominal wavelength of 685 nm. It is specified as a number n such that

$$n = 100\,R.$$

Byte 4

This byte shall specify that the recording is on-land and it shall indicate the signal amplitude of the pre-recorded marks.

bit 7 shall be set to ZERO to specify on-land recording.

The absolute value of the signal amplitude is given as a number n between -20 and -50, such that

$$n = -50\,(I_{sm} / I_{0L})$$

where I_{sm} is the signal from the Sector Mark in Channel 1 and I_{0L} is the maximum signal from an unrecorded, grooved area in the User Zone.

bits 6 to 0 shall express this number n. Bit 6 shall be set to ONE to indicate that this number is negative and expressed by bits 5 to 0 in TWO's complement. Recording is high-to-low.

Byte 5

This byte shall specify the capacity of the ODC in Gbytes (with one significant digit to the right of the decimal mark) times 10. For this International Standard, this byte shall be set to (1A) representing a capacity of 2,6 Gbytes.

Copyright International Organization for Standardization
Provided by IHS under license with ISO
No reproduction or networking permitted without license from IHS Not for Resale

Byte 6

This byte shall specify in binary notation a number *n* representing 20 times the maximum read power expressed in milliwatts which is permitted for reading the SFP Zone at a rotational frequency of 50 Hz and a wavelength of 685 nm. This number *n* shall be between 8 and 40.

Byte 7

The byte shall specify the disk type:

0001 0000 indicates a Write Once Read Many ODC using irreversible recording.

Other settings of this byte are prohibited by this International Standard (see also annex P).

Byte 8

This byte shall specify the next most significant byte of the logical track number in which the Outer Control Track SFP Zone starts. It shall be set to (F9) representing the next MSB of track number -1 716

Byte 9

This byte shall specify the least significant byte of the logical track number in which the Outer Control Track SFP Zone starts. It shall be set to (4C) representing the LSB of track number -1716.

Byte 10

This byte shall specify the next most significant byte of the logical track number in which the Inner Control Track SFP Zone starts. It shall be set to (2A) representing the next MSB of Logical Track Number 76 395.

Byte 11

This byte shall specify the least significant byte of the logical track number in which the Inner Control Track SFP Zone starts. It shall be set to (6B) representing the LSB of Logical Track Number 76 395.

Byte 12

This byte shall specify the track pitch in micrometres times 100. It shall be set to (73) representing a track pitch of 1,15 µm.

Byte 13

This byte shall specify that the recording is on-land and it shall indicate the signal amplitude and polarity of the user-written marks.

bit 7 shall be set to ZERO to specify on-land recording.

The value of the signal amplitude is given as a number *n* between +15 and +50 , or between -15 and -50 such that

$$n = 50\ (I_L\ /\ I_{OL})$$

where I_L is the low frequency pattern signal from the User-written data (see 27.1). I_L is a positive number when recording is low-to-high. Conversely, it is a negative number when recording is high-to-low. I_{OL} is the maximum signal from an unrecorded, grooved area in the User Zone. Both I_L and I_{OL} are measured with Channel 1.

bits 6 to 0 shall express this number *n*. If bit 6 is set to ZERO this number is positive. If bit 6 is set to ONE this number is negative and expressed in TWO's complement.

If *n* is positive it indicates low-to-high recording, if *n* is negative it indicates high-to-low recording.

Byte 14

This byte shall specify the most significant byte of the Logical Track Number in which the Outer SFP Zone starts. It shall be set to (FF) representing the MSB of Logical Track Number -1 716 .

Byte 15

This byte shall specify the most significant byte of the logical track number in which the Inner Control Track SFP Zone starts. It shall be set to (01) representing the MSB of Logical Track Number 76 395.

Bytes 16 and 17

The contents of these bytes are not specified by this International Standard and shall be ignored in interchange.

Copyright International Organization for Standardization
Provided by IHS under license with ISO
No reproduction or networking permitted without license from IHS Not for Resale

17.3.2.1.5 CRC

The eight bits of the CRC shall be computed over the Sector Number field and the Data field of the PEP sector.

The generator polynomial shall be

$$G(x) = x^8 + x^4 + x^3 + x^2 + 1$$

The residual polynomial $R(x)$ shall be

$$R(x) = \left(\sum_{i=144}^{i=151} \overline{a}_i x^i + \sum_{i=0}^{i=143} a_i x^i \right) x^8 \mod G(x)$$

where a_i denotes a bit of the input data and $\overline{a_i}$ an inverted bit. The highest order bit of the sector number field is a_{151}.

The eight bits c_k of the CRC are defined by

$$R(x) = \sum_{k=0}^{k=7} c_k x^k$$

where c_7 is recorded as the highest order bit of the CRC byte of the PEP sector.

Copyright International Organization for Standardization
Provided by IHS under license with ISO
No reproduction or networking permitted without license from IHS
Not for Resale

17.3.2.2 Summary of the format of the Data field of a sector

Table 5 - Format of the Data field of a sector of the PEP Zone

Byte	Bit number							
	7	6	5	4	3	2	1	0
0	0	Logical ZCAV=110			0	RLL (1,7)=010		
1	0	ECC			0	010 for 1 024-byte sectors		
2	0001 0001 for 17 sectors/logical track							
3	Reflectance at 685 nm							
4	0	Amplitude and polarity of pre-formatted data						
5	ODC Capacity = (1A)							
6	Maximum read power for the SFP Zone at 50 Hz and 685 nm							
7	Disk Type WORM using irreversible recording effects = (10)							
8	Start track of Outer SFP Zone, second MSB of Logical Track Number = (F9)							
9	Start track of Outer SFP Zone, LSB of Logical Track Number = (4C)							
10	Start Track of Inner SFP Zone, second MSB of Logical Track Number = (2A)							
11	Start track of Inner SFP Zone, LSB of Logical Track Number = (6B)							
12	Track pitch = (73)							
13	0	0	Amplitude and polarity of user data					
14	Start track of Outer SFP Zone, MSB of Logical Track Number = (FF)							
15	Start track of Inner SFP Zone, MSB of Logical Track Number = (01)							
16	Not specified by this International Standard							
17	Not specified by this International Standard							

17.4 Control Track SFP Zones

The two Control Track SFP Zones shall be pre-recorded in the sector format specified in clause 15. The pre-recorded data marks shall satisfy the requirements for the signals specified in clause 23.

Each sector of the SFP Zones (see 17.2.5) shall include 512 bytes of information numbered 0 to 511:

- a duplicate of the PEP information (18 bytes),
- media information (362 bytes),
- system information (132 bytes),

These first 512 bytes shall be followed by 512 (FF)-bytes.

17.4.1 Duplicate of the PEP information

Bytes 0 to 17 shall be identical with the 18 bytes of the Data field of a sector of the PEP Zone (see 17.3.2.1.4).

17.4.2 Media information

Bytes 18 to 33 shall specify read and write parameters for the laser wavelength L_1 = 685 nm, the baseline reflectance R_1, and the rotational frequency N_1 = 50 Hz. For the value of N one set of write powers for the 4T mark is given: it contains three values for the inner, middle and outer radius.

Copyright International Organization for Standardization
Provided by IHS under license with ISO
No reproduction or networking permitted without license from IHS Not for Resale

Bytes 18 to 33 shall specify values such that the requirements of 11.5 and of clauses 25, 26, 27 and 28 are met (see table 6).

Byte 18

This byte shall specify the wavelength L_1, in nanometres, as a number n between 0 and 255 such that

$$n = 1/5\ L_1$$

This byte shall be set to $n = 137$ for ODCs according to this International Standard.

Byte 19

This byte shall specify the reflectance R_1 (see 11.5.5) at wavelength L_1 as a number n such that

$$n = 100\ R_1$$

Byte 20

This byte shall specify the rotational frequency N_1, in hertz, as a number n such that

$$n = N_1$$

This byte shall be set to $n = 50$ for ODCs according to this International Standard.

Byte 21

This byte shall specify the maximum read power P_1 in milliwatts, for the User Zone as a number n between 8 and 40 such that

$$n = 20\ P_1$$

Bytes 22 to 24

These bytes are not used and shall be set to (FF).

The following bytes 25 to 27 shall specify the write power P_W for 4T marks in milliwatts indicated by the manufacturer of the disk (see 25.3.2). P_W is expressed as a number n between 0 and 255 such that

$$n = 5P_W$$

Byte 25

This byte shall specify P_W for

$$r = 30 \text{ mm}$$

Byte 26

This byte shall specify P_W for

$$r = 45 \text{ mm}$$

Byte 27

This byte shall specify P_W for

$$r = 60 \text{ mm}$$

The following bytes 28 to 30 shall specify the media thermal interaction E(th) in percent of the time period T of one Channel bit indicated by the manufacturer of the disk (see 27.5). E(th) shall be expressed as a number n between 0 and 255 such that

$$n = 2 \text{ E(th)}$$

Byte 28

This byte shall specify E(th) for

$$r = 30 \text{ mm}$$

Byte 29

This byte shall be set to (FF).

Byte 30

This byte shall be set to (FF).

Copyright International Organization for Standardization
Provided by IHS under license with ISO
No reproduction or networking permitted without license from IHS Not for Resale

The following bytes 31 to 33 shall specify the write power P_W for 2T marks in milliwatts indicated by the manufacturer (see 25.3.2). P_W is expressed by a number n between 0 and 255 such that

$n = 5$ Pw

Byte 31

This byte shall specify P_W for

$r = 30$ mm

Byte 32

This byte shall specify P_W for

$r = 45$ mm

Byte 33

This byte shall specify P_W for

$r = 60$ mm

Bytes 34 to 43

These bytes are not used and shall be set to (FF).

Byte 44

This byte shall be set to (00)

Bytes 45 to 379 - Reserved

These bytes are not used and shall be set to (FF).

17.4.3 System Information

Bytes 380 to 386 are mandatory. Bytes 384 to 386 shall specify in binary notation the Logical Track Number of the last logical track of the User Zone. The total number of logical tracks in this zone equals the Logical Track Number of the last logical track of the User Zone increased by 1. The Logical Track Number of the last logical track of the User Zone shall be 75 734.

Bytes 380 to 383: Reserved

These bytes shall be set to (FF).

Byte 384

This byte shall be set to (01) indicating the most significant byte of the number of the last logical track of the User Zone.

Byte 385

This byte shall be set to (27) indicating the next most significant byte of the number of the last logical track of the User Zone.

Bytes 386

This byte shall be set to (D6) indicating the least significant byte of the number of the last logical track of the User Zone.

Bytes 387 to 399 : Reserved

These bytes shall be set to (FF).

Bytes 400 to 479 : Reserved.

For Type WORM these bytes shall be set to (FF).

Bytes 480 to 511: Unspecified data

The contents of these bytes are not specified in this International Standard. They may contain an identification of the manufacturer. They shall be ignored in interchange.

Bytes 512 to 1023: Reserved.

These bytes shall be set to (FF).

Copyright International Organization for Standardization
Provided by IHS under license with ISO
No reproduction or networking permitted without license from IHS Not for Resale

Table 6 - Summary of media information

Category	Mandatory	Optional or (FF)	Mandatory (FF)
Media Parameter	0 - 15		
Unspecified		16-17	
L_1 & R_1	18-19		
N_1 Values	20-21, 25-28, 31-33, 44		22-24, 29-30, 34-43, 45-47
Reserved			48 -383
Last track number	384-386		
Reserved			387-399
Reserved			400-479 for Type WORM
Unspecified		480-511	
Reserved			512-1 023

18 Layout of the User Zone

18.1 General description of the User Zone

The User Zone consists of 1 024-byte sectors and has a data capacity per side of 1,3 Gbytes. Spare sectors and the non-usable sectors are included in this figure..

The location and size of the User Zone are specified in clause 17.

18.2 Divisions of the User Zone

The User Zone shall include four Defect Management Areas (DMA), two at the beginning of the zone and two at the end. The area between the two sets of DMAs is called the User Area.

The entire User Zone shall also be divided into bands as a result of the ZCAV organization of the disk.

Each of these bands shall contain the same number of physical tracks. Each such band is divided into logical tracks which have the same number of sectors. The number of logical tracks per band decreases from band to band moving from the outer radius to the inner radius.

The hierarchy is thus:

17 sectors	= 1 logical track
1 485 to 2 970 logical tracks	= 1 band
765 physical tracks	= 1 band
34 bands	= the User Zone

The User Zone shall be divided into 34 bands numbered 0 to 33 as shown in table 7. Each band is made up of a Data Area and a Primary Reserved Area (PRA). A Secondary Reserved Area (SRA) is also contained in Band 33. Reserved areas are used for both replacements for defective sectors and for write power calibration.

18.2.1 Reserved Area Use

The spare sectors that are assigned as replacements for defective primary sectors are allocated beginning at the lowest track and sector number of the PRA with subsequent assignments allocated to the next higher available track and sector number. The reserved sectors used as calibration sectors are allocated beginning at the highest track and sector number of the PRA with subsequent calibrations allocated to the next lower available sector track and sector number. The available sectors in the PRA of a group are exhausted when there are no free sectors remaining between the two allocation processes. Further allocation of

Copyright International Organization for Standardization
Provided by IHS under license with ISO
No reproduction or networking permitted without license from IHS Not for Resale

replacement or calibration sectors must be made from the Secondary Reserved Area (SRA). The sectors in the SRA are treated in the same fashion i.e. replacement sectors are allocated from the beginning of the SRA increasing in address, and calibration sectors are allocated from the end of the SRA in decreasing addresses.

In order to manage the allocation of reserved sectors used for replacements for defective primary sectors and sectors used for the calibration process, a 12-byte Defect Management Pointer (DMP) is defined in each sector (in addition to the user data and ECC). See 19.2.

18.3 User Area

The Data fields in the User Area are intended for recording of user data.

The User Area shall consist of a Write Once Read Many (WORM) Zone.

The User Area shall begin with track 5. At the boundaries between bands, it shall not include the last 12 tracks of a band, and it shall not include the first four tracks of the next band.

This International Standard describes a single partitioning where the User Area shall be partitioned into 34 Groups, each of which resides in one band (see 18.6.2).

Copyright International Organization for Standardization
Provided by IHS under license with ISO
No reproduction or networking permitted without license from IHS Not for Resale

Table 7 - Layout of the User Zone after Initialization

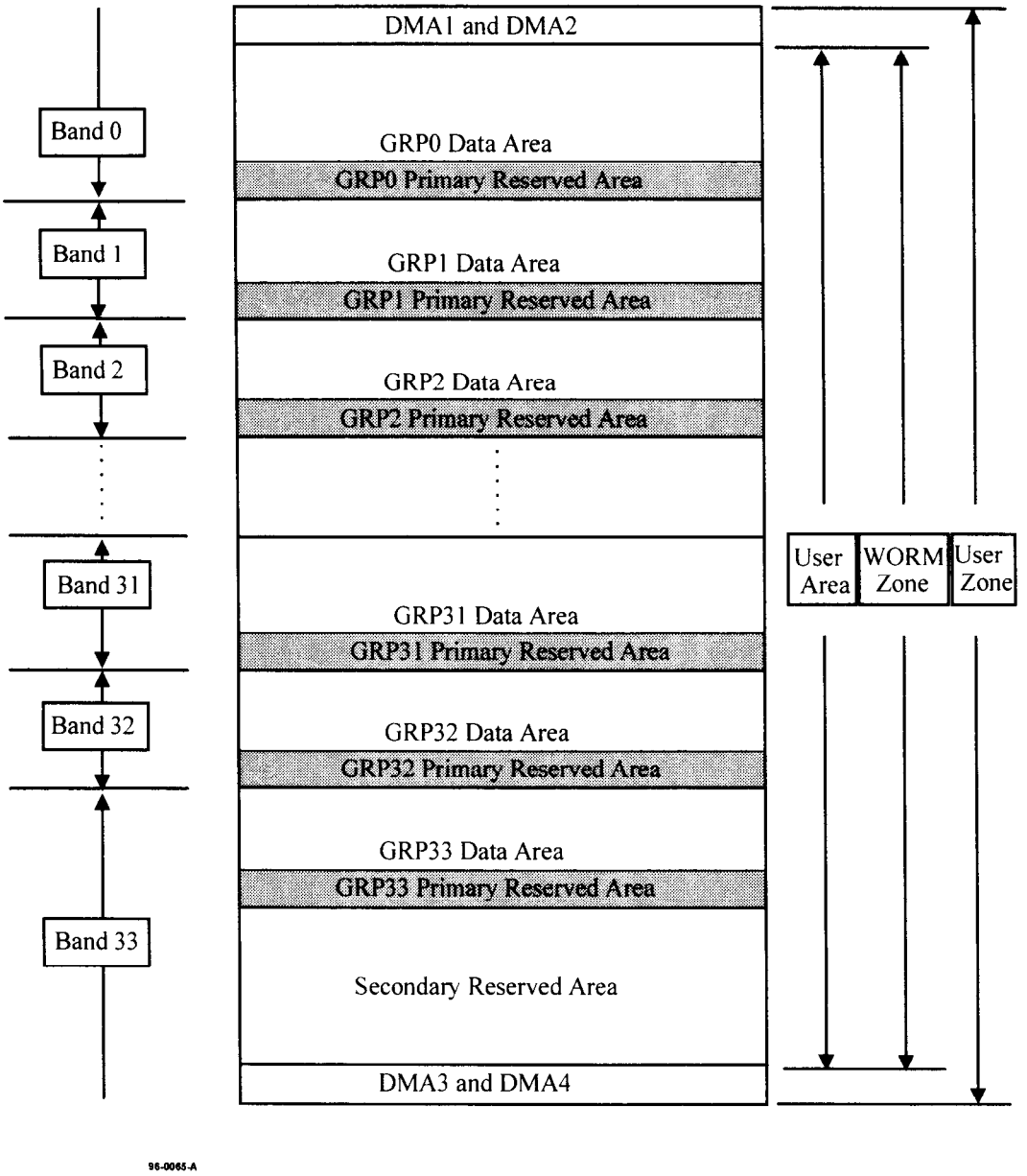

18.4 Defect Management Areas (DMAs)

The four Defect Management Areas contain information on the structure of the User Area and on the defect management. The locations of the DMAs are shown in table 7. Note that the media manufacturer should carefully consider the impact of initializing the media at the time of manufacture as this will not permit the user to choose the number of reserved sectors to be allocated. Each DMA shall have a length of 42 sectors. The address of the first sector of each DMA is given by table 8.

Copyright International Organization for Standardization
Provided by IHS under license with ISO
No reproduction or networking permitted without license from IHS
Not for Resale

Table 8 - Location of the DMAs

DMA Number	Track numbers	Sector numbers
DMA 1	0	0
DMA 2	2	8
DMA 3	75 722	0
DMA 4	75 724	8

The unused sector that lies after DMA2 and the unused sector that lies after DMA4, are reserved for future standardization.

Each DMA shall contain a Disk Definition Structure.

18.5 Disk Structure Table (DST)

The first sector of each DMA contains the Disk Structure Table (DST) after initialization of the media. The DST shall consist of a table with a length of one sector which describes the location and length of the Reserved Area options selected during initialization.

The contents of the remaining sectors of the DMAs are ignored in interchange.

The first track of the data zone is the lowest numbered track not belonging to the DMA or the Secondary Reserved Area. The data zone starts at sector number 0 of the track specified in byte 2 of the DST.

The first track of the data area in each group is defined in table 11.

The reserved area allocation option selected shall be recorded in the DST in byte 6.

The first track of the reserved area in each group for the three reserved area options are defined in table 11. The track number corresponding to the area allocation option selected shall be recorded in the DST.

The start and size of the Secondary Reserved Area for the three reserved area options are defined in table 11. The start track address and the number of tracks corresponding to the area allocation option selected shall recorded in the DST.

Table 9 summarizes the information that shall be recorded in each of the four DSTs.

Copyright International Organization for Standardization
Provided by IHS under license with ISO
No reproduction or networking permitted without license from IHS Not for Resale

Table 9 - Byte assignment of the Disk Structure Table (DST)

Byte Number	Description
00	(0A) DST Identifier
01	(0A) DST Identifier
02	(05) Track number of the first track of the first group
02	(10) Indicating that the pointer defect management has been used and that no Secondary Defect List has been recorded.
04	(00) Number of groups MSB.
05	(22) Number of groups LSB.
06	(01), (02) or (04) Reserved Area Allocation Option Selected, 1x, 2x or 4x the default. Note that this selection affects the value of bytes 7 to 151 below as indicated in table 11.
07	(FF)
08	Group 0 Start track number of Primary Reserved Area (MSB) - See table 11.
09	Group 0 Start track number of Primary Reserved Area (Next MSB)
10	Group 0 Start track number of Primary Reserved Area (Next LSB)
11	Group 0 Start track number of Primary Reserved Area (LSB)
12	Group 1 Start track number of Primary Reserved Area (MSB)
13	Group 1 Start track number of Primary Reserved Area (Next MSB)
14	Group 1 Start track number of Primary Reserved Area (Next LSB)
15	Group 1 Start track number of Primary Reserved Area (LSB)
	.
136	Group 32 Start track number of Primary Reserved Area (MSB)
137	Group 32 Start track number of Primary Reserved Area (Next MSB)
138	Group 32 Start track number of Primary Reserved Area (Next LSB)
139	Group 32 Start track number of Primary Reserved Area (LSB)
140	Group 33 Start track number of Primary Reserved Area (MSB)
141	Group 33 Start track number of Primary Reserved Area (Next MSB)
142	Group 33 Start track number of Primary Reserved Area (Next LSB)
143	Group 33 Start track number of Primary Reserved Area (LSB)
144	Secondary Reserved Area Start track number (MSB)
145	Secondary Reserved Area Start track number (Next MSB)
146	Secondary Reserved Area Start track number (Next LSB)
147	Secondary Reserved Area Start track number (LSB)
148	Number of sectors in Secondary Reserved Area (MSB)
149	Number of sectors in Secondary Reserved Area (Next MSB)
150	Number of sectors in Secondary Reserved Area (Next LSB)
151	Number of sectors in Secondary Reserved Area (LSB)
152 to 159	Shall contain the name of the manufacturer of the optical drive initializing this cartridge
160 to 167	Shall contain the serial number or identifier of the optical drive initializing this cartridge or if not available (FF).
168 to 175	Shall contain the date and time of the initialization of this cartridge in the form: mm dd yy hh mm (two bytes each) or if not available (FF).
176 to 179	Shall contain a random number generated by the optical drive initializing this cartridge. The drive manufacturer must insure that no two identifiers generated by a specific manufacturer's optical drive are identical - the inclusion of the manufacturer's name in the identifier will assure no identifiers will be identical among drive manufacturers.
180 to 1023	(FF)

18.6 Write Once Read Many (WORM) Zone

Type WORM shall contain a WORM Zone. The WORM Zone is intended for the user to write data into. The Data field of all sectors in this zone shall not contain any embossed data.

Copyright International Organization for Standardization
Provided by IHS under license with ISO
No reproduction or networking permitted without license from IHS Not for Resale

18.6.1 Location

The WORM Zone shall start from sector 0 of track 5 and extend to sector 17 of track 75 721.

18.6.2 Partitioning

During initialization of the disk, the WORM Zone shall be partitioned into 34 consecutive groups. Each of the groups within the user area is partitioned into a Data Area and a Primary Reserved Area (see table 7). Band 33 additionally contains the Secondary Reserved Area.

The Data Area is used for recording user data and the Primary Reserved Area is used for replacements of defective sectors found in the data area of this group and for write power calibration.

The Secondary Reserved Area is used for replacement of any defective sectors and for write power calibration when the sectors in the Primary Reserved Area of a particular group have been exhausted.

The number of sectors in the Reserved area is variable such that the user may select the quantity appropriate for the particular operating environment and media storage environment. For example, the user may choose the default Reserved Area value , two times the default value, or four times the default value.

Table 11 shows the data start tracks for each group. The Primary and Secondary Reserved Area start track and number of reserved tracks are also shown as a function of the Reserved Area Allocation Option selected by the user (1x, 2x, or 4x).

19 Defect Management for WORM Media

Defective sectors on the disk shall be replaced by good sectors according to the defect management scheme described below, which uses pointers imbedded in the replacement sector..

19.1 Initialization of the disk

WORM media must be initialized before it is used. During initialization of the disks, the four DMAs are recorded and the WORM Zone is partitioned into 34 groups. See Table 7.

19.2 Defect Management Pointers.

The defect management scheme uses defect management pointers (DMPs). This field in the data block consists of 12 bytes denoted by Px,y (x=1,2,3 and y=1,2,3,4). The bytes are used to specify the relationship between a replacement sector and the replaced sector found defective. A defective sector is a sector for which the ECC or the CRC has detected erroneous data that cannot be corrected. This relationship is expressed by pointers. Table 10 below shows the format of a pointer Px,y (y=1,2,3,4).

Table 10 - Format of a DMP for WORM Media

Byte 1 ($P_{x,1}$)	Byte 2 ($P_{x,2}$)	Byte 3 ($P_{x,3}$)	Byte 4 ($P_{x,4}$)
MSB of track number	Next MSB of track number	LSB of track number	Sector number

There shall be three pointers ($P_{1,y}$, $P_{2,y}$, and $P_{3,y}$) in each sector. In each data area sector, the pointers shall be recorded as follows:

- Pointer $P_{1,y}$ is Reserved, not specified by this International Standard, and ignored on interchange.
- Pointer $P_{2,y}$ is Reserved, not specified by this International Standard, and ignored on interchange.
- Pointer $P_{3,y}$ is Reserved, not specified by this International Standard, and ignored on interchange.

In each replacement sector, the pointers shall be recorded as follows:

- Pointer $P_{1,y}$ specifies the address of this sector.
- Pointer $P_{2,y}$ specifies the address of the defective sector.
- Pointer $P_{3,y}$ is Reserved, not specified by this International Standard, and ignored on interchange.

In each calibration sector, the pointers shall be recorded as follows:

- Pointer $P_{1,y}$ is Reserved, not specified by this International Standard, and ignored on interchange.
- Pointer $P_{2,y}$ is Reserved, not specified by this International Standard, and ignored on interchange.
- Pointer $P_{3,y}$ is Reserved, not specified by this International Standard, and ignored on interchange.

Copyright International Organization for Standardization
Provided by IHS under license with ISO
No reproduction or networking permitted without license from IHS Not for Resale

19.3 Write procedure

When writing sectors in the Data Area of a group, the three DMPs of these sectors are written at the same time. The pointers $P_{1,y}$, $P_{2,y}$ and $P_{3,y}$ are not specified. If a data sector in a group is found to be defective, it will be rewritten in the first available spare sector of the Primary Reserved Area of this group.

If the reassignment fails, then the next available spare will be used to retry the reassignment. If a replacement sector is later found to be defective, the next available spare will be used as a replacement. In both cases, the DMP in the replacement sector shall contain the address of the original defective data area sector. If there are no spare sectors left in this group, the defective sector will be rewritten in the first available spare sector in the Secondary Reserved Area .

19.3.1 Read Procedure

If an uncorrectable read error occurs when reading any data sectors of a group, all of the written spare sectors of the Primary Reserved Area of the group must be searched for a replacement sector. If a replacement sector is not found in the Primary Reserved Area, then all of the written spare sectors of the Secondary Reserved Area must be searched. If a replacement sector is not found, a permanent read error has been encountered.

Copyright International Organization for Standardization
Provided by IHS under license with ISO
No reproduction or networking permitted without license from IHS Not for Resale

Table 11 - Partitioning of the User Area

		Default		2 x Default		4 x Default	
Group	**Data Start Track**	**Reserve Area start track**	**No. of tracks**	**Reserve Area start track**	**No. of tracks**	**Reserve Area start track**	**No. of tracks**
0	00005	02884	74	02810	148	02663	295
1	02974	05810	73	05738	145	05592	291
2	05899	08691	72	08620	143	08477	286
3	08779	11528	70	11457	141	11316	282
4	11614	14319	69	14249	139	14111	277
5	14404	17065	68	16997	136	16860	273
6	17149	19766	67	19699	134	19565	268
7	19849	22422	66	22356	132	22224	264
8	22504	25033	65	24968	130	24839	259
9	25114	27599	64	27535	128	27408	255
10	27679	30120	63	30058	125	29932	251
11	30199	32596	62	32535	123	32412	246
12	32674	35028	60	34967	121	34846	242
13	35104	37414	59	37354	119	37236	237
14	37489	39755	58	39697	116	39580	233
15	39829	42051	57	41994	114	41880	228
16	42124	44302	56	44246	112	44134	224
17	44374	46508	55	46453	110	46344	219
18	46579	48669	54	48616	107	48508	215
19	48739	50785	53	50733	105	50628	210
20	50854	52857	51	52805	103	52702	206
21	52924	54883	50	54832	101	54732	201
22	54949	56864	49	56815	98	56716	197
23	56929	58800	48	58752	96	58656	192
24	58864	60691	47	60644	94	60550	188
25	60754	62537	46	62491	92	62400	183
26	62599	64338	45	64294	89	64204	179
27	64399	66094	44	66051	87	65964	174
28	66154	67806	42	67763	85	67678	170
29	67864	69472	41	69430	83	69347	166
30	69529	71093	40	71052	81	70972	161
31	71149	72669	39	72630	78	72551	157
32	72724	74200	38	74162	76	74086	152
33	74254	75591	37	75460	74	75198	148
Secondary Reserved Area		75628	94	75534	188	75346	376

Copyright International Organization for Standardization
Provided by IHS under license with ISO
No reproduction or networking permitted without license from IHS
Not for Resale

Section 4 - Characteristics of embossed information

20 Method of testing

The format of the embossed information on the disk is defined in clauses 13 to 18. Clauses 21 to 24 specify the requirements for the signals from grooves, Headers, embossed data, and Control Track PEP marks, as obtained when using the Reference Drive specified in clause 9.

Clauses 21 to 24 specify the average quality of the embossed information over the sector recorded according to the sector format defined in clause 15 and 16. Local deviations from the specified values, called defects, can cause tracking errors, erroneous Headers, or errors in the Data fields. These errors are covered in section 6.

20.1 Environment

All signals specified in clauses 21 to 24 shall be within their specified ranges with the cartridge in any environment in the range of allowed operating environments defined in 8.1.2.

20.2 Use of the Reference Drive

All signals specified in clauses 21 to 24 shall be measured in the indicated Channels of the Reference Drive. The drive shall have the following characteristics for the purpose of these tests.

20.2.1 Optics and mechanics

The focused optical beam shall have the properties defined in 9.2 a) to f). The disk shall rotate as specified in 9.5.

20.2.2 Read power

The read power is the optical power incident at the entrance surface, used when reading, and is specified as follows for the stated zones (see 17):

a) PEP Zone

The read power shall not exceed the value specified in 17.3.

b) SFP Zone

The read power shall not exceed the value given in byte 6 of the PEP Zone (see 17.3.2.1.4).

c) User zone

The read power shall not exceed the value given in byte 21 of the SFP Zone (see 17.4.2).

20.2.3 Read Channels

The drive shall have a read Channel, in which the total amount of light in the exit pupil of the objective lens is measured. This Channel shall have the implementation as given by Channel 1 in 9.1.

20.2.4 Tracking

During the measurement of the signals, the focus of the optical beam shall have an axial deviation of not more than

$$e_{max}\,(\text{axial}) = 0{,}8\ \mu\text{m}$$

from the recording layer, and it shall have a radial deviation of not more than

$$e_{max}\,(\text{radial}) = 0{,}11\ \mu\text{m}$$

from the centre of a track.

The radial tracking servo used for this measurement requires a higher performance than that specified in 11.4.8.

20.3 Definition of signals

Figure 23 shows the signals specified in clauses 21 to 24.

All signals are linearly related to currents through a photodiode detector, and are therefore linearly related to the optical power falling on the detector.

Channel 1 is the sum of the two photo detectors in the optical system (see 9.1) as processed by the peakhold circuit and low pass filter described in Annex N. I_{OL} and I_{OG} indicate the maximum and minimum signals of Channel 1, respectively, when the beam crosses the tracks in grooved areas without embossed Recording fields (see figure 23b). $I_{OL'}$ and $I_{OG'}$ indicate the

Copyright International Organization for Standardization
Provided by IHS under license with ISO
No reproduction or networking permitted without license from IHS Not for Resale

maximum and minimum signals of the upper envelope of Channel 1, respectively, when the beam crosses the tracks in areas containing embossed Headers and embossed Recording fields (see figure 23b).

I_1 d I_2 are the outputs of the two halves of the split photodiode detector in the tracking Channel (see 9.1 and figure 23a).

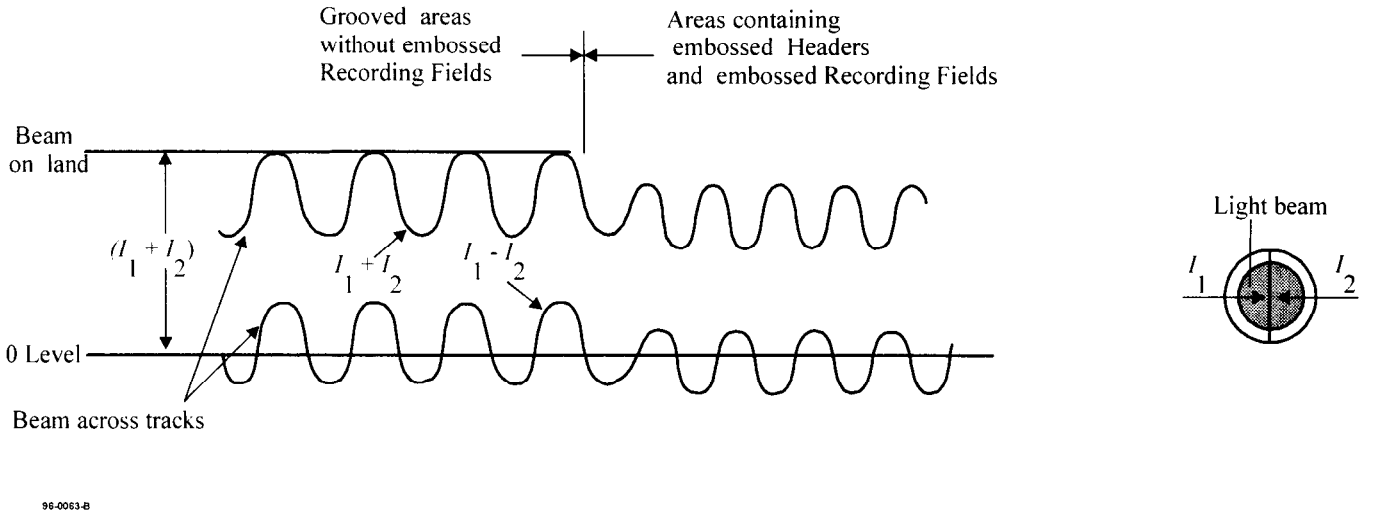

Figure 23a - Signals from grooves in the tracking Channel

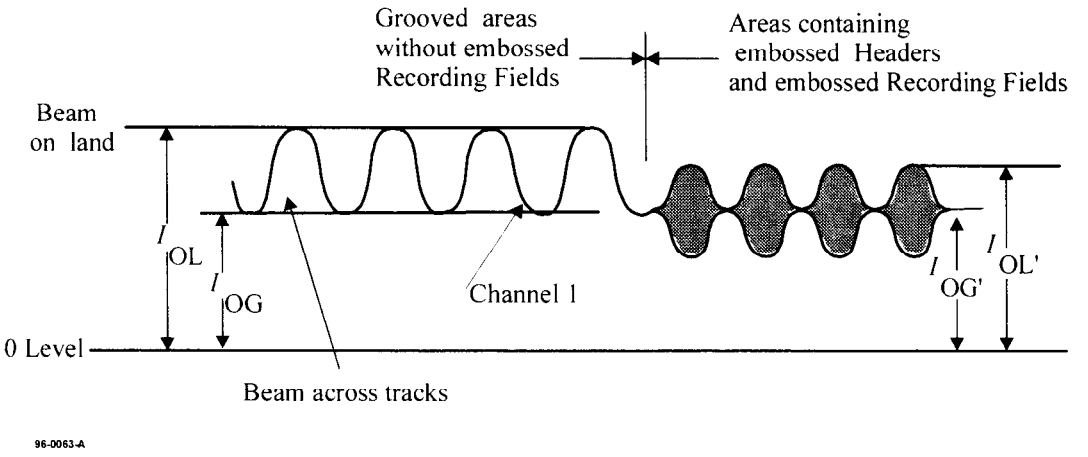

Figure 23b - Signals from grooves in Channel 1

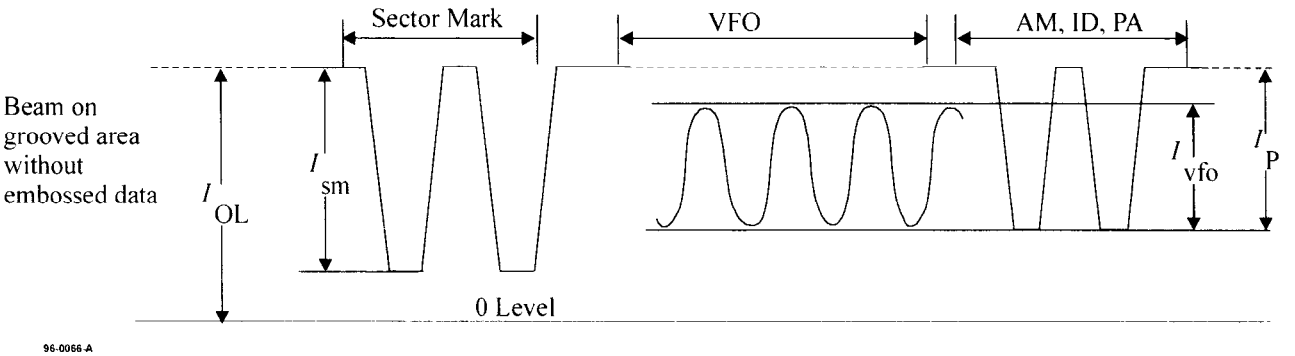

Figure 23c - Signals from Headers in Channel 1

Figure 23 - Illustration of the various parameters for read characteristics

Copyright International Organization for Standardization
Provided by IHS under license with ISO
No reproduction or networking permitted without license from IHS
Not for Resale

21 Signal from grooves

The signals ($I_1 + I_2$) and ($I_1 \ I_2$) shall be filtered using a 5th order Bessel filter with a cut-off frequency of 1,0 MHz such that frequencies above 1 MHz are attenuated by at least 40 dB thereby eliminating the effect of modulation due to embossed marks.

21.1 Cross-track signal

The cross-track signal is the sinusoidal sum signal Channel 1 in the Read Channel, when the focus of the optical beam crosses the tracks (see annex N). The signal can be used by the drive to locate the centre of the tracks. The peak-to-peak value of the cross-track signal shall meet the following requirements when measured according to annex N.

a) The peak-to-peak value of the upper envelope of the cross-track signal in areas containing embossed Headers and embossed Recording fields:

Parallel polarization

$$0,15 \leq (I_{OL}' - I_{OG}') / I_{OL} \leq 0,60$$

b) The peak-to-peak value of the cross-track signal in grooved areas in the Formatted Zone

Parallel polarization

$$0,20 \leq (I_{OL} - I_{OG}) / I_{OL} \leq 0,60$$

Over the whole disk this ratio shall not vary by more than 3 dB.

21.2 Push-pull signal

The push-pull signal is the sinusoidal difference signal (I_1 - I_2) in the tracking Channel, when the focus of the optical beam crosses the tracks. The signal can be used by the drive for radial tracking. The peak-to-peak value of the push-pull signal shall meet the following requirements

a) in grooved areas with embossed headers and recording fields in the Formatted Zone:

Parallel Polarization

$$0,25 \leq (|I_1 - I_2|) / (I_1 + I_2)_{OL} \leq 0,70$$

b) in grooved areas in the Formatted Zone:

Parallel polarization

$$0,45 \leq (|I_1 - I_2|) / (I_1 + I_2)_{OL} \leq 0,90$$

where ($|I_1$ - $I_2|$) is the peak-to-peak amplitude of the differential output of the two halves of the split photodiode detector in the Tracking Channel.

21.3 Divided push-pull signal

The first term of the divided push-pull signal is the peak-to-peak amplitude derived from the instantaneous level of the differential output (I_1-I_2) from the split photodiode detector when the light beam crosses the unrecorded or embossed recording fields of grooved tracks divided by the instantaneous level of the sum output (I_1+ I_2) from the split photodiode detector when the light beam crosses these areas.

The second term of the divided push-pull signal is the ratio of the minimum peak-to-peak amplitude derived from the instantaneous level of the differential output (I_1- I_2) divided by the instantaneous level of the sum output (I_1+I_2) from the split photodiode detector when the light beam crosses the embossed recording fields area of grooved tracks to maximum peak-to-peak amplitude derived from the instantaneous level of the differential output (I_1-I_2) divided by the instantaneous level of the sum output (I_1+I_2) from the split photodiode detector when the light beam crosses the embossed recording fields of grooved tracks.

The split photodiode detector separator shall be parallel to the projected track axis. In this measurement, the I_1 and I_2 signals shall be provided by the split photodiode detector. The tracking servo shall be operating in open-loop mode during this measurement.

The first term shall meet the following requirements in areas with embossed Recording fields:

Parallel polarization

Copyright International Organization for Standardization
Provided by IHS under license with ISO
No reproduction or networking permitted without license from IHS Not for Resale

$$0,5 \leq [(I_1 - I_2)/(I_1 + I_2)]_{pp} \leq 1,1$$

The first term shall meet the following requirements in areas without embossed Recording fields:

Parallel polarization

$$0,55 \leq [(I_1 - I_2)/(I_1 + I_2)]_{pp} \leq 1,2$$

The second term shall satisfy

$$[(I_1 - I_2)/(I_1 + I_2)]_{ppmin} / [(I_1 - I_2)/(I_1 + I_2)]_{ppmax} \geq 0,7$$

21.4 Phase depth

The phase depth of the grooves equals

$$\frac{n \times d}{\lambda} \times 360^{\circ}$$

where:

n is the index of refraction of the substrate
d is the groove depth
λ is the wavelength

The phase depth shall be less than 180°.

21.5 Track location

The tracks are located at those places on the disk where $(I_1 - I_2)$ equals 0 and (I_1+I_2) has its maximum value.

22 Signals from Headers

The signal obtained from the embossed Headers shall be measured in Channel 1 of the Reference Drive.

The signal from an embossed mark in the recording layer is defined as the peak-to-peak value of the modulation of the signal in Channel 1 caused by the mark when the beam follows a recorded track (see figure 23c)

22.1 Sector Mark Signals

The signal I_{sm} from the Sector Mark shall meet the requirement

$$0,45 \leq I_{sm} / I_{OL} \leq 0,95$$

22.2 VFO signals

The signal I_{vfo} from the marks in VFO_1 and VFO_2 fields shall meet the requirement

$$0,18 \leq I_{vfo} / I_{OL} \leq 0,90$$

where I_{vfo} is the peak-to-peak amplitude of the read signal from the VFO area.

In addition, the condition

$$I_{vfo} / I_{pmax} \geq 0,30$$

shall be satisfied within each sector, where I_{pmax} is the signal with maximum amplitude in that sector from pre-recorded mark signals of I_p defined in 22.3 and I_{vfo} is the peak-to-peak amplitude of the read signal from the VFO area.

22.3 Address Mark, ID and PA signals

The signal Ip from the marks in these fields shall meet the requirements:

$$0,9 \geq I_p / I_{OL} \geq 0,18$$

$$I_{pmin} / I_{pmax} \geq 0,30$$

The second requirement applies over any Header. I_{pmin} and I_{pmax} are signals with minimum and maximum amplitude in these fields.

Copyright International Organization for Standardization
Provided by IHS under license with ISO
No reproduction or networking permitted without license from IHS Not for Resale

22.4 Timing jitter

The header signal shall be read and detected using the read Channel circuit defined in annex H under the conditions specified in 20.2.2. The timing jitter Jt(H) and the edge shift St(H) shall be measured according to the procedure in annex J shall meet the following requirements:

Jt(H) < (0,10) T
St(H) < 0,10 T

where T is the Channel clock period, Jt(H) is the standard deviation (sigma) of the difference between the length of mark or space and the mean value of each *n* T mark or *n* T space, and St(H) is the difference between the mean value of the measured lengths and the ideal length of each mark or space. The ideal length corresponds to *n* Channel bit times T. Jt and St are illustrated in figure J.1.

All the time interval samples detected from the Header signals on the recording layer shall satisfy the condition of both Jt(H) and St(H).

23 Signals from embossed Recording fields

23.1 Signal amplitude

The Recording fields of all sectors in the SFP zones shall contain embossed marks. The signals from these marks shall be measured in Channel 1 (see 9.1). Acceptable defects of the marks are specified in section 6. The signal from all embossed Recording fields is defined as the peak-to-peak value of the modulation of the signal.

The signal I_p from marks in the Recording fields of the SFP Zone shall meet the following requirements:

$$0,9 > I_p / I_{OL} > 0,18$$

$$I_{pmin} / I_{pmax} \geq 0,30$$

The last requirement applies over Recording fields. I_{pmin} and I_{pmax} are the signals with minimum and maximum amplitude in the Recording field of a sector.

23.2 Modulation method offset

Procedure

Read and detect the data signal using the read channel circuit defined in annex H under the conditions given in 20.2.2. The threshold fractional value may be varied in this test to compensate for edge motion of the marks due to parameter variations.

Measure the detected signal in two ways using a time interval analyzer:

1) the mean leading-to-trailing edge (mark) lengths; and

2) the mean trailing-to-leading edge (space) lengths.

The measurement shall be made using 10^5 independent time interval samples on several tracks at each testing location. The offset for any desired run of length n is the absolute value of the difference of the detected signal length L_n minus *n* times T. Adjust the threshold level once for both measurements to minimize the worst case offset for this radial position and express it as a percentage of the Channel bit time T. The modulation method offset O_{mod} is the maximum percentage offset over all *n* and over all radial positions R.

$$O_{mod} = \max_{n,R} \left(\frac{|L_n - nT|}{T} \right) \text{ x } 100 \text{ (\%)}$$

The modulation method offset O_{mod} shall be less than 10% of the time period T of one Channel bit.

23.3 Timing Jitter

The embossed data signal shall be read and detected using the read Channel circuit defined in annex H under the conditions specified in 20.2.2. The timing jitter Jt_d shall be measured according to the procedure in annex J and shall meet the following requirement:

$Jt_d \leq (0,10)$ T

Copyright International Organization for Standardization
Provided by IHS under license with ISO
No reproduction or networking permitted without license from IHS Not for Resale

where T is the Channel clock period and Jt_d is the standard deviation (sigma) of the difference between the measured length of mark or space and the mean value of each nT mark or nT space. The ideal length corresponds to n Channel bit times T and Jt are illustrated in Annex J, figure J.1.

All the time interval samples detected from the embossed data signals on the recording layer shall satisfy the former conditions of Jt_d.

23.4 Byte Errors

The embossed data in a sector as read in Channel 1 shall not contain any byte errors that cannot be corrected by the error correction defined in 28.2.7.

24 Signals from Control Track PEP marks

The density of tracks and the shape of marks in the PEP Zone shall be such that the cross-track loss meets the requirement

$$\frac{I_{m\,max}}{I_{m\,min}} \leq 2{,}0$$

The signal I is obtained from Channel 1 (see 9.1). The signal I_m is the maximum amplitude in a group of three successive marks. $I_{m\,max}$ is the maximum value and $I_{m\,min}$ is the minimum value of I_m obtained over one physical track. $I_{m\,max}$ shall be greater than 0,4 I_o, where I_o is the signal obtained from Channel 1 in an unrecorded ungrooved area of the PEP zone. The effect of defects shall be ignored.

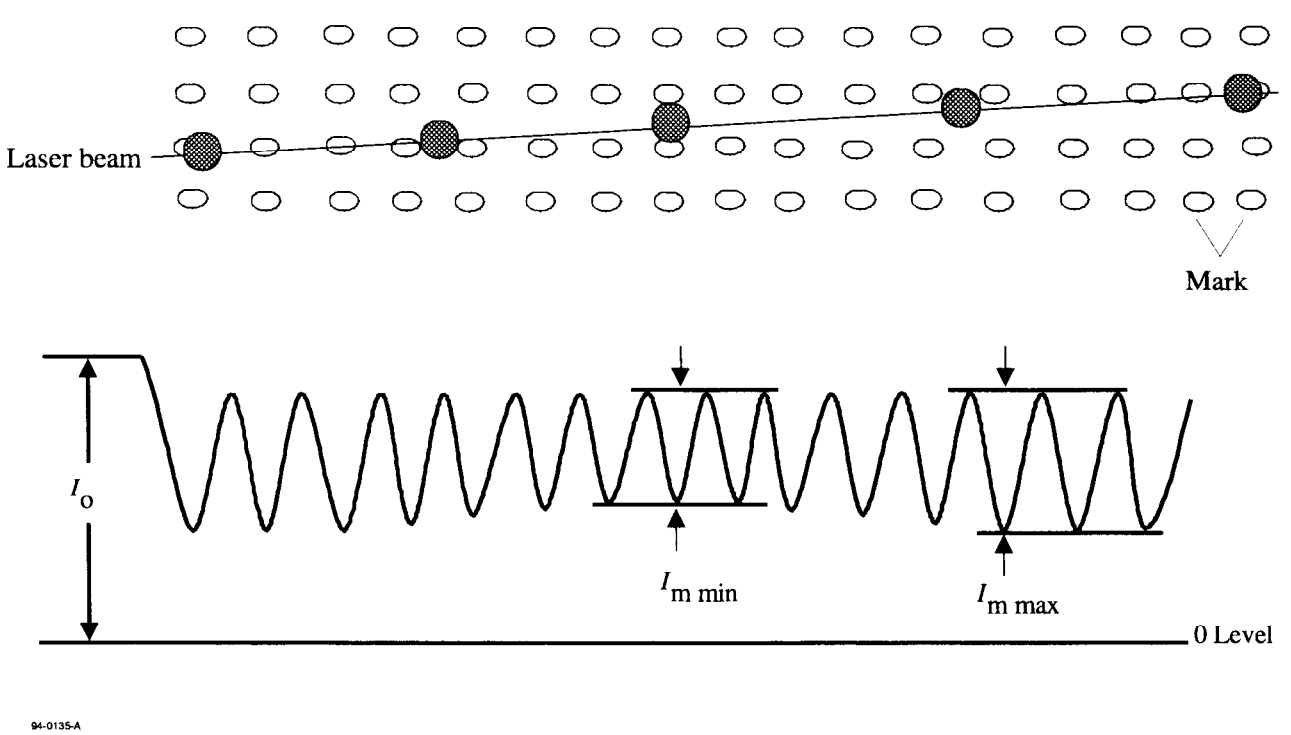

Figure 24 - Path of the laser beam when crossing tracks and the resulting PEP signals

Copyright International Organization for Standardization
Provided by IHS under license with ISO
No reproduction or networking permitted without license from IHS
Not for Resale

Section 5 - Characteristics of the recording layer

25 Method of testing

Clauses 26 to 28 describe a series of tests to assess the properties of the Recording layer, as used for writing and reading data. The tests shall be performed in the Recording field of the sectors in the WORM Zone. The write and read operations necessary for the tests shall be made on the same Reference Drive.

Clauses 26 to 28 specify only the average quality of the recording layer. Local deviations from the specified values, called defects, can cause write problems. These defects are covered in section 6.

25.1 Environment

All signals in clauses 26 to 28 shall be within their specified ranges with the cartridge in any environment in the range of allowed operating environments defined in 8.1.2.

25.2 Reference Drive

The write tests described in clauses 26 to 28 shall be measured in Channel 1 of the Reference Drive. The drive shall have the following characteristics for the purpose of these tests.

25.2.1 Optics and mechanics

The focused optical beam shall have the properties defined in 9.2 a) to f). The disk shall rotate as specified in 9.5.

25.2.2 Read power

The optical power incident on the entrance surface of the disk and used for reading the information shall be in the range specified in 20.2.2.

25.2.3 Read Channel

The Reference Drive shall have a Read Channel which can detect marks in the recording layer. This Channel shall have an implementation equivalent to that given by Channel 1 in 9.3

The edge positions in time shall be measured for testing purposes by a threshold detection method. The threshold value is referenced to the centre of the peak-to-peak envelope of the readback signal. The positive peak and negative peak signals of the envelope circuit (see annex L) shall each contain a single pole filter with a -3 dB roll-off point at 50 kHz.

Nominally the threshold value shall be zero if the laser power calibration is perfect and there are no parameter variations. However, in some measurements the threshold value may have to be adjusted to minimize the effects of mark size changes due to parameter variations during writing.

25.2.4 Tracking

During the measurement of the signals, the focus of the optical beam shall follow the tracks as specified in 20.2.4.

25.2.5 Signal detection for testing purposes

The signal from the Read Channel is not equalized before detection. The signal shall be rolled off with a 3-pole Butterworth filter with a cut-off frequency of half the Channel clock frequency of the band being tested. All read testing is performed at 3 000 rpm.

Nominally the threshold value shall be zero if the laser power calibration is perfect and there are no parameter variations. However, in some measurements the threshold value may have to be adjusted to minimize the effects of mark size changes due to parameter variations during writing.

25.3 Write conditions

The requirement for all tests shall be met over the operating environment except where otherwise noted.

25.3.1 Write pulse and power

Marks are recorded on the disk by pulses of optical power superimposed onto a specified bias power of 0,5 mW ± 0,05 mW at the test rotational frequency .

The pulse shape for the purpose of testing will be a nominally rectangular pulse as shown in annex K with duration Tp and power Pw .

Tp is the full width, half maximum duration of the light pulse. Tp shall be measured by a high speed photo detector at the output of the laser. Tp shall be 20,0 ns ± 0,2 ns with a 10% to 90% rise and fall time of less than 3 ns.

Copyright International Organization for Standardization
Provided by IHS under license with ISO
No reproduction or networking permitted without license from IHS Not for Resale

The measurement of laser power shall be done in pulsed operation by averaging, for example one pulse every 50 ns, using a spherical radiometer. The averaging method of measuring the laser power will minimize the accumulation of pulse width and pulse amplitude tolerances.

The value of P_w used in any media tests shall be the one measured for that particular piece of media using the method in 25.3.2. Values within 5% of P_w that were measured by the media manufacturer when using a pulse width of exactly 20 ns at radii 30 mm, 45 mm, and 60 mm on their typical media shall be recorded in the SFP zone.

2T, 4T and 8T marks are used in all media tests. The 2T mark shall be formed with a single 20 ns pulse that starts at the beginning of a Channel clock period. The 4T and 8T marks are formed with two and four identical zone pulses, respectively, each starting at the beginning of a Channel clock period, and spaced exactly two Channel clock periods apart. All pulses shall have the same power P_w and duration T_p.

25.3.2 Pulse power determination

The following procedure shall be used by the media manufacturer to measure the value of the 4 T pulse power P_w that is recorded in the SFP zone.

Write several tracks at 30, 45 and 60 mm radii of the disk under test by repeatedly writing the following test pattern:

Run Length:	2T	6T	4T	6T
Mark or Space:	M	S	M	S

The recording shall be done at a media temperature of 25 ^{o} C ± 1° C, at the test rpm.

Read and detect the readback signal with the detection method given in 25.2.5. Adjust focus for maximum readback signal amplitude of the 2T mark and set the threshold value at 50% of the peak-to-peak signal amplitude from the 4T mark for the test. Vary focus ± 0,25 µm and check output for best E(th).

Measure the average distance between edges, namely L2, L4, and L6 for the 2T, 4T and 6T runs respectively, using a time interval analyzer (TIA) repeated for 30 mm, 45 mm, and 60 mm radii. Averaging should be done using 10^5 independent time interval samples on several tracks at each radial location. Note that the 6T distribution on the TIA will in general be bimodal. The amount of bimodality depends on the thermal properties of the media. The value of L6 is the same of this bimodal distribution.

Adjust the P_w power so that L6 is as close to 6T as possible. Since the length of L6 can be minimized at two points, the P_w power recorded in the SFP zone shall be at a point where L6 is decreasing in length as write power is increased.

25.3.3 Media power sensitivity

The pulse power *Pw* is the upper bound of the power required to form 4T marks as a function of pulse duration T_p. P_w is given by the reciprocity relationship:

$$P_w = C\left(\frac{1}{T_p} + \frac{1}{\sqrt{T_p}}\right) \text{ mW}$$

where 10 ns < T_p < 60ns,

otherwise P_w = 4 mW.

The following formula shall be used by the media manufacturer to measure the value of the media power sensitivity C using the T_p and P_w data from 25.3.2:

$$C = P_w \frac{T_p\sqrt{T_p}}{T_p + \sqrt{T_p}}$$

The value for C shall be less than 25 at radii 30 mm, 45 mm, and 60 mm.

25.4 Definition of signals

The signals in Channel 2 are linearly related to the difference between the currents through the photodiode detectors K_1 and K_2, and are therefore linearly related to the optical power falling on the detectors (see 9.1).

Copyright International Organization for Standardization
Provided by IHS under license with ISO
No reproduction or networking permitted without license from IHS Not for Resale

26 Imbalance of difference signal

The imbalance of the difference signal is the ratio of the amplitude of the signal in Channel 2 divided by the amplitude of the signal in Channel 1 measured over one revolution of the disk in an unwritten track. (Note that the gains for Channel 1 and Channel 2 must be equal). The phase retarder in the optical system shall be in the neutral position (See 9.1 optics of the reference drive). Imbalance can be caused by birefringence of the disk.

The imbalance shall not exceed 0,06 in the User Zone, throughout the environmental operating range and in a bandwidth from d.c. to 50 kHz.

27 Write characteristics

27.1 Resolution

I_L is the peak-to-peak value of the signal obtained in Channel 1 (see 9.2) from 4T marks and 4T spaces written under any of the conditions given in 25.3, and read under the conditions specified in 20.2.2 c).

I_H is the peak-to-peak value of the signal obtained in Channel 2 from 2T marks and 2T spaces written under the conditions given in 25.3, the lowest interval allowed by the RLL(1,7) code for each zone ± 0,1 MHz, and read under the condition specified in 20.2.2 c).

The resolution I_H/I_L (see figure 25) shall not be less than 0,30 within any sector. It shall not vary by more than ± 0,10 over a track.

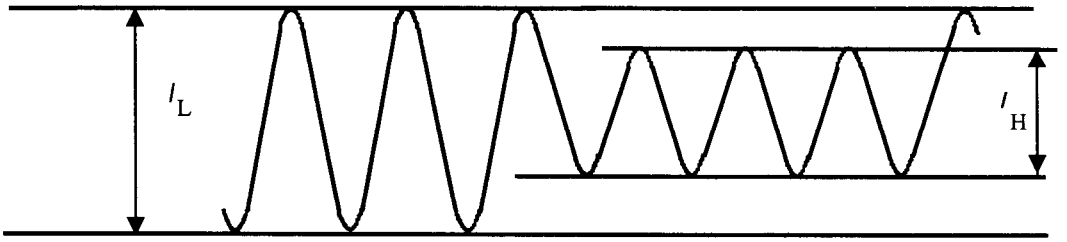

Figure 25 - Definition of I_L and I_H

27.2 Narrow-band signal-to-noise ratio

The narrow-band signal-to-noise ratio is the ratio of the signal level to the noise level of a specified pattern, measured in a 30 kHz bandwidth. It shall be determined as follows.

Write a series of 2T marks followed by 2T spaces in the Recording field of a series of sectors at a frequency f_0 of the highest frequency allowed by the RLL(1,7) code for each zone ± 0,1 MHz. The write conditions shall be as specified in 25.3.1.

Read the Recording fields in Channel 1 with the Read Channel specified in annex H under the conditions specified in 25.2 using a spectrum analyzer with a bandwidth of 30 kHz. Measure the amplitudes of the signal and the noise at the frequency f_0 as indicated in figure 26. The measurements shall be corrected for the effect of the Header fields and for any instrumentation error in order to obtain the value for the Recording field only.

The narrow- band signal-to-noise ratio is

$$20 \log_{10} \frac{\text{signal level}}{\text{noise level}}$$

The narrow band signal-to-noise ratio shall be greater than 45 dB for all tracks in any sector in the User Zone for all phase differences between -15° and +15° in the optical system as defined in 9.1.

Note - It is permitted to use a spectrum analyzer with a bandwidth of 3 kHz and to convert the measured value to that for a 30 kHz value.

Copyright International Organization for Standardization
Provided by IHS under license with ISO
No reproduction or networking permitted without license from IHS Not for Resale

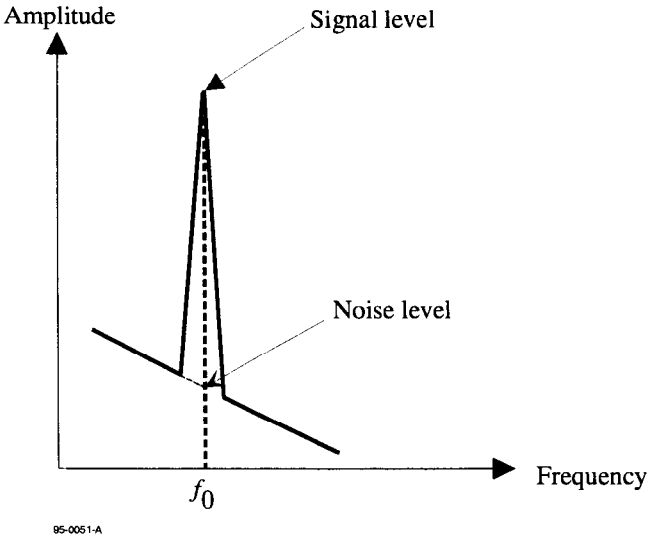

Figure 26 - Amplitude versus frequency for the WORM -optical signal

27.3 Cross-talk ratio

The cross-talk ratio definition and measurement procedure describe the entities to be measured in terms of physical tracks. These physical tracks can consist of one or more logical tracks (see 13). The number of logical tracks involved in the measurement must be adjusted for the Band in which the measurement is made.

27.3.1 WORM track test method

For WORM tracks the test on cross-talk shall be carried out on any group of five adjacent unrecorded physical tracks, designated (*n*-2), (*n*-1), *n*, (*n*+1), (*n*+2), in the WORM Zone.

Write a series of 2T marks followed by 2T spaces at a frequency *f*1 for each zone ± 0,1 MHz in the Recording field of the sectors in track *n*. The write conditions shall be as specified in 25.3.

Read the Recording fields of the sectors in the tracks (*n*-1),n and (*n*+1) under the conditions specified in 25.2.2 and 25.2.3.

The cross-talk from a track *n* to track (*n*-1) and to track (*n*+1) shall be lower than -26 dB.

27.4 Timing Jitter

The timing jitter can be obtained from the TIA data in clause 25.3.2. Measure the length in time of the leading-to-trailing edge of the detected data from the 4T mark (L4) with the TIA. The timing jitter is the standard deviation (one sigma) of the measured time interval L4. The measurements shall be made using 10^5 independent time interval samples on several tracks at each radial location.

The value of timing jitter (due to the media) shall be less than 7,5 % of the time period T of one Channel bit for radii 30 mm, 40 mm, and 60 mm.

27.5 Media thermal interaction

The following formulas shall be used by the media manufacturer to measure the value of the media thermal interaction that is recorded in the SFP zone..

The formulas use the L2, L4, and L6 measurement data from 25.3.2.

First calculate the effective Channel clock period T of the measurements:

$$T = \frac{L2 + L4 + 2 \times L6}{18}$$

This *T* shall be checked to make sure that it has the correct value for the band in which recording is performed.

Calculate and record the thermal interaction error E(th) using the following formula:

$$E(th) = \frac{(L4 - L2 - 2 \times T)}{T} \times 100 \qquad \% \text{ of } T$$

Copyright International Organization for Standardization
Provided by IHS under license with ISO
No reproduction or networking permitted without license from IHS
Not for Resale

The value shall be 5% ≤ E(th) ≤ 17% of the Channel clock period T at R = 30 mm.

Section 6 - Characteristics of user data

28 Method of testing

Clauses 29 and 30 describe a series of measurements to test conformance of the user data on the disk with this International Standard. It checks the legibility of both embossed and user-written data. The data is assumed to be arbitrary. The user-written data may have been written by any drive in any environment. The read tests shall be performed on the Reference Drive.

Whereas clauses 20 to 28 disregard defects, clauses 29 and 30 include them as unavoidable deterioration of the read signals. The gravity of a defect is determined by the correctability of the ensuing errors by the Error Detection and Correction circuit in the read Channel defined below. The requirements in clauses 29 and 30 define a minimum quality of the data, necessary for data interchange.

28.1 Environment

All signals specified in clauses 29 and 30 shall be within their specified ranges with the cartridge in any environment in the range of allowed operating environments defined in 8.1.2. It is recommended that before testing the entrance surface of the optical disk shall be cleaned according to the instructions of the manufacturer of the disk.

28.2 Reference Drive

All signals specified in clauses 29 and 30 shall be measured in the indicated Channels of the Reference Drive. The drive shall have the following characteristics for the purpose of these tests:

28.2.1 Optics and mechanics

The focused optical beam shall have the properties specified in 9.2 a) to f). The disk shall rotate as specified in 9.5.

28.2.2 Read power

The optical power incident on the entrance surface of the disk (used for reading the information) shall be in the range specified in 20.2.2.

28.2.3 Read amplifiers

The read amplifiers after the photodiode detectors in Channels 1 and 2 shall be as specified in 9.3.

28.2.4 Mark Quality

The signals from both read amplifiers shall be converted from analog to binary with an edge detector as defined in annex H. The output signals from Channel 1 shall be filtered without equalization with the specified low-pass filter, and compared with their threshold levels of the comparator which shall be between 0,25 and 0,75 for the threshold fractional values. The threshold levels shall be adjusted to minimize the maximum offset (or bias) of the mark and space intervals from their desired (or true) values of 2 T, 3 T, ..., 7 T, 8 T. The output signals from the comparator are converted to binary signals with the edge detector.

Mark intervals and space intervals are equal to leading-to-trailing edge intervals and trailing-to-leading intervals respectively.

The modulation method offset O_{mod} in this section means the minimized maximum offset of the mark and space intervals measured with the output signals from the edge detectors, and it shall be expressed as a percentage of the Channel bit time T. Measurement procedure (refer to Channel 2 of annex H) shall be as follows: (See also annex L).

a) Measure using a time interval analyzer mean values of all mark and space intervals separately from the user data, and observe the maximum offset of the separately measured mean values of the intervals corresponding to 2 T, 3 T, ..., 7 T, 8 T.

b) Adjust the threshold level of the comparator in order to minimize the maximum offset observed in a). Finally, the observed maximum offset is the modulation method offset O_{mod} of the objective user data.

The timing jitter in this section is defined as the standard deviation of the separately measured 2 T, 3 T, ..., 7 T, 8 T mark and space intervals excluding outlying observations by defects, using a time interval analyzer with the output signals from the edge detector of the marks and spaces in a sector excluding the modulation method offset. Therefore, independent interval samples for this measurement are limited by the number of marks and spaces in a sector. The timing jitters shall be expressed as a percentage of Channel bit time T.

The converter for Channel 1 shall operate correctly for analog signals from embossed marks with amplitudes as determined by clauses 22 and 23.

Copyright International Organization for Standardization
Provided by IHS under license with ISO
No reproduction or networking permitted without license from IHS Not for Resale

The converter for Channel 1 shall also operate correctly for analog signals from user-written marks with an amplitude as determined by clause 25.

28.2.5 Channel bit clock

The signals from the analog-to-binary converters shall be virtually locked to the Channel bit clock/clocks which provides/provide the Channel bit windows of 0,70 T effective width for timing the leading and/or trailing edges of the binary signals. Channel bit clock/clocks shall be adjusted in order to minimize the accumulated value/values of the timing errors of the leading to leading, leading to trailing, trailing to leading, and trailing to trailing edges from the Channel bit clock/clocks.

28.2.6 Binary-to-digital converters

The binary signals shall be correctly converted to the data bytes with the binary-to-digital converters based on the sector format and the recording code defined in clauses 15 and 16.

28.2.7 Error correction

Correction of errors in the data bytes shall be carried out by an error detection and correction system based on the definition in F.2 and F.3 of annex F.

28.2.8 Tracking

During measurement of the signals, the focus of the optical beam shall follow the tracks as specified in 20.2.4.

29 Minimum quality of a sector

This clause specifies the minimum quality of the Header and Recording field of a sector as required for interchange of the data contained in that sector. The quality shall be measured on the Reference Drive specified in 28.2.

A byte error occurs when one or more bits in a byte have a wrong setting, as detected by ECC and/or CRC circuits.

29.1 Headers

29.1.1 Sector Mark

At least three of the five long marks of the Sector Mark shall have the timing specified in 15.2 and the signals shall have the amplitude specified in 22.1.

29.1.2 ID fields

At least one of the two ID fields in a Header read in Channel 1 shall not have any byte errors, as checked by the CRC in the field.

29.2 User-written data

29.2.1 Recording field

The flag field shall start at 60 Channel bits ± 6 Channel bits from the end of the pre-formatted header. If an ALPC field is recorded, it shall start 144 Channel bits ± 6 Channel bits from the end of the pre-formatted header. The VFO_3 field shall start at 216 Channel bits ± 6 Channel bits from the end of the pre-formatted header. The Data field shall end at 240 Channel bits ± 84 Channel bits from the end of the sector.

29.2.2 Byte errors

The user-written data in a sector as read in Channel 1 shall not contain any byte errors that cannot be corrected by the error correction defined in 28.2.7.

29.2.3 Modulation method offset

The user-written marks in a sector as read in Channel 1 shall have a modulation method offset O_{mod} less than 10 % of the time period T of one Channel bit.

29.2.4 Timing jitter

The user-written marks in a sector as read in Channel 1 shall have timing jitters due to the media less than 7,5% of the time period T of one Channel bit.

30 Data interchange requirements

A disk offered for interchange of data shall comply with the following requirements. (See annex M.)

Copyright International Organization for Standardization
Provided by IHS under license with ISO
No reproduction or networking permitted without license from IHS Not for Resale

30.1 Tracking

The focus of the optical beam shall not jump tracks unintentionally.

30.2 User-written data

Any sector written in the WORM Zone that does not comply with 29.2 shall have been replaced according to the rules of the defect management as defined in clause 19.

30.3 Quality of disk

The quality of the disk is reflected in the number of replaced sectors in the WORM Zone. This International Standard allows a maximum of 10 000 replaced sectors per side (see clause 19) for the default value of the Reserved Area Allocation option. See table 9.

Copyright International Organization for Standardization
Provided by IHS under license with ISO
No reproduction or networking permitted without license from IHS
Not for Resale

Annex A
(normative)

Air cleanliness class 100 000

The classification of air cleanliness is based on a particle count with a maximum allowable number of specified minimum sized particles per unit volume, and on a statistical average particle size distribution.

A.1 Definition

The particle count shall not exceed a total of 3 500 000 particles per cubic metre of a size 0,5 µm or larger.

The statistical average particle size distribution is given in figure A.1 Class 100 000 means that 3 500 000 particles per cubic metre of a size of 0,5 µm or larger are allowed, but only 25 000 particles per cubic metre of a size of 5,0 µm or larger.

It shall be recognized that single sample distribution may deviate from this curve because of local or temporary conditions. Counts below 350 000 particles per cubic metre are unreliable except when a large number of a samplings is taken.

A.2 Test method

For particles of size in the range 0,5 µm to 5,0 µm, equipment employing light-scattering principles shall be used. The air in the controlled environment is sampled at a known flow rate. Particles contained in the sampled air are passed through an illuminated sensing zone in the optical chamber of the instrument. Light scattered by individual particles is received by a photo detector which converts the light pulses into electrical current pulses. An electronic system relates the pulse height to the particle size and counts the pulses such that the number of particles in relation to particle size is registered or displayed.

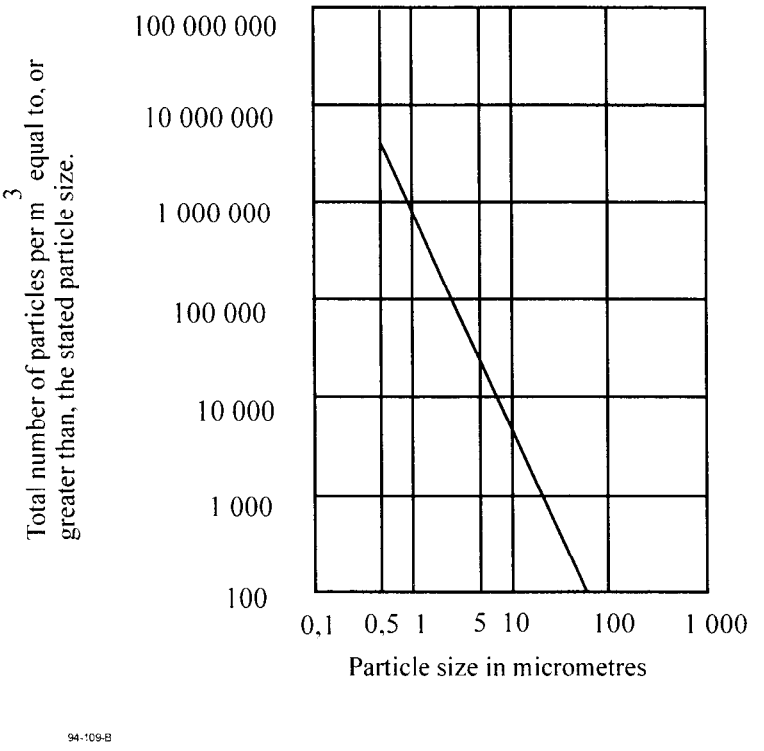

Figure A.1 - Particle size distribution curve

Copyright International Organization for Standardization
Provided by IHS under license with ISO
No reproduction or networking permitted without license from IHS
Not for Resale

Annex B
(normative)

Edge distortion test

B.1 The distortion test checks if the case is free from unacceptable distortion and protrusions along its edges. The test is made by causing the cartridge to pass through the vertical slot of a gauge while applying a specified force in addition to the gravitational pull.

B.2 The gauge shall be made of a suitable material, e.g. of chrome-plated carbon steel. The inner surfaces shall be polished to a surface finish of 5 μm peak-to-peak.

B.3 The dimensions shall be as follows (see figure B.1):

A = 155,0 mm
B = 136,0 mm ± 0,1 mm
C = 10,0 mm ± 0,1 mm
D = 11,40 mm ± 0,01 mm
E = 11,60 mm min.

B.4 When the cartridge is inserted vertically into the gauge, a vertical downward force F of 2,7 N maximum, applied to the center of the top edge of the cartridge, shall cause the cartridge to pass through the gauge.

Copyright International Organization for Standardization
Provided by IHS under license with ISO
No reproduction or networking permitted without license from IHS
Not for Resale

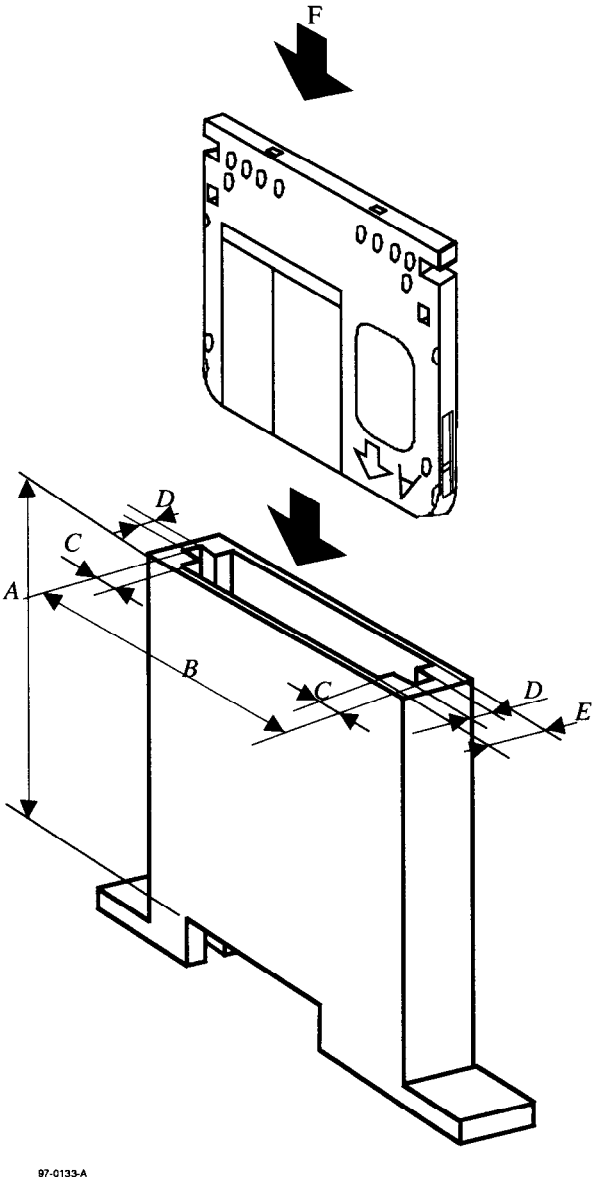

Figure B.1 - Distortion gauge

Copyright International Organization for Standardization
Provided by IHS under license with ISO
No reproduction or networking permitted without license from IHS
Not for Resale

Annex C
(normative)

Compliance test

C.1 The compliance test checks the flatness and flexibility of the case by forcing the four reference surfaces of the cartridge into a plane.

C.2 The location of the four reference surfaces S1, S2, S3 and S4 is defined in clause 10.5.4 and figure 5.

C.3 The test gauge consists of a base plate on which four posts P1, P2, P3 and P4 are fixed so as to correspond to the surfaces S1, S2, S3 and S4 respectively (see figure C.1). The dimensions are as follows (see figure C.2):

Posts P1 and P2

D_a = 6,50 mm ± 0,01 mm

Db = 4,00 $^{+\ 0,00\ mm}_{-\ 0,02\ mm}$

Ha = 1,0 mm ± 0,1 mm

Hb = 2,0 mm max.

Posts P3 and P4

D_c = 5,50 mm ± 0,01 mm

After assembly, the upper annular surfaces of the four posts shall lie between two horizontal planes spaced 0,01 mm apart.

C.4 The cartridge shall be placed with its reference surfaces onto the posts of the horizontal gauge. A vertical down force F of 0,4N shall be exerted on the cartridge opposite each of the four posts.

C.5 Requirements

Under the conditions of C.4, any three of the four surfaces S1 to S4 shall be in contact with the annular surface of respective posts. Any gap between the remaining surface S and the annular surface of its post shall not exceed 0,1 mm.

Copyright International Organization for Standardization
Provided by IHS under license with ISO
No reproduction or networking permitted without license from IHS Not for Resale

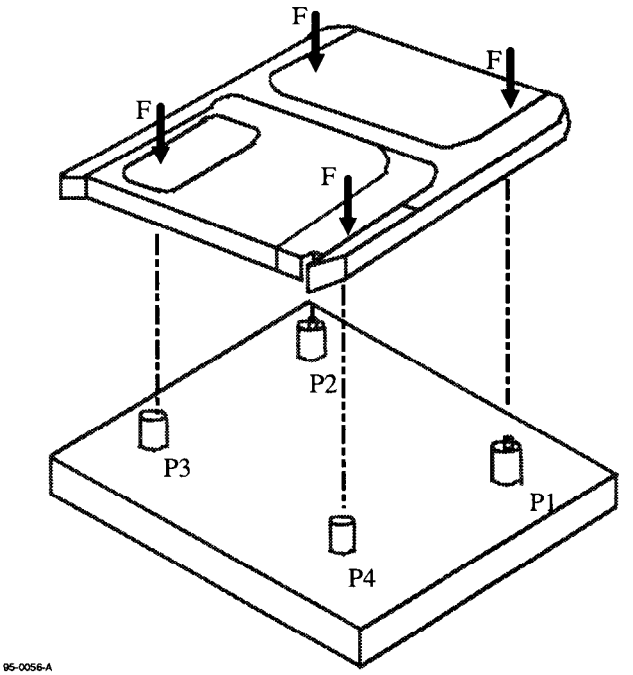

Figure C.1 - Compliance gauge

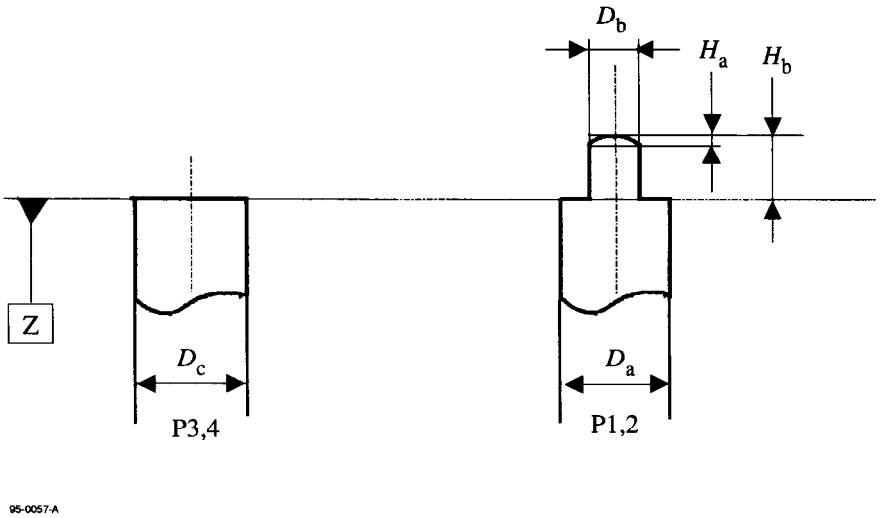

Figure C.2 - Detail of posts

Copyright International Organization for Standardization
Provided by IHS under license with ISO
No reproduction or networking permitted without license from IHS
Not for Resale

Annex D
(normative)

Test method for measuring the adsorbent force of the hub

D.1 The purpose of this test is to determine the magnetic characteristic of the magnetizable material of the hub.

D.2 Dimensions

The test device (see figure D.1) consists of a spacer, a magnet, a back yoke and a centre shaft. The dimensions of test device are as follows :

D_d = 8,0 mm ± 0,1 mm
D_e = 20,0 mm ± 0,1 mm
D_f = 19,0 mm max.
D_g = 3,9 mm $^{+\ 0,0\ mm}_{-\ 0,1\ mm}$
H_c = 0,40 mm ± 0,01 mm
H_d = 1,2 mm (typical, to be adjusted to meet the force requirement of D.4)

D.3 Material

The material of the test device shall be :

Magnet : Any magnetizable material, typically Sm-Co
Back yoke : Any suitable magnetizable material
Spacer : Non-magnetizable material or air gap
Centre shaft : Non-magnetizable material

D.4 Characteristics of the magnet with back yoke

Number of poles : 4 (typical)

Maximum energy product (BH_{max}) : 175 kJ/m^3 ± 16 kJ/m^3

The characteristics of the magnet with back yoke shall be adjusted so that with a pure nickel plate of the following dimensions (see figure D.2), and the adsorbent force of this plate at the point of H_c = 0,4 mm when spaced from the magnet surface shall be 9,5 N ± 0,6 N.

D_h = 7,0 mm ± 0,1 mm
D_j = 22,0 mm ± 0,1 mm
H_e = 2,00 mm ± 0,05 mm

D.5 Test condition for temperature

These conditions shall be as specified in 8.1.1.

Copyright International Organization for Standardization
Provided by IHS under license with ISO
No reproduction or networking permitted without license from IHS Not for Resale

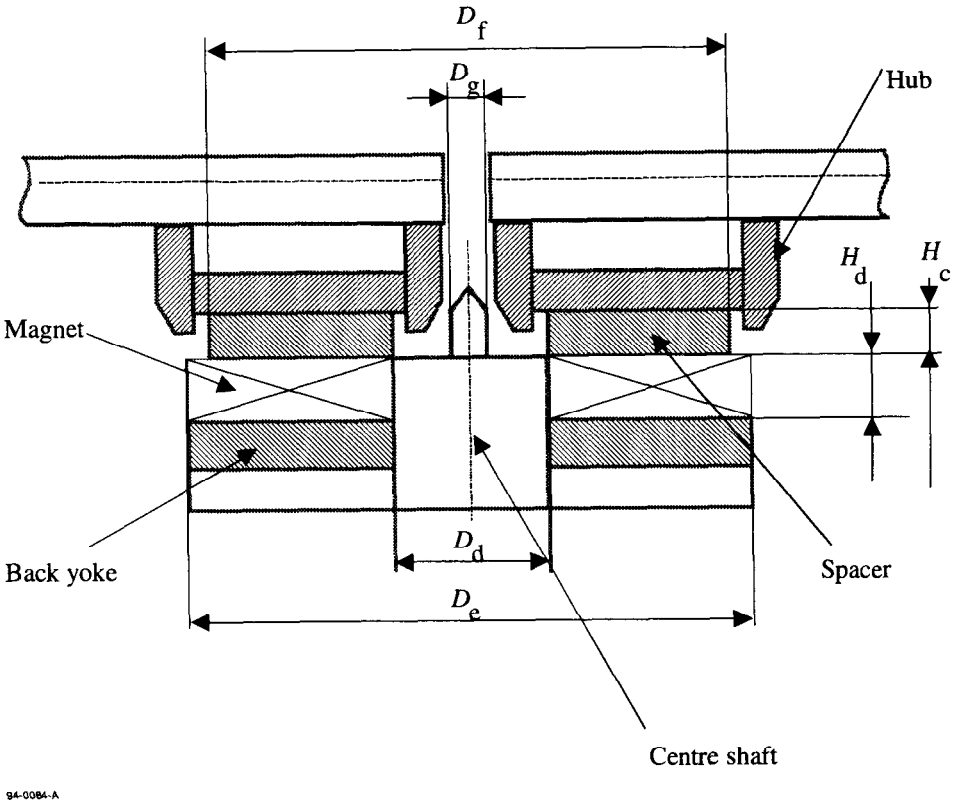

Figure D.1 - Test device for the clamping characteristic of the hub

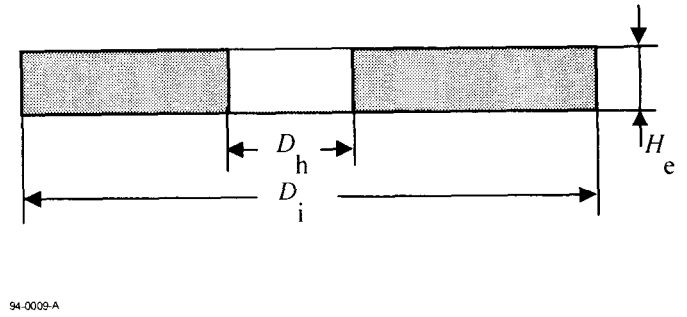

Figure D.2 - Calibration plate of the test device

Copyright International Organization for Standardization
Provided by IHS under license with ISO
No reproduction or networking permitted without license from IHS
Not for Resale

Annex E
(normative)

CRC for ID fields

The sixteen bits of the CRC shall be computed over the first three bytes of the ID field. The generator polynomial shall be

$$G(x) = x^{16} + x^{12} + x^5 + 1$$

The residual polynomial shall be

$$R_c(x) = \left(\sum_{i=8}^{i=23} \bar{a}_i x^i + \sum_{i=0}^{i=7} a_i x^i \right) x^{16} \mod G(x)$$

and a_i denotes a bit of the first three bytes and $\bar{a}_i$ an inverted bit. The highest order bit of the first byte is a_{23}.

The sixteen bits c_k of the CRC are defined by

$$R_c(x) = \sum_{k=0}^{k=15} c_k x^k$$

where c_{15} is recorded as the highest order bit of the fourth byte in the ID field.

Copyright International Organization for Standardization
Provided by IHS under license with ISO
No reproduction or networking permitted without license from IHS
Not for Resale

Annex F
(normative)

Interleave, CRC, ECC, Resync for the Data Field

F.1 Interleave

F.1.1 Interleave for 1 024-byte sectors

The different bytes shall be designated as follows.

D_n are user data bytes

$P_{h,m}$ are DMP bytes

C_k are CRC check bytes

$E_{s,t}$ are ECC check bytes

These bytes shall be ordered in a sequence A_n in the order in which they shall be recorded on the disk. This order is the same as that in which they are input into the controller. Depending on the value of n, these elements are:

for $1 \le n \le 1\,024$: $A_n = D_n$

for $1025 \le n \le 1036$: $A_n = P_{h,m}$

for $1037 \le n \le 1040$: $A_n = C_k$

for $1041 \le n \le 1200$: $A_n = E_{s,t}$

where:

$$h = \text{int}\left[\frac{n - 1\,025}{4}\right] + 1$$

$$m = [\,(n - 1025) \bmod 4\,] + 1$$

$$k = n - 1036$$

$$s = [\,(n - 1041) \bmod 10\,] + 1$$

$$t = \text{int}\left[\frac{n - 1\,041}{10}\right] + 1$$

The notation int[x] denotes the largest integer not greater than x.

The first three parts of A_n are 10-way interleaved by mapping them onto a two-dimensional matrix B_{ij} with 104 rows and 10 columns. Thus

for $1 \le n \le 1040$: $B_{ij} = A_n$

where:

$$i = 103 - \text{int}\left[\frac{n - 1}{10}\right]$$

$$j = (n - 1) \bmod 10$$

Copyright International Organization for Standardization
Provided by IHS under license with ISO
No reproduction or networking permitted without license from IHS Not for Resale

F.2 CRC

F.2.1 General

The CRC and the ECC shall be computed over the Galois field based on the primitive polynomial

$$G_p(x) = x^8 + x^5 + x^3 + x^2 + 1$$

The generator polynomial for the CRC bytes shall be

$$G_c(x) = \prod_{i=136}^{i=139} (x + \alpha^i)$$

where the element $a^i = (ß^i)^{88}$, with ß being a primitive root of $G_p(x)$. The value of the n-th bit in a byte is the coefficient of the n-th power of ß, where $0 \le n \le 7$, when ß is expressed on a polynomial basis.

F.2.2 CRC for 1 024-byte sectors

The four check bytes of the CRC shall be computed over the user data and the DMP bytes.

The information polynomial shall be

$$I_c(x) = \left[\sum_{i=1}^{i=103} \left(\sum_{j=0}^{j=9} \left(B_{i,j} \right) x^i \right) \right] + \sum_{j=0}^{j=5} \left(B_{0,j} \right) x^0$$

The contents of the four check bytes c_k of the CRC are defined by the residual polynomial

$$R_c(x) = I_c(x) x^4 \mod G_c(x)$$

$$R_c(x) = \sum_{k=1}^{k=4} c_k x^{4-k}$$

The last equation specifies the storage locations for the coefficients of the polynomial.

F.3 ECC for 1 024-byte sectors

The 160 check bytes of the ECC shall be computed over the user bytes, the DMP bytes and the CRC bytes. The corresponding 10 information polynomials shall be:

$$I_{E_j}(x) = \sum_{i=0}^{i=103} \left(B_{i,j} \right) x^i$$

where $0 \le j \le 9$.

The contents of the 16 check bytes $E_{s,t}$ for each polynomial $I_{Ej}(x)$ are defined by the residual polynomial

$$R_{E_j}(x) = I_{E_j}(x) x^{16} \mod G_E(x)$$

$$R_{E_j}(x) = \sum_{t=1}^{t=16} E_{j+1,t} x^{16-t}$$

The last equation specifies the storage locations for the coefficients of the polynomials.

Copyright International Organization for Standardization
Provided by IHS under license with ISO
No reproduction or networking permitted without license from IHS Not for Resale

F.4 Resync

The Resync fields (see annex G) shall be inserted in the Data field to prevent loss of synchronization and to limit the propagation of errors in the user data. They are numbered consecutively and shall contain one of the following pattern of Channel bits.

0X0 100 000 001 000 000 100 00Y

0X0 100 000 001 000 000 101 00Y

Where bits X and Y are set to ZERO or ONE based on the preceding or following data patterns.

For 1 024-byte sectors, a field RSn shall be inserted between bytes A_{30n} and A_{30n+1},

where $1 \leq n \leq 39$.

F.5 Recording sequence for the Data field

The elements of the Data field shall be recorded on the disk according to sequence A_n or A'_n, as applicable, immediately following the Sync bytes and with the Resync bytes inserted as specified in F.4.

Figure F.1 shows in matrix form the arrangement of these elements. The sequence of recording is from top-to-bottom and left-to-right.

SB	designates a Sync byte
D	designates a user byte
RS	designates a Resync byte
P	designates a DMP byte
C	designates a check byte for CRC
E	designates a check byte for ECC
(FF)	designates a (FF) byte

For 1 024-byte sectors (figure F.1) the first 104 columns contain in rows 0 to 9 the user bytes, the DMP bytes and the CRC check bytes. The next 16 columns contain only the ECC check bytes.

Copyright International Organization for Standardization
Provided by IHS under license with ISO
No reproduction or networking permitted without license from IHS Not for Resale

Column No. $j \rightarrow$				0	1	2	3	4	5	6	7	8	9	Row No. $i \downarrow$
SB1	SB2	SB3	SB4	D1	D2	D3	D4	D5	D6	D7	D8	D9	D10	103
				D11	D12	D13	D14	D15	D16	D17	D18	D19	D20	102
				D21	D22	D23	D24	D25	D26	D27	D28	D29	D30	101
		RS1	RS1	D31	D32	D33	D34	D35	D36	D37	D38	D39	D40	100
				D41	D42	D43	D44	D45	D46	D47	D48	D49	D50	99
				D51	D52	D53	D54	D55	D56	D57	D58	D59	D60	98
		RS2	RS2	D61	D62	D63	D64	D65	D66	D67	D68	D69	D70	97
104 rows														. . .
				D971	D972	D973	D974	D975	D976	D977	D978	D979	D980	6
				D981	D982	D983	D984	D985	D986	D987	D988	D989	D990	5
		RS33	RS33	D991	D992	D993	D994	D995	D996	D997	D998	D999	D1000	4
				D1001	D1002	D1003	D1004	D1005	D1006	D1007	D1008	D1009	D1010	3
				D1011	D1012	D1013	D1014	D1015	D1016	D1017	D1018	D1019	D1020	2
		RS34	RS34	D1021	D1022	D1023	D1024	P1,1	P1,2	P1,3	P1,4	P2,1	P2,2	1
				P2,3	P2,4	P3,1	P3,2	P3,3	P3,4	C1	C2	C3	C4	0
				E1,1	E2,1	E3,1	E4,1	E5,1	E6,1	E7,1	E8,1	E9,1	E10,1	-1
		RS35	RS35	E1,2	E2,2	E3,2	E4,2	E5,2	E6,2	E7,2	E8,2	E9,2	E10,2	-2
				E1,3	E2,3	E3,3	E4,3	E5,3	E6,3	E7,3	E8,3	E9,3	E10,3	-3
16 rows														. . .
		RS39	RS39	E1,14	E2,14	E3,14	E4,14	E5,14	E6,14	E7,14	E8,14	E9,14	E10,14	-14
				E1,15	E2,15	E3,15	E4,15	E5,15	E6,15	E7,15	E8,15	E9,15	E10,15	-15
				E1,16	E2,16	E3,16	E4,16	E5,16	E6,16	E7,16	E8,16	E9,16	E10,16	-16

Figure F.1 - Data field configuration, 1 024-byte sectors, ECC with 10-way interleave

Copyright International Organization for Standardization
Provided by IHS under license with ISO
No reproduction or networking permitted without license from IHS
Not for Resale

Annex G
(normative)

Determination of Resync pattern

DSV (Digital Sum Value) is used in the descriptions which follow. Other acronyms include PLL (Phase Lock Loop), PPM (Pulse Position Modulation) and PWM (Pulse Width Modulation).

G.1 Conditions of Resync pattern

The Resync pattern has the following characteristics to satisfy its required function:

1) The Resync pattern is an irregular Channel bit pattern of seven consecutive ZERO bits and a ONE bit followed by six consecutive ZERO bits that does not occur in the (1,7) modulation code.

2) The irregularity of Resync pattern is detectable using either only leading edges or only trailing edges when dual PLL is used.

3) The number of ONEs in Resync pattern is switchable from odd number to even number or vice versa for minimizing the d.c. level fluctuation of the data pattern in the Data field of a sector.

4) The length of the Resync pattern is two bytes.

G.2 Resync pattern

Selection of one of the two Resync patterns shown below shall be made in order to minimize the d.c. level fluctuation.

The selection criteria is described in G.5.

	Data 1	Resync area	Data 2
		Resync pattern	
Resync 1	0x0	100000001000000100	00y
Resync 2	0x0	100000001000000101	00y

where: x = ZERO or ONE
y = ZERO or ONE

Copyright International Organization for Standardization
Provided by IHS under license with ISO
No reproduction or networking permitted without license from IHS
Not for Resale

G.3 Generation algorithm of Resync pattern

Previous Data 1		Resync Area								Next Data 2
Data bits	Channel bits	00	Assumed data bits						01	Data bits
x_1 x_2		0x0	Resync Pattern					z	00y	x_3 x_4
00	0 001	010	100	000	001	000	000	100	001	0x
								0	000	1x
								1	001	0x
								1	000	1x
00	1 001	010	100	000	001	000	000	100	001	0x
								0	000	1x
								1	001	0x
								1	000	1x
01	0 001	010	100	000	001	000	000	100	001	0x
								0	000	1x
								1	001	0x
								1	000	1x
01	1 010	000	100	000	001	000	000	100	001	0x
								0	000	1x
								1	001	0x
								1	000	1x
10	0 101	010	100	000	001	000	000	100	001	0x
								0	000	1x
								1	001	0x
								1	000	1x
10	1 ---				does not occur					
11	0 010	000	100	000	001	000	000	100	001	0x
								0	000	1x
								1	001	0x
								1	000	1x
11	1 ---				does not occur					

where z = ZERO for Resync 1
z = ONE for Resync 2

Note 1: x_1 and x_2 are encoded assuming the following information bits are ZERO ZERO
Note 2: The values of these information bits are the assumed value for encoding.
Note 3: This Channel bit was inverted after encoding in order to generate the irregular pattern
Note 4: The value of the last three bits of the Resync area is determined by:
1) the previous Channel bit assumed to be ZERO
2) the two information bits (assumed to be ZERO ONE);
3) the state of Data 2 information bit x_3, per the (1,7) encode table 3.

Copyright International Organization for Standardization
Provided by IHS under license with ISO
No reproduction or networking permitted without license from IHS Not for Resale

G.4 Minimization of d.c. level

The criteria for selecting either Resync pattern 1 or Resync pattern 2 in order to minimize the d.c. level fluctuation is based on the Channel bits of the Data area, and 0x0, 00y in the Resync area.

Data		Resync area		Data
		Resync pattern		
		100000001000000100		
Data Block	0x0	(Resync pattern 1)	00y	Data Block
		100000001000000101		
		(Resync Pattern 2)		

where x = ZERO or ONE
y = ZERO or ONE

The decision is made to select either Resync pattern 1 or Resync pattern 2 according to the procedure described in G.5.

G.5 Determination of Resync pattern

The Resync pattern to be used shall be determined by the following procedure.

1. Convert the Channel bits described in PPM data into PWM data in order to simplify handling.

   For example, if the PPM data is

   ... 0010100010010 ...
   the PWM data shall be
   ... 0011000011100 ...

   The DSV calculation shall be defined in terms of PWM data such that ZERO = -1 and ONE = +1.

   (see example below)

Example of calculation of Block DSV_m and Resync DSV_m

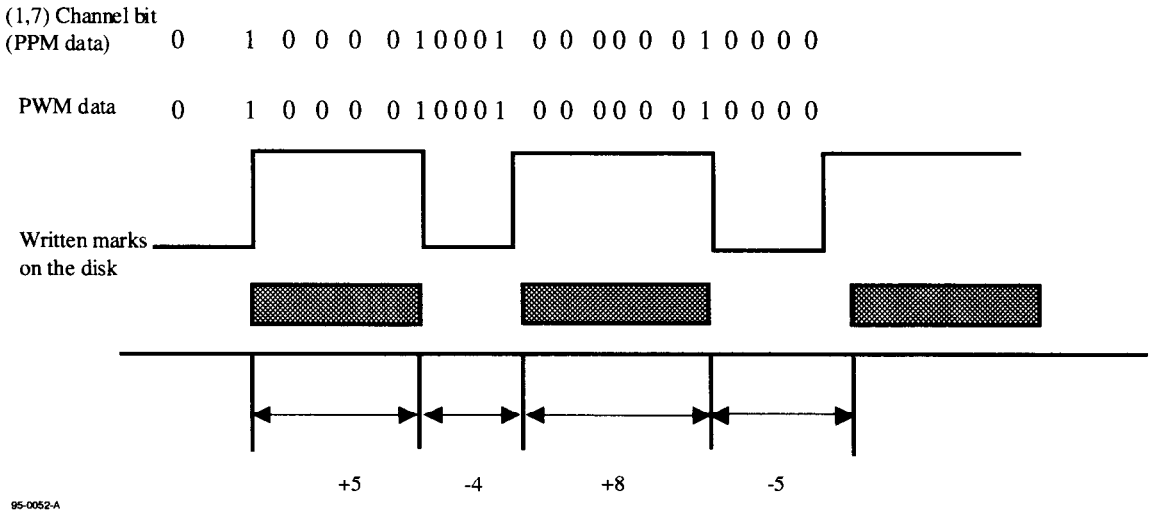

DSV_m is calculated as

$$DSV_m = (+5 - 4 + 8 - 5 \ldots)$$

2. The Resync area shall be divided into two parts (RS || INV), where both parts are concatenated as follows:

Copyright International Organization for Standardization
Provided by IHS under license with ISO
No reproduction or networking permitted without license from IHS Not for Resale

RS = 0x010000000100000010 in PPM data
INV = 000y(INV1) or 100y(INV2) in PPM data .

3. The user data field shall be concatenated as

   $VFO3 \parallel SYNC \parallel B_0 \parallel RS_1 \parallel INV1 \text{ (or INV2)} \parallel B_1 \parallel RS_2 \parallel ...$
   $... \parallel INV1 \text{ (or INV2)} \parallel B_m \parallel RS_{m+1} \parallel ... ... \parallel INV1 \text{ (or INV2)} \parallel B_N$

   where

   $m = 1$ to N
   $N = 39$ in the 1 024-byte sector,

   (See figure G.1)

4. The DSV(z) function shall be defined such that the argument (z), which is a PPM data stream, shall result in the PWM DSV sum based on the last PWM state of the PWM data preceding the data in the (z) argument.

5. INV1 or INV2 shall be selected in step m using the following algorithm:

   $P_0 = DSV(VFO3 \parallel SYNC \parallel B_0 \parallel RS_1)$

   $P_m = P_{m-1} + DSV(INV1 \parallel B_m \parallel RS_{m+1})$
   or $P_m = P_{m-1} + DSV(INV2 \parallel B_m \parallel RS)$

   Select INV1 or INV2 to minimize $|P_m|$.

   $P_N = P_{N-1} + DSV(INV1 \parallel B_N)$
   or $P_N = P_{N-1} + DSV(INV2 \parallel B_N)$

   Select INV1 or INV2 to minimize $|P_N|$.

This procedure shall be repeated from $m = 1$ to N, where $N = 39$ in 1 024-byte sectors. If $|P_m|$ is the same for Resync pattern 1 and Resync pattern 2, Resync pattern 1 shall be selected.

Copyright International Organization for Standardization
Provided by IHS under license with ISO
No reproduction or networking permitted without license from IHS Not for Resale

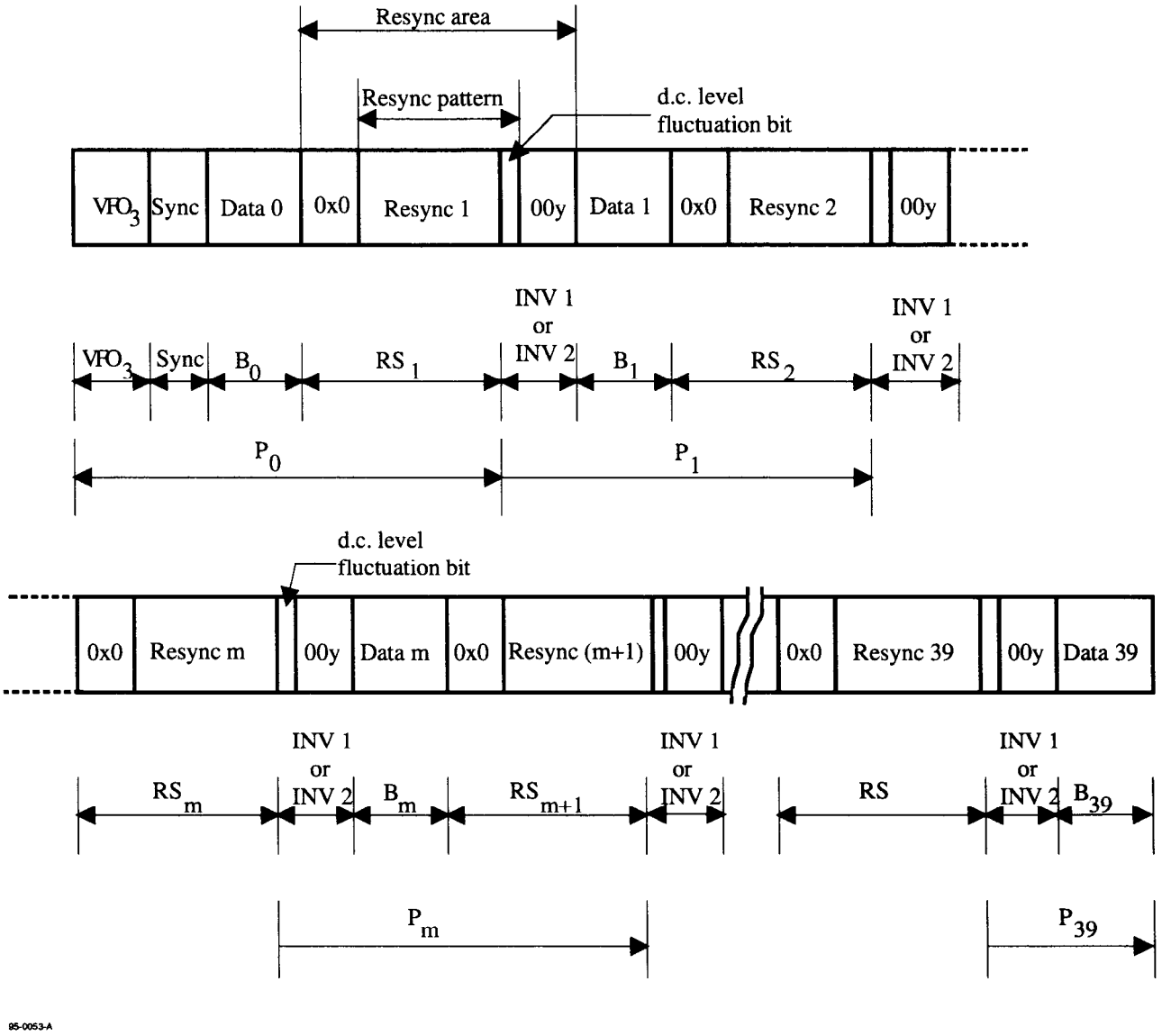

Figure G.1 - Example of Resync byte

Copyright International Organization for Standardization
Provided by IHS under license with ISO
No reproduction or networking permitted without license from IHS
Not for Resale

Annex H
(normative)

Read Channel for measuring NBSNR and jitter

NBSNR and jitter shall be measured by using the following read Channel.

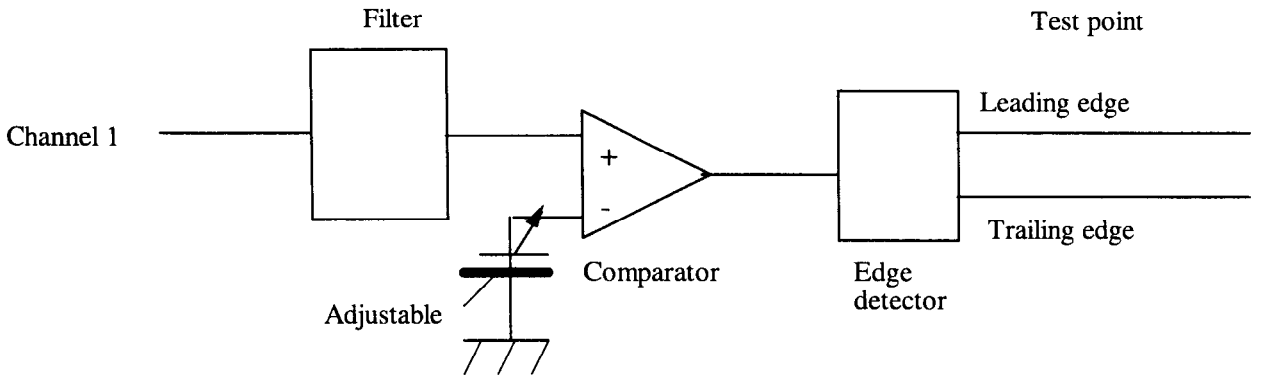

Input signal:

Channel 1, for embossed marks and user written marks

Filter specifications:

1) Equalizer: No
2) Filter type: 5th Bessel function
3) Low pass filter: Cut-off frequency = 2T frequency of the band being tested (2 x f_c)

Copyright International Organization for Standardization
Provided by IHS under license with ISO
No reproduction or networking permitted without license from IHS Not for Resale

Annex J
(normative)

Timing jitter measuring procedure

The timing jitter of mark lengths or space lengths shall be measured using the following procedures.

1) Set the threshold level of the detector circuit such that the 2 T mark and 2 T space of the VFO is exactly 2 Channel bit times T long.
2) Hold the threshold level, and detect the signal edges.
3) Measure the mark lengths or space lengths using a Time Interval Analyzer.
4) Acquire 10^5 independent time interval samples excluding the data from defective areas.
5) Calculate the mean value L_n of mark or space lengths for each length n.
6) Calculate the difference between the measured mean value L_n and the ideal length of corresponding mark or space (i.e. n times T), and take the maximum value among then as St.
7) Calculate the standard deviation Jt of the timing jitter distribution; the difference between the measured length of mark or space and the mean value of corresponding mark or space length L_n shall be taken as samples.

where Jt and St are shown in figure J.1.

The mark lengths and the space lengths shall be separately examined, and the specifications should be satisfied even in the worst case.

In case of header signal evaluation, the threshold level shall be set using VFO_1 and the time interval samples shall be measured using the AM through PA fields.

In case of embossed data signal evaluation, the threshold level shall be set using VFO_3 and the time interval samples shall be measured using the Sync and Data field in the user data area, including all time interval samples from user data, DMP, CRC, ECC, and Resync.

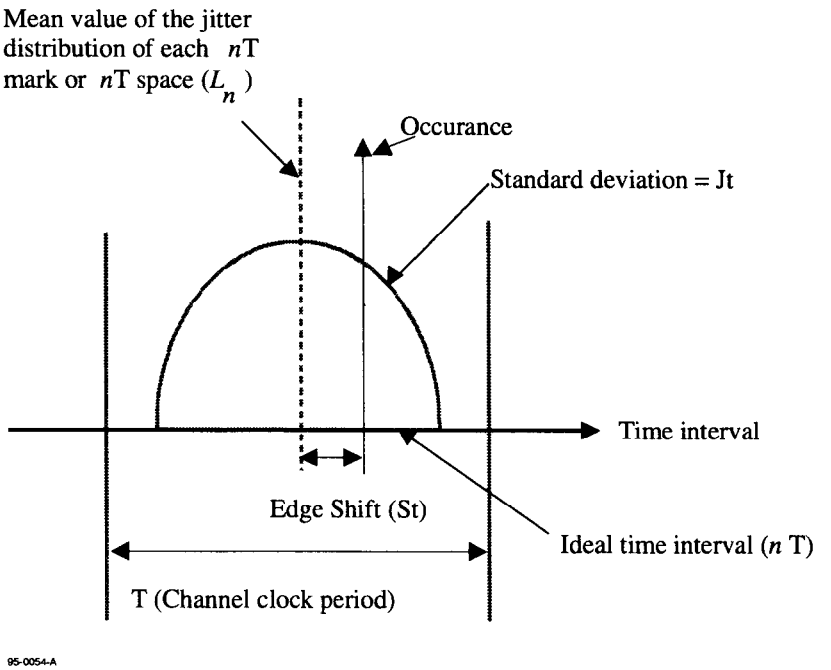

Figure J.1 - Measured timing distribution yielding Jitter J(t) and Edge Shift S(t)

Copyright International Organization for Standardization
Provided by IHS under license with ISO
No reproduction or networking permitted without license from IHS
Not for Resale

Annex K
(normative)

Definition of write pulse shape

The rise and fall times, T_r and T_f, shall each be less than 4 ns for any write pulse width T_p.

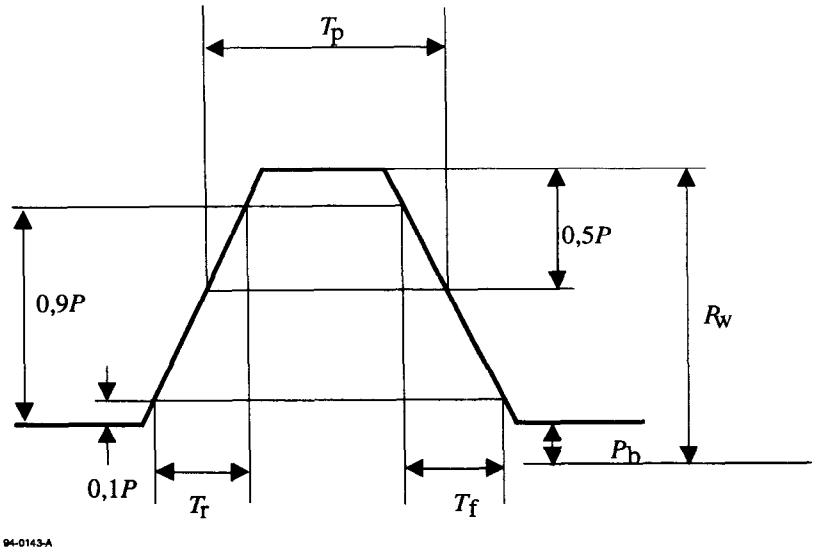

P_w : write power
P_b : bias power
T_r : rise time
T_f : fall time
T_p : write pulse width
P : P_w - P_b

Copyright International Organization for Standardization
Provided by IHS under license with ISO
No reproduction or networking permitted without license from IHS
Not for Resale

Annex L
(normative)

Implementation Independent Mark Quality Determination (IIMQD) for the interchange of recorded media

L.1 Test patterns

The IIMQD offset test uses two special patterns consisting of seven marks and seven spaces each, one mark and one space of each run length from 2T to 8T, to test the drive's ability to form marks of the proper length for the purposes of media interchange.

The following procedure shall be used to determine IIMQD for the interchange of recorded media.

Write one of the following test patterns as a group many times on several tracks at the 30 mm, 45 mm, and 60 mm radii using the laser power write method of the drive under test. A separate test shall be done for each pattern.

Pattern No. 1:

2T	2T	3T	3T	4T	4T	5T	5T	6T	6T	7T	7T	8T	8T
M	S	M	S	M	S	M	S	M	S	M	S	M	S

Pattern No. 2:

2T	2T	3T	3T	4T	4T	5T	5T	6T	6T	7T	7T	8T	8T
S	M	S	M	S	M	S	M	S	M	S	M	S	M

where M and S stand for mark and space respectively.

L.2 Detection Method

Read and detect the data signal with the following equalization coupled with to the detection method given in 25.2.3. The threshold value TV may be varied in this test to compensate for the edge motion of the marks due to parameter variations.

$$Eq(\omega) = 1 - 2A\cos(\omega \cdot 2T)$$

where: $A = 0,1$

$\omega = 2\pi f$

T is the Channel clock period for the zone being read.

This equalizer can be implemented with a five tap, tapped delay line filter having tap weights of -A, 0, 1, 0 , -A and 0, -A ,1, -A, 0 and clock periods as specified in clause 14.1 for radius 30 mm, 45 mm, and 60 mm respectively with a tap delay of 35,8 ns and a disk speed of 3 000 rpm.

Measure the detected signal from the written tracks in two ways using a time interval analyzer:

1) the mean leading-to-trailing edge (mark) lengths, and

2) the mean trailing-to-leading edge (space) lengths.

L.3 Measurement process

The measurements shall be made using 10^5 independent time interval samples on several tracks at each radial location. The offset for any desired run of length n is the absolute value of the difference of the detected signal length L_n minus n times T. Adjust the threshold level once for both measurements for each pattern to minimize the worst case mark and space offset for this radial position and express it as a percentage of the Channel bit time T. The modulation method offset for the given test pattern is the maximum percentage offset over all run lengths n and over all radial positions R. The overall offset O_{mod} with regard to media interchange is the larger of the numbers for each pattern, p.

Copyright International Organization for Standardization
Provided by IHS under license with ISO
No reproduction or networking permitted without license from IHS Not for Resale

$$O_{\text{mod}} = \max_{n,R} \left(\frac{|L_n - nT|}{T} \right) \text{ x } 100 \text{ (\%)}$$

The modulation method offset O_{mod} shall be less than 10 % of the time period T of one Channel bit.

L.4 Threshold follower

This tracking threshold follower (or equivalent) shall be used during certain signal measurements as defined in the specific test procedures. A tracking threshold follower is required to establish and maintain the signal base line level for the data detection process. Its purpose is to compensate for local media variances in reflectivity, recording sensitivity, and for changes in signal d.c. content caused by some recorded data patterns observed during the measurement process.

Copyright International Organization for Standardization
Provided by IHS under license with ISO
No reproduction or networking permitted without license from IHS Not for Resale

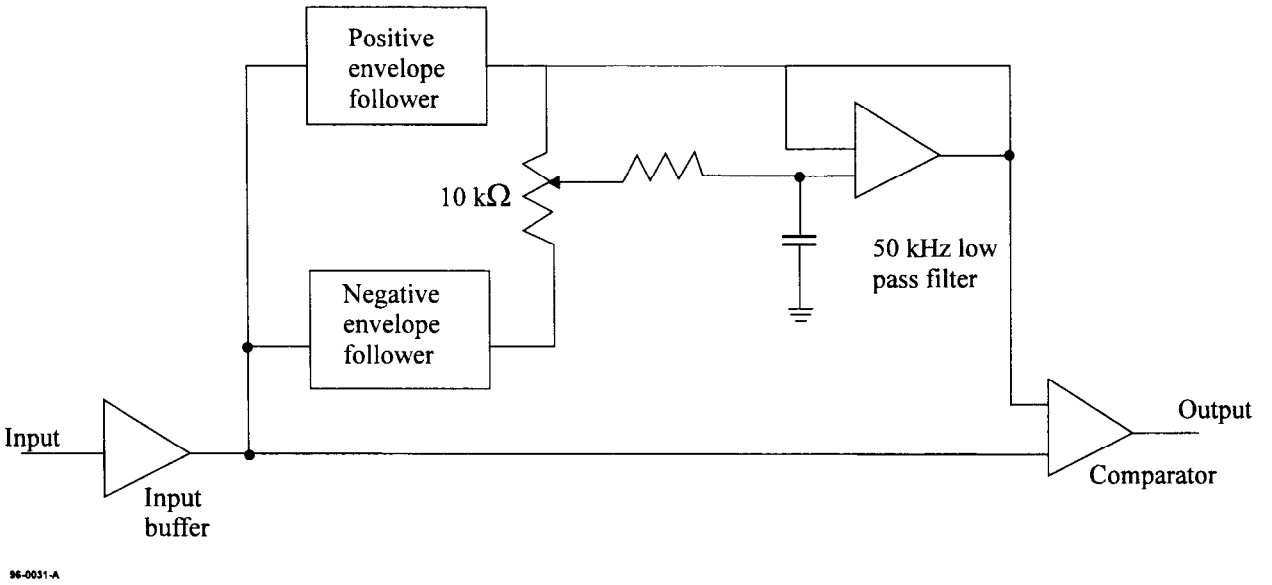

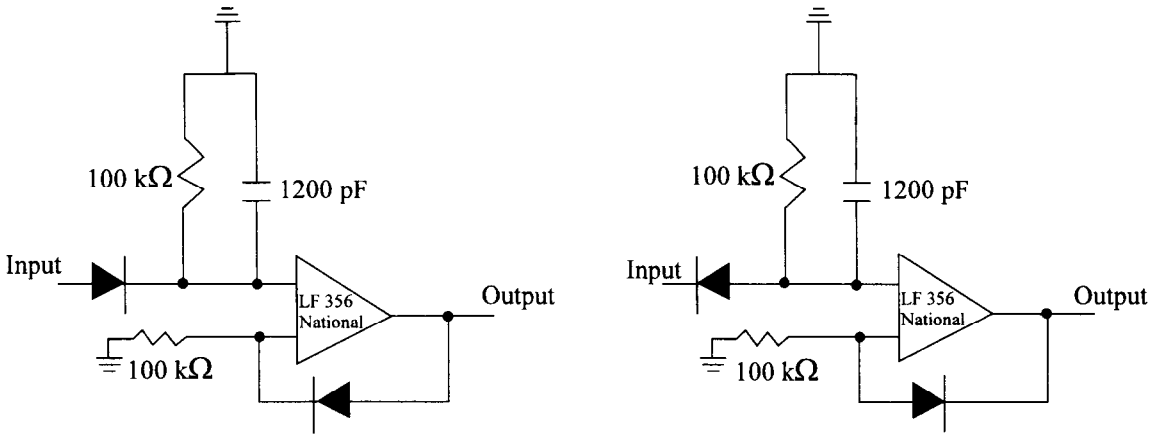

Example of a positive envelope follower
(half-wave rectifier)

Example of a negative envelope follower
(half-wave rectifier)

96-0042-A

Figure L.1 - Threshold Follower

Copyright International Organization for Standardization
Provided by IHS under license with ISO
No reproduction or networking permitted without license from IHS
Not for Resale

Annex M
(normative)

Requirements for interchange

M.1 Equipment for writing

The disk under test shall have been written with arbitrary data by a disk drive for data interchange use in the operating environment.

M.2 Test equipment for reading

M.2.1 General

The read test shall be performed on a test drive in the test environment. The rotational frequency of the disk when reading shall be as defined in 9.5.

The direction of rotation shall be as defined in 10.5.8.

M.2.2 Read Channel

M.2.2.1 Characteristics of the optical beam

The optical beam used for reading shall comply with the requirements of 9.2 b), c), d) and f).

M.2.2.2 Read power

The read power shall comply with the requirements of 9.3.

M.2.2.3 Optics

The optical head used for reading shall comply with the requirements of annex M.

M.2.2.4 Read amplifier

The read amplifier after the photo detector in Channels 1 shall have a flat response from d.c. to 28 MHz within ± 1 dB.

M.2.2.5 Analog to binary conversion

The signals from the read amplifier shall be converted from analog to binary. The converter for Channel 1 shall work properly for signals from pre-recorded marks with properties as defined in clause 27.

The converter for Channel 1 shall also work properly for signals from user-written marks with properties as defined in 17.3.

M.2.2.6 Binary-to-digital conversion

The binary signal shall be converted to a digital signal according to the rules of the recording code.

M.2.3 Tracking

The open-loop transfer function for the axial and radial tracking servo shall be

$$H = \frac{(2\pi f_0)^2}{cs^2} \left| \frac{1 + \frac{sc}{2\pi f_0}}{1 + \frac{s}{2\pi f_0 c}} \right|$$

where s = i2π*f*, within an accuracy such that $|1+H|$ not deviate more than ± 20% from its nominal value in a bandwidth from 50 Hz to 10 kHz.

The constant c shall be 3. The open-loop 0-dB frequency f_0 shall be 1 250 Hz for the axial servo and 1 740 Hz for the radial servo. The open-loop d.c. gain of the axial servo shall be at least 80 dB.

Copyright International Organization for Standardization
Provided by IHS under license with ISO
No reproduction or networking permitted without license from IHS Not for Resale

M.3 Requirements for the digital read signals

A byte error is defined by a byte in which one or more bits have a wrong setting, as detected by the error detection and correction circuit.

M.3.1 Any sector accepted as valid during the writing process shall not contain byte errors in Channel 2 after the error correction circuit.

M.3.2 Any sector not accepted as valid during the writing process shall have been rewritten according to the rules for defect management.

M.4 Requirements for the digital servo signals

The focus of the optical beam shall not jump tracks voluntarily.

M.5 Requirement for interchange

An interchanged optical disk cartridge meets the requirements for interchangeability if it meets the requirements of M.3 and M.4 when it is written on an interchange drive according to M.1 and read on a test drive according to M.2.

Copyright International Organization for Standardization
Provided by IHS under license with ISO
No reproduction or networking permitted without license from IHS
Not for Resale

Annex N
(normative)

Measurement implementation for Cross-track signal

The Cross-track signal shall be measured by using the implementation with the following characteristics.

Droop Rate:

$$\frac{\Delta I / I_{OL}}{\Delta t} = 0{,}1 - 0{,}2$$

Peak Trace Error (PTE):

$$\left| \frac{I_{PEAK} - I_{PH}}{I_{OL}} \right| \leq 0{,}05$$

where:

I_{PH} Peak-hold signal at the peak position

I_{Peak} Channel 1 signal at the peak position

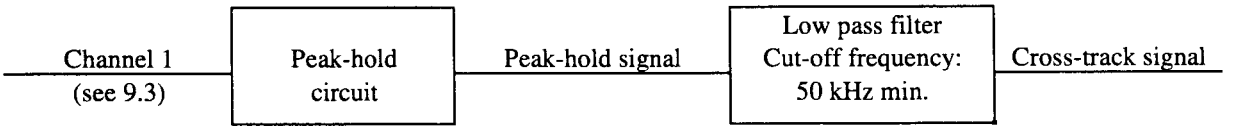

Figure N.1 - Measurement implementation for Cross-track signal

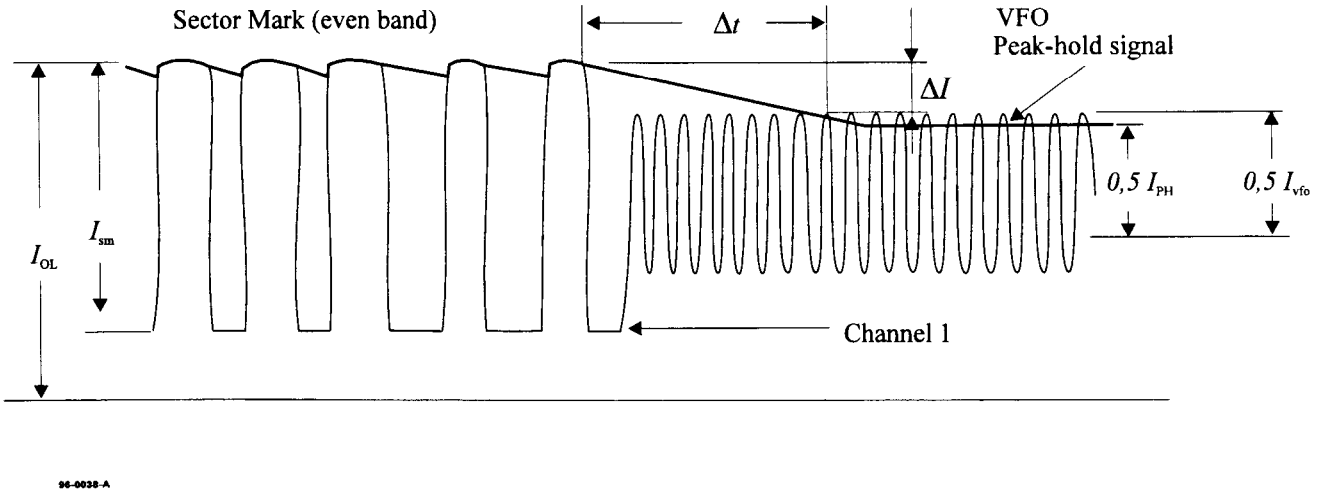

Figure N.2 - Illustration of the various parameters for peak-hold characteristics

Copyright International Organization for Standardization
Provided by IHS under license with ISO
No reproduction or networking permitted without license from IHS
Not for Resale

Annex P
(informative)

Values to be implemented in existing and future standards

This International Standard specifies values for bytes which identify optical disk cartridges which conform to this International Standard. It is expected that other types of optical disk cartridges will be developed in future. It is therefore recommended that the following values be used for these other cartridges.

P.1 Byte 0 of the Control Track PEP Zone

Setting of bits 6 to 4 have the indicated meanings:

000	Constant Angular Velocity (CAV)
001	Constant Linear Velocity (CLV)
010	Zoned Constant Angular Velocity (ZCAV)
011	Zoned Constant Linear Velocity (ZCLV)
110	Logical Zoned Constant Angular Velocity (Logical ZCAV)

P.2 Byte 7 of the Control Track PEP Zone

The following bit patterns have the indicated meanings.

0000 0000	Read-only ODCs (ROM)
0001 0000	Write Once Read Many ODCs using irreversible recording effects.
0001 0001	WO ODC using MO recording
0010 0000	Rewritable ODCs using MO recording
0101 0001	WO ODCs using exchange coupled Direct Over Write (DOW)
0110 0000	Rewritable ODCs using exchange coupled DOW
0011 0000	Rewritable ODCs of the type phase change
1001 0000	Partial ROM of Write once ODCs
1010 0000	Partial ROM of MO
1011 0000	Partial ROM of phase change

Note that when the most significant bit is set to ONE, this indicates a partial ROM.

See also 17.3.2.1.4.

Copyright International Organization for Standardization
Provided by IHS under license with ISO
No reproduction or networking permitted without license from IHS Not for Resale

Annex Q
(informative)

Office environment

Q.1 Air cleanliness

Due to their construction and mode of operation, optical disk cartridges have considerable resistance to the effects of dust particles around and inside the disk drive. Consequently it is not generally necessary to take special precautions to maintain a sufficiently low concentration of dust particles.

Operation in heavy concentrations of dust should be avoided e.g. in a machine shop or on a building site.

Office environment implies an environment in which personnel may spend a full working day without protection and without suffering temporary or permanent discomfort.

Q.2 Effects of operation

In the office environment (as well as other environments) it is possible for an optical disk drive to degrade the quality of written marks if the read power is applied to a single track for a long period of time. This would happen if a media in a drive remains loaded , the drive remains in the ready status, and is in jump-back mode on one particular track. If this occurs at the maximum operating temperature (55°C) the marks on the media may be degraded. The media manufacturer's selection of the value for the maximum read powers allowed in the User Zone as well as the optical drive manufacturer's read power management method should reflect this possibility and be designed to minimize any risk to data integrity.

Copyright International Organization for Standardization
Provided by IHS under license with ISO
No reproduction or networking permitted without license from IHS Not for Resale

Annex R
(informative)

Derivation of the operating climatic environment

This annex gives some background on how some of the conditions of the operating environment in 8.1.2 have been derived.

R.1 Standard climatic environment classes

The conditions of the ODC operating environment are, with a few exceptions mentioned below, based on parameter values of the IEC standard climatic environment class 3K3 described in IEC publication 721-3-3. This publication defines environmental classes for stationary use of equipment at weather-protected locations.

The IEC class 3K3 refers to climatic conditions which

"... may be found in normal living or working areas, e.g. living rooms , rooms for general use (theatres restaurants etc.), offices, shops, workshops for electronic assemblies and other electrotechnical products, telecommunication centres, storage rooms for valuable and sensitive products."

R.2 Overtemperature considerations

While IEC class 3K3 defines the limits for the room climate only, the ODC operating environment specification in this International Standard takes into consideration also system and drive overtemperature. This means that when inserted in a drive, the ODC will sense a temperature which is above the ambient room temperature. The figures in the operating environment specification have been calculated from the assumption that overtemperature may be up to 20°C.

R.3 Absolute humidity

The introduction of the parameter

absolute humidity (unit : g water / m^3 of air)

is very useful when studying overtemperature. When the temperature rises inside a drive, the relative humidity goes down but the absolute humidity remains substantially constant. So, making room for overtemperature in the operating environment specification affects not only the upper temperature limit but also the lower relative humidity limit. The relationship between these parameters is shown in the climatogram (the relative humidity vs. temperature map) of the ODC operating environment, figure R.1.

The absolute humidity restrictions influence the operating environment in the following two ways:

i. Combination of high temperatures and high relative humidities are excluded. Such combinations could have negative influence on the performance and the life of ODCs.

ii. Combinations of low temperatures and low relative humidities are excluded. Such combinations are very unlikely to occur in worldwide normal office environments.

R.4 Deviations from the IEC standard environment class

Apart from the change introduced by the overtemperature considerations above, there are a few more parameter values which are not based on IEC class 3K3. These are:

- Atmospheric pressure

  The IEC 3K3 lower limit of 70 kPa has been extended to 60 kPa. ODCs according to this International Standard show no intrinsic pressure sensitivity and 70 kPa excludes some possible markets for ODCs.

- Absolute humidity

  The IEC 3K3 value for the upper limit of 25 g/m^3 has been raised to 30 g/m^3 in view of some expected operation in portable devices outside the controlled office environment.

Copyright International Organization for Standardization
Provided by IHS under license with ISO
No reproduction or networking permitted without license from IHS Not for Resale

- Temperature

  The maximum temperature around the ODC, i.e. room temperature plus overtemperature, has been limited to 55 °C (while IEC 3K3 + 20 °C would have become 60 °C).For ODCs according to this International Standard, however, the 55°C limit is considered to be a physical limit above which operation (as well as storage) is not safe.

  This means that equipment designers may want to ensure adequate cooling inside the drive especially when the room temperature approaches the upper IEC 3K3 limit of 40°C.

- Further

  The rates of change (the gradients) of temperature and relative humidity are not according to IEC 3K3.

R.5 Wet bulb temperature specifications

Instead of specifying limits for the absolute humidity, some of the earlier standards for ODCs as well as those for other digital data storage media often use restrictions of the parameter

wet bulb temperature (unit: °C)

in order to avoid too severe combinations of high temperatures and high relative humidities.

In order to facilitate comparisons between different specifications, figure R.2 and table R.1 show wet bulb temperatures of interest for the ODC operating environment, as well as for the testing and storage environments Since wet bulb temperatures vary slightly with the atmospheric pressure, the diagram is valid for the normal pressure of 101,3 kPa only.

Copyright International Organization for Standardization
Provided by IHS under license with ISO
No reproduction or networking permitted without license from IHS Not for Resale

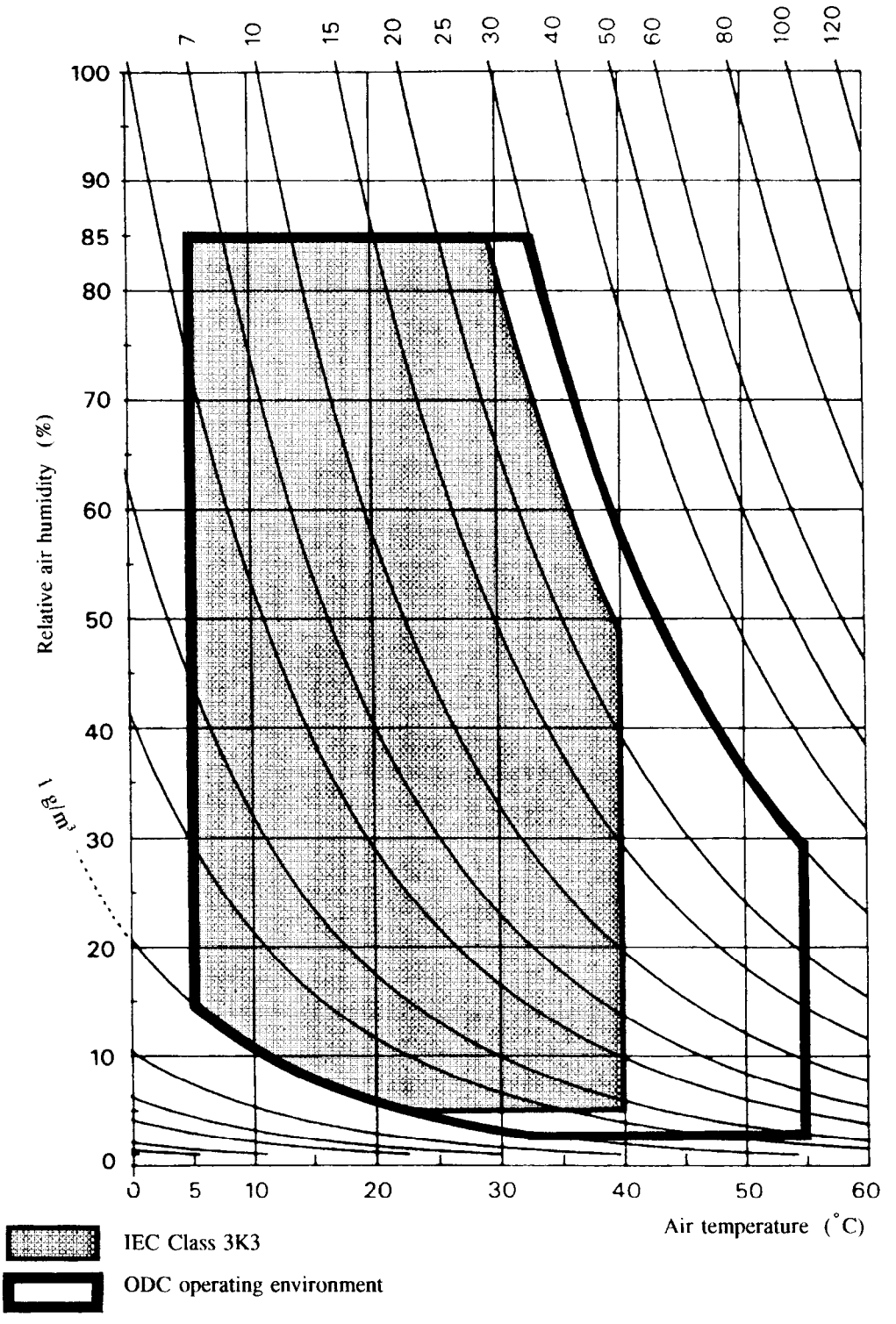

Figure R.1 - Climatogram of IEC Class 3K3 and the ODC operating environment

Copyright International Organization for Standardization
Provided by IHS under license with ISO
No reproduction or networking permitted without license from IHS
Not for Resale

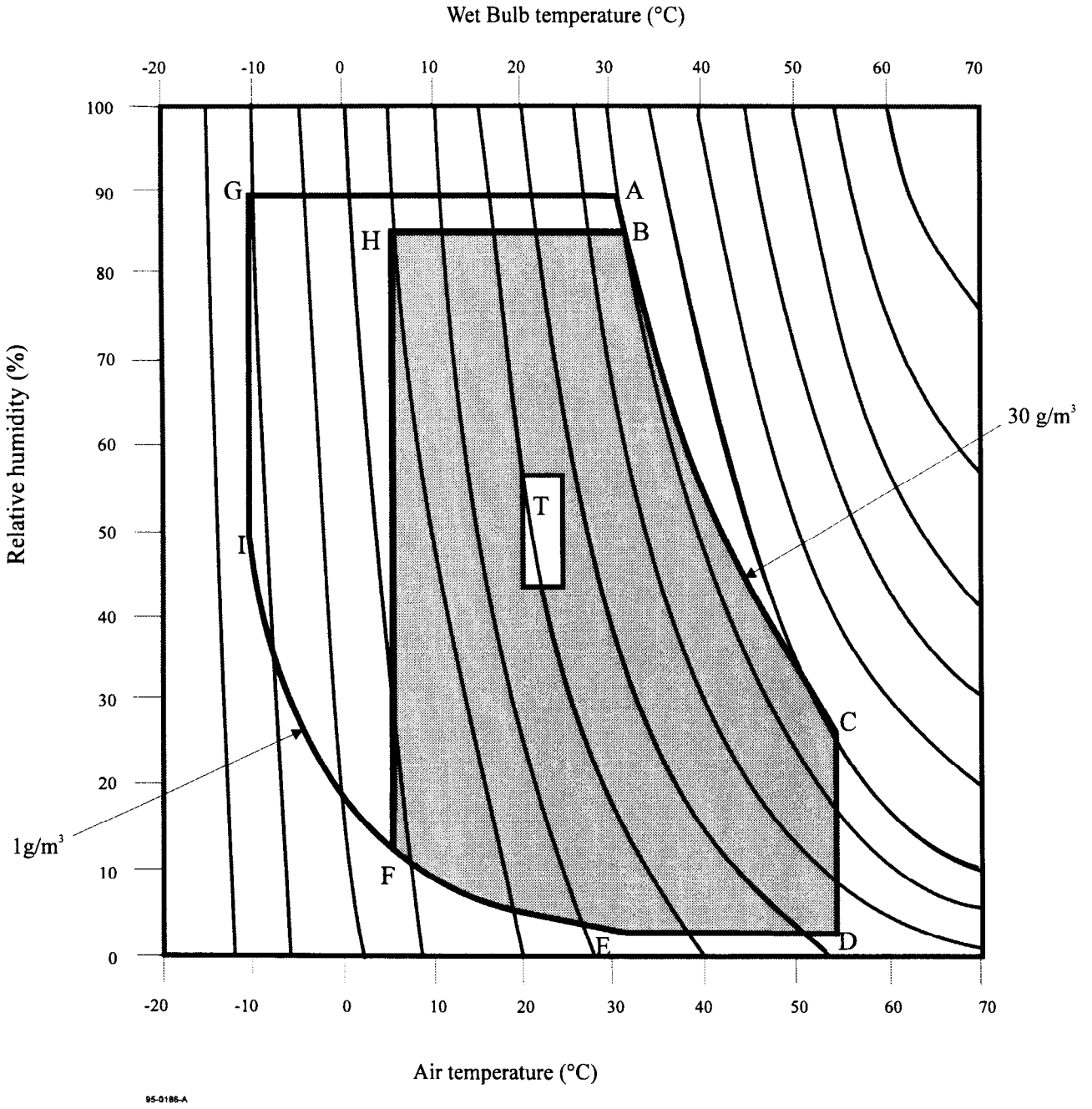

Figure R.2 - Wet bulb temperatures of the operating and storage environments

The positions of points A to I and of area T are specified in table R.1.

Copyright International Organization for Standardization
Provided by IHS under license with ISO
No reproduction or networking permitted without license from IHS
Not for Resale

Table R.1 - Position of the main points in figure R.2

Position	Air temperature	Relative humidity	Wet bulb temperature
A	31,7 °C	90,0 %	30,3 °C
B	32,8 °C	85,0 %	30,6 °C
C	55,0 °C	28,8 %	35,5 °C
D	55,0 °C	3,0 %	21,9 °C
E	31,7 °C	3,0 %	12,1 °C
F	5,0 °C	14,6 %	-1,4 °C
G	-10,0 °C	90,0 %	-10,3 °C
H	5,0 °C	85,0 %	4,0 °C
I	-10,0 °C	46,9 %	-11,8 °C
Test environment (T)	23,0 °C ± 2,0 °C	50,0 % ± 5,0 %	--------
Storage environment	is determined by A-B-C-D-E-F-I-G		
Operating environment	is determined by B-C-D-E-F-H		

Copyright International Organization for Standardization
Provided by IHS under license with ISO
No reproduction or networking permitted without license from IHS
Not for Resale

Annex S
(informative)

Transportation

S.1 General

As transportation occurs under a wide range of temperature and humidity variations, for differing periods, by many methods of transport and in all parts of the world it is not possible to specify conditions for transportation or for packaging.

S.2 Packaging

The form of packaging should be agreed between sender and recipient or, in the absence of such agreement, is the responsibility of the sender. It should take account of the following hazards.

S.2.1 Temperature and humidity

Insulation and wrapping should be designed to maintain the conditions for storage over the estimated period of transportation.

S.2.2 Impact loads and vibration

Avoid mechanical loads that would distort the shape of the cartridge.

Avoid dropping the cartridge.

Cartridges should be packed in a rigid box containing adequate shock absorbent material.

The final box should have a clean interior and a construction that provide sealing to prevent the ingress of dirt and moisture.

Copyright International Organization for Standardization
Provided by IHS under license with ISO
No reproduction or networking permitted without license from IHS
Not for Resale

Annex T
(informative)

Sector retirement guidelines

This International Standard assumes that up to 10 000 sectors may be replaced in any of the following cases:

- A sector does not have at least one reliable ID field.
- Only one of the two ID fields in one sector is reliable, and the current sector number is contradictory to the one anticipated by the preceding sectors.
- A single defect of more than 30 bytes in a 1 024-byte sector is detected.
- The total number of defective bytes exceeds 40 bytes in a 1 024-byte sector, or 5 bytes in one ECC interleave of a 1 024-byte sector

Copyright International Organization for Standardization
Provided by IHS under license with ISO
No reproduction or networking permitted without license from IHS Not for Resale

Annex U
(informative)

Track deviation measurement

The deviation of a track from its nominal location is measured in the same way as a drive sees a track, i.e. through a tracking servo. The strength of the Reference Servo used for the test is in general less that the strength of the same servo in a normal drive. The difference in strength is intended for margins in the drive. The deviation of the track is related to the tracking error between the track and the focus of the optical beam, remaining after the Reference Servo. The tracking error directly influences the performance of the drive, and is the best criterion for testing track deviations.

The specification of the axial and radial deviations can be described in the same terms. Therefore, this annex applies to both axial and radial track deviations.

U.1 Relation between requirements

The acceleration required by the motor of the tracking servo to make the focus of the optical beam follow the tracks on the disk (see 11.4.6 and 11.4.8) is a measure for the allowed deviations of the tracks. An additional measure is the allowed tracking error between the focus and the track (see 20.2.4). The relation between both is given in figure U.1 where the maximum allowed amplitude of a sinusoidal track deviation is given as a function of the frequency of the deviation. It is assumed in the figure that there is only one sinusoidal deviation present at a time.

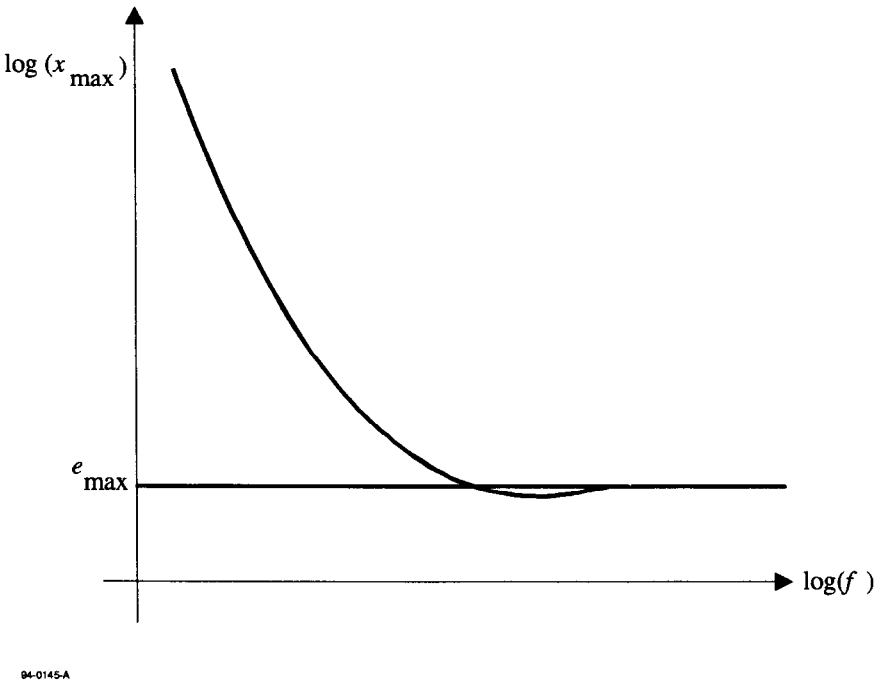

Figure U.1 Maximum allowed amplitude of a single , sinusoidal track deviation

At low frequencies the maximum allowed amplitude x_{max} is given by

$$x_{max} = a_{max} / (2\pi f)^2, \quad (1)$$

where a_{max} is the maximum acceleration of the servo motor.

At high frequencies the maximum allowed amplitude x_{max} is given by

$$x_{max} = e_{max} \quad (2)$$

Copyright International Organization for Standardization
Provided by IHS under license with ISO
No reproduction or networking permitted without license from IHS Not for Resale

where e_{max} is the maximum allowed tracking error. The connection between both frequency regions is given in U.3.

U.2 Reference Servo

The above restrictions of the track deviations is equal to the restriction of the track deviations for a Reference Servo. A Reference Servo has a well-defined transfer function, and reduces a single, sinusoidal track deviation with amplitude x_{max} to a tracking error e_{max} as in figure U.1.

The open-loop transfer function of the Reference Servo shall be

$$H_s(i\omega) = \frac{1}{c}\left(\frac{\omega_0}{i\omega}\right)^2 \frac{1+\frac{i\omega c}{\omega_0}}{1+\frac{i\omega}{c\omega_0}} \qquad (3)$$

where $i = \sqrt{-1}$, $\omega = 2\pi f$ and $\omega_0 = 2\pi f_0$, with f_0 the 0 dB frequency of the open-loop transfer function. The constant c gives the cross-over frequencies of the lead-lag network of the servo: the lead break frequency $(f_1 - f_2)/c$ and the lag break frequency $(f_2 - f_0) \times c$. The reduction of a track deviation x to a tracking error e by the Reference Servo is given by

$$\frac{e}{x} = \frac{1}{1+H_s} \qquad (4)$$

If the 0 dB frequency is specified as

$$\omega_0 = \sqrt{\frac{a_{max}\, c}{e_{max}}} \qquad (5)$$

then a low-frequency track deviation with an acceleration a_{max} will be reduced to a tracking error e_{max}, and a high frequency track deviation will not be reduced. The curve in figure T.1 is given by

$$x_{max} = e_{max} |1+H_s| \qquad (6)$$

The maximum acceleration required from the motor of this Reference Servo is

$$a_{max}(motor) = e_{max}\, \omega^2 |1+H_s|. \qquad (7)$$

At low frequencies $f < f_0 / c$ applies

$$a_{max}(motor) = a_{max}(track) = \frac{(\omega_0)^2 e_{max}}{c} \qquad (8)$$

Hence, it is permitted to use $a_{max}(\text{motor})$ as specified for low frequencies in 11.4.6 and 11.4.8 for the calculation of ω_0 of a Reference Servo.

U.3 Requirement for track deviations

The track deviations shall be such that, when tracking with a Reference Servo on a disk rotating at the specified frequency, the tracking error shall not be larger than e_{max} during more than 7,2 µs.

The open-loop transfer function of the Reference Servo for axial and radial tracking shall be given by equation (3) within an accuracy such that $|1+H|$ does not differ by more than ± 20% from its nominal value in a bandwidth from 50 Hz to 170 kHz. The constant c shall be 3. The 0 dB frequency $\frac{\omega_0}{2\pi}$ shall be given by equation (5), where a_{max} and e_{max} for axial and radial tracking are specified in 20.2.4. 11.4.6 and 11.4.8.

U.4 Measurement implementation

Three possible implementations for an axial or radial measurement system have been given below. H_a is the open-loop transfer function of the actual tracking servo of the drive. H_S is the transfer function for the Reference Servo as given in equation (3). x

Copyright International Organization for Standardization
Provided by IHS under license with ISO
No reproduction or networking permitted without license from IHS Not for Resale

and y are the position of the track and the focus of the optical beam. e_S is the tracking error after a Reference Servo, the signal of which has to be checked according to the previous paragraph.

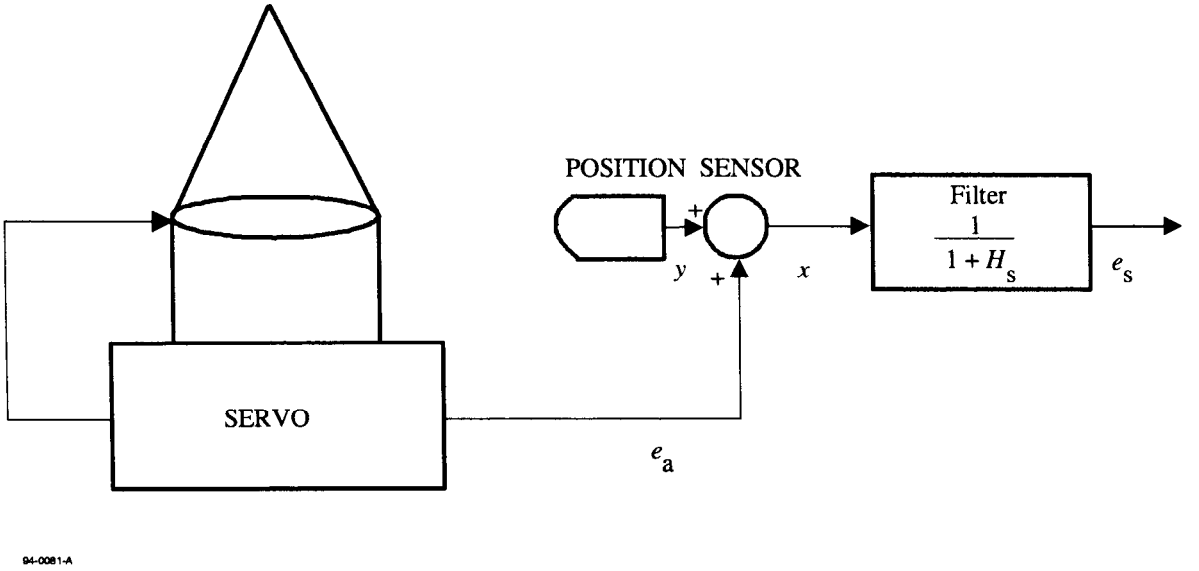

Figure U.2 - Implementation of a Reference Servo by filtering the track position signal with the reduction characteristics of the reference servo

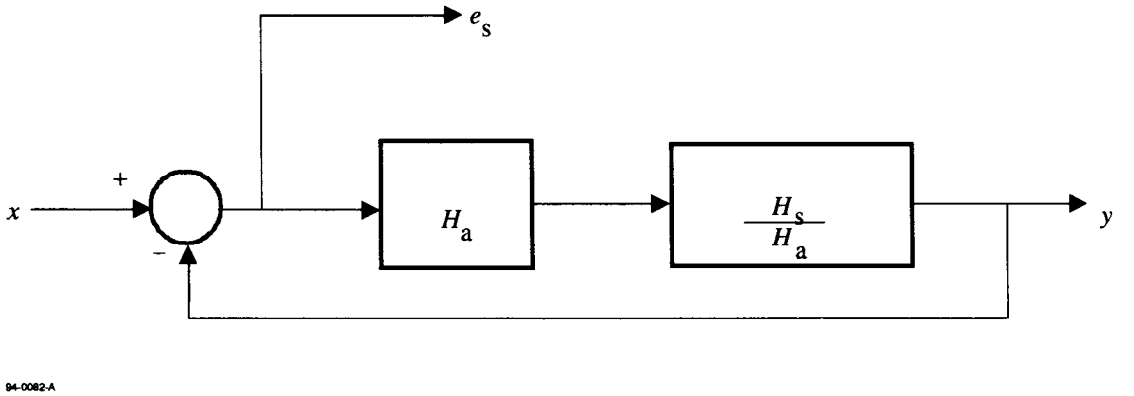

Figure U.3 - Implementation of a Reference Servo by changing the transfer function of the actual servo

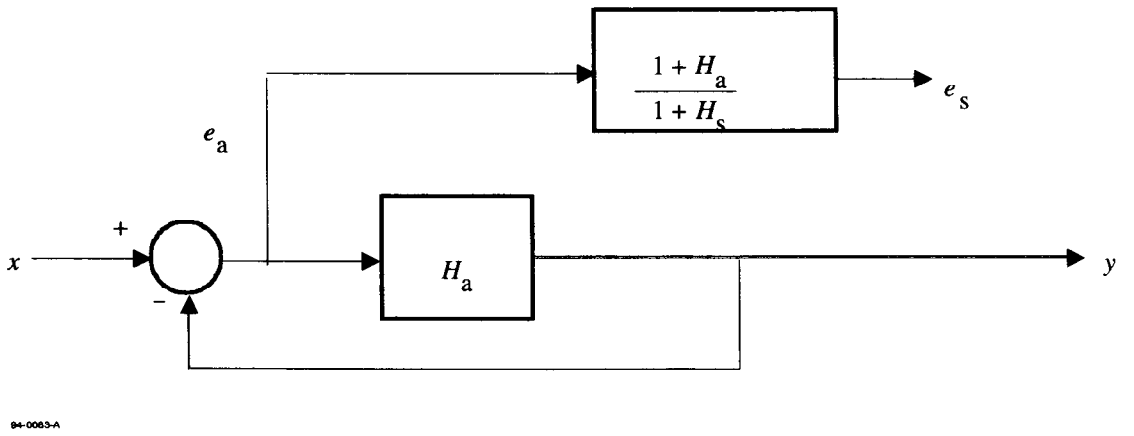

Figure U.4 - Implementation of a Reference Servo by changing the tracking error of the actual servo

Copyright International Organization for Standardization
Provided by IHS under license with ISO
No reproduction or networking permitted without license from IHS
Not for Resale

The optimum implementation depends on the characteristics H_a and H_s. Good results for motors in leaf springs are often obtained by using separate circuits in a low and high frequency Channel. The implementation of figure U.2 is used in the low-frequency Channel, while that of figures U.3 or U.4 is used in the high-frequency Channel. The signals from both Channels are added with a reversed cross-over filter to get the required tracking error. In the low-frequency Channel one can also use the current through the motor as a measure of the acceleration of the motor, provided the latter is free from hysteresis. The current must be corrected for the transfer function of the motor and then be converted to a tracking error with a filter with a transfer function $\frac{e}{a} = \frac{e}{x\omega^2}$ derived from equation (4).

Copyright International Organization for Standardization
Provided by IHS under license with ISO
No reproduction or networking permitted without license from IHS
Not for Resale

Annex V
(informative)

Measure of the vertical birefringence of the substrate

This annex describes a non-contact measurement method for optical disk substrate birefringence which applies to both uncoated substrates and to disks coated with thin films. This technique will yield average or bulk values of both *in-plane birefringence* (IPB) and *vertical birefringence* (VB) with one procedure. The method uses a slighty modified variable angle spectroscopic ellipsometer (VASE), although the variable wavelength capability is unnecessary for a simple characterization at the operating point of this Standard. The method assumes the principal optical axes of the substrate align with the polar r, ϕ, and z directions of the disk, which is valid for injection molded plastic disks. Finally, the method described also assumes that the contribution of the optical ellipticity of the coated film(s) to the measured optical retardation is negligible compared to the contribution of the substrate material.

An ellipsometric measurement of the phase retardation between orthogonal polarization states for a range of incident angles is made to uniquely determine the substrate refractive indices for the three principal directions (N_r, N_ϕ, N_z). This range of incident angles should be restricted only to limitations of the apparatus on the low angle side, and beam walk off on the high angle side. Angles ranging from -70° to +70° are recommended. Three angles would generally be the minimum necessary to establish VB.

When measuring a film-coated disk, the incident beam will reflect off both the top surface of the disk and the active layers (see figure V.1). Since the substrate is relatively thin (~ 1,2 mm), both of these reflections can enter the detector. To eliminate the undesirable top surface reflected beam, a simple beam stop is employed, and no disk contact is made. This small blocking element consists of a thin (< 0,5 mm) but stiff opaque strip which is inserted at the reflection point of the incident beam and which is in close proximity with the top of the disk. Adjust the position of the strip to achieve maximum reflected signal at the point of reflection. In this situation, the top surface reflection is blocked and only the bottom reflection off the internal surface (thin film surface) is allowed to pass to the polarization detector (see figure V.1). (CAUTION: If the strip is moved too close to the incident source, the main beam is blocked and the signal drops. If the strip is moved too far from the reflection point, both reflections are blocked and again the signal drops).

For clear substrates, the VASE can be used in the straight-through mode and the measurements made in transmission and again no contact is required.

For a disk with the principal optical axes aligned with the cylindrical coordinates of the disk (which is almost universally the case), the following equation expresses the retardation as a function of angle of incidence to the indices of the disk: N_r, N_Φ, N_z. The retardation data is regression fit to the equation below, and the indices are determined as free parameters.

$$\Delta = d \times \left(\sqrt{N_r^2 - \sin^2(\theta)} - \frac{N_\Phi}{N_z} \sqrt{N_z^2 - \sin^2(\theta)} \right)$$

where Δ is the retardation and d is the thickness of the substrate. The IPB and VB are the differences between the indices

IPB: $\Delta N_{in} = N_r - N_\Phi$

VB: $\Delta N_{vert} = 0{,}5\ (N_r + N_\Phi) - N_z$

The dimensionless birefringence can be expressed in length units by multiplying ΔN_{in} or ΔN_{vert} by the substrate thickness d. In this case, the birefringence is expressed as nm of retardation.

Copyright International Organization for Standardization
Provided by IHS under license with ISO
No reproduction or networking permitted without license from IHS Not for Resale

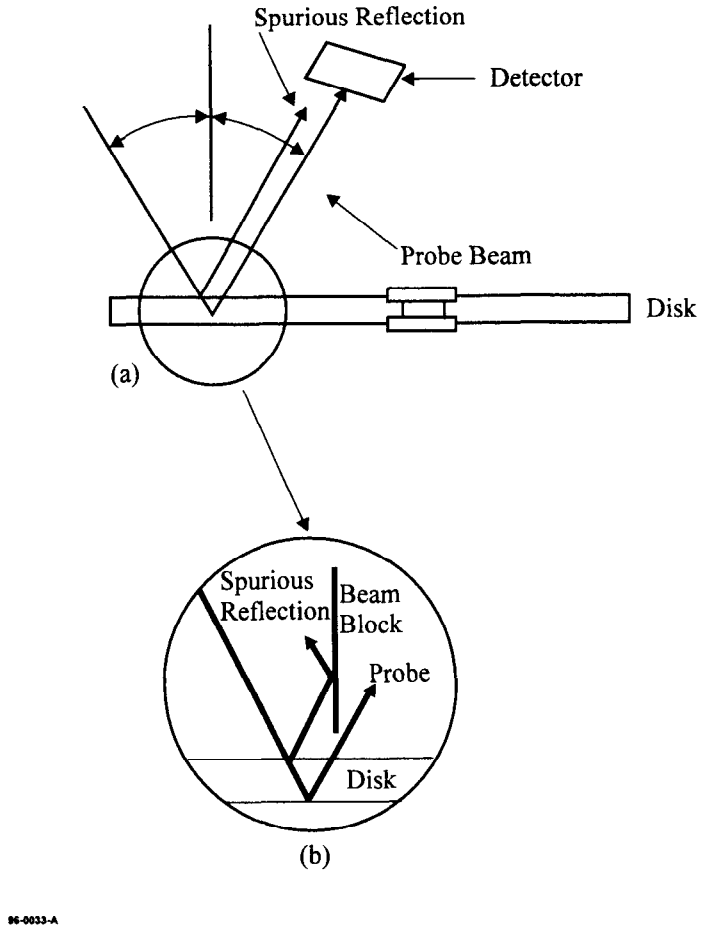

Figure V.1 - (a) Origin of spurious reflection. (b) Non-contact beam blocking technique for eliminating spurious reflection.

Copyright International Organization for Standardization
Provided by IHS under license with ISO
No reproduction or networking permitted without license from IHS
Not for Resale

Annex W
(informative)

Laser Power Calibration for evaluation of media power sensitivity

W.1 Variance of testing condition

For measurement of media power sensitivity, laser power of the media tester should be calibrated carefully since the values of the media power sensitivity *C* are easily affected by the various variation allowed for Reference drive. The laser spot profile on the magnetic layer varies with optical variation allowed for Reference drive specified in clause 9.2. Table W.1 shows the best and the worst conditions allowed for Reference drive from the point of view of the write power sensitivity. The peak temperature for the worst condition is estimated to decrease by 21 % from that for the best condition. Therefore media power sensitivity *C* should be carefully evaluated.

Table W.1 - The best and worst conditions allowed for Reference drive

	Best condition	Worst condition
λ	675 nm	695 nm
λ/NA	1,227 µm	1,263 µm
D/W	0,8	0,9
Variance of wave front		
Optical head	0	$\lambda^2/330$
Disk tilt	0	3,2 mrad
Variation of substrate thickness	0	50 µm

W.2 Power calibration

Laser power calibration of the tester should be done in the following scheme. Use of a high speed front power monitor is recommended for precise calibration.

Step 1 : Calibrate high-speed front monitor by power meter (figure W.1).

- The calibration can be done in a d.c. laser operation with a d.c. power meter.
- For the purpose of observing the write pulse shape during writing, high speed (> 100 MHz) front power monitor is recommended.

Copyright International Organization for Standardization
Provided by IHS under license with ISO
No reproduction or networking permitted without license from IHS Not for Resale

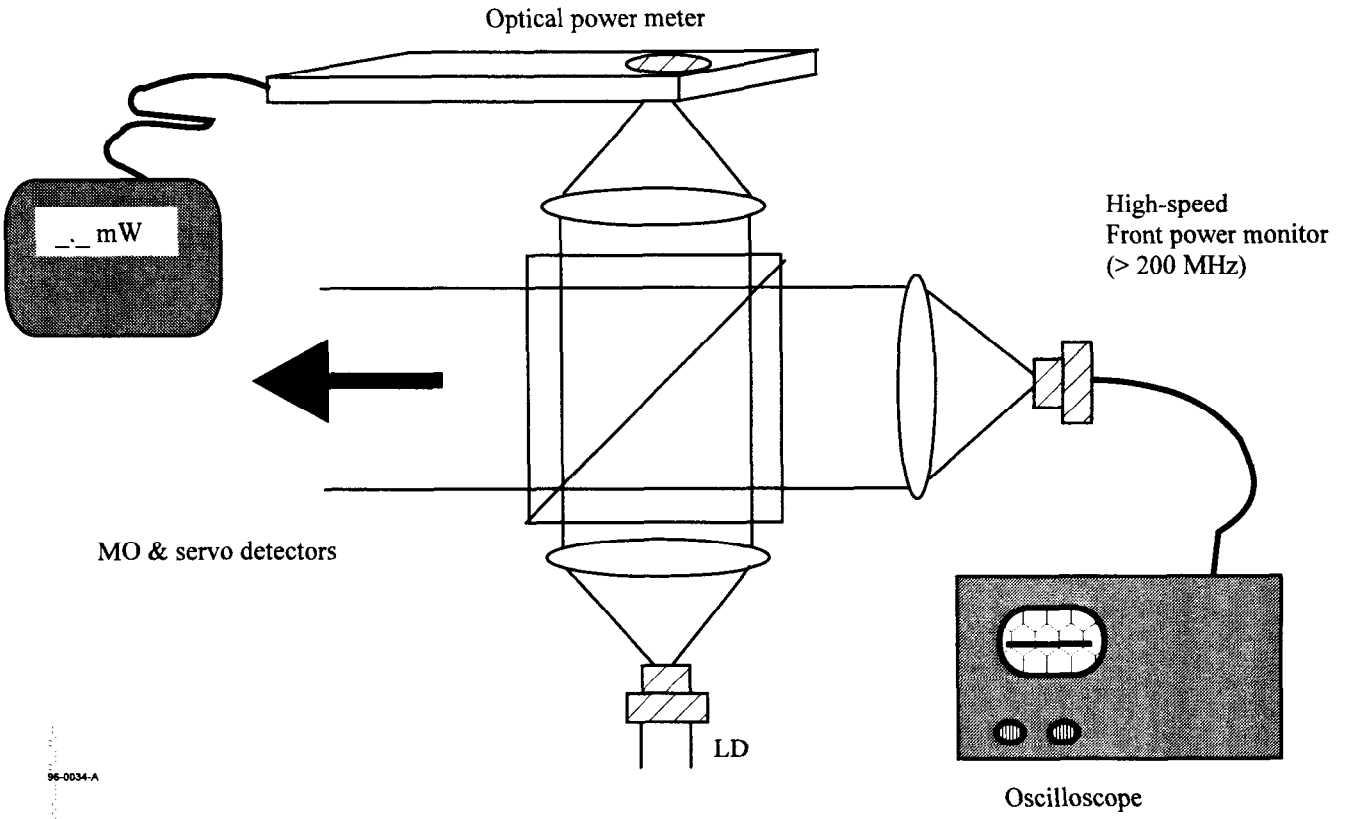

Figure W.1 - Calibration of front power monitor

Step 2 : Directly observe the write pulse shape during writing (figure W.2).

- Pulse power in focused condition is different from that in un-focused condition because of the self coupled effect of the laser diode.
- Pulse power, pulse duration, and bias power level should be carefully observed in real testing condition.
- Check if shapes of three kinds of pulses, which is isolated pulses for 2T marks and two 2T spaced pulses for 4T marks, are completely identical. If not, significant error will appear in the measurement of C and E_{th}.

Copyright International Organization for Standardization
Provided by IHS under license with ISO
No reproduction or networking permitted without license from IHS
Not for Resale

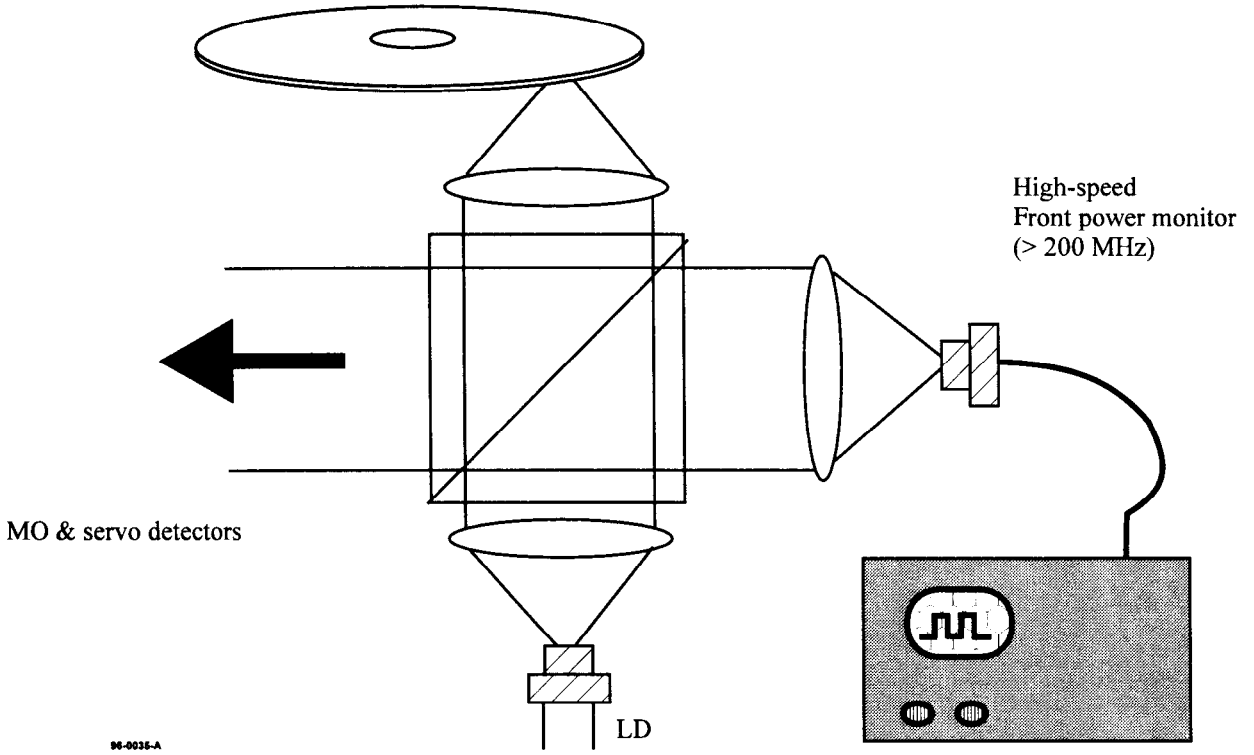

Figure W.2 - Measurement of pulse power and pulse width

Step 3 : Measure write pulse power and pulse width with appropriate filters.

- Ringing can be removed by a (Gaussian) low pass filter with a cut-off frequency of 80 MHz (figure W.3 (a))
- For precise pulse energy measurement, average power level measurement is recommended unless high speed front monitor is available (figure W.3 (b)).

Notes for measurement:

Bias power level

Bias power level P_b should be measured carefully (with an accuracy of ±0,05 mW) because error in the P_b measurement may result in a significant error in measured C-value.

Disk temperature

Disk temperature should be kept at 25 °C ± 1 °C. Internal temperature may rise if the tester lid is closed.

Stray light

The stray light within the optical head may enter the objective lens and form a stray beam spot. Even if the temperature increase in the optical beam spot is small, the measurement for the light power through the objective lens may large.

Contamination of optical components (especially the objective lens)

If the light is absorbed by dust or other debris, the light power through the objective lens decreases. This can be measured by the power meter and does not, therefore, result in any complications. If the light is diverted instead of being absorbed, however, not all of the light power through the objective lens is valid for the temperature-up of the media; therefore, variance results. Frequent cleaning is required.

Beam spot size

On ahead of measurement of media power sensitivity, the beam profile of the tester should be checked by optical knife edge profiler. Unless the measured spot diameter is far from 1,08 μm, which is the best diameter for Reference drive, the above conditions such as disk tilt should be carefully adjusted.

Copyright International Organization for Standardization
Provided by IHS under license with ISO
No reproduction or networking permitted without license from IHS Not for Resale

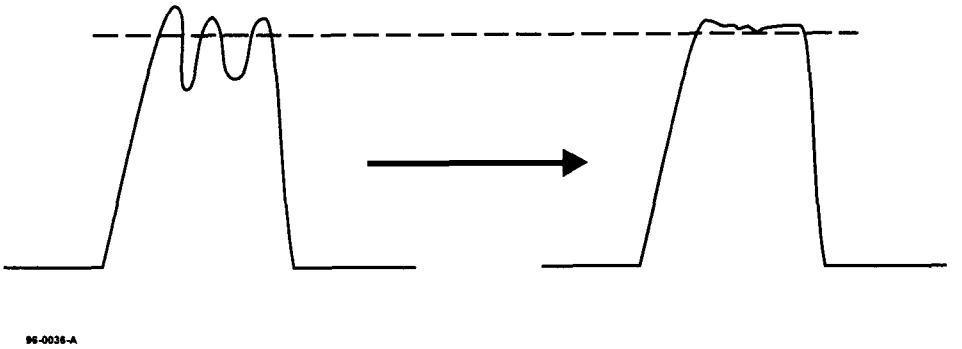

Figure W.3a - Elimination of ringing by LPF (~ 100 MHz)

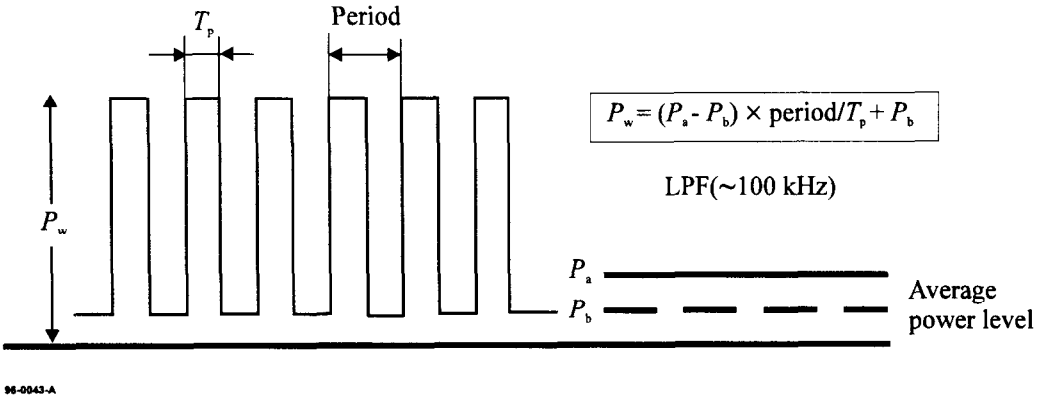

Figure W.3 - Precise determination of the pulse power from the average power level

Copyright International Organization for Standardization
Provided by IHS under license with ISO
No reproduction or networking permitted without license from IHS
Not for Resale

© ISO/IEC

ICS 35.220.30

Descriptors: data processing, information interchange, data recording, data recording devices, optical disks, CD-WORM, optical disk cartridges, specifications, dimensions, physical properties, mechanical properties, optical properties, information formats, track formats, interchangeability.

Price based on 117 pages

Copyright International Organization for Standardization
Provided by IHS under license with ISO
No reproduction or networking permitted without license from IHS

Not for Resale