INTERNATIONAL STANDARD

ISO/IEC 15485

First edition
1997-12-15

Information technology — Data interchange on 120 mm optical disk cartridges using phase change PD format — Capacity: 650 Mbytes per cartridge

Technologies de l'information — Échange de données sur cartouches de disque optique de 120 mm *de diamètre utilisant un format PD de changement de phase — Capacité:* 650 Mbytes *par cartouche*



Reference number
ISO/IEC 15485:1997(E)

Copyright International Organization for Standardization
Provided by IHS under license with ISO
No reproduction or networking permitted without license from IHS

Not for Resale

Contents

Section 1 - General 1

1 Scope 1

2 Conformance 1

2.1 Optical disk cartridge 1
2.2 Generating system 1
2.3 Receiving system 1
2.4 Compatibility statement 1

3 Normative reference 1

4 Definitions 2

4.1 addressable track 2
4.2 band 2
4.3 case 2
4.4 Channel bit 2
4.5 Clamping Zone 2
4.6 control track 2
4.7 Cyclic Redundancy Check (CRC) 2
4.8 defect management 2
4.9 disk reference plane 2
4.10 embossed mark 2
4.11 entrance surface 2
4.12 Error Correction Code (ECC) 2
4.13 field 2
4.14 format 2
4.15 interleaving 2
4.16 land and groove 2
4.17 mark 2
4.18 one-beam overwrite 2
4.19 optical disk 2
4.20 optical disk cartridge (ODC) 2
4.21 phase change (PC) 2
4.22 physical track 2
4.23 pitch 2
4.24 polarization 2
4.25 read power 3
4.26 recording layer 3
4.27 Reed-Solomon code 3
4.28 rewritable disk 3
4.29 sector 3

© ISO/IEC 1997
All rights reserved. Unless otherwise specified, no part of this publication may be reproduced or utilized in any form or by any means, electronic or mechanical, including photocopying and microfilm, without permission in writing from the publisher.
ISO/IEC Copyright Office • Case Postale 56 • CH-1211 Genève 20 • Switzerland
Printed in Switzerland

Copyright International Organization for Standardization
Provided by IHS under license with ISO
No reproduction or networking permitted without license from IHS Not for Resale

4.30 spindle 3
4.31 substrate 3
4.32 write once disk 3
4.33 ZCAV 3
4.34 zone 3

5 Conventions and notations 3

5.1 Representation of numbers 3
5.2 Names 3

6 List of acronyms 4

7 General description of the optical disk cartridge 4

8 General requirements 4

8.1 Environments 4

8.1.1 Test environment 4
8.1.2 Operating environment 5
8.1.3 Storage environment 5
8.1.4 Transportation 5

8.2 Temperature shock 5
8.3 Safety requirements 5
8.4 Flammability 5

9 Reference Drive 5

9.1 Optical system 5
9.2 Optical beam 6
9.3 Read channel 6
9.4 Tracking 7
9.5 Rotation of the disk 7

Section 2 - Mechanical and physical characteristics 7

10 Dimensional and physical characteristics of the case 7

10.1 General description of the case 7
10.2 Reference planes of the case 7
10.3 Dimensions of the case 7

10.3.1 Overall dimensions 7
10.3.2 Location hole 8
10.3.3 Alignment hole 8
10.3.4 Reference surfaces 9
10.3.5 Detents 9
10.3.6 Write inhibit hole 10
10.3.7 Media sensor area 10
10.3.8 Spindle and head windows 11
10.3.9 Shutter and shutter opener 11
10.3.10 Mis-insertion protection 12
10.3.11 Gripper slots 13
10.3.12 Label area 13

10.4 Mechanical characteristics 13

10.4.1 Material 14
10.4.2 Mass 14
10.4.3 Edge distortion 14
10.4.4 Compliance 14

Copyright International Organization for Standardization
Provided by IHS under license with ISO
No reproduction or networking permitted without license from IHS Not for Resale

10.4.5 Shutter opening force 14

11 Dimensional, mechanical and physical characteristics of the disk 14

11.1 General description of the disk 14
11.2 Reference axis and plane of the disk 14
11.3 Dimensions of the disk 14

11.3.1 Clamping Zone 14
11.3.2 Clamping force 15

11.4 Mechanical characteristics 15

11.4.1 Material 15
11.4.2 Mass 15
11.4.3 Moment of inertia 15
11.4.4 Imbalance 15
11.4.5 Axial deflection 15
11.4.6 Axial acceleration 15
11.4.7 Radial runout 15
11.4.8 Radial acceleration 15
11.4.9 Tilt 16

11.5 Optical characteristics 16

11.5.1 Index of refraction 16
11.5.2 Thickness of the substrate 16
11.5.3 Birefringence 16
11.5.4 Reflectance 16

12 Interface between cartridge and drive 16

12.1 Capture cylinder 16
12.2 Disk position in operating condition 17

Section 3 - Format of information 32

13 Geometry of physical tracks 32

13.1 Physical track shape 32
13.2 Direction of rotation 32
13.3 Physical track pitch 32
13.4 Addressable track number 32

14 Format of the Information Zone 32

14.1 General description of the Information Zone 32
14.2 Division of the Information Zone 32

14.2.1 Initial Zone 33
14.2.2 Test Zones for drives and manufacturers 33
14.2.3 Test Zones for servo 34
14.2.4 Control Zone 34
14.2.5 Data Zone 34

15 Addressable track format 34

15.1 Addressable track layout 34
15.2 Clock frequencies and periods 34
15.3 Radial alignment 35
15.4 Sector number 35

16 Sector format 35

16.1 Sector layout 35

Copyright International Organization for Standardization
Provided by IHS under license with ISO
No reproduction or networking permitted without license from IHS Not for Resale

16.2 Sector Mark (SM) **36**
16.3 VFO fields **36**
16.4 Address Mark (AM) **37**
16.5 ID fields **37**
16.6 Postamble 1 (PA1) **37**
16.7 Offset Detection Field (ODF) **37**
16.8 Gap **37**
16.9 Sync **37**
16.10 Data field **37**

16.10.1 User data bytes **38**
16.10.2 CRC and ECC bytes **38**
16.10.3 Resync bytes **38**

16.10.4 Postamble 2 (PA2) **38**
16.11 Buffer field **38**

17 Recording code **38**

18 Format of the Data Zone **40**

18.1 Buffer tracks in the Data Zone **44**
18.2 Defect Management Areas (DMAs) **44**
18.3 Disk Definition Structure (DDS) **44**
18.4 Defect Management Sector (DMS) **45**
18.5 Working Defect List (WDL) **46**
18.6 Partitioning **46**

19 Defect management **46**

19.1 Initialization of the disk **46**
19.2 Certification **47**

19.2.1 Slipping Algorithm **47**
19.2.2 Linear Replacement Algorithm **47**

19.3 Disks not certified **47**
19.4 Write procedure **47**

19.4.1 Rewritable disk **47**
19.4.2 Write once disk **48**

19.5 Primary Defect List (PDL) **48**
19.6 Secondary Defect List (SDL) and Working Defect List (WDL) **48**

19.6.1 Rewritable disk **48**
19.6.2 Write once disk **50**

Section 4 - Characteristics of embossed information **52**

20 Method of testing **52**

20.1 Environment **52**
20.2 Reference Drive **52**

20.2.1 Optics and mechanics **52**
20.2.2 Read power **52**
20.2.3 Read channels **53**
20.2.4 Tracking **53**

20.3 Definition of signals **53**

21 Signals from grooves **55**

21.1 Push-pull signal **55**

Copyright International Organization for Standardization
Provided by IHS under license with ISO
No reproduction or networking permitted without license from IHS Not for Resale

21.2 Divided push-pull signal 55
21.3 On-track signal 56
21.4 Phase depth 56
21.5 Track location 56

22 Signals from Headers 56

22.1 Sector Mark 56
22.2 VFO_1 and VFO_2 56
22.3 Address Mark, ID field and Postamble 56

23 Signals from embossed Recording fields 57

Section 5 - Characteristics of the recording layer 57

24 Method of testing 57

24.1 Environment 57
24.2 Reference Drive 57

24.2.1 Optics and mechanics 57
24.2.2 Read power 57
24.2.3 Read channel 57
24.2.4 Tracking 57

24.3 Write conditions 57

24.3.1 Write pulse 58
24.3.2 Write power and pulse width 58

24.4 Definition of signals 58

25 Write characteristics 58

25.1 Resolution and modulation depth 58
25.2 Narrow-band signal-to-noise ratio 58
25.3 Cross-talk 59

26 Overwrite erasability 59

Section 6 - Characteristics of user data 60

27 Method of testing 60

27.1 Environment 60
27.2 Reference Drive 60

27.2.1 Optics and mechanics 60
27.2.2 Read power 60
27.2.3 Read amplifiers 60
27.2.4 Analog-to-binary converters 60
27.2.5 Error correction 60
27.2.6 Tracking 60

28 Minimum quality of a sector 60

28.1 Headers 60

28.1.1 Sector Mark 60
28.1.2 ID fields 60

28.2 User-written data 61
28.3 Embossed data 61

29 Data interchange requirements 61

29.1 Tracking 61

Copyright International Organization for Standardization
Provided by IHS under license with ISO
No reproduction or networking permitted without license from IHS Not for Resale

29.2 User-written data 61
29.3 Quality of disk 61

Annexes

A - Edge distortion test 62

B - Compliance test 63

C - CRC for ID fields 65

D - Format of the Data field of a sector 66

E - Contents of the Control Zone 69

F - Definition of the overwrite pulse 72

G - Air cleanliness class 100 000 73

H - Position of the cartridge relative to the reference planes 74

J - Relaxation by zones of the requirements for signals 75

K - Track deviation measurement 76

L - Guidelines for sector replacement 80

M - Derivation of the operating climatic environment 81

N - Transportation 86

P - Office environment 87

Q - Measurement of birefringence 88

--`,,```,,,,````-`-`,,`,,`,`,,`---

Copyright International Organization for Standardization
Provided by IHS under license with ISO
No reproduction or networking permitted without license from IHS Not for Resale

Foreword

ISO (the International Organization for Standardization) and IEC (the International Electrotechnical Commission) form the specialized system for worldwide standardization. National bodies that are members of ISO or IEC participate in the development of International Standards through technical committees established by the respective organization to deal with particular fields of technical activity. ISO and IEC technical committees collaborate in fields of mutual interest. Other international organizations, governmental and non-governmental, in liaison with ISO and IEC, also take part in the work.

In the field of information technology, ISO and IEC have established a joint technical committee, ISO/IEC JTC 1. Draft International Standards adopted by the joint technical committee are circulated to national bodies for voting. Publication as an International Standard requires approval by at least 75 % of the national bodies casting a vote.

International Standard ISO/IEC 15485 was prepared by ECMA (as ECMA-240) and was adopted, under a special "fast-track procedure", by Joint Technical Committee ISO/IEC JTC 1, *Information technology*, in parallel with its approval by national bodies of ISO and IEC.

Annexes A to J form an integral part of this International Standard. Annexes K to Q are for information only.

Copyright International Organization for Standardization
Provided by IHS under license with ISO
No reproduction or networking permitted without license from IHS
Not for Resale

Introduction

This International Standard specifies the characteristics of 120 mm Optical Disk Cartridges (ODCs) with a capacity of 650 Mbytes using phase change technology. The format for the information on the disk is known as the PD format.

The 120 mm ODC has a large degree of commonality with CD-ROM so as to allow drive manufacturers to develop drives which can offer read compatibility with CD-ROM as defined in ISO/IEC 10149.

This International Standard specifies two types of ODCs (Type R/W and Type WORM) both of which are intended for use in dual-function optical disk drives with the capacility to handle both the 120 mm ODCs and CD-ROM disks such as those conforming to ISO/IEC 10149.

Copyright International Organization for Standardization
Provided by IHS under license with ISO
No reproduction or networking permitted without license from IHS
Not for Resale

Information technology — Date interchange on 120 mm optical disk cartridges using phase change PD format — Capacity: 650 Mbytes per cartridge

Section 1 - General

1 Scope

This International Standard specifies the characteristics of 120 mm Optical Disk Cartridges (ODCs) with a capacity of 650 Mbytes using Phase Change PD format. This present International Standard specifies two related, but different implementations of such cartridges, viz.

Type R/W Provides for data to be written, read and overwritten many times over the whole recording surface of the disk using the phase change recording and read-out method .

Type WORM Provides for data to be written once and read many times over the whole recording surface of the disk using the phase change recording and read-out method.

Type R/W and Type WORM are also referred to as "rewritable" and "write-once" respectively.

This International Standard specifies

- the conditions for conformance testing and the Reference Drive;
- the environments in which the cartridges are to be operated and stored;
- the mechanical and physical characteristics of the cartridge, so as to provide mechanical interchangeability between data processing systems;
- the format of the information on the disk known as the PD format; including the physical disposition of the tracks and sectors, the error correction codes, and the modulation method used;
- the characteristics of the embossed information on the disk;
- the phase change recording characteristics of the disk, enabling data processing systems to write data onto the disk;
- the minimum quality of user-written data on the disk, enabling data processing systems to read data from the disk.

This International Standard provides for interchange between optical disk drives. Together with a standard for volume and file structure, it provides for full data interchange between data processing systems.

2 Conformance

2.1 Optical disk cartridge

An optical disk cartridge shall be in conformance with this International Standard if it meets the mandatory requirements specified herein for its Type.

2.2 Generating system

A generating system shall be in conformance with this International Standard if the ODC it generates is in accordance with 2.1.

2.3 Receiving system

A receiving system shall be in conformance with this International Standard if it is able to handle an ODC according to 2.1.

2.4 Compatibility statement

A claim of conformance by a generating or receiving system with this International Standard shall include a statement listing any other International Optical Disk Cartridge Standard(s) supported. This statement shall specify the number of the standard(s), including, where appropriate, the ODC type(s) and whether support includes reading only or both reading and writing.

3 Normative reference

The following standard contains provisions which, through reference in this text, constitute provisions of this International Standard. At the time of publication, the edition indicated was valid. All standards are subjected to revision, and parties to

Copyright International Organization for Standardization
Provided by IHS under license with ISO
No reproduction or networking permitted without license from IHS Not for Resale

agreements based on this International Standard are encouraged to investigate the possibility of applying the most recent edition of the standard listed below. Members of IEC and ISO maintain registers of currently valid International Standard.

IEC 950:1991, *Safety of information technology equipment.*

4 Definitions

For the purposes of this International Standard, the following definitions apply.

4.1 addressable track: A continuous group of 64 sectors in which each sector can be addressed in a linear manner beginning with sector number 0.

4.2 band: A part of the Data Zone comprising a fixed number of consecutive physical tracks.

4.3 case: The housing for an optical disk, that protects the disk and facilitates disk interchange.

4.4 Channel bit: The elements by which the binary values ZERO and ONE are represented on the disk by either a space or a mark.

NOTE - In this International Standard each input bit is represented by two Channel bits. Their sequence depends on that of the input bits.

4.5 Clamping Zone: The annular part of the disk within which the clamping force is applied by the clamping device.

4.6 control track: A track containing the information on media parameters and format necessary for writing and reading the remaining tracks of the optical disk.

4.7 Cyclic Redundancy Check (CRC): A method for detecting errors in data.

4.8 defect management: A method for handling the defective areas on the disk.

4.9 disk reference plane: A plane defined by the perfectly flat annular surface of an ideal spindle onto which the clamping zone of the disk is clamped, and which is normal to the axis of rotation.

4.10 embossed mark: A mark so formed as to be unalterable by optical means.

4.11 entrance surface: The surface of the disk onto which the optical beam first impinges.

4.12 Error Correction Code (ECC): An error-detecting code designed to correct certain kinds of errors in data.

4.13 field: A subdivision of a sector.

4.14 format: The arrangement of information on the disk.

4.15 interleaving: The process of allocating the physical sequence of units of data so as to render the data more immune to burst errors.

4.16 land and groove. A trench-like feature of the disk, applied before the recording of any information, and used to define the track location. The groove is located nearer to the entrance surface than the land with which it is paired to form a track.

4.17 mark: A feature of the recording layer that may take the form of an amorphous spot, crystalline spot, a pit, or other form that can be sensed by the optical system. The pattern of marks represents the data on the disk.

NOTE - Subdivisions of a sector that are named 'mark' are not marks in the sense of this definition.

Copyright International Organization for Standardization
Provided by IHS under license with ISO
No reproduction or networking permitted without license from IHS Not for Resale

4.25 read power: The optical power, incident at the entrance surface of the disk, used when reading.

4.26 recording layer: A layer of the disk on, or in, which data is written during manufacture and/or use.

4.27 Reed-Solomon code: An error detection and/or correction code for the correction of errors that occur in bursts or are strongly correlated.

4.28 rewritable disk: An optical disk in which the data in specified areas can be rewritten by an optical beam.

4.29 sector: The smallest addressable part of a track in the Information Zone of a disk that can be accessed independently of other addressable parts of the zone.

4.30 spindle: The part of the disk drive which contacts the disk.

4.31 substrate: A transparent layer of the disk, provided for mechanical support of the recording layer, through which the optical beam accesses the recording layer.

4.32 write once disk: An optical disk in which the data in specified areas is irreversibly written and read many times by an optical beam.

4.33 ZCAV: A disk format requiring Zoned Constant Angular Velocity operations.

4.34 zone: An annular area of the disk.

5 Conventions and notations

5.1 Representation of numbers

A measured value is rounded off to the least significant digit of the corresponding specified value. It implies that a specified value of 1,26 with a positive tolerance of +0,01, and a negative tolerance of -0,02 allows a range of measured values from 1,235 to 1,275.

- Letters and digits in parentheses represent numbers in hexadecimal notation. [i.e. (F0) etc.]
- The setting of a bit is denoted by ZERO or ONE.
- Numbers in binary notation and bit combinations are represented by strings of digits 0 and 1.
- Numbers in binary notation and bit combinations are shown with the most significant bit to the left.
- Negative values of numbers in binary notation are given in TWO's complement.
- In each field the data is recorded so that the most significant byte (byte 0) is recorded first. Within each byte the least significant bit is numbered 0 and is recorded last, the most significant bit (numbered 7 in an 8-bit byte) is recorded first. This order of recording applies also to the data input of the Error Detection and Correction circuits and to their output.
- Unless otherwise stated, all track numbers refer to addressable tracks.

5.2 Names

The names of entities, e.g. specific tracks,fields, etc., are given with a capital.

6 List of acronyms

AM	Address Mark
CRC	Cyclic Redundancy Check
DC	Direct Current (d.c.)
DDS	Disk Definition Structure
DMA	Defect Management Area
DMS	Defect Management Sector
ECC	Error Correction Code
ID	Identifier
LSB	Least Significant Byte
MSB	Most Significant Byte
ODC	Optical Disk Cartridge
ODF	Offset Detection Field
PA	Postamble
PC	Phase Change

Copyright International Organization for Standardization
Provided by IHS under license with ISO
No reproduction or networking permitted without license from IHS Not for Resale

PDL	Primary Defect List
RLL(2,7)	Run Length Limited (code)
R/W	rewritable
SDL	Secondary Defect List
SM	Sector Mark
VFO	Variable Frequency Oscillator
WDL	Working Defect List
WORM	Write Once Read Many
ZCAV	Zoned Constant Angular Velocity

7 General description of the optical disk cartridge

The optical disk cartridge that is the subject of this International Standard consists of a case containing an optical disk.

The case is a protective enclosure for the disk. It has access windows covered by a shutter. The windows are automatically uncovered by the drive when the cartridge is inserted into it.

The optical disk is recordable on one side. In the rewritable disk, data can be written onto the disk as marks in the form of amorphous spots in the crystalline recording layer and can be overwritten on it with a focused optical beam, using the phase change effect between amorphous and crystalline states. In the write once disk, data can be irreversibly written onto the disk as marks in the form of crystalline spots in the amorphous recording layer, using phase change effect. The data can be read with a focused optical beam, using phase change effect as the reflective difference between amorphous and crystalline states. The beam accesses the recording layer through the transparent substrate of the disk.

Part of the disk contains read-only data for the drive in the form of pits embossed by the manufacturer. This data can be read using the diffraction of the optical beam by the embossed pits.

8 General requirements

8.1 Environments

8.1.1 Test environment

The test environment is the environment where the air immediately surrounding the optical disk cartridge has the following properties:

temperature	: 23 °C ± 2 °C
relative humidity	: 45 % to 55 %
atmospheric pressure	: 60 kPa to 106 kPa
air cleanliness	: Class 100 000 (see annex G)

No condensation on or in the optical disk cartridge shall occur. Before testing, the optical disk cartridge shall be conditioned in this environment for 48 h minimum. It is recommended that, before testing, the entrance surface of the optical disk shall be cleaned according to the instructions of the manufacturer of the disk.

Unless otherwise stated, all tests and measurements shall be made in this test environment.

8.1.2 Operating environment

This International Standard requires that an optical disk cartridge which meets all requirements of this International Standard in the specified test environment provides data interchange over the specified ranges of environmental parameters in the operating environment.

The operating environment is the environment where the air immediately surrounding the optical disk cartridge has the following properties:

temperature	: 5 °C to 55 °C
relative humidity	: 3 % to 85 %
absolute humidity	: 1 g/m^3 to 30 g/m^3
atmospheric pressure	: 60 kPa to 106 kPa
temperature gradient	: 10 °C/h max.
relative humidity gradient	: 10 %/h max.
air cleanliness	: Office environment (see annex P)

Copyright International Organization for Standardization
Provided by IHS under license with ISO
No reproduction or networking permitted without license from IHS Not for Resale

No condensation on or in the optical disk cartridge shall occur. If an optical disk cartridge has been exposed to conditions outside those specified in this clause, it shall be acclimatized in an allowed operating environment for at least 2 h before use. (See also annex M.)

8.1.3 Storage environment

The optical disk cartridge without any protective enclosure shall not be stored in an environment outside the range allowed for storage. The storage environment is defined as an environment where the air immediately surrounding the optical disk cartridge has the following properties:

temperature	: -10 °C to 55 °C
relative humidity	: 3 % to 90 %
absolute humidity	: 1 g/m^3 to 30 g/m^3
atmospheric pressure	: 60 kPa to 106 kPa
temperature gradient	: 15 °C/h max.
relative humidity gradient	: 10 %/h max.
air cleanliness	: Office environment (see annex P)

No condensation on or in the optical disk cartridge shall occur.

8.1.4 Transportation

This International Standard does not specify requirements for transportation; guidance is given in annex N.

8.2 Temperature shock

The optical disk cartridge shall withstand a temperature shock of up to 20°C when inserted into, or removed from, the drive.

8.3 Safety requirements

The cartridge shall satisfy the safety requirements of Standard IEC 950, when used in the intended manner or in any foreseeable use in an information processing system.

8.4 Flammability

The cartridge and its components shall be made from materials that comply with the flammability class for HB materials, or better, as specified in Standard IEC 950.

9 Reference Drive

The Reference Drive is a drive of which several critical components have well defined properties and which is used to test write, read and overwrite parameters of the disk for conformance to this International Standard. The critical components vary from test to test. This clause gives an outline of all components; components critical for tests in specific clauses only are specified in these clauses.

9.1 Optical system

The basic set-up of the optical system of the Reference Drive used for measuring the overwrite and read parameters are shown in figure 1. Different components and locations of components are permitted, provided that the performance remains the same as that of the set-up in figure 1. The optical system shall be such that the detected light reflected from the entrance surface of the disk is minimized so as not to influence the accuracy of the measurements.

Copyright International Organization for Standardization
Provided by IHS under license with ISO
No reproduction or networking permitted without license from IHS Not for Resale

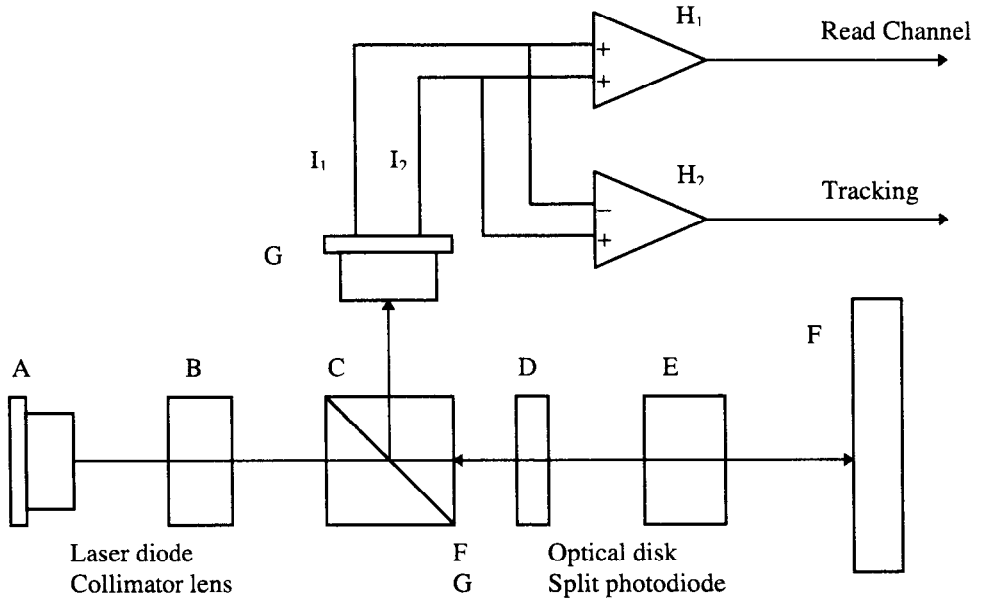

A	Laser diode	F	Optical disk
B	Collimator lens	G	Split photodiode
C	Polarizing beam splitter	H_1,H_2	d.c.-coupled amplifier
D	Quarter-wave plate	I_1,I_2	Output from split photodiode
E	Objective lens		

Figure 1 - Optical system of the Reference Drive

The combination of polarizing beam splitter C and a quarter-wave plate D shall separate the entrance optical beam from a laser diode A and the reflected optical beam from an optical disk F. The beam splitter C shall have a p-s intensity reflectance ratio of at least 100.

9.2 Optical beam

The focused optical beam used for writing and reading data shall have the following properties:

a) Wavelength (λ)	$780\ ^{+20}_{-10}$ nm
b) Wavelength (λ) divided by the numerical aperture of the objective lens (NA)	λ/ NA = 1,565 µm ± 0,030 µm
c) Filling D/W of the aperture of the objective lens tangential	radial 0,75 < D/W < 1,20 D/W < 0,65
d) Variance of the wavefront of the objective lens near the recording layer after passing through an ideal substrate	0 to λ^2 / 180
e) Polarization	Circular
f) Read power	see 20.2.2, 24.2.2 and 27.2.2
g) Write power and pulse width	see 24.3.2

D is the diameter of the lens aperture and W is the beam diameter of the Gaussian beam where the intensity is $1/e^2$ of the maximum intensity.

9.3 Read channel

One Read channel shall be provided to generate signals from the marks in the recording layer. This Read channel shall be used for reading the embossed marks, using the diffraction of the optical beam by the marks, and be used for reading the user-written marks, using the change of reflected intensity of the optical beam due to the phase change effect of the marks. The read amplifiers after the photo-detectors in the Read channel shall have a flat response within 1 dB from d.c. to 17,7 MHz.

Copyright International Organization for Standardization
Provided by IHS under license with ISO
No reproduction or networking permitted without license from IHS Not for Resale

9.4 Tracking

The Tracking channel of the drive provides the tracking error signals to control the servos for the axial and radial tracking of the optical beam. The method of generating the axial tracking error is not specified for the Reference Drive. The radial tracking error is generated by a split photodiode detector in the tracking channel. The division of the diode runs parallel to the image of the physical tracks on the diode.

The requirements for the accuracy with which the focus of the optical beam must follow the tracks is specified in 20.2.4.

9.5 Rotation of the disk

The spindle shall position the disk as specified in 12.2. It shall rotate the disk at 33,8 Hz ± 0,3 Hz. The direction of rotation shall be counter-clockwise when viewed from the objective lens.

Section 2 - Mechanical and physical characteristics

10 Dimensional and physical characteristics of the case

10.1 General description of the case (see figure 2a and 2b)

The case is a rigid protective container of rectangular shape. It has a spindle window on Side A to allow the spindle of the drive to clamp the disk. Both Side A and Side B of the case have a head window, the one on Side A for the optical head of the drive, the other one on Side B for the clamping means. A shutter uncovers the windows upon insertion into the drive, and automatically covers them upon removal from the drive. The case has features that enable a drive to reject a mis-inserted cartridge, to inhibit writing, gripper slots for an autochanger, and detents for autoloading, and for vertical use of the cartridge.

10.2 Reference planes of the case

The dimensions of the case shall be referred to three orthogonal reference planes X, Y and Z. The four reference surfaces S1 to S4 on Side A of the case shall lie in plane Z when measuring those dimensions of the case in 10.3 which are referenced to this plane. The intersection of the three planes defines the centre of the location hole. The centre of the alignment hole shall lie at the intersection of the X and Z planes (see annex H). A dimension of a feature referenced to one of the planes is the shortest distance from the feature to the plane.

10.3 Dimensions of the case

The dimensions of the case shall be measured in the test environment. The dimensions of the case in an operating environment can be estimated from the dimensions specified in this clause.

10.3.1 Overall dimensions (see figure 3)

The total length of the case shall be

$$L_1 = 135{,}0 \text{ mm} \pm 0{,}3 \text{ mm}$$

The distance from the top of the case to reference plane X shall be

$$L_2 = 113{,}0 \text{ mm} \pm 0{,}2 \text{ mm}$$

The distance from the bottom of the case to reference plane X shall be

$$L_3 = 22{,}0 \text{ mm} \pm 0{,}1 \text{ mm}$$

The total width of the case shall be

$$L_4 = 124{,}0 \text{ mm} \begin{matrix} +0{,}0 \text{ mm} \\ -0{,}3 \text{ mm} \end{matrix}$$

The distance from the left hand side of the case to reference plane Y shall be

$$L_5 = 113{,}0 \text{ mm} \begin{matrix} +0{,}0 \text{ mm} \\ -0{,}2 \text{ mm} \end{matrix}$$

The distance from the right hand side of the case to reference plane Y shall be

$$L_6 = 11{,}0 \text{ mm} \begin{matrix} +0{,}0 \text{ mm} \\ -0{,}1 \text{ mm} \end{matrix}$$

Copyright International Organization for Standardization
Provided by IHS under license with ISO
No reproduction or networking permitted without license from IHS Not for Resale

A corner at the top shall be rounded with a radius

$$R_1 = 2{,}0 \text{ mm} \pm 0{,}2 \text{ mm}$$

and the two corners at the bottom with a radius

$$R_2 = 2{,}0 \text{ mm} \pm 0{,}2 \text{ mm}$$

from the left-hand and right-hand edges of the case, the thickness of the case shall be

$$L_7 = 7{,}8 \text{ mm}\ {}^{+\,0{,}2 \text{ mm}}_{-\ 0{,}1 \text{ mm}}$$

The eight long edges of the case shall be rounded with a radius

$$R_3 = 0{,}5 \text{ mm} \pm 0{,}1 \text{ mm}$$

10.3.2 Location hole (see figure 3)

The centre of the location hole shall coincide with the intersection of the X,Y and Z plane. The diameter of the hole shall be

$$D_1 = 4{,}00 \text{ mm}\ {}^{+\,0{,}05 \text{ mm}}_{-\,0{,}00 \text{ mm}}$$

held to a depth

$$L_8 = 1{,}5 \text{ mm min.}$$

The location hole shall extend below plane Z by

$$L_9 = 5{,}0 \text{ mm min.}$$

with a diameter equal to, or greater than, D_1.

The location hole shall not extend through Side B.

The lead-in edges shall be chamfered and rounded off with a chamfer C_1 and a radius R_4 for the inner edge.

$$C_1 = 0{,}5 \text{ mm} \pm 0{,}1 \text{ mm}$$

$$R_4 = 0{,}2 \text{ mm}\ {}^{+\,0{,}1 \text{ mm}}_{-\,0{,}0 \text{ mm}}$$

10.3.3 Alignment hole (see figure 3)

The centre of the alignment hole shall lie at the intersection of planes X and Z at a distance

$$L_{10} = 102{,}0 \text{ mm} \pm 0{,}2 \text{ mm}$$

from reference plane Y.

The alignment hole shall have a substantially rectangular shape. Its dimensions shall be

$$L_{11} = 4{,}00 \text{ mm}\ {}^{+\,0{,}05 \text{ mm}}_{-\,0{,}00 \text{ mm}}$$

$$L_{12} = 5{,}6 \text{ mm}\ {}^{+\,0{,}2 \text{ mm}}_{-\,0{,}0 \text{ mm}}$$

held to a depth L_8.

The alignment hole shall extend below plane Z by L_9.

The alignment hole shall not extend through Side B.

The lead-in edges shall be chamfered and rounded with a chamfer C_1 and radius R_4.

Copyright International Organization for Standardization
Provided by IHS under license with ISO
No reproduction or networking permitted without license from IHS Not for Resale

10.3.4 Reference surfaces (see figure 4)

Side A of the case shall contain four reference surfaces S1, S2, S3, and S4.

Surface S1 shall be circular with a diameter

$$D_2 = 7{,}0 \text{ mm min.}$$

and S2 shall be oval-shaped having centres at the points specified by L_{13} with dimensions

$$R_5 = 3{,}5 \text{ mm min.}$$

$$L_{13} = 1{,}6 \text{ mm min.}$$

$$L_{14} = 7{,}0 \text{ mm min.}$$

S1 shall be centred on the location hole, and S2 shall be centred on the alignment hole.

Surfaces S3 and S4 shall be rectangular and shall be surrounded by the boundaries located at distances L_{15}, L_{16}, L_{17} and L_{18} from plane Y

$$L_{15} = 10{,}3 \text{ mm min.}$$

$$L_{16} = 5{,}0 \text{ mm max.}$$

$$L_{17} = 112{,}2 \text{ mm min.}$$

$$L_{18} = 107{,}5 \text{ mm max.}$$

and shall be surrounded by the boundaries located at distances L_{19} and L_{20} from plane X.

$$L_{19} = 105{,}0 \text{ mm min.}$$

$$L_{20} = 101{,}3 \text{ mm max.}$$

No portion of the case or of the shutter mechanism shall protrude more than

$$L_{21} = 0{,}15 \text{ mm max.}$$

beyond the reference plane Z and the surface of the other side of the case.

10.3.5 Detents (see figure 5)

The case shall have two symmetrical side detents and two symmetrical bottom detents.

The two symmetrical side detents are intended for autoloading. Each side detent shall extend from plane Z up to

$$L_{22} = 6{,}90 \text{ mm} \begin{matrix} +0{,}20 \text{ mm} \\ -0{,}05 \text{ mm} \end{matrix}$$

and shall not extend through Side B.

Each side detent is defined and positioned by the dimensions

$$R_6 = 1{,}0 \text{ mm} \pm 0{,}2 \text{ mm}$$

$$L_{23} = 100{,}5 \text{ mm} \pm 0{,}3 \text{ mm}$$

$$L_{24} = 98{,}1 \text{ mm} \pm 0{,}4 \text{ mm}$$

$$L_{25} = 92{,}9 \text{ mm} \pm 0{,}4 \text{ mm}$$

$$L_{26} = 3{,}0 \text{ mm} \pm 0{,}2 \text{ mm}$$

The outside edges of the side detents toward the top side of the cartridge shall be rounded off by a radius

$$R_7 = 0{,}5 \text{ mm} \pm 0{,}2 \text{ mm}$$

The two symmetrical bottom detents are intended for clamping the cartridge in case of vertical use. The cartridge can be clamped by the bottom detents and prevented from falling during vertical loading or unloading. Each bottom detent is defined by the dimensions

$$L_{27} = 3{,}0 \text{ mm} \pm 0{,}1 \text{ mm}$$

Copyright International Organization for Standardization
Provided by IHS under license with ISO
No reproduction or networking permitted without license from IHS Not for Resale

L_{28} = 3,0 mm ± 0,1 mm

L_{29} = 1,0 mm ± 0,1 mm

with their centres located at distances L_{30} and L_{31} from plane Y and at a distance L_{32} from plane Z.

L_{30} = 108,0 mm ± 0,2 mm

L_{31} = 6,0 mm ± 0,1 mm

L_{32} = 3,9 mm ± 0,1 mm

10.3.6 Write inhibit hole (see figure 6)

The case shall have a Write inhibit hole W in Side A. The diameter of the Write inhibit hole shall be

D_3 = 3,0 mm min.

Its centre line shall be in the reference plane Z, and parallel to the reference plane X at a distance

L_{33} = 18,5 mm ± 0,1 mm

and at a distance

L_{34} = 9,0 mm ± 0,1 mm

from plane Y.

When writing of the disk is not allowed, the Write inhibit hole W shall be extended from side A to side B.

The cartridge shall have a device capable of closing the Write inhibit hole.

When writing of the disk is allowed, the device is moved to close the Write inhibit hole W at the position L_{34}.

The Write inhibit hole W shall indicate whether or not writing on the disk is permitted as specified in table 1.

Table 1 - Use of the Write inhibit hole

W	Writing
Open	Inhibited
Closed	Permitted

The recess of the device surface shall be

L_{35} = 0,05 mm max.

from plane Z.

The device surface shall not protrude from plane Z.

10.3.7 Media sensor area (see figure 6)

The case shall have a reserved media sensor area A_1 with a diameter

D_4 = 3,0 mm min.

The centre of the area shall be at a distance

L_{36} = 14,5 mm ± 0,1 mm

from the reference plane Y, and at a distance L_{33} from the reference plane X. The reserved media sensor area shall be closed according to this International Standard.

The recess of the reserved area shall not be more than

L_{35} = 0,05 mm max.

The reserved media sensor area shall not protrude from plane Z.

The reserved media sensor area shall be reserved for future use.

Copyright International Organization for Standardization
Provided by IHS under license with ISO
No reproduction or networking permitted without license from IHS Not for Resale

10.3.8 Spindle and head windows (see figure 7a and 7b)

Side A of the case shall have a window to enable the spindle and the optical head of the drive to access the disk. The dimensions of the window are referenced to a centreline, located at a distance

$$L_{37} = 51{,}0 \text{ mm} \pm 0{,}1 \text{ mm}$$

from plane Y. The width of the window shall be given by

$$L_{38} = 16{,}5 \text{ mm} \begin{matrix} +0{,}1 \text{ mm} \\ -0{,}0 \text{ mm} \end{matrix}$$

and

$$L_{39} = 16{,}5 \text{ mm} \begin{matrix} +0{,}1 \text{ mm} \\ -0{,}0 \text{ mm} \end{matrix}$$

The top of the window shall be given by radius

$$R_8 = 64{,}0 \text{ mm} \pm 0{,}4 \text{ mm}$$

originating from L_{37} and

$$L_{40} = 40{,}0 \text{ mm} \pm 0{,}1 \text{ mm}$$

The bottom of the window shall be the arc of the semi-circle which joins the sides of the window. The centre of the semi-circle shall be defined by L_{37} and L_{40} and the radius shall be defined by R_9.

$$R_9 = 18{,}0 \text{ mm} \begin{matrix} +0{,}1 \text{ mm} \\ -0{,}0 \text{ mm} \end{matrix}$$

The diameter of the semi-circle opening is set larger than the width of the window for the purpose to secure the clamping zone.

Side B of the case shall have a window that enables clamping of the disk. The dimensions of the window are referenced to a centreline, located at a distance L_{37} from plane Y. The width of the window shall be given by L_{38} and L_{39}.

The top and bottom of the window shall be the arc and semi-circle with radii R_8 and R_9.

The area bounded by R_8 and top of the case on side A shall be recessed from plane Z by

$$L_{41} = 2{,}90 \text{ mm} \begin{matrix} +0{,}10 \text{ mm} \\ -0{,}05 \text{ mm} \end{matrix}$$

over the width of the window.

The area bounded by R_8 and the top of the case shall be, over the window, at a distance

$$L_{42} = 5{,}70 \text{ mm} \begin{matrix} +0{,}10 \text{ mm} \\ -0{,}15 \text{ mm} \end{matrix}$$

10.3.9 Shutter and shutter opener (see figures 7a, 7b, 8 and 9)

The case shall have a spring-loaded shutter designed to completely cover the spindle and head windows when closed. When open, the shutter shall expose the windows up to at least the minimum size allowed by the following dimensions, given in 10.3.8:

on Side A: from the semi-circle at the bottom of the window up to the top of the case, and from L_{38} to L_{39};

on Side B: from the semi-circle at the bottom of the window up to the top of the case, and from L_{38} to L_{39};

on the top: from plane Z to L_{41}, from L_{38} to L_{39}, from L_{42} up to Side B, and from L_{38} to L_{39}.

The profile on the top of the case provides a path over which the shutter opener of the drive can travel.

The shutter of the cartridge shall have a slot with an edge, against which the shutter opener of the drive can push to open the shutter.

The path shall run from

Copyright International Organization for Standardization
Provided by IHS under license with ISO
No reproduction or networking permitted without license from IHS
Not for Resale

$$L_{43} = 31{,}5 \text{ mm} \pm 0{,}3 \text{ mm}$$

to the position of just open

$$L_{44} = 67{,}8 \text{ mm} \begin{matrix} +0{,}3 \text{ mm} \\ -0{,}0 \text{ mm} \end{matrix}$$

at a distance L_{45} which is from plane X to the bottom of the slot for shutter opener.

$$L_{45} = 109{,}9 \text{ mm} \pm 0{,}3 \text{ mm}$$

The lead-in edge of the slot for shutter opener shall have a ramp with an angle

$$A_1 = 45° \pm 5°$$

The bottom of the slot for shutter opener shall have a width

$$L_{46} = 3{,}5 \text{ mm} \begin{matrix} +0{,}2 \text{ mm} \\ -0{,}1 \text{ mm} \end{matrix}$$

A movement of the edge to

$$L_{47} = 75{,}3 \text{ mm} \begin{matrix} +0{,}3 \text{ mm} \\ -0{,}0 \text{ mm} \end{matrix}$$

shall be sufficient to open the windows to the minimum size specified in 10.3.8 without exceeding the shutter opening force as specified in 10.4.5, while leaving the minimum size window open.

It shall be possible to move the edge to

$$L_{48} = 76{,}0 \text{ mm max.}$$

10.3.10 Mis-insertion protection (see figure 10)

The case shall have two features to prevent the case from being inserted in the drive upside-down.

The first feature consists in mis-insertion protection notches which block the loading of a case if it is inserted upside-down.

It shall have the dimensions

$$L_{49} = 8{,}0 \text{ mm} \pm 0{,}1 \text{ mm}$$

$$L_{50} = 2{,}0 \text{ mm} \pm 0{,}1 \text{ mm}$$

$$L_{51} = 110{,}0 \text{ mm} \begin{matrix} +0{,}1 \text{ mm} \\ -0{,}3 \text{ mm} \end{matrix}$$

$$L_{52} = 8{,}0 \text{ mm} \begin{matrix} +0{,}1 \text{ mm} \\ -0{,}3 \text{ mm} \end{matrix}$$

The depth of the mis-insertion protection notches shall be L_{53} and shall not be extended to side B.

$$L_{53} = 5{,}9 \text{ mm} \pm 0{,}1 \text{ mm}$$

The corners of mis-insertion protection notches are rounded by

$$R_{10} = 0{,}3 \text{ mm} \pm 0{,}1 \text{ mm}$$

$$R_{11} = 1{,}0 \text{ mm} \pm 0{,}2 \text{ mm}$$

The second feature is a chamfer and a case corner. The profile on the top of the case shall have a feature to prevent the case from being inserted in the drive upside-down.

If the case is correctly loaded, the chamfer pushes aside a possible pawl in the drive. If the case is inserted upside-down, the case corner pushes against the pawl and the case is prevented from further insertion of the case. The chamfer shall have an angle

$$A_2 = 45° \pm 2°$$

Copyright International Organization for Standardization
Provided by IHS under license with ISO
No reproduction or networking permitted without license from IHS Not for Resale

and a height

$$L_{54} = 3{,}7 \text{ mm} \begin{matrix} +0{,}3 \text{ mm} \\ -0{,}1 \text{ mm} \end{matrix}$$

10.3.11 Gripper slots (see figure 11)

The case shall have two symmetrical gripper slots. The slots shall have a depth of

$$L_{55} = 6{,}0 \text{ mm} \begin{matrix} +0{,}3 \text{ mm} \\ -0{,}0 \text{ mm} \end{matrix}$$

from the edge of the case and a width of

$$L_{56} = 6{,}0 \text{ mm} \begin{matrix} +0{,}3 \text{ mm} \\ -0{,}0 \text{ mm} \end{matrix}$$

The upper edge of a slot shall be

$$L_{57} = 5{,}0 \text{ mm} \begin{matrix} +0{,}0 \text{ mm} \\ -0{,}3 \text{ mm} \end{matrix}$$

below reference plane X.

The corners of the gripper slots shall be rounded off by radii

$$R_{12} = 1{,}0 \text{ mm} \pm 0{,}2 \text{ mm}$$

10.3.12 Label area (see figure 12)

The case shall have two label areas located on Side B and the bottom, with dimensions

SideB:

$$L_{58} = 5{,}3 \text{ mm} \pm 0{,}2 \text{ mm}$$

$$L_{59} = 29{,}2\text{mm} \pm 0{,}2 \text{ mm}$$

$$L_{60} = 44{,}0 \text{ mm} \pm 0{,}2\text{mm}$$

$$L_{61} = 89{,}0 \text{ mm} \pm 0{,}2 \text{ mm}$$

The four corners of the area shall be rounded with a radius $R_{13} = 1{,}5$ mm max.

When there is no label, the area shall be recessed by

$$L_{62} = 0{,}3 \text{ mm min.}$$

Bottom:

$$L_{63} = 1{,}0 \text{ mm} \pm 0{,}1 \text{ mm}$$

$$L_{64} = 103{,}0 \text{ mm} \pm 0{,}3 \text{ mm}$$

$$L_{65} = 6{,}0 \text{ mm} \pm 0{,}2 \text{ mm}$$

with centre line located at a distance L_{66} from plane Z.

$$L_{66} = 3{,}9 \text{ mm} \pm 0{,}2 \text{ mm}$$

The four corners of the area shall be rounded with a radius

$$R_{14} = 1{,}0 \text{ mm max.}$$

When there is no label, the area shall be recessed by

$$L_{67} = 0{,}3 \text{ mm min.}$$

10.4 Mechanical characteristics

The requirements of 10.4.1 to10.4.4 shall all be met in the operating environment.

Copyright International Organization for Standardization
Provided by IHS under license with ISO
No reproduction or networking permitted without license from IHS
Not for Resale

10.4.1 Material

The case shall be constructed from any suitable materials such that it meets the requirements of this International Standard.

10.4.2 Mass

The mass of the case without the optical disk shall not exceed 75 g.

10.4.3 Edge distortion

The cartridge shall meet the requirement of the edge distortion test defined in annex A.

10.4.4 Compliance

The cartridge shall meet the requirement of the compliance (flexibility) test defined in annex B. The requirement ensures that a cartridge can be constrained in the proper plane of operation within the drive.

10.4.5 Shutter opening force

The spring force on the shutter shall be such that the force required to fully open the shutter does not exceed 1,6 N. It shall be sufficiently strong to close a free-sliding shutter, irrespective of the orientation of the case.

11 Dimensional, mechanical and physical characteristics of the disk

11.1 General description of the disk

The disk shall consist of a circular substrate with a recording layer coated on one side. The recording layer can be protected from environmental influences by a protective layer. The Information Zone of the substrate is transparent so as to allow an optical beam to focus on the recording layer through the substrate. The disk has a centre hole which provides the radial centring of the disk .

11.2 Reference axis and plane of the disk (see figure 13)

The disk reference plane P is defined by the perfectly flat annular surface of an ideal spindle onto which the Clamping Zone of the disk is clamped, and which is normal to the axis of rotation of this spindle which passes through the centre of the centre hole of the disk, and is normal to plane P.

11.3 Dimensions of the disk (see figure 13)

The dimensions of the disk shall be measured in the test environment. The dimensions of the disk in an operating environment can be estimated from the dimensions specified below. The outer diameter of the disk shall be

$$D_5 = 120{,}0 \text{ mm} \begin{matrix} +\,0{,}2 \text{ mm} \\ -\,0{,}2 \text{ mm} \end{matrix}$$

Excluding axial deflection (see 11.4.5), the total thickness of the disk shall not exceed 1,4 mm with the exception of the annular region between concentric circles of diameter 40,0 mm and 42,5 mm. Within this annular region of the disk, a projection of not more than 0,24 mm in height below the reference plane of the disk is permitted.

The diameter of the centre hole of the disk shall be

$$D_6 = 15{,}0 \text{ mm} \begin{matrix} +\,0{,}1 \text{ mm} \\ -\,0{,}0 \text{ mm} \end{matrix}$$

11.3.1 Clamping Zone (see figure 13)

The outer diameter of the Clamping Zone shall be

$$D_7 = 33{,}0 \text{ mm min.}$$

The inner diameter of the Clamping Zone shall be

$$D_8 = 26{,}0 \text{ mm max.}$$

The lead-in edge of the centre hole shall have a chamfer C_2 of 45° by 0,1 mm max. or shall be rounded off by a radius

$$R_{15} = 0{,}1 \text{ mm max.}$$

Burrs opposite the entrance surface of the centre hole are permitted. The height of such burrs shall be less than 0,2 mm.

Copyright International Organization for Standardization
Provided by IHS under license with ISO
No reproduction or networking permitted without license from IHS
Not for Resale

11.3.2 Clamping force

The clamping force on the Clamping Zone of a disk shall not exceed 10 N.

11.4 Mechanical characteristics

The requirements of 11.4.1 to 11.4.4 shall all be met in the operating environment.

11.4.1 Material

The disk shall be made from any suitable materials such that it meets the requirements of this International Standard. The only material properties specified by this International Standard are the optical properties of the substrate in the Information Zone (see 11.5).

11.4.2 Mass

The mass of the disk shall not exceed 20,0 g.

11.4.3 Moment of inertia

The moment of inertia of the disk relative to axis A shall not exceed 0,040 g•m^2.

11.4.4 Imbalance

The imbalance of the disk relative to axis A shall not exceed 0,006 g•m.

11.4.5 Axial deflection

The axial deflection of the disk is measured as the axial deviation of the recording layer. Thus, it comprises the tolerances on the thickness of the substrate, on its index of refraction and the deviation of the entrance surface from plane P. The nominal position of the recording layer with respect to reference plane P is determined by the nominal thickness of the substrate.

The deflection of any point of the recording layer in the Information Zone from its nominal position, in a direction normal to plane P, shall not exceed 0,35 mm for rotational frequencies of the disk up to 33,8 Hz.

11.4.6 Axial acceleration

The maximum allowed axial error e_{max} (see annex K) shall not exceed ± 1,0 µm, measured using the Reference Servo for axial tracking of the recording layer. The rotational frequency of the disk shall be 33,8 Hz ± 0,3 Hz. The stationary part of the motor is assumed to be motionless (no external disturbances). The measurement shall be made using a servo with the transfer function

$$H_s(i\omega) = \frac{1}{3} \times \left(\frac{\omega_0}{i\omega} \right)^2 \times \frac{1 + \dfrac{3i\omega}{\omega_0}}{1 + \dfrac{i\omega}{3\omega_0}}$$

where

$\omega = 2\pi f$

$\omega_0 / 2\pi = 1\,085$ Hz

$i = \sqrt{-1}$

or any other servo with $|1+H|$ within 20% of $|1+H_s|$ in the bandwidth of 33,8 Hz to 100 kHz. Thus, the disk shall not require an axial acceleration of more than 15,5 m/s^2 at low frequencies from the servo motor of the Reference Servo.

11.4.7 Radial runout

The radial runout of the tracks in the recording layer in the Information Zone is measured as seen by the optical head of the Reference Drive. Thus, it includes the distance between the axis of rotation of the spindle and reference axis A, the tolerances on the dimensions between axis A and the location of the track, and effects of non-uniformities in the index of refraction.

The runout, defined as the difference between the maximum and minimum distance of the centre of any track from the axis of rotation, measured along a fixed radial line over one revolution of the disk, shall not exceed 70 µm at a rotational frequency of the disk of 33,8 Hz ± 0,3 Hz.

11.4.8 Radial acceleration

The maximum allowed tracking error e_{max} (see annex K) shall not exceed ± 0,15 µm, measured using the Reference Servo for radial tracking of the tracks. The rotational frequency of the disk shall be 33,8 Hz ± 0,3 Hz. The stationary part of the motor is assumed to be motionless (no external disturbances). The measurement shall be made using a servo with the transfer function

Copyright International Organization for Standardization
Provided by IHS under license with ISO
No reproduction or networking permitted without license from IHS
Not for Resale

$$H_s(i\omega) = \frac{1}{3} \times \left(\frac{\omega_0}{i\omega} \right)^2 \times \frac{1 + \frac{3i\omega}{\omega_0}}{1 + \frac{i\omega}{3\omega_0}}$$

where

$\omega = 2\pi f$
$\omega_0 / 2\pi = 1\,425$ Hz
$i = \sqrt{-1}$

or any other servo with $|1+H|$ within 20% of $|1+H_s|$ in the bandwidth of 33,8 Hz to 100 kHz. Thus, the disk shall not require a radial acceleration of more than 4 m/s^2 at low frequencies from the servo motor of the Reference Servo.

11.4.9 Tilt

The tilt is the angle which the normal to the entrance surface, averaged over an area of 1 mm in diameter, makes with the normal to plane P. It shall not exceed 7 mrad in the Information Zone.

11.5 Optical characteristics

11.5.1 Index of refraction

The index of refraction of the substrate in the Information Zone shall be within the range from 1,46 to 1,60.

11.5.2 Thickness of the substrate

The thickness of the substrate, from the entrance surface to the recording layer, in the Information Zone shall be

$$t(n) = 0{,}509 \times \frac{n^3}{n^2 - 1} \times \frac{n^2 + 0{,}265}{n^2 + 0{,}593} \text{ mm}$$

with a tolerance of ± 0,05 mm where n is the index of refraction.

11.5.3 Birefringence

The effect of the birefringence of the substrate is included in the measurement of the imbalance of the signals in Channels 1 and 2 of the set-up for measurement in annex Q. The imbalance can be measured by the optical beam on a double passage through a substrate when measured as described in annex Q. It shall not exceed

0,10 in the Data zone

0,15 in the Lead-In and Lead-Out Zones.

11.5.4 Reflectance

The double-pass optical transmission of the substrate and the reflectance of the recording layer are measured together as the reflectance R of the disk. The value of R shall lie within the range from 0,19 to 0,38 for Type R/W disks. The value of R shall lie within the range from 0,24 to 0,48 for Type WORM disks.

The actual value R_m shall be measured with the focused beam and wavelength of the Reference Drive. It shall be measured in unrecorded, ungrooved areas, e.g. the ODF of a sector (see 16.7).

The value R_m shall equal $R(1 \pm 0{,}12)$.

12 Interface between cartridge and drive

12.1 Capture cylinder (see figure 14)

The capture cylinder is defined as the volume in which the spindle can expect the centre of the hole in the disk to be, just prior to capture, and with the cartridge constrained as in 10.4.4. The size of the cylinder defines the permissible play of the disk inside its cavity in the case. The cylinder is referred to perfectly located and perfectly sized alignment and location pins in the drive; it includes the tolerances of those dimensions of the case and the disk which are between the two pins mentioned and the centre of the disk.

The bottom of the cylinder is parallel to plane Z, and shall be located a distance

L_{68} = 2,25 mm min.

Copyright International Organization for Standardization
Provided by IHS under license with ISO
No reproduction or networking permitted without license from IHS Not for Resale

above plane Z. The top of the cylinder is located a distance

$$L_{69} = 4{,}7 \text{ mm max.}$$

above plane Z. The diameter of the cylinder shall be

$$D_9 = 2{,}1 \text{ mm max.}$$

and its centre shall be given by the nominal values of L_{37} and L_{40} in the drive.

12.2 Disk position in operating condition (see figure 15)

When the disk is in the operating condition within the drive, the position of plane P of the disk shall be

$$L_{70} = 3{,}3 \text{ mm} \pm 0{,}1 \text{ mm}$$

above plane Z of the case, and the axis of rotation shall be within a circle with a diameter

$$D_{10} = 0{,}2 \text{ mm max.}$$

and a centre given by the nominal values of L_{37} and L_{40}.

Copyright International Organization for Standardization
Provided by IHS under license with ISO
No reproduction or networking permitted without license from IHS
Not for Resale

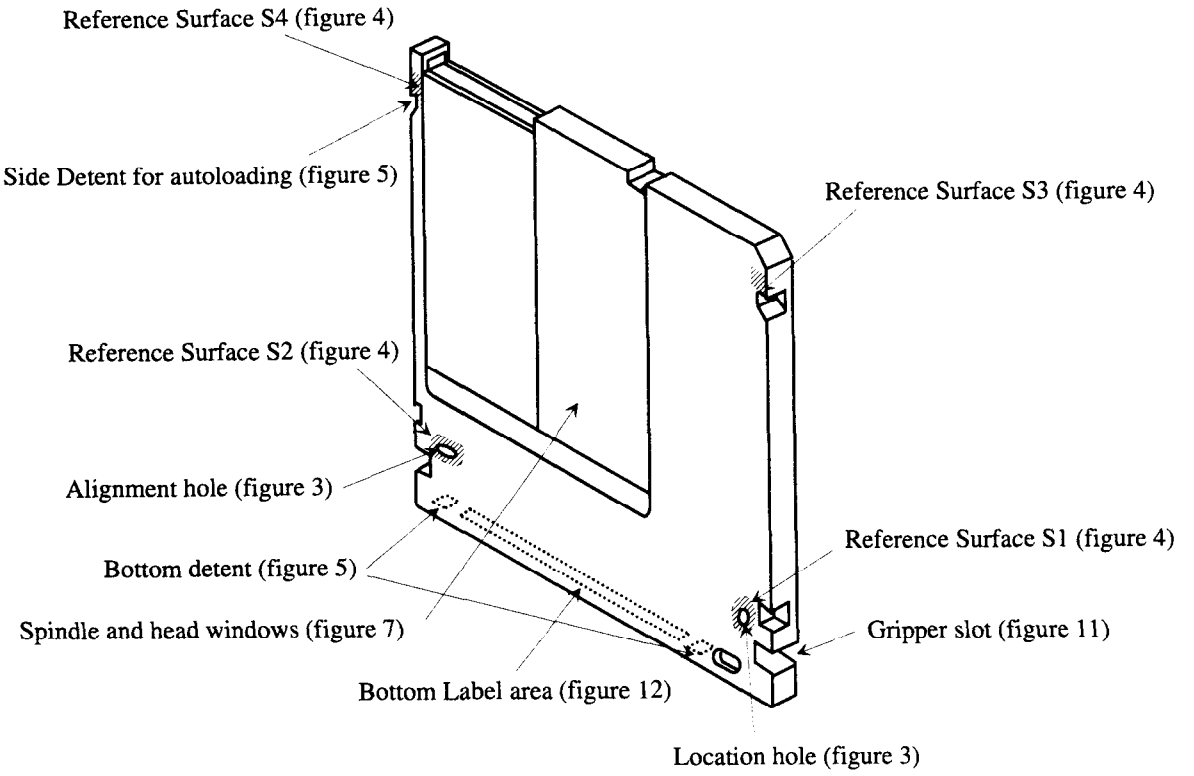

Figure 2a - General view of the case side A

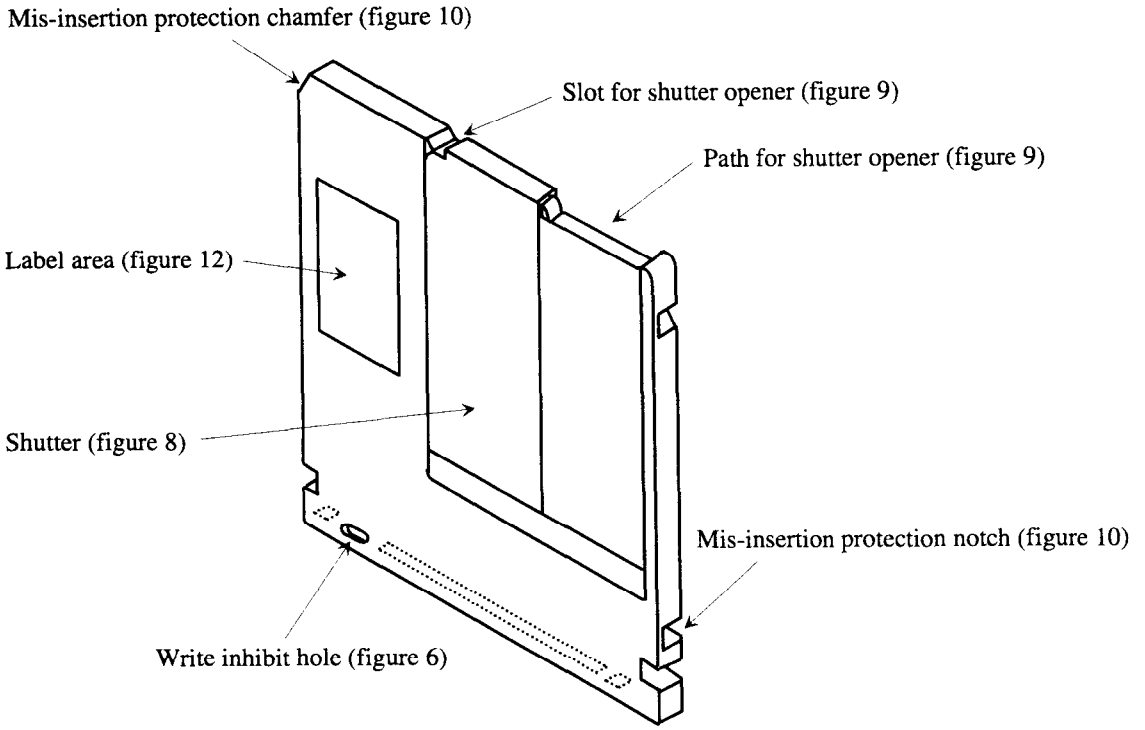

Figure 2b - General view of the case side B

Copyright International Organization for Standardization
Provided by IHS under license with ISO
No reproduction or networking permitted without license from IHS
Not for Resale

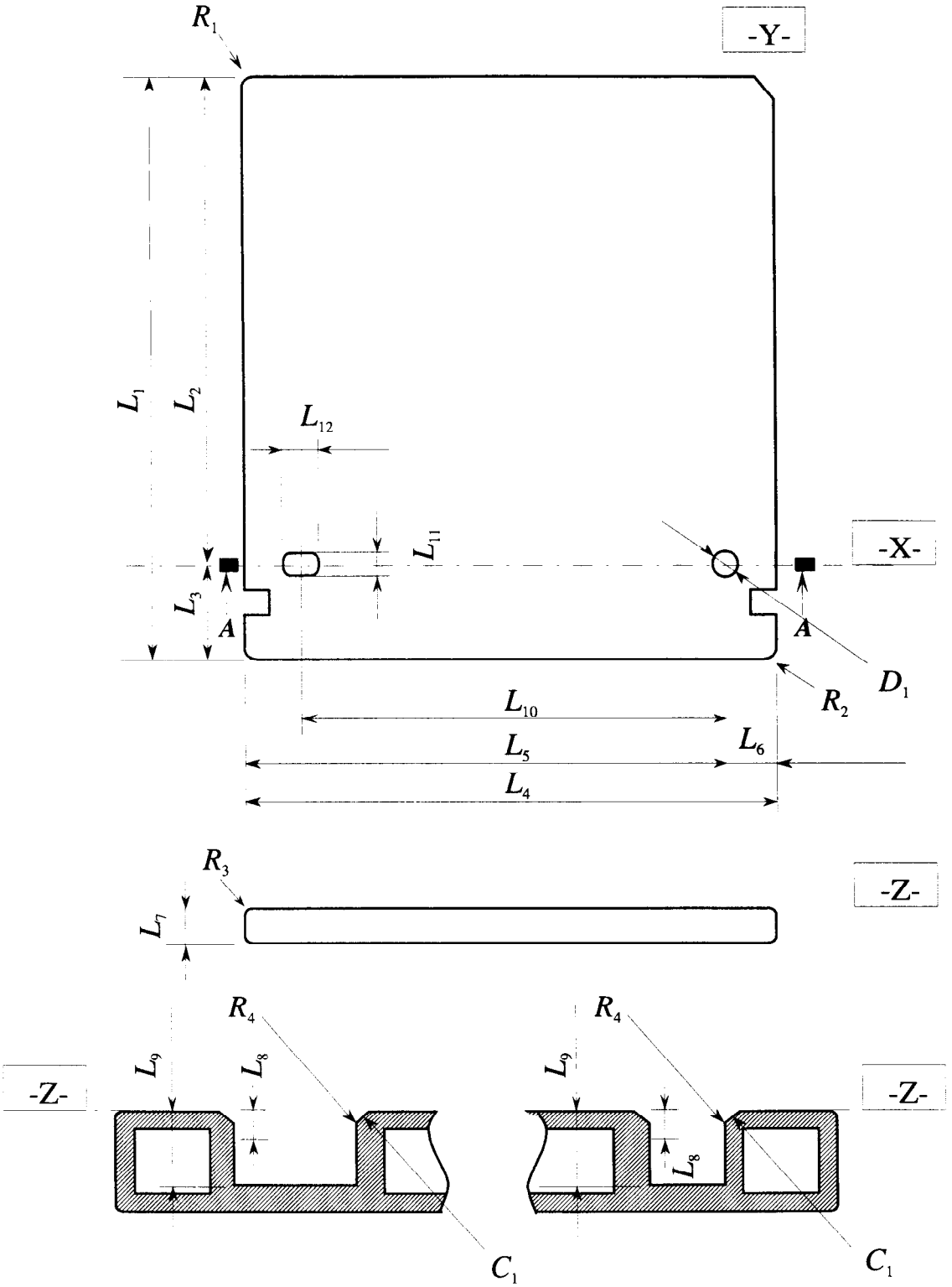

Section A-A
(Larger scale)

Figure 3 - Overall dimensions, viewed on side A

Copyright International Organization for Standardization
Provided by IHS under license with ISO
No reproduction or networking permitted without license from IHS
Not for Resale

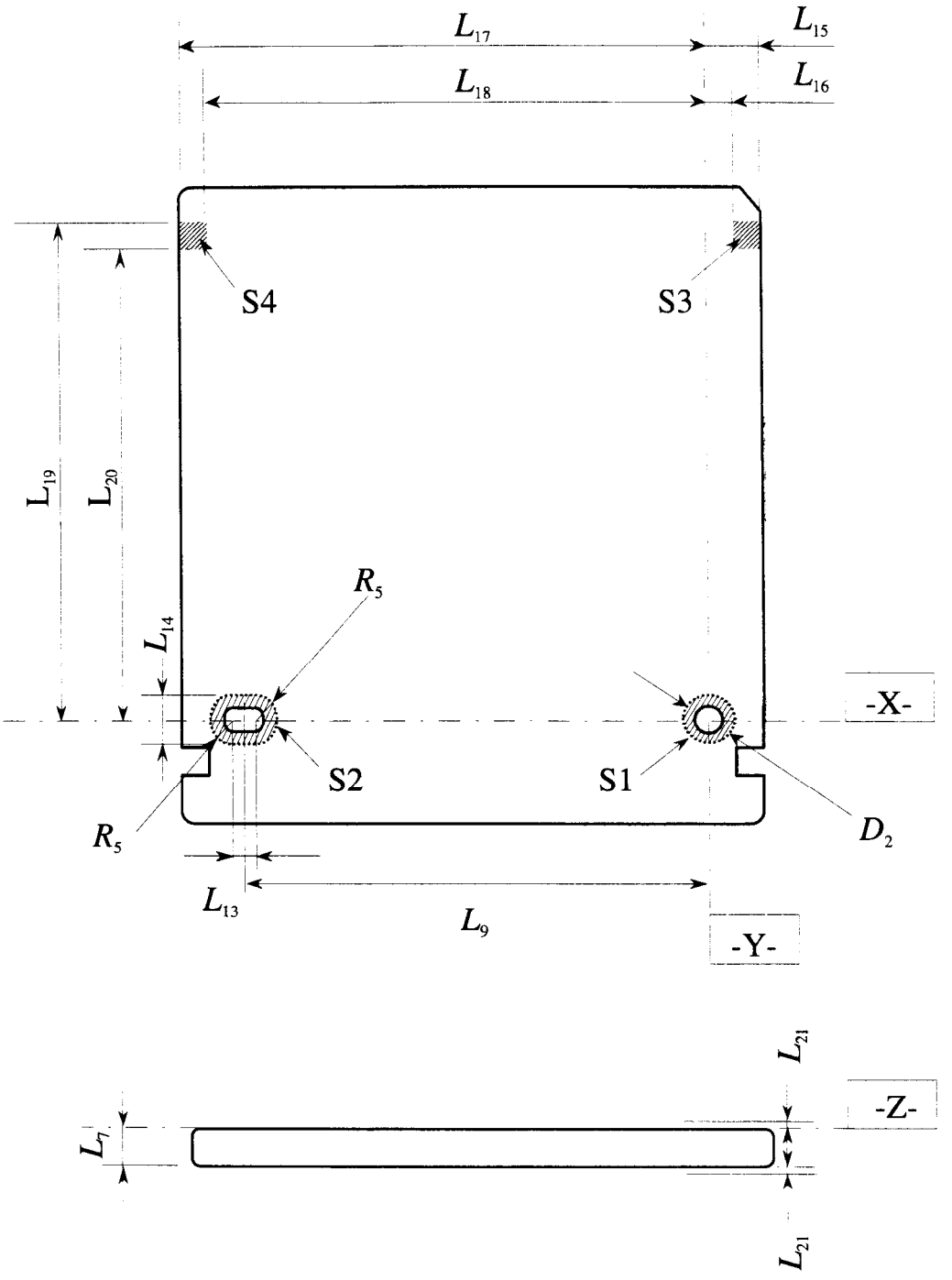

Figure 4 - Reference surface on side A

Copyright International Organization for Standardization
Provided by IHS under license with ISO
No reproduction or networking permitted without license from IHS
Not for Resale

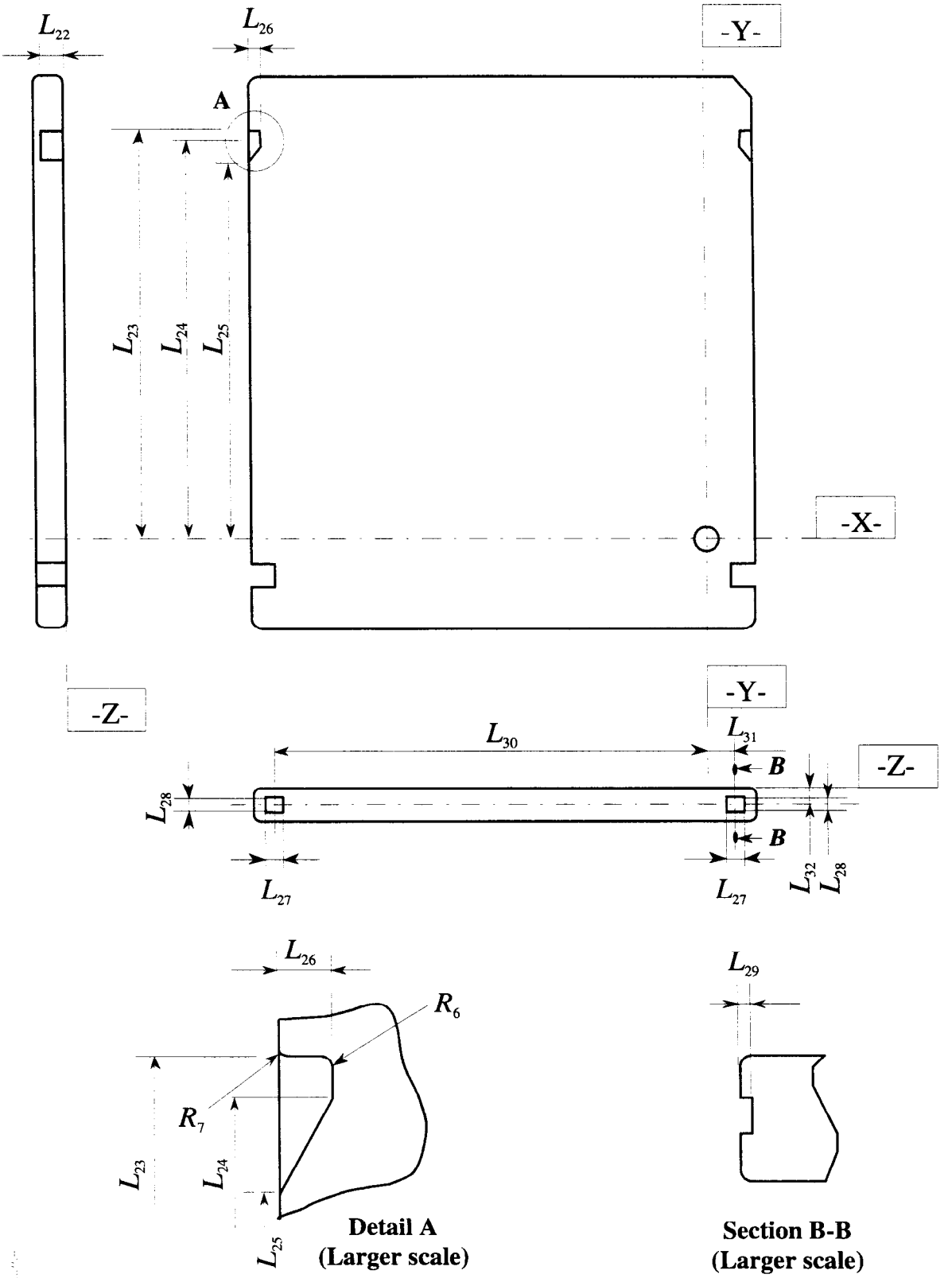

Figure 5 - Detents on side A and bottom

Copyright International Organization for Standardization
Provided by IHS under license with ISO
No reproduction or networking permitted without license from IHS
Not for Resale

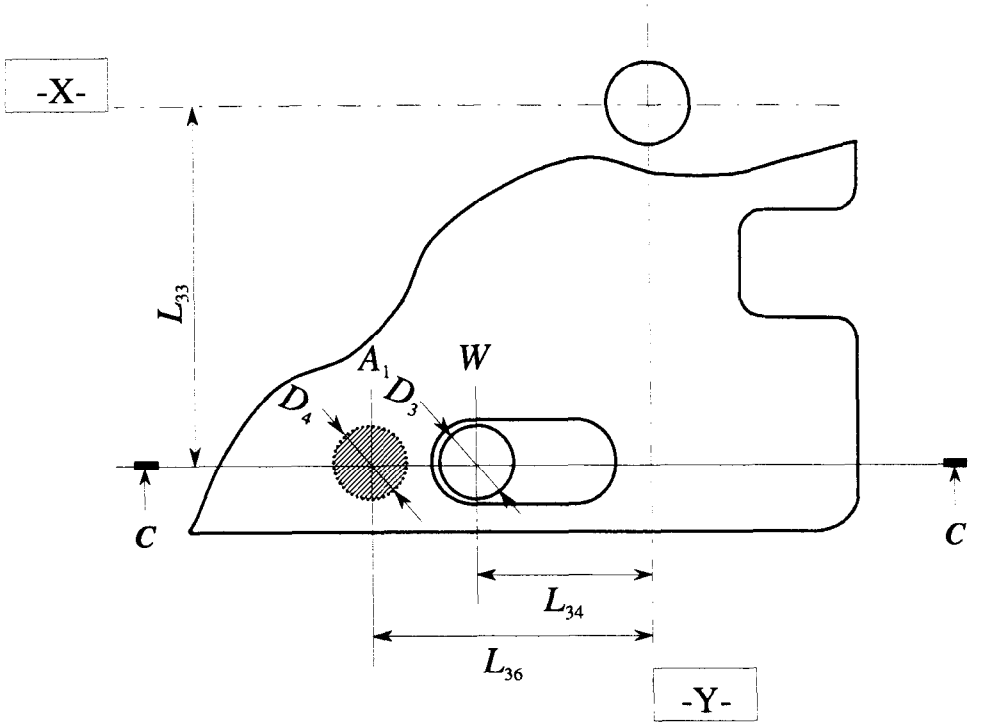

(Larger scale)

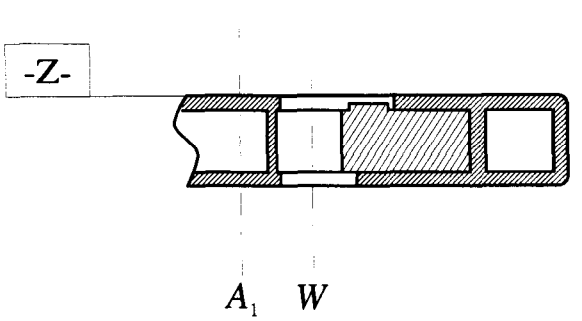

Section C-C
Writing inhibited
(Larger scale)

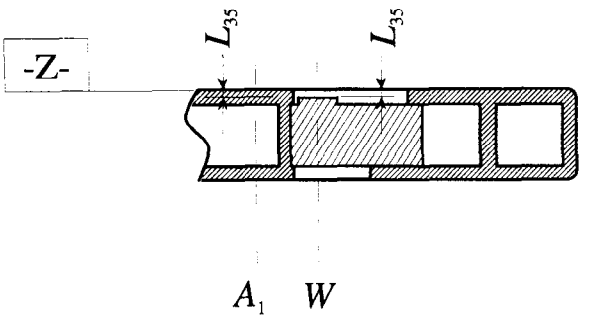

Section C-C
Writing permitted
(Larger scale)

Figure 6 - Write inhibit hole W, Media sensor area A1 seen on side A and in cross section

Copyright International Organization for Standardization
Provided by IHS under license with ISO
No reproduction or networking permitted without license from IHS
Not for Resale

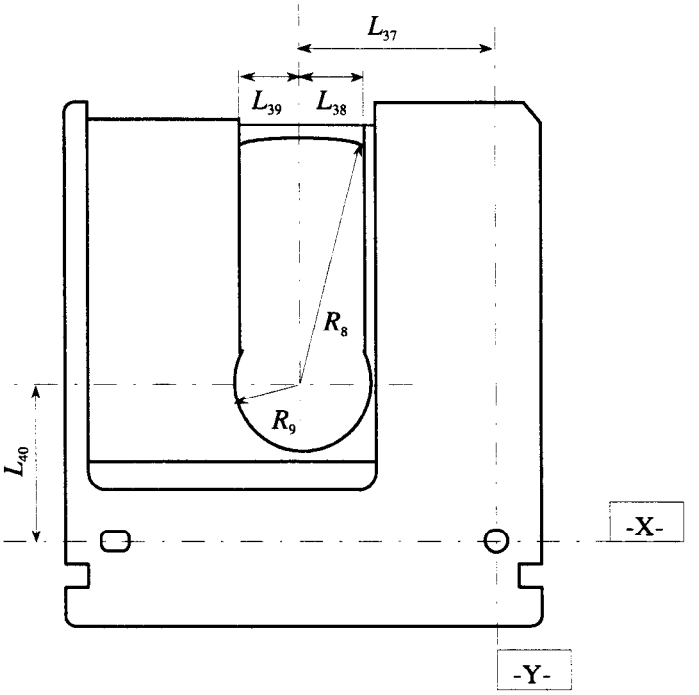

Figure 7a - Spindle and head windows on side A

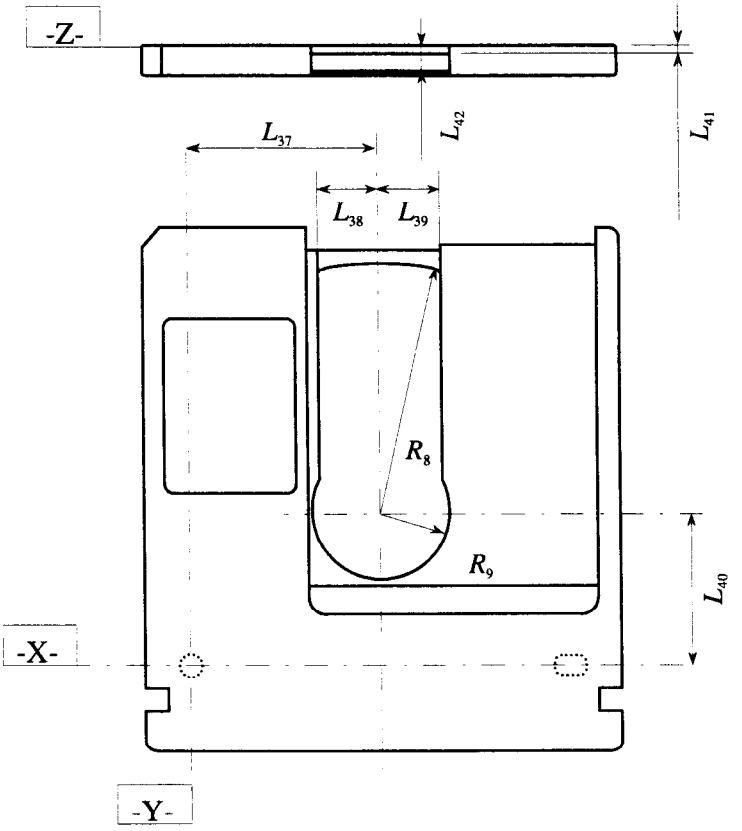

Figure 7b - Spindle and head windows on side B

Copyright International Organization for Standardization
Provided by IHS under license with ISO
No reproduction or networking permitted without license from IHS
Not for Resale

©ISO/IEC

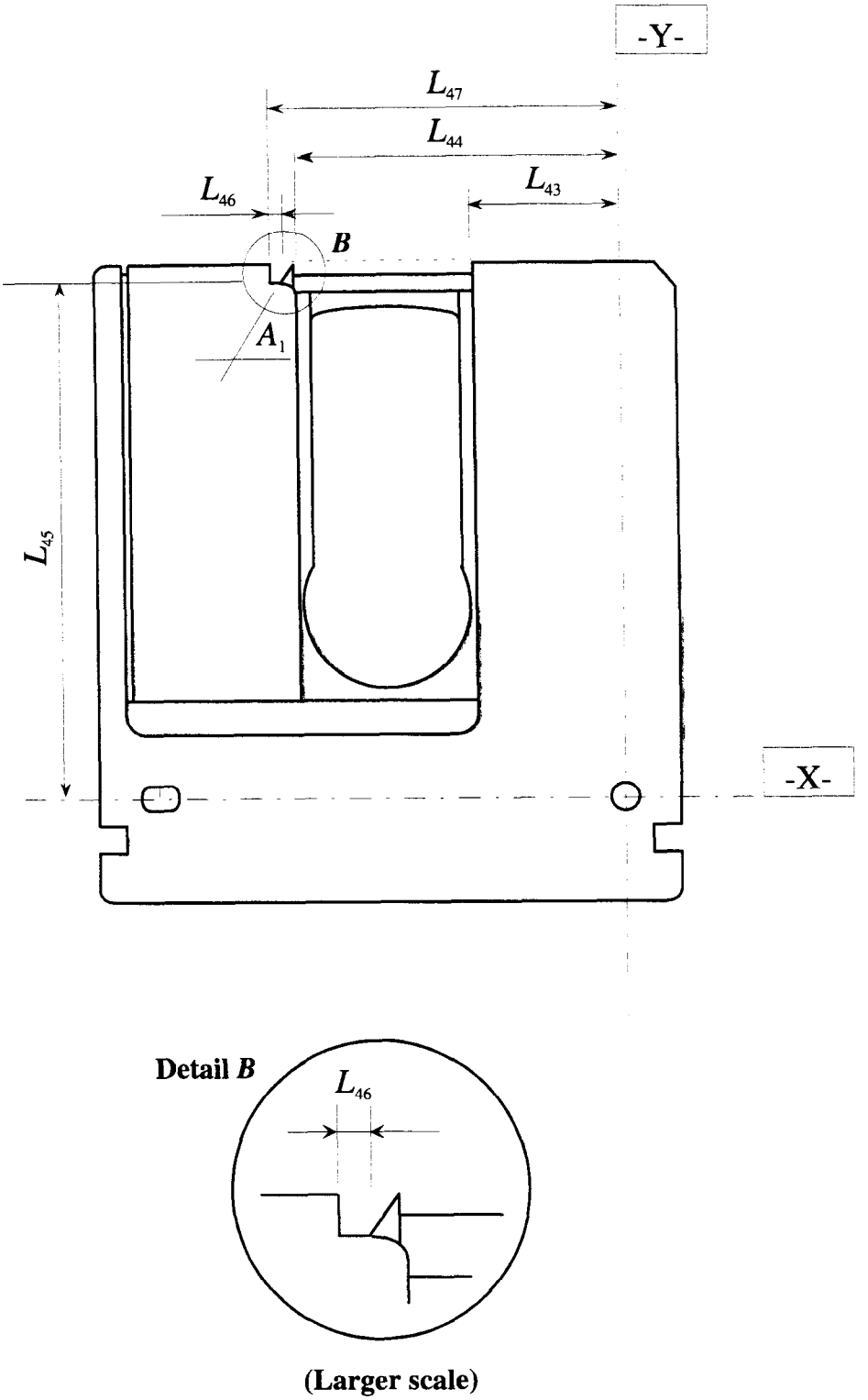

Figure 8 - Shutter and shutter opener seen from side A

(Shutter in just open position)

Copyright International Organization for Standardization
Provided by IHS under license with ISO
No reproduction or networking permitted without license from IHS
Not for Resale

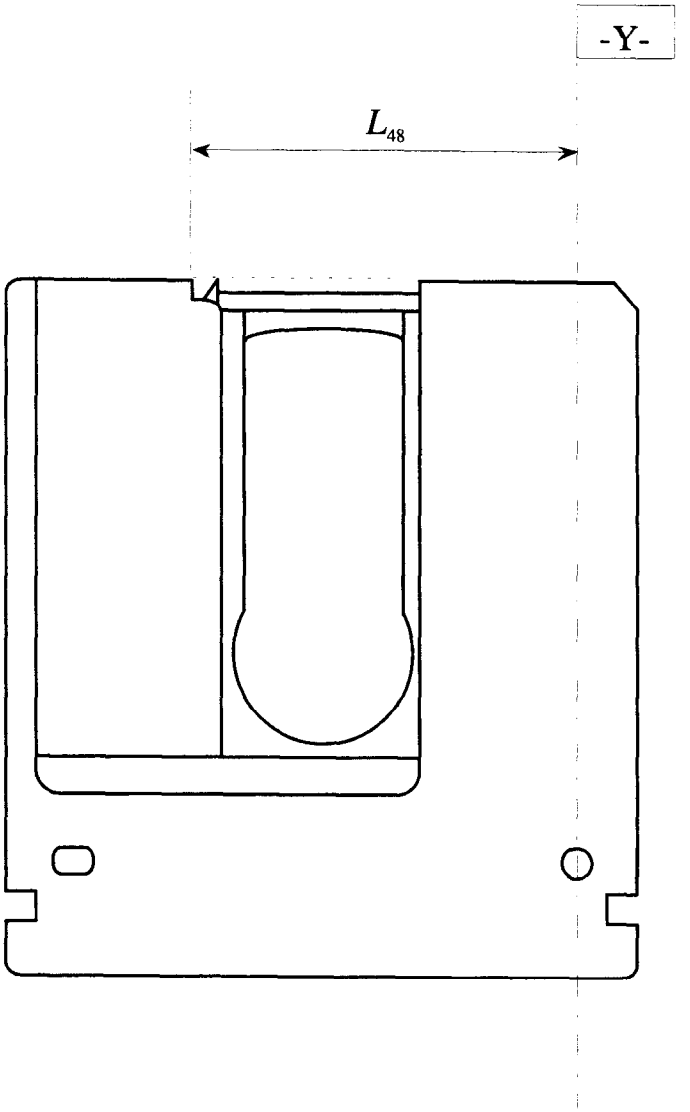

Figure 9 - Shutter and shutter opener seen from side A

(Shutter in maximum open position)

Copyright International Organization for Standardization
Provided by IHS under license with ISO
No reproduction or networking permitted without license from IHS
Not for Resale

©ISO/IEC

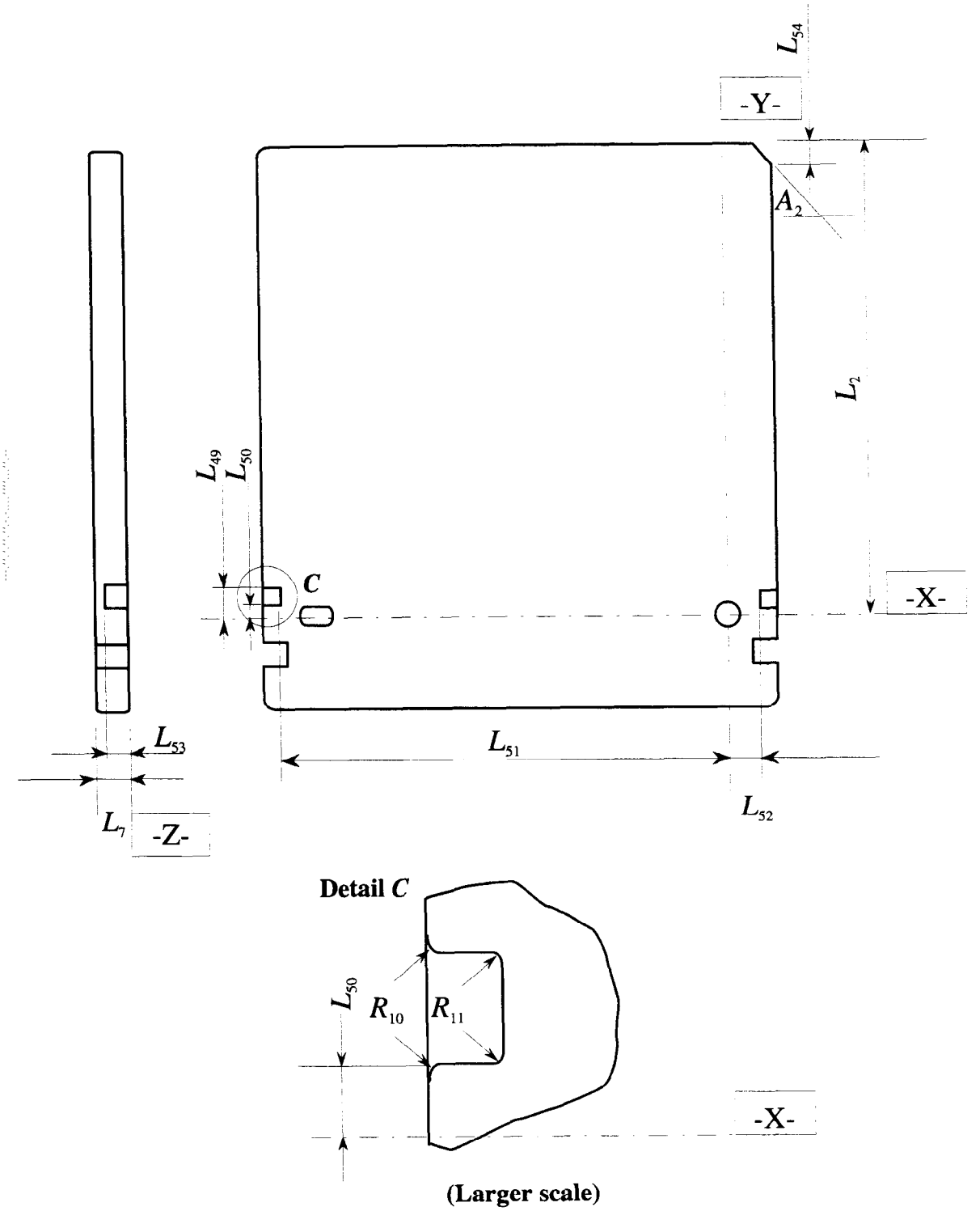

Figure 10 - Mis-insertion protection, seen from side A

Copyright International Organization for Standardization
Provided by IHS under license with ISO
No reproduction or networking permitted without license from IHS
Not for Resale

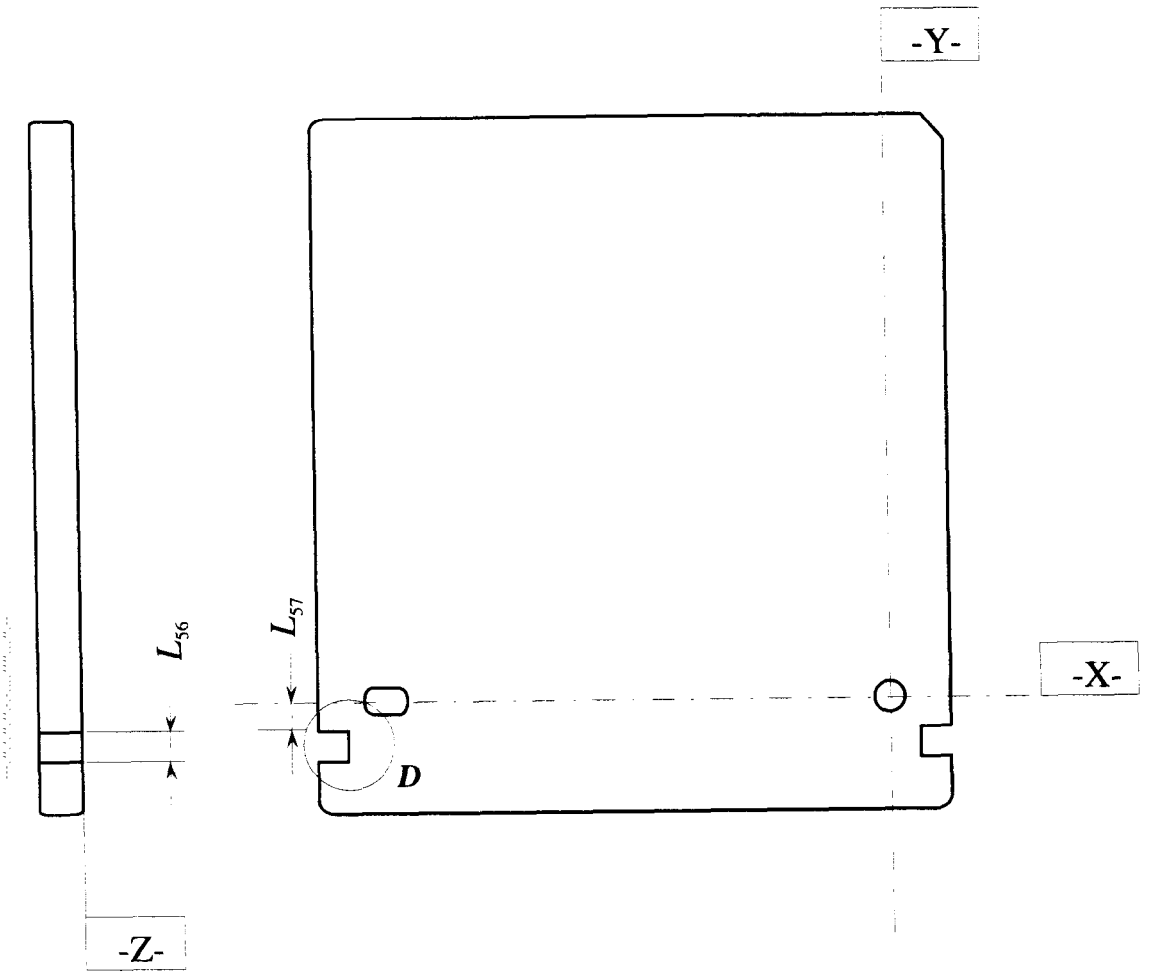

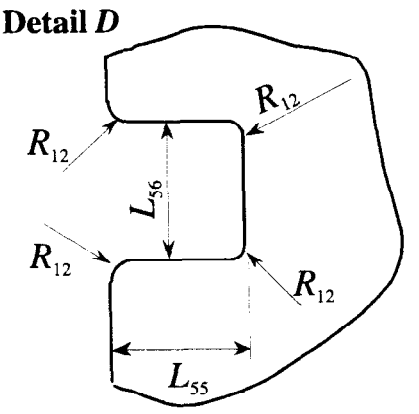

(Larger scale)

Figure 11 - Gripper slots of side A

Copyright International Organization for Standardization
Provided by IHS under license with ISO
No reproduction or networking permitted without license from IHS
Not for Resale

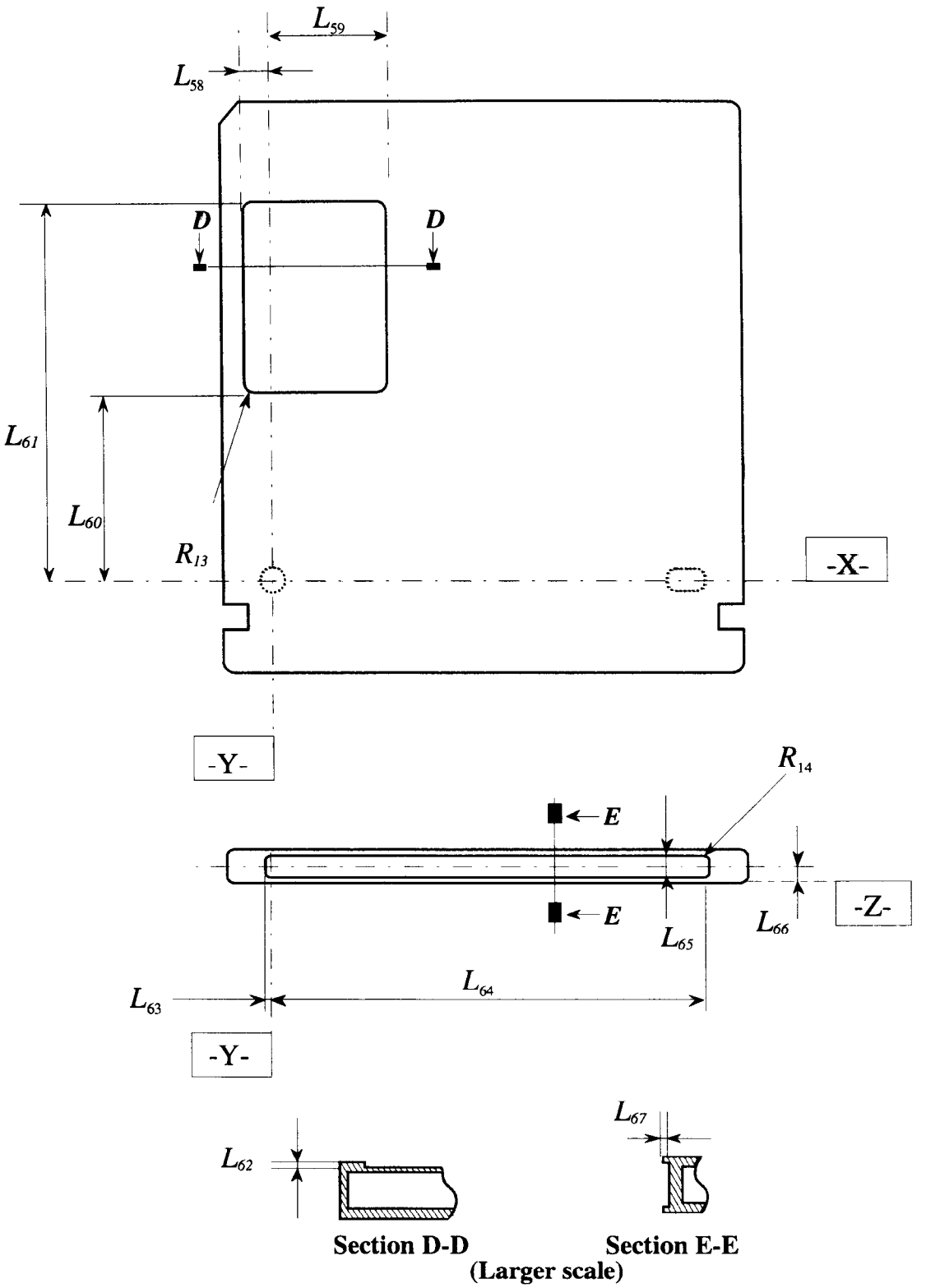

Figure 12 - Label area

Copyright International Organization for Standardization
Provided by IHS under license with ISO
No reproduction or networking permitted without license from IHS
Not for Resale

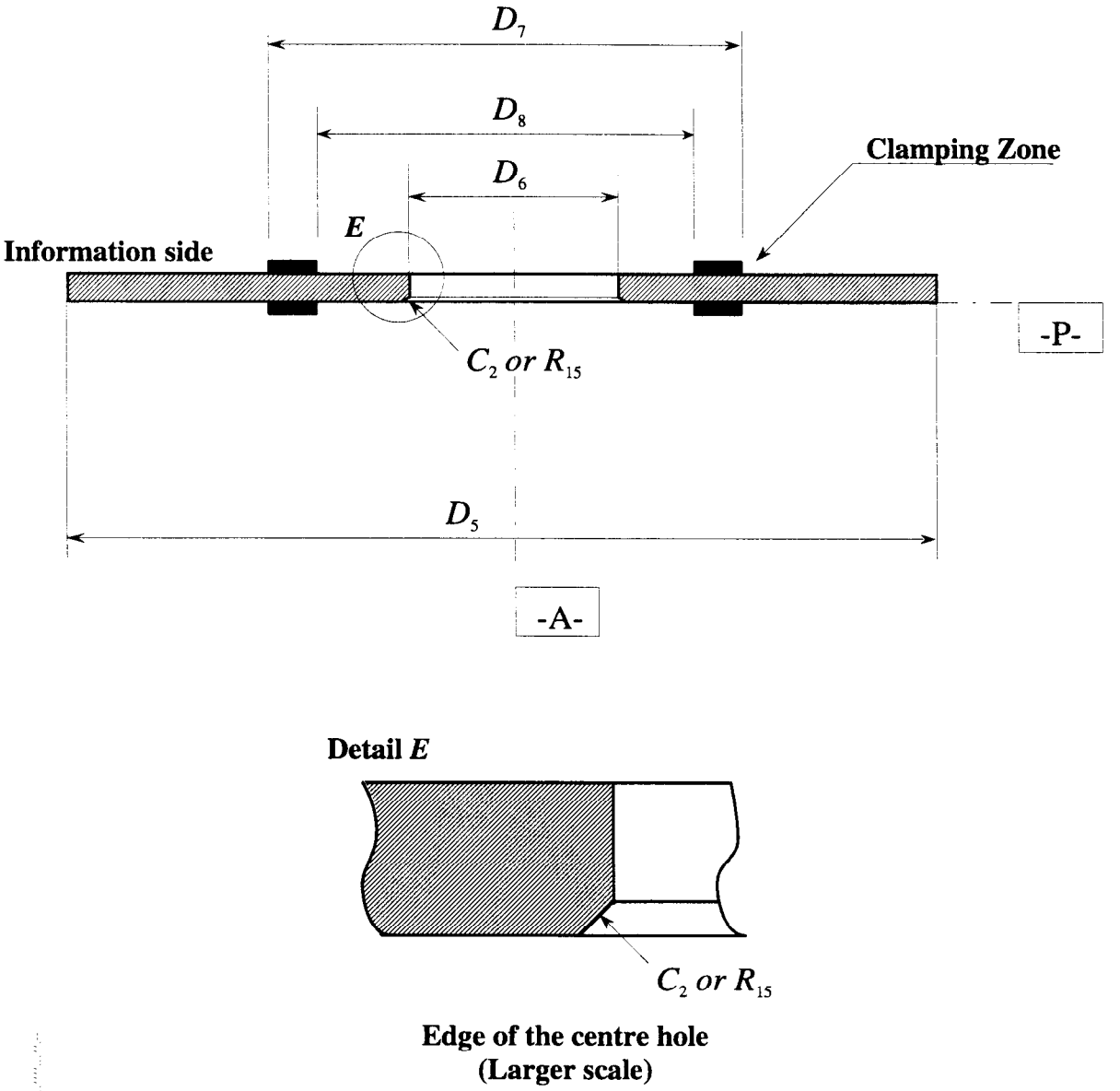

Figure 13 - Dimensions of the disk, Clamping Zone and edge shape of the centre hole

Copyright International Organization for Standardization
Provided by IHS under license with ISO
No reproduction or networking permitted without license from IHS
Not for Resale

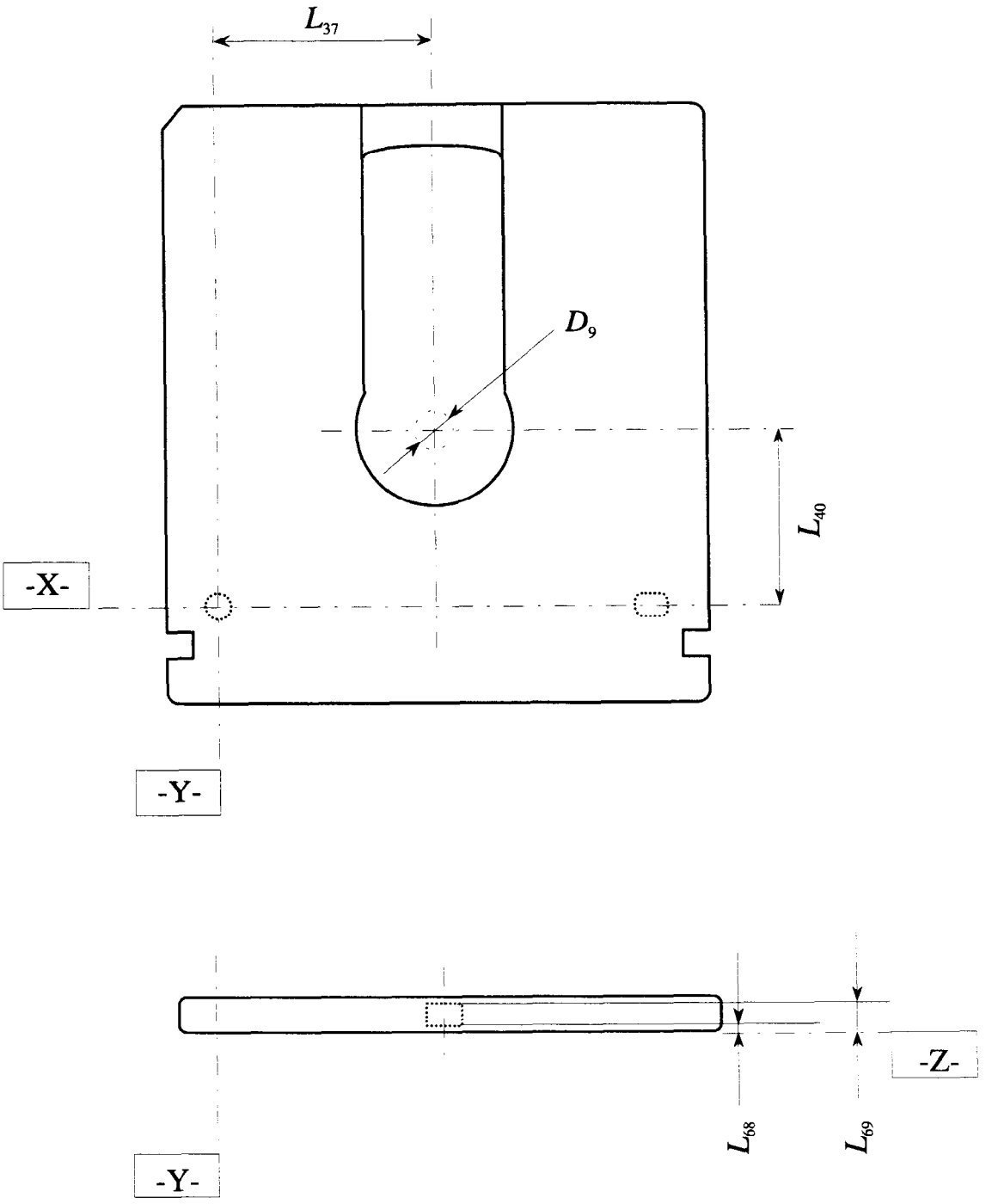

Figure 14 - Capture cylinder

Copyright International Organization for Standardization
Provided by IHS under license with ISO
No reproduction or networking permitted without license from IHS
Not for Resale

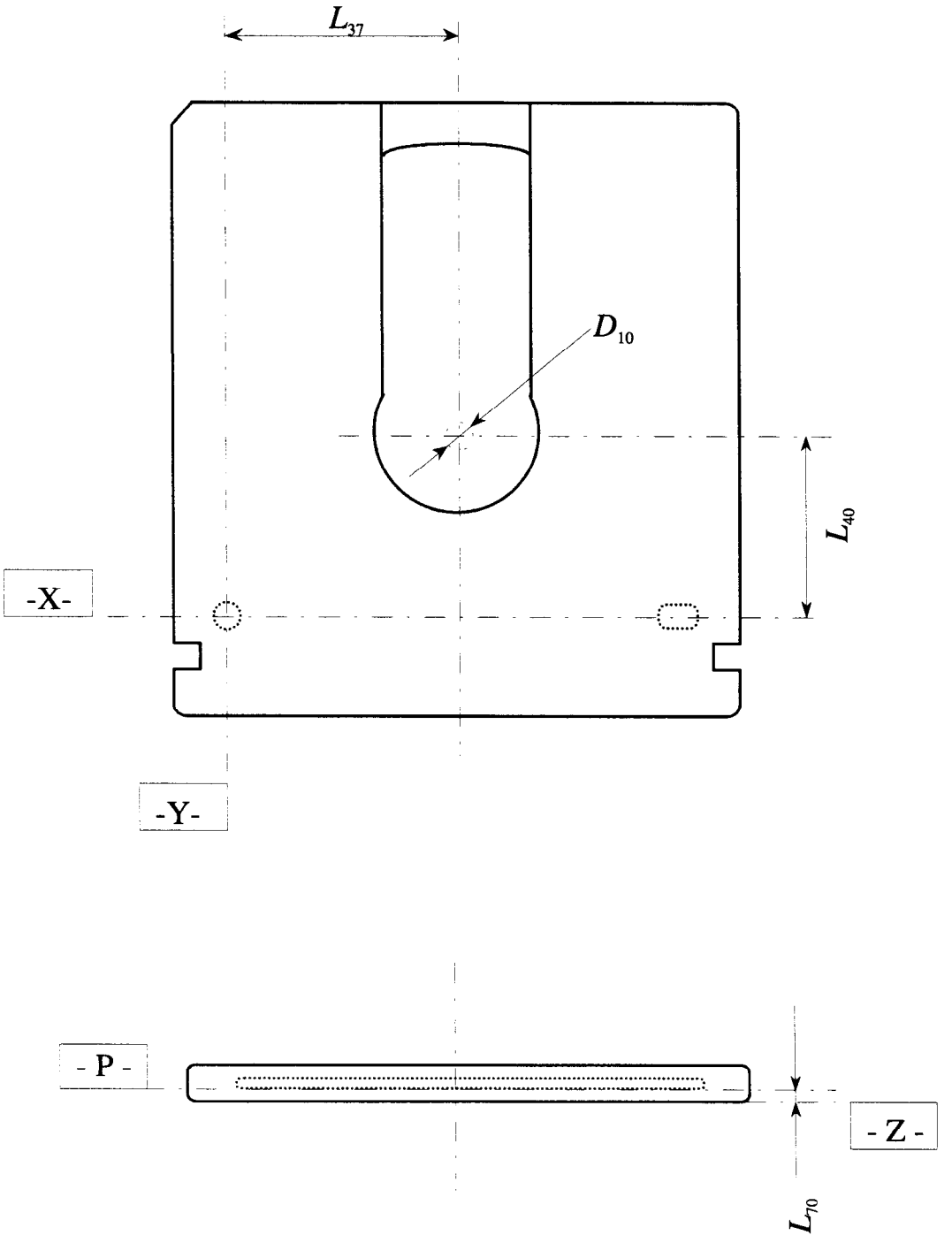

Figure 15 - Disk position in the operating condition

Copyright International Organization for Standardization
Provided by IHS under license with ISO
No reproduction or networking permitted without license from IHS
Not for Resale

Section 3 - Format of information

13 Geometry of physical tracks

13.1 Physical track shape

The Information Zone shall contain tracks intended for the Continuous Composite Servo tracking method.

A physical track defined in 14.2.5 consists of a land-groove-land combination, where each land is shared with a neighbouring physical track. A groove is a trench-like feature, the bottom of which is located nearer to the entrance surface than the land. The centre of the physical track, i.e. where the recording is made, is the centre of the groove. The grooves shall be continuous, except for Header fields and ODFs defined in 16.5 and 16.7. The shape of the groove is determined by the requirements in clause 21.

Each physical track shall form a 360° turn of a continuous spiral.

13.2 Direction of rotation

The disk shall rotate counter-clockwise as viewed from the optical head. The track shall spiral inward from the outer diameter to the inner diameter.

13.3 Physical track pitch

The physical track pitch is the distance between adjacent physical track centrelines, measured in a radial direction. It shall be 1,20 µm ± 0,08 µm except in a Control Zone and the transition zone between the Control Zone and Inner Test Zone for drives defined in 14.2.4. The physical track pitch in the Control Zone shall be 1,60 µm ± 0,10 µm.

The width of a band of 27 200 physical tracks shall be 32,64 mm ± 0,10 mm.

13.4 Addressable track number

Each addressable track shall be identified by a track number.

Track 0 shall be the first addressable track of the Data Zone. It shall be located at a radius of 57,64 mm ± 0,10 mm.

The track numbers of addressable tracks located at radii smaller than that of track 0 shall be increased by 1 for each addressable track.

The track numbers of addressable tracks located at radii larger than that of track 0 shall be negative, and decrease by 1 for each addressable track. Their value is given in the ID field in TWO's complement, thus track −1 is indicated by (FFFF).

14 Format of the Information Zone

14.1 General description of the Information Zone

The Information Zone shall contain all information on the disk relevant for data interchange. The information comprises embossed tracking provisions, embossed headers, embossed data and, where applicable, user-written data. In this clause, the term 'data' is reserved for the content of the data field of a sector, which, in general, is transferred to the host. This clause defines the layout of the information; the characteristics of signals obtained from this information are specified in section 4.

14.2 Division of the Information Zone

The Information Zone shall be divided in three parts: a Lead-in Zone, a Data Zone and a Lead-out Zone. The Data Zone is intended for the recording of user data. The Lead-in and Lead-out Zones contain control information for the drive and zones for performing tests by the disk manufacturer or drive.

The division of the Information Zone shall be as given in table 2. The radii of a zone in the table are the nominal values of the radius of the centre of the first addressable track and of the radius of the centre of the last addressable track of the zone. The tolerance on the outer radius of the Data Zone is specified in 13.4; the tolerance on other radii is determined by the tolerance on the track pitch as specified in 13.3.

Copyright International Organization for Standardization
Provided by IHS under license with ISO
No reproduction or networking permitted without license from IHS Not for Resale

Table 2 - Layout of the Information Zone

	Nominal radius (start to end) (mm)	Number of physical tracks and sectors	Number of sectors per physical track	Number of address-able tracks	Number of sectors per address-able track	Addressable track number (decimal value)
Lead-in Zone						
Initial Zone	58,64 to 57,87	640	66	660	64	- 858 to -199
Outer Test Zone						
for drives	57,87 to 57,79	64	66	66	64	- 198 to -133
for manufacturers	57,79 to 57,72	64	66	66	64	- 132 to - 67
for servo	57,72 to 57,64	64	66	66	64	- 66 to - 1
Blank track		6 + 52s		7		- 66 to - 60
3T track		9 + 46s		10		- 59 to - 50
Blank track		5 + 54s		6		- 49 to - 44
8T track		9 + 46s		10		- 43 to - 34
Blank track		32		33		- 33 to -1
Data Zone						
Band 0	57,64 to 54,38	2 720	66	2 805	64	0 to 2 804
Band 1	54,38 to 51,11	2 720	62	2 635	64	2 805 to 5 439
Band 2	51,11 to 47,85	2 720	58	2 465	64	5 440 to 7 904
Band 3	47,85 to 44,58	2 720	54	2 295	64	7 905 to 10 199
Band 4	44,58 to 41,32	2 720	50	2 125	64	10 200 to 12 324
Band 5	41,32 to 38,06	2 720	46	1 955	64	12 325 to 14 279
Band 6	38,06 to 34,79	2 720	42	1 785	64	14 280 to 16 064
Band 7	34,79 to 31,53	2 720	38	1 615	64	16 065 to 17 679
Band 8	31,53 to 28,26	2 720	34	1 445	64	17 680 to 19 124
Band 9	28,26 to 25,00	2 720	30	1 275	64	19 125 to 20 399
Lead-out Zone						
Inner Test Zone						
for servo	25,00 to 24,88	96	30	45	64	20 400 to 20 444
Blank Track		53 + 10s		25		20 400 to 20 424
3T Track		17 + 2s		8		20 425 to 20 432
Blank Track		4 + 8s		2		20 433 to 20 434
8T Track		17 + 2s		8		20 435 to 20 442
Blank Track		4 + 8s		2		20 443 to 20 444
for manufacturers	24,88 to 24,81	64	30	30	64	20 445 to 20 474
for drives	24,81 to 24,73	64	30	30	64	20 475 to 20 504
Control Zone	24,73 to 22,68	1 280	30	600	64	20 505 to 21 104

14.2.1 Initial Zone

The Initial Zone is intended to enable the drive to get the position of the optical head when it moves beyond the Data Zone. It shall have embossed grooves, Headers, and ODFs with same format, same reflectivity and same signal characteristics as those in the Data Zone defined in clauses 15, 16, 21 and 22. This zone shall not be used for data or test recording.

14.2.2 Test Zones for drives and manufacturers

There shall be two Test Zones for drives and two Test Zones for manufacturers located in Lead-in Zone and Lead-out Zone respectively. These Test Zones shall contain embossed grooves, Headers, ODFs and the Recording fields.

The Test Zones for drives are intended for tests to enable a drive to set its write power, and shall not consist of embossed data in the case of rewritable disks. The tracks used for testing should be chosen from the Test Zone in a random way, so as to ensure a gradual degradation of the entire Test Zones for drives due to use. Then each track in this zone will remain representative for the characteristics of tracks in the Data Zone of the disk.

Copyright International Organization for Standardization
Provided by IHS under license with ISO
No reproduction or networking permitted without license from IHS Not for Resale

The Test Zones for manufacturers are intended for quality tests by the media manufacturer. The Test Zones for drives shall not be used for such tests, as they can cause serious degradation of the Test Zones.

14.2.3 Test Zones for servo

There shall be two Test Zones for servo located in Lead-in Zone and Lead-out Zone respectively. Each Test Zone for servo has three kinds of different tracks. They are blank tracks, 3T tracks and 8T tracks, where T is the period of one Channel bit.

Blank tracks shall contain embossed grooves, Headers, ODFs and the Recording fields.

The 3T tracks shall contain embossed grooves, Headers, ODFs and embossed marks which is formed over VFO_3 fields, Sync fields and Data fields of the Recording fields of each sector defined in clause 16. The embossed marks in the 3T tracks shall be formed as a series of repeated Channel bit pattern 100100100.... .

The 8T tracks shall contain embossed grooves, Headers, ODFs and embossed marks which is formed over VFO_3 fields, Sync fields and Data fields of the Recording fields of each sector defined in clause 16. The embossed marks in the 8T tracks shall be formed as a series of repeated Channel bit pattern 10000000100000001000000100... .

These tracks are intended to enable a drive to remove focus offsets by maximising the read signal from the Channel bit pattern.

14.2.4 Control Zone

There shall be a Control Zone located in the innermost area of the Lead-out Zone. The Control Zone shall contain 1 280 physical tracks with embossed grooves, ODFs and sectors formatted according to clause 16.

The physical track pitch in the Control Zone and the other zones on the disk are different. The outer area of the Control Zone shall be a transition zone from narrower track pitch zone to wider track pitch zone which has 1,60 µm track pitch as defined in 13.3. The width of the transition zone shall be less than 20 µm.

The Data fields of all sectors in the Control Zone shall be identical, and contain embossed Control data for the drive. The Control data in a Data field is specified in annex E.

14.2.5 Data Zone

The Data Zone shall contain embossed grooves, ODFs and Headers. The Recording fields can be user-written or contain embossed data, in the format of clause 16. The layout of the Data Zone is specified in clause 18. The Data Zone shall be divided into 10 bands numbered 0 to 9. Each band shall consist of the same number of physical tracks. A physical track shall be the path followed by the focused optical beam during one revolution of the disk. Each physical track shall be divided into sectors. The number of sectors per physical track shall be as shown in table 2 and decreases from band to band moving from the outer radius to the inner radius so as to keep the recording density constant in any band.

Each sector of an addressable track shall be identified by a track and sector address in its Header field . The sector and addressable track address shall be applied to the track which is defined separately from the physical track and has same number of sectors. The number of sectors per addressable track shall be as shown in table 2 and be constant in any track. The number of addressable tracks per band shall decrease from band to band moving from the outer radius to the inner radius as shown in table 2. The Data Zone shall start with track 0 and end with track 20 399.

15 Addressable track format

15.1 Addressable track layout

On each addressable track there shall be 64 sectors.

Each sector shall comprise 746 bit combinations, where each bit combination on the disk is represented by 16 Channel bits. The sectors shall be equally spaced over a track in such a way that the distance between the first Channel bit of a sector and the first Channel bit of the next sector shall be 11 936 Channel bits ± 3 Channel bits.

15.2 Clock frequencies and periods

The nominal clock frequency and period of a Channel bit for each data band at the rotational speed of 33,8 Hz is different in each band and shown in table 3 below. These values are for reference only. The actual frequency and period shall be adjusted so that there is the correct number of Channel bits in one physical track by the formula below.

$(66 - (4 \times \text{Data Band Number})) \times 16 \times 746$

where 16 is the number of Channel bits representing a bit combination and 746 is the number of bit combinations per sector.

Copyright International Organization for Standardization
Provided by IHS under license with ISO
No reproduction or networking permitted without license from IHS Not for Resale

Table 3 - Nominal Clock Frequencies and Periods

	Clock Frequency (MHz)	Period of a Channel bit (ns)	Period of a Byte (ns)	Period of a Sector (µs)
Lead-in Zone				
Initial Zone	26,61	37,6	601	449
Outer Test Zone				
for drives	26,61	37,6	601	449
for manufacturers	26,61	37,6	601	449
for servo	26,61	37,6	601	449
Data Zone				
Band 0	26,61	37,6	601	449
Band 1	25,00	40,0	640	477
Band 2	23,39	42,8	684	510
Band 3	21,77	45,9	735	548
Band 4	20,16	49,6	794	592
Band 5	18,55	53,9	863	644
Band 6	16,93	59,1	945	705
Band 7	15,32	65,3	1 044	779
Band 8	13,71	72,9	1 167	871
Band 9	12,10	82,7	1 323	987
Lead-out Zone				
Inner Test Zone				
for servo	12,10	82,7	1 323	987
for manufacturers	12,10	82,7	1 323	987
for drives	12,10	82,7	1 323	987
Control Zone	12,10	82,7	1 323	987

15.3 Radial alignment

The Headers of the sectors shall be radially aligned in such a way that the angular distance between the first Channel bit of sectors in adjacent tracks within each data band, Lead-in Zone or Lead-out Zone shall be less than 4 Channel bits.

15.4 Sector number

The sectors on an addressable track shall be numbered consecutively from 0 to 63.

16 Sector format

16.1 Sector layout

A sector shall comprise a Header field, an Offset Detection Field (ODF) and a Recording field in which 512 user data bytes can be recorded. The Header of each sector shall be embossed. The Recording field can be empty, user-written or embossed. The length of the sector shall be 746 bytes nominally. Tolerances allowed by 15.1 are taken up by the Buffer, i.e. the last field of the sector. The length of the Header field is 52 bytes, the length of the ODF is 2 bytes and the length of the Recording field is 692 bytes. The layout of a sector is shown in figure 16. The numbers indicate the length of each field in bytes.

Copyright International Organization for Standardization
Provided by IHS under license with ISO
No reproduction or networking permitted without license from IHS
Not for Resale

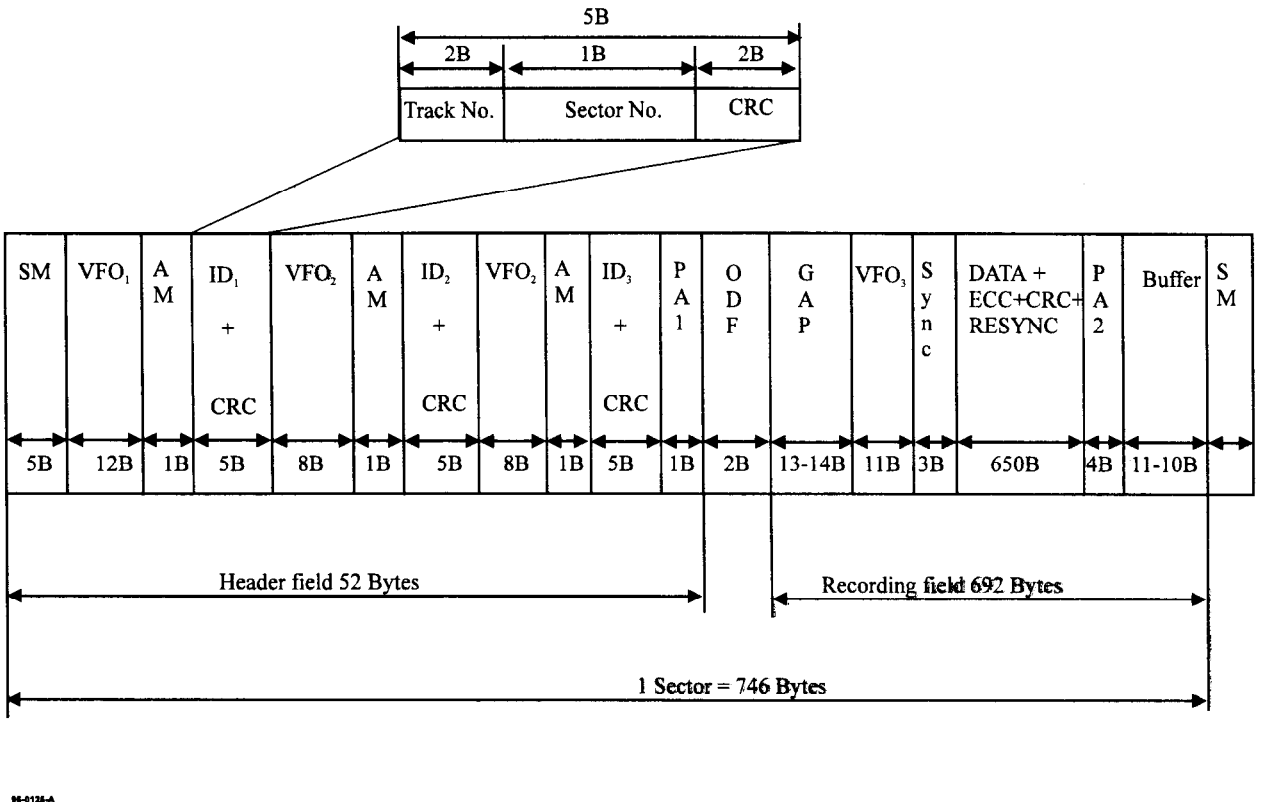

Figure 16 - Sector Field Layout

16.2 Sector Mark (SM)

The Sector Mark shall consist of an embossed pattern that does not occur in RLL(2,7) code (see clause 17), and is intended to enable the drive to identify the start of the sector without recourse to a phase-locked loop.

The Sector Mark shall have a length of 80 Channel bits. It shall consist of embossed, continuous long marks of different length followed by a lead-in to the VFO_1 field, formed as an interruption of the groove. The timing pattern of the Sector Mark shall be as shown in figure 17, where T is the period of one Channel bit. The signal obtained from a mark is less than a signal obtained from no mark. The Lead-in shall have the Channel bit pattern 0000010010.

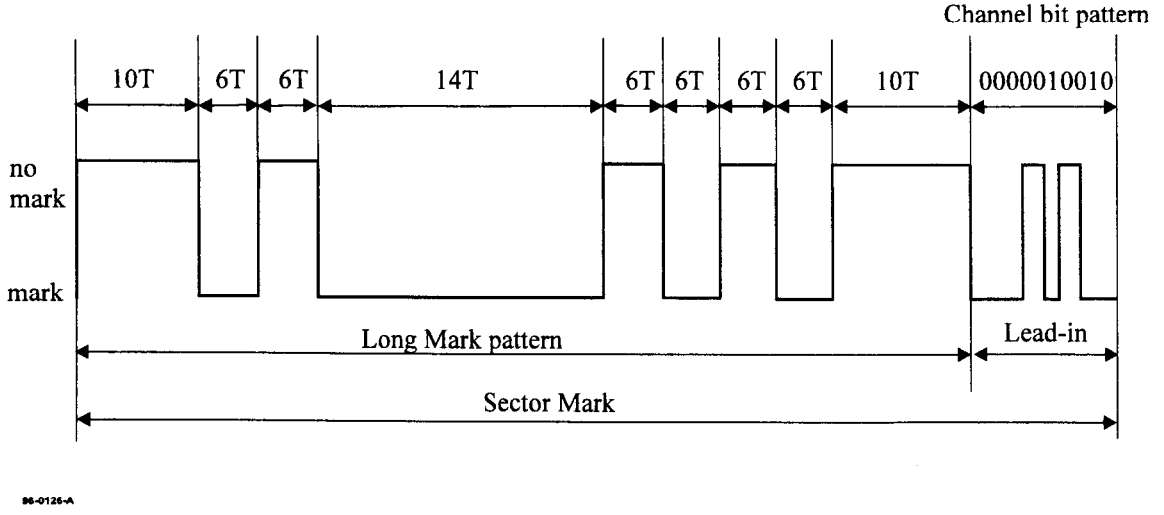

Figure 17 - Pattern of the Sector Mark

16.3 VFO fields

There shall be one embossed VFO_1 field and two embossed VFO_2 fields in the Header and one VFO_3 field in the Recording field to give the voltage-frequency oscillator of the phase-locked loop of the read Channel bit synchronization. VFO_1 shall have

Copyright International Organization for Standardization
Provided by IHS under license with ISO
No reproduction or networking permitted without license from IHS
Not for Resale

a length of 192 Channel bits, both VFO_2 shall have a length of 128 Channel bits and VFO_3 shall have a length of 176 Channel bits. The start of VFO_2 depends on the contents of the preceding ID field because of the closure required for the RLL(2,7) recording code. Therefore, VFO_2 shall be the appropriate one of two patterns differing only in the first Channel bit.

The continuous Channel bit pattern for the VFO fields shall be

VFO_1, 192 Channel bits:	0100100100100....	10010
VFO_2, 128 Channel bits:	100100100100....	10010
VFO_2, 128 Channel bits:	000100100100....	10010
VFO_3, 176 Channel bits:	100100100100....	10010.

16.4 Address Mark (AM)

The Address Mark shall consist of an embossed pattern that does not occur in RLL(2,7) code. The field is intended to give the drive byte synchronization for the following ID field. It shall have a length of 16 Channel bits with the following pattern:

0100 1000 0000 0100.

16.5 ID fields

The three ID fields shall each contain the address of the sector, i.e. the track number and the sector number of the sector, and CRC bytes. Each field shall consist of five bytes with the following embossed contents:

1st and 2nd byte	MSB, LSB of the addressable track number
3rd byte	
bits 7 and 6	00 shall indicate the ID_1 field 01 shall indicate the ID_2 field 10 shall indicate the ID_3 field
bits 5 to 0	sector number in binary notation
4th and 5th byte	CRC field containing the CRC bits computed over the first three bytes according to annex C.

16.6 Postamble 1 (PA1)

The Postamble 1 field shall be equal in length to 16 Channel bits and shall follow ID_3. A Postamble 1 allows closure of the last byte of the preceding CRC as required by the RLL(2,7) recording code (see clause 17). The Postamble 1 is necessary to be able to start the following ODF in a predictable manner.

16.7 Offset Detection Field (ODF)

This field shall be an area equal in length to 32 Channel bits. This field shall have neither embossed groove nor embossed mark.

16.8 Gap

The Gap shall be a field with a nominal length of 208 to 224 Channel bits. The nominal length of the Gap varies randomly to shift the position of the marks formed in the Recording field. The variation of the nominal length shall be compensated by the nominal length of the Buffer field. The content of the Gap is not specified and shall be ignored on interchange, but shall not be embossed. It is the first field of the Recording field, and gives the drive some time for processing after it has finished reading the header and before it has to write or read the VFO_3 field.

The length of the Gap has a tolerance of ±8 Channel bits, i.e. the following VFO_3 field can start between 200 and 232 Channel bits after the ODF. Moreover, it need not start exactly on a Channel bit position as extrapolated from the Header. The tolerance is subtracted from the length of the Buffer field, e.g. a Gap length of 232 Channel bits results in a reduction of the Buffer length by 24 Channel bits.

16.9 Sync

The Sync field is intended to allow the drive to obtain byte synchronization for the following Data field. It shall have a length of 48 Channel bits and be recorded with the Channel bit pattern

0100 0010 0100 0010 0010 0010 0100 0100 1000 0010 0100 1000.

16.10 Data field

The Data field is intended for recording user data. It shall have a length of 650 bytes and shall comprise

Copyright International Organization for Standardization
Provided by IHS under license with ISO
No reproduction or networking permitted without license from IHS Not for Resale

- 512 bytes of user data
- 4 bytes of which the contents are not specified by this International Standard and shall be ignored in interchange
- 10 bytes set to (FF)
- 4 bytes of CRC
- 80 bytes of ECC, and
- 40 bytes for resynchronization

The disposition of these bytes in the Data field with their five-way interleave and the contents of CRC, ECC and resynchronization shall be as specified in annex D.

16.10.1 User data bytes

The user data bytes are at the disposal of the user for recording information.

16.10.2 CRC and ECC bytes

The Cyclic Redundancy Check (CRC) bytes and Error Correction Code (ECC) bytes are used by the error detection and correction system to rectify erroneous data. The ECC is a Reed-Solomon code of degree 16. The bytes shall be as specified in annex D.

16.10.3 Resync bytes

The Resync bytes enable a drive to regain byte synchronization after a large defect in the Data field. Their content and location in the Data field shall be as specified in annex D.

16.10.4 Postamble 2 (PA2)

The Postamble 2 field shall be equal in length 64 Channel bits. This field shall follow the Data field. A Postamble 2 allows closure of the last byte of the preceding Data field as required by the RLL(2,7) recording code (see clause 17). This field may include additional data pattern which is not specified in this International Standard and shall be ignored in interchange. The Postamble 2 is necessary to be able to start the following Buffer field in a predictable manner.

16.11 Buffer field

The Buffer field shall have a nominal length of 160 to 176 Channel bits compensating the variation of the nominal length of the Gap field with a tolerance of ± 16 Channel bits and shall not contain any data. The tolerance is needed for four reasons. Firstly, the tolerance on the Header-to-Header distance as specified in 15.1. Secondly, the tolerance in the start of the VFO_3 field as specified in 16.8. Thirdly, the actual length of the written data, as determined by the runout of the track and the speed variations of the disk during writing of the data. Fourthly, overwriting these entire written data whose length has the tolerance explained above.

17 Recording code

The 8-bit bytes in the three ID fields and in the Data field, except for the Resync bytes, shall be converted to Channel bits on the disk according to table 4. All other fields in a sector have already been defined in terms of Channel bits. Each ONE Channel bit shall be recorded as a mark produced by a write pulse of the appropriate power and width.

The recording code used to record all data in the Information Zone on the disk shall be the run-length limited code known as RLL(2,7).

Copyright International Organization for Standardization
Provided by IHS under license with ISO
No reproduction or networking permitted without license from IHS
Not for Resale

Table 4 - Conversion of Input bits to Channel bits

Input bits	Channel bits
10	0100
010	100100
0010	00100100
11	1000
011	001000
0011	00001000
000	000100

The coding start at the first bit of the first byte of the field to be converted. After a Resync byte the RLL(2,7) coding shall start again with the first bit of the next byte of input data.

The RLL(2,7) coding can seldom be terminated at the end of the last input byte in a field, due to leftover bits which cannot be converted on their own. To achieve closure of the recording code, three pad bits are added at the end of field before converting the data to Channel bits. Table 5 defines the closure for all possible combinations of leftover bits.

The $ID_1$and ID_2 fields shall lead to one of the two patterns for the VFO_2 (table 5a).

The bytes in the Data field preceding a Resync byte shall lead to the Resync pattern (table 5b).

With the exception of providing a suitable closure pattern for the ID_3 field and the last byte in the Data field, the contents of the PA1 field following the ID_3 field and the contents of the PA2 field following the last byte in the Data field, respectively, are not specified by this International Standard and shall be ignored in interchange.

Table 5a - Transition from the end of the ID_1 and ID_2 field to the VFO_2 field

Leftover input bits	Pad bits	Channel bits of the closure pattern, leading to one of the two VFO_2 patterns	
none	010		100100100100100100.....10010
0	010	00	100100100100100100.....10010
1	010	01	000100100100100100.....10010
00	010	0001	000100100100100100.....10010
01	010	1001	000100100100100100.....10010
001	010	001001	000100100100100100.....10010
End of the ID field ⟶		End of the ID field →	⟵ VFO_2 field ⟶

Copyright International Organization for Standardization
Provided by IHS under license with ISO
No reproduction or networking permitted without license from IHS
Not for Resale

Table 5b - Transition from the byte in the Data field preceding a Resync to the Resync byte

Leftover input bits	Pad bits	Channel bits of the closure pattern, leading to the Resync pattern	
none	011		0010000000100100
0	011	00	0010000000100100
1	011	01	0010000000100100
00	011	0001	0010000000100100
01	011	1001	0010000000100100
001	011	001001	0010000000100100
End of the Data field →		End of the Data field →	←——— Resync ———→

18 Format of the Data Zone

The Data Zone shall contain four Defect Management Areas (DMAs), two at the beginning of the zone after the two Buffer tracks in the Data Zone specified in 18.1 and two at the end of the zone before the two Buffer tracks shown in table 6. The area between the two sets of DMAs is called the User Area. The User Area is intended for the user to write data into. The Rewritable Zone is the User Area for Type R/W disks. The Write Once Zone is the User Area for Type WORM disks. The data field of all sectors in these zones shall not contain any embossed data.

The User Area shall be interrupted by the Buffer tracks at each Band boundary as specified in 18.1. The layout of the Data Zone and adjacent zones is shown in table 7a and table 7b.

For Type R/W disks, the Rewritable Zone shall extend from sector 0 of track 5 to the last sector of track 20 394. Each band shall start and end with two Buffer tracks, see 18.1 and table 7a, and be recorded in bytes 6 to 15 of the DDS as being rewritable.

For the Type WORM disks, the Write Once Zone shall extend from sector 0 of track 135 to the last sector of track 20 264. Each band shall start and end with two Buffer tracks, see 18.1 and table 7b, and be recorded in bytes 6 to 15 of the DDS as being write once.

Copyright International Organization for Standardization
Provided by IHS under license with ISO
No reproduction or networking permitted without license from IHS Not for Resale

Table 6 - Layout of rewritable (Type R/W) disk and write once (Type WORM) disk

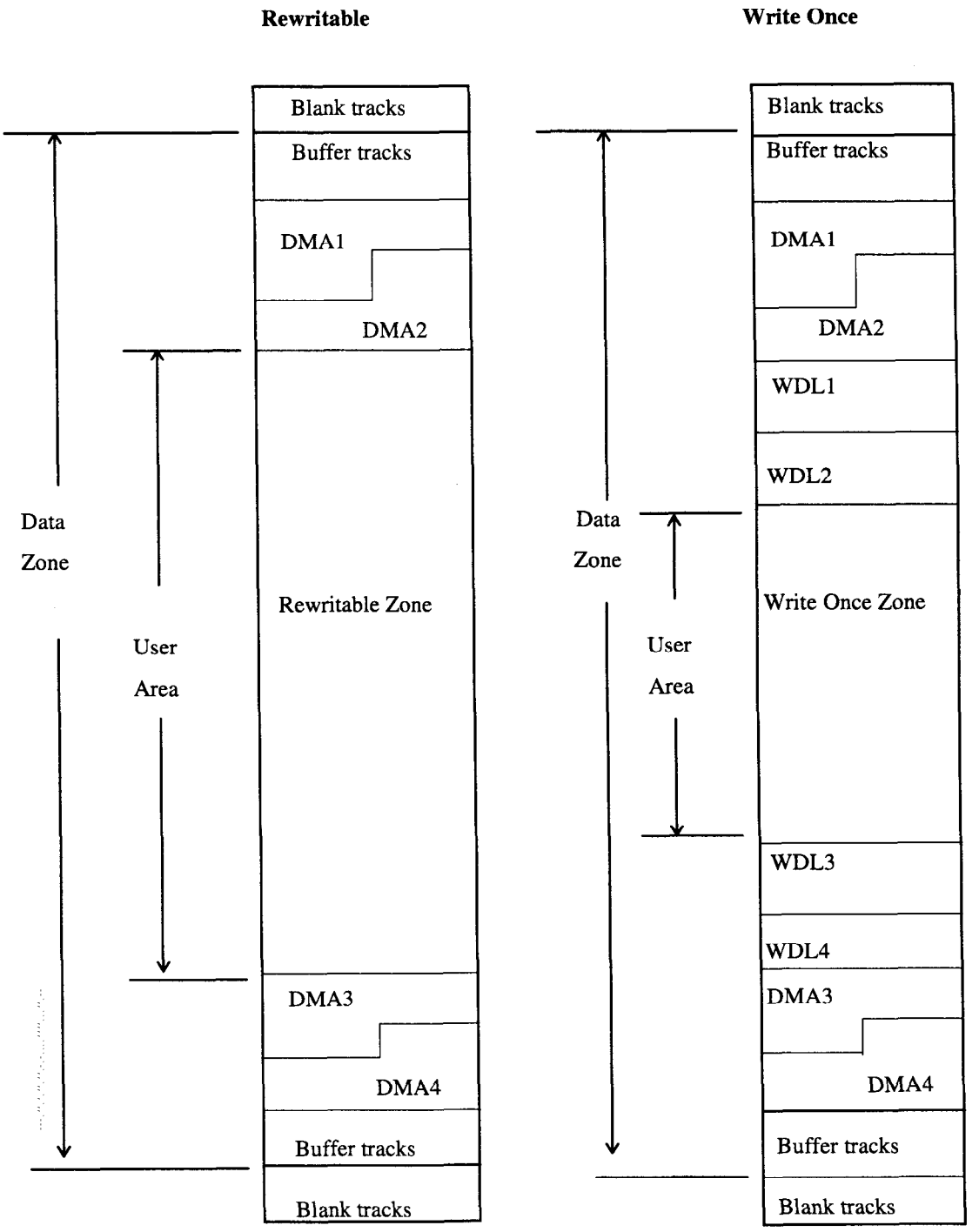

Copyright International Organization for Standardization
Provided by IHS under license with ISO
No reproduction or networking permitted without license from IHS
Not for Resale

Table 7a - Layout of the Data Zone and the Buffer tracks of rewritable (Type R/W) disk

Data Zone

User Area

Band	Track	Addressable track / sector address	Number of user sectors	Number of spare sectors	Number of other sectors
Band 0	Buffer	0/0 to 1/63			128
	DMA1	2/0 to 3/31			96
	DMA2	3/32 to 4/63			96
	User	5/0 to 2 793/63	178 496		
	Spare	2 794/0 to 2 802/63		576	
	Buffer	2 803/0 to 2 804/63			128
Band 1	Buffer	2 805/0 to 2 806/63			128
	User	2 807/0 to 5 429/63	167 872		
	Spare	5 430/0 to 5 437/63		512	
	Buffer	5 438/0 to 5 439/63			128
Band 2	Buffer	5 440/0 to 5 441/63			128
	User	5 442/0 to 7 894/63	156 992		
	Spare	7 895/0 to 7 902/63		512	
	Buffer	7 903/0 to 7 904/63			128
Band 3	Buffer	7 905/0 to 7 906/63			128
	User	7 907/0 to 10 190/63	146 176		
	Spare	10 191/0 to 10 197/63		448	
	Buffer	10 198/0 to 10 199/63			128
Band 4	Buffer	10 200/0 to 10 201/63			128
	User	10 202/0 to 12 315/63	135 296		
	Spare	12 316/0 to 12 322/63		448	
	Buffer	12 323/0 to 12 324/63			128
Band 5	Buffer	12 325/0 to 12 326/63			128
	User	12 327/0 to 14 271/63	124 480		
	Spare	14 272/0 to 14 277/63		384	
	Buffer	14 278/0 to 14 279/63			128
Band 6	Buffer	14 280/0 to 14 281/63			128
	User	14 282/0 to 16 056/63	113 600		
	Spare	16 057/0 to 16 062/63		384	
	Buffer	16 063/0 to 16 064/63			128
Band 7	Buffer	16 065/0 to 16 066/63			128
	User	16 067/0 to 17 672/63	102 784		
	Spare	17 673/0 to 17 677/63		320	
	Buffer	17 678/0 to 17 679/63			128
Band 8	Buffer	17 680/0 to 17 681/63			128
	User	17 682/0 to 19 117/63	91 904		
	Spare	19 118/0 to 19 122/63		320	
	Buffer	19 123/0 to 19 124/63			128
Band 9	Buffer	19 125/0 to 19 126/63			128
	User	19 127/0 to 20 390/63	80 896		
	Spare	20 391/0 to 20 394/63		256	
	DMA3	20 395/0 to 20 396/31			96
	DMA4	20 396/32 to 20 397/63			96
	Buffer	20 398/0 to 20 399/63			128
Total			1 298 496	4 160	2 944

Copyright International Organization for Standardization
Provided by IHS under license with ISO
No reproduction or networking permitted without license from IHS
Not for Resale

Table 7b - Layout of the Data Zone and the Buffer tracks of write once (Type WORM) disk

Band	Track	Addressable track / sector address	Number of user sectors	Number of spare sectors	Number of other sectors
Band 0	Buffer	0/0 to 1/63			128
	DMA1	2/0 to 3/31			96
	DMA2	3/32 to 4/63			96
	WDL1	5/0 to 69/63			4 160
	WDL2	70/0 to 134/63			4 160
	User	135/0 to 2 793/63	170 176		
	Spare	2 794/0 to 2 802/63		576	
	Buffer	2 803/0 to 2 804/63			128
Band 1	Buffer	2 805/0 to 2 806/63			128
	User	2 807/0 to 5 429/63	167 872		
	Spare	5 430/0 to 5 437/63		512	
	Buffer	5 438/0 to 5 439/63			128
Band 2	Buffer	5 440/0 to 5 441/63			128
	User	5 442/0 to 7 894/63	156 992		
	Spare	7 895/0 to 7 902/63		512	
	Buffer	7 903/0 to 7 904/63			128
Band 3	Buffer	7 905/0 to 7 906/63			128
	User	7 907/0 to 10 190/63	146 176		
	Spare	10 191/0 to 10 197/63		448	
	Buffer	10 198/0 to 10 199/63			128
Band 4	Buffer	10 200/0 to 10 201/63			128
	User	10 202/0 to 12 315/63	135 296		
	Spare	12 316/0 to 12 322/63		448	
	Buffer	12 323/0 to 12 324/63			128
Band 5	Buffer	12 325/0 to 12 326/63			128
	User	12 327/0 to 14 271/63	124 480		
	Spare	14 272/0 to 14 277/63		384	
	Buffer	14 278/0 to 14 279/63			128
Band 6	Buffer	14 280/0 to 14 281/63			128
	User	14 282/0 to 16 056/63	113 600		
	Spare	16 057/0 to 16 062/63		384	
	Buffer	16 063/0 to 16 064/63			128
Band 7	Buffer	16 065/0 to 16 066/63			128
	User	16 067/0 to 17 672/63	102 784		
	Spare	17 673/0 to 17 677/63		320	
	Buffer	17 678/0 to 17 679/63			128
Band 8	Buffer	17 680/0 to 17 681/63			128
	User	17 682/0 to 19 117/63	91 904		
	Spare	19 118/0 to 19 122/63		320	
	Buffer	19 123/0 to 19 124/63			128
Band 9	Buffer	19 125/0 to 19 126/63			128
	User	19 127/0 to 20 260/63	72 576		
	Spare	20 261/0 to 20 264/63		256	
	WDL3	20 265/0 to 20 329/63			4 160
	WDL4	20 330/0 to 20 394/63			4 160
	DMA3	20 395/0 to 20 396/31			96
	DMA4	20 396/32 to 20 397/63			96
	Buffer	20 398/0 to 20 399/63			128
Total			1 281 856	4 160	19 584

Data Zone

User Area

Copyright International Organization for Standardization
Provided by IHS under license with ISO
No reproduction or networking permitted without license from IHS
Not for Resale

18.1 Buffer tracks in the Data Zone

The two tracks at the beginning of each band and the two tracks at the end of each band of the Data Zone shall be Buffer tracks. The Buffer tracks shall contain embossed grooves, ODFs and Headers, and shall not be used for the user data. The sectors of the Buffer tracks of rewritable disks and write once disks shall not contain data or embossed data in the Recording field.

18.2 Defect Management Areas (DMAs)

The four Defect Management Areas contain information on the structure of the Data Zone and on the defect management. The length of each DMA shall be 96 sectors. Two of the DMAs, DMA1 and DMA2, shall be located near the outer diameter of the disk; two others, DMA3 and DMA4, shall be located near the inner diameter of the disk. The boundaries of the DMAs are indicated in table 7a and table 7b.

Each DMA shall contain a Disk Definition Structure (DDS), a Defect Management Sector (DMS), a Primary Defect List (PDL), and a Secondary Defect List (SDL). The contents of the four DDSs, the content of the four PDLs and the contents of the four SDLs shall be identical. The differences between the contents of the four DMSs shall be the pointers to each associated PDLs and SDLs.

After initialization of the disk, each DMA shall have the following content:

- The first DMA sector shall contain the DDS
- The second DMA sector shall contain the DMS
- The third DMA sector shall primarily be the first sector of the PDL for rewritable disks and write once disks
- The SDL shall primarily be located immediately after the PDL for rewritable disks and write once disks
- The positions of PDLs and SDLs might be slipped to the next sector from the primarily defined sector depending on the defect condition of the sectors
- The accurate position of the PDLs and SDLs shall be defined in the DMS

The lengths of the PDL and SDL are determined by the number of entries in each.

The contents of the DDS and DMS are specified in 18.3 and 18.4; those of the PDL and SDL are specified in 19.5 and 19.6.

18.3 Disk Definition Structure (DDS)

The DDS shall consist of a table with a length of one sector. It specifies the method of initialization of the disk, the division of the Rewritable and the Write Once Zones into groups, the kind of user sectors within each band. The DDS shall be recorded in the first sector of each DMA at the end of initialization of the disk. The information on the disk structure given in table 8 shall be recorded in each of the four DDSs.

In the table 8, for bytes 6 to 15, the setting (01) means rewritable data group, the setting (02) means write once data group and the other setting shall be ignored in this International Standard.

Copyright International Organization for Standardization
Provided by IHS under license with ISO
No reproduction or networking permitted without license from IHS Not for Resale

Table 8 - Byte assignment of the Disk Definition Structure (DDS)

Byte No.	Description	Setting
0	DDS Identifier	(50)
1	DDS Identifier	(44)
2	Reserved	(00)
3	Disk has been certified	(01)
	Disk has not been certified	(02)
4	Reserved	(00)
5	Number of bands	(0A)
6	Band 0 Type (rewritable/write once)	(01)/(02)
7	Band 1 Type (rewritable/write once)	(01)/(02)
8	Band 2 Type (rewritable/write once)	(01)/(02)
9	Band 3 Type (rewritable/write once)	(01)/(02)
10	Band 4 Type (rewritable/write once)	(01)/(02)
11	Band 5 Type (rewritable/write once)	(01)/(02)
12	Band 6 Type (rewritable/write once)	(01)/(02)
13	Band 7 Type (rewritable/write once)	(01)/(02)
14	Band 8 Type (rewritable/write once)	(01)/(02)
15	Band 9 Type (rewritable/write once)	(01)/(02)
16 to 511	Reserved	(00)

18.4 Defect Management Sector (DMS)

The DMS shall consist of a table with a length of one sector. It specifies the location of the PDLs and the SDLs. The DMS shall be recorded in the second sector of each DMA at the end of initialization of the disk. The information of the location of the PDLs and the SDLs given in table 9 shall be recorded in each of the four DMSs. The addresses of the PDL sectors and the SDL sectors shall be listed in ascending order respectively in the DMS. Each addresse of the PDL sectors and the SDL sectors in the DMS sector may not be continuous numbers depending on the defect condition of the sectors. The PDL sectors and the SDL sectors shall be used according to the order of the address list registered in the DMS sector.

The number of SDL entries shall be set to (FF) and the address of only first SDL sector shall be registered in the write once disk.

Copyright International Organization for Standardization
Provided by IHS under license with ISO
No reproduction or networking permitted without license from IHS Not for Resale

Table 9 - Byte assignment of the Defect Management Sector (DMS)

Byte No.	Description	Setting
0	DMS Identifier	(44)
1	DMS Identifier	(4D)
2 to 5	Reserved	(00)
6	PDL Identifier	(01)
7	Number(x) of PDL Sectors	[1≤x≤33]
8	Address of the first PDL sector (Track number, MSB)	-
9	Address of the first PDL sector (Track number)	-
10	Address of the first PDL sector (Track number, LSB)	-
11	Address of the first PDL sector (Sector number)	-
:		
(4x+4)	Address of the last PDL sector (Track number, MSB)	-
(4x+5)	Address of the last PDL sector (Track number)	-
(4x+6)	Address of the last PDL sector (Track number, LSB)	-
(4x+7)	Address of the last PDL sector (Sector number)	-
(4x+8)	Reserved	(00)
(4x+9)	Reserved	(00)
(4x+10)	SDL Identifier	(02)
(4x+11)	Number(y) of SDL Sectors	[1≤y≤66 or (FF)]
(4x+12)	Address of the first SDL sector (Track number, MSB)	-
(4x+13)	Address of the first SDL sector (Track number)	-
(4x+14)	Address of the first SDL sector (Track number, LSB)	-
(4x+15)	Address of the first SDL sector, (Sector number)	-
:		
(4y+4x+8)	Address of the last SDL sector (Track number, MSB)	-
(4y+4x+9)	Address of the last SDL sector (Track number)	-
(4y+4x+10)	Address of the last SDL sector (Track number, LSB)	-
(4y+4x+11)	Address of the last SDL sector (Sector number)	-
(4y+4x+12) to 511	Reserved	(00)

18.5 Working Defect List (WDL)

The Working Defect List (WDL) is created and used only for the write once disk. The WDL contains the working defect list for creating SDL which is registered up to sector capacity. Two WDLs named WDL1 and WDL2 are located at the outermost area and two WDLs named WDL3 and WDL4 are located at the innermost area of the Data Zone. All WDLs are identical and consist of 4 160 sectors. The contents of WDLs are specified in 19.6.

18.6 Partitioning

During initialization of the disk, the User Area shall be partitioned into 10 consecutive groups. Each group shall span one complete band excluding the two Buffer tracks at the beginning and the two Buffer tracks at the end of each band with the exception of tracks 2 to 4 in band 0 and tracks 20 395 to 20 397 of band 9 in case of rewritable disk and tracks 2 to 134 in band 0 and tracks 20 265 to 20 397 of band 9 in case of write-once disk. Each group shall comprise full tracks of user sectors followed by full tracks of spare sectors. The number of spare tracks per group are shown in table 7a and table 7b.

19 Defect management

Defective sectors in the User Area shall be replaced by good sectors according to the defect management method described below. The disk shall be initialized before use. This International Standard allows initialization with or without certification. Defective sectors are handled by a Linear Replacement Algorithm and a sector Slipping Algorithm. The total number of defective sectors replaced by both algorithms shall not be greater than 4 160. The spare tracks are distributed among groups proportionally to the number of data tracks in each group as shown in table 7a and table 7b.

19.1 Initialization of the disk

During initialization of the disk, the four DMAs are recorded and four WDLs are also recorded as empty WDL in case of write once disk prior to the first use of the disk. The User Area shall be partitioned into 10 groups. Each group shall contain a number

Copyright International Organization for Standardization
Provided by IHS under license with ISO
No reproduction or networking permitted without license from IHS Not for Resale

of tracks for user sectors followed by a number of tracks for spare sectors. The spare sectors are used as replacements for defective user sectors. Initialization can include a certification of the groups whereby defective sectors are identified and skipped.

In an empty WDL, byte 3, byte 6 and byte 7 shall be set to (00) and bytes 8 to 511 shall be set to (FF).

All DDS parameters and DMS parameters shall be recorded in the four DDS and DMS sectors. The PDL and SDL shall be recorded in the four DMAs. The contents of the PDLs and SDLs are specified in tables 10, 11a and 11b, respectively.

19.2 Certification

If the disk is certified, the certification shall be applied to the user sectors and to the spare sectors in the groups. The method of certification is not stated by this International Standard. It may involve writing and reading the sectors in the groups. Defective sectors found during certification shall be handled by the Slipping Algorithm. Defective sectors shall not be used for reading or writing. Guidelines for replacing defective sectors are given in annex L.

19.2.1 Slipping Algorithm

The Slipping Algorithm shall be applied individually to each and every group in the User Area in case of certification is performed.

A defective user sector found during certification shall be replaced by the first good sector following the defective sector, and so causes a slip of one sector towards the end of the group. The last user sectors will slip into the spare sector area of the group. The address of the defective sector is written in the PDL. If no defective sectors are found during certification, an empty PDL is recorded.

The addresses of spare sectors, beyond the last user sector slipped into the spare area (if any), which are found to be defective during certification shall be recorded in the PDL. Thus, the number of available spare sectors is diminished accordingly.

If the spare sector area of a group becomes exhausted during certification, the defective sector shall be handled by the Linear Replacement Algorithm. This process involves assigning a replacement sector from the spare sector area of another group and cannot be accomplished until the other group has been certified. This is due to the fact that the next available spare sector is not known until its group is certified, i.e. the Slipping Algorithm has been applied.

19.2.2 Linear Replacement Algorithm

The Linear Replacement Algorithm is used to handle defective sectors found after certification. It is also used during certification in the event of the spare area of a group becoming exhausted.

The defective sector shall be replaced by the first available good spare sector of the group. If there are no spare sectors left in the group, the defective sector shall be replaced by the first good spare sector of another group. The addresses of the defective sector and of the replacement sector shall be recorded in the SDL.

The addresses of sectors already recorded in the PDL shall not be recorded in the SDL.

If a replacement sector listed in the SDL is later found to be defective in case of the rewritable disk, the entry in the SDL shall be rewrite with new replacement sector for that defective sector. If a replacement sector listed in the SDL is later found to be defective in case of the write once disk, the new WDL which has new entry indicating a new replacement sector for that defective sector shall be added.

19.3 Disks not certified

The Linear Replacement Algorithm is also used to handle sectors found defective on disks which have not been certified.

A defective sector shall be replaced by the first available good spare sector of the group. If there are no spare sectors left in the group, the defective sector shall be replaced by the first good spare sector of another group. The addresses of the defective sector and of the replacement sector shall be recorded in the SDL.

If there exists a list of addresses of the defective sectors in the PDL, these sectors shall be skipped for use even if the disks are not certified. This process is same as the process specified in 19.2.1 for the certified disks.

19.4 Write procedure

19.4.1 Rewritable disk

When writing data in the sectors of a group, a defective sector listed in the PDL shall be skipped, and the data shall be written in the next user sector, according to the Slipping Algorithm. If a sector to be written is listed in the SDL, the data shall be written in the spare sector pointed to by the SDL, according to the Linear Replacement Algorithm. When a defective sector is detected, it shall be registered in the SDL with the assigned spare sector and the data shall be written in the spare sector. When

Copyright International Organization for Standardization
Provided by IHS under license with ISO
No reproduction or networking permitted without license from IHS Not for Resale

the SDL is increased over the sector capacity, the next SDL sector shall be assigned and registered the next SDL sector in the DMS.

When a PDL or an SDL sector is found to be defective, it shall not be used. These defective PDL or SDL sectors shall be skipped and the next good sector shall be used. These good PDL or SDL sectors shall be registered in the DMS sector. This procedure shall be applied to the four DMAs.

19.4.2 Write once disk

When writing data in the sectors of a group, a defective sector listed in the PDL shall be skipped, and the data shall be written in the next user sector, according to the Slipping Algorithm. When a defective sector is detected, it shall be registered in the WDL with the assigned spare sector and the data shall be written in the spare sector. When the WDL is increased over the sector capacity, the new SDL sector shall be assigned and the contents of the WDL shall be registered in the new SDL sector.

When a WDL or an SDL sector is found to be defective, the WDL sector or the SDL sector shall not be used. These defective WDL or SDL sectors shall be skipped and the next good sector shall be used.

19.5 Primary Defect List (PDL)

A PDL shall always be recorded; it may be empty.

A list of defective sectors may be obtained by means other than certification of the disk.

The PDL shall contain the addresses of all defective sectors identified at initialization. The addresses shall be listed in ascending order. The PDL shall be recorded in the minimum number of sectors necessary, and it shall begin in the first user data byte of the first sector. All unused bytes of the last sector of the PDL shall be set to (FF). The information in table 10 shall be recorded in each PDL.

In the case of multiple-sector PDL, the list of addresses of the defective sectors shall continue with the first byte of the second and subsequent sectors. Thus, the PDL Identifier and the Number of PDL Sector Entries shall be present only in the first sector.

In an empty PDL, bytes 2 and 3 shall be set to (00) and bytes 4 to 511 shall be set to (FF).

Table 10 - Content of the PDL

Byte	PDL Content	Setting
0	PDL Identifier	(00)
1	PDL Identifier	(01)
2	Number (*n*) of PDL Entries, MSB	-
3	Number (*n*) of PDL Entries , LSB	-
4	Address of the First Defective Sector (Track Number, MSB)	-
5	Address of the First Defective Sector (Track Number)	-
6	Address of the First Defective Sector (Track Number, LSB)	-
7	Address of the First Defective Sector (Sector Number)	-
:	:	
(4*n*)	Address of the Last Defective Sector (Track Number, MSB)	-
(4*n*+1)	Address of the Last Defective Sector (Track Number)	-
(4*n*+2)	Address of the Last Defective Sector (Track Number, LSB)	-
(4*n*+3)	Address of the Last Defective Sector (Sector Number)	-
(4*n*+4) to 511		(FF)

19.6 Secondary Defect List (SDL) and Working Defect List (WDL)

19.6.1 Rewritable disk

The Secondary Defect List (SDL) is used in rewritable disk for handling defective sectors using Linear Replacement Algorithm.

The SDL is created during initialization and used after certification. All disks with a Rewritable Zone shall have the SDLs recorded during initialization.

The SDL shall contain entries in the form of addresses of defective user sectors and addresses of the spare sectors which replace them. Each entry in the SDL contains 8 bytes, viz. four each for the address of a defective sector and for the address of its replacement sector.

Copyright International Organization for Standardization
Provided by IHS under license with ISO
No reproduction or networking permitted without license from IHS Not for Resale

The addresses of the defective sectors shall be in ascending order.

The SDL shall be recorded in the minimum number of sector necessary, and it shall begin at the first user data byte of the first sector. All unused bytes of the last sectors of the SDL shall be set to (FF). The following information shall be recorded in each of the four SDLs ;

- SDL Identifier
- Number of SDL update
- Number of SDL Entries
- Address of defective sectors and their replacement sectors

The addresses of sectors already recorded in the PDL shall not be recorded in the SDL.

The number of the SDL entries is registered as the number of total defect list entries in the SDL.

If a replacement sector listed in the SDL is later found to be defective, the entry shall be rewrite with new replacement sector for that defective sector.

The number of SDL updates shall be updated when rewriting the SDL list for both the beginning and ending of SDL entries. These numbers of SDL update registered in the beginning bytes and the ending bytes shall be equivalent. If these numbers are not equivalent, this SDL shall be ignored. The SDL with the highest number of updates shall be used.

In the case of a multiple-sector SDL, the list of addresses of defective and of replacement sectors shall continue with the first byte of the second and subsequent sectors. Thus, the SDL Identifier and the number of SDL entries in table 11a shall be present only in the first sector. The number of SDL updates shall be written in the first and the last sector in the SDL sectors.

In an empty SDL, bytes 6 and 7 shall be set to (00) and bytes 4, 5, 8 and 9 shall be set to (01) and bytes 10 to 511 shall be set to (FF).

Copyright International Organization for Standardization
Provided by IHS under license with ISO
No reproduction or networking permitted without license from IHS Not for Resale

Table 11a - Content of the SDL (Rewritable disk)

Byte	SDL Content	Setting
0	SDL Identifier	(00)
1	SDL Identifier	(02)
2 to 3	Reserved	(00)
4	Number of SDL update, (MSB)	
5	Number of SDL update, (LSB)	
6	Number (m) of SDL Entries , (MSB)	-
7	Number (m) of SDL Entries , (LSB)	-
8	Address of the First Defective Sector (Track Number, MSB)	-
9	Address of the First Defective Sector (Track Number)	-
10	Address of the First Defective Sector (Track Number, LSB)	-
11	Address of the First Defective Sector (Sector Number)	-
12	Address of the First Replacement Sector (Track Number, MSB)	-
13	Address of the First Replacement Sector (Track Number)	-
14	Address of the First Replacement Sector (Track Number, LSB)	-
15	Address of the First Replacement Sector (Sector Number)	-
:	:	
($8m$)	Address of the Last Defective Sector (Track Number, MSB)	-
($8m$+1)	Address of the Last Defective Sector (Track Number)	-
($8m$+2)	Address of the Last Defective Sector (Track Number, LSB)	-
($8m$+3)	Address of the Last Defective Sector (Sector Number)	-
($8m$+4)	Address of the Last Replacement Sector (Track Number, MSB)	-
($8m$+5)	Address of the Last Replacement Sector (Track Number)	-
($8m$+6)	Address of the Last Replacement Sector (Track Number, LSB)	-
($8m$+7)	Address of the Last Replacement Sector (Sector Number)	-
($8m$+8)	Number of SDL update, (MSB)	
($8m$+9)	Number of SDL update, (LSB)	
($8m$+10) to 511		(FF)

19.6.2 Write once disk

Both the SDL and the WDL are used in write once disk for handling defective sectors using Linear Replacement Algorithm. The SDL and the WDL are created during initialization and used after certification. All disks with a Write Once Zone shall have the SDLs and the WDLs recorded during initialization.

The WDL is specified as the working defect list and the defect list is updated using a new sector in the WDL area specified in clause 18 when a new defective sector is detected. When the WDL is increased over a sector capacity, an SDL sector is registered containing same defect list information as in the WDL. After registration of an SDL sector, the rest of defect list over a sector capacity is registered in a sector of WDL area.

The SDL and the WDL shall contain entries in the form of addresses of defective user sectors and addresses of the spare sectors which replace them. Each entry in the SDL and the WDL contains 8 bytes, viz. four each for the address of a defective sector and for the address of its replacement sector.

The addresses of the defective sectors shall be in ascending order.

The SDL and the WDL shall be recorded in the minimum number of sectors necessary, and it shall begin in the first user data byte of the first sector. All unused bytes of the WDL shall be set to (FF).

The following information shall be recorded in each of the four SDLs

- SDL Identifier
- Number of SDL page
- Number of SDL Entries
- Address of defective sectors and their replacement sectors

The following information shall be recorded in each of the four WDLs

Copyright International Organization for Standardization
Provided by IHS under license with ISO
No reproduction or networking permitted without license from IHS Not for Resale

- WDL Identifier
- Number of WDL page
- Number of WDL Entries
- Address of defective sectors and their replacement sectors

The addresses of sectors already recorded in the PDL shall not be recorded in the SDL and the WDL.

The number of the SDL page and the WDL page are used for identifying the latest defect list in the SDL and in the WDL. The page number in the SDL and in the WDL are registered as a number of active sectors in the SDL and the WDL.

The number of the SDL entries is registered as a calculated value of multiplying with number of SDL sectors which is used and the total defect list entries in a sector.

The number of the WDL entries is registered as the number of entries in the WDL sector.

If a replacement sector listed in the WDL is later found to be defective, the next good sector in the WDL area shall be used as the WDL. The number of the WDL page in the new WDL sector shall be the same as the defective WDL sector.

In the case of a multiple-sector SDL, the list of addresses of defective and of replacement sectors shall continue from the 8th byte of the second and subsequent sectors. The SDL Identifier, number of the SDL page and the number of SDL entries in table 11b shall be present in every sectors.

In an empty SDL, byte 3 shall be set to (01) and bytes 6 and 7 shall be set to (00) and bytes 10 to 511 shall be set to (FF).

Table 11b - Content of the SDL (write once disk)

Byte	SDL Content	Setting
0	SDL Identifier	(00)
1	SDL Identifier	(02)
2	Reserved	(00)
3	Number of SDL page	
4	reserved	(00)
5	reserved	(00)
6	Number (m) of SDL Entries, (MSB)	-
7	Number (m) of SDL Entries, (LSB)	-
8	Address of the First Defective Sector (Track Number, MSB)	-
9	Address of the First Defective Sector (Track Number)	-
10	Address of the First Defective Sector (Track Number, LSB)	-
11	Address of the First Defective Sector (Sector Number)	-
12	Address of the First Replacement Sector (Track Number, MSB)	-
13	Address of the First Replacement Sector (Track Number)	-
14	Address of the First Replacement Sector (Track Number, LSB)	-
15	Address of the First Replacement Sector (Sector Number)	-
:	:	
($8m$)	Address of the Last Defective Sector (Track Number, MSB)	-
($8m$+1)	Address of the Last Defective Sector (Track Number)	-
($8m$+2)	Address of the Last Defective Sector (Track Number, LSB)	-
($8m$+3)	Address of the Last Defective Sector (Sector Number)	-
($8m$+4)	Address of the Last Replacement Sector (Track Number, MSB)	-
($8m$+5)	Address of the Last Replacement Sector (Track Number)	-
($8m$+6)	Address of the Last Replacement Sector (Track Number, LSB)	-
($8m$+7)	Address of the Last Replacement Sector (Sector Number)	-
($8m$+8) to 511		(FF)

Copyright International Organization for Standardization
Provided by IHS under license with ISO
No reproduction or networking permitted without license from IHS
Not for Resale

Table 12 - Content of the WDL (write once disk)

Byte	WDL Content	Setting
0	WDL Identifier	(00)
1	WDL Identifier	(03)
2	Reserved	(00)
3	Number of WDL page	-
4	Reserved	(00)
5	Reserved	(00)
6	Number (k) of WDL Entries, (MSB)	-
7	Number (k) of WDL Entries, (LSB)	-
8	Address of the First Defective Sector (Track Number, MSB)	-
9	Address of the First Defective Sector (Track Number)	-
10	Address of the First Defective Sector (Track Number, LSB)	-
11	Address of the First Defective Sector (Sector Number)	-
12	Address of the First Replacement Sector (Track Number, MSB)	-
13	Address of the First Replacement Sector (Track Number)	-
14	Address of the First Replacement Sector (Track Number, LSB)	-
15	Address of the First Replacement Sector (Sector Number)	-
:		
($8k$)	Address of the Last Defective Sector (Track Number, MSB)	-
($8k$+1)	Address of the Last Defective Sector (Track Number)	-
($8k$+2)	Address of the Last Defective Sector (Track Number, LSB)	-
($8k$+3)	Address of the Last Defective Sector (Sector Number)	-
($8k$+4)	Address of the Last Replacement Sector (Track Number, MSB)	-
($8k$+5)	Address of the Last Replacement Sector (Track Number)	-
($8k$+6)	Address of the Last Replacement Sector (Track Number, LSB)	-
($8k$+7)	Address of the Last Replacement Sector (Sector Number)	-
($8k$+8) to 511		(FF)

Section 4 - Characteristics of embossed information

20 Method of testing

The format of the embossed information on the disk is defined in clauses 13 to 18. Clauses 21 to 23 specify the requirements for the signals from grooves with no written marks, Headers and embossed data from the recording field of the Control Zone, as obtained when using the Reference Drive defined in clause 9.

Clauses 21 to 23 specify only the average quality of the embossed information. Local deviations from the specified values, called defects, can cause tracking errors, erroneous Headers or errors in the Data fields. These errors are covered by section 6.

20.1 Environment

All signals in clauses 21 to 23 shall be within their specified ranges with the cartridge in any environment in the range of allowed operating environments defined in 8.1.2.

20.2 Reference Drive

All signals specified in clauses 21 to 23 shall be measured in the indicated channels of the Reference Drive. The drive shall have the following characteristics for the purpose of these tests.

20.2.1 Optics and mechanics

The focused optical beam shall have the properties defined in 9.2 a) to g). The disk shall rotate as specified in 9.5.

20.2.2 Read power

For the wavelength 780 nm, the optical power incident on the entrance surface of the disk (used for reading the information) shall be in the range from 0,8 mW to 1,2 mW.

For other wavelengths the values for this range are not specified by this International Standard.

Copyright International Organization for Standardization
Provided by IHS under license with ISO
No reproduction or networking permitted without license from IHS Not for Resale

20.2.3 Read channels

The drive shall have a read channel, in which the total amount of light in the exit pupil of the objective lens is measured. This channel can have the implementation as given by Read channel in 9.3.

20.2.4 Tracking

During the measurement of the signals, the axial tracking error between the focus of the optical beam and recording layer shall not exceed

$$e_{max}(\text{axial}) = 0{,}8\ \mu\text{m}$$

and the radial tracking error between the focus of the optical beam and the centre of a track shall not exceed

$$e_{max}(\text{radial}) = 0{,}09\ \mu\text{m}$$

The radial tracking servo used for this measurement requires a higher performance than that specified in 11.4.8.

20.3 Definition of signals

All signals are linearly related to currents through a photodiode detector, and are therefore linearly related to the optical power falling on the detector.

The signals from the two halves of the split photodiode detector are indicated by I_1 and I_2. The signals in the tracking channel are referenced to the signal $(I_1 + I_2)_a$, which is the sum of the signals obtained from the ODF which is unrecorded, ungrooved area of the Information Zone.

The signals in Read channel are referenced to the signal I_0, which is Read channel signal from the ODF.

Copyright International Organization for Standardization
Provided by IHS under license with ISO
No reproduction or networking permitted without license from IHS
Not for Resale

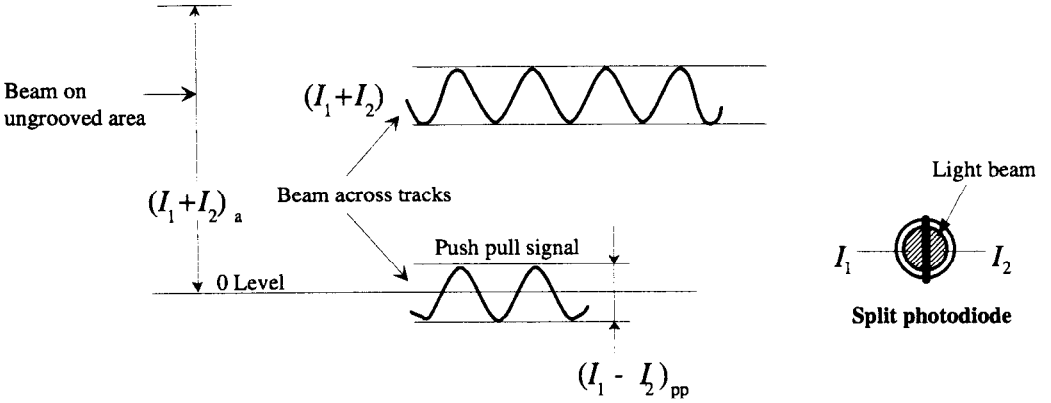

Signals from the tracking channel

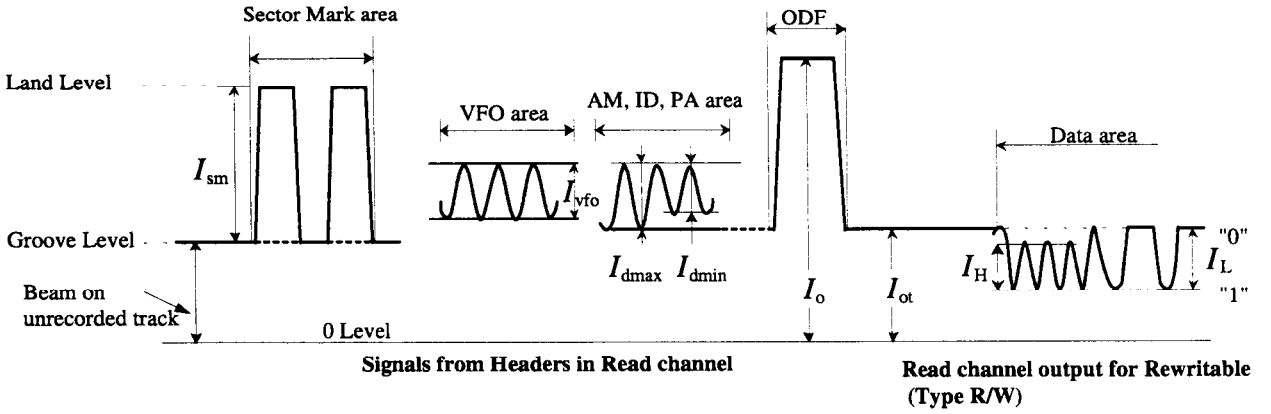

Signals from Headers in Read channel

Read channel output for Rewritable (Type R/W)

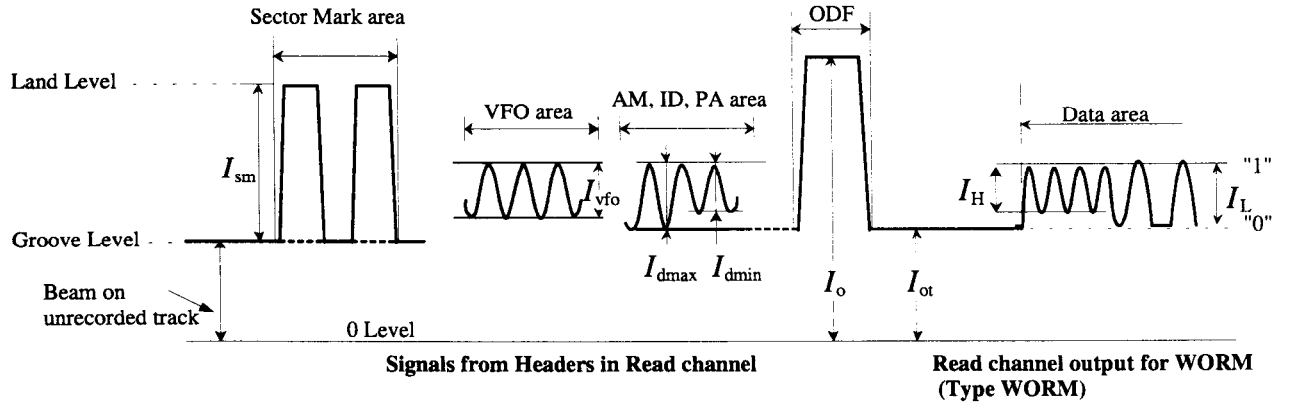

Signals from Headers in Read channel

Read channel output for WORM (Type WORM)

Figure 18 - Signals from embossed area and Recording field.

Copyright International Organization for Standardization
Provided by IHS under license with ISO
No reproduction or networking permitted without license from IHS
Not for Resale

21 Signals from grooves

Embossed data of Headers field, ODF and the recording field of the Control Zone are in the form of groove interruptions which are defined in 14.2.4 and clause 16.

The signals $(I_1 + I_2)$ and $(I_1 - I_2)$ shall be filtered in order that frequencies above 1 MHz are attenuated by at least 40 dB thereby eliminating the effect of modulation due to embossed marks. This condition shall not be applied to the measurement of the signal $(I_1 + I_2)_a$.

The shape of the grooves and the embossed information from the Header fields, ODF and the recording field of the Control Zone shall be such that the following requirements for circular polarization are met (see annex J).

21.1 Push-pull signal

The push-pull signal is the sinusoidal difference signal $(I_1 - I_2)$ in the tracking channel, when the focus of the optical beam crosses the tracks. The signal can be used by the drive for radial tracking. The peak-to-peak value of the push-pull signal shall meet the following requirements:

a) in Control Zone:

$$0{,}35 \leq \frac{(I_1 - I_2)_{pp}}{(I_1 + I_2)} \leq 0{,}58$$

b) in grooved areas in the Information Zone without embossed Recording fields:

$$0{,}21 \leq \frac{(I_1 - I_2)_{pp}}{(I_1 + I_2)} \leq 0{,}31$$

21.2 Divided push-pull signal

The first term of the divided push-pull signal is the peak-to-peak amplitude derived from the instantaneous level of the differential output $(I_1 - I_2)$ from the split photodiode detector when the light beam crosses the unrecorded or preformatted data area of grooved tracks divided by the instantaneous level of the sum output $(I_1 + I_2)$ from the split photodiode detector when the light beam crosses these areas.

The second term of the divided push-pull signal is the ratio of the minimum peak-to-peak amplitude derived from the instantaneous level of the differential output $(I_1 - I_2)$ divided by the instantaneous level of the sum output $(I_1 + I_2)$ from the split photodiode detector when the light beam crosses the preformatted data area of grooved tracks to the maximum peak-to-peak amplitude derived from the instantaneous level of the differential output $(I_1 - I_2)$ divided by the instantaneous level of the sum output $(I_1 + I_2)$ from the split photodiode detector when the light beam crosses the preformatted data area of grooved tracks.

The split photodiode detector separator shall be parallel to the projected track axis. In this measurement, the I_1 and I_2 signals shall be provided by the split photodiode detector. The tracking servo shall be operating in open-loop mode during this measurement. The first term shall meet the following requirements:

a) in Control Zone:

$$0{,}50 \leq \left[\frac{(I_1 - I_2)}{(I_1 + I_2)}\right]_{pp} \leq 0{,}90$$

b) in grooved areas in the Information Zone without embossed Recording fields:

$$0{,}33 \leq \left[\frac{(I_1 - I_2)}{(I_1 + I_2)}\right]_{pp} \leq 0{,}58$$

Copyright International Organization for Standardization
Provided by IHS under license with ISO
No reproduction or networking permitted without license from IHS
Not for Resale

The second term shall satisfy:

$$\frac{\left[\left[\frac{(I_1 - I_2)}{(I_1 + I_2)}\right]_{pp}\right]_{min}}{\left[\left[\frac{(I_1 - I_2)}{(I_1 + I_2)}\right]_{pp}\right]_{max}} \geq 0{,}80$$

21.3 On-track signal

The on-track signal is the signal in Read channel when tracking in a grooved area without embossed data. The on-track signal I_{ot} shall meet the following requirements:

$$0{,}42 \leq \frac{I_{ot}}{I_0} \leq 0{,}65$$

21.4 Phase depth

The phase depth of the grooves shall be less than 180°.

21.5 Track location

The tracks are located at those radii on the disk where the push-pull signal equals 0 and the sum output ($I_1 + I_2$) has its minimum value.

22 Signals from Headers

The signals obtained from the embossed Headers shall be measured in Read channel of the Reference Drive.

The signal from an embossed mark in the recording layer is defined as the peak-to-peak value of the modulation of the signal in Read channel caused by the mark when the beam follows a recorded track (see annex J).

The level of all signals from embossed marks shall be higher than I_{ot}.

22.1 Sector Mark

The signal I_{sm} from the Sector Mark shall meet the following requirements:

$$\frac{I_{sm}}{I_0} \geq 0{,}40$$

22.2 VFO_1 and VFO_2

The signal I_{vfo} from the marks in the VFO_1 and VFO_2 fields shall meet the following requirements:

$$\frac{I_{vfo}}{I_0} \geq 0{,}09$$

In addition the condition

$$\frac{I_{vfo}}{I_{dmax}} \geq 0{,}50$$

shall be satisfied within each Header, where I_{dmax} is the maximum signal from marks of that Header in the fields defined in 22.3.

22.3 Address Mark, ID field and Postamble

The signal I_d from marks in the Address Mark, ID and Postamble fields shall meet the following requirements:

$$\frac{I_{dmax}}{I_0} \geq 0{,}11$$

$$\frac{I_{dmin}}{I_{dmax}} \geq 0{,}50$$

Copyright International Organization for Standardization
Provided by IHS under license with ISO
No reproduction or networking permitted without license from IHS Not for Resale

The last requirement applies over any Header. I_{dmin} and I_{dmax} are the signals with minimum and maximum amplitude in those fields of a sector mentioned above.

23 Signals from embossed Recording fields

The Recording field of the Control Zone shall contain embossed marks. The signals from these marks shall be measured in the Read channel (see 9.3 and annex J). Acceptable defects of the marks are specified in section 6. The signal from all embossed Recording fields is defined as the peak-to-peak value of the modulation of the signal.

The signal I_d from marks in the Recording fields of the Control Zone shall meet the following requirements:

$$\frac{I_{dmax}}{I_0} \geq 0{,}11$$

$$\frac{I_{dmin}}{I_{dmax}} \geq 0{,}50$$

The last requirement applies over Recording fields. I_{dmin} and I_{max} are the signals with minimum and maximum amplitude in the Recording field of a sector.

Section 5 - Characteristics of the recording layer

24 Method of testing

Clauses 25 and 26 describe a series of tests to assess the phase change recording properties of the recording layer, as used for overwriting data. The tests shall be performed only in the Recording field of the sectors in the Data Zone. The write, read and overwrite operations necessary for the tests shall be made on the same Reference Drive.

Clauses 25 and 26 specify only the average quality of the recording layer. Local deviations from the specified values, called defects, can cause write or overwrite problems. These defects are covered by section 6.

24.1 Environment

All signals in clauses 25 and 26 shall be within their specified ranges with the cartridge in any environment in the range of allowed operating environments defined in 8.1.2.

24.2 Reference Drive

The write and overwrite tests described in clauses 25 and 26 shall be measured in Read channel of the Reference Drive. The drive shall have the following characteristics for the purpose of these tests.

24.2.1 Optics and mechanics

The focused optical beam shall have the properties defined in 9.2 a) to g). The disk shall rotate as specified in 9.5.

24.2.2 Read power

The optical power incident on the entrance surface of the disk and used for reading the information shall be in the range from 0,8 mW to 1,2 mW.

24.2.3 Read channel

The Reference Drive shall have a Read channel which can detect marks in the recording layer.

24.2.4 Tracking

During the measurement of the signals, the focus of the optical beam shall follow the tracks as specified in 20.2.4.

24.3 Write conditions

Marks of rewritable disks are overwritten on the disk by pulses of optical power superimposed on an erase power (see figure F.1 of annex F).

Marks of write once disks are written on the disk by pulses of optical power superimposed on a power less than, or equal to, the read power.

Copyright International Organization for Standardization
Provided by IHS under license with ISO
No reproduction or networking permitted without license from IHS Not for Resale

24.3.1 Write pulse

The overwrite pulse for rewritable disks has two levels of laser power; write power (P_w) and erase power (P_e) (see figure F.1 of annex F). In the case of write once disks, the erase power of the overwrite pulse (figure F.1) is set to a power level less than, or equal to, the read power. The write pulse for write once disks is a pulse of optical power superimposed on a power less than, or equal to, the read power. The write conditions are defined in byte 5 and bytes 200 to 239 of Control data as the media sensitivity (see annex E).

The rise and fall times T_r and T_f shall each be less than 10 ns when the pulse width T_p exceeds 50 ns. They shall each be less than $0{,}2T_p$ when T_p is less than 50 ns.

24.3.2 Write power and pulse width

The write power (P_w) and the erase power (P_e) are the optical powers incident on the entrance surface of the disk which are used for overwriting marks on rewritable disks.

The write power (P_w) is used for writing marks on write once disks.

The tests shall be carried out at a temperature of 23 °C ± 2 °C, using one of the write condition of the media as given in byte 5 and bytes 200 to 239 of Control data (see in annex E).

The actual power and pulse width used shall be within 5 % of those selected.

The required write power shall not exceed 17 mW.

24.4 Definition of signals

The signal in Read channel is linearly related to the sum of the currents through the split photo-diode detector G, and is therefore linearly related to the optical power falling on the detector G (see 9.1).

25 Write characteristics

25.1 Resolution and modulation depth

The resolution is the ratio of the signal amplitude from a high-density pattern of marks (maximum frequency) to the signal amplitude from a low-density pattern of marks (minimum frequency). It shall be measured as follows.

Write in the Recording field of a sector two series of marks, one spaced eight Channel bits apart and one spaced three Channel bits apart. The write condition shall be as specified in 24.3.

Read the signals in Channel under the conditions 24.2.2 and 24.2.3. I_L is the peak to peak value of the signal obtained from the widely spaced marks. I_H is the peak-to-peak value of the signal obtained from the narrowly spaced marks(see figure 18).

The reflectivity of written marks shall change high to low in case of rewritable disks. The reflectivity of written marks shall change low to high in case of write once disks (see figure 18).

The resolution I_H / I_L shall not be less than 0,3 within any sector in the Data Zone.

The modulation depth I_L / I_{ot} shall not be less than 0,17 within any sector in the Data Zone.

25.2 Narrow-band signal-to-noise ratio

The narrow-band signal-to-noise ratio is the ratio of the signal level to the noise level of a specified pattern, measured in a 30 kHz bandwidth. It shall be determined as follows.

Write a series of marks spaced three Channel bits apart in the Recording fields of a series of sectors. The write conditions shall be as specified in 24.3.

Read the signal from the Recording fields in the Read channel under the conditions specified in 24.2.2 and 24.2.3, using a spectrum analyser with a bandwidth of 30 kHz. Measure the amplitude of the signal obtained from narrowly spaced marks at the frequency appropriate to the band and the noise as indicated in figure 19. The measurements shall be corrected for the effect of the Header fields, in order to obtain the value for the Recording field only. The narrow-band signal-to-noise ratio is

$$20 \log_{10} \left(\frac{\text{Signal level}}{\text{Noise level}} \right)$$

The narrow-band signal-to-noise ratio after correction for the effects of Header fields, shall be greater than 46 dB in any sector in the Data Zone for all tracks.

Copyright International Organization for Standardization
Provided by IHS under license with ISO
No reproduction or networking permitted without license from IHS Not for Resale

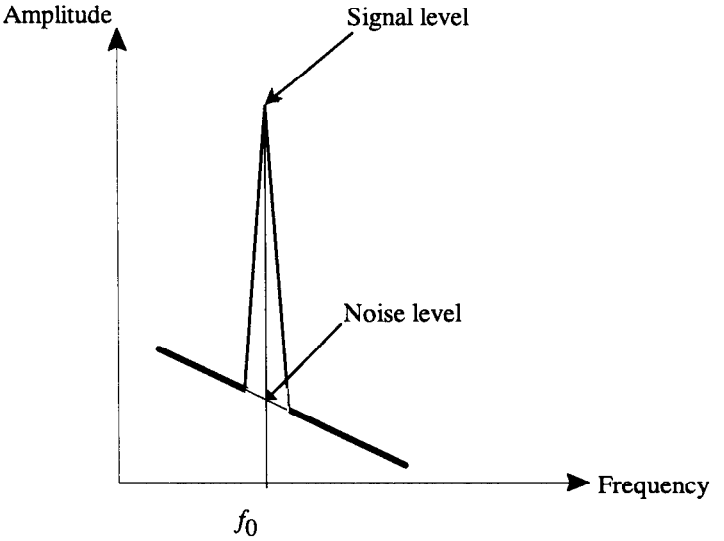

Figure 19 - Spectrum analyser display

25.3 Cross-talk

The test on cross-talk shall be carried out on any group of five adjacent unrecorded tracks, designated (*n-2*), (*n-1*), *n*, (*n+1*), (*n+2*), in the Data Zone according to the following procedure:

- Write a series of marks spaced eight Channel bit apart in the Recording fields of the sectors in track *n*. The write condition shall be specified in 24.3.
- Read the signal from the Recording fields of the sectors in the tracks (*n-1*), *n* and (*n+1*) under the conditions specified in 24.2.2 and 24.2.3.

The cross-talk from a track *n* to track (*n-1*) and to track (*n+1*) shall be lower than −26 dB.

26 Overwrite erasability

The overwrite erasability is defined as

$$20\log_{10}\left(\frac{\text{Residual signal level of marks spaced three channel bits apart}}{\text{Signal level of the overwritten marks spaced three Channel bits apart}}\right)$$

This ratio shall be less than −18 dB for all the Data field.

The test of the overwrite erasability of rewritable disks shall be carried out in the Data Zone according to the following procedure:

a) Overwrite a series of marks spaced three Channel bits apart in the Recording fields of any series of sectors in the Data Zone. The write conditions shall be as specified in 24.3.

b) Read the Recording fields under the conditions specified in 24.2.2 and 24.2.3, using a spectrum analyser with a bandwidth of 30 kHz. Note the amplitude of the signal of the marks spaced three Channel bits apart..

c) Overwrite a series of marks spaced eight Channel bits apart in the Recording fields of any series of sectors in the Data Zone. The write condition shall be as specified in 24.3.

d) Read the Recording field under the conditions specified in 24.2.2 and 24.2.3, using spectrum analyzer with a bandwidth of 30 kHz. Note the amplitude of the residual signal of the marks spaced three Channel bits apart.

e) Repeat a) and c) 1 000 times.

f) Repeat a) and b). Note the amplitude of the signal of the marks spaced three Channel bits apart.

g) Repeat c) and d). Note the amplitude of the residual signal spaced three Channel bits apart.

Copyright International Organization for Standardization
Provided by IHS under license with ISO
No reproduction or networking permitted without license from IHS
Not for Resale

Section 6 - Characteristics of user data

27 Method of testing

Clauses 28 and 29 describe a series of measurements to test conformance of the user data on the disk with this International Standard. It checks the legibility of both embossed and user-written data. The data is assumed to be arbitrary. The user-written data may have been written by any drive in any environment. The read tests shall be performed on the Reference Drive.

Whereas clauses 20 to 26 disregard defects, clauses 28 and 29 include them as an unavoidable deterioration of the read signals. The gravity of a defect is determined by the correctability of the ensuing errors by the error detection and correction circuit in the read channel defined below. The requirements in clauses 28 and 29 define a minimum quality of the data, necessary for data interchange.

27.1 Environment

All signals in clauses 28 to 29 shall be within their specified ranges with the cartridge in any environment in the range of allowed operating environments defined in 8.1.2. It is recommended that before testing the entrance surface of the optical disk shall be cleaned according to the instructions of the manufacturer of the disk.

27.2 Reference Drive

All signals specified in clauses 28 to 29 shall be measured in the indicated channels of the Reference Drive. The drive shall have the following characteristics for the purpose of these tests:

27.2.1 Optics and mechanics

The focused optical beam shall have the properties already defined in 9.2 a) to g). The disk shall rotate as specified in 9.5.

27.2.2 Read power

The optical power incident on the entrance surface of the disk (used for reading the information) shall be in the range from 0,8 mW to 1,2 mW.

27.2.3 Read amplifiers

The Read amplifiers after the photo-detectors in read channels shall be as specified in 9.3.

27.2.4 Analog-to-binary converters

The signals from both read amplifiers shall be converted from analog-to-binary with a peak detector.

The converter for Read channel shall operate correctly for analog signals from both user-written marks and embossed marks with amplitudes as determined by clauses 22, 23 and 25.

27.2.5 Error correction

Correction of errors in the data bytes shall be carried out by an error detection and correction system based on the definition in D.3 of annex D.

27.2.6 Tracking

During measurement of the signals, the focus of the optical beam shall follow the tracks as specified in 20.2.4.

28 Minimum quality of a sector

This clause specifies the minimum quality of the Header and Recording field of a sector as required for interchange of the data contained in that sector. The quality shall be measured on the Reference Drive specified in 27.2.

A byte error occurs when one or more bits in a byte have a wrong setting, as detected by the ECC and/or CRC circuits.

28.1 Headers

28.1.1 Sector Mark

At least three of the five long marks of the Sector Mark shall have the timing specified in 16.2 and the signals shall have the amplitude specified in 22.1.

28.1.2 ID fields

At least one of the three ID fields in a Header read in Read channel shall not have any byte errors, as checked by the CRC in the field.

Copyright International Organization for Standardization
Provided by IHS under license with ISO
No reproduction or networking permitted without license from IHS Not for Resale

28.2 User-written data

The user-written data in a sector as read in Read channel shall not contain any byte errors that cannot be corrected by the error correction defined in 27.2.5.

28.3 Embossed data

The embossed data in a sector as read in Read channel shall not contain any byte errors that cannot be corrected by the error correction defined in 27.2.5.

29 Data interchange requirements

A disk offered for interchange of data shall comply with the following requirements.

29.1 Tracking

The focus of the optical beam shall not jump tracks unintentionally.

29.2 User-written data

Any sector written in the User Area that does not comply with 28.1 and 28.2 shall have been replaced according to the rules of the defect management as defined in clause 19.

29.3 Quality of disk

The quality of the disk is reflected in the number of replaced sectors in the User Area. This International Standard allows a maximum of 4 160 replaced sectors.

Copyright International Organization for Standardization
Provided by IHS under license with ISO
No reproduction or networking permitted without license from IHS Not for Resale

©ISO/IEC

Annex A

(normative)

Edge distortion test

A.1 The distortion test checks if the case is free from unacceptable distortions and protrusions along its edges. The test is made by causing the cartridge to pass through the vertical slot of a gauge while applying a specified force in addition to the gravitational pull.

A.2 The gauge shall be made of a suitable material, e.g. of chrome-plated carbon steel. The inner surfaces shall be polished to a surface finish of 5 µm peak-to-peak.

A.3 The dimensions shall be as follows (see figure A.1):

A = 137,0 mm min.
B = 125,0 mm ± 0,1mm
C = 8,0 mm ± 0,1mm
D = 8,20 mm ± 0,01mm
E = 8,6 mm min.

A.4 When the cartridge is inserted vertically into the gauge, a vertical downward force F of 2,7 N maximum applied to the centre of the top edge of the cartridge shall cause the cartridge to pass through the gauge.

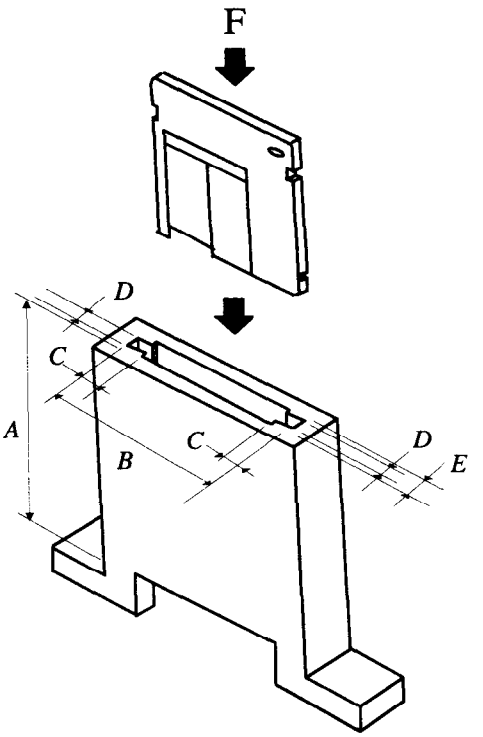

Figure A.1 - Distortion Gauge

Copyright International Organization for Standardization
Provided by IHS under license with ISO
No reproduction or networking permitted without license from IHS
Not for Resale

Annex B

(normative)

Compliance test

B.1 The compliance test checks the flatness and flexibility of the case by forcing the four reference surfaces of the case into a plane. The test is made by placing the cartridge on the supports of a gauge and applying forces on the cartridge opposite to the supports.

B.2 The location of the four reference surfaces S1, S2, S3 and S4 is defined in 10.3.4 and figure 4.

B.3 The test gauge consists of a base plate on which four posts P1, P2, P3 and P4 are fixed so as to correspond to the four surfaces S1, S2, S3 and S4, respectively (see figure B.1). The dimensions are as follows (see figure B.2):

Posts P1 and P2

$D_a = 6{,}50$ mm ± 0,01 mm

$D_b = 3{,}90 \begin{matrix} +0{,}02 \text{ mm} \\ -0{,}00 \text{ mm} \end{matrix}$

$H_a = 1{,}0$ mm ± 0,1 mm

$H_b = 2{,}0$ mm max.

The top area (H_b - H_a) of posts P1 and P2 has a chamfer

Posts P3 and P4

$D_c = 5{,}00$ mm ± 0,01 mm

After assembly, the upper annular surfaces of the four posts shall lie between two horizontal planes spaced 0,01 mm apart.

B.4 The cartridge shall be placed with its reference surfaces onto the posts of the horizontal gauge. A vertical downward force F_c of 1,0 N shall be exerted on the cartridge opposite each of the four posts.

B.5 Requirements

Under the conditions of B.4, three of the four surfaces S1 to S4 shall be in contact with the annular surface of their respective posts, and any gap between the remaining surface S and the annular surface of its post shall not exceed 0,1 mm.

Copyright International Organization for Standardization
Provided by IHS under license with ISO
No reproduction or networking permitted without license from IHS
Not for Resale

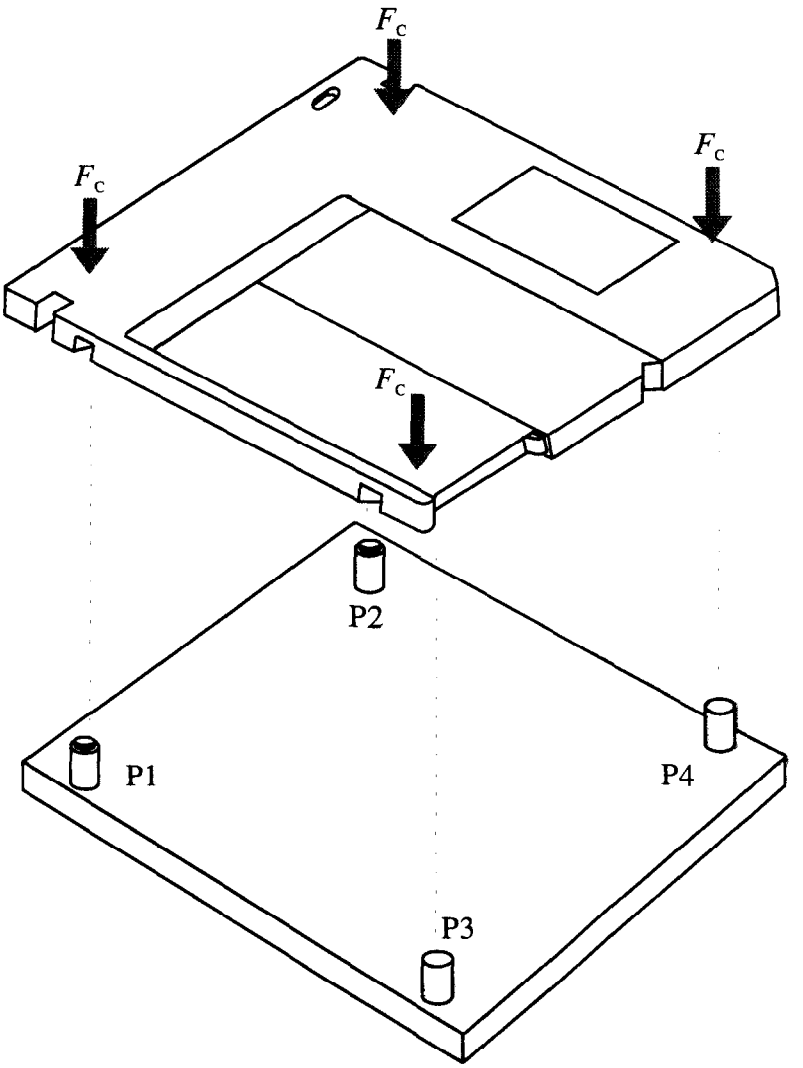

Figure B.1 - Compliance gauge

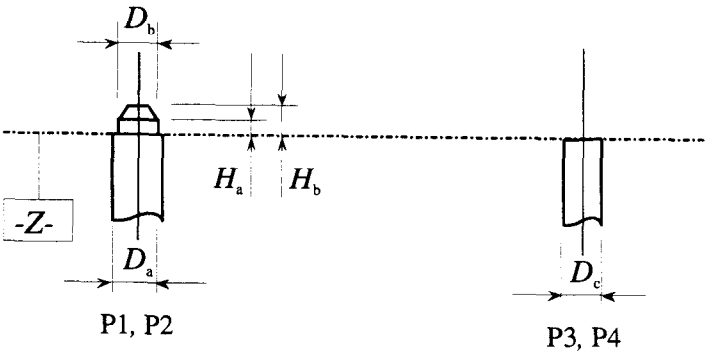

Figure B.2 - Detail of posts

Copyright International Organization for Standardization
Provided by IHS under license with ISO
No reproduction or networking permitted without license from IHS
Not for Resale

Annex C

(normative)

CRC for ID fields

The 16 check bits of the CRC of the ID field shall be computed over the first three bytes of this field. The generator polynomial shall be

$$G(x) = x^{16} + x^{12} + x^{5} + 1$$

The residual polynomial is defined by

$$R(x) = \left[\sum_{i=8}^{i=23} \bar{b}_i x^i + \sum_{i=0}^{i=7} b_i x^i \right] x^{16} \bmod G(x)$$

where b_i denotes a bit of the first three bytes and $\bar{b}_i$ an inverted bit. Bit b_{23} is the highest order bit of the first byte.

The contents of the 16 check bits c_k of the CRC are defined by

$$R_c(x) = \sum_{k=0}^{k=15} c_k x^k$$

c_{15} is recorded in the highest order bit of the fourth byte in the ID field.

Copyright International Organization for Standardization
Provided by IHS under license with ISO
No reproduction or networking permitted without license from IHS
Not for Resale

Annex D

(normative)

Format of the Data field of a sector

D.1 Contents of Data field

The bytes in the Data field constitute an ordered sequence A_n. The elements of A_n are, depending on the value of n:

$1 \le n \le 512$: $A_n = D_n$	user data bytes
$513 \le n \le 516$: $A_n = P_m$	bytes with non-specified content
$517 \le n \le 526$: $A_n = F_l$	reserved data and set to (FF)
$527 \le n \le 530$: $A_n = C_k$	CRC check bytes
$531 \le n \le 610$: $A_n = E_{st}$	ECC check bytes,

where

$m = n - 512$

$l = n - 516$

$k = n - 526$

$s = [(n - 531) \bmod 5] + 1$

$$t = \text{int}\left[\frac{n-531}{5}\right] + 1$$

The notation int[x] denotes the largest integer not greater than x; (x mod y) denotes the remainder of the integer division x/y.

The order of the user data bytes D_n is the same as the order in which they are input into the controller of the drive, i.e. D_1 comes first. The Resync bytes are not included in A_n.

D.2 Interleaving

Before the ECC and CRC bytes are calculated, the bytes in the Data field are five-way interleaved. For that purpose, the first four sub-groups of A_n are mapped onto a two-dimensional matrix B_{ij} with 106 rows and 5 columns (see table D.1). Thus

$$\text{for } 1 \le n \le 530\text{: } B_{ij} = A_n$$

where

$$i = 105 - \text{int}\left[\frac{n-1}{5}\right]$$

$$j = (n - 1) \bmod 5$$

D.3 CRC and ECC

D.3.1 General

The CRC and ECC shall be computed over the Galois field based on the primitive polynomial

$$G_p(x) = x^8 + x^5 + x^3 + x^2 + 1$$

The elements of the field are $a^i = (\beta^i)^{88}$, where β is a primitive root of $G_p(x)$. The value of the n-th bit in a byte is the coefficient of the n-th power of β, where $0 \le n \le 7$, when β is expressed on a polynomial basis.

Copyright International Organization for Standardization
Provided by IHS under license with ISO
No reproduction or networking permitted without license from IHS
Not for Resale

D.3.2 CRC

The generator polynomial for the CRC bytes shall be

$$Gc(x) = \prod_{i=136}^{i=139}(x+\alpha^i)$$

The four check bytes of the CRC shall be computed over the user data, the four P_m bytes and the ten F_l bytes. The information polynomial shall be

$$Ic(x) = \left[\sum_{i=1}^{i=105}\left(\sum_{j=0}^{j=4}(Bij)x^i\right)\right]+(B_{0,0})x^0$$

The contents of the four check bytes C_k of the CRC are defined by the residual polynomial

$$R_C(x) = I_C(x)\, x^4 \mod G_C(x)$$

The storage locations for the coefficients of the polynomial are specified by

$$R_C(x) = \sum_{k=1}^{k=4} C_k x^{4-k}$$

D.3.3 ECC

The primitive polynomial and the elements shall be as specified in D.3.1. The generator polynomial for the check bytes of the ECC shall be

$$G_e(x) = \prod_{i=120}^{i=135}(x+\alpha^i)$$

The 80 check bytes of the ECC shall be computed over the user data, the four P_m bytes, the ten F_l bytes and the four CRC bytes. The corresponding five information polynomials shall be

$$I_{ej}(x) = \sum_{i=0}^{i=105}(B_{i,j})x^i \qquad \text{where } 0 \le j \le 4$$

The contents of the 16 check bytes E_{st} for each polynomial $I_{ej}(x)$ are defined by the five residual polynomials

$$R_{ej}(x) = I_{ej}(x)\, x^{16} \mod G_e(x)$$

The storage locations for the coefficients of the polynomials are specified by

$$R_{ej}(x) = \sum_{t=1}^{t=16} \overline{E}_{(j+l),t}\, x^{16-t}$$

The bits of the computed check bytes shall be inverted before they are encoded into Channel bits, as indicated by the use of $\overline{E}$ in the above formula and E in table D.1.

D.4 Resync

The Resync fields shall be inserted in the Data field to prevent loss of byte synchronization and to limit the propagation of errors in the user data. Whilst they are numbered consecutively, all Resync fields are identical. They contain the following pattern in Channel bits which does not occur in user data.

0010 0000 0010 0100

The Resync field RS_n shall be inserted between bytes A_{15n} and A_{15n+1}, where $1 \le n \le 40$.

Copyright International Organization for Standardization
Provided by IHS under license with ISO
No reproduction or networking permitted without license from IHS Not for Resale

D.5 Recording Sequence

The bytes of the Data field shall be recorded on the disk immediately after the Sync field. Their order shall be according to the sequence A_n with the Resync bytes inserted as specified in D.4.

Table D.1 shows in matrix form the arrangement of the bytes. The sequence of recording is from left to right and top to bottom. The first three bytes SB1, SB2 and SB3 form the Data Sync field, which precedes the Data field. The first 106 rows of the Data field contain user data and a few bytes with unspecified contents and CRC data. The last 16 rows contain the ECC check bytes.

Table D.1 - Data field configuration. The indices *i* and *j* of bytes B_{ij} are given along the sides of the matrix

	Column No. *j* →	0	1	2	3	4	Row No. *i* ↓
106 rows	SB1 SB2 SB3	D1	D2	D3	D4	D5	105
		D6	D7	D8	D9	D10	104
		D11	D12	D13	D14	D15	103
	RS1	D16	D17	D18	D19	D20	102
							:
	RS2						:
							:
	RS33						:
		D501	D502	D503	D504	D505	5
		D506	D507	D508	D509	D510	4
	RS34	D511	D512	P1	P2	P3	3
		P4	F1	F2	F3	F4	2
		F5	F6	F7	F8	F9	1
	RS35	F10	C1	C2	C3	C4	0
16 rows		E1,1	E2,1	E3,1	E4,1	E5,1	-1
		E1,2	E2,2	E3,2	E4,2	E5,2	-2
	RS36	E1,3	E2,3	E3,3	E4,3	E5,3	-3
		E1,4	E2,4	E3,4	E4,4	E5,4	-4
	RS40	E1,15	E2,15	E3,15	E4,15	E5,15	-15
		E1,16	E2,16	E3,16	E4,16	E5,16	-16

Copyright International Organization for Standardization
Provided by IHS under license with ISO
No reproduction or networking permitted without license from IHS
Not for Resale

Annex E

(normative)

Contents of the Control Zone

E.1 Structure of the Control Zone

Sectors in the Control Zone shall contain embossed Headers, ODFs and embossed data in the Recording field. The total number of sectors used for the Control data shall be defined in the second byte of the Control data. The contents of sectors in the Control Zone shall be repeated each such number of sectors as defined in the second byte of the Control data.

E.2 Contents of the Control data

Sectors in the Control Zone shall contain the Control data provided by the manufacturer of the media.

E.2.1 Byte 0 : Sector identifier

This byte shall define an identification data for recognition of the Control Zone sectors. This byte defined in this International Standard shall be (1A). Other setting shall be reserved and be ignored in this International Standard.

E.2.2 Byte 1 : Number of sectors

This byte shall define the number of sectors used for containing a series of the Control data.

E.2.3 Byte 2 : Sector number

This byte shall define the sector number of the Control Zone sector.

E.2.4 Byte 3 : Generation number

This byte shall define the generation of the media based on the recording density. This byte of the Control data defined in this International Standard shall be (01) indicating a capacity of 650 Mbytes. Other settings are reserved.

E.2.5 Byte 4 : Media type

This byte shall define the type of media. This International Standard shall specify rewritable optical disk and write once optical disk using 780 nm laser and 2 026 rpm rotational speed. The following values shall be used for this International Standard:

(01) shall mean rewritable optical disk (Type R/W)using 780 nm laser and 2 026 rpm rotational speed.

(02) shall mean write once optical disk (Type WORM) using 780 nm laser and 2 026 rpm rotational speed.

Other setting shall be reserved and be ignored in this International Standard.

E.2.6 Byte 5 : Media identifier

This byte shall define the media identifier for the information recording depending on the recording layer of the media. This byte defined in this International Standard shall be (00) or (A0). The values (AX), (BX), (CX), (DX), (EX) and (FX) shall be reserved for future use in order to identifying the future media characteristics.

The value (00) shall require detailed definition for media sensitivity defined in bytes 200 to 239 in the Control data. The value (A0) shall be reserved in this International Standard. Other setting shall be ignored in this International Standard.

E.2.7 Bytes 6 to 7 : Start track address of user written data area

These bytes shall define start track address of user written data area. These bytes shall be set to (00).

E.2.8 Bytes 8 to 9 : End track address of user written data area

These bytes shall define end track address of user written data area. Byte 8 shall be set to (4F) and Byte 9 shall be set to (AF).

E.2.9 Bytes 10 to 25 : Media manufacturer identification

These bytes may be used for media manufacturer identification. The contents in these bytes shall be ignored in this International Standard.

Copyright International Organization for Standardization
Provided by IHS under license with ISO
No reproduction or networking permitted without license from IHS Not for Resale

E 2.10 Bytes 26 to 199 : Reserved

These bytes shall be reserved for future use and be set to (CC).

E.2.11 Bytes 200 to 239 : Write condition

These bytes shall define the write condition for each band of the Data Zone. Each definition consists of 4 bytes and the definition of write condition for 10 bands shall be stored in these bytes.

The first byte of each shall specify the write laser power on the entrance surface of the media for recording. It is specified as a number l such that

$$l = \frac{\text{(actual write power in mW)}}{0{,}1}$$

The second byte of each shall specify the erase laser power on the entrance surface of the media for recording. It is specified as a number m such that

$$m = \frac{\text{(actual erase power in mW)}}{0{,}1}$$

The third byte of each shall specify the write pulse width of 3T signal. It is specified as a number n such that

$$n = \frac{\text{(actual pulse width in ns)}}{0{,}5}$$

The fourth byte of each shall specify the recording strategy if it is applied and set to (CC) if it is not applied. The value of this byte is not defined in this International Standard when the recording strategy is applied.

The definition of these bytes are shown in table E.1.

E.2.12 Bytes 240 to 511 : Reserved

These bytes shall be reserved for future use and be set to (CC).

Copyright International Organization for Standardization
Provided by IHS under license with ISO
No reproduction or networking permitted without license from IHS Not for Resale

Table E.1 - Definition of write condition

Byte Number	Definition
200	Write power *l* of Band 0
201	Erase power *m* of Band 0
202	Pulse width *n* of Band 0
203	Recording strategy of Band 0
204	Write power *l* of Band 1
205	Erase power *m* of Band 1
206	Pulse width *n* of Band 1
207	Recording strategy of Band 1
208	Write power *l* of Band 2
209	Erase power *m* of Band 2
210	Pulse width *n* of Band 2
211	Recording strategy of Band 2
212	Write power *l* of Band 3
213	Erase power *m* of Band 3
214	Pulse width *n* of Band 3
215	Recording strategy of Band 3
216	Write power *l* of Band 4
217	Erase power *m* of Band 4
218	Pulse width *n* of Band 4
219	Recording strategy of Band 4
220	Write power *l* of Band 5
221	Erase power *m* of Band 5
222	Pulse width *n* of Band 5
223	Recording strategy of Band 5
224	Write power *l* of Band 6
225	Erase power *m* of Band 6
226	Pulse width *n* of Band 6
227	Recording strategy of Band 6
228	Write power *l* of Band 7
229	Erase power *m* of Band 7
230	Pulse width *n* of Band 7
231	Recording strategy of Band 7
232	Write power *l* of Band 8
233	Erase power *m* of Band 8
234	Pulse width *n* of Band 8
235	Recording strategy of Band 8
236	Write power *l* of Band 9
237	Erase power *m* of Band 9
238	Pulse width *n* of Band 9
239	Recording strategy of Band 9

Copyright International Organization for Standardization
Provided by IHS under license with ISO
No reproduction or networking permitted without license from IHS
Not for Resale

Annex F

(normative)

Definition of the overwrite pulse

The waveform of the overwrite pulses shall be as given in figure F.1. This waveform shall have three level which are write power level, erase power level and read power level.

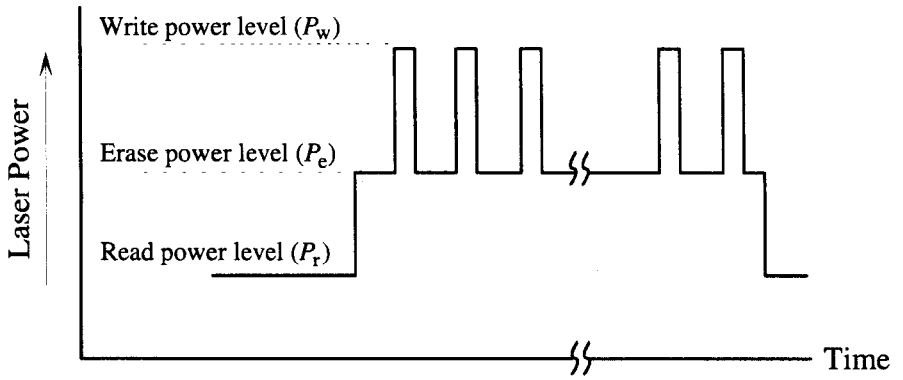

Figure F.1 - The wave form of overwrite pulse

The shape of the write pulse shall be as given in figure F.2. The rise and fall times T_r and T_f shall each be less than 10 nsec, when the write pulse width T_p exceeds 50 nsec. When T_p is less than 50 nsec, T_r and T_f shall each be less than 0,2 T_p nsec.

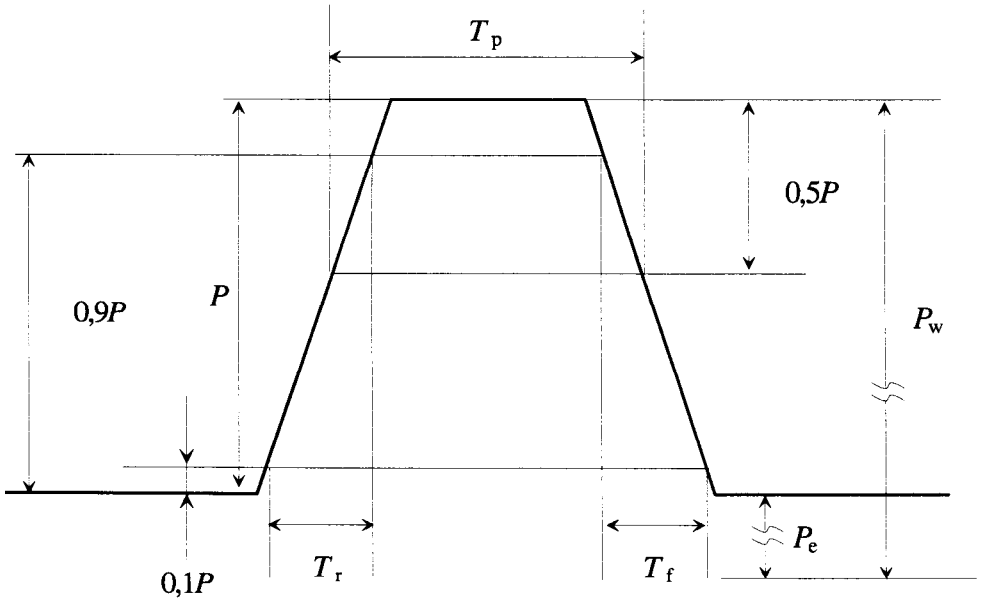

P_w: write power T_r : rise time
P_e : erase power T_f : fall time
P : Pw-Pe T_p : write pulse width

Figure F.2 - Definition of the pulse shape

Copyright International Organization for Standardization
Provided by IHS under license with ISO
No reproduction or networking permitted without license from IHS
Not for Resale

Annex G

(normative)

Air cleanliness class 100 000

The classification of air cleanliness is based on a particle count with a maximum allowable number of specified minimum sized particles per unit volume, and on a statistical average particle size distribution.

G.1 Definition

The particle count shall not exceed a total of 3 500 000 particles per cubic metre of a size 0,5 µm and larger.

The statistical average particle size distribution is given in figure G.1. Class 100 000 means that 3 500 000 particles per cubic metre of a size of 0,5 µm and larger are allowed, but only 25 000 particles per cubic metre of a size of 5,0 µm and larger.

It should be recognized that single sample distribution may deviate from this curve because of local or temporary conditions. Counts below 350 000 particles per cubic metre are unreliable except when a large number of samplings is taken.

G.2 Test method

For particles of sizes 0,5 µm to 5,0 µm, equipment employing light-scattering principles shall be used. The air in the controlled environment is sampled at a known flow rate. Particles contained in the sampled air are passed through an illuminated sensing zone in the optical chamber of the instrument. Light scattered by individual particles is received by a photo detector which converts the light pulses into electrical current pulses. An electronic system relates the pulse height to particle size and counts the pulses such that the number of particles in relation to particle size is registered or displayed.

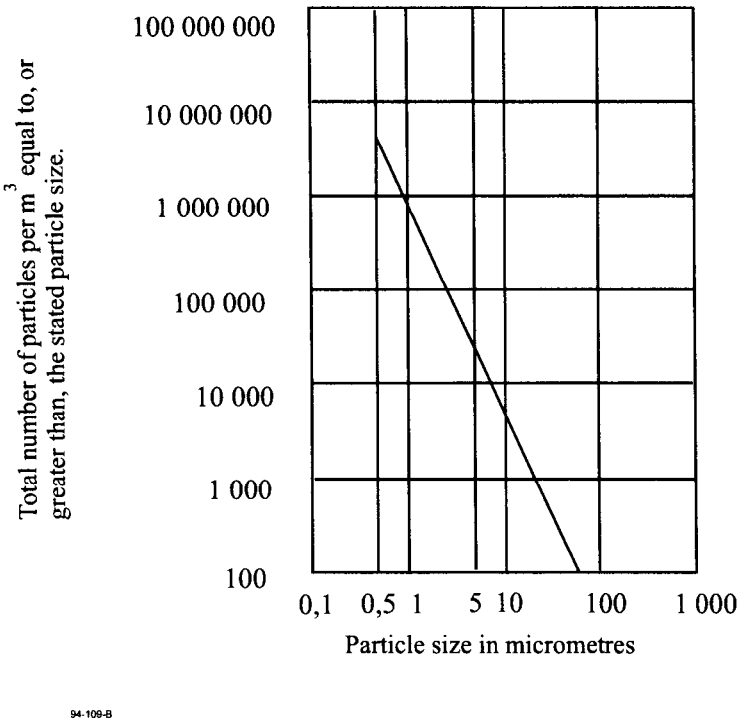

Figure G.1 - Particle size distribution curve

Copyright International Organization for Standardization
Provided by IHS under license with ISO
No reproduction or networking permitted without license from IHS
Not for Resale

Annex H

(normative)

Position of the cartridge relative to the reference planes

This annex shows the position of the cartridge relative to the reference planes, as specified in 10.2.

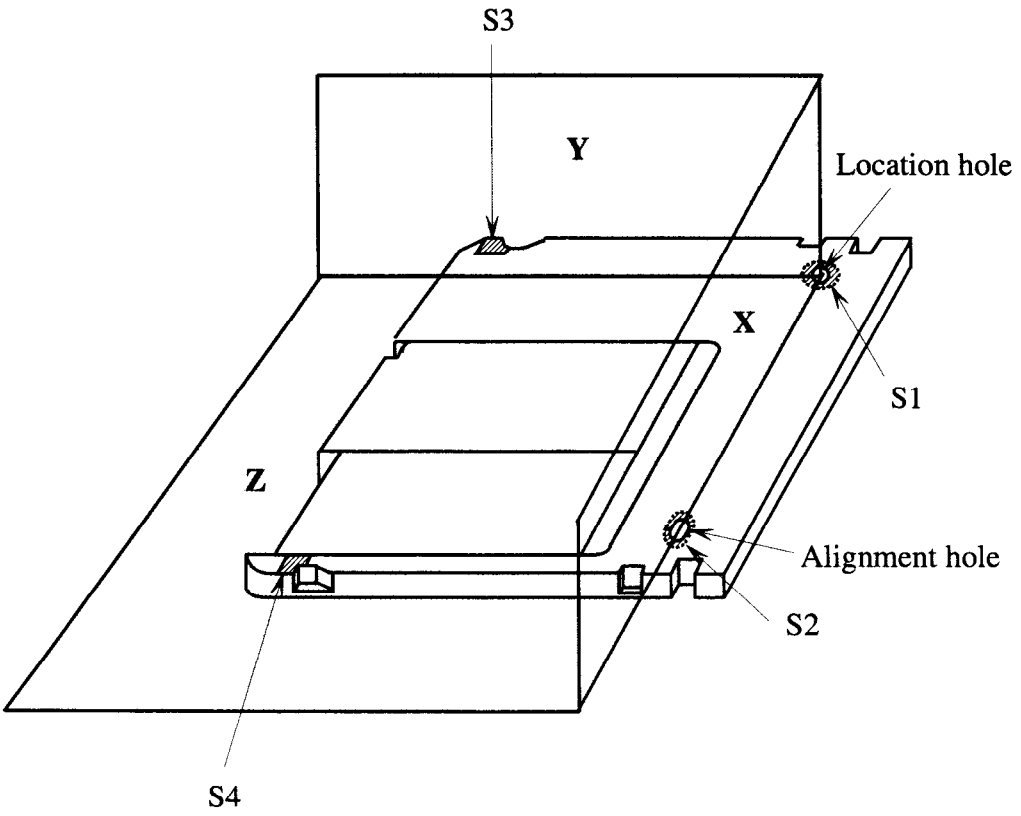

Figure H.1 - Position of the cartridge

Copyright International Organization for Standardization
Provided by IHS under license with ISO
No reproduction or networking permitted without license from IHS
Not for Resale

Annex J

(normative)

Relaxation by zones of the requirements for signals

Table J.1 shows the zones in which the requirements specified in the body of this International Standard shall be satisfied and those in which they are relaxed.

indicates the zones in which the values of the signals shall be within the range specified.

indicates the zones in which the range is extended from 80 % of the lower limit to 120 % of the upper limit. The requirement for uniformity is extended from ± 12 % to ± 20 %.

No marking indicates the zones for which the requirements are not applicable.

Table J.1 - Requirements for signals in each zone

CLAUSE	SIGNAL	ZONES								
		LEAD IN	TEST			DATA	TEST			CONTROL
			DRIVE	M.F.G	SERVO		SERVO	M.F.G	DRIVE	ZONE
11.5.4	Reflectance									
21.1.a)	PP									
21.1.b)	PP									
21.2.a)	DPP									
21.2.b)	DPP (first) DPP (second)									
21.3	On Track									
22.1 22.2 22.3	SM VFO_1, VFO_2 AM, ID, PA									
23	Embossed Data									
24.3.2 24.4.1	Write Power Erase Power									
25.1 25.2 25.3 26	Resolution NBSNR Cross Talk Erase Char.									

Copyright International Organization for Standardization
Provided by IHS under license with ISO
No reproduction or networking permitted without license from IHS
Not for Resale

Annex K

(informative)

Track deviation measurement

The deviation of a track from its nominal location is measured in the same way as a drive sees a track, i.e. through a tracking servo. The strength of the reference servo used for the test is in general less than the strength of the same servo in a normal drive. The difference in strength is intended for margins in the drive. The deviation of the track is related to the tracking error between the track and the focus of the optical beam, remaining after the reference servo. The tracking error directly influences the performance of the drive, and is the best criterion for testing track deviations.

The specification of the axial and radial track deviations can be described in the same terms. Therefore, this annex applies to both axial and radial track deviations.

K.1 Relation between requirements

The acceleration required by the motor of the tracking servo to make the focus of the optical beam follow the tracks on the disk (see 11.4.6 and 11.4.8) is a measure for the allowed deviations of the tracks. An additional measure is the allowed tracking error between the focus and the track (see 20.2.4). The relation between both is given in figure K1, where the maximum allowed amplitude of a sinusoidal track deviation is given as function of the frequency of the deviation. It is assumed in the figure that there is only one sinusoidal deviation present at a time.

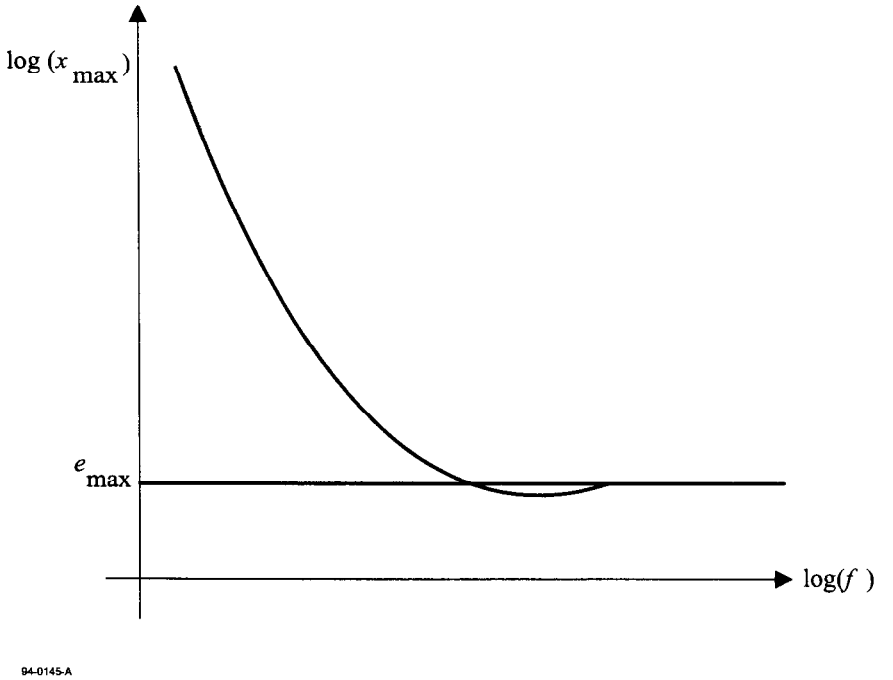

Figure K .1 - Maximum allowed amplitude of a single, sinusoidal track deviation

At low frequencies, the maximum allowed amplitude x_{max} is given by

$$x_{max} = a_{max} / (2\pi f)^2 \quad (1)$$

where a_{max} is the maximum acceleration of the servo motor. At high frequencies we have

$$x_{max} = e_{max} \quad (2)$$

where e_{max} is the maximum allowed tracking error. The connection between both frequency regions is given in K.3.

Copyright International Organization for Standardization
Provided by IHS under license with ISO
No reproduction or networking permitted without license from IHS Not for Resale

K.2 Reference Servo

The above restriction of the track deviations is equal to the restriction of the track deviations for a Reference Servo. A Reference Servo has a well-defined transfer function, and reduces a single, sinusoidal track deviation with amplitude x_{max} to a tracking error e_{max} as in figure K.1.

The open-loop transfer function of the Reference Servo shall be

$$H_s(i\omega) = \frac{1}{c} \times \left(\frac{\omega_0}{i\omega} \right)^2 \times \frac{1 + \frac{ic\omega}{\omega_0}}{1 + \frac{i\omega}{c\omega_0}} \qquad (3)$$

where $i = \sqrt{-1}$, $\omega = 2\pi f$ and $\omega_0 = 2\pi f_0$, with f_0 the 0 dB frequency of the open-loop transfer function. The constant c gives the cross-over frequencies of the lead-lag network of the servo: the lead break frequency $f_1 = f_0 / c$ and the lag break frequency $f_2 = f_0 \times c$. The reduction of a track deviation x to a tracking error e by the reference servo is given by

$$\frac{e}{x} = \frac{1}{1 + H_s} \qquad (4)$$

If the 0 dB frequency is specified as

$$\omega_0 = \sqrt{\frac{a_{max} c}{e_{max}}} \qquad (5)$$

then a low-frequency track deviation with an acceleration a_{max} will be reduced to a tracking error e_{max}, and a high-frequency track deviation will not be reduced. The curve in figure K.1 is given by

$$x_{max} = e_{max} \mid 1 + H_S \mid \qquad (6)$$

The maximum acceleration required from the motor of this reference servo is

$$a_{max}(\text{motor}) = e_{max}\, \omega^2 \mid 1 + H_S \mid \qquad (7)$$

At low frequencies ($f < f_0 / c$) applies

$$a_{max}(\text{motor}) = a_{max}(\text{track}) = \frac{\omega_0^{\,2} e_{max}}{c} \qquad (8)$$

Hence, it is permitted to use a_{max}(motor) as specified for low frequencies in 11.4.6 and 11.4.8 for the calculation of ω_0 of a reference servo.

K.3 Requirement for track deviations

The track deviations shall be such that, when tracking with a Reference Servo on a disk rotating at the specified frequency, the tracking error shall not be larger than e_{max} during more than 12 µs.

The open-loop transfer function of the Reference Servo for axial and radial tracking shall be given by equation (3) within an accuracy such that $|1 + H|$ does not differ by more than ± 20 % from its nominal value in a bandwidth from 30 Hz to 100 kHz. The constant c shall be 3. The 0 dB frequency $\omega_0 / (2\pi)$ shall be given by equation (5), where a_{max} and e_{max} for axial and radial tracking are specified in 20.2.4, 11.4.6 and 11.4.8.

K.4 Measurement implementation

Three possible implementations for an axial or radial measurement system have been given below. H_a is the open-loop transfer function of the actual tracking servo of the drive, H_s is the transfer function for the Reference Servo as given in equation (3). x and y are the position of the track and the focus of the optical beam. e_s is the tracking error after a Reference Servo, which signal has to be checked according to the previous paragraph.

Copyright International Organization for Standardization
Provided by IHS under license with ISO
No reproduction or networking permitted without license from IHS Not for Resale

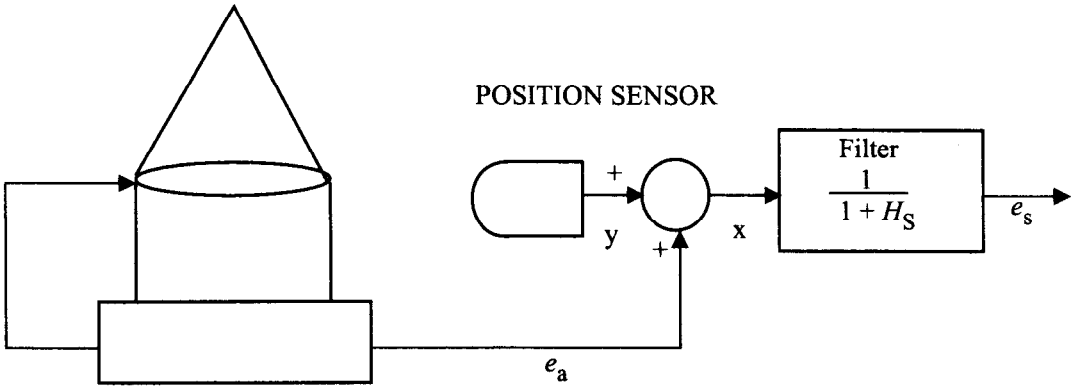

Figure K.2 - Implementation of a Reference Servo by filtering the track position signal with the reduction characteristics of the Reference Servo

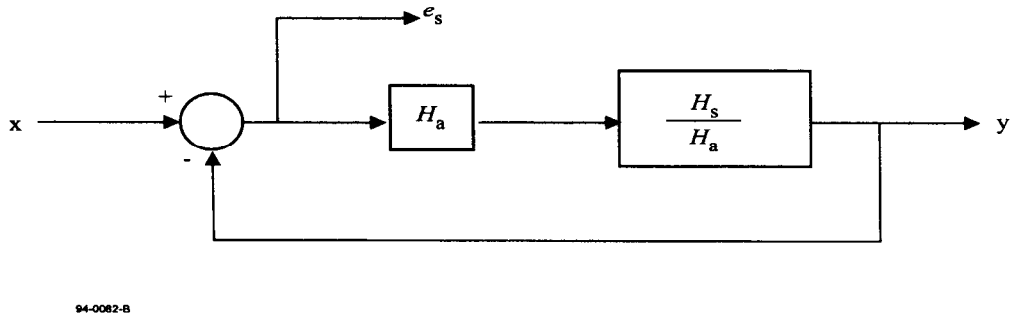

Figure K.3 - Implementation of a Reference Servo by changing the transfer function of the actual servo

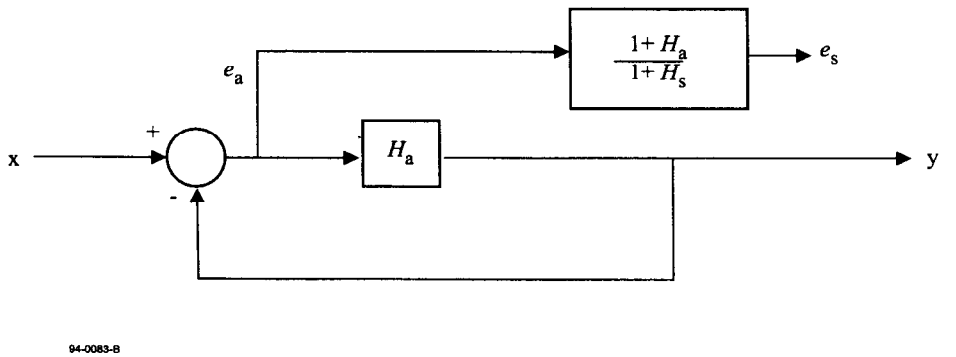

Figure K.4 - Implementation of a Reference Servo by changing the tracking error of the actual servo

The optimum implementation depends on the characteristics of H_a and H_S. Good results for motors in leaf springs are often obtained by using separate circuits in a low and high frequency channel. The implementation of figure K.2 is used in the low-frequency channel, while figure K.3 or K.4 is used in the high-frequency channel. The signals from both channels are added

Copyright International Organization for Standardization
Provided by IHS under license with ISO
No reproduction or networking permitted without license from IHS
Not for Resale

with a reversed cross-over filter to get the required tracking error. In the low-frequency channel one can also use the current through the motor as a measure of the acceleration of the motor, provided the latter is free from hysteresis. The current must be corrected for the transfer function of the motor and then be converted to a tracking error with a filter with a transfer function $e/a = e/(x\omega^2)$, derived from equation (4).

Copyright International Organization for Standardization
Provided by IHS under license with ISO
No reproduction or networking permitted without license from IHS
Not for Resale

Annex L

(informative)

Guidelines for sector replacement

Clause 19 assumes that a sector is defective and will be replaced by the defect management, for instance when any of the following conditions exist:

a) a sector has at least two of its three ID fields each with an error as detected by the CRC check;

b) the Sector Mark cannot be recognized;

c) a column in the Data field (see table D.1) contains more than three defective bytes A_n.

Copyright International Organization for Standardization
Provided by IHS under license with ISO
No reproduction or networking permitted without license from IHS
Not for Resale

Annex M

(informative)

Derivation of the operating climatic environment

This annex gives some background on how some of the conditions of the operating environment in 8.1.2 have been derived.

M.1 Standard climatic environment classes

The conditions of the ODC operating environment are, with a few exceptions mentioned below, based on parameter values of the IEC Standard climatic environment class 3K3 described in IEC publication 721-3-3:1987[1]. This publication defines environmental classes for stationary use of equipment at weather-protected locations.

The IEC class 3K3 refers to climatic conditions which

"... may be found in normal living or working areas, e.g. living rooms, rooms for general use (theatres, restaurants, etc.), offices, shops, workshops for electronic assemblies and other electrotechnical products, telecommunication centres, storage rooms for valuable and sensitive products."

M.2 Overtemperature considerations

While IEC class 3K3 defines the limits for the room climate only, the ODC operating environment specification in this International Standard takes into consideration also system and drive overtemperature. This means that when inserted in a drive, the ODC will sense a temperature which is above the ambient room temperature. The figures in the operating environment specification have been calculated from the assumption that this overtemperature may be up to 20 °C.

M.3 Absolute humidity

The introduction of the parameter

absolute humidity [unit: g water / m^3 of air]

is very useful when studying overtemperature. When the temperature rises inside a drive, the relative humidity goes down but the absolute humidity remains substantially constant. So, making room for overtemperature in the operating environment specification affects not only the upper temperature limit but also the lower relative humidity limit. The relationship between these parameters is shown in the climatogram (the relative humidity versus temperature map) of the ODC operating environment, figure M.1.

The absolute humidity restrictions influence the operating environment in the following two ways:

a) Combinations of high temperatures and high relative humidities are excluded. Such combinations could have negative influence on the performance and the life of ODCs.

b) Combinations of low temperatures and low relative humidities are excluded. Such combinations are very unlikely to occur in worldwide normal office environments.

M.4 Deviations from the IEC Standard environment class

Apart from the changes introduced by the overtemperature considerations mentioned above, there are a few more parameter values which are not based on IEC class 3K3. These are:

- Atmospheric pressure

  The IEC class 3K3 lower limit of 70 kPa has been extended to 60 kPa. ODCs according to this International Standard show no intrinsic pressure sensitivity and 70 kPa excludes some possible markets for ODCs.

---

[1] *Classification of environmental conditions - Part 3: Classification of groups of environmental parameters and their severities. Stationary use at weatherprotected locations.*

Copyright International Organization for Standardization
Provided by IHS under license with ISO
No reproduction or networking permitted without license from IHS Not for Resale

- Absolute humidity

  The IEC class 3K3 value for the upper limit of 25 g/m^3 has been raised to 30 g/m^3 in view of some expected operation in portable devices outside the controlled office environment.

- Temperature

  The maximum temperature around the ODC, i.e. room temperature plus overtemperature, has been limited to 55 °C (while IEC class 3K3 + 20 °C would have become 60 °C). For ODCs according to this International Standard, however, the 55 °C limit is considered to be a physical limit above which operation (as well as storage) is not safe.

  This means that equipment designers may want to ensure adequate cooling inside the drive especially when the room temperature approaches the upper IEC class 3K3 limit of 40 °C.

- Further

  The rates of change (the gradients) of temperature and relative humidity are not according to IEC class 3K3.

M.5 Wet bulb temperature specifications

Instead of specifying limits for the absolute humidity, some of the earlier standards for ODCs as well as those for other digital data storage media often used restrictions of the parameter

wet bulb temperature [unit: °C]

in order to avoid too severe combinations of high temperatures and high relative humidities.

In order to facilitate comparisons between different specifications, figure M.2 and table M.1 show wet bulb temperatures of interest for the ODC operating environment, as well as for the testing and storage environments. Since wet bulb temperatures vary slightly with the atmospheric pressure, the diagram is valid for the normal pressure of 101,3 kPa only.

Copyright International Organization for Standardization
Provided by IHS under license with ISO
No reproduction or networking permitted without license from IHS Not for Resale

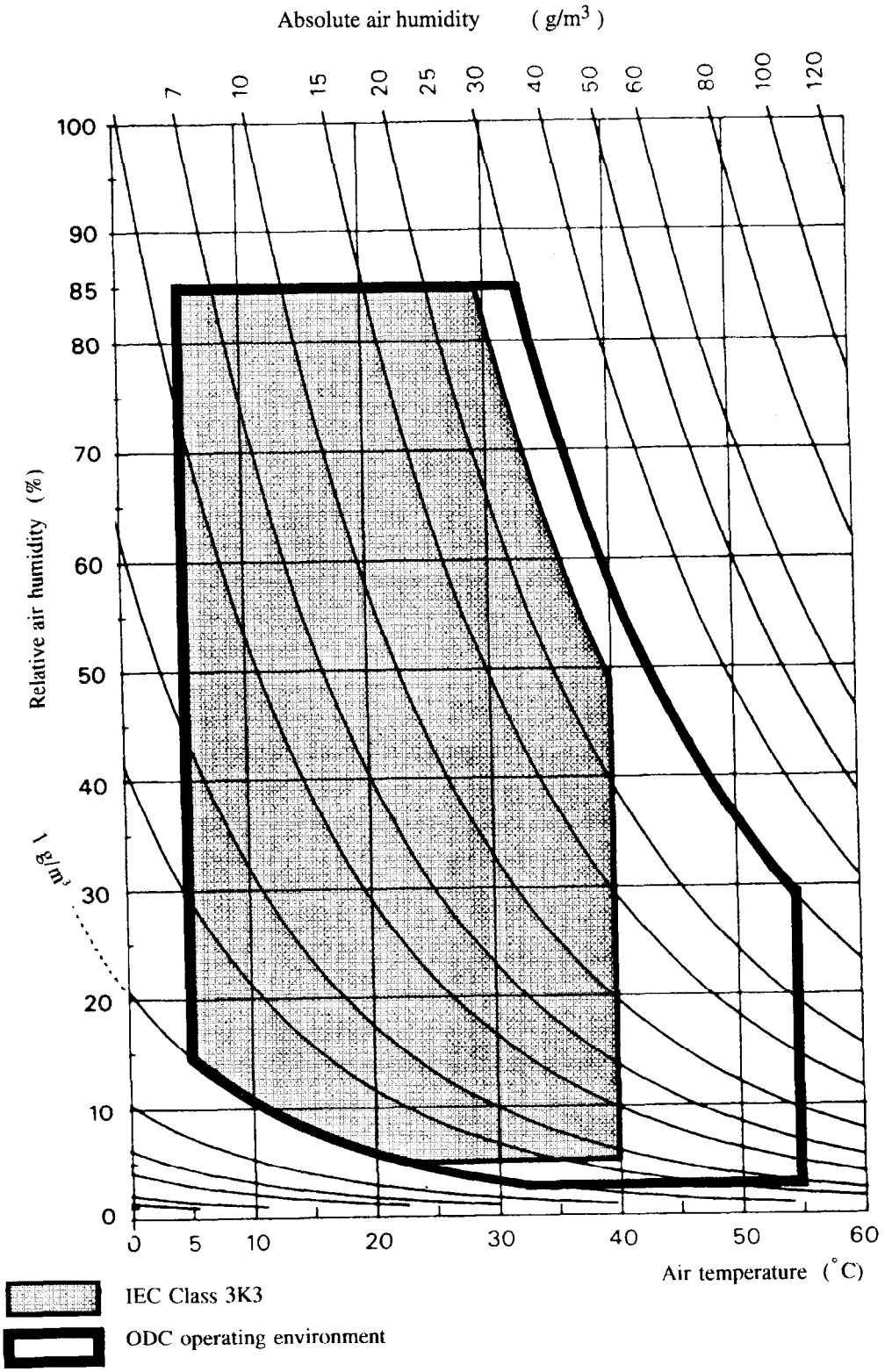

Figure M.1 - Climatogram of IEC Class 3K3 and the ODC operating environment

Copyright International Organization for Standardization
Provided by IHS under license with ISO
No reproduction or networking permitted without license from IHS
Not for Resale

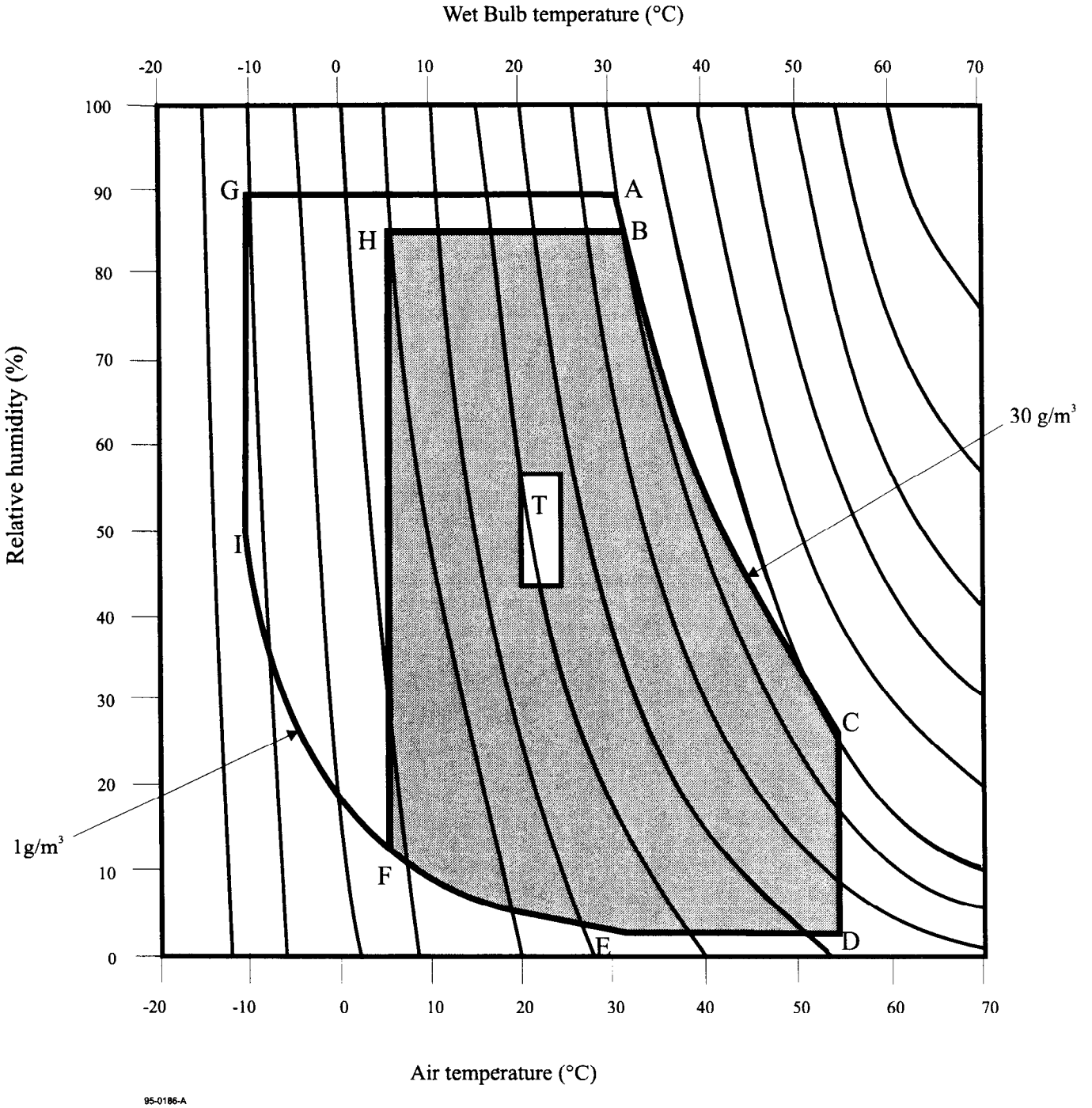

Figure M.2 - Wet bulb temperatures of the operating and storage environments

Copyright International Organization for Standardization
Provided by IHS under license with ISO
No reproduction or networking permitted without license from IHS
Not for Resale

Table M.1 - Position of the main points in figure M.2

Position	Air temperature	Relative humidity	Wet bulb temperature
A	31,7 °C	90,0 %	30,3 °C
B	32,8 °C	85,0 %	30,6 °C
C	55,0 °C	28,8 %	35,5 °C
D	55,0 °C	3,0 %	21,9 °C
E	31,7 °C	3,0 %	12,1 °C
F	5,0 °C	14,6 %	-1,4 °C
G	-10,0 °C	90,0 %	-10,3 °C
H	5,0 °C	85,0 %	4,0 °C
I	-10,0 °C	46,9 %	-11,8 °C
Test environment (T)	23,0 °C ± 2,0 °C	50,0 % ± 5,0 %	--------
Storage environment	is determined by A-B-C-D-E-F-I-G-A		
Operating environment	is determined by B-C-D-E-F-H-B		

Copyright International Organization for Standardization
Provided by IHS under license with ISO
No reproduction or networking permitted without license from IHS
Not for Resale

Annex N

(informative)

Transportation

N.1 General

As transportation occurs under a wide range of temperature and humidity variations, for differing periods, by many methods of transport and in all parts of the world it is not possible to specify conditions for transportation or for packaging.

N.2 Packaging

The form of packaging should be agreed between sender and recipient or, in the absence of such agreement, is the responsibility of the sender. It should take account of the following hazards.

N.2.1 Temperature and humidity

Insulation and wrapping should be designed to maintain the conditions for storage over the estimated period of transportation.

N.2.2 Impact loads and vibration

a) Avoid mechanical loads that would distort the shape of the cartridge.

b) Avoid dropping the cartridge.

c) Cartridges should be packed in a rigid box containing adequate shock-absorbent material.

d) The final box should have a clean interior and a construction that provides sealing to prevent the ingress of dirt and moisture.

Copyright International Organization for Standardization
Provided by IHS under license with ISO
No reproduction or networking permitted without license from IHS
Not for Resale

Annex P

(informative)

Office environment

Due to their construction and mode of operation optical disk cartridges have considerable resistance to the effects of dust particles around and inside the disk drive. Consequently it is not generally necessary to take special precaution to maintain a sufficiently low concentration of dust particles.

Operation in heavy concentrations of dust should be avoided, e.g. in a machine shop or on a building site.

Office environment implies an environment in which personnel may spend a full working day without protection and without suffering temporary or permanent discomfort.

Copyright International Organization for Standardization
Provided by IHS under license with ISO
No reproduction or networking permitted without license from IHS
Not for Resale

Annex Q

(informative)

Measurement of birefringence

Q.1 Optical conditions

Optical conditions shall be as defined in 9.2 a) to g).

Q.2 Measuring set-ups

There are two possible set-ups for measurement of birefringence. In either case, the design of the optical system shall be such that the detected light reflected from the entrance surface is minimized, so as not to influence accuracy of the measurement.

Q.2.1 First Set- up

The first set-up for measuring birefringence of B is shown in figure Q.1.

The light power which is emitted from the laser diode A is I. After passing through a beam splitter BS and a polarizing beam splitter E, the light is converted to right-handed circularly polarized light by a quarter-wave plate F.

Approximately $(1/2)I$ reaches the disk. If the reflectivity of the disk is R, $(1/2)IR$ is reflected back. Due to the birefrengence of the disk, the reflected light is composed of a fraction $(1-B)$ of the left-handed circularly polarized light and a fraction B of right-handed circularly polarized light.

Then, $(1/2)RI(1-B)$ arrives at the detector K_2 and $(1/4)RIB$ at the detector K1. The conversion factor from light intensity to current is given by C_1 and C_2 for the photodiode K_1 and K_2, respectively. Generated current of D_1 and D_2 at each detector are given as following.

$$D_1=(1/4)C_1RIB \text{ and } D_2=(1/2)C_2\,RI(1-B)$$

The value of B can be estimated from the following equation.

$$B=\frac{D_1}{D_1+D_2}=\frac{(1/4)C_1B}{(1/4)C_1B+(1/2)C_2(1-B)}$$

The last equality holds when $C_1=2\,C_2$. Any losses in the optical paths can be compensated for by fine-tuning the ratio C_1/C_2. The optical components shall be aligned such that in the absence of birefringence, D_2 is at a maximum value and D_1 as close to zero as possible.

Q.2.2 Second Set-up

The second set-up measuring birefringence of B is shown in figure Q.2.

The components shall be aligned in such a way that, in the absence of birefringence, D_2 is at a maximum value and D_1 at the a minimum value. P is a linear polarizer. The amount of light reaching D_1 in the absence of birefringence is $(1/8)RIB$ and that of D_2 is $(1/8)RI(1-B)$, assuming all non-polarizing beam splitters to be fifty-fifty splitters. The conversion factor are set to $C_1=C_2$

$$B=\frac{D_1}{D_1+D_2}=\frac{C_1B}{C_1B+C_2(1-B)}$$

Copyright International Organization for Standardization
Provided by IHS under license with ISO
No reproduction or networking permitted without license from IHS
Not for Resale

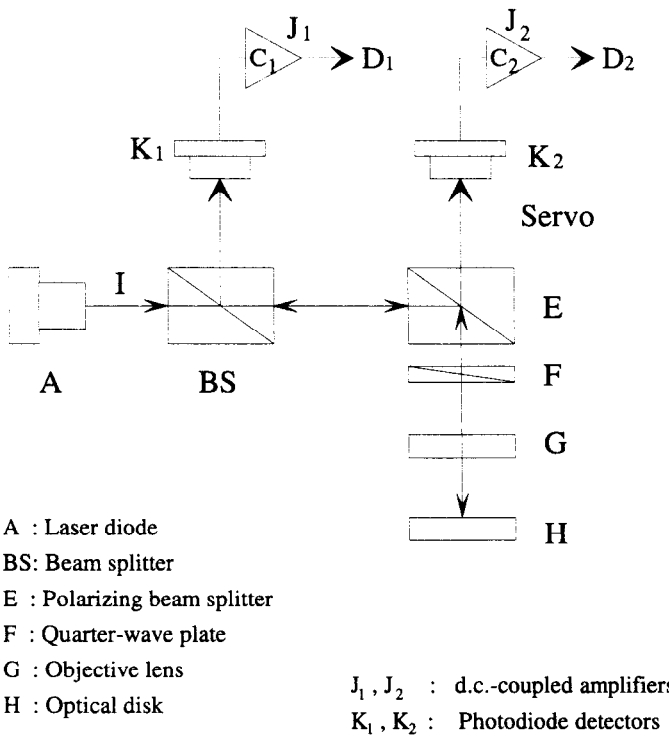

Figure Q.1 - Optical system of the birefringence measurement 1

Q.2.3 Calibration method

There are two methods of calibration. Insert a sample with a known amount of birefringence in a parallel beam, and adjust C_1 and C_2 to give B the required value. In the second method, such an amount of birefringence is inserted, that D_1 falls to half its value of non-birefringence case. C_1 and C_2 should be adjusted to make $B = 0,5$

Copyright International Organization for Standardization
Provided by IHS under license with ISO
No reproduction or networking permitted without license from IHS
Not for Resale

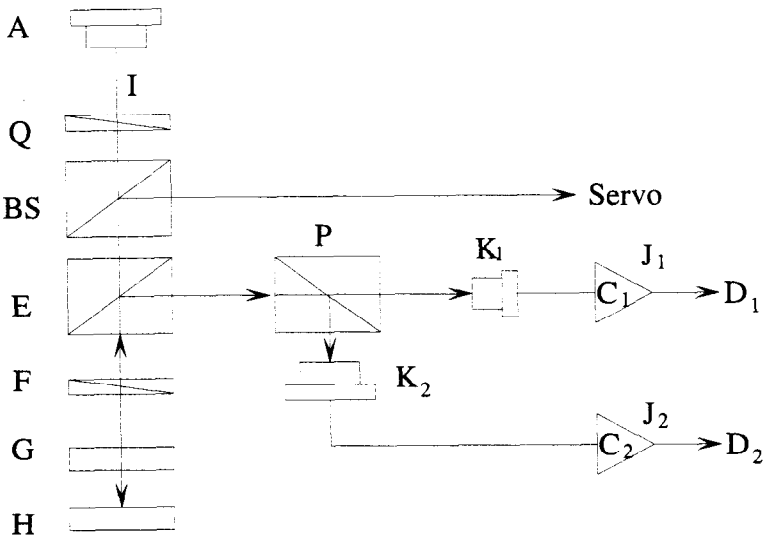

A : Laser diode
BS: Beam splitter
E : Beam splitter
F : Quarter-wave plate
G : Objective lens
H : Optical disk

J_1, J_2 : d.c.-coupled amplifiers
K_1, K_2 : Photodiode detectors
P : Polarizing beam splitter
Q : Polarizer

Figure Q.2 - Optical system of the birefringence measurement 2

Q.2.4 Conversion to the retardation

The retardation d of the measured value B is given by the following equation.

$$B = \sin^2(\pi d / \lambda)$$

Copyright International Organization for Standardization
Provided by IHS under license with ISO
No reproduction or networking permitted without license from IHS
Not for Resale

© ISO/IEC

ICS 35.220.30

Descriptors: data processing, information interchange, data recording, data recording devices, optical disks, optical disk cartridges, specifications, dimensions, characteristics, physical properties, mechanical properties, optical properties, information formats, track formats, tests, performance tests, interchangeability.

Price based on 90 pages

Copyright International Organization for Standardization
Provided by IHS under license with ISO
No reproduction or networking permitted without license from IHS

Not for Resale