INTERNATIONAL STANDARD

ISO/IEC 15457-3

Second edition
2008-03-01

Identification cards — Thin flexible cards —

Part 3: Test methods

Cartes d'identification — Cartes flexibles fines —

Partie 3: Méthodes d'essai

Reference number
ISO/IEC 15457-3:2008(E)

© ISO/IEC 2008

Copyright International Organization for Standardization
Provided by IHS under license with ISO
No reproduction or networking permitted without license from IHS

Not for Resale

PDF disclaimer

This PDF file may contain embedded typefaces. In accordance with Adobe's licensing policy, this file may be printed or viewed but shall not be edited unless the typefaces which are embedded are licensed to and installed on the computer performing the editing. In downloading this file, parties accept therein the responsibility of not infringing Adobe's licensing policy. The ISO Central Secretariat accepts no liability in this area.

Adobe is a trademark of Adobe Systems Incorporated.

Details of the software products used to create this PDF file can be found in the General Info relative to the file; the PDF-creation parameters were optimized for printing. Every care has been taken to ensure that the file is suitable for use by ISO member bodies. In the unlikely event that a problem relating to it is found, please inform the Central Secretariat at the address given below.



COPYRIGHT PROTECTED DOCUMENT

© ISO/IEC 2008

All rights reserved. Unless otherwise specified, no part of this publication may be reproduced or utilized in any form or by any means, electronic or mechanical, including photocopying and microfilm, without permission in writing from either ISO at the address below or ISO's member body in the country of the requester.

ISO copyright office
Case postale 56 • CH-1211 Geneva 20
Tel. + 41 22 749 01 11
Fax + 41 22 749 09 47
E-mail copyright@iso.org
Web www.iso.org

Published in Switzerland

Copyright International Organization for Standardization
Provided by IHS under license with ISO
No reproduction or networking permitted without license from IHS
Not for Resale

© ISO/IEC 2008 – All rights reserved

Contents

Page

Foreword ... vii
1 Scope ... 1
2 Normative references ... 1
3 Terms and definitions ... 2
4 Test methods for physical characteristics ... 4
4.1 General ... 4
4.1.1 Reference ... 4
4.1.2 Apparatus ... 4
4.1.3 Sampling, preparation and storage of samples ... 4
4.1.4 Conditioning and testing environment ... 4
4.1.5 Test report ... 5
4.2 Dimensions (except thickness) ... 5
4.2.1 Reference ... 5
4.2.2 Principle ... 5
4.2.3 Procedure ... 5
4.3 Thickness ... 5
4.3.1 Reference ... 5
4.3.2 Apparatus ... 5
4.3.3 Procedure ... 5
4.4 Separation force ... 5
4.4.1 Reference ... 5
4.4.2 Principle ... 6
4.4.3 Apparatus ... 6
4.4.4 Procedure ... 6
4.4.5 Expression of result ... 6
4.5 Reel winding ... 6
4.5.1 Reference ... 6
4.5.2 Apparatus ... 7
4.5.3 Procedure ... 7
4.6 Bursting strength ... 7
4.6.1 Reference ... 7
4.6.2 Procedure ... 7
4.7 Stiffness ... 8
4.7.1 Reference ... 8
4.7.2 Procedure ... 8
4.8 Folding endurance ... 8
4.8.1 Reference ... 8
4.8.2 Apparatus ... 8
4.8.3 Procedure ... 8
4.9 Ash content ... 8
4.9.1 Reference ... 8
4.9.2 Procedure ... 8
4.10 Smoothness ... 8
4.10.1 Reference ... 8
4.10.2 Procedure ... 8
4.11 Opacity (paper backing) and opacity (700-1 000 nm) ... 9
4.11.1 Reference ... 9
4.11.2 Procedure ... 9
4.12 Coefficient of friction and destacking force ... 9
4.12.1 Reference ... 9

© ISO/IEC 2008 – All rights reserved

Copyright International Organization for Standardization
Provided by IHS under license with ISO
No reproduction or networking permitted without license from IHS
Not for Resale

4.12.2 Procedure 9
4.13 Reflectance factor 10
4.13.1 Reference 10
4.13.2 Procedure 10
4.14 Air permeance 10
4.14.1 Reference 10
4.14.2 Procedure 10
4.15 Sizing and pen-writing factor 10
4.15.1 Reference 10
4.15.2 Principle 11
4.15.3 Apparatus and reagents 11
4.15.4 Preparation of test pieces 12
4.15.5 Procedure 12
4.15.6 Expression of results 13
4.16 Tear resistance 13
4.16.1 Reference 13
4.16.2 Procedure 13
4.17 Delamination resistance 14
4.17.1 Reference 14
4.17.2 Principle 14
4.17.3 Apparatus 14
4.17.4 Preparation for test 15
4.17.5 Procedure 15
4.17.6 Expression of results 16
4.17.7 Test report 16
4.18 Cold-crack temperature (brittleness) 17
4.18.1 Reference 17
4.18.2 Procedure 17
4.18.3 Expression of results 19

5 Test methods for magnetic stripe physical characteristics 20
5.1 Preparation and storage of samples 20
5.2 Conditioning and test environments 20
5.3 Protrusion 20
5.3.1 Reference 20
5.3.2 Principle 20
5.3.3 Apparatus 20
5.3.4 Procedure 20
5.4 Profile deviation 20
5.4.1 Reference 20
5.4.2 Principle 21
5.4.3 Procedure 21
5.5 Roughness R_a and R_z 22
5.5.1 Reference 22
5.5.2 Principle 22
5.5.3 Procedure 22
5.6 Warpage 22
5.6.1 Reference 22
5.6.2 Procedure 22
5.7 Adherence 22
5.7.1 Reference 22
5.7.2 Apparatus 22
5.7.3 Procedure 22
5.8 Wear test 23
5.8.1 Reference 23
5.8.2 Principle 23
5.8.3 Procedure 23
5.9 Dimensional measurement of the magnetic stripe 23
5.9.1 Principle 23
5.9.2 Procedure 23

© ISO/IEC 2008 – All rights reserved
Copyright International Organization for Standardization
Provided by IHS under license with ISO
No reproduction or networking permitted without license from IHS
Not for Resale

6 Test methods for static magnetic characteristics 23
6.1 Principle 23
6.2 Apparatus 24
6.3 Preparation and storage of sample 24
6.3.1 Preparation 24
6.3.2 Storage 25
6.3.3 Conditioning and testing environment 25
6.4 Procedure 25
6.4.1 VSM 25
6.4.2 HM 26
6.5 Expression of results 26
6.6 Coercivity, H_{cM} 27
6.6.1 Reference 27
6.6.2 Procedure 27
6.7 Squareness, SQ 27
6.7.1 Reference 27
6.7.2 Procedure 28
6.8 Switching field distribution, (SF_D) 28
6.8.1 Reference 28
6.8.2 Procedure 28
6.9 Test report 28

7 Test method for dynamic magnetic characteristics 28
7.1 Principle 28
7.2 Reference cards 29
7.3 Apparatus 29
7.3.1 Measuring instrument for classes L and S 29
7.3.2 Measuring instrument for class H 29
7.4 Preparation and preservation of test samples 29
7.4.1 Preparation 29
7.4.2 Preservation 29
7.4.3 Conditioning and testing environment 30
7.5 Test procedure 30
7.5.1 Test densities (D_{max} and D_{min}) 30
7.6 Expression of results 30
7.6.1 Resolution 30
7.6.2 Modulation 30
7.7 Test report 31

8 Tests for cards containing contactless chips and antennas 31
8.1 Reliability of the chip/antenna connection for a strip of connected cards 31
8.1.1 Reference 31
8.1.2 Principle 31
8.1.3 Equipment 31
8.1.4 Procedure 32
8.1.5 Test report 32
8.2 Reliability of the chip/antenna connection for a single card 32
8.2.1 Reference 32
8.2.2 Principle 32
8.2.3 Equipment 33
8.2.4 Procedure 33
8.2.5 Test report 33
8.3 Test for chip/antenna connection withstanding scratch test 34
8.3.1 Reference 34
8.3.2 Principle 34
8.3.3 Equipment 34
8.3.4 Procedure 35
8.3.5 Test report 35
8.4 Test for card withstanding to Crumpling / Folding 35
8.4.1 Reference 35
8.4.2 Principle 35

© ISO/IEC 2008 – All rights reserved

Copyright International Organization for Standardization
Provided by IHS under license with ISO
No reproduction or networking permitted without license from IHS
Not for Resale

8.4.3 Procedure 35
8.4.4 Test report 36
Bibliography 37

© ISO/IEC 2008 – All rights reserved
Copyright International Organization for Standardization
Provided by IHS under license with ISO
No reproduction or networking permitted without license from IHS
Not for Resale

Foreword

ISO (the International Organization for Standardization) is a worldwide federation of national standards bodies (ISO member bodies). The work of preparing International Standards is normally carried out through ISO technical committees. Each member body interested in a subject for which a technical committee has been established has the right to be represented on that committee. International organizations, governmental and non-governmental, in liaison with ISO, also take part in the work. ISO collaborates closely with the International Electrotechnical Commission (IEC) on all matters of electrotechnical standardization.

International Standards are drafted in accordance with the rules given in the ISO/IEC Directives, Part 2.

The main task of technical committees is to prepare International Standards. Draft International Standards adopted by the technical committees are circulated to the member bodies for voting. Publication as an International Standard requires approval by at least 75 % of the member bodies casting a vote.

Attention is drawn to the possibility that some of the elements of this document may be the subject of patent rights. ISO shall not be held responsible for identifying any or all such patent rights.

ISO/IEC 15457-3 was prepared by Technical Committee ISO/TC JTC 1, *Information technology*, Subcommittee SC 17, *Cards and personal identification*.

This second edition cancels and replaces the first edition (ISO/IEC 15457-3:2002), of which has been technically revised.

ISO/IEC 15457 consists of the following parts, under the general title *Identification cards — Thin flexible cards*:

— *Part 1: Physical characteristics*

— *Part 2: Magnetic recording technique*

— *Part 3: Test methods*

© ISO/IEC 2008 – All rights reserved

Copyright International Organization for Standardization
Provided by IHS under license with ISO
No reproduction or networking permitted without license from IHS
Not for Resale

Copyright International Organization for Standardization
Provided by IHS under license with ISO
No reproduction or networking permitted without license from IHS
Not for Resale

Identification cards — Thin flexible cards —

Part 3: Test methods

1 Scope

Thin flexible cards (TFC), the subject of this International Standard, are used to automate the controls for access to goods or services such as mass transit, highway toll systems, car parks, vouchers, stored value, etc.

For these applications, data can be written and/or read by machines using various recording techniques such as magnetic stripe, optical character recognition (OCR), bar code, etc.

This part of ISO/IEC 15457 specifies the test methods and procedures required to carry out measurements of the magnetic stripe and encoding characteristics of thin flexible cards.

Many of the standard methods available for checking physical properties of base materials are intended to be applied to samples cut from continuous material or large sheets. However, all test methods given herein, unless explicitly stated otherwise, apply to finished cards.

The test methods described are to be performed on separate samples. It is not intended that any individual card should pass through more than one test procedure, unless explicitly stated.

Acceptance criteria are not covered by this part of ISO/IEC 15457.

2 Normative references

The following referenced documents are indispensable for the application of this document. For dated references, only the edition cited applies. For undated references, the latest edition of the referenced document (including any amendments) applies.

ISO 186, *Paper and board — Sampling to determine average quality*

ISO 187, *Paper, board and pulps — Standard atmosphere for conditioning and testing and procedure for monitoring the atmosphere and conditioning of samples*

ISO 291, *Plastics — Standard atmospheres for conditioning and testing*

ISO 534, *Paper and board — Determination of thickness, density and specific volume*

ISO 1831, *Printing specifications for optical character recognition*

ISO 2144, *Paper, board and pulps — Determination of residue (ash) on ignition at 900 °C*

ISO 2409, *Paints and varnishes — Cross-cut test*

ISO 2471, *Paper and board — Determination of opacity (paper backing) — Diffuse reflectance method*

© ISO/IEC 2008 – All rights reserved

Copyright International Organization for Standardization
Provided by IHS under license with ISO
No reproduction or networking permitted without license from IHS
Not for Resale

ISO 2758, *Paper — Determination of bursting strength*

ISO 3274, *Geometrical Product Specifications (GPS) — Surface texture: Profile method — Nominal characteristics of contact (stylus) instruments*

ISO 4094, *Paper, board and pulps — International calibration of testing apparatus — Nomination and acceptance of standardizing and authorized laboratories*

ISO 4287-1, *Surface roughness — Terminology — Part 1: Surface and its parameters*

ISO 5626, *Paper — Determination of folding endurance*

ISO 5627, *Paper and board — Determination of smoothness (Bekk method)*

ISO 5629, *Paper and board — Determination of bending stiffness — Resonance method*

ISO 5636-3, *Paper and board — Determination of air permeance (medium range) — Part 3: Bendtsen method*

ISO 6383-2, *Plastics — Film and sheeting — Determination of tear resistance — Part 2: Elmendorf method*

ISO 8295, *Plastics — Film and sheeting — Determination of the coefficients of friction*

ISO 8570, *Plastics — Film and sheeting — Determination of cold-crack temperature*

ISO/IEC 7811-2, *Identification cards — Recording technique — Part 2: Magnetic stripe — Low coercivity*

ISO/IEC 7811-6, *Identification cards — Recording technique — Part 6: Magnetic stripe — High coercivity*

ISO/IEC 10373-1, *Identification cards — Test methods — Part 1: General characteristics*

ISO/IEC 10373-2, *Identification cards — Test methods — Part 2: Cards with magnetic stripes*

ISO/IEC 15457-1, *Identification cards — Thin flexible cards — Part 1: Physical characteristics*

ISO/IEC 15457-2, *Identification cards — Thin flexible cards — Part 2: Magnetic recording technique*

IEC 60454-2, *Specifications for pressure-sensitive adhesive tapes for electrical purposes — Part 2: Methods of test*

3 Terms and definitions

For the purposes of this document, the terms and definitions given in ISO/IEC 15457-1, ISO/IEC 15457-2 and the following apply.

3.1
substrate
material of which the TFC is made without any recording media

3.2
composite
material made from at least two layers of different material, one of which is paper

© ISO/IEC 2008 – All rights reserved
Copyright International Organization for Standardization
Provided by IHS under license with ISO
No reproduction or networking permitted without license from IHS
Not for Resale

3.3
reference signal amplitude
U_R
primary standard read back signal amplitude; the maximum value of the average signal amplitude of the reference card, corrected to the primary standard

3.4
reference write current
I_R
primary standard write current, obtained from the secondary reference card by measurement

3.5
reference flux
F_R
flux in the test write head when the write current is I_R

3.6
test piece
part of the sample or test sample on which the test is conducted

3.7
uncertainty of measurement
estimate characterising the range of values within which the true value of a measurand lies

[International vocabulary of basic and general terms in metrology (VIM)]

3.8
⟨optical⟩ transmittance factor
T
ratio of the measured ⟨optical⟩ flux transmitted by a specimen to the measured flux when the specimen is removed from the sampling aperture of the measuring device:

$$T = \Phi_\tau / \Phi_j$$

where

T is the transmittance factor;

Φ_τ is the transmitted ⟨optical⟩ flux;

Φ_j is the aperture flux.

[ISO 5-2:1991]

3.9
opacity
⟨optical⟩ transmission density
D_T
logarithm to the base 10 of the reciprocal of the transmittance factor:

$$D_T = \log_{10} 1/T = \log_{10} \Phi_j / \Phi_\tau$$

[ISO 5-2:1991]

© ISO/IEC 2008 – All rights reserved

Copyright International Organization for Standardization
Provided by IHS under license with ISO
No reproduction or networking permitted without license from IHS
Not for Resale

4 Test methods for physical characteristics

4.1 General

4.1.1 Reference

ISO/IEC 15457-1.

4.1.2 Apparatus

In order to obtain consistent and reproducible results, the apparatus and test devices used to carry out the tests shall comply with ISO 4094, wherever applicable.

4.1.3 Sampling, preparation and storage of samples

4.1.3.1 Sampling

The sampling shall be in accordance with Table 1.

In certain cases samples may be taken from the base material before card manufacture if it can be demonstrated that no significant change in the property to be tested can arise during subsequent processing.

The samples used to prepare a set of test pieces shall be taken from the same batch of TFC base material.

4.1.3.2 Preparation

Test samples shall wherever possible be either finished cards or prepared from finished cards. They shall be conditioned in accordance with 4.1.4.

Test pieces shall, as necessary, be prepared from the test samples in the particular form required by the test apparatus used.

4.1.3.3 Storage

Any test samples or test pieces retained for reference shall be stored under the environmental conditions specified in 5.3.2 of ISO/IEC 15457-1 in such a manner that degradation due to moisture, light, physical distortion, plasticisers and other contamination shall not occur.

All such samples shall be clearly cross-referenced to the test report and any relevant supplementary documentation.

4.1.4 Conditioning and testing environment

Unless otherwise specified, the conditioning of test samples, and environment for the tests specified in this standard shall be in accordance with Table 1.

Table 1 — Sampling, conditioning and test environment parameters

Card material	Sampling	Conditioning and testing environment standard	Conditioning and testing environment atmosphere [a]
Paper	ISO 186	ISO 187	23 °C/50 °C ordinary tolerances
Composite	ISO 186	ISO 187	23 °C/50 °C ordinary tolerances
Plastic	ISO 186	ISO 291	normal atmosphere 23 °C/50 °C

[a] "Ordinary tolerances" and "normal atmosphere" are explicit terms taken from the referenced standards.

--`,,```,,,,````-`-`,,`,,`,`,,`---
© ISO/IEC 2008 – All rights reserved
Copyright International Organization for Standardization
Provided by IHS under license with ISO
No reproduction or networking permitted without license from IHS
Not for Resale

4.1.5 Test report

The test report shall be accurate, clear and ensure full traceability.

4.2 Dimensions (except thickness)

4.2.1 Reference

ISO/IEC 15457-1:2001, Clause 5.

ISO/IEC 15457-1:2001, Clause 7.

4.2.2 Principle

The principle is direct linear measurement. The dimensions shall be measured with an accuracy appropriate to the tolerance of the prescribed value of the characteristics of ISO/IEC 15457-1.

4.2.3 Procedure

Measure TFC dimensions using a method and apparatus that ensures a total measurement uncertainty equal to or less than 25 % of the absolute value of the tolerance of the dimension to be checked.

EXAMPLE Value $= d$ mm $\pm$ 0,2 mm; total uncertainty $\leqslant$ 0,05 mm.

During the performance of the measurement, ensure that any mechanical force applied to the edge of the card during measurement does not exceed 6 N per 10 mm length.

NOTE An optical method can be used.

4.3 Thickness

4.3.1 Reference

ISO/IEC 15457-1:2001, Annex A or B, as applicable.

4.3.2 Apparatus

Dead weight micrometer.

4.3.3 Procedure

Determine the thickness of paper or composite TFCs in accordance with ISO 534, using a pressure of 100 kPa, outside the data recording area. Thickness shall be the average measurement of three different measurements taken on the same card in three different locations.

4.4 Separation force

4.4.1 Reference

ISO/IEC 15457-1:2001, 6.3.4.

ISO/IEC 15457-1:2001, 6.1.4.

--`,,```,,,,````-`-`,,`,,`,`,,`---

© ISO/IEC 2008 – All rights reserved

Copyright International Organization for Standardization
Provided by IHS under license with ISO
No reproduction or networking permitted without license from IHS
Not for Resale

4.4.2 Principle

To measure, in the direction of the width of the samples, the force needed to break the bridges of the perforated line between two parts of a card or between two cards.

4.4.3 Apparatus

A tensile tester, including a dynamometer able to apply a force of at least 500 N with a speed of 100 mm/min. Figure 1 shows the arrangement of the test piece in the apparatus.

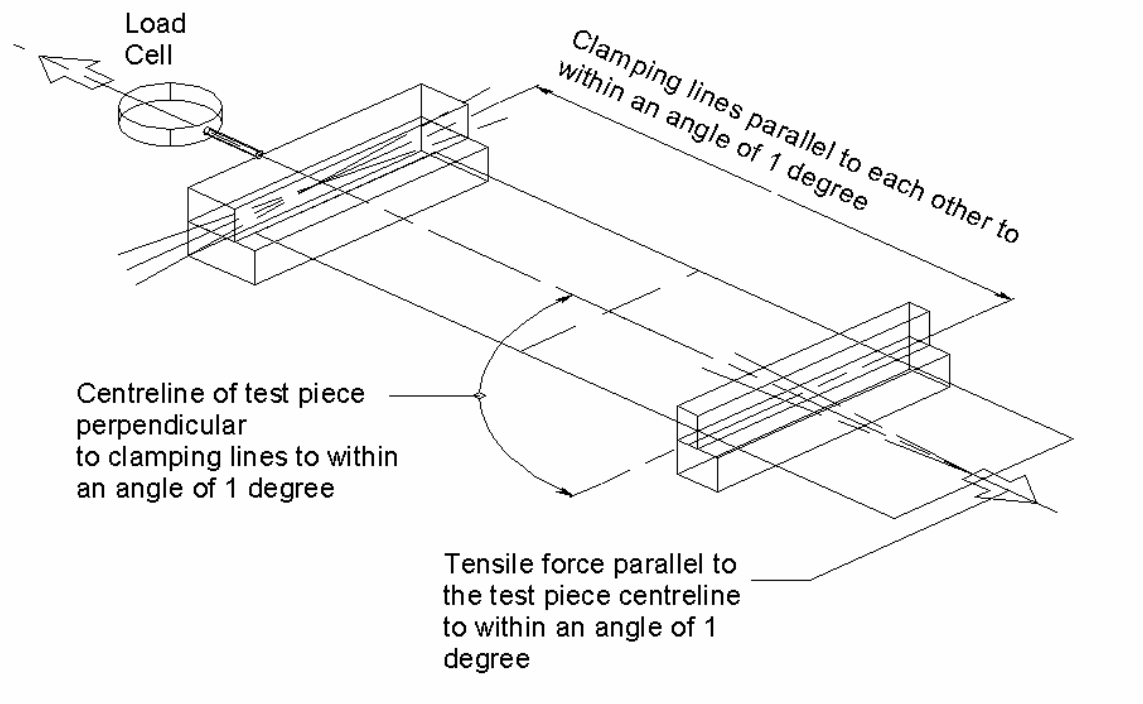

Figure 1 — Test arrangement for separation force

4.4.4 Procedure

Take sufficient samples to prepare ten test pieces which include the perforation line to be tested and prepare the test pieces such that the test is carried out on the full height of the card.

Carefully open out any test pieces which are folded. Keep five test pieces unfolded and fold all the other test pieces 5 times through an angle of 180° (i.e. from the fully open state to the fully closed state).

Measure the separation force for each test piece at a speed of 100 mm/min.

4.4.5 Expression of result

For each test, before or after folding, express the result as the average value of the individual values.

4.5 Reel winding

4.5.1 Reference

ISO/IEC 15457-1:2001, 6.2.

© ISO/IEC 2008 – All rights reserved
Copyright International Organization for Standardization
Provided by IHS under license with ISO
No reproduction or networking permitted without license from IHS
Not for Resale

4.5.2 Apparatus

The apparatus shall have the following characteristics:

— a flat level surface;

— two bars made of a non-ferrous metal with the following dimensions:

  — width: 9 mm ± 1 mm,

  — height: 15 mm ± 0,1 mm,

  — length: 150 mm minimum;

— an appropriate device such as rule, calibrated gauge or micrometer with an accuracy better than 0,2 mm.

4.5.3 Procedure

Place a complete reel of cards (maximum diameter 300 mm) onto two bars as indicated in Figure 2.

Position the bars parallel to each other with the 9 mm face in contact with a flat surface and spaced apart from each other such that the edge of the reel coincides with the outside face of the bar.

For the purpose of this test only, secure the outside end of the reel to the remainder of the reel but ensure that the means employed does not damage the card material when removed. Do not hold the reel together with an elastic band, shrink-wrap or similar means.

NOTE If the reel is too tight this may cause concavity on the stripe or distortion of the material.

After 24 hours, measure the distance (D) between the underside of the reel and the level surface.

The deflection is calculated as (15 – D) mm (see Figure 2).

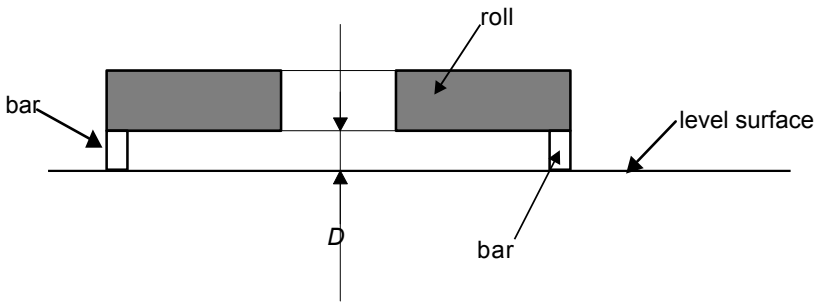

Figure 2 — Tightness of reel winding

4.6 Bursting strength

4.6.1 Reference

ISO/IEC 15457-1:2001, Annex A.

4.6.2 Procedure

Determine the bursting strength of paper TFCs in accordance with ISO 2758.

© ISO/IEC 2008 – All rights reserved

Copyright International Organization for Standardization
Provided by IHS under license with ISO
No reproduction or networking permitted without license from IHS
Not for Resale

4.7 Stiffness

4.7.1 Reference

ISO/IEC 15457-1:2001, Annex A, B or C, as applicable.

4.7.2 Procedure

Cut test pieces from samples that conform to the flatness requirements of the appropriate TFC format.

Determine the bending stiffness, in accordance with ISO 5629 or ISO 2493 as required by the base standard, in the direction of the width of the card.

4.8 Folding endurance

4.8.1 Reference

ISO/IEC 15457-1:2001, Annex A.

4.8.2 Apparatus

Schopper apparatus, or Lhomargy apparatus with a force of 8,68 N.

NOTE When the Lhomargy equipment is used with a force of 8,68 N then, in accordance with ISO 5626, the results are comparable with those obtained using the Schopper equipment.

4.8.3 Procedure

Determine folding endurance in both machine and cross directions, outside the data recording area, in accordance with ISO 5626.

Take the test pieces from the same batch of base material or TFCs.

Express the result as $\mathrm{Log}_{10}(N)$, where N is the number of double foldings.

4.9 Ash content

4.9.1 Reference

ISO/IEC 15457-1:2001, Annex A.

4.9.2 Procedure

Determine the ash content of paper TFC in accordance with ISO 2144. Take the test piece from outside any data recording area and preferably from unprinted areas.

4.10 Smoothness

4.10.1 Reference

ISO/IEC 15457-1:2001, Annex A, B or C, as applicable.

4.10.2 Procedure

Determine smoothness – Bekk method – in accordance with ISO 5627, on both faces, outside the data recording area.

--`,,```,,,,````-`-`,,`,,`,`,,`---
© ISO/IEC 2008 – All rights reserved
Copyright International Organization for Standardization
Provided by IHS under license with ISO
No reproduction or networking permitted without license from IHS
Not for Resale

Where the dimensions of test pieces are required to be greater than the available area outside the data recording area, it is permissible to sample TFC material just before conversion into cards or reels.

An electronic Bekk type smoothness tester may be used if it provides an accuracy equal to or better than those prescribed in ISO 5627.

4.11 Opacity (paper backing) and opacity (700-1 000 nm)

4.11.1 Reference

ISO/IEC 15457-1:2001, Annex A, B or C, as applicable.

4.11.2 Procedure

Determine the opacity (paper backing) in accordance with ISO 2471 and/or opacity (700-1 000 nm) in accordance with ISO/IEC 10373-1. Ensure that the opacity requirements of the base standard are met over the entire area of the card.

NOTE 1 Anomalous results can be obtained from areas having photoluminescent properties such as phosphorescence or fluorescence.

NOTE 2 The opacity (700-1 000 nm) test is required for applications in which the presence of a card is detected by its attenuation of light transmitted between a source and a sensor.

4.12 Coefficient of friction and destacking force

4.12.1 Reference

ISO/IEC 15457-1:2001, Annex A, B or C, as applicable.

4.12.2 Procedure

Determine the dynamic coefficient of friction (substrate/stainless steel), in accordance with ISO 8295, and/or destacking force, in accordance with ISO 1681, in the machine direction using the following parameters, as applicable:

- friction sledge size:
  - for TFC.0 = 25 mm × 25 mm;
  - for TFC.1 = 50 mm × 50 mm;
  - for TFC.5 = 63 mm × 63 mm;
- sample size:
  - for TFC.0 = 30 mm × 200 mm;
  - for TFC.1 = 54 mm × 200 mm;
  - for TFC.5 = 80 mm × 200 mm;

© ISO/IEC 2008 – All rights reserved

Copyright International Organization for Standardization
Provided by IHS under license with ISO
No reproduction or networking permitted without license from IHS
Not for Resale

— total sledge weight:

  — for TFC.0 = 0,308 ± 0,003 N;

  — for TFC.1 = 1,23 ± 0,01 N;

  — for TFC.5 = 1,96 ± 0,02 N;

— feed rate = 100 mm/min ± 10 %;

— sliding path = 100 mm;

— stainless steel characteristic: mirror-bright surface.

The coefficient of friction in the cross direction can only be determined by measurement of samples taken from the base material, immediately prior to conversion.

Where measurements are conducted on unconverted base material, rather than finished cards, the test parameters employed shall be those listed above as applicable to the TFC.5 format.

4.13 Reflectance factor

4.13.1 Reference

ISO/IEC 15457-1:2001, Annex A, B or C, as applicable.

4.13.2 Procedure

Determine the reflectance factors R_p and R_w, on printed marks and on the surrounding substrate area respectively, in accordance with ISO 1831 using the B900 spectral band.

Calculate the print contrast signal (PCS) from:

$$PCS = \frac{R_w - R_p}{R_w}$$

4.14 Air permeance

4.14.1 Reference

ISO/IEC 15457-1:2001, Annex A.

4.14.2 Procedure

Determine the air permeance in accordance with ISO 5636-3, using the Bendtsen method, with a pressure of 1,47 kPa.

4.15 Sizing and pen-writing factor

4.15.1 Reference

ISO/IEC 15457-1:2001, Annex A, B or C, as applicable.

© ISO/IEC 2008 – All rights reserved
Copyright International Organization for Standardization
Provided by IHS under license with ISO
No reproduction or networking permitted without license from IHS
Not for Resale

4.15.2 Principle

This test determines the sizing and pen-writing factor of TFCs in order to establish their compatibility with water based writing inks.

The principle is to draw lines on the TFC substrate surface to be tested using increasingly aggressive coloured reagents.

The most aggressive reagent which is able to produce lines without feathering or excessive penetration defines the sizing and pen-writing factor of the TFC surface.

NOTE This test method is equivalent to the test method specified in NF Q 03-015:1983, *Essais des papiers et cartons — Détermination du degré de collage-écriture*, issued by AFNOR.

4.15.3 Apparatus and reagents

4.15.3.1 Drawing pen

Use a standard commercial drawing pen. Ensure that the nibs are the same length and although fully sharpened, do not cut or otherwise damage the test piece under the test conditions.

4.15.3.2 Drawing system

The drawing pen is mounted in a suitable device, preferably of the carriage type, which makes it possible to move it over the surface to be tested while satisfying the following conditions:

— movement along the plane of symmetry of the drawing pen nibs;

— angle between drawing pen and TFC surface: 45°;

— no additional pressure on the substrate, except that due to the mass of the drawing pen and the mounting device.

4.15.3.3 Reagents

The reagents used are solutions[1)] of the following dyes of Analytical Reagent quality:

— direct dye: colour index CI 74 180 (slightly aggressive dye);

— acid dye: colour index CI 42 045 (very aggressive dye).

The compositions of the solutions to be used are given in Table 2.

Prepare reagents 1 and 5 by dissolving these two dyes in distilled water. This can be done either hot or cold (do not exceed 80 °C).

1) Suitable dye solutions may be obtained from: NOVIPROFIBRE, BP 28, 38320 Eybens, France. This information is given for the convenience of users of this part of ISO/IEC 15457 and does not constitute an endorsement by ISO and IEC. Equivalent products may be used if they can be shown to lead to the same results.

© ISO/IEC 2008 – All rights reserved

Copyright International Organization for Standardization
Provided by IHS under license with ISO
No reproduction or networking permitted without license from IHS
Not for Resale

Table 2 — Composition of solutions

Composition in grams/litre

Reagent number in increasing order of aggressiveness	Composition of solutions	
	CI 74 180	CI 42 045
1	10	0
2	7,5	2,5
3	5	5
4	2,5	7,5
5	0	10

Then proceed as follows:

— to each 1 litre of solution, add 1 gram per litre of phenol, as an antiseptic;

— prepare reagents 2, 3 and 4 using a suitable mixture of reagents 1 and 5.

Keep all reagents in well stoppered flasks in darkness and do not use solutions which are more than three months old.

4.15.4 Preparation of test pieces

Take a set of at least ten test pieces of each specimen, each with sides of at least 70 mm.

Great care shall be taken when sampling the test pieces, as touching with the hands can affect the results.

4.15.5 Procedure

4.15.5.1 Draw the test patterns

Carry out the test in the same atmosphere as that used for conditioning the test pieces.

Set the spacing of the drawing pen nibs to 0,60 mm ± 0,05 mm using a feeler gauge. The height of the reagents in the drawing pen shall be 1 cm at the beginning of drawing. Reset it every three lines.

On each side of each of the test pieces, draw the test pattern shown in Figure 3 with the series of reagents. Take care to allow the first series of parallel lines to dry before drawing the second series.

Avoid superimposing the front and back lines on the same test piece.

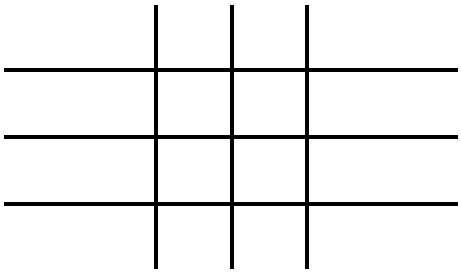

Figure 3 — Test pattern

© ISO/IEC 2008 – All rights reserved
Copyright International Organization for Standardization
Provided by IHS under license with ISO
No reproduction or networking permitted without license from IHS
Not for Resale

The length of the lines shall be approximately 60 mm, and their spacing about 10 mm. The drawing speed shall be near to 20 mm/s.

4.15.5.2 Record observations

For each side of each test piece, observe and report the following in sequence:

— the most aggressive reagent which does not feather;

— the most aggressive reagent which does not penetrate through the test piece.

When the surface bears pre-printed lines (in a security background, for example) do not take account of any feathering located at the crossing of the pre-printed lines with the test pattern rulings.

Penetration through the test piece is deemed to occur when the coloured reagent appears on the back surface, even in very small amounts. Do not confuse penetration with show-through due to lack of opacity. The use of a magnifying glass with a magnification of about 5 facilitates this distinction.

Ignore the ends of the lines.

Of the observations relating to both sides of the same test piece, report those of the lowest number both for feathering and penetration. The two numbers reported in this way constitute the result for one test piece.

In case of doubt regarding the reagent to be reported, note the number of the solution immediately preceding that which gives an indisputable fault.

4.15.5.3 Sizing and pen-writing factor

Proceed as detailed above with the reagents required by the specification.

If a single sizing and pen-writing factor is specified without additional details, it shall be considered to relate to feathering.

Verify that there is no feathering or through penetration of the ink.

4.15.6 Expression of results

For the feathering and through penetration of the ink, calculate separately the mean of all of the results for a set, rounded to one decimal place.

4.16 Tear resistance

4.16.1 Reference

ISO/IEC 15457-1:2001, Annex B or C, as applicable.

4.16.2 Procedure

Determine tear resistance in accordance with ISO 6383-2 — Elmendorf method — outside the data recording area wherever possible, in both machine and cross directions, using the pendulum factor of 16 for the calibration.

Because the test piece dimensions are required to be 63 mm × 75 mm, to carry out the test in both directions it is necessary to sample the base material before converting into cards or reels.

© ISO/IEC 2008 – All rights reserved

Copyright International Organization for Standardization
Provided by IHS under license with ISO
No reproduction or networking permitted without license from IHS
Not for Resale

4.17 Delamination resistance

4.17.1 Reference

ISO/IEC 15457-1:2001, Annex B.

4.17.2 Principle

This test is used to determine the delamination resistance, or cleavage stress, of a material sheet subjected to a tension perpendicular to its plane.

The method is based on the use of an instrument for measuring the bursting strength of paper (Mullen burst tester). An elastic diaphragm, passing through the central hole of an annular disc fixed against the lower clamping surface on which an annular test piece is bonded by adhesive tape, pushes upwards a solid disc, bonded to the other face of the test piece. It is therefore subjected to an increasing cleavage stress until it breaks. The pressure gauge indication is recorded at the breaking point.

NOTE This test method is equivalent to the test method specified in NF Q 03-046:1972, *Determination of the resistance to cleavage perpendicular to the plane of a sheet — Burst tester method* with 1973 amendment, issued by AFNOR. An English language version is available.

4.17.3 Apparatus

4.17.3.1 Punches

Two circular punches with diameter of 33 mm ± 0,1 mm and 50 mm ± 0,1 mm respectively are used for cutting out an annular test piece with an area of 11,08 cm^2.

So as not to start the cleavage at the time of cutting out the test piece, the outside surface of the blade of the 33 mm punch and the inside surface of the 50 mm punch shall be cylindrical.

It is preferable to use two punches that can be assembled so as to perform the cutting in a single operation and obtain a ring of constant width. Preferably use punches that make it possible to release the test piece without it being subjected to torsional forces.

4.17.3.2 Cutting press

Lever press, or pneumatic press, or any equivalent device, which makes it possible to cut out test pieces without damaging the punches. The press shall be such that the punches are perpendicular to the plane of the sheet during the whole of the cutting out operation. Use, for example, a polytetrafluoroethylene plate of approximately 2 cm thickness as a cutting support.

4.17.3.3 Bonding press

Press or pressing device, with pressure indication, which is used for exerting a force of at least 2 000 N and at most 2 400 N (i.e. taking account of the area of the test piece, a pressure of 2 000 kPa ± 200 kPa) over the whole surface of the test piece in order to complete the bonding of the adhesive tape.

4.17.3.4 Bursting strength tester

Instrument for measuring the bursting strength of paper (Mullen burst tester), complying with ISO 2758, with thin diaphragm and pressure gauges suitable for the test to be carried out.

--`,,```,,,,````-`-`,,`,,`,`,,`---
Copyright International Organization for Standardization
Provided by IHS under license with ISO
No reproduction or networking permitted without license from IHS
© ISO/IEC 2008 – All rights reserved
Not for Resale

4.17.3.5 Miscellaneous devices

The following are required:

— a knife or any cutting device for cutting out specimens, samples and adhesive tape;

— a curved needle for dissection;

— an accurate time measuring device;

— appropriate devices for fixing the test piece as shown in Figure 4;

— double sided adhesive tape, covered with an unrippled release layer, supplied in rolls of at least 55 mm width.

The adhesive tape shall provide adequate adhesion to the test piece after simple application of pressure.

4.17.4 Preparation for test

4.17.4.1 Preparation of the test samples

The sample of each specimen shall be cut out to obtain at least 10 square test pieces of 70 mm, or greater.

Apply a strip of adhesive tape to both faces of each of test pieces. The strips of adhesive tape shall be positioned as perfectly as possible opposite each other.

Identify, by marking the tape on each test piece, the front and back of the sheet and the reference for traceability.

4.17.4.2 Preparation of test pieces

Using the punches and one of the presses quoted below, cut out each test piece with a concentricity of $\leqslant$ 0,2 mm from each of the test samples. Proceed so that equal numbers of test pieces are punched starting from each face of the material.

Centre the resulting annular test piece on the solid disc B (see Figure 4) so that the face from which punching started is visible. Then, using the curved needle for dissection, make an incision in the protective release layer of this side at least 3 mm from the edge, avoiding damage to the adhesive tape and the test piece. Remove the release layer at an angle of approximately 180°, slowly and carefully so as not to exert appreciable force on the test piece.

Bond the test piece to the outer ring of disc B after centring it with respect to this part. Remove the remaining release layer, proceeding as before.

Place the outer ring of disc A on the exposed adhesive layer of the test piece.

In order to obtain a good bond between the adhesive tape and the adjoining surfaces subject the assembled discs and test piece to a pressure of 2 000 kPa $\pm$ 200 kPa for 20 s $\pm$ 5 s.

4.17.5 Procedure

Carry out the cleavage test within 2 hours after bonding the adhesive tape to the test piece in order to avoid any change in the properties of the test piece under the effect of the adhesive.

Place the assembly of discs, test piece and adhesive tape in ring C as shown in Figure 4, the flat surface of disc B being turned towards the inside of ring C.

© ISO/IEC 2008 – All rights reserved

Copyright International Organization for Standardization
Provided by IHS under license with ISO
No reproduction or networking permitted without license from IHS
Not for Resale

After noting which side is the top clamping surface, place the assembly on the burst tester, the annular disc A being in contact with the bottom clamping surface.

Centre the assembly using the part D as shown in Figure 4. Lock part C using the top clamping surface.

Switch on the instrument. The diaphragm is distorted, passes through the central hole of part A, pushes part B and finally results in splitting the test piece into two parts.

NOTE It is advisable to monitor the breaking of the test sample and, if necessary, reset after sample failure in order to compensate for the automatic changeover switch.

Record, in kPa to three significant figures, the value of pressure at which the sample fails.

Remove the various parts used for positioning the test piece from the burst tester.

Verify that the adhesive tape has not lifted off, at any point of its periphery, from discs A and B or from the test piece. Lift off the test piece from the two discs.

Ignore any tests for which there is lift-off of the adhesive tape from one of the discs or from the test piece.

Record the location at which failure of the test piece occurred:

— front/inside;

— inside/inside;

— inside/back.

Subject the other test pieces to the test.

Continue testing until ten valid measurements are completed (five for each direction of punching).

4.17.6 Expression of results

Calculate the cleavage stress P from the pressure at the time of breaking as follows:

$$P = 0{,}772 \cdot p$$

where

p = pressure read from the pressure gauge in kPa, to three significant figures;

P = cleavage stress of the test piece in kPa (pressure at time of breaking);

From the pressure reading of the pressure gauge, calculate the arithmetic mean of the valid measurements, expressed in kPa and standard deviation.

NOTE For a uniform paper, in the same laboratory, with the same operator and test apparatus, the coefficient of variation of ten measurements is of the order of 2 %.

4.17.7 Test report

In addition to the results and the reference to this International Standard, quote the following details in the test report:

— date and place of testing;

--`,,```,,,,````-`-`,,`,,`,`,,`---

© ISO/IEC 2008 – All rights reserved
Copyright International Organization for Standardization
Provided by IHS under license with ISO
No reproduction or networking permitted without license from IHS
Not for Resale

— description and identification of the material subject to the tests:

  — the number of test pieces tested,

  — the number of measurements per specimen,

  — the cleavage stress in kPa, with its standard deviation;

— all the characteristics listed in 4.18.5;

— any factors and procedural details which may have had an effect on the results.

4.18 Cold-crack temperature (brittleness)

4.18.1 Reference

ISO/IEC 15457-1:2001, Annex C.

4.18.2 Procedure

Determine the cold-crack temperature (brittleness) of plastic TFCs in accordance with ISO 8570, in both machine and cross directions, outside the data recording area, using the following parameters:

— percussion weight = 1,96 N ± 0,01 N;

— minimum sample conditioning step at a new temperature (stabilisation) = 20 min;

— a set of ten test pieces is used for each step of temperature.

Assess the damage observed in accordance with a percentage value as shown in Figure 5. For each temperature calculate a mean value N (in %) from the individual damage of the test pieces of the set.

--`,,```,,,,````-`-`,,`,,`,`,,`---
© ISO/IEC 2008 – All rights reserved

Copyright International Organization for Standardization
Provided by IHS under license with ISO
No reproduction or networking permitted without license from IHS
Not for Resale

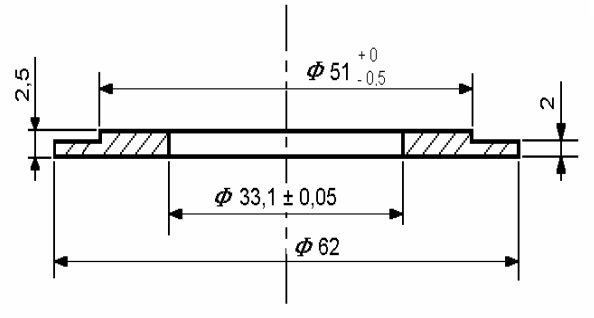

A: annular disc receiving the material — brass

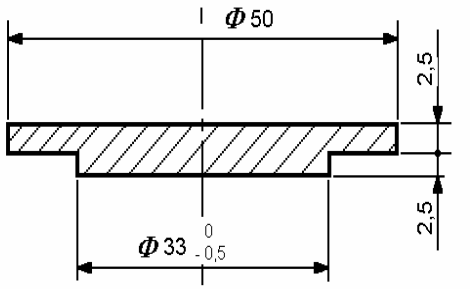

B: solid disc receiving the material — brass

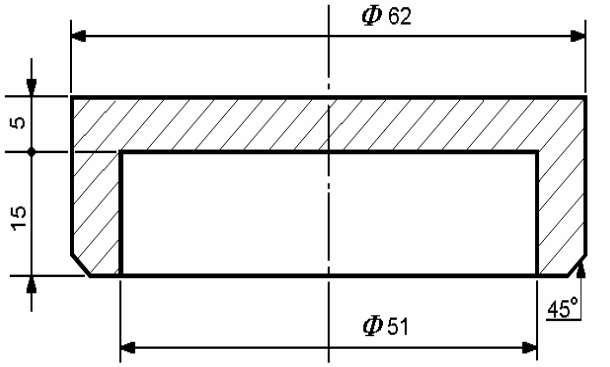

C: centring and pressure ring — brass

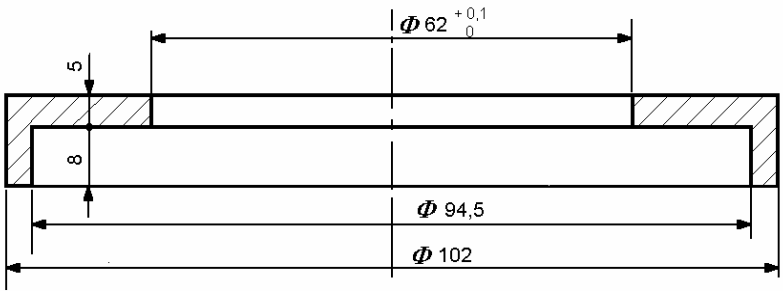

D: ring for centring on the burst tester — mild steel

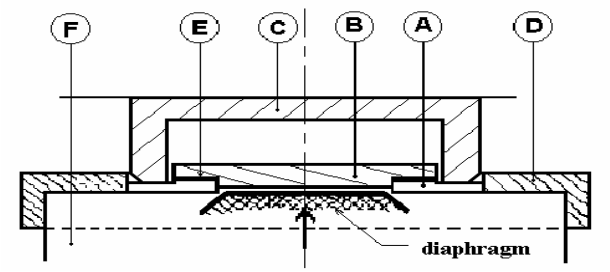

E: material test piece — area ≅ 11,08 cm^2

F: base plate of the burst tester

All dimensions in mm

$R_a \leqslant$ 1,6 mm everywhere

NOTE Dimensions of part D permit this part to be fastened to the burst tester.

Figure 4 — Apparatus for determining the delamination restistance (Burst tester method)

© ISO/IEC 2008 – All rights reserved
Copyright International Organization for Standardization
Provided by IHS under license with ISO
No reproduction or networking permitted without license from IHS
Not for Resale

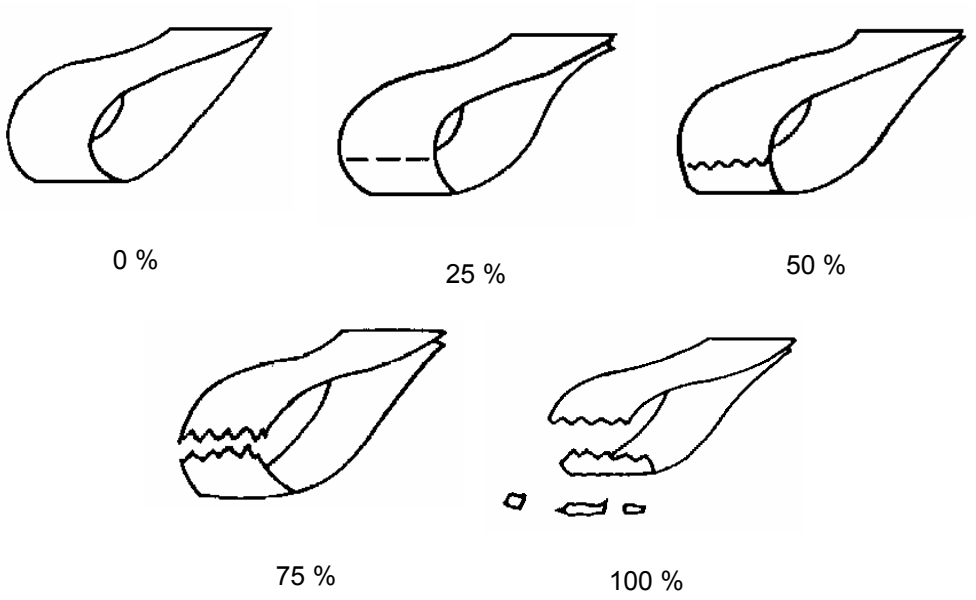

Figure 5 — Assessment of damage

4.18.3 Expression of results

The evaluated test results N (in %) are represented graphically and a linear regression line is calculated. The intersection of the regression line and the line $N = 50$ % determines the conventional cold-crack temperature, in accordance with Figure 6.

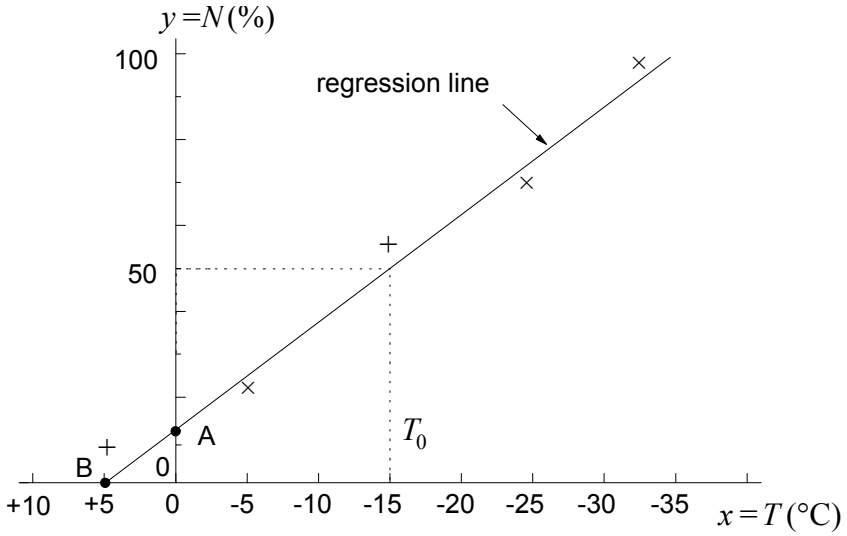

NOTE The drawing of the regression line shows that A ≡ (0;12) and B ≡ (5;0) so its equation is $y = -2{,}5\,x + 12$ and, for 50 % of damage, $T_0 \approx -15$ °C.

Figure 6 — Example of evaluation of cold-crack temperature T_0

© ISO/IEC 2008 – All rights reserved

Copyright International Organization for Standardization
Provided by IHS under license with ISO
No reproduction or networking permitted without license from IHS
Not for Resale

5 Test methods for magnetic stripe physical characteristics

5.1 Preparation and storage of samples

Unless other wise stated in the individual test methods, the requirements for preparation and storage of samples for testing magnetic stripe physical characteristics shall be as given in 4.1.3.

5.2 Conditioning and test environments

Unless other wise stated in the individual test methods, conditioning and testing environments for magnetic stripe physical characteristics shall be as shown in Table 1, in accordance with the card material.

5.3 Protrusion

5.3.1 Reference

ISO/IEC 15457-2:2007, 5.1.1.

5.3.2 Principle

Protrusion is the effective increase in card thickness in the area covered by the magnetic stripe above that of the adjacent card surface.

5.3.3 Apparatus

A mechanical or electronic micrometer fitted with a flat probe of 10 mm $\pm$ 1 mm diameter and an anvil of diameter equal to or greater than that of the probe.

The force applied by the probe shall be equal to or less than 1 N, applied perpendicular to the plane of the card.

The resolution and the accuracy shall be equal to or better than 1 µm.

5.3.4 Procedure

Determine the average card thickness by measurements, at 10 mm intervals adjacent to the edge of the stripe.

Determine the average thickness of the card plus stripe by measurement at 3 points along the centre of the stripe.

Calculate the protrusion as the difference between the average of the thickness measurements with and without the stripe.

5.4 Profile deviation

5.4.1 Reference

ISO/IEC 15457-2:2007, 5.1.2.

Restriction: not applicable to stripes with a height of 1,6 mm.

--`,,```,,,,````-`-`,,`,,`,`,,`---
Copyright International Organization for Standardization
Provided by IHS under license with ISO
No reproduction or networking permitted without license from IHS
Not for Resale
© ISO/IEC 2008 – All rights reserved

5.4.2 Principle

The profile deviation is evaluated from the surface profile line plotted across the height of the magnetic stripe. It is the maximum normal distance that can be measured, in either direction, from the base line L1 to the profile line of the magnetic material. The base line L1 is constructed in accordance with Figure 6 and the following description:

— points A and B, the transition points between the magnetic stripe surface and the adjacent substrate surface, are found on the profile line by inspection;

— transition lines are drawn through A and B, perpendicular to the direction of motion of the probe;

— an auxiliary line is constructed parallel to each transition line, spaced 1 mm from it in the direction of the nearest end of the profile line;

— points C and D are found at the intersection of the auxiliary lines with the profile line;

— line L1 is the line drawn between points C and D.

5.4.3 Procedure

Determine the profile deviation using a contact profilometer in accordance with the measuring instrument of ISO 3274 and procedure described in 5.2 of ISO/IEC 10373-2, using the following appropriate instrument parameters:

— filter:

  — either electronic filter with cut-off wavelength = 0,8 mm

  — or mechanical filter, i.e. probe tip radius = 1 mm;

— applied force $\leqslant$ 1 mN;

— total uncertainty of measurement $\leqslant$ 5 %.

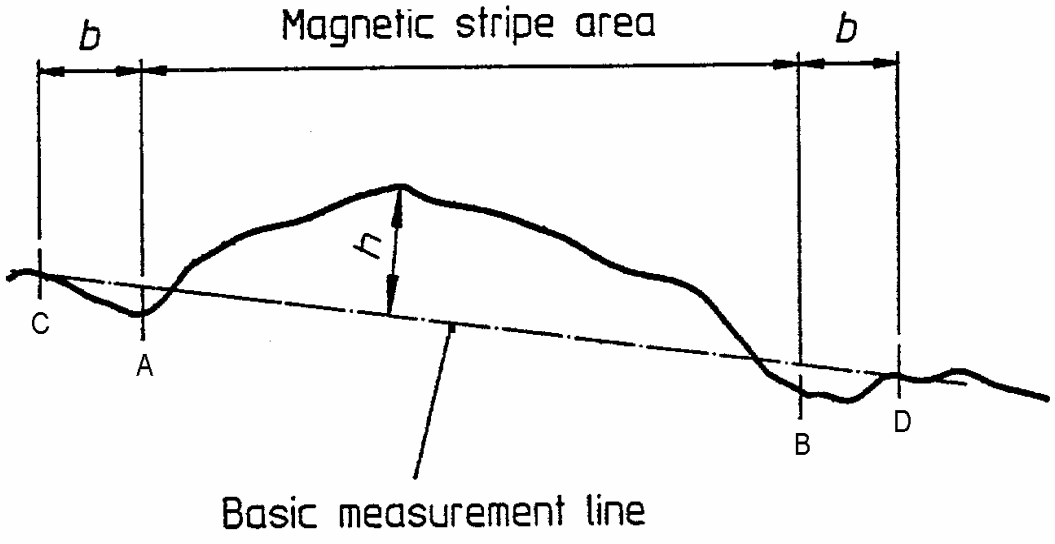

b = 1 mm

NOTE The maximum profile deviation (h) can be above or below the basic measurement line.

Figure 7 — Construction for the measurement of profile deviation

© ISO/IEC 2008 All rights reserved

Copyright International Organization for Standardization
Provided by IHS under license with ISO
No reproduction or networking permitted without license from IHS
Not for Resale

5.5 Roughness R_a and R_z

5.5.1 Reference

ISO/IEC 15457-2:2007, 5.1.3.

5.5.2 Principle

In accordance with ISO 4287-1.

5.5.3 Procedure

Determine the R_a and R_z roughness in accordance with 5.3 of ISO/IEC 10373-2, using a contact profile meter as prescribed in ISO 3274 and the following measuring instrument parameters:

— cut-off wavelength of 0,8 mm;

— stylus radius $\leqslant$ 5 µm;

— vertical force $\leqslant$ 1 mN;

— total uncertainty of measurement $\leqslant$ 5 %.

5.6 Warpage

5.6.1 Reference

ISO/IEC 15457-2:2007, 5.1.4.

5.6.2 Procedure

Determine warpage in accordance with the instrument and the procedure of 5.1 of ISO/IEC 10373-2.

For TFC0 format an adaptation of the apparatus is necessary.

5.7 Adherence

5.7.1 Reference

ISO/IEC 15457-2:2007, 5.2.

5.7.2 Apparatus

The apparatus shall have the following characteristics:

— adhesive tape as specified in ISO 2409 with an adhesive strength of 0,4 mN/m $\pm$ 0,04 mN/m, tested in accordance with IEC 60454-2;

— a card holder comprising a rigid metal plate with an aperture 25 mm $\times$ 50 mm.

5.7.3 Procedure

With the card on a flat surface, place the card holder over it. Apply the adhesive tape firmly to the magnetic stripe within the card holder aperture, over a length of 40 mm and press with a finger tip.

© ISO/IEC 2008 – All rights reserved
Copyright International Organization for Standardization
Provided by IHS under license with ISO
No reproduction or networking permitted without license from IHS
Not for Resale

Ensure the card holder is held firmly to avoid any movement of the card during peeling. Peel the tape back at an angle of 45° and an approximate speed of 100 mm/s.

Inspect to ensure that the requirements given in ISO/IEC 15457-2 are met.

The test shall be carried out in both cross and widthwise direction.

5.8 Wear test

5.8.1 Reference

ISO/IEC 15457-1:2001, 4.6.

ISO/IEC 15457-2:2007, 5.3.

5.8.2 Principle

The principle is based on the ability of a card to withstand the degree of wear appropriate to its usage class. It is defined in terms of the extent to which abrading the magnetic stripe degrades the average read back signal level.

5.8.3 Procedure

Perform the wear test in accordance with the procedure and the apparatus of 5.4 of ISO/IEC 10373-2:1998.

The result of the measurement is the signal amplitude U_{A1}, read before any wear occurs and after:

— 50 cycles for light usage;

— 500 cycles for medium usage;

— 2 500 cycles for heavy usage.

5.9 Dimensional measurement of the magnetic stripe

5.9.1 Principle

The principle is based on a direct linear measurement. The dimensions shall be measured with an accuracy appropriate to the tolerance defined in ISO/IEC 15457-2.

5.9.2 Procedure

Measure each dimension with an measuring instrument giving a total uncertainty of measurement (accuracy + error of measurement + random error + calibration error) equal to or less than ¼ of the absolute value of the tolerance of the quantity to be checked.

An optical method shall be used.

6 Test methods for static magnetic characteristics

6.1 Principle

The magnetic characteristics required for ISO/IEC 15457-2 shall be derived from the static saturation hysteresis curve $M = \mathrm{f}(H)$ or $J = \mathrm{f}(H)$ of a sample of the magnetic stripe and from the derivative of that curve.

© ISO/IEC 2008 – All rights reserved

Copyright International Organization for Standardization
Provided by IHS under license with ISO
No reproduction or networking permitted without license from IHS
Not for Resale

NOTE Because none of the quantities to be measured requires absolute magnetisation values, the scaling of this axis can be adjusted to achieve the best resolution. If preferred, to accommodate established practice, the vertical scale may be expressed in terms of a thickness-magnetisation product ($t.M$ or $t.J$) or as magnetisation flux per unit of magnetic sample height (Φ/h).

However, in the specification of the test method which follows, this axis will be referred to only as the magnetisation (M) axis and the curves to be plotted as

$M = \mathrm{f}(H)$ and $\mathrm{d}M/\mathrm{d}H = \mathrm{g}(H)$

6.2 Apparatus

The measuring instrument used to obtain the hysteresis curve $M = \mathrm{f}(H)$ shall be able to produce applied fields up to the value of H_{max} appropriate to the class of material (see Table 3). Examples of suitable equipment are:

— a magnetometer such as a vibrating sample magnetometer (VSM);

— a hysteresismeter (HM).

The accuracy of measurement and presentation of values from which the hysteresis curve is formed shall be such that:

— the absolute accuracy of magnetic field (H) axis values is better than 1 % for magnetic fields up to 120 kA/m; better than 2 % for magnetic fields up to 1 200 kA/m;

— the linearity of magnetisation (M) axis values is better than 1 %.

The instrument itself, or some auxiliary process shall be able to differentiate the hysteresis curves obtained, to produce the curve $\mathrm{d}M/\mathrm{d}H = \mathrm{g}(H)$.

The accuracy of measurement, calculation and presentation of values from which the differentiated hysteresis curve is formed shall be such that:

— the absolute accuracy of magnetic field (H) axis values is better than 1 % for magnetic fields up to 120 kA/m; better than 2 % for magnetic fields up to 1 200 kA/m;

— the linearity of differentiated magnetisation ($\mathrm{d}M/\mathrm{d}H$) axis values is better than 5 %.

NOTE 1 The use of a differentiation process introduces a vulnerability to minor high frequency disturbances. Care should therefore be taken to ensure that such factors do not degrade the accuracy of the measurement. Sources of alternative excitation current should be given particular attention.

NOTE 2 To facilitate the calculation it is possible to normalize the differentiated curve such that $\mathrm{g}_{\mathrm{max}}(H) = 1$.

The capability of measurement accuracy shall be: $H_{\mathrm{c}M} \pm 2$ %, $SF_{\mathrm{D}} \pm 4$ %, $SF_{\mathrm{S}} \pm 4$ %, $SQ \pm 2$ %.

6.3 Preparation and storage of sample

Unless otherwise stated in the individual test methods, the following requirements for preparation and storage of samples for testing static magnetic characteristics shall be taken as supplementary to those given in 4.1.3.

6.3.1 Preparation

The test samples shall be in the form of one or several rectangular stripes of material taken from the TFC stripe, cut such that the direction of magnetic field application is parallel to the stripe length dimension.

The test sample dimension parallel to the direction of magnetic field application shall be much greater than its thickness.

© ISO/IEC 2008 – All rights reserved
Copyright International Organization for Standardization
Provided by IHS under license with ISO
No reproduction or networking permitted without license from IHS
Not for Resale

When several stripes are needed for sensitivity reasons, all stripes shall have the same dimensions and shall be stacked together to form the test sample.

The tests samples shall be acclimatised to the test room for at least 24 hours immediately prior to the tests.

NOTE In ISO/IEC 15457, the stripe length dimension is parallel to the longest edge of the card.

6.3.2 Storage

Storage conditions for samples for testing static magnetic characteristics shall be as given in 4.1.3.3.

6.3.3 Conditioning and testing environment

The tests may be carried out under any normal office or laboratory environment:

— 18 °C to 26 °C;

— 30 % r.h. to 70 % r.h.

NOTE The temperature of the sample during the test will affect the measured value of H_{cM}.

6.4 Procedure

Measurement procedure will be different according to the apparatus.

6.4.1 VSM

Affix the sample to the VSM probe such that the sample does not move relative to the probe during measurement.

Orient the sample on the probe such that the stripe length dimension is parallel to the field direction within ± 2° (see Figure 8).

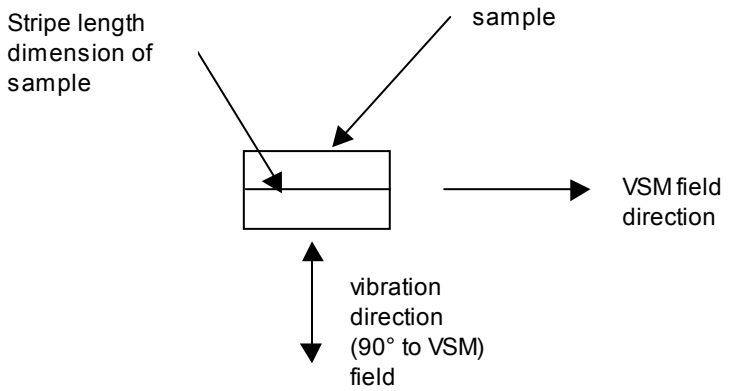

Figure 8 — Sample orientation for VSM hysteresis measurements

Measure the magnetic moment M of the sample over the range $\pm H_{max}$, either by sweeping the field H at a frequency such that a slower frequency gives the same result (within ± 0,5 %), or by using digital setpoints for field levels.

— from – H_{max} to zero,

— from zero to + H_{max},

© ISO/IEC 2008 – All rights reserved

Copyright International Organization for Standardization
Provided by IHS under license with ISO
No reproduction or networking permitted without license from IHS
Not for Resale

— from + H_{max} to zero,

— from zero to – H_{max},

— from – H_{max} to zero.

Plot the hysteresis loop and the differentiated curve using data taken every 40 kA/m (500 Oe) maximum, and every 4 kA/m (50 Oe) maximum in the area of H_{cM}. See Figure 9.

6.4.2 HM

Select the “dual measurement” procedure.

Adjust the value of the maximum applied field.

Insert the test sample in the measurement cell by using the adequate sample holder.

Start the measurement: a first run is performed; then the software asks to remove the sample; start the second measurement run.

Then the hysteresis loop and the differentiated curve are displayed, along with the values of the following parameters: H_m, M_{max}, H_{cM}, M_r, SF_D and SQ.

H_{cM}, SF_D and SQ are calculated as stated below.

6.5 Expression of results

All measurements shall be made from hysteresis curves for which the maximum magnetic field excursions are $\pm H_{max}$. The value of $|H_{max}|$ is defined for each magnetic class in Table 3.

Table 3 — Values of maximum applied magnetic field

Magnetic class	**Values of $|H_{max}|$** kA/m
S	120
L	120
H	1 200

The results for each of the required quantities shall be derived from the hysteresis curves and differentiated hysteresis curves, as shown in Figure 9. The method of derivation for each is given hereafter in 6.6 to 6.8.

© ISO/IEC 2008 – All rights reserved
Copyright International Organization for Standardization
Provided by IHS under license with ISO
No reproduction or networking permitted without license from IHS
Not for Resale

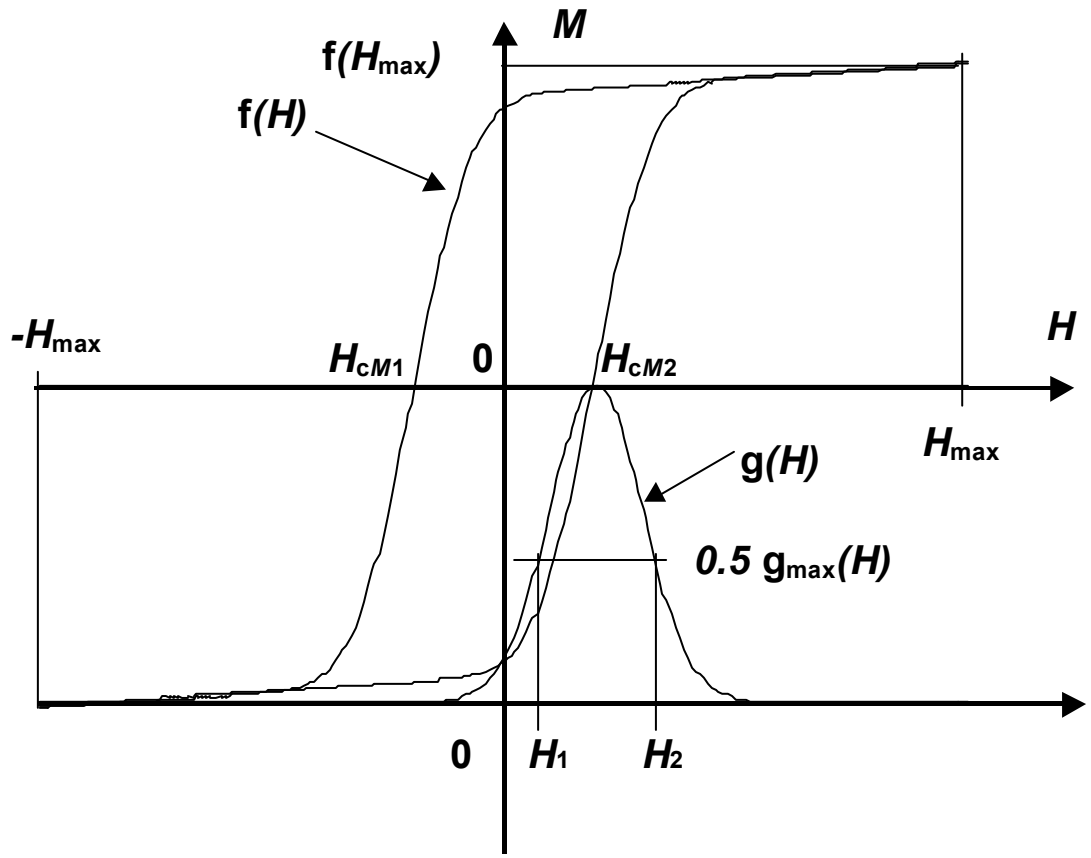

Figure 9 — Example of hysteresis loop and its differentiated curve

6.6 Coercivity, H_{cM}

6.6.1 Reference

ISO/IEC 15457-2:2007, Annex A.

6.6.2 Procedure

Determine coercivity values on the positive and negative H-axis from the hysteresis curve as the value of the applied magnetic field which reduces the magnetisation to zero i.e. f (H_{cM}) = 0. See Figure 9.

Then find the average value:

$$H_{cM} = \frac{|H_{cM.1}| + |H_{cM.2}|}{2}$$

NOTE 1 Oe = $10^3/4\pi$ A/m ≈ 79,58 A/m; 1 kA/m = 4π Oe ≈ 12,57 Oe.

6.7 Squareness, SQ

6.7.1 Reference

ISO/IEC 15457-2:2007, Annex A.

© ISO/IEC 2008 – All rights reserved

Copyright International Organization for Standardization
Provided by IHS under license with ISO
No reproduction or networking permitted without license from IHS
Not for Resale

6.7.2 Procedure

Determine the squareness from the hysteresis curve as the ratio of the value of magnetisation at zero magnetic field to the value of magnetisation at the appropriate maximum applied field H_{max}, i.e.:

$$SQ = \frac{f(0)}{f(H_{max})}$$

NOTE Particularly for class H material, the magnetisation value depends strongly on the value of the maximum applied field. The accuracy of squareness measurements is therefore dependent on the ability to set the maximum applied field to a reproducible value.

6.8 Switching field distribution, (SF_D)

6.8.1 Reference

ISO/IEC 15457-2:2007, Annex A.

6.8.2 Procedure

Determine the switching field distribution from the differentiated hysteresis curve as the width of the $dM/dH = g(H)$ curve at the half-amplitude points divided by the value of the magnetic field midway between the two half-amplitude points, i.e.:

$$SF_D = 2 \times \left| \frac{H_1 - H_2}{H_1 + H_2} \right|$$

where $g(H_1) = g(H_2) = 0{,}5\ g_{max}(H)$

NOTE The measurement of SF_D, since it uses a derivative relation, is particularly vulnerable to errors arising from small changes on the $M = f(H)$ curve. Such small changes, which do not affect the coercivity or squareness, can be due for example to parasitic signals coming with the mains. Therefore precautions should be taken to assure a pure sinusoidal wave, or a clean power source used to produce the applied field.

6.9 Test report

The test report shall ensure full traceability of the origin of the samples and the conditions and circumstances of tests. It shall bear across-reference to locate the actual samples preserved in accordance with 6.3.2.

The technical content of the report shall comprise reproductions of the hysteresis and differentiated hysteresis curves obtained, together with tabulated results showing the actual values derived for each of the required quantities. Multiple measurements of the same quantity taken from the same sample shall be shown as individual measurements together with mean and standard deviation.

The accuracy of each individual measurement shall be stated and the claimed accuracy supported by reference to an explicit analysis, which may be a separate document or may be supplied as an annex to the test report.

7 Test method for dynamic magnetic characteristics

7.1 Principle

The principle of the test is based on the measurement of read back signal voltages recorded under certain specified conditions. The test has two independent variables, write current and recording density.

© ISO/IEC 2008 – All rights reserved
Copyright International Organization for Standardization
Provided by IHS under license with ISO
No reproduction or networking permitted without license from IHS
Not for Resale

Calibration of recording density is achieved through accurate equipment frequency sources and precise control of the relative motion between the test sample and the magnetic heads.

Calibration of write current and read back signal voltage is achieved by reference to standard reference cards. In particular, readily identifiable points on the saturation curve of a reference card provide voltage and current values upon which subsequent measurements and test conditions are standardized.

The method is an adaptation of that given in ISO/IEC 7811-2, ISO/IEC 7811-6 and ISO/IEC 10373-2:1998, which are the magnetic stripe standards and test methods for identification cards used in international interchange applications.

7.2 Reference cards

Standard reference cards[2)] shall be used to calibrate read voltage and write current scales in the test equipment and to establish operating points in compatible system equipment (see 6.2.2 of ISO/IEC 15457-2).

Calibration may be accomplished through the use of intermediate secondary or tertiary reference media, properly certified as to their correspondence to the primary standard. A single reference card shall be used to calibrate both read voltage and write current scales for each class of magnetics, as shown in Table 4.

Table 4 — Reference cards for each magnetic class

Magnetics class	Reference card
S and L	RM 7811-2
H	RM 7811-6

7.3 Apparatus

7.3.1 Measuring instrument for classes L and S

The measuring instrument shall conform to the requirements of 5.5 of ISO/IEC 10373-2.

7.3.2 Measuring instrument for class H

The measuring instrument shall conform to the requirements of Annex B of ISO/IEC 7811-6.

7.4 Preparation and preservation of test samples

Unless otherwise stated in the individual test methods, the following requirements for preparation and storage of samples for testing dynamic magnetic characteristics shall be taken as supplementary to those given in 5.1.

7.4.1 Preparation

Samples shall be clean new cards, conforming to the appropriate physical characteristics specified in ISO/IEC 15457-1.

The tests samples shall be acclimatised to the test room for at least 24 hours immediately prior to the tests.

7.4.2 Preservation

Storage conditions for samples for testing dynamic magnetic characteristics shall be as given in 5.1.

2) Reference cards in ID-1 format may be purchased, as long as supplies are available, from: Physikalisch-Technische Bundesanstalt, Lab 1.41 Bundesallee 100, D-38116 Braunschweig, Germany.

© ISO/IEC 2008 – All rights reserved

Copyright International Organization for Standardization
Provided by IHS under license with ISO
No reproduction or networking permitted without license from IHS
Not for Resale

7.4.3 Conditioning and testing environment

The tests may be carried out under any normal office or laboratory environment:

— temperature range: 18 °C to 26 °C;

— humidity range: 30 % r.h. to 70 % r.h.

7.5 Test procedure

Using the procedure given in ISO/IEC 10373-2, measure each of the U_A and U_i quantities specified in Table A.2 of ISO/IEC 15457-2 under the test conditions given in 7.4.3 and with the appropriate test parameter values selected.

7.5.1 Test densities (D_{max} and D_{min})

For TFC.1 and TFC.5, use the two test recording densities given in the test procedure.

NOTE The procedure does not use these quantity symbols but gives the values 8 ft/mm ($= D_{min}$) and 20 ft/mm ($= D_{max}$) explicitly.

For TFC.0, test at lower densities, substituting the values $D_{min} = 3$ ft/mm and $D_{max} = 8$ ft/mm in the appropriate places in the procedure.

7.6 Expression of results

Each of the U_A and U_i quantities specified in Table A.2 of ISO/IEC 15457-2 shall be expressed explicitly, as shown in the table, without further calculation or manipulation.

The following derived information may, if desired, be provided as an aid to interpretation of the results.

NOTE Care should be exercised when interpreting the U_A and U_i quantities. They comprise a minimum set whose combined effect, through physical, rather than mathematical, dependencies is greater than the sum of the individual effects.

7.6.1 Resolution

Resolution is a secondary characteristic whose value may be derived from the measured values, if required. It is given by the following formula:

$$\text{Resolution} = \frac{U_{A3}}{U_{A2}}$$

NOTE U_{A3} is measured at D_{max}; U_{A2} is measured at D_{min}.

7.6.2 Modulation

Modulation is a secondary characteristic whose value may be derived from the measured values, if required. It is given by the following formula:

$$\text{Modulation} = \frac{U_{i\,max} - U_{i\,min}}{2 \times U_A}$$

--`,,```,,,,````-`-`,,`,,`,`,,`---

© ISO/IEC 2008 – All rights reserved
Copyright International Organization for Standardization
Provided by IHS under license with ISO
No reproduction or networking permitted without license from IHS
Not for Resale

7.7 Test report

The test report shall ensure full traceability of the origin of the samples and the conditions and circumstances of tests. It shall bear a cross-reference to locate the retained samples.

The technical content of the report shall comprise reproductions of the sample saturation curves obtained, together with tabulated results showing the actual values derived for each of the required quantities. Multiple measurements of the same quantity taken from the same sample shall be shown as individual measurements together with mean and standard deviation.

The accuracy of each individual measurement shall be stated and the claimed accuracy supported by reference to an explicit analysis, which may be a separate document or may be supplied as an annex to the test report.

8 Tests for cards containing contactless chips and antennas

8.1 Reliability of the chip/antenna connection for a strip of connected cards

8.1.1 Reference

ISO/IEC 15457-1:2001, Clause 5.

8.1.2 Principle

The purpose of this test is to check the reliability of the connection between the chip and the antenna for the case where the cards to be tested are supplied in the form of a connected strip (e.g. cards from a roll or fan-fold pack).

The test is based on bending in one direction and then in the opposite direction along the length of the card.

8.1.3 Equipment

The test equipment employed shall conform to the principle shown in Figure 10 and shall have the following characteristics:

— The driving mechanism of the strip of cards shall not interfere with the area where the chip is located;

— Cylinder radius : 40 mm;

— Surface cylinder hardness :Polyoxymethylene (POM) material;

— Number for back and forth cycles: 50;

— Speed: 300 +/- 200 mm/s;

— The device shall be designed to make the card conform to the roller curvature without any damage to the card.

--`,,```,,,,````-`-`,,`,,`,`,,`---

© ISO/IEC 2008 – All rights reserved

Copyright International Organization for Standardization
Provided by IHS under license with ISO
No reproduction or networking permitted without license from IHS
Not for Resale

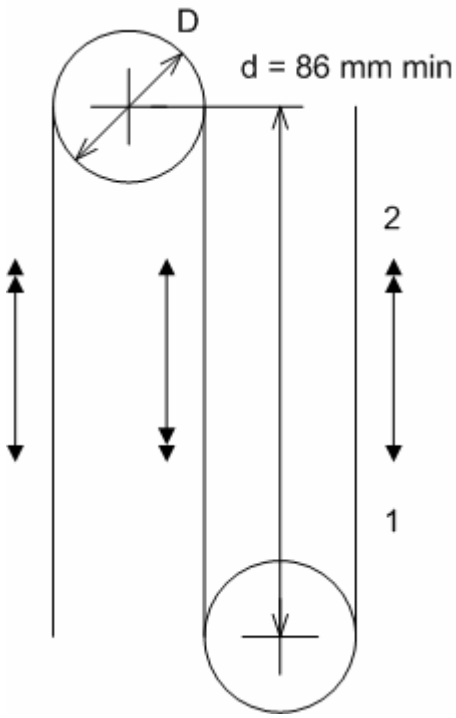

Figure 10 — Principle of chip/antenna connection reliability test for a strip of connected cards

8.1.4 Procedure

Select a sample strip containing at least 10 cards.

Measure the reading distance of each card with a contactless reader.

Subject the strip of cards to 50 cycles of test equipment operation.

Check that all the cards can be read on the same contactless reader as was used for the initial reading distance measurement and that the variation of the maximum reading distance value does not exceed 10 %.

8.1.5 Test report

Record the pass/fail outcome of the test.

If the outcome is a failure then record the reasons for failure and the proportion of cards affected.

8.2 Reliability of the chip/antenna connection for a single card

8.2.1 Reference

ISO/IEC 15457-1:2001, Clause 5.

8.2.2 Principle

The purpose of this test is to check the reliability of the connection between chip and antenna for the case where the cards to be tested are supplied in single (individualised) form. The test is based on bending in one direction and in the opposite one along the length of the card.

© ISO/IEC 2008 – All rights reserved
Copyright International Organization for Standardization
Provided by IHS under license with ISO
No reproduction or networking permitted without license from IHS
Not for Resale

8.2.3 Equipment

The equipment employed shall conform to the principle shown in Figure 11 and shall have the following characteristics:

— The driving mechanism of card shall not interfere with the area where the chip is located

— Cylinder radius : 40 mm;

— Surface cylinder hardness: Polyoxymethylene (POM) material;

— Number of back and forth cycles: 50;

— Speed: 300 +/– 200 mm/s;

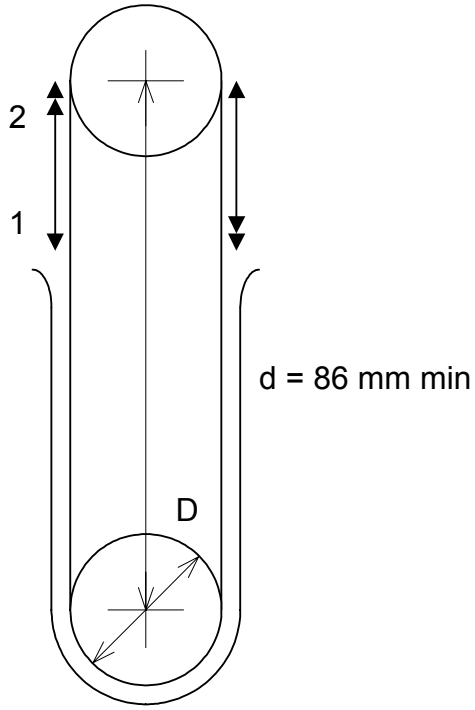

Figure 11 — Principle of chip/antenna connection reliability test for single tickets

8.2.4 Procedure

Select a sample batch of at least 10 cards.

Measure the reading distance of each card with a contactless reader.

Subject each card in turn to 50 cycles of test equipment operation.

Check that all the cards can be read on the same contactless reader as was used for the initial reading distance measurement and that the variation of the maximum reading distance value does not exceed 10 %.

8.2.5 Test report

Record the pass/fail outcome of the test.

If the outcome is a failure then record the reasons for failure and the proportion of cards affected.

© ISO/IEC 2008 – All rights reserved

Copyright International Organization for Standardization
Provided by IHS under license with ISO
No reproduction or networking permitted without license from IHS
Not for Resale

8.3 Test for chip/antenna connection withstanding scratch test

8.3.1 Reference

ISO/IEC 15457-1:2001, Clause 5.

8.3.2 Principle

The purpose of this test is to check the reliability of the connection between the chip and antenna when a scratch occurs. The test is made along the length of the tickets on its front and back sides.

8.3.3 Equipment

The equipment employed shall conform to the principle shown in Figure 12 and shall have the following characteristics:

— The driving mechanism of stripe shall not interfere with the area where the chip is located;

— Cylinder radius: 14 mm;

— Surface cylinder hardness: inox material;

— Final cylinder diameter: 19 mm ± 0,05 mm;

— Final cylinder hardness: Silicone 50 Shore;

— Tool shape:

  — Blade 10 × 60 mm;

  — Profile for thickness: 2,5 mm radius;

  — Steel made;

— Pressure force: 7,5 to 0,5 daN;

— Distance: 0,2 mm ± 0,05 mm

— Number for back and forth cycles: 50 on each side;

— Speed: 100 to 200 mm/s on circumference;

© ISO/IEC 2008 – All rights reserved
Copyright International Organization for Standardization
Provided by IHS under license with ISO
No reproduction or networking permitted without license from IHS
Not for Resale

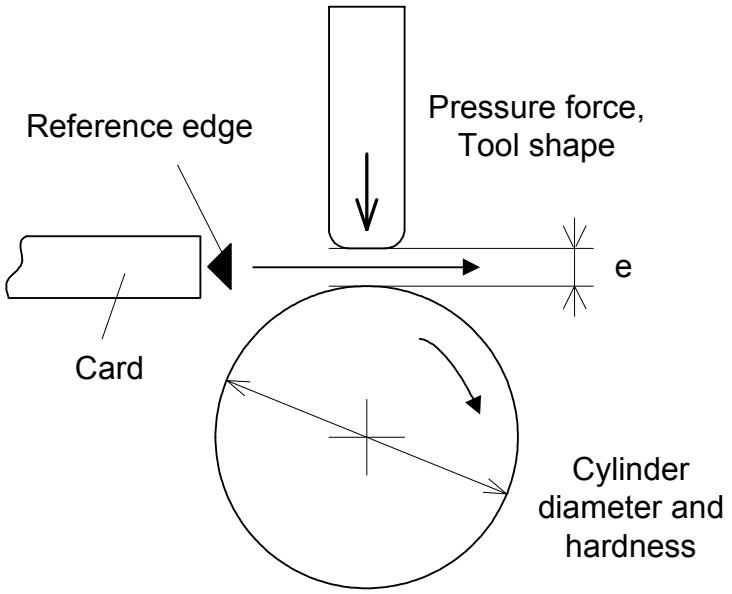

Figure 12 — Principle of chip/antenna connection scratch test

8.3.4 Procedure

The test shall be performed at the default test temperature (see 4.1.4).

Select a strip or sample batch of single cards containing at least 10 cards.

Measure the reading distance of each card with a contactless reader.

Subject the strip (or each single card in turn) to 25 cycles of test equipment operation on each face.

Check that all cards can be read on the same contactless reader as was used for the initial reading distance measurement and that the variation of the maximum reading distance value does not exceed 10 %.

8.3.5 Test report

Record the pass/fail outcome of the test.

If the outcome is a failure then record the reasons for failure and the proportion of cards affected.

8.4 Test for card withstanding to Crumpling / Folding

8.4.1 Reference

ISO/IEC 15457-1:2001, Clause 5.

8.4.2 Principle

This test checks the reliability of the card when it is submitted to folding/crumpling.

8.4.3 Procedure

Select a sample batch of at least 10 cards.

Measure the reading distance of each card with a contactless reader.

--`,,```,,,,````-`-`,,`,,`,`,,`---

© ISO/IEC 2008 – All rights reserved

Copyright International Organization for Standardization
Provided by IHS under license with ISO
No reproduction or networking permitted without license from IHS
Not for Resale

Perform the following steps:

Step 1: Fold the card in its middle with regards to its larger side (card front side inside), as shown in Figure 13.

Step 2: Fold the same card in its middle with regards to its larger side (card back side inside), as shown in Figure 13.

Repeat these steps 9 more times on each card (to a total of 10 folds).

NOTE More than 10 folds may be specified by the application.

Check that all the cards can be read on the same contactless reader as was used for the initial reading distance measurement and that the variation of the maximum reading distance value does not exceed 10 %.

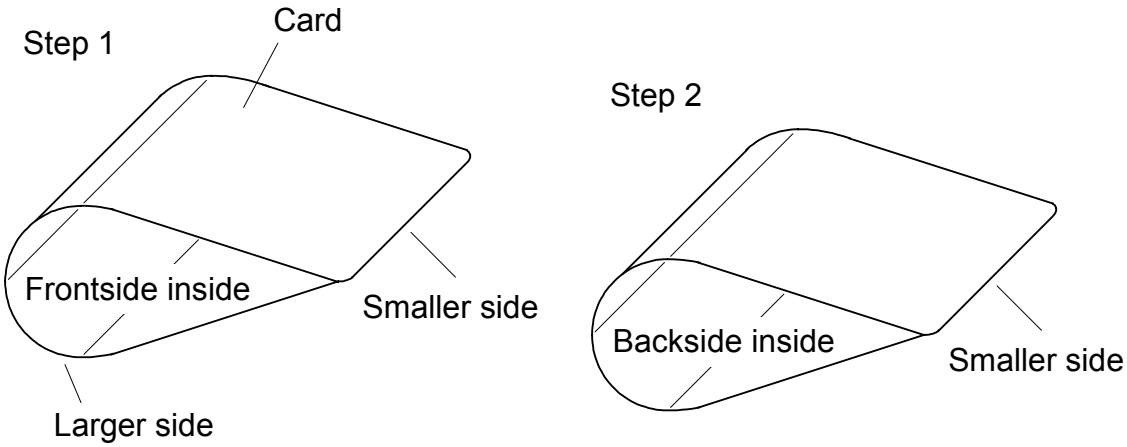

Figure 13 — Principle of folding test

8.4.4 Test report

Record the pass/fail outcome of the test.

If the outcome is a failure then record the reasons for failure and the proportion of cards affected.

© ISO/IEC 2008 – All rights reserved
Copyright International Organization for Standardization
Provided by IHS under license with ISO
No reproduction or networking permitted without license from IHS
Not for Resale

Bibliography

[1] ISO 31 (all parts), *Quantities and units*

[2] ISO 284, *Conveyor belts — Electrical conductivity — Specification and test method*

[3] ISO 527-3, *Plastics — Determination of tensile properties — Part 3: Test conditions for films and sheets*

[4] ISO 554, *Standard atmospheres for conditioning and/or testing — Specifications*

[5] ISO 1000, *SI units and recommendations for the use of their multiples and of certain other units*

[6] ISO 1924-2, *Paper and board — Determination of tensile properties — Part 2: Constant rate of elongation method*

[7] ISO 4046 (all parts), *Paper, board, pulps and related terms — Vocabulary*

[8] ISO 4288, *Geometrical Product Specifications (GPS) — Surface texture: Profile method — Rules and procedures for the assessment of surface texture*

[9] ISO 4593, *Plastics — Film and sheeting — Determination of thickness by mechanical scanning*

[10] ISO 4677-1, *Atmospheres for conditioning and testing — Determination of relative humidity — Part 1: Aspirated psychrometer method*

[11] ISO 8226-2, *Paper and board — Measurement of hygroexpansivity — Part 2: Hygroexpansivity up to a maximum relative humidity of 86 %*

[12] EN 25651, *Paper, board and pulps — Units for expressing properties*

[13] International vocabulary of basic and general terms in metrology[3)]

[14] CR 13875, *Identification card systems — Intersector thin flexible cards — Security features*

[15] CR 13909, *Identification card systems — Intersector thin flexible cards — Acceptance criteria*

[16] IEC 60050-221, *International Electrotechnical Vocabulary — Chapter 221: Magnetic materials and components*

3) The second edition of this vocabulary was published by ISO in 1993 in the name of the following organisations; International Bureau of Weights and Measures (BIPM), International Electronical Commission (IEC), International Federation of Clinical Chemistry (IFCC), International Organization for Standardization (ISO), International Union of Pure and Applied Chemistry (IUPAC), International Union of Pure and Applied Physics (IUPAP), International Organisation of Legal Metrology (OIML).

--`,,```,,,,````-`-`,,`,,`,`,,`---
© ISO/IEC 2008 – All rights reserved
Copyright International Organization for Standardization
Provided by IHS under license with ISO
No reproduction or networking permitted without license from IHS
Not for Resale

ICS 35.240.15

Price based on 37 pages

--`,,```,,,,````-`-`,,`,,`,`,,`---

© ISO/IEC 2008 – All rights reserved
Copyright International Organization for Standardization
Provided by IHS under license with ISO
No reproduction or networking permitted without license from IHS
Not for Resale