INTERNATIONAL STANDARD

**ISO/IEC 15286**

First edition
1999-05-15

# Information technology — 130 mm optical disk cartridges for information interchange — Capacity: 5,2 Gbytes per cartridge

*Technologies de l'information — Cartouches de disques optiques de* 130 mm *pour l'échange d'informations — Capacité:* 5,2 Gbytes *par cartouche*

Reference number
ISO/IEC 15286:1999(E)

Copyright International Organization for Standardization
Provided by IHS under license with ISO
No reproduction or networking permitted without license from IHS

Not for Resale

## Contents

*Page*

Section 1 - General ..... 1

1 Scope ..... 1

2 Conformance ..... 2

2.1 Optical Disk Cartridge (ODC) ..... 2
2.2 Generating system ..... 2
2.3 Receiving system ..... 2
2.4 Compatibility statement ..... 2

3 Reference ..... 2

4 Definitions ..... 2

4.1 asymmetry ..... 3
4.2 band ..... 3
4.3 case ..... 3
4.4 clamping zone ..... 3
4.5 control track ..... 3
4.6 Cyclic Redundancy Check (CRC) ..... 3
4.7 defect management ..... 3
4.8 direct overwrite ..... 3
4.9 disk reference plane ..... 3
4.10 entrance surface ..... 3
4.11 Error Correction Code (ECC) ..... 3
4.12 format ..... 3
4.13 hub ..... 3
4.14 interleaving ..... 3
4.15 Kerr rotation ..... 3
4.16 land and groove ..... 3
4.17 logical track ..... 3
4.18 mark ..... 3
4.19 mark edge ..... 3
4.20 mark edge recording ..... 3
4.21 optical disk ..... 3
4.22 optical disk cartridge (ODC) ..... 3
4.23 physical track ..... 3
4.24 polarization ..... 3
4.25 pre-recorded mark ..... 4
4.26 read power ..... 4
4.27 recording layer ..... 4
4.28 Reed-Solomon code ..... 4
4.29 space ..... 4
4.30 spindle ..... 4
4.31 substrate ..... 4
4.32 track pitch ..... 4

©ISO/IEC 1999

All rights reserved. Unless otherwise specified, no part of this publication may be reproduced or utilized in any form or by any means, electronic or mechanical, including photocopying and microfilm, without permission in writing from the publisher.

ISO/IEC Copyright Office • Case postale 56 • CH-1211 Genève 20 • Switzerland

Printed in Switzerland



Copyright International Organization for Standardization
Provided by IHS under license with ISO
No reproduction or networking permitted without license from IHS
Not for Resale

4.33 write-inhibit hole ....4
4.34 write once functionality ....4
4.35 zone....4

5 Conventions and notations....4

5.1 Representation of numbers ....4
5.2 Names....4

6 List of acronyms ....5

7 General description of the optical disk cartridge ....5

8 General requirements....6

8.1 Environments....6
8.1.1 Test environment ....6
8.1.2 Operating environment ....6
8.1.3 Storage environment....6
8.1.4 Transportation....7
8.2 Temperature shock....7
8.3 Safety requirements ....7
8.4 Flammability....7

9 Reference Drive....7

9.1 Optical system ....7
9.2 Optical beam....9
9.3 Read channels....9
9.4 Tracking....9
9.5 Rotation of the disk....10

Section 2 - Mechanical and physical characteristics....10

10 Dimensional and physical characteristics of the case ....10

10.1 General description of the case....10
10.2 Relationship of Sides A and B....10
10.3 Reference axes and case reference planes....10
10.4 Case drawings....10
10.5 Dimensions of the case ....11
10.5.1 Overall dimensions ....11
10.5.2 Location hole ....12
10.5.3 Alignment hole ....12
10.5.4 Surfaces on Reference Planes P....12
10.5.5 Insertion slots and detent features....13
10.5.6 Gripper slots ....14
10.5.7 Write-inhibit holes....14
10.5.8 Media sensor holes ....15
10.5.9 Head and motor window....16
10.5.10 Shutter....16
10.5.11 Slot for shutter opener ....17
10.5.12 Shutter sensor notch....17
10.5.13 User label areas....18
10.6 Mechanical characteristics....18
10.6.1 Materials....18
10.6.2 Mass....18
10.6.3 Edge distortion....18
10.6.4 Compliance....18
10.6.5 Shutter opening force....18
10.7 Drop test ....18

11 Dimensional, mechanical and physical characteristics of the disk ....19

11.1 General description of the disk....19
11.2 Reference axis and plane of the disk....19
11.3 Dimensions of the disk ....19
11.3.1 Hub dimension....19
11.4 Mechanical characteristics....20



Copyright International Organization for Standardization
Provided by IHS under license with ISO
No reproduction or networking permitted without license from IHS Not for Resale

11.4.1 Material ..... 21
11.4.2 Mass ..... 21
11.4.3 Moment of inertia ..... 21
11.4.4 Imbalance ..... 21
11.4.5 Axial deflection ..... 21
11.4.6 Axial acceleration ..... 21
11.4.7 Radial runout ..... 21
11.4.8 Radial acceleration ..... 22
11.4.9 Tilt ..... 22
11.5 Optical characteristics ..... 22
11.5.1 Index of refraction ..... 22
11.5.2 Thickness ..... 22
11.5.3 Birefringence ..... 22
11.5.4 Vertical Birefringence ..... 22
11.5.5 Reflectance ..... 23
11.5.5.1 General ..... 23
11.5.5.2 Measured value ..... 23
11.5.5.3 Requirement ..... 23

12 Interface between cartridge and drive ..... 23

12.1 Clamping method ..... 23
12.2 Clamping force ..... 23
12.3 Capture cylinder ..... 23
12.4 Disk position in the operating condition ..... 24

Section 3 - Format of information ..... 39

13 Track geometry ..... 39

13.1 Track shape ..... 39
13.2 Direction of track spiral ..... 39
13.3 Track pitch ..... 39
13.4 Logical track number ..... 39
13.5 Physical track number ..... 39

14 Track format ..... 39

14.1 Physical track layout ..... 39
14.2 Logical track layout ..... 40
14.3 Radial alignment ..... 40
14.4 Sector number ..... 40

15 Sector format ..... 40

15.1 Sector layout ..... 40
15.2 Sector mark ..... 42
15.3 VFO fields ..... 43
15.4 Address Mark (AM) ..... 44
15.5 ID fields ..... 44
15.6 Postamble (PA) ..... 44
15.7 Transition Area ($TA_1$) ..... 45
15.8 Gap ..... 45
15.9 Flag ..... 45
15.10 Auto Laser Power Control (ALPC) ..... 45
15.11 Sync ..... 45
15.12 Data field ..... 46
15.12.1 User data bytes ..... 46
15.12.2 CRC and ECC bytes ..... 46
15. 12.3 Bytes for Sector Written Flag (SWF) ..... 46
15.12.4 The bytes following SWF in the Data field of the 1 024-byte and 512-byte sector format ..... 46
15.12.5 Resync bytes ..... 47
15.13 Postamble field ($PA_2$) ..... 47
15.14 Buffer field ..... 47
15.15 Transition Area ($TA_2$) ..... 47

16 Recording code ..... 47



Copyright International Organization for Standardization
Provided by IHS under license with ISO
No reproduction or networking permitted without license from IHS Not for Resale

17 Formatted Zone....48

17.1 General description of the Formatted Zone....48
17.2 Division of the Formatted Zone....48
17.2.1 Lead-in Zone....50
17.2.2 Manufacturer Zones....50
17.2.2.1 Outer Manufacturer Zone....50
17.2.2.2 Inner Manufacturer Zone....51
17.2.3 User Zone....51
17.2.4 Reflective Zone....51
17.2.5 Control Track Zones....51
17.3 Control Track PEP Zone....51
17.3.1 Recording in the PEP Zone....52
17.3.2 Format of the tracks of the PEP Zone....52
17.3.2.1 Format of a sector....52
17.3.2.1.1 Preamble field....53
17.3.2.1.2 Sync field....53
17.3.2.1.3 Sector Number field....53
17.3.2.1.4 Data field....53
17.3.2.1.5 CRC....55
17.3.2.2 Summary of the format of the Data field of a sector....56
17.4 Control Track SFP Zones....56
17.4.1 Duplicate of the PEP information....57
17.4.2 Media information....57
17.4.3 System Information....59

18 Layout of the User Zone....60

18.1 General description of the User Zone....60
18.2 Divisions of the User Zone....60
18.3 User Area....61
18.4 Defect Management Areas (DMAs)....66
18.5 Disk Definition Structure (DDS)....67
18.6 Rewritable Zone....70
18.6.1 Location....71
18.6.2 Partitioning....71
18.7 Embossed Zone....71
18.7.1 Location....71
18.7.2 Partitioning....71
18.7.3 Parity sectors....71
18.8 Write Once Zone....72
18.8.1 Location....72
18.8.2 Partitioning....72

19 Defect Management in the Rewritable and Write Once Zones....72

19.1 Initialization of the disk....72
19.2 Certification....73
19.2.1 Slipping Algorithm....73
19.2.2 Linear Replacement Algorithm....73
19.3 Disks not certified....73
19.4 Write procedure....74
19.5 Primary Defect List (PDL)....74
19.6 Secondary Defect List (SDL)....75

Section 4 - Characteristics of embossed information....76

20 Method of testing....76

20.1 Environment....76
20.2 Use of the Reference Drive....76
20.2.1 Optics and mechanics....76
20.2.2 Read power....77
20.2.3 Read channels....77
20.2.4 Tracking....77
20.3 Definition of signals....77

21 Signal from grooves....78



Copyright International Organization for Standardization
Provided by IHS under license with ISO
No reproduction or networking permitted without license from IHS Not for Resale

21.1 Cross-track signal ..... 79
21.2 Push-pull ratio ..... 79
21.3 Divided push-pull signal ..... 79
21.4 Phase depth ..... 80
21.5 Track location ..... 80

22 Signals from Headers ..... 80

22.1 Sector Mark Signals ..... 80
22.2 VFO signals ..... 80
22.3 Address Mark, ID and PA signals ..... 81
22.4 Timing jitter ..... 81
22.5 Asymmetry ..... 81

23 Signals from embossed Recording fields ..... 81

23.1 Signal amplitude ..... 81
23.2 Asymmetry ..... 82
23.3 Timing Jitter ..... 82
23.4 Byte Errors ..... 82

24 Signals from Control Track PEP marks ..... 82

Section 5 - Characteristics of the recording layer ..... 83

25 Method of testing ..... 83

25.1 Environment ..... 83
25.2 Reference Drive ..... 83
25.2.1 Optics and mechanics ..... 83
25.2.2 Read power ..... 83
25.2.3 Read Channel ..... 84
25.2.4 Tracking ..... 84
25.2.5 Signal detection for testing purposes ..... 84
25.3 Write conditions ..... 84
25.3.1 Write pulse and power ..... 84
25.3.2 Write magnetic field and temperature ..... 85
25.3.3 Pulse power determination ..... 85
23.3.4 Media power sensitivity ..... 85
25.4 Erase conditions ..... 86
25.4.1 Erase power ..... 86
25.4.2 Erase magnetic field ..... 86
25.5 Definition of signals ..... 86

26 Magneto-optical characteristics ..... 86

26.1 Figure of merit for magneto-optical signal ..... 86
26.2 Imbalance of magneto-optical signal ..... 86

27 Write characteristics ..... 87

27.1 Resolution ..... 87
27.2 Narrow-band signal-to-noise ratio (NBSNR) ..... 87
27.3 Cross-talk ratio ..... 88
27.3.1 Rewritable track test method ..... 88
27.4 Timing Jitter ..... 88
27.5 Media thermal interaction ..... 89

28 Erase power determination ..... 89

Section 6 - Characteristics of user data ..... 90

29 Method of testing ..... 90

29.1 Environment ..... 90
29.2 Reference Drive ..... 90
29.2.1 Optics and mechanics ..... 90
29.2.2 Read power ..... 90
29.2.3 Read Channel ..... 90
29.2.4 Mark Quality ..... 91



Copyright International Organization for Standardization
Provided by IHS under license with ISO
No reproduction or networking permitted without license from IHS Not for Resale

29.2.5 Channel bit clock ....91
29.2.6 Binary-to-digital converters ....91
29.2.7 Error correction ....91
29.2.8 Tracking ....91

30 Minimum quality of a sector ....91

30.1 Headers ....92
30.1.1 Sector Mark ....92
30.1.2 ID fields ....92
30.2 User-written data ....92
30.2.1 Recording field ....92
30.2.2 Byte errors ....92
30.2.3 Asymmetry ....92
30.2.4 Timing jitter ....92

31 Data interchange requirements ....92

31.1 Tracking ....92
31.2 User-written data ....92
31.3 Embossed data ....92
31.4 Quality of disk ....92

**Annexes** ....93

A - Air cleanliness class 100 000 ....93

B - Edge distortion test ....94

C - Compliance test ....96

D - Test method for measuring the adsorbent force of the hub ....98

E - CRC for ID fields ....100

F - Interleave, CRC, ECC, Resync for the data field ....101

G - Determination of Resync pattern ....110

H - Read Channel for measuring jitter ....115

J - Timing jitter measuring procedure ....116

K - Definition of write pulse shape ....118

L - Measurement of figure of merit ....120

M - Implementation Independent Mark Quality Determination (IIMQD) for the interchange of recorded media ....121

N - Requirements for interchange ....124

P - Measurement implementation for Cross-track signal ....126

Q - Asymmetry measuring definition ....127

R - Office environment ....129

S - Derivation of the operating climatic environment ....130

T - Transportation ....135

U - Sector retirement guidelines ....136

V - Track deviation measurement ....137



Copyright International Organization for Standardization
Provided by IHS under license with ISO
No reproduction or networking permitted without license from IHS
Not for Resale

W - Values to be implemented in existing and future standards ..... 141

X - Measurement of the vertical birefringence of the substrate ..... 142

Y - Guidelines for the use of Type WO and WO-DOW ODCs ..... 144

Z - Laser power calibration for evaluation of media power sensitivity ..... 145

--`,,```,,,,````-`-`,,`,,`,`,,`---



Copyright International Organization for Standardization
Provided by IHS under license with ISO
No reproduction or networking permitted without license from IHS Not for Resale

## Foreword

ISO (the International Organization for Standardization) and IEC (the International Electrotechnical Commission) form the specialized system for worldwide standardization. National bodies that are members of ISO or IEC participate in the development of International Standards through technical committees established by the respective organization to deal with particular fields of technical activity. ISO and IEC technical committees collaborate in fields of mutual interest. Other international organizations, governmental and non-governmental, in liaison with ISO and IEC, also take part in the work.

In the field of information technology, ISO and IEC have established a joint technical committee, ISO/IEC JTC 1. Draft International Standards adopted by the joint technical committee are circulated to national bodies for voting. Publication as an International Standard requires approval by at least 75 % of the national bodies casting a vote.

International Standard ISO/IEC 15286 was prepared by Joint Technical Committee ISO/IEC JTC 1, *Information technology*, Subcommittee SC 23, *Optical disk cartridges for information interchange.*

Annexes A to Q form an integral part of this International Standard. Annexes R to Z are for information only.



Copyright International Organization for Standardization
Provided by IHS under license with ISO
No reproduction or networking permitted without license from IHS Not for Resale

# Information technology - 130 mm optical disk cartridges for information interchange - Capacity: 5,2 Gbytes per cartridge

## Section 1 - General

## 1 Scope

This International Standard specifies the characteristics of a series of related 130 mm optical disk cartridges (ODCs) by using a number of Type designations.

A disk has two sides, called Side A and Side B. Each side can have a nominal capacity of 2,6 Gbytes.

**Type R/W** provides for data to be written, read and erased many times over the recording surface of the corresponding disk side, using the thermo-magnetic and magneto-optical effects.

**Type P-ROM** provides for a part of the disk surface to be pre-recorded and reproduced by stamping or other means. This part of the disk is read without recourse to the magneto-optical effect. All parts which are not pre-recorded provide for data to meet the requirements of Type R/W.

**Type O-ROM** provides for the whole of the disk surface to be pre-recorded and reproduced by stamping or other means. The corresponding disk sides are read without recourse to the magneto-optical effect.

**Type DOW** provides for data to be written and read many times over the recording surface of the corresponding disk side, using the direct overwrite thermo-magnetic and magneto-optical effects requiring a single external magnetic field.

**Type P-DOW** provides for a part of the disk surface to be pre-recorded and reproduced by stamping or other means. This part of the disk is read without recourse to the magneto-optical effect. All parts which are not pre-recorded provide for data to meet the requirements of Type DOW.

**Type WO** provides write once, read multiple functionality using the thermo-magnetic and magneto-optical effects.

**Type WO-DOW** provides write once, read multiple functionality using the direct overwrite thermo-magnetic and magneto-optical effects.

In addition, for each Type, this International Standard provides for cartridges containing a disk with a sector size of 512 bytes, cartridges containing a disk with a sector size of 1 024 bytes and cartridges containing a disk with a sector size of 2 048 bytes. All sectors of a disk are the same size.

This International Standard specifies

- the conditions for conformance testing and the Reference Drive;
- the environments in which the cartridges are to be operated and stored;
- the mechanical, physical and dimensional characteristics of the cartridge, so as to provide mechanical interchangeability between data processing systems;



--`,,```,,,,````-`-`,,`,,`,`,,`---
Copyright International Organization for Standardization
Provided by IHS under license with ISO
No reproduction or networking permitted without license from IHS Not for Resale

- the format of the information on the disk, both embossed and user-written, including the physical disposition of the tracks and sectors, the error correction codes, the modulation methods used;
- the characteristics of the embossed information on the disk;
- the magneto-optical characteristics of the disk, enabling processing systems to write data onto the disk;
- the minimum quality of user-written data on the disk, enabling data processing systems to read data from the disk.

This International Standard provides for interchange between optical disk drives. Together with a Standard for volume and file structure it provides for full data interchange between data processing systems.

## 2 Conformance

### 2.1 Optical Disk Cartridge (ODC)

An ODC shall be in conformance with this International Standard if it meets all mandatory requirements specified therein.

A claim of conformance with this International Standard shall specify the Type(s) implemented.

### 2.2 Generating system

A claim of conformance with this International Standard shall specify which of Types R/W, DOW, P-ROM, P-DOW, O-ROM, WO and WO-DOW is(are) supported. A system generating an ODC for interchange shall be in conformance with this International Standard if it meets the mandatory requirements of this Standard for the Type(s) supported.

### 2.3 Receiving system

A claim of conformance with this International Standard shall specify which Type(s) is(are) supported.

A system receiving an ODC for interchange shall be in conformance with this International Standard if it is able to process any recording made on the cartridge according to 2.1 on the Type(s) specified.

### 2.4 Compatibility statement

A claim of conformance with this International Standard shall include a statement listing any other International Optical Disk Cartridge Standard supported by the system for which conformance is claimed. This statement shall specify the number of the Standard (s), including, where appropriate, the ODC Type(s), or the Types of side, and whether support includes reading only or both reading and writing.

## 3 Normative reference

The following standard contains provisions which, through reference in this text, constitute provisions of this International Standard. At the time of publication, the edition indicated was valid. All standards are subject to revision, and parties to agreements based on this International Standard are encouraged to investigate the possibility of applying the most recent edition of the standard indicated below. Members of IEC and ISO maintain registers of currently valid International Standards.

IEC 60950:1991, *Safety of information technology equipment.*

## 4 Definitions

For the purposes of this International Standard, the following definitions apply.



Copyright International Organization for Standardization
Provided by IHS under license with ISO
No reproduction or networking permitted without license from IHS Not for Resale

**4.1 asymmetry :** The deviation between the centre levels of the signals which give maximum and minimum amplitude.

**4.2 band :** An annular area within the user zone on the disk having a constant clock frequency.

**4.3 case :** The housing for an optical disk, that protects the disk and facilitates disk interchange.

**4.4 clamping zone :** The annular part of the disk within which the clamping force is applied by the clamping device.

**4.5 control track :** A track containing the information on media parameters and format necessary for writing, reading and erasing the remaining tracks on the optical disk.

**4.6 Cyclic Redundancy Check (CRC) :** A method for detecting errors in data.

**4.7 defect management :** A method for handling the defective areas on the disk.

**4.8 direct overwrite:** a thermo-magnetic recording method using a specially designed media that does not require a separate erase pass.

**4.9 disk reference plane :** A plane defined by the perfectly flat annular surface of an ideal spindle onto which the clamping zone of the disk is clamped, and which is normal to the axis of rotation.

**4.10 entrance surface :** The surface of the disk on to which the optical beam first impinges.

**4.11 Error Correction Code (ECC) :** An error-detecting code designed to correct certain kinds of errors in data.

**4.12 format :** The arrangement or layout of information on the disk.

**4.13 hub :** The central feature on the disk which interacts with the spindle of the disk drive to provide radial centring and the clamping force.

**4.14 interleaving :** The process of allocating the physical sequence of units of data so as to render the data more immune to burst errors.

**4.15 Kerr rotation :** The rotation of the plane of polarization of an optical beam upon reflection from the recording layer as caused by the magneto-optical Kerr effect.

**4.16 land and groove :** A trench-like feature of the disk, applied before the recording of any information, and used to define the track location. The groove is located nearer to the entrance surface than the land with which it is paired to form a track.

**4.17 logical track :** Either 31 consecutive sectors for disks with 512-byte sectors, 17 consecutive sectors for disks with 1 024-byte sectors or 7 consecutive sectors for disks with 2 048-byte sectors in one or more physical tracks. The first sector of each logical track is assigned sector number 0.

**4.18 mark :** A feature of the recording layer which may take the form of a magnetic domain, a pit, or any other type or form that can be sensed by the optical system. The pattern of marks represents the data on the disk.

NOTE - Subdivisions of a sector which are named "mark" are not marks in the sense of this definition

**4.19 mark edge :** The transition between a region with a mark and one without a mark or vice versa, along the track.

**4.20 mark edge recording :** A recording method which uses a mark edge to represent a Channel bit.

**4.21 optical disk :** A disk that will accept and retain information in the form of marks in a recording layer, that can be read with an optical beam.

**4.22 optical disk cartridge (ODC):** A device consisting of a case containing an optical disk.

**4.23 physical track :** The path which is followed by the focus of the optical beam during one revolution of the disk. This path is not directly addressable.

**4.24 polarization :** The direction of polarization of an optical beam is the direction of the electric vector of the beam.



--`,,```,,,,````-`-`,,`,,`,`,,`---

Copyright International Organization for Standardization
Provided by IHS under license with ISO
No reproduction or networking permitted without license from IHS Not for Resale

NOTE - The plane of polarization is the plane containing the electric vector and the direction of propagation of the beam. The polarization is right-handed when to an observer looking in the direction of propagation of the beam, the end-point of the electric vector would appear to describe an ellipse in the clockwise sense.

**4.25 pre-recorded mark :** A mark so formed as to be unalterable by magneto-optical means.

**4.26 read power :** The read power is the optical power, incident at the entrance surface of the disk, used when reading.

NOTE - It is specified as a maximum power that may be used without damage to the written data. Lower power may be used providing that the signal-to-noise ratio and other requirements of this International Standard are met.

**4.27 recording layer :** A layer of the disk on, or in, which data is written during manufacture and/or use.

**4.28 Reed-Solomon code :** An error detection and/or correction code which is particularly suited to the correction of errors which occur in bursts or are strongly correlated.

**4.29 space :** The area between marks along the track.

**4.30 spindle :** The part of the disk drive which contacts the disk and/or hub.

**4.31 substrate :** A transparent layer of the disk, provided for mechanical support of the recording layer, through which the optical beam accesses the recording layer.

**4.32 track pitch :** The distance between adjacent track centrelines, measured in a radial direction.

**4.33 write-inhibit hole :** A hole in the case which, when detected by the drive to be open, inhibits both write and erase operations.

**4.34 write-once functionality :** A technique whereby a rewritable MO ODC is restricted to initialization and writing once only; erase is not permitted.

**4.35 zone :** An annular area of the disk.

## 5 Conventions and notations

### 5.1 Representation of numbers

- A measured value is rounded off to the least significant digit of the corresponding specified value. It implies that a specified value of 1,26 with a positive tolerance of +0,01, and a negative tolerance of -0,02 allows a range of measured values from 1,235 to 1,275.

- Letters and digits in parentheses represent numbers in hexadecimal notation.

- The setting of a bit is denoted by ZERO or ONE.

- Numbers in binary notation and bit combinations are represented by strings of ZEROs and ONEs.

- Numbers in binary notation and bit combinations are shown with the most significant bit to the left.

- Negative values of numbers in binary notation are given in TWO's complement.

- In each field the data is recorded so that the most significant byte (byte 0) is recorded first. Within each byte the least significant bit is numbered 0 and is recorded last, the most significant bit (numbered 7 in an 8-bit byte) is recorded first. This order of recording applies also to the data input of the Error Detection and Correction circuits and their output.

- Unless otherwise stated, groups of decimal digits of the form xx ... x/yy ... y/zz ... z indicate that the value xx ... x applies to 2 048-byte sectors, yy ... y applies to 1 024-byte sectors and that the value zz ... z applies to 512-byte sectors.

### 5.2 Names

The names of entities, e.g. specific tracks, fields, etc., are given with a capital initial.



Copyright International Organization for Standardization
Provided by IHS under license with ISO
No reproduction or networking permitted without license from IHS Not for Resale

## 6 List of acronyms

| | |
|---|---|
| ALPC | Auto Laser Power Control |
| AM | Address Mark |
| CRC | Cyclic Redundancy Code |
| DDS | Disk Definition Structure |
| DMA | Defect Management Area |
| DMP | Defect Management Pointers |
| DOW | Direct Overwrite |
| ECC | Error Correction Code |
| EDAC | Error Detection And Correction |
| ID | Identifier |
| LBA | Logical Block Address |
| LSB | Least Significant Byte |
| MO | Magneto-Optical |
| MSB | Most Significant Byte |
| ODC | Optical Disk Cartridge |
| O-ROM | Optical Read Only Memory |
| PA | Postamble |
| PDL | Primary Defect List |
| PEP | Phase-Encoded Part of the Control Tracks |
| P-DOW | Partial ROM Direct Overwrite |
| P-ROM | Partial Read Only Memory |
| RLL(1,7) | Run Length Limited (code) |
| R-S | Reed-Solomon (code) |
| R/W | Rewritable |
| R-S/LDC | Reed-Solomon Long Distance Code |
| SCSI | Small Computer System Interface |
| SDL | Secondary Defect List |
| SFP | Standard Formatted Part of the Control Tracks |
| SM | Sector Mark |
| SWF | Sector Written Flag |
| TA | Transition Area |
| TIA | Time Interval Analyzer |
| VFO | Variable Frequency Oscillator |
| WO | Write Once |
| WO-DOW | Write Once Direct Overwrite |
| ZCAV | Zoned Constant Angular Velocity |

## 7 General description of the optical disk cartridge

The optical disk cartridge which is the subject of this International Standard consists of a case containing an optical disk.

The case is a protective enclosure for the disk. It has access windows covered by a shutter. The windows are automatically uncovered by the drive when the cartridge is inserted into it.

The optical disk consists of two sides assembled together with their recording layers on the inside.

The optical disk may be recordable on both sides. Data can be written onto the disk as marks in the form of magnetic domains in the recording layer and can be erased from it with a focused optical beam, using the thermo-magnetic effect. Data may be written over existing data by modulating the intensity of the optical beam. The data can be read with a focused optical beam, using the magneto-optical effect. The beam accesses the recording layer through the transparent substrate of the disk.



Copyright International Organization for Standardization
Provided by IHS under license with ISO
No reproduction or networking permitted without license from IHS Not for Resale

Part of the disk or the entire disk may contain read-only data in the form of pre-embossed pits. This data can be read using the diffraction of the optical beam by the embossed pits.

The entire disk may be used for write once recording of data using the thermo-magnetic effect. This data can be read using the magneto-optic effect.

# 8 General requirements

## 8.1 Environments

### 8.1.1 Test environment

The test environment is the environment where the air immediately surrounding the optical disk cartridge has the following properties:

| | |
|---|---|
| temperature | : 23 °C ± 2 °C |
| relative humidity | : 45 % to 55 % |
| atmospheric pressure | : 60 kPa to 106 kPa |
| air cleanliness | : Class 100 000 (see annex A) |

No condensation on or in the optical disk cartridge shall occur. Before testing, the optical disk cartridge shall be conditioned in this environment for 48 hours minimum. It is recommended that, before testing, the entrance surface of the disk be cleaned according to the instructions of the manufacturer of the disk.

Unless otherwise stated, all tests and measurements shall be made in this test environment.

### 8.1.2 Operating environment

This International Standard requires that an optical disk cartridge which meets all requirements of this Standard in the specified test environment provides data interchange over the specified ranges of environmental parameters in the operating environment. ( See also annex R.)

The operating environment is the environment where the air immediately surrounding the optical disk cartridge has the following properties:

| | |
|---|---|
| temperature | : 5 °C to 55 °C |
| relative humidity | : 3 % to 85 % |
| absolute humidity | : 1 g/m$^3$ to 30 g/m$^3$ |
| atmospheric pressure | : 60 kPa to 106 kPa |
| temperature gradient | : 10 °C/h max. |
| relative humidity gradient | : 10 %/h max. |
| air cleanliness | : office environment (see also annex R.1) |
| magnetic field strength at the recording layer for | |
| any condition under which a beam is in focus | : 32 000 A/m max. (see also annex R.2) |
| magnetic field strength at the recording layer | |
| during any other condition | : 48 000 A/m max. |

No condensation on or in the optical disk cartridge shall occur. If an optical disk cartridge has been exposed to conditions outside those specified in this clause, it shall be acclimatized in an allowed operating environment for at least 2 hours before use. (See also annex S).

### 8.1.3 Storage environment

The optical disk cartridge without any protective enclosure shall not be stored in an environment outside the range allowed for storage. The storage environment is defined as an environment where the air immediately surrounding the optical disk cartridge has the following properties:



--`,,```,,,,````-`-`,,`,,`,`,,`---

Copyright International Organization for Standardization
Provided by IHS under license with ISO
No reproduction or networking permitted without license from IHS Not for Resale

| | |
|---|---|
| temperature | : -10 °C to 55 °C |
| relative humidity | : 3 % to 90 % |
| absolute humidity | : 1 g/m$^3$ to 30 g/m$^3$ |
| atmospheric pressure | : 60 kPa to 106 kPa |
| temperature gradient | : 15 °C/h max. |
| relative humidity gradient | : 10 %/h max. |
| air cleanliness | : Office environment (see also annex R.1) |

magnetic field strength at the recording layer: 48 000 A/m max.

No condensation on or in the optical disk cartridge shall occur.

#### 8.1.4 Transportation

This International Standard does not specify requirements for transportation; guidance is given in annex T.

### 8.2 Temperature shock

The optical disk cartridge shall withstand a temperature shock of up to 20 °C when inserted into, or removed from, the drive.

### 8.3 Safety requirements

The cartridge shall satisfy the safety requirements of Standard IEC 60950, when used in the intended manner or in any foreseeable use in an information processing system.

### 8.4 Flammability

The cartridge and its components shall be made from materials that comply with the flammability class for HB materials, or better, as specified in Standard IEC 60950.

## 9 Reference Drive

The Reference Drive is a drive several critical components of which have well defined properties and which is used to test the write, read and erase parameters of the disk for conformance to this International Standard. The critical components vary from test to test. This clause gives an outline of all components; components critical for tests in specific clauses are specified in those clauses.

### 9.1 Optical system

The basic set-up of the optical system of the Reference Drive used for measuring the write, read and erase parameters is shown in figure 1. Different components and locations of components are permitted, provided that the performance remains the same as that of the set-up in figure 1. The optical system shall be such that the detected light reflected from the entrance surface of the disk is minimized so as not to influence the accuracy of the measurements.



--`,,```,,,,````-`-`,,`,,`,`,,`---

Copyright International Organization for Standardization
Provided by IHS under license with ISO
No reproduction or networking permitted without license from IHS Not for Resale

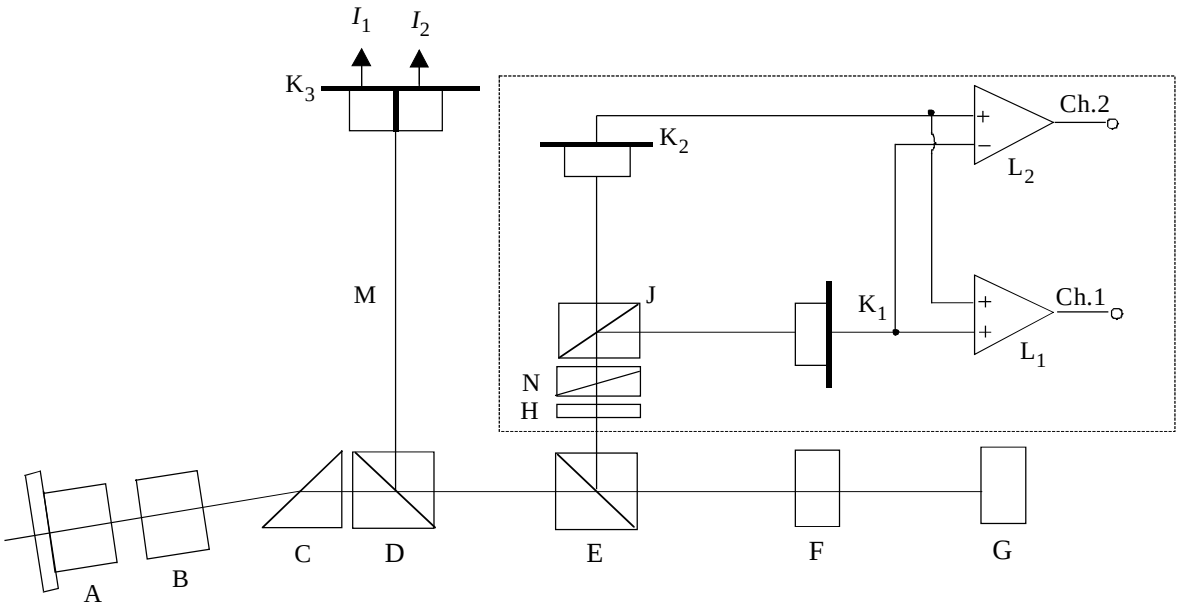


95-0041-A

| | | | |
|---|---|---|---|
| A | Laser diode | G | Optical disk |
| B | Collimator lens | H | Optional half-wave plate |
| C | Optional shaping prism | $I_1$, $I_2$ | Tracking signals from photodiode $K_3$ |
| Ch.1 | Channel 1 | J | Polarizing beam splitter |
| Ch.2 | Channel 2 | $K_1$, $K_2$ | Photodiodes for Channels 1 and 2 |
| D | Beam splitter | $K_3$ | Split photodiode |
| E | Polarizing beam splitter | $L_1$, $L_2$ | d.c.-coupled amplifiers |
| F | Objective lens | M | Tracking Channel (see 20.3) |
| | | N | Phase retarder |

**Figure 1 - Optical system of the Reference Drive**

In the absence of polarization changes in the disk, the polarizing beam splitter J shall be aligned to make the signal of detector $K_1$ equal to that of detector $K_2$. The direction of polarization in this case is called the neutral direction. The phase retarder N shall be adjusted such that the optical system does not have more than 2,5° phase retardation between the neutral polarization and the polarization perpendicular to it. This position of the retarder is called the neutral position.

The phase retarder can be used for the measurement of the narrow-band signal-to-noise ratio (see 27.2).

The beam splitter J shall have a p-s intensity reflectance ratio of at least 100.

The beam splitter E shall have an intensity reflectance $R_p$ from F to H of nominally 0,30 for the neutral polarization direction. The reflectance $R_s$ for the polarization perpendicular to the neutral direction shall be nominally 0,95. The actual value of $R_s$ shall not be smaller than 0,90.



Copyright International Organization for Standardization
Provided by IHS under license with ISO
No reproduction or networking permitted without license from IHS Not for Resale

The imbalance of the magneto-optical signal is specified for a beam splitter with nominal reflectance. If the measurement is made on a drive with reflectance's $R_p'$ and $R_s'$ for beam splitter E, then the measured imbalance shall be multiplied by

$$\sqrt{\frac{R_s R_p'}{R_p R_s'}}$$

to make it correspond to the nominal beam splitter E.

The output of Channel 1 is the sum of the currents through photodiodes $K_1$ and $K_2$ , and is used for reading embossed marks. The output of Channel 2 is the difference between photo-diode currents, and is used for reading user-written marks with the magneto-optical effect.

### 9.2 Optical beam

The focused optical beam used for writing, reading and erasing data shall have the following properties:

| | | |
|---|---|---|
| a) | Wavelength ( λ ) | 685 nm $^{+10\ nm}_{-10\ nm}$ |
| b) | Wavelength ( λ) divided by the numerical aperture of the objective lens (NA) | λ / NA = 1,245 μm ± 0,018 μm |
| c) | Filling D/W of the aperture of the objective lens | 0,85 ± 0,05 |
| d) | Variance of the wavefront of the optical beam near the recording layer after passing through an ideal substrate | 0 to $\lambda^2$/ 330 |
| e) | Polarization | Linear - parallel to the groove where appropriate |
| f) | Extinction ratio | 0,01 max. |

g) The optical power and pulse width for writing, reading and erasing are specified in later clauses of this standard.

D is the diameter of the lens aperture and W is the beam diameter of the Gaussian beam where the intensity is $1/e^2$ of the maximum intensity.

The extinction ratio is the ratio of the minimum over the maximum power observed behind a linear polarizer in the optical beam, which is rotated over at least 180°.

### 9.3 Read channels

Two read channels shall be provided to generate signals from the marks in the recording layer. Channel 1 shall be used for reading the embossed marks, using the diffraction of the optical beam by the marks. Channel 2 shall be used for reading the written marks, using the rotation of the polarization of optical beam due to the magneto-optical effect of the marks. The read amplifiers after the photo-detectors in Channel 1 and Channel 2 shall have a flat response within 1dB from d.c. to 37 MHz.

Unless otherwise stated, the signal of Channel 1 and 2 are not equalized before detection. The signal from both channels shall be low-pass filtered with a 3-pole Butterworth filter with a cut-off frequency of one half the Channel clock frequency.

### 9.4 Tracking

The Tracking Channel of the drive provides the tracking error signals to control the servos for the axial and radial tracking of the optical beam. The method of generating the axial tracking error is not



Copyright International Organization for Standardization
Provided by IHS under license with ISO
No reproduction or networking permitted without license from IHS Not for Resale

specified for the Reference Drive. The radial tracking error is generated by a split photodiode detector in the tracking Channel. The division of the diode runs parallel to the image of the tracks on the diode.

The requirements for the accuracy with which the focus of the optical beam must follow the tracks is specified in 20.2.4.

### 9.5 Rotation of the disk

The spindle shall position the disk as specified in 12.4. It shall rotate the disk at 50,0 Hz ± 0,5 Hz. The direction of rotation of the disk side being tested shall be counter-clockwise when viewed from the objective lens.

## Section 2 - Mechanical and physical characteristics

## 10 Dimensional and physical characteristics of the case

### 10.1 General description of the case

The case (see figure 3) is a rigid protective container of rectangular shape. It has spindle windows on both sides to allow the spindle of the drive to clamp the disk by its hub. Both sides of the case have a head window, one for the optical head of the drive, the other for the magnetic head providing the necessary magnetic fields. A shutter uncovers the windows upon insertion into the drive, and automatically covers them upon removal from the drive. The case has write-inhibit, reflectance detection, and rotation direction detection features, and gripper slots for an autochanger.

### 10.2 Relationship of Sides A and B

The features essential for physical interchangeability are represented in figure 3. When Side A of the cartridge faces upwards, Side A of the disk faces downwards. Sides A and B of the case are identical as far as the features given here are concerned, except as noted below. The description is given for one side only. References to Sides A and B can be changed to B or A respectively.

Only the shutter and the slot for the shutter opener, described in 10.5.10 and 10.5.11, are not identical for both sides of the case.

### 10.3 Reference axes and case reference planes

There is a reference plane P for each side of the case. Each reference plane P contains two orthogonal axes X and Y to which the dimensions of the case are referred. The intersection of the X and Y axes defines the centre of the location hole. The X axis extends through the centre of the alignment hole.

### 10.4 Case drawings

The case is represented schematically by the following drawings.

- Figure 2 shows the hub dimensions.
- Figure 3 shows a composite drawing of Side A of the case in isometric form, with the major features identified from Side A.
- Figure 4 shows the envelope of the case with respect to a location hole at the intersection of the X and Y axes and reference plane P.
- Figure 5 shows the surfaces S1, S2, S3 and S4 which establish the reference plane P.
- Figure 5a shows the details of surface S3.
- Figure 6 shows the details of the insertion slot and detent.
- Figure 7 shows the gripper slots, used for automatic handling.
- Figure 8 shows the write-inhibit holes.



Copyright International Organization for Standardization
Provided by IHS under license with ISO
No reproduction or networking permitted without license from IHS Not for Resale

- Figure 9 shows the media ID sensor holes.
- Figure 10 shows the shutter sensor notch.
- Figure 11 shows the head and motor window.
- Figure 12 shows the shutter opening features.
- Figure 13 shows the capture cylinder.
- Figure 14 shows the user label areas.

### 10.5 Dimensions of the case

The dimensions of the case shall be measured in the test environment. The dimensions of the case in an operating environment can be estimated from the dimensions specified in this clause.

#### 10.5.1 Overall dimensions

The total length of the case (see figure 4) shall be

$$L_1 = 153{,}0 \text{ mm} \pm 0{,}4 \text{ mm}$$

The distance from the top of the case to the reference axis X shall be

$$L_2 = 127{,}0 \text{ mm} \pm 0{,}3 \text{ mm}$$

The distance from the bottom of the case to the reference axis X shall be

$$L_3 = 26{,}0 \text{ mm} \pm 0{,}3 \text{ mm}$$

The total width of the case shall be

$$L_4 = 135{,}0 \text{ mm} \begin{matrix} +\ 0{,}0 \text{ mm} \\ -\ 0{,}6 \text{ mm} \end{matrix}$$

The distance from the left-hand side of the cartridge to the reference axis Y shall be

$$L_5 = 128{,}5 \text{ mm} \begin{matrix} +\ 0{,}0 \text{ mm} \\ -\ 0{,}5 \text{ mm} \end{matrix}$$

The distance from the right-hand side of the cartridge to the reference axis Y shall be

$$L_6 = 6{,}5 \text{ mm} \pm 0{,}2 \text{ mm}$$

The width shall be reduced on the top by the radius

$$R_1 = L_4$$

originating from a point defined by $L_5$ and

$$L_7 = 101{,}0 \text{ mm} \pm 0{,}3 \text{ mm}$$

The two corners of the top shall be rounded with a radius

$$R_2 = 1{,}5 \text{ mm} \pm 0{,}5 \text{ mm}$$

and the two corners at the bottom with a radius

$$R_3 = 3{,}0 \text{ mm} \pm 1{,}0 \text{ mm}$$

The thickness of the case shall be

$$L_8 = 11{,}00 \text{ mm} \pm 0{,}30 \text{ mm}$$

The eight long edges of the case shall be rounded with a radius

$$R_4 = 1{,}0 \text{ mm max}$$



Copyright International Organization for Standardization
Provided by IHS under license with ISO
No reproduction or networking permitted without license from IHS Not for Resale

### 10.5.2 Location hole

The centre of the location hole (see figure 4) shall coincide with the intersection of the reference axes X and Y. It shall have a square form with a side length of

$$L_9 = 4{,}10 \text{ mm} \begin{matrix} +\ 0{,}00 \text{ mm} \\ -\ 0{,}06 \text{ mm} \end{matrix}$$

held to a depth of

$L_{10}$ = 1,5 mm (i.e. typical wall thickness)

after which a cavity extends through to the alignment hole on the opposite side of the case.

The lead-in edges shall be rounded with a radius

$R_5$ = 0,5 mm max

### 10.5.3 Alignment hole

The centre of the alignment hole (see figure 4) shall lie on reference axis X at a distance of

$L_{11}$ = 122,0 mm ± 0,2 mm

from the reference axis Y.

The dimensions of the hole shall be

$$L_{12} = 4{,}10 \text{ mm} \begin{matrix} +\ 0{,}00 \text{ mm} \\ -\ 0{,}06 \text{ mm} \end{matrix}$$

and

$$L_{13} = 5{,}0 \text{ mm} \begin{matrix} +\ 0{,}2 \text{ mm} \\ -\ 0{,}0 \text{ mm} \end{matrix}$$

held to a depth of $L_{10}$, after which a cavity extends through to the location hole on the opposite side of the case.

The lead-in edges shall be rounded with radius $R_5$.

### 10.5.4 Surfaces on Reference Planes P

The reference plane P (see figures 5 and 5a) for a side of the case shall contain four surfaces ($S_1$, $S_2$, $S_3$ and $S_4$) on that side of the case, specified as follows:

- Two circular surfaces $S_1$ and $S_2$.

Surface $S_1$ shall be a circular area centred around the square location hole and have a diameter of

$D_1$ = 9,0 mm min

Surface $S_2$ shall be a circular area centred around the rectangular alignment hole and have a diameter of

$D_2$ = 9,0 mm min

- Two elongated surfaces $S_3$ and $S_4$, that follow the contour of the cartridge and shutter edges.

Surfaces $S_3$ and $S_4$ are shaped symmetrically.

Surface $S_3$ shall be defined by two circular sections with radii

$R_6$ = 1,5 mm ± 0,1 mm

with an origin given by



--`,,```,,,,````-`-`,,`,,`,`,,`---

Copyright International Organization for Standardization
Provided by IHS under license with ISO
No reproduction or networking permitted without license from IHS Not for Resale

$L_{14}$ = 4,0 mm ± 0,1 mm

$L_{15}$ = 86,0 mm ± 0,3 mm

and

$R_7$ = 1,5 mm ± 0,1 mm

with an origin given by

$L_{16}$ = 1,9 mm ± 0,1 mm

$L_{17}$ = 124,5 mm ± 0,3 mm

The arc with radius $R_7$ shall continue on the right hand side with radius

$$R_8 = 134{,}0 \text{ mm} \begin{matrix} +\ 0{,}2 \text{ mm} \\ -\ 0{,}7 \text{ mm} \end{matrix}$$

which is a dimension resulting from $L_5 + L_{14} + R_6$ with an origin given by $L_5$ and $L_7$. A straight, vertical line shall smoothly join the arc of $R_6$ to the arc of $R_8$.

The left-hand side of $S_3$ shall be bounded by radius

$R_9$ = 4,5 mm ± 0,3 mm

which is a dimension resulting from $L_{18} + L_{14} - R_6$ with an origin given by

$L_{18}$ = 2,0 mm ± 0,1 mm

$L_{19}$ = 115,5 mm ± 0,3 mm

The left-hand side of the boundary shall be closed by two straight lines. The first one shall smoothly join the arc of $R_6$ to the arc of $R_9$. The second one shall run from the left hand tangent of $R_7$ to its intersection with $R_9$. Along the left hand side of surface $S_3$ there shall be a zone to protect $S_3$ from being damaged by the shutter. In order to keep this zone at a minimum practical width

$R_{10}$ = 4,1 mm max

This radius originates from the same point as $R_9$.

### 10.5.5 Insertion slots and detent features

The case shall have two symmetrical insertion slots with embedded detent features (see figure 6). The slots shall have a length of

$L_{20}$ = 26,0 mm ± 0,3 mm

a width of

$$L_{21} = 6{,}0 \text{ mm} \begin{matrix} +\ 0{,}3 \text{ mm} \\ -\ 0{,}0 \text{ mm} \end{matrix}$$

and a depth of

$L_{22}$ = 3,0 mm ± 0,1 mm

located

$L_{23}$ = 2,5 mm ± 0,2 mm

from reference plane P.

The slots shall have a lead-in chamfer given by



Copyright International Organization for Standardization
Provided by IHS under license with ISO
No reproduction or networking permitted without license from IHS Not for Resale

$L_{24}$ = 0,5 mm max

$L_{25}$ = 5,0 mm max

The detent notch shall be a semi-circle of radius

$R_{11}$ = 3,0 mm ± 0,2 mm

with the origin given by

$L_{26}$ = 13,0 mm ± 0,3 mm

$L_{27}$ = 2,0 mm ± 0,1 mm

$L_{73}$ = 114,0 mm ± 0,3 mm

The dimensions $L_2$, $L_{26}$, and $L_{73}$ are interrelated, their values shall be such so that they are all three within specification.

### 10.5.6 Gripper slots

The case shall have two symmetrical gripper slots (see figure 7) with a depth of

$L_{28}$ = 5,0 mm ± 0,3 mm

from the edge of the case and a width of

$L_{29}$ = 6,0 mm ± 0,3 mm

The upper edge of a slot shall be

$L_{30}$ = 12,0 mm ± 0,3 mm

above the bottom of the case.

### 10.5.7 Write-inhibit holes

Sides A and B shall each have a write-inhibit hole (see figure 8). The case shall include a device for opening and closing each hole. The hole at the left-hand side of Side A of the case, is the write-inhibit hole for Side A of the disk. The protected side of the disk shall be made clear by inscriptions on the case or by the fact that the device for Side A of the disk can only be operated from Side A of the case.

When writing and erasing on Side A of the disk is not allowed, the write-inhibit hole shall be open all through the case. It shall have a diameter

$D_3$ = 4,0 mm min

Its centre shall be specified by

$L_{31}$ = 8,0 mm ± 0,2 mm

$L_{32}$ = 111,0 mm ± 0,3 mm

on Side A of the case.

When writing is allowed on Side A of the disk, the write-inhibit hole shall be closed on Side A of the case, at a depth of typically $L_{10}$, i.e. the wall thickness of the case. In this state, the opposite side of the same hole, at Side B of the case, shall be closed and not recessed from the reference plane P of Side B of the case by more than

$L_{33}$ = 0,5 mm

The opposite side of the write-inhibit hole for protecting Side B of the disk shall have a diameter $D_3$. Its centre shall be specified by $L_{31}$ and

$L_{34}$ = 11,0 mm ± 0,2 mm



Copyright International Organization for Standardization
Provided by IHS under license with ISO
No reproduction or networking permitted without license from IHS Not for Resale

on Side A of the case.

### 10.5.8 Media sensor holes

There shall be two sets of four media sensor holes (see figure 9). The set of holes at the lower left hand corner of Side A of the case pertains to Side A of the disk. The holes shall extend through the case, and have a diameter of

$$D_4 = 4{,}0 \text{ mm} \begin{matrix} +\ 0{,}3 \text{ mm} \\ -\ 0{,}0 \text{ mm} \end{matrix}$$

the positions of their centres shall be specified by $L_{32}$, $L_{34}$ and

$L_{35}$ = 19,5 mm ± 0,2 mm

$L_{36}$ = 17,0 mm ± 0,2 mm

$L_{37}$ = 23,0 mm ± 0,2 mm

$L_{38}$ = 29,0 mm ± 0,2 mm

$L_{39}$ = 93,0 mm ± 0,3 mm

$L_{40}$ = 99,0 mm ± 0,3 mm

$L_{41}$ = 105,0 mm ± 0,3 mm

A hole is deemed to be open when there is no obstruction in this hole over a diameter $D_4$ all through the case.

A hole for Side A of the disk is deemed to be closed, when the hole is closed on both Side A and Side B of the case. The closure shall be recessed from reference plane P by

$L_{42}$ = 0,1 mm max

The holes are numbered consecutively from 1 to 4. Number 1 is the hole closest to the left hand edge of the case.

Hole No. 1 shall indicate high reflectance of Type O-ROM disks. The hole shall be open for a Type O-ROM disk with high reflectance. The hole shall be closed for ODCs of Type R/W, DOW, P-ROM, P-DOW, WO, and WO-DOW specified by this standard.

Hole No. 2 shall indicate whether Side B shall not be used, in which case the hole shall be open. When Side B shall be used, the hole shall be closed.

An optical disk cartridge conforming to this International Standard does not use holes No. 3 and 4. The holes shall be closed. The meaning of the each hole shall be as in table 1.



--`,,```,,,,````-`-`,,`,,`,`,,`---

Copyright International Organization for Standardization
Provided by IHS under license with ISO
No reproduction or networking permitted without license from IHS Not for Resale

**Table 1 - Media sensor holes**

| Sensor hole No. | Indication | Closed | Open |
|---|---|---|---|
| 1 | Reflectance range of disks | Low reflectance | High reflectance |
| 2 | Disk side accessible | Yes | No |
| 3 | Not used | Always | - |
| 4 | Not used | Always | - |

### 10.5.9 Head and motor window

The case shall have a window on each side to enable the optical head and the motor to access the disk (see figure 11). The dimensions are referenced to a centreline, located at a distance of

$L_{46}$ = 61,0 mm ± 0,2 mm

to the left of reference axis Y.

The width of the head access shall be

$L_{47}$ = 20,00 mm min

$L_{48}$ = 20,00 mm min

and its height shall extend from

$L_{49}$ = 118,2 mm min to

$L_{50}$ = 57,0 mm max

The four inside corners shall be rounded with a radius of

$R_{12}$ = 3,0 mm max

The motor access shall have a diameter of

$D_5$ = 35,0 mm min

and its centre shall be defined by $L_{46}$ and

$L_{51}$ = 43,0 mm ± 0,2 mm

### 10.5.10 Shutter

The case shall have a spring-loaded, unidirectional shutter (see figure 12) with an optional latch, designed to completely cover the head and motor windows when closed. A shutter movement of 41,5 mm minimum shall be sufficient to ensure that the head and motor window is opened to the minimum size specified in 10.5.9. The shutter shall be free to slide in a recessed area of the case in such a way as to ensure that the overall thickness of the case and shutter shall not exceed $L_8$.

The right-hand side of the top of the shutter shall have a lead-in ramp with an angle

$A_2$ = 16° max

The distance from the reference planes P to the nearest side of the ramp shall be

$L_{52}$ = 2,5 mm max

The left hand side of the shutter shall not extend closer than

$L_{52B}$ = 14,0 mm min

to the datum plane.



Copyright International Organization for Standardization
Provided by IHS under license with ISO
No reproduction or networking permitted without license from IHS Not for Resale

### 10.5.11 Slot for shutter opener

The shutter shall have only one slot (see figure 12) in which the shutter opener of the drive can engage to open the shutter. The slot shall be dimensioned as follows:

When the shutter is closed, the vertical edge used to push the shutter open shall be located at a distance of

$$L_{53} = 34{,}5 \text{ mm} \pm 0{,}5 \text{ mm}$$

from reference axis Y on Side B of the case.

The length of the slot shall be

$$L_{54} = 4{,}5 \text{ mm} \pm 0{,}1 \text{ mm}$$

and the angle of the lead-out ramp shall be

$$A_3 = 52{,}5° \pm 7{,}5°$$

The depth of the slot shall be

$$L_{55} = 3{,}5 \text{ mm} \pm 0{,}1 \text{ mm}$$

The width of the slot from the reference plane P of Side B of the case shall be

$$L_{56} = 6{,}0 \text{ mm} \begin{matrix} + 0{,}5 \text{ mm} \\ - 0{,}0 \text{ mm} \end{matrix}$$

If a shutter latch is employed, the distance between the latch and reference plane P of Side B of the case shall be

$$L_{57} = 2{,}5 \text{ mm max}$$

The edges of the case beneath the shutter, upon which the shutter door opening mechanism may slide, shall have a thickness of

$$B_1 = 1{,}0 \text{ mm min}$$

located at

$$B_2 = 0{,}9 \text{ mm max}$$

from plane P (see detail A in figure 12).

The four edges shall also be straight to within

STR (**str**aightness of surface) = 0,2 mm

in both planes for length $C_1$. (Length $C_1$ is defined by the manufacturer's shutter design. See detail in figure 12.)

### 10.5.12 Shutter sensor notch

The shutter sensor notch (see figure 10) is used to ensure that the shutter is fully open after insertion of the optical disk cartridge into the drive. Therefore, the notch shall be exposed only when the shutter is fully open.

The dimensions shall be

$$L_{43} = 3{,}5 \text{ mm} \pm 0{,}2 \text{ mm}$$

$$L_{44} = 71{,}0 \text{ mm} \pm 0{,}3 \text{ mm}$$

and

+ 0,0 mm



Copyright International Organization for Standardization
Provided by IHS under license with ISO
No reproduction or networking permitted without license from IHS Not for Resale

$L_{45}$ = 9,0 mm
- 2,0 mm

The notch shall have a lead-out ramp with an angle

$A_1 = 45° \pm 2°$

### 10.5.13 User label areas

The case shall have the following minimum areas for user labels (see figure 14):

- on Side A and Side B: 35,0 mm x 65,0 mm
- on the bottom side: 6,0 mm x 98,0 mm

These areas shall be recessed by 0,2 mm min. Their positions are specified by the following dimensions and relations between dimensions.

| | |
|---|---|
| $L_{61}$ | = 4,5 mm min |
| $L_{62} - L_{61}$ | = 65,0 mm min |
| $L_{64} - L_{63}$ | = 35,0 mm min |
| $L_{65}$ | = 4,5 mm min |
| $L_{66} - L_{65}$ | = 65,0 mm min |
| $L_{67} + L_{68}$ | = 35,0 mm min |
| $L_8 - L_{71} - L_{72}$ | = 6,0 mm min |
| $L_4 - L_{69} - L_{70}$ | = 98,0 mm min |

## 10.6 Mechanical characteristics

All requirements of this clause shall be met in the operating environment.

### 10.6.1 Materials

The case shall be constructed from any suitable materials such that it meets the requirements of this International Standard.

### 10.6.2 Mass

The mass of the case without the optical disk shall not exceed 150 g.

### 10.6.3 Edge distortion

The cartridge shall meet the requirement of the edge distortion test defined in annex B.

### 10.6.4 Compliance

The cartridge shall meet the requirement of the compliance (flexibility) test defined in annex C. The requirement guarantees that a cartridge can be constrained in the proper plane of operation within the drive.

### 10.6.5 Shutter opening force

The spring force on the shutter shall be such that the force required to open the shutter does not exceed 3N.

It shall be sufficiently strong to close a free-sliding shutter, irrespective of the orientation of the case.

## 10.7 Drop test

The optical disk cartridge shall withstand dropping on each surface and on each corner from a height of 760 mm on to a concrete floor covered with a vinyl layer 2 mm thick. The cartridge shall withstand all such impacts without any functional failure.



Copyright International Organization for Standardization
Provided by IHS under license with ISO
No reproduction or networking permitted without license from IHS Not for Resale

# 11 Dimensional, mechanical and physical characteristics of the disk

## 11.1 General description of the disk

The disk shall consist of two sides.

Each disk side shall consist of a circular substrate with a hub on one face and a recording layer coated on the other face. The recording layer can be protected from environmental influences by a protective layer. The Formatted Zone (see clause 17) of the substrate shall be transparent to allow an optical beam to focus on the recording layer through the substrate.

The two disk sides shall be assembled with the recording layer facing inwards.

The circular hubs are in the centre of the disk. They interact with the spindle of the drive, and provide the radial centring of the clamping force.

## 11.2 Reference axis and plane of the disk

Some dimensions of the hub are referred to a Disk Reference Plane P (see figure 2). The Disk Reference Plane P is different from that described in 10.3 for the cartridge. P is defined by the perfectly flat annular surface of an ideal spindle onto which the clamping zone of the disk is clamped, and which is normal to the axis of rotation of this spindle. This axis A passes through the centre of the centre hole of the hub, and is normal to Disk Reference Plane P.

## 11.3 Dimensions of the disk

The dimensions of the disk shall be measured in the test environment. The dimensions of the disk in an operating environment can be estimated from the dimensions specified in this clause.

The outer diameter of the disk shall be 130,0 mm nominal. The tolerance is determined by the movement of the disk inside the case allowed by 12.3 and 12.4.

The total thickness of the disk outside the hub area shall be 2,40 mm min. and 2,80 mm max.

> Note - Disks that conform to ISO/IEC 10089 and ISO/IEC 15486 are known to exist which have a total thickness of 3,2 mm.

The clamping zone is the area on the disk where the clamping mechanism of the optical drive grips the disk and is defined by $D_6$ and $D_7$.

The clearance zone is the area between the outer diameter of the clamping zone ($D_6$) and the inner diameter of the reflective zone (see clause 17).

The clearance zone shall be excluded from the total thickness requirement, however there shall be no projection from the Disk Reference Plane P in the direction of the optical system of more than 0,2 mm in this zone.

### 11.3.1 Hub dimension

The outer diameter of the hub (see figure 2) shall be

$$D_8 = 25{,}0 \text{ mm} \begin{matrix} +\ 0{,}0 \text{ mm} \\ -\ 0{,}2 \text{ mm} \end{matrix}$$

The height of the hub shall be



--`,,```,,,,````-`-`,,`,,`,`,,`---

Copyright International Organization for Standardization
Provided by IHS under license with ISO
No reproduction or networking permitted without license from IHS Not for Resale

$$h_1 = 2{,}2 \text{ mm} \begin{matrix} +\ 0{,}0 \text{ mm} \\ -\ 0{,}2 \text{ mm} \end{matrix}$$

The diameter of the centre hole of the hub shall be

$$D_9 = 4{,}004 \text{ mm} \begin{matrix} +\ 0{,}012 \text{ mm} \\ -\ 0{,}000 \text{ mm} \end{matrix}$$

The height of the top of the centring hole at diameter $D_9$, measured above the Disk Reference Plane P, shall be

$$h_2 = 1{,}9 \text{ mm min}$$

The centring length at diameter $D_9$ shall be

$$h_3 = 0{,}5 \text{ mm min}$$

The hole shall have a diameter larger than, or equal to, $D_9$ between the centring length and the Disk Reference Plane P. The hole shall extend through the substrate.

There shall be a radius at the rim of the hub at diameter $D_9$ with height

$$h_4 = 0{,}2 \text{ mm} \pm 0{,}1 \text{ mm}$$

At the two surfaces which it intersects, the radius shall be blended to prevent offsets or sharp ridges.

The height of the chamfer at the rim of the hub at diameter $D_8$ shall be

$$h_5 = 0{,}2 \text{ mm} \begin{matrix} +\ 0{,}2 \text{ mm} \\ -\ 0{,}0 \text{ mm} \end{matrix}$$

The angle of the chamfer shall be 45°, or a corresponding full radius shall be used.

The outer diameter of the magnetizable ring shall be

$$D_{10} = 19{,}0 \text{ mm min}$$

The inner diameter of the magnetizable ring shall be

$$D_{11} = 8{,}0 \text{ mm max}$$

This thickness of the magnetizable material shall be

$$h_6 = 0{,}5 \text{ mm min}$$

The position of the top of the magnetizable ring relative to the Disk Reference Plane P shall be

$$h_7 = 2{,}2 \text{ mm} \begin{matrix} +\ 0{,}0 \text{ mm} \\ -\ 0{,}1 \text{ mm} \end{matrix}$$

The outer diameter of the clamping zone shall be

$$D_6 = 35{,}0 \text{ mm min}$$

The inner diameter of the zone shall be

$$D_7 = 27{,}0 \text{ mm max}$$

### 11.4 Mechanical characteristics

All requirements in this clause must be met in the operating environment.



Copyright International Organization for Standardization
Provided by IHS under license with ISO
No reproduction or networking permitted without license from IHS Not for Resale

### 11.4.1 Material

The disk shall be made from any suitable materials such that it meets the requirements of this Standard. The only material properties specified by this International Standard are the magnetic properties of the magnetizable zone in the hub (see 11.3.1) and the optical properties of the substrate in the Formatted Zone (see 11.5).

### 11.4.2 Mass

The mass of the disk shall not exceed 120 g.

### 11.4.3 Moment of inertia

The moment of inertia of the disk relative to axis A shall not exceed 0,22 g·m$^2$.

### 11.4.4 Imbalance

The imbalance of the disk relative to axis A shall not exceed 0,01 g·m.

### 11.4.5 Axial deflection

The axial deflection of the disk is measured as the axial deviation of the recording layer. Thus it comprises the tolerances on the thickness of the substrate, on its index of refraction and the deviation of the entrance surface from the Disk Reference Plane P on each side of the disk. The nominal position of the recording layer with respect to the Disk Reference Plane P on each side of the disk is determined by the nominal thickness of the substrate.

The deviation of any point of the recording layer from its nominal position, in a direction normal to the Disk Reference Plane P, shall not exceed ± 0,19 mm for rotational frequencies of the disk as specified in 9.5. The deviation shall be measured by the optical system defined in clause 9.

### 11.4.6 Axial acceleration

The maximum allowed axial error $e_{max}$ (see annex V) shall not exceed ± 0,7 µm, measured using the Reference Servo for axial tracking of the recording layer. The rotational frequency of the disk shall be as specified in 9.5. The stationary part of the motor is assumed to be motionless (no external disturbances). The measurement shall be made using a servo with the transfer function

$$H_s(i\omega) = \frac{1}{3} \times \left( \frac{\omega_0}{i\omega} \right)^2 \times \frac{1 + \frac{3i\alpha}{\omega_0}}{1 + \frac{i\omega}{3\omega_0}}$$

where

$\omega = 2\pi f$

$\omega_0 / 2\pi = 1550$ Hz

$i = \sqrt{-1}$

or any other servo with $|1+H|$ within 20% of $|1+H_S|$ in the bandwidth of 50 Hz to 170 kHz. Thus, the disk shall not require an acceleration of more than 22 m/s$^2$ at low frequencies from the servo motor of the Reference Servo.

### 11.4.7 Radial runout

The radial runout of the tracks in the recording layer in the Information zone is measured as seen by the optical head of the Reference Drive. Thus it includes the distance between the axis of rotation of the spindle and reference axis A, the tolerances on the dimensions between axis A and the location of the track, and effects of non-uniformity's in the index of refraction.



Copyright International Organization for Standardization
Provided by IHS under license with ISO
No reproduction or networking permitted without license from IHS Not for Resale

The difference between the maximum and the minimum distance of any track from the axis of rotation, measured along a fixed radial line over one physical track of the disk, shall not exceed 50 μm as measured by the optical system under conditions of a hub mounted on a perfect sized test fixture shaft, for rotational frequencies of the disk as specified in 9.5.

#### 11.4.8 Radial acceleration

The maximum allowed radial error $e_{max}$ (see annex V) shall not exceed ± 0,09 μm, measured using the Reference Servo for radial tracking of the tracks. The rotational frequency of the disk shall be as specified in 9.5. The stationary part of the motor is assumed to be motionless (no external disturbances). The measurement shall be made using a servo with the transfer function

$$H_s(i\omega) = \frac{1}{3} \times \left( \frac{\omega_0}{i\omega} \right)^2 \times \frac{1 + \frac{3i\omega}{\omega_0}}{1 + \frac{i\omega}{3\omega_0}}$$

where

$\omega = 2\pi f$

$\omega_0 / 2\pi = 2\,340$ Hz

$i = \sqrt{-1}$

or any other servo with $|1+H|$ within 20% of $|1+H_s|$ in the bandwidth of 50 Hz to 170 kHz. Thus, the disk shall not require an acceleration of more than 6,5 m/s$^2$ at low frequencies from the servo motor of the Reference Servo.

#### 11.4.9 Tilt

The tilt angle, defined as the angle which the normal to the entrance surface, averaged over a circular area of 1 mm diameter, makes with the normal to the Disk Reference Plane P, shall not exceed 2,8 mrad.

### 11.5 Optical characteristics

#### 11.5.1 Index of refraction

Within the Formatted Zone (see clause 17) the index of refraction of the substrate shall be within the range from 1,46 to 1,60.

#### 11.5.2 Thickness

The thickness of the substrate from the entrance surface to the recording layer, within the Formatted Zone shall be:

$$0{,}509\,3 \times \frac{n^3}{n^2 - 1} \times \frac{n^2 + 0{,}265\,0}{n^2 + 0{,}592\,9}\ \text{mm} \pm 0{,}05\ \text{mm}$$

where $n$ is the index of refraction.

#### 11.5.3 Birefringence

The effect of the birefringence of the substrate is included in the measurement of the imbalance of the magneto optical signal in Channel 2 of the Reference Drive (see 26.2)

#### 11.5.4 Vertical Birefringence

The principal vertical birefringence value shall be contained as follows:

$$0 \le |N_p - N_z| \le 500 \times 10^{-6}$$



Copyright International Organization for Standardization
Provided by IHS under license with ISO
No reproduction or networking permitted without license from IHS Not for Resale

where $N_p$ is the index of refraction along any direction in the plane of the disk and $N_z$ is the index of refraction normal to the plane of the disk. (See annex X).

### 11.5.5 Reflectance

#### 11.5.5.1 General

The reflectance $R$ is the value of the reflectance in-groove of an unrecorded and grooved area of the User Zone, measured through the substrate and does not include the reflectance of the entrance surface.

The nominal value $R$ of the reflectance shall be specified by the manufacturer

- in byte 3 of the Control Track PEP Zone (see 17.3.2.1.4), and
- in byte 19 of the Control Track SFP Zone (see 17.4.2).

#### 11.5.5.2 Measured value

The measured value $R_m$ of the reflectance shall be measured under the conditions a) to f) of 9.2 and those of 20.2.2 using the split photo detector $(I_1+I_2)_{IG}$.

Measurements shall be made in the User Zone in any track without embossed data fields.

#### 11.5.5.3 Requirement

The value of $R$ at the standard wavelength specified in 9.2 shall lie within the range of 0,10 to 0,25 for Type R/W, DOW, P-ROM, P-DOW, WO or WO-DOW disks and shall be not less than 0,35 for Type O-ROM disks.

At any point in the User Zone, the measured reflectance $R_m$ shall meet the following requirement.

$$R\,(1 - 0{,}15) \leq (R_{mmax} + R_{mmin})/2 \leq R\,(1 + 0{,}15)$$

This requirement specifies the acceptable range for $R_m$, for all disks within the same value $R$. Additionally, the variation of $R_m$ shall meet the requirement

$$(R_{mmax} - R_{mmin}) / (R_{mmax} + R_{mmin}) \leq 0{,}13$$

where

$R_{mmax}$ is the maximum value of measured reflectance in the User Zone, and

$R_{mmin}$ is the minimum value of measured reflectance in the User Zone.

## 12 Interface between cartridge and drive

### 12.1 Clamping method

When the cartridge is inserted into the drive, the shutter of the case is opened and the drive spindle engages the disk. The disk is held against the spindle by an axial clamping force, provided by the magnetizable material in the hub and the magnets in the spindle. The radial positioning of the disk is provided by the centering of the axis of the spindle in the centre hole of the hub. A turntable of the spindle shall support the disk in its clamping zone, determining the axial position of the disk in the case.

### 12.2 Clamping force

The clamping force exerted by the spindle shall be less than 14 N.

The adsorbent force measured by the test device specified in annex D shall be in the range of 8,0 N to 12,0 N.

### 12.3 Capture cylinder

The capture cylinder (see figure 13) is defined as the volume in which the spindle can expect the centre of the hole of the hub to be at the maximum height of the hub, just prior to capture. The size of the cylinder limits the allowable play of the disk inside its cavity in the case. This cylinder is referred to



Copyright International Organization for Standardization
Provided by IHS under license with ISO
No reproduction or networking permitted without license from IHS Not for Resale

perfectly located and perfectly sized alignment and location pins in the drive, and includes tolerances of dimensions of the case and the disk between the two pins mentioned and the centre of the hub. The bottom of the cylinder is parallel to the Disk Reference Plane P, and shall be located at a distance of

$$L_{58} = 0{,}5 \text{ mm min.}$$

above the Disk Reference Plane P of Side B of the case when Side A of the disk is to be used. The top of the cylinder shall be located at a distance of

$$L_{59} = 4{,}3 \text{ mm max.}$$

above the same Disk Reference Plane P, i.e. that of Side B. The diameter of the cylinder shall be

$$D_{12} = 3{,}0 \text{ mm max.}$$

Its centre shall be defined by the nominal values of $L_{46}$ and $L_{51}$.

### 12.4 Disk position in the operating condition

When the disk is in the operating condition (see figure 13) within the drive, the position of the active recording layer shall be

$$L_{60} = 5{,}35 \text{ mm} \pm 0{,}15 \text{ mm}$$

above the Disk Reference Plane P of that side of the case that faces the optical system. Moreover, the torque to be exerted on the disk in order to maintain a rotational frequency of 50 Hz shall not exceed 0,01 N·m, when the axis of rotation is within a circle of diameter

$$D_{13} = 0{,}2 \text{ mm max.}$$

and a centre given by the nominal values of $L_{46}$ and $L_{51}$.



Copyright International Organization for Standardization
Provided by IHS under license with ISO
No reproduction or networking permitted without license from IHS Not for Resale

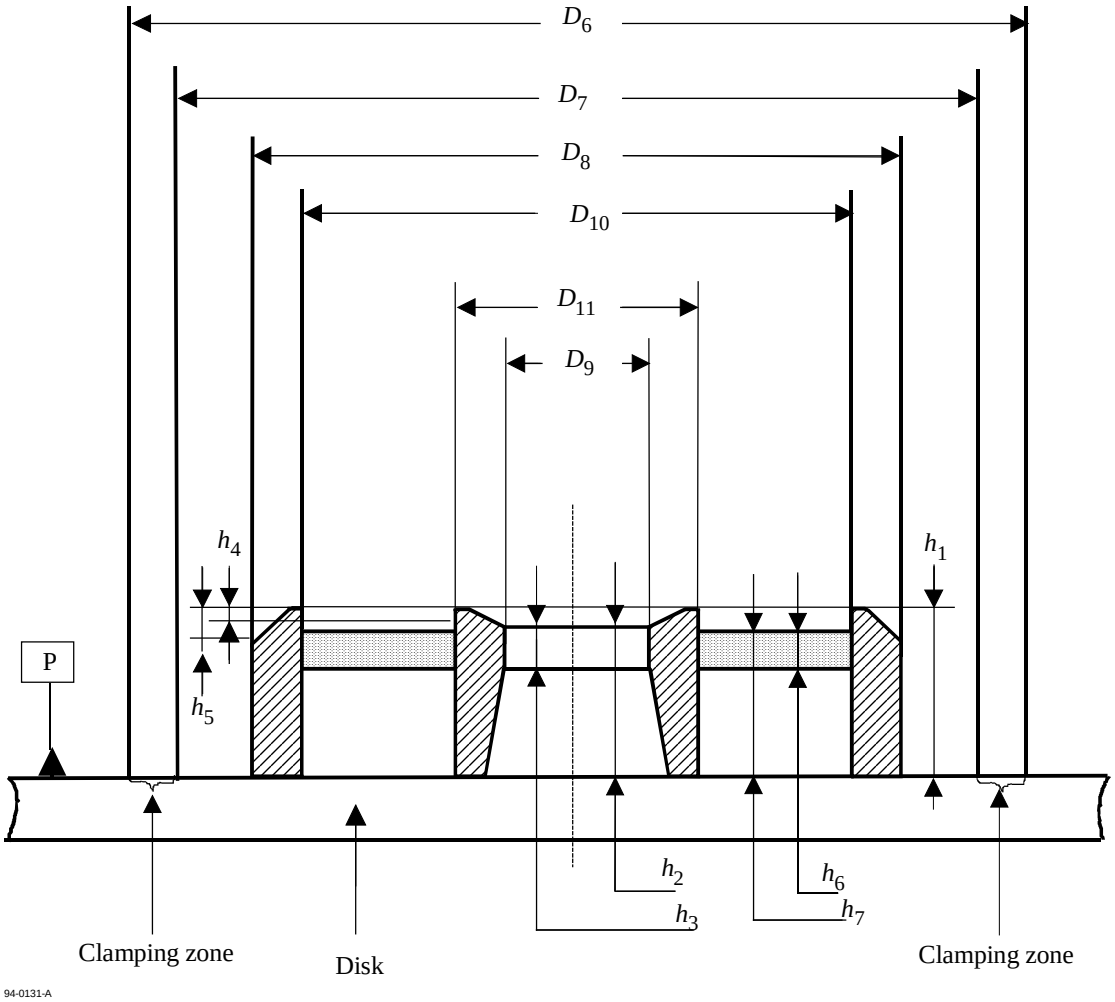


**Figure 2 - Hub dimensions**



--`,,```,,,,````-`-`,,`,,`,`,,`---

Copyright International Organization for Standardization
Provided by IHS under license with ISO
No reproduction or networking permitted without license from IHS
Not for Resale

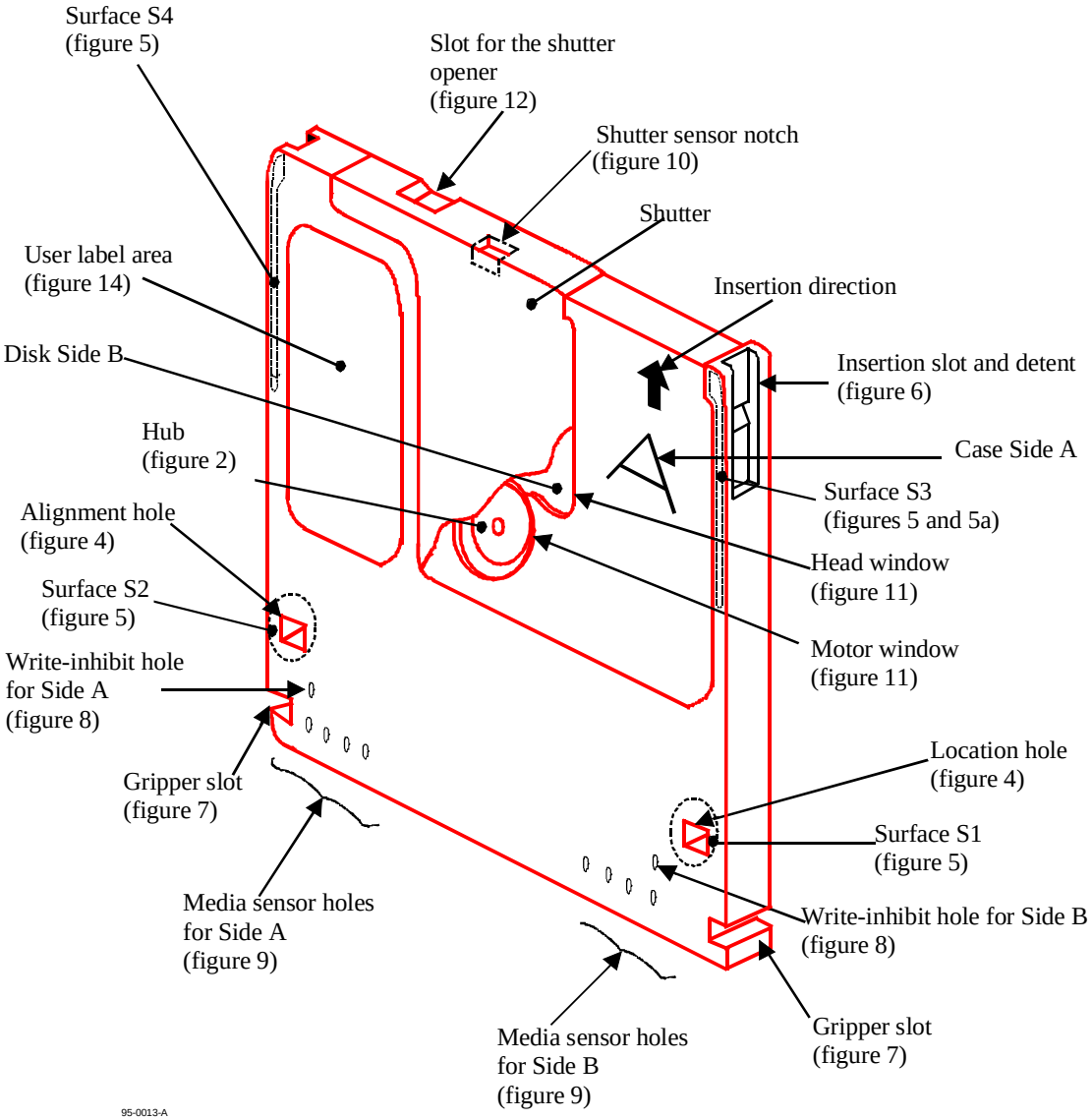


**Figure 3 - Case**



--`,,```,,,,````-`-`,,`,,`,`,,`---

Copyright International Organization for Standardization
Provided by IHS under license with ISO
No reproduction or networking permitted without license from IHS Not for Resale

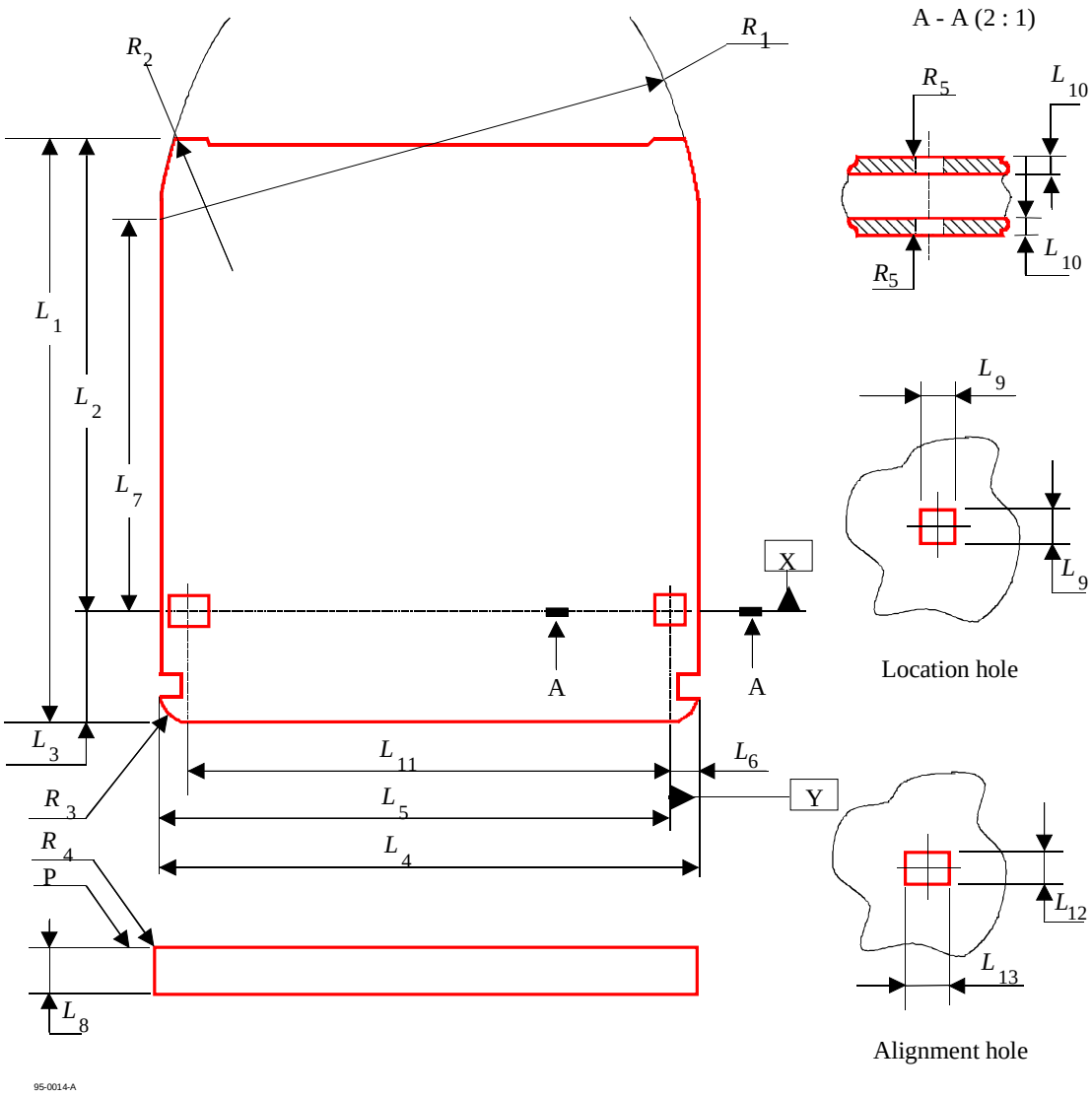


**Figure 4 - Overall dimensions and reference axes**



Copyright International Organization for Standardization
Provided by IHS under license with ISO
No reproduction or networking permitted without license from IHS
Not for Resale

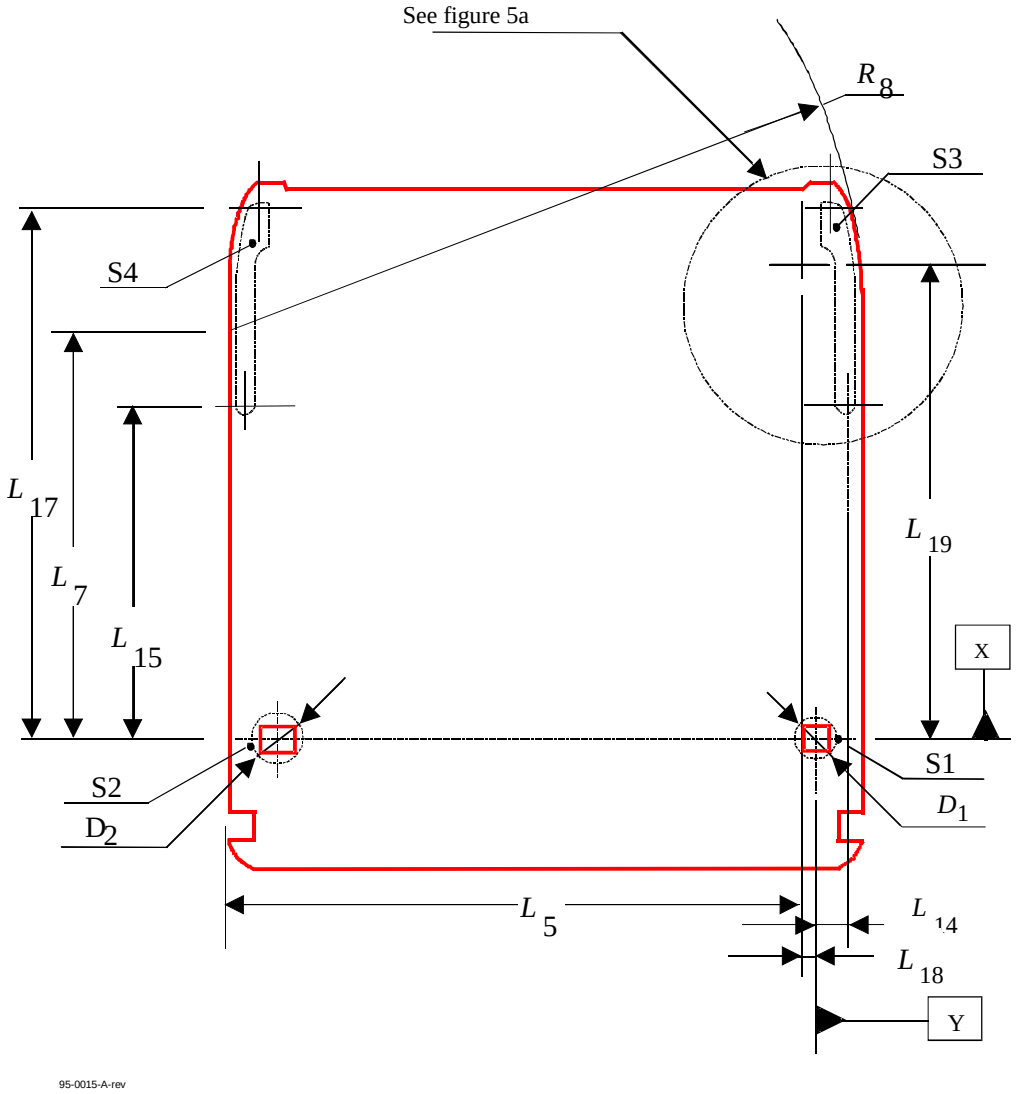


**Figure 5 - Surfaces S1, S2, S3 and S4 of the reference plane P**



--`,,```,,,,````-`-`,,`,,`,`,,`---

Copyright International Organization for Standardization
Provided by IHS under license with ISO
No reproduction or networking permitted without license from IHS
Not for Resale

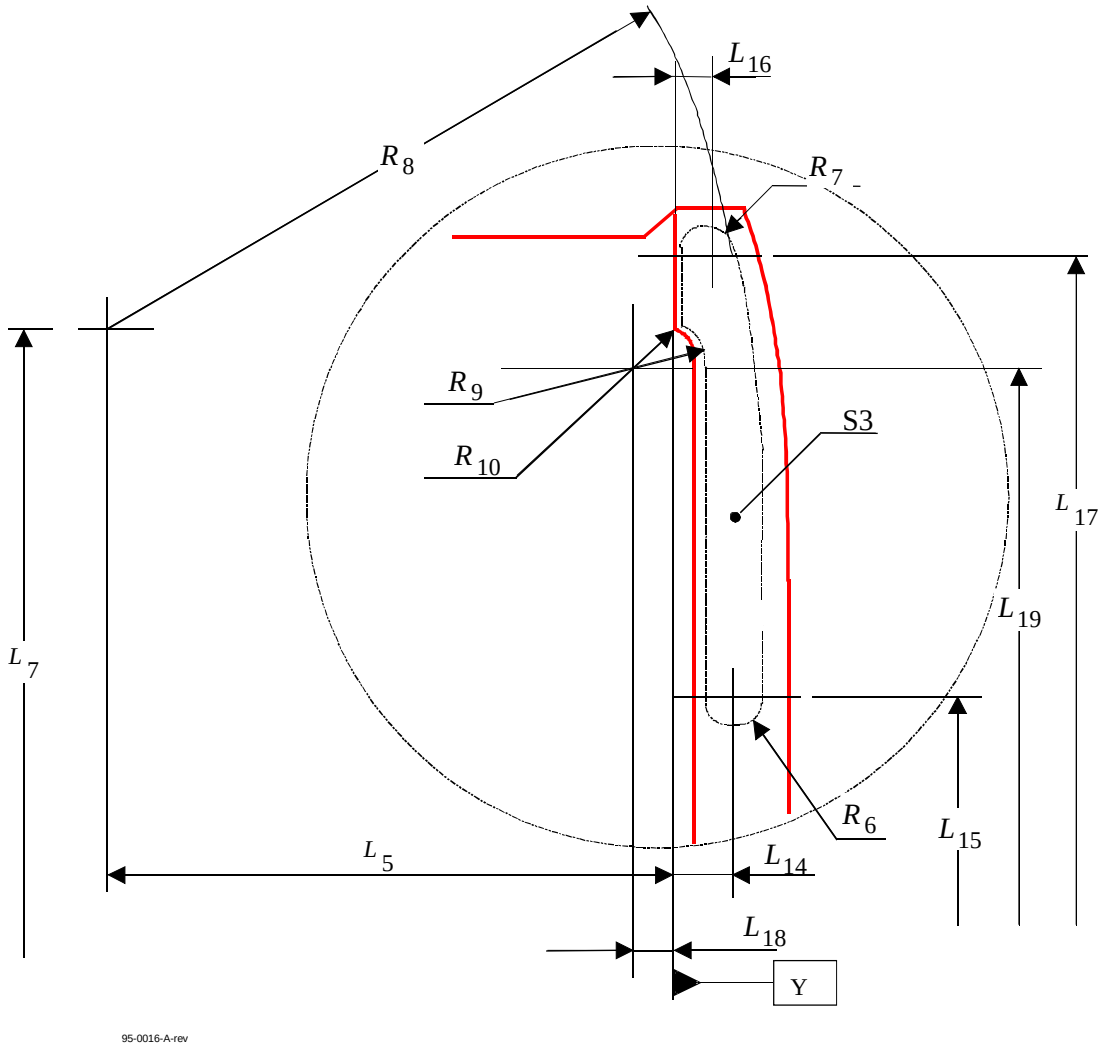


**Figure 5a - Detail of surface S3**



Copyright International Organization for Standardization
Provided by IHS under license with ISO
No reproduction or networking permitted without license from IHS
Not for Resale

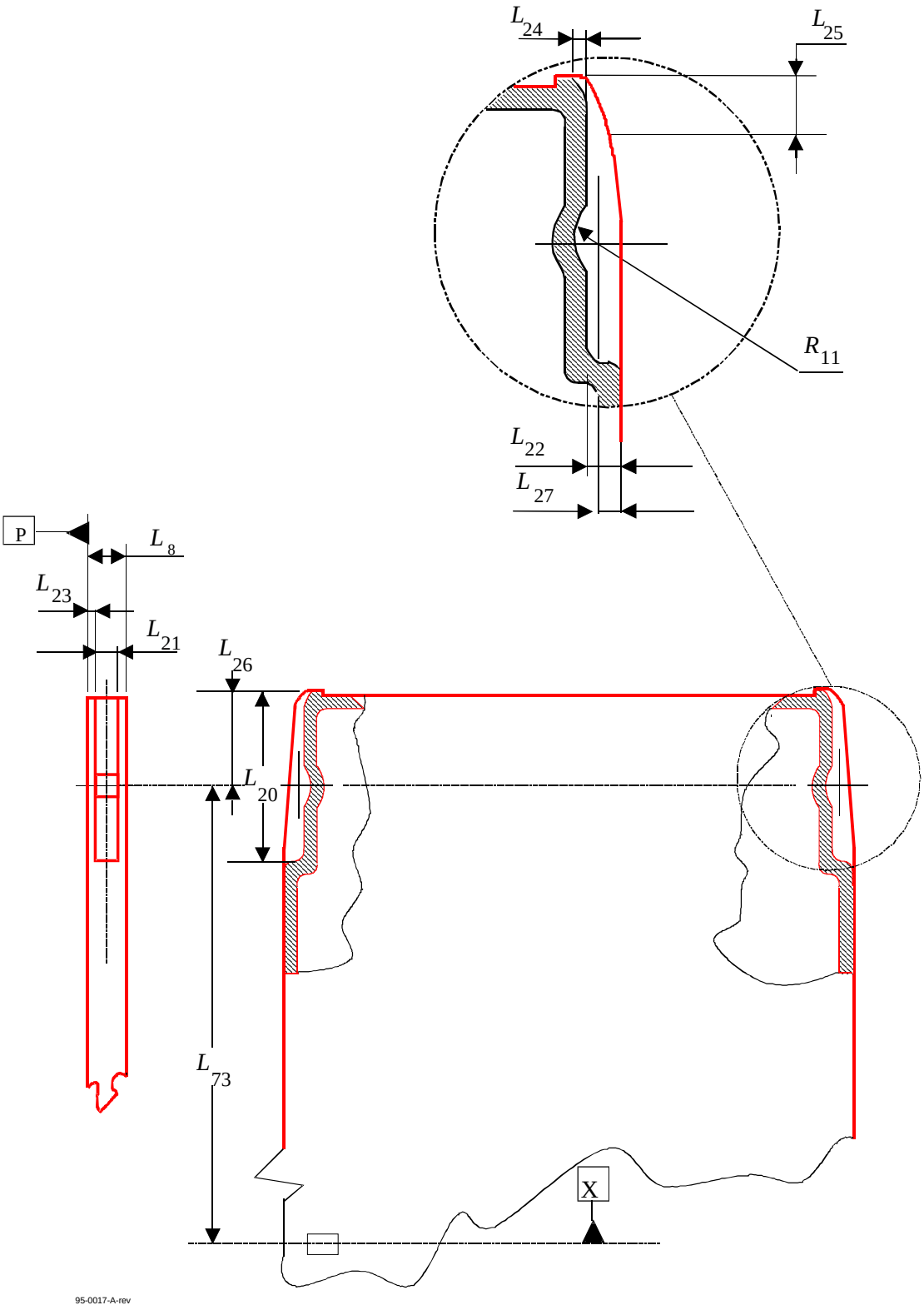


**Figure 6 - Insertion slot and detent**



Copyright International Organization for Standardization
Provided by IHS under license with ISO
No reproduction or networking permitted without license from IHS
Not for Resale

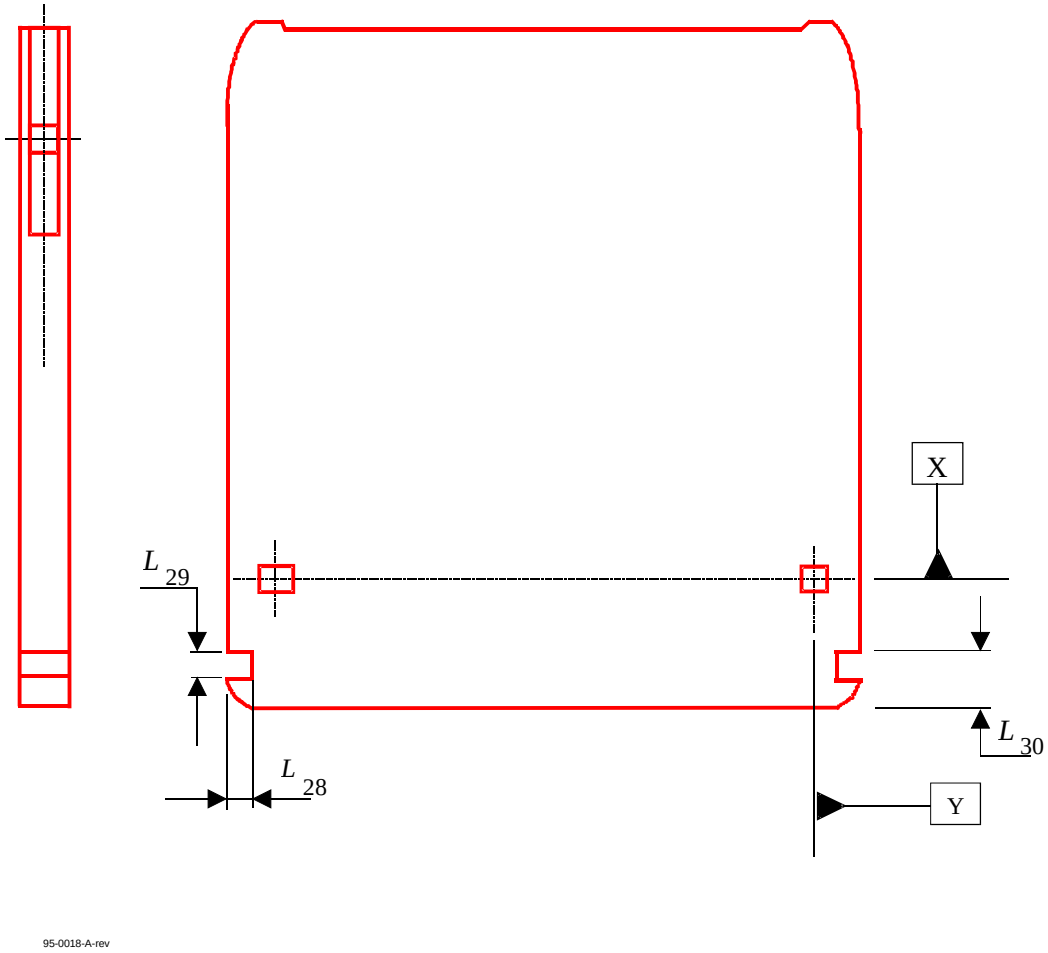


**Figure 7 - Gripper slots**



Copyright International Organization for Standardization
Provided by IHS under license with ISO
No reproduction or networking permitted without license from IHS
Not for Resale

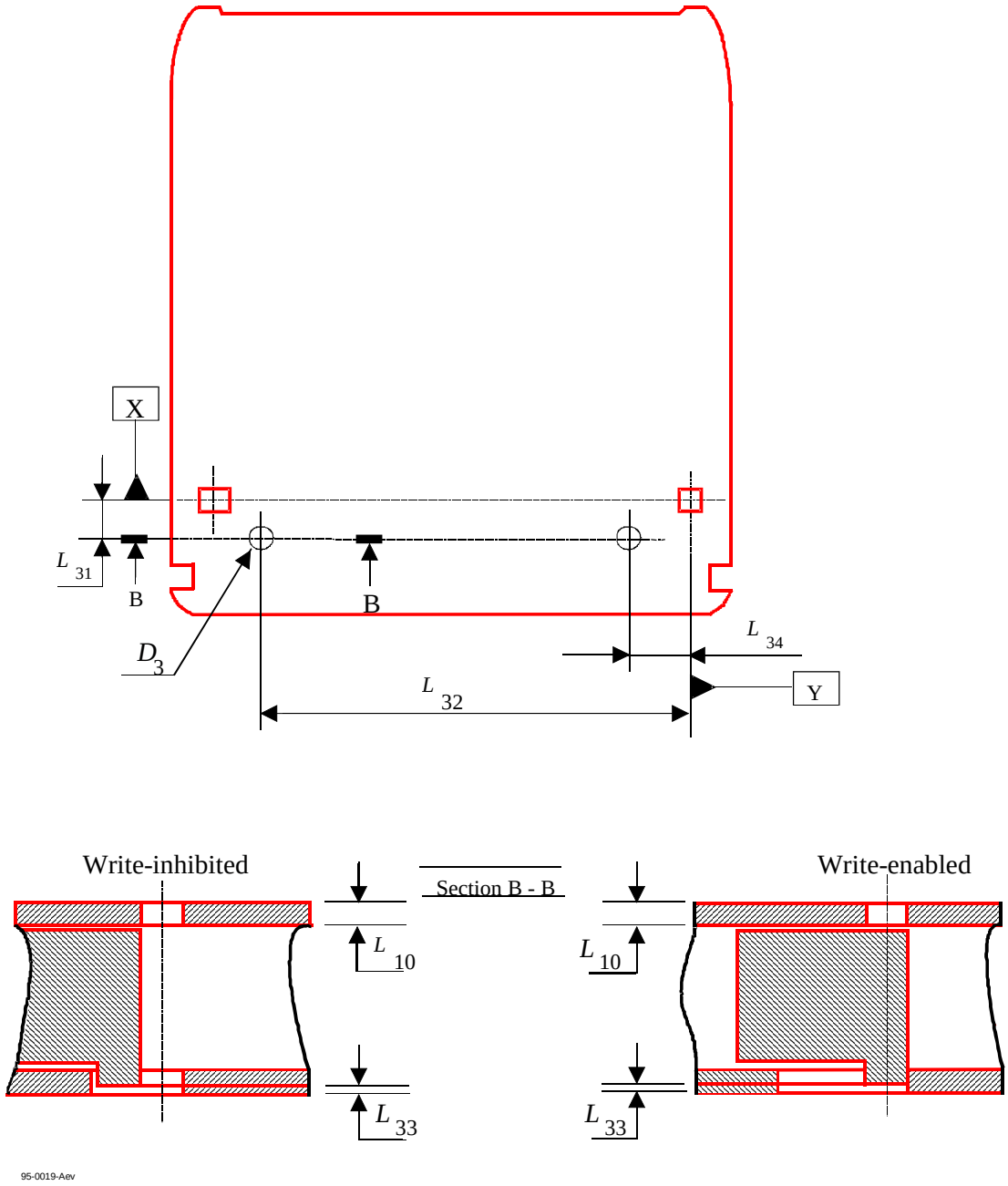


**Figure 8 - Write-Inhibit holes**



Copyright International Organization for Standardization
Provided by IHS under license with ISO
No reproduction or networking permitted without license from IHS
Not for Resale

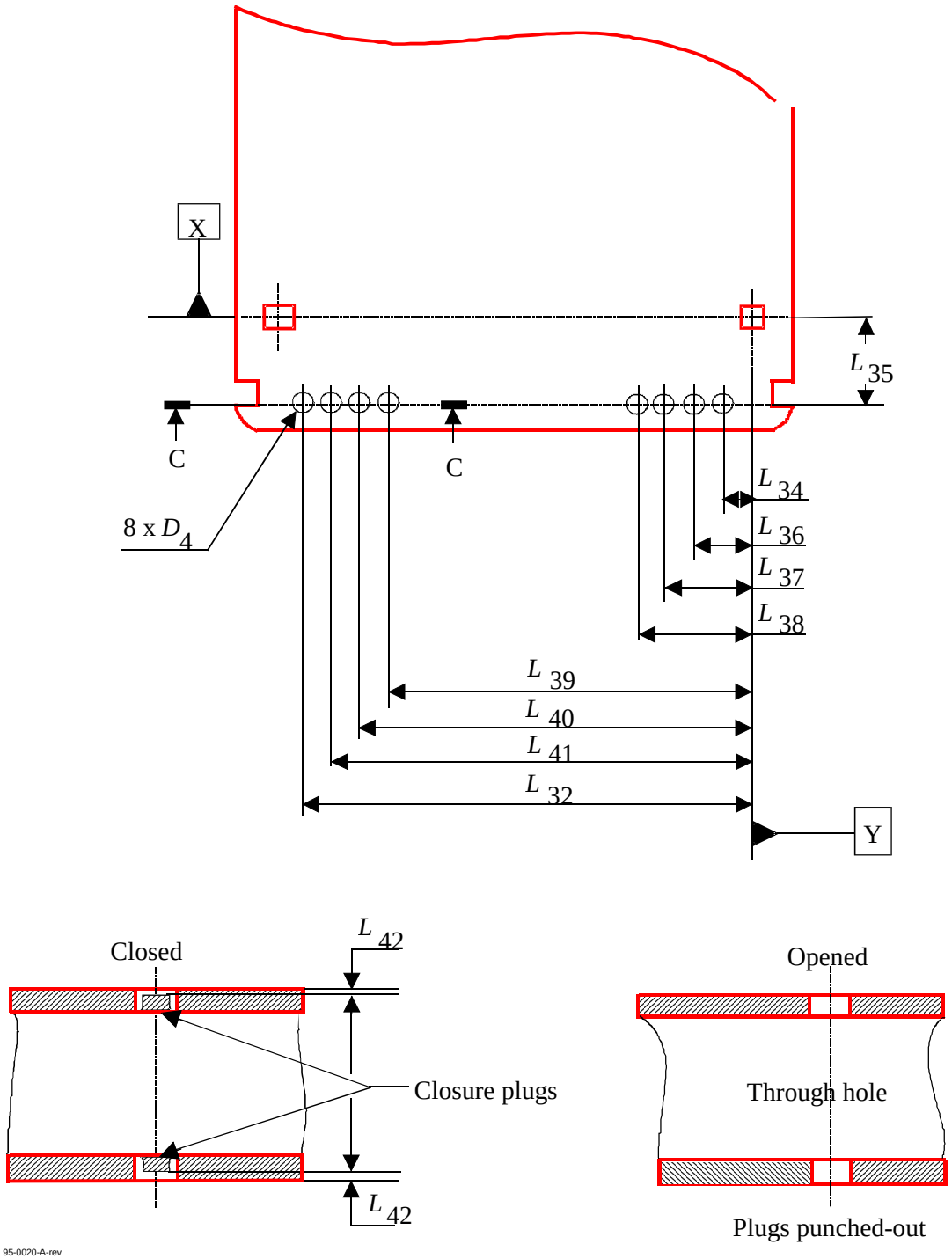


**Figure 9 - Media ID sensor holes**



Copyright International Organization for Standardization
Provided by IHS under license with ISO
No reproduction or networking permitted without license from IHS
Not for Resale

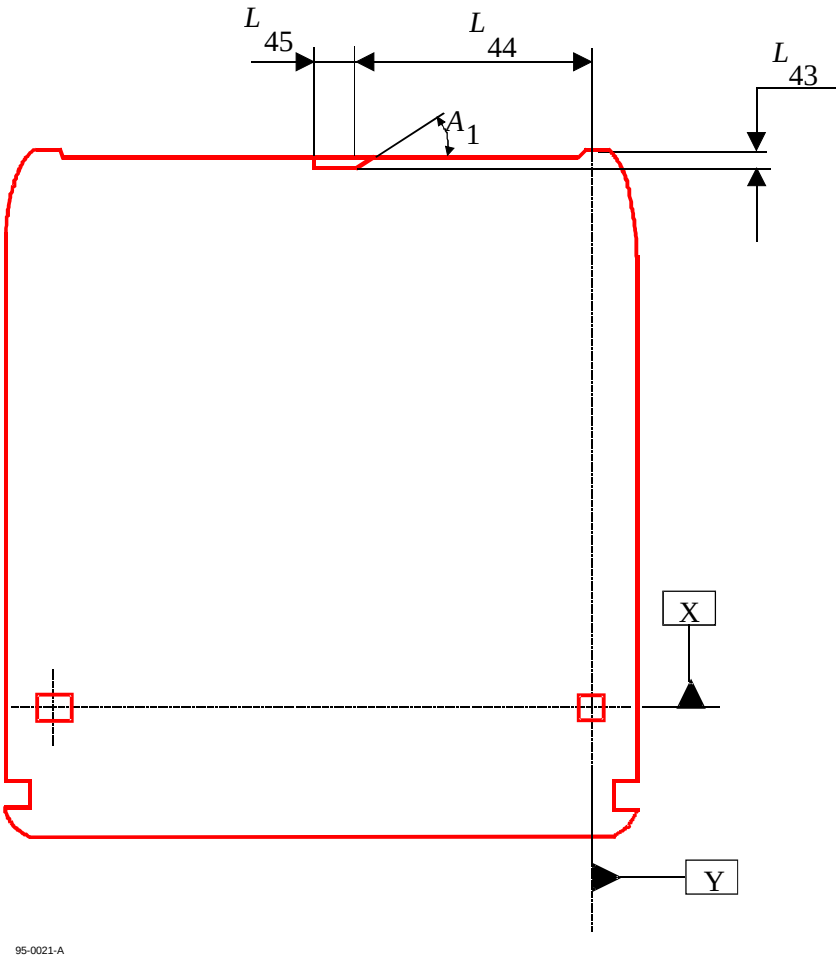


**Figure 10 - Shutter sensor notch viewed from Side A**



Copyright International Organization for Standardization
Provided by IHS under license with ISO
No reproduction or networking permitted without license from IHS
Not for Resale

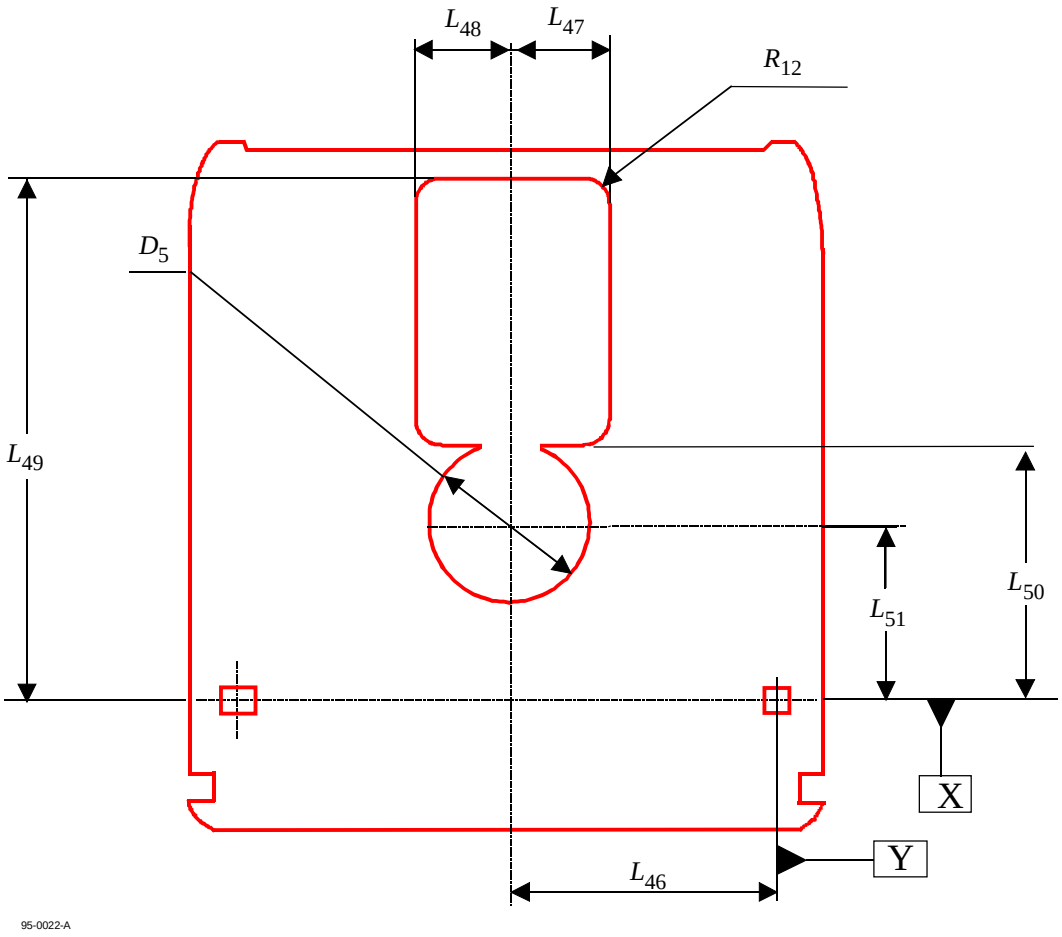


**Figure 11 - Head and motor window**



Copyright International Organization for Standardization
Provided by IHS under license with ISO
No reproduction or networking permitted without license from IHS
Not for Resale

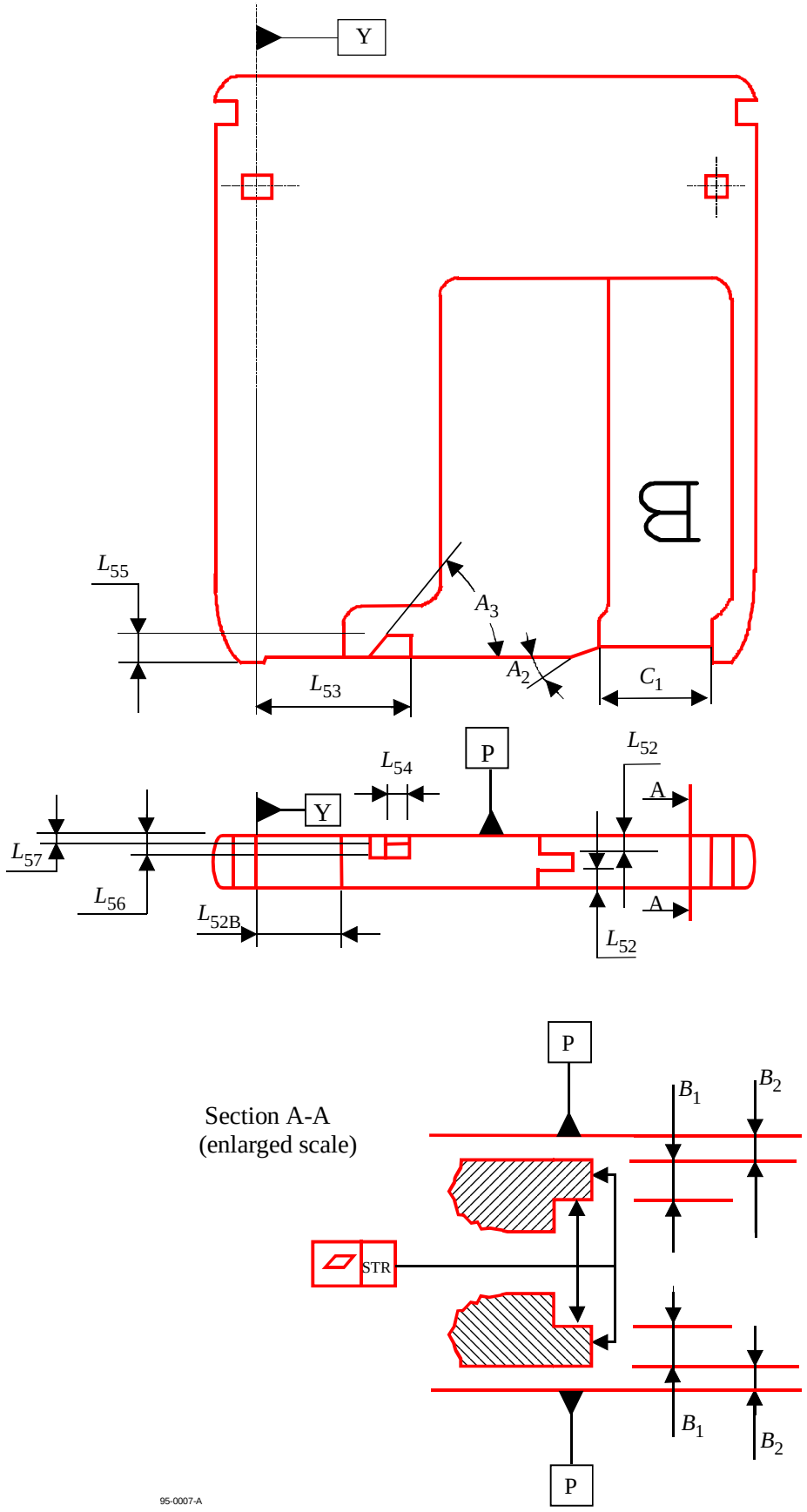


**Figure 12 - Shutter opening features**



Copyright International Organization for Standardization
Provided by IHS under license with ISO
No reproduction or networking permitted without license from IHS
Not for Resale

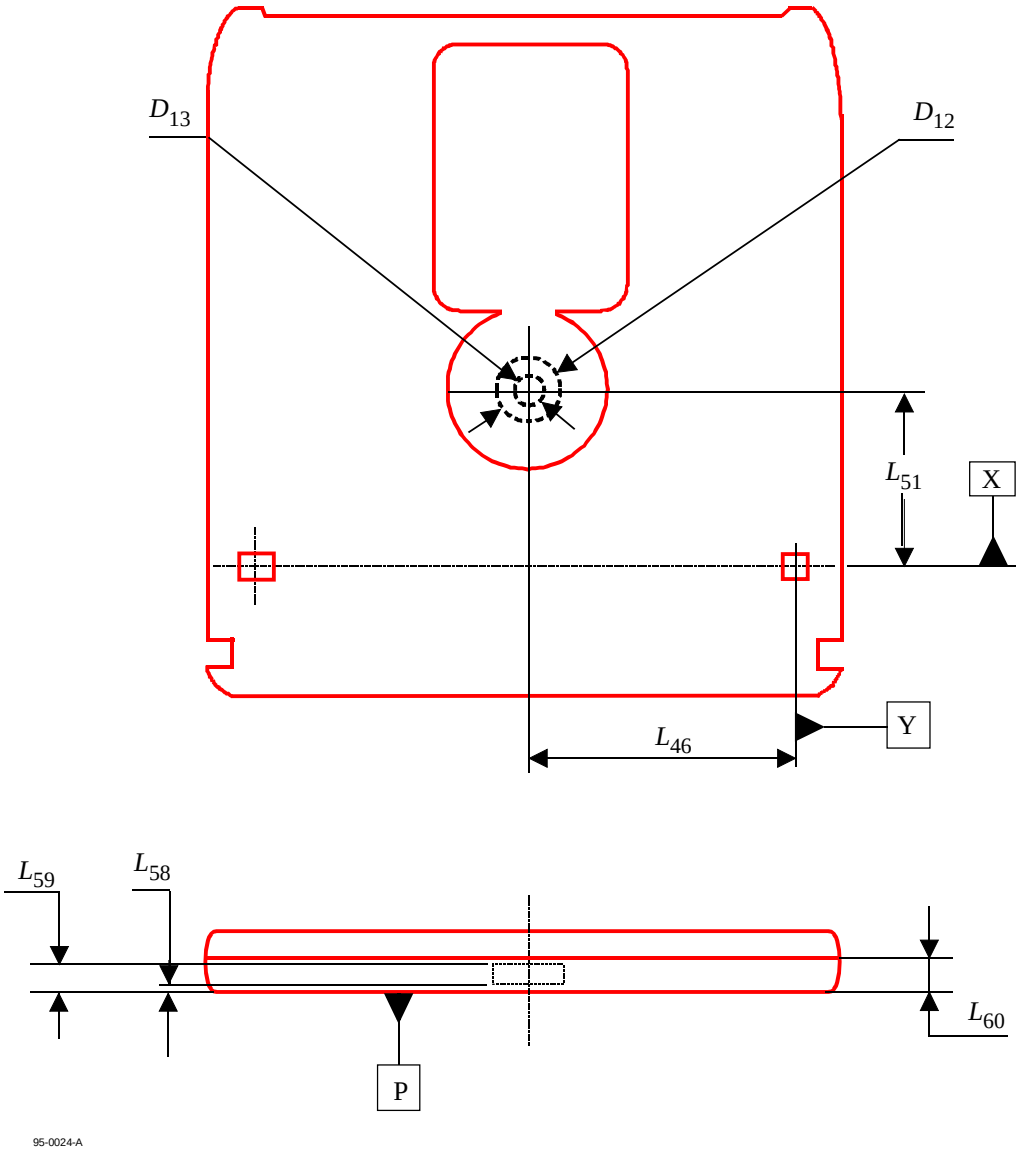


**Figure 13 - Capture cylinder**



Copyright International Organization for Standardization
Provided by IHS under license with ISO
No reproduction or networking permitted without license from IHS
Not for Resale

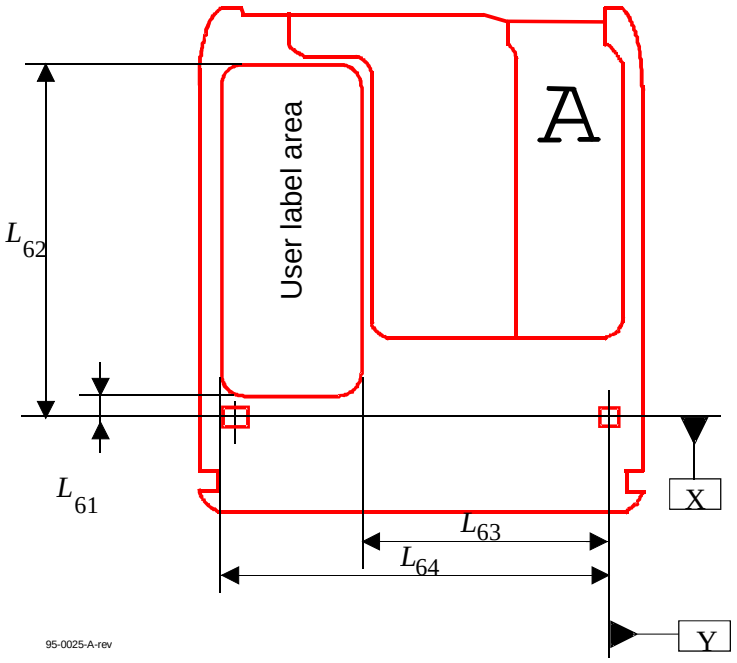


**Figure 14a - User label area on Side A**

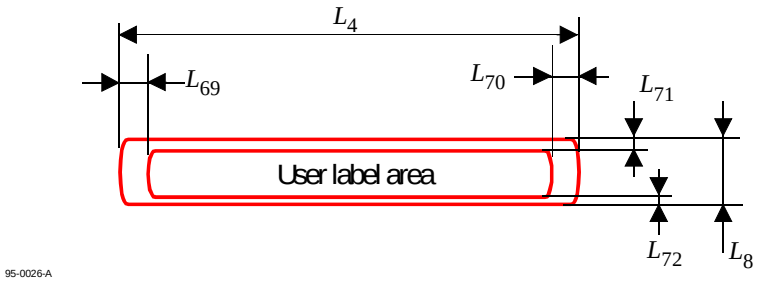


**Figure 14b - User label area on bottom surface**

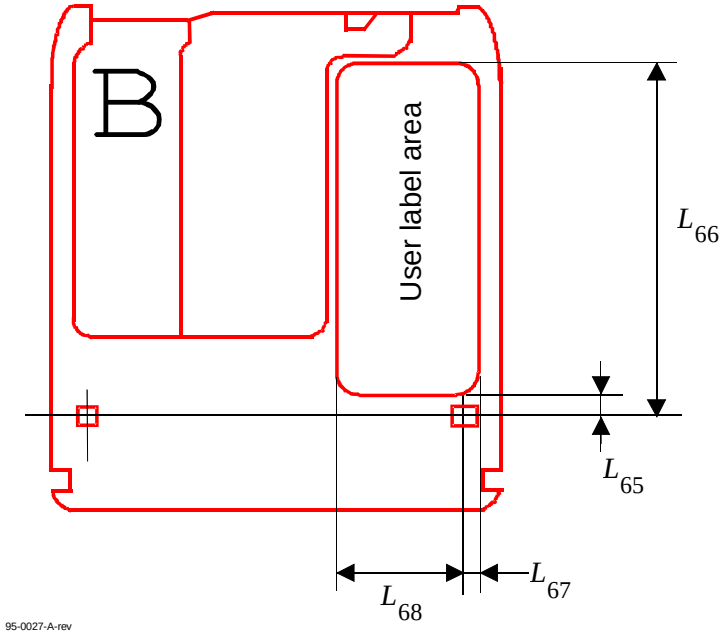


**Figure 14c - User label area on Side B**



Copyright International Organization for Standardization
Provided by IHS under license with ISO
No reproduction or networking permitted without license from IHS
Not for Resale

# Section 3 - Format of information

## 13 Track geometry

### 13.1 Track shape

The Formatted Zone shall contain tracks intended for the continuous servo tracking method (see table 4).

A track consists of a land-groove-land combination, where each land is shared with a neighboring track. A groove is a trench-like feature, the bottom of which is located nearer to the entrance surface than the land. The centre of the track, i.e. where the recording is made, is the centre of the groove. The lands shall be continuous. Grooves shall occur only in areas without embossed Headers and embossed Recording Fields. The shape of the land is determined by the requirements in clause 21.

This International Standard distinguishes between physical and logical tracks. A physical track forms a $360^{o}$ turn of a continuous spiral. A logical track is a portion of a physical track containing a defined number of consecutive sectors (see 14.2).

### 13.2 Direction of track spiral

The track shall spiral inward from the outer diameter to the inner diameter.

### 13.3 Track pitch

The track pitch is the distance between adjacent track centrelines, measured in a radial direction. It shall be 0,85 µm ± 0,05 µm except in the Control Track PEP Zone. The width of a group of bands corresponding to 35 294 physical tracks shall be 30,00 mm ± 0,10 mm.

### 13.4 Logical track number

Each logical track shall be identified by a logical track number (see 15.5). Unless otherwise stated all track numbers refer to logical tracks only.

Track 0 shall be located at radius 62,10 mm ± 0,10 mm for 2 048-byte sectors and 62,00 mm ± 0,10 mm for 1 024-byte and 512-byte sectors.

The logical track numbers of logical tracks located at radii smaller than that of track 0 shall be increased by 1 for each track.

The logical track numbers of logical tracks located at radii larger than that of track 0 shall be negative, and decrease by 1 for each track. Their value is given in TWO's complement, thus track -1 is indicated by (3FFFF).

### 13.5 Physical track number

In cases where track numbers refer to physical tracks this is clearly stated.

Physical track 0 shall begin with sector 0 of logical track 0.

The track numbers of physical tracks located at radii smaller than that of physical track 0 shall be increased by 1 for each physical track.

The track numbers of physical tracks located at radii larger than that of physical track 0 shall be negative, and decrease by 1 for each physical track.

## 14 Track format

### 14.1 Physical track layout

All sectors on the disk shall be the same size.

For disks with 2 048-byte sectors, on each physical track there shall be 22 to 45 sectors. Each sector shall comprise 2 635 bytes. A byte is represented on the disk by 12 Channel bits. Hence, the length of



Copyright International Organization for Standardization
Provided by IHS under license with ISO
No reproduction or networking permitted without license from IHS Not for Resale

one Channel bit is determined by the requirement that there are (22 to 45) x 2 635 x 12 = 695 640 to 1 422 900 Channel bits on a physical track. The sectors shall be equally spaced over a physical track in such a way that the distance between the first Channel bit of a sector and the first Channel bit of the next sector shall be 31 620 Channel bits ± 5 Channel bits. At the rotational speed of 50 Hz, the period T of a Channel bit equals

$$T = \frac{10^9}{50 \times (695\ 640 \text{ to } 1\ 422\ 900)} \text{ ns} = 28{,}8 \text{ ns to } 14{,}1 \text{ ns}$$

For disks with 1 024-byte sectors, on each physical track there shall be 41 to 85 sectors. Each sector shall comprise 1 416 bytes. A byte is represented on the disk by 12 Channel bits. Hence, the length of one Channel bit is determined by the requirement that there are (41 to 85) x 1 416 x 12 = 696 672 to 1 444 320 Channel bits on a physical track. The sectors shall be equally spaced over a physical track in such a way that the distance between the first Channel bit of a sector and the first Channel bit of the next sector shall be 16 992 Channel bits ± 5 Channel bits. At the rotational speed of 50 Hz, the period T of a Channel bit equals

$$T = \frac{10^9}{50 \times (696\ 672 \text{ to } 1\ 444\ 320)} \text{ ns} = 28{,}7 \text{ ns to } 13{,}8 \text{ ns}$$

For disks with 512-byte sectors, on each physical track there shall be 70 to 144 sectors. Each sector shall comprise 826 bytes. A byte is represented on the disk by 12 Channel bits. Hence, the length of one Channel bit is determined by the requirement that there are (70 to 144) x 826 x 12 = 693 840 to 1 427 328 Channel bits on a physical track. The sectors shall be equally spaced over a physical track in such a way that the distance between the first Channel bit of a sector and the first Channel bit of the next sector shall be 9 912 Channel bits ± 5 Channel bits. At the rotational speed of 50 Hz, the period T of a Channel bit equals

$$T = \frac{10^9}{50 \times (693\ 840 \text{ to } 1\ 427\ 328)} \text{ ns} = 28{,}8 \text{ ns to } 14{,}0 \text{ ns}$$

### 14.2 Logical track layout

On each logical track there shall be 7/17/31 sectors.

### 14.3 Radial alignment

The Headers of the sectors in each band shall be radially aligned in such a way that the distance between the first Channel bit of sectors in adjacent physical tracks shall be less than 5 Channel bits.

The Headers of the first sector in all bands shall be radially aligned in such a way that the distance between the first Channel bit of the first sectors of each band shall be less than 120 Channel bits.

### 14.4 Sector number

The sectors of a logical track shall be numbered consecutively from 0 to 6/16/30.

## 15 Sector format

### 15.1 Sector layout

Sectors shall have one of the three layouts shown in figures 15, 16 and 17 depending on the number of user bytes in the Data field. The number of user bytes per sector is specified by byte 1 of each of the Control Track Zones. The pre-formatted header area of 64 bytes, Transition Area (TA1) area of 1 byte and the ALPC and Gap area of 17 bytes are the same for three sector formats.

On the disk 8-bit bytes shall be represented by 12 Channel bits (see clause 16).

In figure 15, figure 16 and figure 17 the numbers below the fields indicate the number of bytes in each field.



--`,,```,,,,````-`-`,,`,,`,`,,`---
Copyright International Organization for Standardization
Provided by IHS under license with ISO
No reproduction or networking permitted without license from IHS Not for Resale

| SM | $VFO_1$ | AM | $ID_1$ | $VFO_2$ | AM | $ID_2$ | $PA_1$ |
|---|---|---|---|---|---|---|---|
| 8 | 26 | 1 | 5 | 16 | 1 | 5 | 2 |

**Pre-formatted Header**

| Gap | Flag | Gap | ALPC |
|---|---|---|---|
| 4 | 5 | 2 | 6 |

**ALPC and Gaps**

| Pre-formatted Header | $TA_1$ | ALPC, Gaps | $VFO_3$ | Sync | Data field | $PA_2$ | Buffer | $TA_2$ |
|---|---|---|---|---|---|---|---|---|
| 64 | 1 | 17 | 27 | 4 | 2 498<br>User Data, SWF, CRC, Resync | 2 | 21 | 1 |

**Figure 15 - Sector format for 2 048 user bytes**

| SM | $VFO_1$ | AM | $ID_1$ | $VFO_2$ | AM | $ID_2$ | $PA_1$ |
|---|---|---|---|---|---|---|---|
| 8 | 26 | 1 | 5 | 16 | 1 | 5 | 2 |

**Pre-formatted Header**

| Gap | Flag | Gap | ALPC |
|---|---|---|---|
| 4 | 5 | 2 | 6 |

**ALPC and Gaps**

| Pre-formatted Header | $TA_1$ | ALPC, Gaps | $VFO_3$ | Sync | Data field | $PA_2$ | Buffer | $TA_2$ |
|---|---|---|---|---|---|---|---|---|
| 64 | 1 | 17 | 27 | 4 | 1 278<br>(User Data, SWF, CRC, Resync) | 2 | 22 | 1 |

**Figure 16 - Sector format for 1 024 user bytes**



--`,,```,,,,````-`-`,,`,,`,`,,`---

Copyright International Organization for Standardization
Provided by IHS under license with ISO
No reproduction or networking permitted without license from IHS Not for Resale

| SM | $VFO_1$ | AM | $ID_1$ | $VFO_2$ | AM | $ID_2$ | $PA_1$ |
|---|---|---|---|---|---|---|---|
| 8 | 26 | 1 | 5 | 16 | 1 | 5 | 2 |

**Pre-formatted Header**

| Gap | Flag | Gap | ALPC |
|---|---|---|---|
| 4 | 5 | 2 | 6 |

**ALPC and Gaps**

| Pre-formatted Header | $TA_1$ | ALPC, Gaps | $VFO_3$ | Sync | Data field | $PA_2$ | Buffer | $TA_2$ |
|---|---|---|---|---|---|---|---|---|
| 64 | 1 | 17 | 27 | 4 | 690<br>(User Data, SWF, CRC, Resync) | 2 | 20 | 1 |

**Figure 17 - Sector format for 512 user bytes**

### 15.2 Sector Mark

The Sector Mark shall consist of an embossed pattern that does not occur in RLL (1,7) code (see 16) and is intended to enable the drive to identify the start of the sector without recourse to a phase-locked loop.

The Sector Mark shall have a length of 96 Channel bits and shall consist of pre-recorded, continuous, long marks of different Channel bit lengths followed by a lead-in to the $VFO_1$ field. This pattern does not exist in data.

There are two kinds of Sector Marks to identify even-numbered and odd-numbered bands. The Sector Mark pattern shall be as shown in figure 18, where T corresponds to the time length of one Channel bit. The signal obtained from a mark is less than a signal obtained from space. The lead-in shall have the Channel bit pattern 000101 for odd-numbered bands and 000001 for even-numbered bands.

The Sector Mark pattern used for the Inner Manufacturer Zone, the Inner Control Track SFP, the Transition Zone, and the Inner Guard Band shall be the same pattern as that used in band 23/44/37. The Sector Mark pattern used for the Lead-in Zone, the Outer Control Track SFP, the Outer Manufacturer Zone, and the Outer Guard Band shall be the same pattern as that used in band 0.



--`,,```,,,,````-`-`,,`,,`,`,,`---

Copyright International Organization for Standardization
Provided by IHS under license with ISO
No reproduction or networking permitted without license from IHS Not for Resale

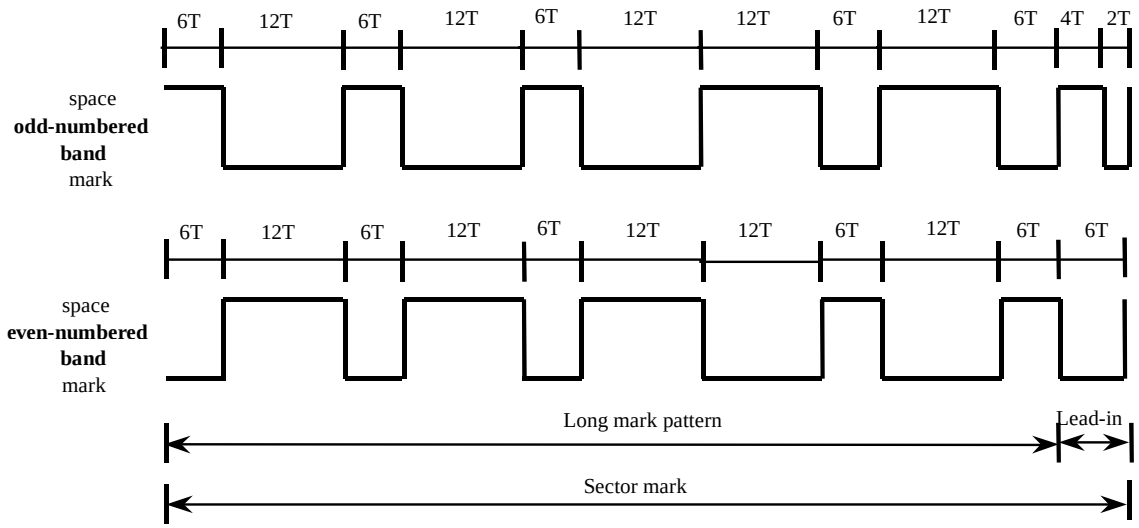


**Figure 18 - Sector Mark pattern**

### 15.3 VFO fields

There shall be three fields designated $VFO_1$, $VFO_2$ and $VFO_3$ (figure 19) to synchronize the VFO.

These fields shall be embossed, except for rewritable and write once sectors, in which case the $VFO_3$ field shall be written by the drive when data is written to the sector.

The continuous Channel bit pattern for VFO fields shall be:

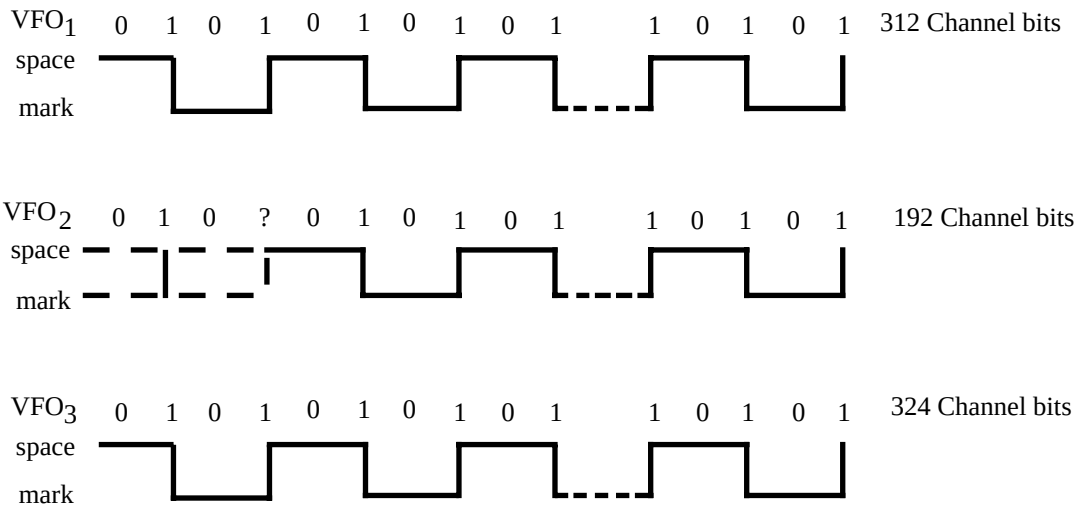


**Figure 19 - VFO Field Patterns**

The starting bits of $VFO_2$ shall be ZERO ONE ZERO considered as encoded from input bits ONE ZERO.

The fourth bit (denoted by ?) shall be set to either a ONE or ZERO so as to produce the mark-space pattern as defined. The objective is to set the 9T space between the trailing edge of the last mark of the VFO fields and the leading edge of the first mark of the following Address Mark. This value shall be such to produce the same pattern thereafter as the other VFO fields and to end this field in the trailing edge of an embossed mark.

The start of the $VFO_3$ field shall be not more than 6 Channel bits from the ideal position given in this International Standard. This tolerance allows for timing inaccuracies of the optical drive controller and shall be compensated for by the ALPC preceding the $VFO_3$ field and by the Buffer field at the end of the sector.



Copyright International Organization for Standardization
Provided by IHS under license with ISO
No reproduction or networking permitted without license from IHS
Not for Resale

### 15.4 Address Mark (AM)

The Address Mark shall consist of an embossed pattern that does not occur in RLL (1,7) code and which is a run-length violation for this code. The field is intended to give the drive byte synchronization for the following ID field. It shall have a length of 12 Channel bits with the following pattern:

0000 0000 10x0

where the value x shall be determined as follows:

if the first data bits of the following ID field are set to ZERO ZERO, x shall be set to ONE

if the first data bits of the following ID field are not set to ZERO ZERO, x shall be set to ZERO.

Since the last bit of the preceding VFO field is set to ONE, and a bit set to ONE appears in the AM after 8 other Channel bits, this 10-bit sequence constitutes the detection pattern.

### 15.5 ID fields

The two ID fields shall each contain the addresses of the sector, i.e. track number and sector number of the sector, and CRC bytes. Each field shall consist of five bytes with the following embossed contents:

**1st byte**

This byte shall specify the second least significant byte of the logical track number.

**2nd byte**

This byte shall specify the least significant byte of the logical track number.

**3rd byte**

| | |
|---|---|
| bit 7 | shall specify the ID number.<br>when set to ZERO shall mean the $ID_1$ field,<br>when set to ONE shall mean the $ID_2$ field, |
| bits 6 to 5 | shall specify the two most significant bits of the logical track number |
| bits 4 to 0 | shall specify the sector number in binary notation . |

**4th and 5th bytes**

These two bytes shall specify a 16-bit CRC computed over the first three bytes of this field (see annex E).

The first two data bits of the ID field shall be encoded using table 2. When doing this, the last Channel bit from the AM shall be used as input to the encoder.

The first three Channel bits of the ID field shall be decoded using table 3. When doing this, the last two Channel bits from the AM shall be used as input to the decoder.

### 15.6 Postamble ($PA_1$)

This field shall be equal in length to 24 Channel bits following the $ID_2$ field and shall be set as shown in figure 20.

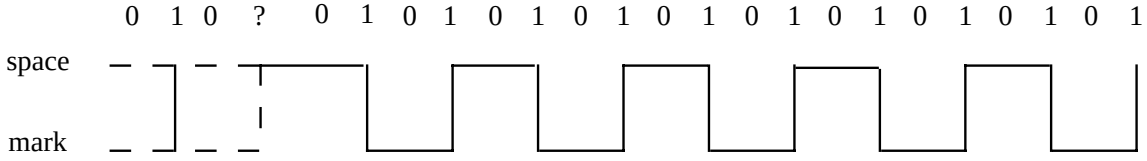


**Figure 20 - Postamble pattern**

The starting bits of the PA shall be ZERO ONE ZERO and considered as encoded from input bits ONE ZERO.



Copyright International Organization for Standardization
Provided by IHS under license with ISO
No reproduction or networking permitted without license from IHS Not for Resale

The value of the 4th bit (identified by ?) shall be such as to end this field in the trailing edge of an embossed mark such that the following gap field is always recorded as a space. Due to the use of the RLL (1,7) encoding scheme (see 16), the framing of the last byte of the CRC in the $ID_2$ field is uncertain within a few bit times. The Postamble allows the last byte of the CRC to achieve closure and permits the ID field to always end in a predictable manner. This is necessary in order to locate the following field in a consistent manner.

### 15.7 Transition Area ($TA_1$)

There are two Transition Areas in each sector. Each Transition Area shall be equal in length to 12 channel bits.

This area is used for transition from embossed headers to grooved areas. This area shall not contain user information. For embossed sectors $TA_1$ shall be embossed with a continuous 2T pattern.

### 15.8 Gap

There are two Gap fields in each sector.

The first Gap shall be equal in length to 48 Channel bits. It is the first field after $TA_1$ and gives the drive some time for processing after it has finished reading the header.

The second Gap shall be equal in length to 24 Channel bits.

The contents of the two Gap fields are not specified, and shall be ignored in interchange. For embossed sectors, the Gap shall be embossed with a continuous 2T pattern.

### 15.9 Flag

This field is intended to prevent inadvertent write operations over previously written data on Types WO and WO-DOW media. For Types R/W, O-ROM and DOW media and rewritable sectors of Types P-ROM and P-DOW media, the contents of this field are not specified, and shall be ignored in interchange. For embossed sectors, the Flag shall be embossed with a continuous 2T pattern of 60 Channel bits (010101010101...01).

For Type WO and Type WO-DOW media, the contents of this field are not specified, and shall be ignored in interchange. For sectors in the User Area of the User Zone, the Flag shall be unrecorded if the Data field of the sector is unrecorded and shall be recorded with a continuous 2T pattern of 60 Channel bits (010101010101...01) if the Data field of the sector is recorded.

### 15.10 Auto Laser Power Control (ALPC)

This field shall be equal in length to 72 Channel bits. It is intended for testing the laser power level.

In the case of R/W, DOW, WO or WO-DOW sectors, and the rewritable sectors of P-ROM and P-DOW, the contents of this field are not specified, and shall be ignored in interchange. For embossed sectors, the ALPC shall be embossed with a continuous 2T pattern.

### 15.11 Sync

The sync field is intended to allow the drive to obtain byte synchronization for the following Data field. It shall have a length of 48 Channel bits and be recorded with the bit pattern

0100 0010 0100 0010 0010 0010 0100 0100 1000 0010 0100 10x0

where the value x shall be as follows:

if the first data bits of the following Data field are set to ZERO ZERO, x shall be set to ONE



--`,,```,,,,````-`-`,,`,,`,`,,`---

Copyright International Organization for Standardization
Provided by IHS under license with ISO
No reproduction or networking permitted without license from IHS Not for Resale

if the first data bits of the following Data field are not set to ZERO ZERO, x shall be set to ZERO.

### 15.12 Data field

The Data field is intended for recording user data. It shall consist of either:

- 2 498 bytes comprising

  2 048 user bytes
  442 bytes for CRC, ECC and Resync
  8 bytes for Sector Written Flag (SWF)

- 1 278 bytes comprising

  1 024 user bytes
  242 bytes for CRC, ECC and Resync
  8 bytes for Sector Written Flag (SWF)
  4 (FF)-bytes

or

- 690 bytes comprising

  512 user bytes
  164 bytes for CRC, ECC and Resync
  8 bytes for Sector Written Flag (SWF)
  6 (FF)-bytes.

The disposition of these bytes in the Data field is specified in annex F.

The first two data bits of the Data field shall be encoded using table 2. When doing this, the last Channel bit from the Sync field shall be used as input to the encoder.

The first three Channel bits of the Data field shall be decoded using table 3. When doing this, the last two Channel bits from the Sync field shall be used as input to the decoder.

#### 15.12.1 User data bytes

These bytes are at the disposal of the user for recording information. There are 2 048, 1 024 or 512 such bytes depending on the sector format.

#### 15.12.2 CRC and ECC bytes

The Cyclic Redundancy Check bytes and Error Correction Code bytes are used by the error detection and correction system to rectify erroneous data. The ECC is a Reed-Solomon code of degree 16.

The computation of the check bytes of the CRC and ECC shall be as specified in annex F.

#### 15.12.3 Bytes for Sector Written Flag (SWF)

There shall be 8 bytes for Sector Written Flag. They are intended for use by drives handling Type WO and WO-DOW disks and indicate whether or not a sector on a disk of this type have been previously written (see also annex Y).

For Type WO and WO-DOW disks, this field shall be unrecorded when the sector does not contain user data. When user data have been written to the sector, the bytes of this field shall be set to (FF).

For all other Types of disks, these bytes shall always be set to (FF) when data is recorded in the sector.

#### 15.12.4 The bytes following SWF in the Data field of the 1 024-byte and 512-byte sector format

The four and six bytes following SWF in the Data field of the 1 024-byte and 512-byte sector format shall be set to (FF), respectively.



--`,,```,,,,````-`-`,,`,,`,`,,`---

Copyright International Organization for Standardization
Provided by IHS under license with ISO
No reproduction or networking permitted without license from IHS Not for Resale

### 15.12.5 Resync bytes

The Resync bytes enable a drive to regain byte synchronization after a large defect in the data field.

Annex G specifies the Resync bytes and the criteria for selection of which of the two bytes is to be used.

The Resync fields shall be inserted among the rest of the bytes of the Data field as specified in annex F.

### 15.13 Postamble field ($PA_2$)

This field shall have a nominal length of 24 Channel bits which shall be used for RLL (1,7) closure. This field shall end in a space to ensure that the Buffer field (see 15.14) shall consist of spaces. Permitted $PA_2$ patterns can either be $PA_1$ as defined in clause 15.6, or any other valid RLL (1,7) closure which shall end in space but shall not contain a bit sequence of ONE ONE.

### 15.14 Buffer field

The Buffer field is needed for four reasons. Firstly, the tolerance on the header-to-header distance as specified in 14.1. Secondly, the tolerance in the start of the $VFO_3$ field as specified in 15.3. Thirdly, the actual length of the written data, as determined by the runout of the track and the speed variations of the disk during writing of the data. Fourthly, to ensure that all data written previously, the length of which is subject to the above tolerances, has been erased.

For embossed sectors, the Buffer shall be embossed with a continuous 2T pattern.

### 15.15 Transition Area ($TA_2$)

This area is used for transition from grooved areas to embossed headers and shall be equal in length to 12 Channel bits. This area shall not contain user information. For embossed sectors $TA_2$ shall be embossed with a continuous 2T pattern.

## 16 Recording code

The 8-bit bytes in the two ID fields and in the data field shall be encoded into Channel bits on the disk according to table 2 and annex G. Channel bits in these fields shall be decoded to information bits according to table 3 and annex G. All other fields in a sector have already been defined in terms of Channel bits. Write pulses shall produce marks in a manner such that the edge between a mark and a space or a space and a mark corresponds to a Channel bit that is a ONE.

The recording code used to record all data in the formatted areas of the disk shall be the run-length limited code known as RLL (1,7) as defined in tables 2 and 3.



Copyright International Organization for Standardization
Provided by IHS under license with ISO
No reproduction or networking permitted without license from IHS Not for Resale

**Table 2 - Encoding of input bits to Channel bits**

| Preceding Channel bit | Current input bits | Following input bits | Channel bits RLL(1,7) |
|---|---|---|---|
| 0 or 1 | 00 | 00 or 01 | 001 |
| 0 | 00 | 10 or 11 | 000 |
| 1 | 00 | 10 or 11 | 010 |
| 0 | 01 | 00 or 01 | 001 |
| 0 | 01 | 10 or 11 | 000 |
| 1 | 01 | 00 | 010 |
| 1 | 01 | 01, 10, or 11 | 000 |
| 0 | 10 | 00 or 01 | 101 |
| 0 | 10 | 10 or 11 | 010 |
| 0 | 11 | 00 | 010 |
| 0 | 11 | 01, 10, or 11 | 100 |

The coding shall start at the first bit of the first byte of the field to be converted. After a Resync field the RLL (1,7) coding shall start again with the last two input bits of the Resync bytes.

**Table 3 - Decoding of Channel bits to information bits**

| Preceding Channel bits | Current Channel bits | Following Channel bits | Decoded information bits |
|---|---|---|---|
| 10 | 000 | 00, 01, or 10 | 00 |
| 00 or 01 | 000 | 00, 01, or 10 | 01 |
| 00 | 001 | 00 or 01 | 01 |
| 01 or 10 | 001 | 00 or 01 | 00 |
| 00 or 10 | 010 | 00 | 11 |
| 00 or 10 | 010 | 01 or 10 | 10 |
| 01 | 010 | 00 | 01 |
| 01 | 010 | 01 or 10 | 00 |
| 00 or 10 | 100 | 00, 01, or 10 | 11 |
| 00 or 10 | 101 | 00 or 01 | 10 |

# 17 Formatted Zone

## 17.1 General description of the Formatted Zone

The Formatted Zone contains all information on the disk relevant for data interchange. The information comprises embossed tracking provisions, embossed headers, embossed data and, possibly, user-written data. In this clause the term 'data' is reserved for the content of the Data field of a sector, which, in general, is transferred to the host.

Clause 17 defines the layout of the information; the characteristics of signals obtained from this information are specified in section 4 and 6.

## 17.2 Division of the Formatted Zone

The Formatted Zone shall be divided into zones containing the logical tracks indicated in table 4.

The dimensions are given as reference only, and are nominal locations. The tolerance on the location of logical track 0 is specified in clause 13.4. The tolerances on other radii are determined by the tolerance on the track pitch as specified in 13.3.



--`,,```,,,,````-`-`,,`,,`,`,,`---
Copyright International Organization for Standardization
Provided by IHS under license with ISO
No reproduction or networking permitted without license from IHS Not for Resale

The location of the zones defined in table 4 are also shown in figure 21.

**Table 4 – Layout of the Formatted Zone**

| | Radius in mm | | |
|---|---|---|---|
| | 2 048-byte sectors | 1 024-byte sectors | 512-byte sectors |
| - Lead-in Zone | 62,50 to 62,30 | 62,50 to 62,30 | 62,50 to 62,30 |
| - Outer Control Track SFP Zone | 62,30 to 62,25 | 62,30 to 62,25 | 62,30 to 62,25 |
| - Outer Manufacturer Zone | 62,25 to 62,10 | 62,25 to 62,00 | 62,25 to 62,00 |
| (Guard Band) | (62,25 to 62,25) | (62,25 to 62,25) | (62,25 to 62,25) |
| (Test Zone for manufacturers) | (62,25 to 62,24) | (62,25 to 62,24) | (62,25 to 62,24) |
| (Test Zone for drives) | (62,24 to 62,10) | (62,24 to 62,00) | (62,24 to 62,00) |
| (Guard Band) | (62,10 to 62,10) | (62,00 to 62,00) | (62,00 to 62,00) |
| - User Zone | 62,10 to 29,68 | 62,00 to 30,14 | 62,00 to 29,96 |
| - Inner Manufacturer Zone | 29,68 to 29,55 | 30,14 to 29,70 | 29,96 to 29,70 |
| (Guard Band) | (29,68 to 29,68) | (30,14 to 30,13) | (29,96 to 29,95) |
| (Test Zone for drives) | (29,68 to 29,56) | (30,13 to 29,71) | (29,95 to 29,71) |
| (Test Zone for manufacturers) | (29,56 to 29,55) | (29,71 to 29,71) | (29,71 to 29,71) |
| (Guard Band) | (29,55 to 29,55) | (29,71 to 29,70) | (29,71 to 29,70) |
| - Inner Control Track SFP Zone | 29,55 to 29,51 | 29,70 to 29,52 | 29,70 to 29,52 |
| - Transition Zone for SFP | 29,51 to 29,50 | 29,52 to 29,50 | 29,52 to 29,50 |
| - Control Track PEP Zone | 29,50 to 29,00 | 29,50 to 29,00 | 29,50 to 29,00 |
| - Reflective Zone | 29,00 to 27,00 | 29,00 to 27,00 | 29,00 to 27,00 |

| | Logical Track Address | | |
|---|---|---|---|
| | 2 048-byte sectors | 1 024-byte sectors | 512-byte sectors |
| - Lead-in Zone | -3 015 to –1 531 | -2 940 to –1 766 | -2 736 to –1 657 |
| - Outer Control Track SFP Zone | -1 530 to –1 126 | -1 765 to –1 471 | -1 656 to –1 369 |
| - Outer Manufacturer Zone | -1 125 to –1 | -1 470 to –1 | -1 368 to –1 |
| (Guard Band) | -1 125 to –1 100 | -1 470 to –1 451 | -1 368 to –1 349 |
| (Test Zone for manufacturers) | -1 099 to –1 048 | -1 450 to –1 411 | -1 348 to –1 309 |
| (Test Zone for drives) | -1 047 to –27 | -1 410 to –21 | -1 308 to –21 |
| (Guard Band) | -26 to –1 | -20 to –1 | -20 to –1 |
| - User Zone | 0 to 182 507 | 0 to 138 914 | 0 to 130 111 |
| - Inner Manufacturer Zone | 182 508 to 183 013 | 138 915 to 140 144 | 130 112 to 130 794 |
| (Guard Band) | 182 508 to 182 520 | 138 915 to 138 924 | 130 112 to 130 121 |
| (Test Zone for drives) | 182 521 to 182 974 | 138 925 to 140 114 | 130 122 to 130 764 |
| (Test Zone for manufacturers) | 182 975 to 183 000 | 140 115 to 140 134 | 130 765 to 130 784 |
| (Guard Band) | 183 001 to 183 013 | 140 135 to 140 144 | 130 785 to 130 794 |
| - Inner Control Track SFP Zone | 183 014 to 183 145 | 140 145 to 140 677 | 130 795 to 131 284 |
| - Transition Zone for SFP | 183 146 to 183 190 | 140 678 to 140 724 | 131 285 to 131 330 |
| - Control Track PEP Zone | N/A | N/A | N/A |
| - Reflective Zone | N/A | N/A | N/A |



--`,,```,,,,````-`-`,,`,,`,`,,`---
Copyright International Organization for Standardization
Provided by IHS under license with ISO
No reproduction or networking permitted without license from IHS Not for Resale

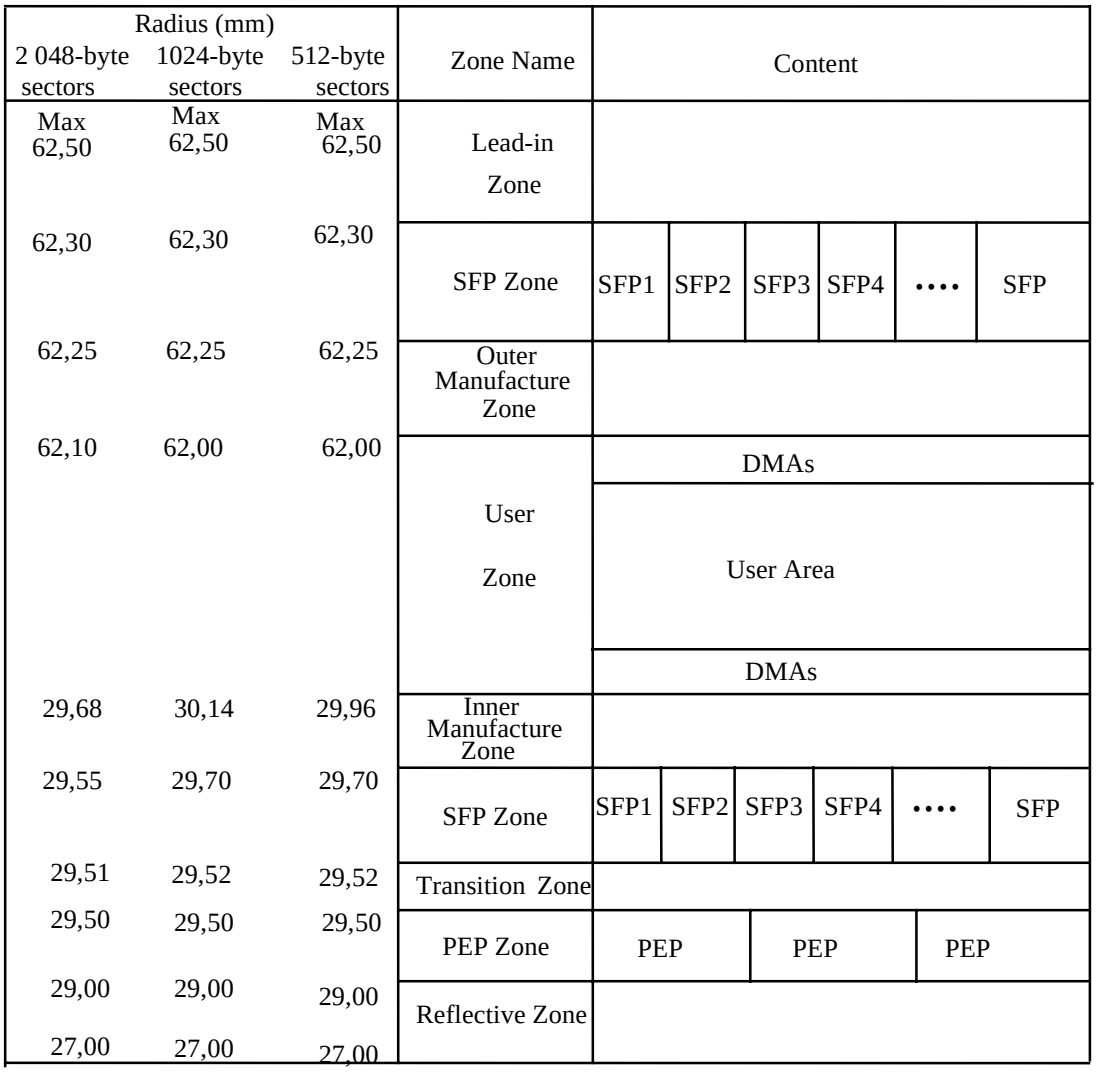


**Figure 21 - Location of the defined Zones**

### 17.2.1 Lead-in Zone

The Lead-in Zone shall be used for positioning purposes only.

### 17.2.2 Manufacturer Zones

There shall be an Inner and an Outer Manufacturer Zone. They are provided to allow the media manufacturer to perform tests on the disk, including write operations, in an area located away from recorded information.

#### 17.2.2.1 Outer Manufacturer Zone

The Outer Manufacturer Zone shall comprise 1 125/1 470/1 368 logical tracks.

The Outer Manufacturer Zone is divided into four parts: Two Guard bands and in between the actual Test Zones for drives and manufacturers.

The Test Zone for drives is intended for tests to enable a drive to set its write power and should not be used by media manufacturers, and shall not consist of embossed data in the case of fully rewritable or partially embossed disks. The tracks used for testing should be chosen from the Test Zone for drives in



Copyright International Organization for Standardization
Provided by IHS under license with ISO
No reproduction or networking permitted without license from IHS Not for Resale

a random way, so as to ensure a gradual degradation of the entire Test Zone due to use. Then each track in this zone will remain representative for the characteristics of tracks in the Data Zone of the disk.

The Test Zone for manufacturers is intended for quality tests by the media manufacturer and should not be used by drives.

The Test Zone for manufacturers may have embossed marks in the data field (see 15.12) that need not comply with the requirements of 15.12 or clause 16. The information in this zone is not specified by this International Standard and shall be ignored in interchange.

Logical tracks - 1 to -26/-20/-20 are a buffer and shall not be used.

All physical tracks in the Outer Manufacturer Zone shall contain 45/85/144 sectors.

#### 17.2.2.2 Inner Manufacturer Zone

The Inner Manufacturer Zone is also divided into four parts (see 17.2.2.1).

All physical tracks of the Inner Manufacturer zone shall contain 22/41/70 sectors.

### 17.2.3 User Zone

The Data fields in the User Zone can be user-written or contain embossed data, in the format of clause 15, depending upon the type of the disk.

The layout of the User Zone and its sub-divisions is specified in clause 18.

### 17.2.4 Reflective Zone

This International Standard does not specify the format of the Reflective Zone, except that it shall have the same recording layer as the remainder of the Formatted Zone.

### 17.2.5 Control Track Zones

The three zones on each side of the disk

Control track PEP Zone

Inner Control Track SFP Zone

Outer Control Track SFP Zone

shall be used for recording control track information.

The control track information shall be recorded in two different formats, the first format in the Control Track PEP Zone, and the second format in the Inner and Outer Control Track SFP Zones.

The Control Track PEP Zone shall be recorded using low frequency phase-encoded modulation.

The Inner and Outer Control Track SFP Zones shall each consist of tracks recorded by the same modulation method and format as is used in the User Zone (see clauses 16 and 18).

The Transition Zone for SFP is an area in which the format changes from the Control Track PEP Zone which contains no servo information to a zone including servo information.

All physical tracks in the Inner Control Track SFP Zone shall have 22/41/70 sectors.

All physical tracks in the Outer Control Track SFP Zone shall have 45/85/144 sectors.

## 17.3 Control Track PEP Zone

The information contained in the Control Track PEP Zone gives a general characterization of the disk. It specifies the type of disk, the ECC, the tracking method, etc.



--`,,```,,,,````-`-`,,`,,`,`,,`---

Copyright International Organization for Standardization
Provided by IHS under license with ISO
No reproduction or networking permitted without license from IHS Not for Resale

This zone shall not contain any servo information. All information shall be pre-recorded in phase-encoded modulation. The marks in all tracks of this zone shall be radially aligned, so as to allow information recovery from this zone without radial tracking being established by the drive.

The read power shall not exceed 0,65 mW.

### 17.3.1 Recording in the PEP Zone

In the PEP Zone there shall be 561 to 567 PEP-Channel bit cells per physical track. A PEP-Channel bit cell shall be 656 PEP-Channel bits ± 1 PEP-Channel bits long. A PEP-Channel bit is recorded by writing marks in either the first or the second half of the cell.

A mark shall be nominally two PEP-Channel bits long and shall be separated from adjacent marks by a space of nominally two PEP-Channel bits.

A ZERO shall be represented by a change from marks to spaces at the centre of the cell and a ONE by a change from spaces to marks at this centre.

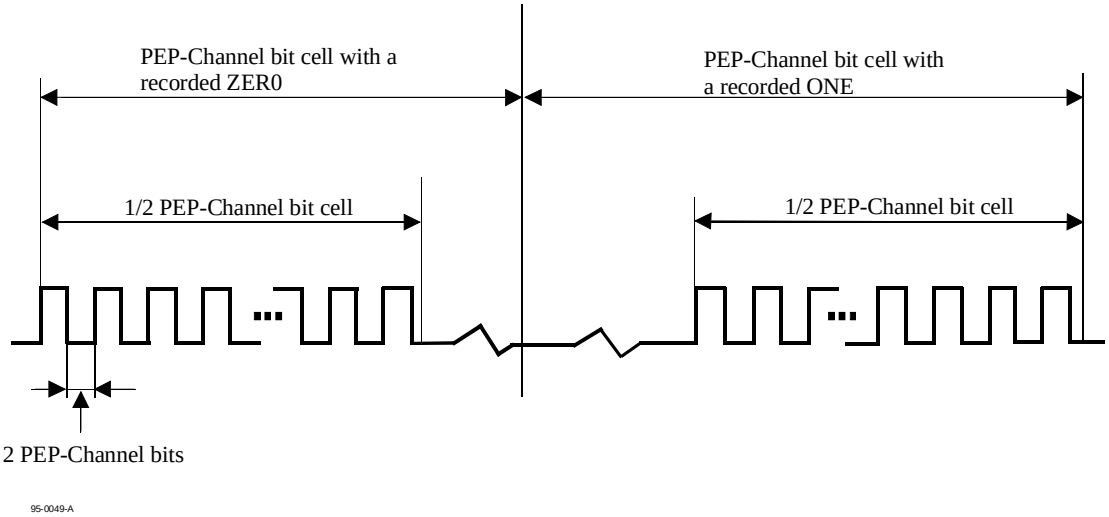


**Figure 22 - Example of phase-encoded modulation in the PEP Zone**

Requirements for the density of the tracks and the shape of marks in the Control Track PEP Zone are specified in clause 24.

### 17.3.2 Format of the tracks of the PEP Zone

Each physical track in the PEP Zone shall have three sectors. The numbers below the fields in figure 23 indicate the number of PEP-Channel bits in each field.

|<---------- One physical track (3 sectors) ---------->|

| Sector | Gap | Sector | Gap | Sector | Gap |
|---|---|---|---|---|---|
| 177 | | 177 | | 177 | |

**Figure 23 - Track format in the PEP Zone**

The gaps between sectors shall be unrecorded areas having a length corresponding to 10 to 12 PEP-Channel bit cells.

#### 17.3.2.1 Format of a sector

Each sector of 177 PEP-Channel bits shall have the following layout.



--`,,```,,,,````-`-`,,`,,`,`,,`---
Copyright International Organization for Standardization
Provided by IHS under license with ISO
No reproduction or networking permitted without license from IHS Not for Resale

|<---------- One sector (177 bits) ---------->|

| Preamble | Sync | Sector Number | Data | CRC |
|---|---|---|---|---|
| 16 | 1 | 8 | 144 | 8 |

**Figure 24 - Sector format in the PEP Zone**

**17.3.2.1.1 Preamble field**
This field shall consist of 16 PEP-Channel bits set to ZERO.

**17.3.2.1.2 Sync field**
This field shall consist of 1 PEP-Channel bit set to ONE.

**17.3.2.1.3 Sector Number field**
This field shall consist of eight bits specifying in binary notation the Sector Number from 0 to 2.

**17.3.2.1.4 Data field**
This field shall comprise 18 8-bit bytes numbered 0 to 17. These bytes shall specify the following.

**Byte 0**

bit 7 — shall be set to ZERO indicating the continuous servo tracking method,

bits 6 to 4 — shall be set to 110 indicating a logical ZCAV.

Other settings of these bits are prohibited by this International Standard (see also annex W).

bit 3 — shall be set to ZERO

bits 2 to 0 — shall be set to 010 indicating RLL (1,7) mark edge modulation,

Other settings of these bits are prohibited by this International Standard.

**Byte 1**

bit 7 — shall be set to ZERO

bits 6 to 4 — specify the error correction code:

when set to 000 shall indicate R-S LDC degree 16, and 10 interleaves.

when set to 001 shall indicate R-S LDC degree 16, and 5 interleaves.

when set to 010 shall indicate R-S LDC degree 16, and 20 interleaves.

Other settings of these bits are prohibited by this International Standard.

bit 3 — shall be set to ZERO

bits 2 to 0 — these bits shall specify in binary notation the power *n* of 2 in the following formula which expresses the number of user bytes per sector

$$256 \times 2^{n}$$

Values of *n* other than 1, 2 or 3 are prohibited by this International Standard.



Copyright International Organization for Standardization
Provided by IHS under license with ISO
No reproduction or networking permitted without license from IHS Not for Resale

**Byte 2**

This byte shall specify in binary notation the number of sectors in each logical track.

**Byte 3**

This byte shall give the manufacturer's specification for the baseline reflectance *R* of the disk when measured at a nominal wavelength of 685 nm. It is specified as a number *n* such that

$$n = 100\,R.$$

**Byte 4**

This byte shall specify that the recording is in-groove in the user zone and it shall indicate the signal amplitude of the pre-recorded marks.

bit 7 shall be set to ONE to specify in-groove recording.

The absolute value of the signal amplitude is given as a number *n* between -15 and –33 such that

$$n = -50\left(I_{sm} / I_{top}\right)$$

where $I_{sm}$ is the signal from the Sector Mark in Channel 1 and $I_{top}$ is the signal from an unrecorded, ungrooved area in the User Zone.

bits 6 to 0 shall express this number n. Bit 6 shall be set to ONE to indicate that this number is negative and expressed by bits 5 to 0 in TWO's complement. Recording is high-to-low.

**Byte 5**

This byte shall specify the capacity of the ODC in Gbytes (with one significant digit to the right of the decimal mark) times 10. For this International Standard, this byte shall be set to (34) representing a capacity of 5,2 Gbytes.

**Byte 6**

This byte shall specify in binary notation a number *n* representing 20 times the maximum read power expressed in milliwatts which is permitted for reading the SFP Zone at a rotational frequency of 50 Hz and a wavelength of 685 nm. This number *n* shall be between 30 and 40.

**Byte 7**

The setting of this byte shall specify:

0010 0000 Type R/W

0000 0000 Type O-ROM

1010 0000 Type P-ROM

0001 0001 Type WO

0110 0000 Type DOW

1110 0000 Type P-DOW

0001 0011 Type WO-DOW

Other settings of this byte are prohibited by this International Standard (see also annex W).

**Byte 8**

This byte shall specify the next most significant byte of the logical track number in which the Outer Control Track SFP Zone starts. It shall be set to (FA) or (F9) or (F9) representing the next MSB of track number -1 530/-1 765/-1 656.



Copyright International Organization for Standardization
Provided by IHS under license with ISO
No reproduction or networking permitted without license from IHS Not for Resale

**Byte 9**

This byte shall specify the least significant byte of the logical track number in which the Outer Control Track SFP Zone starts. It shall be set to (06) or (1B) or (88) representing the LSB of track number -1 530/-1 765/-1 656.

**Byte 10**

This byte shall specify the next most significant byte of the logical track number in which the Inner Control Track SFP Zone starts. It shall be set to (CA) or (23) or (FE) representing the next MSB of Logical Track Number 183 014/140 145/130 795.

**Byte 11**

This byte shall specify the least significant byte of the logical track number in which the Inner Control Track SFP Zone starts. It shall be set to (E6) or (71) or (EB) representing the LSB of Logical Track Number 183 014/140 145/130 795.

**Byte 12**

This byte shall specify the track pitch in micrometers times 100. It shall be set to (55) representing a track pitch of 0,85 μm.

**Byte 13**

This byte shall be set to (FF) and shall be ignored in interchange.

**Byte 14**

This byte shall specify the most significant byte of the Logical Track Number in which the Outer SFP Zone starts. It shall be set to (FF) or (FF) or (FF) representing the MSB of Logical Track Number. -1 530/-1 765/-1 656

**Byte 15**

This byte shall specify the most significant byte of the logical track number in which the Inner Control Track SFP Zone starts. It shall be set to (02) or (02) or (01) representing the MSB of Logical Track Number 183 014/140 145/130 795.

**Bytes 16 and 17**

The contents of these bytes are not specified by this International Standard and shall be ignored in interchange.

**17.3.2.1.5 CRC**

The eight bits of the CRC shall be computed over the Sector Number field and the Data field of the PEP sector.

The generator polynomial shall be

$$G(x) = x^8 + x^4 + x^3 + x^2 + 1$$

The residual polynomial $R(x)$ shall be

$$R(x) = \left( \sum_{i=144}^{i=151} \overline{a}_i x^i + \sum_{i=0}^{i=143} a_i x^i \right) x^8 \mod G(x)$$

where $a_i$ denotes a bit of the input data and $\overline{a}_i$ an inverted bit. The highest order bit of the sector number field is $a_{151}$.



Copyright International Organization for Standardization
Provided by IHS under license with ISO
No reproduction or networking permitted without license from IHS Not for Resale

The eight bits $c_k$ of the CRC are defined by

$$R(x) = \sum_{k=0}^{k=7} c_k x^k$$

where $c_7$ is recorded as the highest order bit of the CRC byte of the PEP sector.

#### 17.3.2.2 Summary of the format of the Data field of a sector

**Table 5 - Format of the Data field of a sector of the PEP Zone**

| Byte \ Bit | 7 | 6 | 5 | 4 | 3 | 2 | 1 | 0 |
|---|---|---|---|---|---|---|---|---|
| 0 | Format | Logical ZCAV | | | 0 | Modulation code | | |
| 1 | 0 | ECC | | | 0 | Number of user bytes | | |
| 2 | Number of sectors in each logical track | | | | | | | |
| 3 | Baseline reflectance at 685 nm | | | | | | | |
| 4 | 0 | Amplitude and polarity of pre-formatted data | | | | | | |
| 5 | ODC Capacity | | | | | | | |
| 6 | Maximum read power for the SFP Zone at 50 Hz and 685 nm | | | | | | | |
| 7 | Disk Type | | | | | | | |
| 8 | Start Track of Outer SFP Zone, next MSB of Logical Track Number | | | | | | | |
| 9 | Start Track of Outer SFP Zone, LSB of Logical Track Number | | | | | | | |
| 10 | Start Track of Inner SFP Zone, next MSB of Logical Track Number | | | | | | | |
| 11 | Start Track of Inner SFP Zone, LSB of Logical Track Number | | | | | | | |
| 12 | Track pitch | | | | | | | |
| 13 | (FF) | | | | | | | |
| 14 | Start track of Outer SFP Zone, MSB of Logical Track Number | | | | | | | |
| 15 | Start track of Inner SFP Zone, MSB of Logical Track Number | | | | | | | |
| 16 | Not Specified by this International Standard | | | | | | | |
| 17 | Not Specified by this International Standard | | | | | | | |

### 17.4 Control Track SFP Zones

The two Control Track SFP Zones shall be pre-recorded in the sector format specified in clause 15. The pre-recorded data marks shall satisfy the requirements for the signals specified in clause 23.

Each sector of the SFP Zones (see 17.2.5) shall include 512 bytes of information numbered 0 to 511;

- a duplicate of the PEP information (18 bytes),
- media information (362 bytes),
- system information (132 bytes),

In the case of 1 024-byte sectors these first 512 bytes shall be followed by 512 (FF)-bytes. In the case of 2 048-byte sectors these first 512 bytes shall be followed by 1 536 bytes set to (FF).



Copyright International Organization for Standardization
Provided by IHS under license with ISO
No reproduction or networking permitted without license from IHS Not for Resale

### 17.4.1 Duplicate of the PEP information

Bytes 0 to 17 shall be identical with the 18 bytes of the Data field of a sector of the PEP Zone (see 17.3.2.1.4).

### 17.4.2 Media information

Bytes 18 to 47 shall specify the conditions for

Wavelength $L_1$ = 685 nm;

Baseline Reflectance $R_1$;

and Rotational Frequency $N_1$ = 50 Hz.

For the value of $N$ one set of write power for the 4T mark is given: it contains three values for the inner, middle and outer radius.

All values specified in bytes 18 to 47 shall be such that the requirements of 11.5 and of clauses 25, 26, 27 and 28 are met (see table 6).

**Byte 18**

This byte shall specify the wavelength $L_1$, in nanometres, as a number $n$ between 0 and 255 such that

$$n = 1/5\ L_1$$

This byte shall be set to $n$ = 137 for ODCs according to this International Standard.

**Byte 19**

This byte shall specify the baseline reflectance $R_1$ (see 11.5.5) at wavelength $L_1$ as a number $n$ such that

$$n = 100\ R_1$$

**Byte 20**

This byte shall specify the rotational frequency $N_1$, in hertz, as a number $n$ such that

$$n = N_1$$

This byte shall be set to $n$ = 50 for ODCs according to this International Standard.

**Byte 21**

This byte shall specify the maximum read power $P_1$ in milliwatts, for the User Zone as a number $n$ between 30 and 40 such that

$$n = 20\ P_1$$

**Bytes 22 to 24**

These bytes are not used and shall be set to (FF).

The following bytes 25 to 27 shall specify the write power $P_w$ for 4T marks in milliwatts indicated by the manufacturer of the disk (see 25.3.3). $P_w$ is expressed as a number $n$ between 0 and 255 such that

$$n = 5P_W$$

**Byte 25**

This byte shall specify $P_w$ for

$$r = 30 \text{ mm}$$



Copyright International Organization for Standardization
Provided by IHS under license with ISO
No reproduction or networking permitted without license from IHS Not for Resale

**Byte 26**

This byte shall specify $P_w$ for

$r$ = 45 mm

**Byte 27**

This byte shall specify $P_w$ for

$r$ = 60 mm

The following bytes 28 to 30 shall specify the thermal build-up offset $E_{th}$ or $E_{th2}$ (for media Types DOW, P-DOW, and WO-DOW) in percent of the time period T of one Channel bit indicated by the manufacturer of the disk (see 27.5). $E_{th}$ or $E_{th2}$ shall be expressed as a number $n$ between 0 and 255 such that

$n = 2\ E_{th}$ or $E_{th2}$

**Byte 28**

This byte shall specify $E_{th}$ or $E_{th2}$ for

$r$ = 30 mm

**Byte 29**

This byte shall be set to (FF)

**Byte 30**

This byte shall be set to (FF)

**Byte 31**

This byte shall specify the thermal build-up offset $E_{th1}$ at r=30 mm for media types DOW, P-DOW and WO-DOW only in percent of the time period T of one Channel bit indicated by the manufacturer of the disk (see 27.5). Otherwise this byte shall be set to (FF). $E_{th1}$ shall be expressed as a number $n$ between 0 and 255 such that $n$

$n = 2\ E_{th1}$

**Byte 32 to 43**

These bytes are not used and shall be set to (FF)

**Byte 44**

This byte shall be set to (00)

The following bytes 45 to 47 shall specify the d.c. erase power $P_e$ in milliwatts indicated by the manufacturer of the disk (see clause 28). $P_e$ shall be expressed as a number $n$ between 0 and 255 such that

$n = 5\ P_e$

**Byte 45**

This byte shall specify $P_e$ for

$r$ = 30 mm

**Byte 46**

This byte shall specify $P_e$ for

$r$ = 45 mm

**Byte 47**



Copyright International Organization for Standardization
Provided by IHS under license with ISO
No reproduction or networking permitted without license from IHS Not for Resale

This byte shall specify $P_e$ for

$r$ = 60 mm

**Byte 48 to Byte 363**

These bytes are not used by this International Standard and shall be set to (FF)

**Byte 364**

This byte shall specify the polarity of the figure of merit (see 26.1). It shall be set to (01) to mean that the polarity is negative (the direction of Kerr rotation due to the written mark is counterclock-wise).

**Byte 365**

This byte shall specify the figure of merit $F$ as a number $n$ (see 26.1), such that

$n = 10000\ F$

**Bytes 366 to 379**

These bytes shall be set to (FF).

### 17.4.3 System Information

Bytes 380 to 386 are mandatory. Bytes 384 to 386 shall specify in binary notation the Logical Track Number of the last logical track of the User Zone. The total number of logical tracks in this zone equals the Logical Track Number of the last logical track of the User Zone increased by 1. For disks with 2 048-byte sectors, the Logical Track Number of the last logical track of the User Zone shall be 182 507. For disks with 1 024-byte sectors, the Logical Track Number of the last logical track of the User Zone shall be 138 914. For disks with 512-byte sectors, the Logical Track Number of the last logical track of the User Zone shall be 130 111.

**Bytes 380 to 383: Reserved**

These bytes shall be set to (FF).

**Byte 384**

This byte shall be set to (02) for 2 048-byte sectors, (02) for 1 024-byte sectors and (01) for 512-byte sectors, indicating the most significant byte of the number of the last logical track of the User Zone.

**Byte 385**

This byte shall be set to (C8) for 2 048-byte sectors, (1E) for 1 024-byte sectors and (FC) for 512-byte sectors, indicating the next most significant byte of the number of the last logical track of the User Zone.

**Bytes 386**

This byte shall be set to (EB) for 2 048-byte sectors, (A2) for 1 024-byte sectors and (3F) for 512-byte sectors, indicating the least significant byte of the number of the last logical track of the User Zone.

**Bytes 387 to 399: Reserved**

These bytes shall be set to (FF).

**Bytes 400 to 445/466/459: Control bytes for partially embossed disks**

This information is required for Types P-ROM and P-DOW and contains parameter values for bytes 0 to 45/66/59 of the DDS. The value of Byte 3 of the DDS may be chosen during initialization and need not agree with SFP Byte 403. These control bytes shall be defined by the manufacturer at the time the disk is manufactured. Bytes 414 to 421, which represent addresses of the PDL and SDL, shall be set to (FF).

For Types R/W, DOW, O-ROM, WO and WO-DOW these bytes shall be set to (FF).



Copyright International Organization for Standardization
Provided by IHS under license with ISO
No reproduction or networking permitted without license from IHS Not for Resale

**Bytes 446/467/460 to 479: Reserved.**

These bytes shall be set to (FF).

**Bytes 480 to 511: Unspecified data**

The contents of these bytes are not specified in this International Standard. They may contain an identification of the manufacturer. They shall be ignored in interchange.

**Bytes 512 to 1 023/2 047: Reserved**

These bytes shall be set to (FF).

**Table 6 - Summary of media information**

| Category | Mandatory | Optional or (FF) | Mandatory (FF) |
|---|---|---|---|
| Media Parameter | 0-12, 14, 15 | | 13 |
| Unspecified | | 16-17 | |
| $L_1$ & $R_1$ | 18-19 | | |
| $N_1$ Values | 20-21, 25-31, 44-47 | | 22-24, 32-43 |
| Not used | | | 48 to 363 |
| Figure of Merit | 364-365 | | |
| Reserved | | | 366-383 |
| Last track number | 384-386 | | |
| Reserved | | | 387-399 |
| DDS information or (FF) | 400-413, 422-445/466/459 for Types P-ROM and P-DOW | | 400-445/466/459 for Types R/W, DOW O-ROM, WO and WO-DOW 414-421 for Types P-ROM and P-DOW |
| Reserved | | | 446/467/460-479 |
| Unspecified | | 480-511 | |
| 1024-byte sectors | | | 512-1 023 |
| 2 048-byte sectors | | | 512-2 047 |

# 18 Layout of the User Zone

## 18.1 General description of the User Zone

The User Zone data capacity per side is 2,616 Gbytes for disks with 2 048-byte sectors, 2,418 Gbytes for disks with 1 024-byte sectors and 2,065 Gbytes for disks with 512-byte sectors. The spare sectors and the non-usable sectors are included in the above figures.

The location and size of the User Zone are specified in clause 17.

## 18.2 Divisions of the User Zone

The User Zone shall include four Defect Management Areas (DMA), two at the beginning of the zone and two at the end. The area between the two sets of DMAs is called the User Area.

The entire User Zone shall also be divided into bands as a result of the ZCAV organization of the disk.



Copyright International Organization for Standardization
Provided by IHS under license with ISO
No reproduction or networking permitted without license from IHS Not for Resale

Each of these bands shall contain the same number of physical tracks. Each such band is divided into logical tracks which have the same number of sectors. The number of logical tracks per band decreases from band to band moving from the outer radius to the inner radius.

When the sectors contain 2 048 user bytes, the User Zone shall be divided into 24 bands numbered 0 to 23 as shown in table 7.

When the sectors contain 1 024 user bytes, the User Zone shall be divided into 45 bands numbered 0 to 44 as shown in table 8.

When the sectors contain 512 bytes of user data, the User Zone shall be divided into 38 bands numbered 0 to 37 as shown in table 9.

The hierarchy is thus:

| | | |
|---|---|---|
| For 2 048-byte sector disks: | 7 sectors | = 1 logical track |
| | 4 994 to 10 215 logical tracks | = 1 band |
| | 1 589 physical tracks | = 1 band |
| | 24 bands | = the User Zone |
| For 1 024-byte sector disks: | 17 sectors | = 1 logical track |
| | 2 009 to 4 165 logical tracks | = 1 band |
| | 833 physical tracks | = 1 band |
| | 45 bands | = the User Zone |
| For 512-byte sector disks: | 31 sectors | = 1 logical track |
| | 2 240 to 4 608 logical tracks | = 1 band |
| | 992 physical tracks | = 1 band |
| | 38 bands | = the User Zone |

### 18.3 User Area

The Data fields in the User Area are intended for recording of user data.

The User Area shall consist of:

— a Rewritable Zone, or

— an Embossed Zone, or

— an Embossed Zone and a Rewritable zone, or

— a Write Once Zone.

The User Area shall begin with track 6 and end with track 182 481/138 893/130 090. However, at the boundaries between bands, it shall not include the last 40/30/30 tracks of a band, and it shall not include the first 20/15/15 tracks of the next band.

There shall be 600/450/228 spare logical tracks in the User Area.

In addition, the User Area shall be partitioned into groups of bands. This International Standard describes one partitioning where each group resides in one band, i.e. there is a total of 24/45/38 groups.

Type R/W, DOW, P-ROM, P-DOW, O-ROM, WO and WO-DOW disks shall be partitioned according to alternative one . See 18.6.2, 18.7.2, and 18.8.2.



--`,,```,,,,````-`-`,,`,,`,`,,`---
Copyright International Organization for Standardization
Provided by IHS under license with ISO
No reproduction or networking permitted without license from IHS Not for Resale

**Table 7 - 2 048-byte sector disks: 24 groups**

| Band No. | Sectors per physical track | Tracks per band | Start track | Data start | Spares start | Buffer start | Test start | Buffer start |
|---|---|---|---|---|---|---|---|---|
| 0 | 45 | 10 215 | 0 | 6 | 10 150 | 10 175 | 10 188 | 10 195 |
| 1 | 44 | 9 988 | 10 215 | 10 235 | 20 138 | 20 163 | 20 176 | 20 183 |
| 2 | 43 | 9 761 | 20 203 | 20 223 | 29 899 | 29 924 | 29 937 | 29 944 |
| 3 | 42 | 9 534 | 29 964 | 29 984 | 39 433 | 39 458 | 39 471 | 39 478 |
| 4 | 41 | 9 307 | 39 498 | 39 518 | 48 740 | 48 765 | 48 778 | 48 785 |
| 5 | 40 | 9 080 | 48 805 | 48 825 | 57 820 | 57 845 | 57 858 | 57 865 |
| 6 | 39 | 8 853 | 57 885 | 57 905 | 66 673 | 66 698 | 66 711 | 66 718 |
| 7 | 38 | 8 626 | 66 738 | 66 758 | 75 299 | 75 324 | 75 337 | 75 344 |
| 8 | 37 | 8 399 | 75 364 | 75 384 | 83 698 | 83 723 | 83 736 | 83 743 |
| 9 | 36 | 8 172 | 83 763 | 83 783 | 91 870 | 91 895 | 91 908 | 91 915 |
| 10 | 35 | 7 945 | 91 935 | 91 955 | 99 815 | 99 840 | 99 853 | 99 860 |
| 11 | 34 | 7 718 | 99 880 | 99 900 | 107 533 | 107 558 | 107 571 | 107 578 |
| 12 | 33 | 7 491 | 107 598 | 107 618 | 115 024 | 115 049 | 115 062 | 115 069 |
| 13 | 32 | 7 264 | 115 089 | 115 109 | 122 288 | 122 313 | 122 326 | 122 333 |
| 14 | 31 | 7 037 | 122 353 | 122 373 | 129 325 | 129 350 | 129 363 | 129 370 |
| 15 | 30 | 6 810 | 129 390 | 129 410 | 136 135 | 136 160 | 136 173 | 136 180 |
| 16 | 29 | 6 583 | 136 200 | 136 220 | 142 718 | 142 743 | 142 756 | 142 763 |
| 17 | 28 | 6 356 | 142 783 | 142 803 | 149 074 | 149 099 | 149 112 | 149 119 |
| 18 | 27 | 6 129 | 149 139 | 149 159 | 155 203 | 155 228 | 155 241 | 155 248 |
| 19 | 26 | 5 902 | 155 268 | 155 288 | 161 105 | 161 130 | 161 143 | 161 150 |
| 20 | 25 | 5 675 | 161 170 | 161 190 | 166 780 | 166 805 | 166 818 | 166 825 |
| 21 | 24 | 5 448 | 166 845 | 166 865 | 172 228 | 172 253 | 172 266 | 172 273 |
| 22 | 23 | 5 221 | 172 293 | 172 313 | 177 449 | 177 474 | 177 487 | 177 494 |
| 23 | 22 | 4 994 | 177 514 | 177 534 | 182 457 | 182 488 | 182 501 | N/A |



Copyright International Organization for Standardization
Provided by IHS under license with ISO
No reproduction or networking permitted without license from IHS Not for Resale

**Table 8 - 1 024-byte sector disks: 45 groups**

| Band No. | Sectors per physical track | Tracks per band | Start Track | Data Start | Spares Start | Buffer Start | Test Start | Buffer Start |
|---|---|---|---|---|---|---|---|---|
| 0 | 85 | 4 165 | 0 | 6 | 4 125 | 4 135 | 4 145 | 4 150 |
| 1 | 84 | 4 116 | 4 165 | 4 180 | 8 241 | 8 251 | 8261 | 8 266 |
| 2 | 83 | 4 067 | 8 281 | 8 296 | 12 308 | 12 318 | 12 328 | 12 333 |
| 3 | 82 | 4 018 | 12 348 | 12 363 | 16 326 | 16 336 | 16 346 | 16 351 |
| 4 | 81 | 3 969 | 16 366 | 16 381 | 20 295 | 20 305 | 20 315 | 20 320 |
| 5 | 80 | 3 920 | 20 335 | 20 350 | 24 215 | 24 225 | 24 235 | 24 240 |
| 6 | 79 | 3 871 | 24 255 | 24 270 | 28 086 | 28 096 | 28 106 | 28 111 |
| 7 | 78 | 3 822 | 28 126 | 28 141 | 31 908 | 31 918 | 31 928 | 31 933 |
| 8 | 77 | 3 773 | 31 948 | 31 963 | 35 681 | 35 691 | 35 701 | 35 706 |
| 9 | 76 | 3 724 | 35 721 | 35 736 | 39 405 | 39 415 | 39 425 | 39 430 |
| 10 | 75 | 3 675 | 39 445 | 39 460 | 43 080 | 43 090 | 43 100 | 43 105 |
| 11 | 74 | 3 626 | 43 120 | 43 135 | 46 706 | 46 716 | 46 726 | 46 731 |
| 12 | 73 | 3 577 | 46 746 | 46 761 | 50 283 | 50 293 | 50 303 | 50 308 |
| 13 | 72 | 3 528 | 50 323 | 50 338 | 53 811 | 53 821 | 53 831 | 53 836 |
| 14 | 71 | 3 479 | 53 851 | 53 866 | 57 290 | 57 300 | 57 310 | 57 315 |
| 15 | 70 | 3 430 | 57 330 | 57 345 | 60 720 | 60 730 | 60 740 | 60 745 |
| 16 | 69 | 3 381 | 60 760 | 60 775 | 64 101 | 64 111 | 64 121 | 64 126 |
| 17 | 68 | 3 332 | 64 141 | 64 156 | 67 433 | 67 443 | 67 453 | 67 458 |
| 18 | 67 | 3 283 | 67 473 | 67 488 | 70 716 | 70 726 | 70 736 | 70 741 |
| 19 | 66 | 3 234 | 70 756 | 70 771 | 73 950 | 73 960 | 73 970 | 73 975 |
| 20 | 65 | 3 185 | 73 990 | 74 005 | 77 135 | 77 145 | 77 155 | 77 160 |
| 21 | 64 | 3 136 | 77 175 | 77 190 | 80 271 | 80 281 | 80 291 | 80 296 |
| 22 | 63 | 3 087 | 80 311 | 80 326 | 83 358 | 83 368 | 83 378 | 83 383 |
| 23 | 62 | 3 038 | 83 398 | 83 413 | 86 396 | 86 406 | 86 416 | 86 421 |
| 24 | 61 | 2 989 | 86 436 | 86 451 | 89 385 | 89 395 | 89 405 | 89 410 |
| 25 | 60 | 2 940 | 89 425 | 89 440 | 92 325 | 92 335 | 92 345 | 92 350 |
| 26 | 59 | 2 891 | 92 365 | 92 380 | 95 216 | 95 226 | 95 236 | 95 241 |
| 27 | 58 | 2 842 | 95 256 | 95 271 | 98 058 | 98 068 | 98 078 | 98 083 |
| 28 | 57 | 2 793 | 98 098 | 98 113 | 100 851 | 100 861 | 100 871 | 100 876 |
| 29 | 56 | 2 744 | 100 891 | 100 906 | 103 595 | 103 605 | 103 615 | 103 620 |



--`,,```,,,,````-`-`,,`,,`,`,,`---

Copyright International Organization for Standardization
Provided by IHS under license with ISO
No reproduction or networking permitted without license from IHS Not for Resale

**Table 8 (continued) - 1 024-byte sector disks: 45 groups**

| Band No. | Sectors per physical track | Tracks per band | Start Track | Data Start | Spares Start | Buffer Start | Test Start | Buffer Start |
|---|---|---|---|---|---|---|---|---|
| 30 | 55 | 2 695 | 103 635 | 103 650 | 106 290 | 106 300 | 106 310 | 106 315 |
| 31 | 54 | 2 646 | 106 330 | 106 345 | 108 936 | 108 946 | 108 956 | 108 961 |
| 32 | 53 | 2 597 | 108 976 | 108 991 | 111 533 | 111 543 | 111 553 | 111 558 |
| 33 | 52 | 2 548 | 111 573 | 111 588 | 114 081 | 114 091 | 114 101 | 114 106 |
| 34 | 51 | 2 499 | 114 121 | 114 136 | 116 580 | 116 590 | 116 600 | 116 605 |
| 35 | 50 | 2 450 | 116 620 | 116 635 | 119 030 | 119 040 | 119 050 | 119 055 |
| 36 | 49 | 2 401 | 119 070 | 119 085 | 121 431 | 121 441 | 121 451 | 121 456 |
| 37 | 48 | 2 352 | 121 471 | 121 486 | 123 783 | 123 793 | 123 803 | 123 808 |
| 38 | 47 | 2 303 | 123 823 | 123 838 | 126 086 | 126 096 | 126 106 | 126 111 |
| 39 | 46 | 2 254 | 126 126 | 126 141 | 128 340 | 128 350 | 128 360 | 128 365 |
| 40 | 45 | 2 205 | 128 380 | 128 395 | 130 545 | 130 555 | 130 565 | 130 570 |
| 41 | 44 | 2 156 | 130 585 | 130 600 | 132 701 | 132 711 | 132 721 | 132 726 |
| 42 | 43 | 2 107 | 132 741 | 132 756 | 134 808 | 134 818 | 134 828 | 134 833 |
| 43 | 42 | 2 058 | 134 848 | 134 863 | 136 866 | 136 876 | 136 886 | 136 891 |
| 44 | 41 | 2 009 | 136 906 | 136 921 | 138 884 | 138 900 | 138 910 | N/A |



--`,,```,,,,````-`-`,,`,,`,`,,`---

Copyright International Organization for Standardization
Provided by IHS under license with ISO
No reproduction or networking permitted without license from IHS Not for Resale

**Table 9 - 512-byte sector disks: 38 groups**

| Band No. | Sectors per physical track | Tracks per band | Start Track | Data Start | Spares Start | Buffer Start | Test Start | Buffer Start |
|---|---|---|---|---|---|---|---|---|
| 0 | 144 | 4 608 | 0 | 6 | 4 572 | 4 578 | 4 588 | 4 593 |
| 1 | 142 | 4 544 | 4 608 | 4 623 | 9 116 | 9 122 | 9 132 | 9 137 |
| 2 | 140 | 4 480 | 9 152 | 9 167 | 13 596 | 13 602 | 13 612 | 13 617 |
| 3 | 138 | 4 416 | 13 632 | 13 647 | 18 012 | 18 018 | 18 028 | 18 033 |
| 4 | 136 | 4 352 | 18 048 | 18 063 | 22 364 | 22 370 | 22 380 | 22 385 |
| 5 | 134 | 4 288 | 22 400 | 22 415 | 26 652 | 26 658 | 26 668 | 26 673 |
| 6 | 132 | 4 224 | 26 688 | 26 703 | 30 876 | 30 882 | 30 892 | 30 897 |
| 7 | 130 | 4 160 | 30 912 | 30 927 | 35 036 | 35 042 | 35 052 | 35 057 |
| 8 | 128 | 4 096 | 35 072 | 35 087 | 39 132 | 39 138 | 39 148 | 39 153 |
| 9 | 126 | 4 032 | 39 168 | 39 183 | 43 164 | 43 170 | 43 180 | 43 185 |
| 10 | 124 | 3 968 | 43 200 | 43 215 | 47 132 | 47 138 | 47 148 | 47 153 |
| 11 | 122 | 3 904 | 47 168 | 47 183 | 51 036 | 51 042 | 51 052 | 51 057 |
| 12 | 120 | 3 840 | 51 072 | 51 087 | 54 876 | 54 882 | 54 892 | 54 897 |
| 13 | 118 | 3 776 | 54 912 | 54 927 | 58 652 | 58 658 | 58 668 | 58 673 |
| 14 | 116 | 3 712 | 58 688 | 58 703 | 62 364 | 62 370 | 62 380 | 62 385 |
| 15 | 114 | 3 648 | 62 400 | 62 415 | 66 012 | 66 018 | 66028 | 66 033 |
| 16 | 112 | 3 584 | 66 048 | 66 063 | 69 596 | 69 602 | 69 612 | 69 617 |
| 17 | 110 | 3 520 | 69 632 | 69 647 | 73 116 | 73 122 | 73 132 | 73 137 |
| 18 | 108 | 3 456 | 73 152 | 73 167 | 76 572 | 76 578 | 76 588 | 76 593 |
| 19 | 106 | 3 392 | 76 608 | 76 623 | 79 964 | 79 970 | 79 980 | 79 985 |
| 20 | 104 | 3 328 | 80 000 | 80 015 | 83 292 | 83 298 | 83 308 | 83 313 |
| 21 | 102 | 3 264 | 83 328 | 83 343 | 86 556 | 86 562 | 86 572 | 86 577 |
| 22 | 100 | 3 200 | 86 592 | 86 607 | 89 756 | 89 762 | 89 772 | 89 777 |
| 23 | 98 | 3 136 | 89 792 | 89 807 | 92 892 | 92 898 | 92 908 | 92 913 |
| 24 | 96 | 3 072 | 92 928 | 92 943 | 95 964 | 95 970 | 95 980 | 95 985 |
| 25 | 94 | 3 008 | 96 000 | 96 015 | 98 972 | 98 978 | 98 988 | 98 993 |
| 26 | 92 | 2 944 | 99 008 | 99 023 | 101 916 | 101 922 | 101 932 | 101 937 |
| 27 | 90 | 2 880 | 101 952 | 101 967 | 104 796 | 104 802 | 104 812 | 104 817 |
| 28 | 88 | 2 816 | 104 832 | 104 847 | 107 612 | 107 618 | 107 628 | 107 633 |
| 29 | 86 | 2 752 | 107 648 | 107 663 | 110 364 | 110 370 | 110 380 | 110 385 |
| 30 | 84 | 2 688 | 110 400 | 110 415 | 113 052 | 113 058 | 113 068 | 113 073 |



Copyright International Organization for Standardization
Provided by IHS under license with ISO
No reproduction or networking permitted without license from IHS Not for Resale

**Table 9 (continued) - 512-byte sector disks: 38 groups**

| Band No. | Sectors per physical track | Tracks per band | Start Track | Data Start | Spares Start | Buffer Start | Test Start | Buffer Start |
|---|---|---|---|---|---|---|---|---|
| 31 | 82 | 2 624 | 113 088 | 113 103 | 115 676 | 115 682 | 115 692 | 115 697 |
| 32 | 80 | 2 560 | 115 712 | 115 727 | 118 236 | 118 242 | 118 252 | 118 257 |
| 33 | 78 | 2 496 | 118 272 | 118 287 | 120 732 | 120 738 | 120 748 | 120 753 |
| 34 | 76 | 2 432 | 120 768 | 120 783 | 123 164 | 123 170 | 123 180 | 123 185 |
| 35 | 74 | 2 368 | 123 200 | 123 215 | 125 532 | 125 538 | 125 548 | 125 553 |
| 36 | 72 | 2 304 | 125 568 | 125 583 | 127 836 | 127 842 | 127 852 | 127 857 |
| 37 | 70 | 2 240 | 127 872 | 127 887 | 130 085 | 130 097 | 130 107 | NA |

### 18.4 Defect Management Areas (DMAs)

The four Defect Management Areas contain information on the structure of the User Area and on the defect management. The locations of the DMAs are shown in tables 7, 8 and 9.

Each DMA shall have a length of 21 sectors for 2 048-byte sectors, 51 sectors for 1 024-byte sectors and 93 sectors for 512-byte sectors. The addresses of the first sector of each DMA is given by table 10.

**Table 10 - Location of the DMAs**

| | **2 048-byte sectors** | | **1 024-byte sectors** | | **512-byte sectors** | |
|---|---|---|---|---|---|---|
| **DMA Number** | **Track Number** | **Sector Number** | **Track Number** | **Sector Number** | **Track Number** | **Sector Number** |
| DMA1 | 0 | 0 | 0 | 0 | 0 | 0 |
| DMA2 | 3 | 0 | 3 | 0 | 3 | 0 |
| DMA3 | 182 482 | 0 | 138 894 | 0 | 130 091 | 0 |
| DMA4 | 182 485 | 0 | 138 897 | 0 | 130 094 | 0 |

For Types R/W, DOW, P-ROM, P-DOW, WO and WO-DOW the unused sector that lies after DMA2 and the unused sector that lies after DMA4, are reserved for future standardization.

Each DMA shall contain a Disk Definition Structure, a Primary Defect List (PDL) and a Secondary Defect List (SDL). The contents of the four PDLs shall be identical and the contents of the SDLs shall be identical. The only differences between the four DDSs shall be the pointers to each associated PDL and SDL.

After initialization, each DMA shall have the following contents:

- the first sector shall contain the DDS;
- the second sector shall be the first sector of the PDL for Types R/W, DOW, P-ROM, P-DOW, WO and WO-DOW;
- the SDL shall begin in the first sector following the PDL for Types R/W, DOW, P-ROM, P-DOW, WO and WO-DOW.



--`,,```,,,,````-`-`,,`,,`,`,,`---

Copyright International Organization for Standardization
Provided by IHS under license with ISO
No reproduction or networking permitted without license from IHS Not for Resale

The lengths of the PDL and SDL are determined by the number of entries in them. The contents of the remaining sectors of the DMAs after the SDL are not specified for Types R/W, DOW, P-ROM, P-DOW, WO and WO-DOW and shall be ignored during interchange.

The start address of a PDL and that of the SDL within each DDS shall reference the PDL and the SDL in the same DMA.

For Type O-ROM except for the DDS sectors, the Data fields of all sectors in the DMAs shall be set to (FF).

### 18.5 Disk Definition Structure (DDS)

The DDS shall consist of a table with a length of one sector. It specifies the method of initialization of the disk, the division of the User Area into groups, the kind of data sectors within each group, and the start addresses of the PDL and SDL. The DDS shall be recorded in the first sector of each DMA at the end of initialization of the disk. On Type O-ROM disks, the DDS shall be embossed.

For Type P-ROM and P-DOW the values of some of the DDS parameters are specified by the manufacturer and recorded in the control SFP Zones.

Tables 11, 12 and 13 summarize the information that shall be recorded in each of the four DDSs.



--`,,```,,,,````-`-`,,`,,`,`,,`---

Copyright International Organization for Standardization
Provided by IHS under license with ISO
No reproduction or networking permitted without license from IHS Not for Resale

**Table 11 - Byte assignment of the Disk Definition Structure (2 048-byte sector)**

| Byte No. | Content | Mandatory Settings | | | |
|---|---|---|---|---|---|
| | | R/W DOW | WO WO-DOW | O-ROM | P-ROM P-DOW |
| 0 | DDS Identifier | (0A) | (05) | (0A) | (0A) |
| 1 | DDS Identifier | (0A) | (05) | (0A) | (0A) |
| 2 | Reserved | (00) | (00) | (00) | (00) |
| 3 | Fully Embossed<br>Disk Certified<br>Disk Not Certified | n.a.<br>(01)<br>(02) | n.a.<br>(01)<br>(02) | (00)<br>n.a.<br>n.a. | n.a.<br>(01)<br>(02) |
| 4 | Number of Groups MSB | (00) | (00) | (00) | (00) |
| 5 | Number of Groups LSB | (18) | (18) | (18) | (18) |
| 6 | Reserved | (00) | (00) | (00) | (00) |
| 7 | Reserved | (00) | (00) | (00) | (00) |
| 8 | Reserved | (00) | (00) | (00) | (00) |
| 9 | Reserved | (00) | (00) | (00) | (00) |
| 10 | Reserved | (00) | (00) | (00) | (00) |
| 11 | Reserved | (00) | (00) | (00) | (00) |
| 12 | Reserved | (00) | (00) | (00) | (00) |
| 13 | Reserved | (00) | (00) | (00) | (00) |
| 14 | Start of PDL, Track MSB | - | - | (FF) | - |
| 15 | Start of PDL, Track | - | - | (FF) | - |
| 16 | Start of PDL, Track LSB | - | - | (FF) | - |
| 17 | Start of PDL, Sector Number | - | - | (FF) | - |
| 18 | Start of SDL, Track MSB | - | - | (FF) | - |
| 19 | Start of SDL, Track | - | - | (FF) | - |
| 20 | Start of SDL, Track LSB | - | - | (FF) | - |
| 21 | Start of SDL, Sector Number | - | - | (FF) | - |
| 22 | Band 0 Type | (01) | (04) | (02) | (01) |
| 23 | Band 1 Type | (01) | (04) | (02) | (01) or (02) |
| | : | : | : | : | : |
| 44 | Band 22 Type | (01) | (04) | (02) | (01) or (02) |
| 45 | Band 23 Type | (01) | (04) | (02) | (01) or (02) |
| 46 to 2 047 | | (00) | (00) | (00) | (00) |

In the above table, the symbol (-) means that the appropriate value is to be entered in the DDS, and n.a. means "not applicable".



--`,,```,,,,````-`-`,,`,,`,`,,`---

Copyright International Organization for Standardization
Provided by IHS under license with ISO
No reproduction or networking permitted without license from IHS Not for Resale

**Table 12 - Byte assignment of the Disk Definition Structure (1 024-byte sector)**

| Byte No. | Content | Mandatory Settings | | | |
|---|---|---|---|---|---|
| | | R/W DOW | WO WO-DOW | O-ROM | P-ROM P-DOW |
| 0 | DDS Identifier | (0A) | (05) | (0A) | (0A) |
| 1 | DDS Identifier | (0A) | (05) | (0A) | (0A) |
| 2 | Reserved | (00) | (00) | (00) | (00) |
| 3 | Fully Embossed<br>Disk Certified<br>Disk Not Certified | n.a.<br>(01)<br>(02) | n.a.<br>(01)<br>(02) | (00)<br>n.a.<br>n.a. | n.a.<br>(01)<br>(02) |
| 4 | Number of Groups MSB | (00) | (00) | (00) | (00) |
| 5 | Number of Groups LSB | (2D) | (2D) | (2D) | (2D) |
| 6 | Reserved | (00) | (00) | (00) | (00) |
| 7 | Reserved | (00) | (00) | (00) | (00) |
| 8 | Reserved | (00) | (00) | (00) | (00) |
| 9 | Reserved | (00) | (00) | (00) | (00) |
| 10 | Reserved | (00) | (00) | (00) | (00) |
| 11 | Reserved | (00) | (00) | (00) | (00) |
| 12 | Reserved | (00) | (00) | (00) | (00) |
| 13 | Reserved | (00) | (00) | (00) | (00) |
| 14 | Start of PDL, Track MSB | - | - | (FF) | - |
| 15 | Start of PDL, Track | - | - | (FF) | - |
| 16 | Start of PDL, Track LSB | - | - | (FF) | - |
| 17 | Start of PDL, Sector Number | - | - | (FF) | - |
| 18 | Start of SDL, Track MSB | - | - | (FF) | - |
| 19 | Start of SDL, Track | - | - | (FF) | - |
| 20 | Start of SDL, Track LSB | - | - | (FF) | - |
| 21 | Start of SDL, Sector Number | - | - | (FF) | - |
| 22 | Band 0 Type | (01) | (04) | (02) | (01) |
| 23 | Band 1 Type | (01) | (04) | (02) | (01) or (02) |
| | : | : | : | : | : |
| 65 | Band 43 Type | (01) | (04) | (02) | (01) or (02) |
| 66 | Band 44 Type | (01) | (04) | (02) | (01) or (02) |
| 67 to 1 023 | | (00) | (00) | (00) | (00) |

In the above table, the symbol (-) means that the appropriate value is to be entered in the DDS, and n.a. means "not applicable".



Copyright International Organization for Standardization
Provided by IHS under license with ISO
No reproduction or networking permitted without license from IHS Not for Resale

**Table 13 - Byte assignment of the Disk Definition Structure (512-byte sector)**

| Byte No. | Content | Mandatory Settings | | | |
|---|---|---|---|---|---|
| | | R/W DOW | WO WO-DOW | O-ROM | P-ROM P-DOW |
| 0 | DDS Identifier | (0A) | (05) | (0A) | (0A) |
| 1 | DDS Identifier | (0A) | (05) | (0A) | (0A) |
| 2 | Reserved | (00) | (00) | (00) | (00) |
| 3 | Fully Embossed<br>Disk Certified<br>Disk Not Certified | n.a.<br>(01)<br>(02) | n.a.<br>(01)<br>(02) | (00)<br>n.a.<br>n.a. | n.a.<br>(01)<br>(02) |
| 4 | Number of Groups MSB | (00) | (00) | (00) | (00) |
| 5 | Number of Groups LSB | (26) | (26) | (26) | (26) |
| 6 | Reserved | (00) | (00) | (00) | (00) |
| 7 | Reserved | (00) | (00) | (00) | (00) |
| 8 | Reserved | (00) | (00) | (00) | (00) |
| 9 | Reserved | (00) | (00) | (00) | (00) |
| 10 | Reserved | (00) | (00) | (00) | (00) |
| 11 | Reserved | (00) | (00) | (00) | (00) |
| 12 | Reserved | (00) | (00) | (00) | (00) |
| 13 | Reserved | (00) | (00) | (00) | (00) |
| 14 | Start of PDL, Track MSB | - | - | (FF) | - |
| 15 | Start of PDL, Track | - | - | (FF) | - |
| 16 | Start of PDL, Track LSB | - | - | (FF) | - |
| 17 | Start of PDL, Sector Number | - | - | (FF) | - |
| 18 | Start of SDL, Track MSB | - | - | (FF) | - |
| 19 | Start of SDL, Track | - | - | (FF) | - |
| 20 | Start of SDL, Track LSB | - | - | (FF) | - |
| 21 | Start of SDL, Sector Number | - | - | (FF) | - |
| 22 | Band 0 Type | (01) | (04) | (02) | (01) |
| 23 | Band 1 Type | (01) | (04) | (02) | (01) or (02) |
| | : | : | : | : | : |
| 58 | Band 36 Type | (01) | (04) | (02) | (01) or (02) |
| 59 | Band 37 Type | (01) | (04) | (02) | (01) or (02) |
| 60 to 511 | | (00) | (00) | (00) | (00) |

In the above table, the symbol (-) means that the appropriate value is to be entered in the DDS, and n.a. means "not applicable".

### 18.6 Rewritable Zone

Types R/W, DOW, P-DOW and P-ROM disks shall have a Rewritable Zone. The Rewritable Zone is intended for the user to write data into. The Data field of all sectors in this zone shall not contain any embossed data.



Copyright International Organization for Standardization
Provided by IHS under license with ISO
No reproduction or networking permitted without license from IHS Not for Resale

### 18.6.1 Location

For Types R/W and DOW the Rewritable Zone shall extend from sector 0 of track 6 to the last sector of track 182 481/138 893/130 090.

For Types P-ROM and P-DOW the Rewritable Zone shall extend from sector 0 of track 6 to the last sector of the last track of the Band preceding the first Band of the Embossed Zone.

### 18.6.2 Partitioning

During initialization of the disk, the User Zone shall be partitioned into 24/45/38 consecutive groups (see tables 11, 12 and 13). Each group shall comprise tracks of data sectors followed by tracks of spare sectors.

## 18.7 Embossed Zone

Types P-ROM, P-DOW and O-ROM shall have an Embossed Zone. It shall contain data embossed by the manufacturer of the disk. The layout of all sectors in this zone shall be as specified in clause 15.

### 18.7.1 Location

For Types P-ROM and P-DOW the Embossed Zone shall start at sector 0 of the Data Start track (tables 7, 8 and 9) of the Band which follows the rewritable zone. The last track of the Embossed Zone on Types P-ROM and P-DOW shall be track 182 481/138 893/130 090.

For Type O-ROM the Embossed Zone shall start at sector 0 of track 6 and end at the last sector of track 182 481/138 893/130 090.

### 18.7.2 Partitioning

Type O-ROM shall be partitioned into 24/45/38 groups.

Types P-ROM and P-DOW shall be partitioned into 24/45/38 groups. The rewritable zone shall start in group 0. Both the Rewritable Zone and the Embossed Zone shall have been partitioned into consecutive groups constructed from the bands.

In the Embossed Zone, each group shall comprise data sectors and parity sectors. Both the data sector and the parity sector areas of all groups shall start at sector 0.

Each group shall comprise full tracks of data sectors followed by full tracks of spare sectors or parity sectors as shown in tables 7, 8 and 9.

For Types P-ROM, P-DOW, and O-ROM there may be a number of tracks remaining after the parity sector areas in each group. These remaining tracks shall be located after the track that contains the final parity sector. The Data field of any unused sector including Buffer tracks and Test tracks within the Embossed Zone shall have all user data bytes set to (FF), except tracks 182 482 to 182 487 for 2 048-byte sectors, 138 894 to 138 899 for 1 024-byte sectors, or 130 091 to 130 096 for 512-byte sectors of Types P-ROM and P-DOW the Data Fields of which, as well as the $VFO_3$ fields, shall contain no embossed data.

### 18.7.3 Parity sectors

The embossed parity sectors provide an error correction system for embossed data over the user data bytes and SWF bytes 2 049 to 2 056 or 1 025 to 1 032 or 513 to 520 of each sector in addition to the ECC. They allow the drive to correct one sector on a track that cannot be corrected by the ECC, assuring a high data integrity. If more than one sector on a track cannot be corrected by ECC, then it is not possible to recover any of these defective sectors by the use of parity sectors.

The Data field of parity sectors contain 2 056/1 032/520 parity bytes (PB), calculated as an Exclusive OR ($\oplus$) over the user data bytes and SWF bytes 2 049 to 2 056 or 1 025 to 1 032 or 513 to 520 (DB), of the data sectors on one track of the group.



Copyright International Organization for Standardization
Provided by IHS under license with ISO
No reproduction or networking permitted without license from IHS Not for Resale

The algorithm shall be

$$PB_{t,n}=DB_{t,0,n}\oplus DB_{t,1,n}\oplus ...DB_{t,j,n}$$

where

$1 \leq t \leq m$ {Number of Embossed data tracks}

$j$ = 6 or 16 or 30

$1 \leq n \leq 2\,056$ or 1 032 or 520

$PB_{T,n}$ is byte $A_n$ of Parity Sector $T$, and $DB_{t,j,n}$ is byte $A_n$ of sector j on track t of the group. $A_n$ is defined in annex F. The parity bytes are calculated over the user data bytes and SWF bytes 2 049 to 2 056 or 1 025 to 1 032 or 513 to 520, excluding the Resync bytes. The CRC, ECC, and Resync bytes as defined in annex F shall be required with each parity sector.

The parity sectors for each track of the group shall be stored consecutively in the sectors allocated to them in each Band, starting with the first sector. The first parity sector of a Band is associated with the first track of the data sectors of the same Band, the second parity sector is associated with the second track of the data sectors, and so on until all tracks with data sectors have an associated Parity Sector. The contents of the Data field of the unused parity sectors shall be set to (FF) and shall contain data complying with the layout as given in annex F.

### 18.8 Write Once Zone

Types WO and WO-ROM shall contain a Write Once Zone. The Write Once Zone is intended for the user to write data into. The Data field of all sectors in this zone shall not contain any embossed data.

#### 18.8.1 Location

The Write Once Zone shall extend from sector 0 of track 6 to the last sector of track 182 481/138 893 /130 090. Every band of these disks shall be recorded in bytes 22 to 45/66/59 of the DDS as being Write Once.

#### 18.8.2 Partitioning

During initialization of the disk, the Write Once Zone shall be partitioned into 24/45/38 consecutive groups. Each band shall comprise full tracks of data sectors followed by full tracks of spare sectors.

## 19 Defect Management in the Rewritable and Write Once Zones

Defective sectors on the disk shall be replaced by good sectors according to the defect management scheme described below. Each side of the disk shall be initialized before use. This International Standard allows media initialization with or without certification. Defective sectors found during certification are handled by a Sector Slipping Algorithm. Defective sectors found after initialization are handled by a Linear Replacement Algorithm. The total number of defective sectors on a side of the disk, replaced by both algorithms, shall not be greater than 4 095/4 095/4 095.

### 19.1 Initialization of the disk

During initialization of the disk, the four DMAs are recorded prior to the first use of the disk. The User Area is divided into Bands, each containing data sectors and spare sectors. Media initialization can include a certification of the rewritable Bands and Write Once Bands, whereby defective sectors are identified and skipped.

For Types WO and WO-DOW disks only a single initialization is allowed. Once the DMAs are recorded, it indicates that the disk is initialized and that no further initialization is permitted. All sectors in the write once zone of Type WO shall be in the erased state at the end of initialization. For Type WO-DOW, the state of the sectors in the write once zone is indifferent due to the direct overwrite capability.



--`,,```,,,,````-`-`,,`,,`,`,,`---
Copyright International Organization for Standardization
Provided by IHS under license with ISO
No reproduction or networking permitted without license from IHS Not for Resale

All DDS parameters shall be recorded in the four DDS sectors. The PDL and SDL shall be recorded in the four DMAs. The content of the PDLs and SDLs are shown in tables 14 and 15.

### 19.2 Certification

If the disk is certified, the certification shall be applied to all sectors of rewritable Bands in the User Area. The method of certification is not stated by this International Standard. It may involve erasing, writing, and reading of sectors. Defective sectors found during certification shall be handled by the Slipping Algorithm (see 19.2.1) or, where applicable, by the Linear Replacement Algorithm (see 19.2.2). Defective sectors shall not be used for reading or writing. Guidelines for replacing defective sectors are given in annex U.

#### 19.2.1 Slipping Algorithm

The Slipping Algorithm shall be applied individually to each and every band on the disk if certification is performed.

A defective data sector found during certification shall be replaced by the first good sector following the defective sector, and so causes a slip of one sector towards the end of the band. The last data sectors will slip into the spare sector area. The address of the defective sector is written in the PDL. If no defective sectors are found during certification, an empty PDL shall be recorded.

The addresses of spare sectors, beyond the last data sector slipped into the spare area (if any), which are found to be defective during certification shall be recorded in the PDL. Thus, the number of available spare sectors is diminished accordingly.

If the spare sector area of a band becomes exhausted during certification, the defective sector shall be handled by the Linear Replacement Algorithm. This process involves assigning a replacement sector from the spare area of another band and cannot be accomplished until the other band has been certified. This is due to the fact that the next available spare sector is not known until its group is certified, i.e. the Slipping Algorithm has been applied.

#### 19.2.2 Linear Replacement Algorithm

The Linear Replacement Algorithm is used to handle defective sectors found after certification. It is also used during certification in the event of the spare area of a Band becoming exhausted.

The defective sector shall be replaced by the first available spare sector of the Band. If a replacement sector is found to be defective, it shall be replaced by the next available spare sector in that band. The addresses of the defective sector and the replacement sector shall be recorded in the SDL.

If there are no spare sectors left in the Band, the defective sector shall be replaced by the first available spare sector of another Band.

The addresses of sectors already recorded in the PDL shall not be recorded in the SDL.

If a replacement sector listed in the SDL is later found to be defective, it shall be dealt with by making a new entry in the SDL indicating a replacement sector for that defective sector.

### 19.3 Disks not certified

The Linear Replacement Algorithm is also used to handle sectors found defective on disks which have not been certified.

The defective sector shall be replaced by the first available spare sector of the Band. If there are no spare sectors left in the Band, the defective data and spare sector shall be replaced by the first available spare sector of another Band. The addresses of the defective sector and the replacement sector shall be recorded in the SDL. If a replacement sector is found to be defective, it shall be replaced by the next available spare sector in that Band.

If a replacement sector listed in the SDL is later found to be defective, it shall be dealt with by making a new entry in the SDL indicating a replacement sector for that defective sector.



Copyright International Organization for Standardization
Provided by IHS under license with ISO
No reproduction or networking permitted without license from IHS Not for Resale

### 19.4 Write procedure

When writing or reading data in the sectors of a Band, all defective sectors listed in the PDL shall be skipped and the data shall be written in the next data sector according to the Slipping Algorithm. If a sector to be written is listed in the SDL, the data shall be written in the spare sector pointed to by the SDL, according to the Linear Replacement Algorithm.

For Type WO after initialization, all sectors in the User Area shall be in the erased state. Erasing of sectors in the User Area after initialization is not permitted. For Type WO-DOW, the state of the sectors in the User Area is indifferent due to the direct overwrite capability, and erasing after initialization is not allowed.

Before writing a sector in the User Area of a Types WO and WO-DOW, it shall be determined whether or not the sector has been written. If the sector has been written, a write operation is not permitted. During write operations, sectors shall always be recorded with CRC and ECC, and the 8 SWF bytes as specified by this International Standard. See also annex Y for guidelines for the use of Types WO and WO-DOW.

### 19.5 Primary Defect List (PDL)

The PDL shall consist of bytes specifying

- the length of the PDL,
- the sector addresses of defective sectors, identified at initialization, in ascending order of track and sector addresses.

Table 14 shows the PDL byte layout. All remaining bytes of the last sector in which the Primary Defect List is recorded, shall be set to (FF). If no defective sectors are detected, then the first defective sector address is set to (FF) and bytes specifying the number of entries are set to (00).

During initialization, a PDL shall be recorded; this PDL may be empty.



--`,,```,,,,````-`-`,,`,,`,`,,`---
Copyright International Organization for Standardization
Provided by IHS under license with ISO
No reproduction or networking permitted without license from IHS Not for Resale

**Table 14 - Primary Defect List**

| Byte No. | Description |
|---|---|
| 0 | (00) PDL Identifier |
| 1 | (01) PDL Identifier |
| 2 | Number of entries MSB (each entry is 4 bytes long) |
| 3 | Number of entries LSB |
| | (If bytes 2 and 3 are (00), byte 3 is the end of the PDL) |
| 4 | Address of the first defective sector (track number MSB) |
| 5 | Address of the first defective sector (track number) |
| 6 | Address of the first defective sector (track number LSB) |
| 7 | Address of the first defective sector (sector number) |
| . | . |
| . | . |
| . | . |
| n-3 | Address of the ((n-3)/4th) defective sector (track number MSB) |
| n-2 | Address of the ((n-3)/4th) defective sector (track number) |
| n-1 | Address of the ((n-3)/4th) defective sector (track number LSB) |
| n | Address of the ((n-3)/4th) defective sector (sector number) |

### 19.6 Secondary Defect List (SDL)

The SDL is used to record the addresses of data and spare sectors which have become defective after initialization and those of their respective replacements. Eight bytes are used for each entry. The first 4 bytes specify the address of the defective sector and the next 4 bytes specify the address of the replacement sector.

The SDL shall consist of bytes identifying the SDL, specifying the length of the SDL, and of a list containing the addresses of defective sectors and those of their replacement sectors. The addresses of the data and spare defective sectors shall be in ascending order. Table 15 shows the SDL layout. All remaining bytes of the last sector in which the SDL is recorded shall be set to (FF). An empty SDL shall consist of bytes 0 to 3 as shown in table 15; bytes 2 and 3 shall be set to (00).



Copyright International Organization for Standardization
Provided by IHS under license with ISO
No reproduction or networking permitted without license from IHS Not for Resale

**Table 15 - Secondary Defect List**

| Byte No. | Description |
|---|---|
| 0 | (00) SDL Identifier |
| 1 | (02) SDL Identifier |
| 2 | Number of addresses in the SDL, MSB (each entry is 8 bytes long) |
| 3 | Number of addresses in the SDL, LSB<br>(If bytes 2 and 3 are set to (00), byte 3 is the end of the SDL) |
| 4 | Address of the first defective sector (track number, MSB) |
| 5 | Address of the first defective sector (track number) |
| 6 | Address of the first defective sector (track number, LSB) |
| 7 | Address of the first defective sector (sector number) |
| 8 | Address of the first replacement sector (track number, MSB) |
| 9 | Address of the first replacement sector (track number) |
| 10 | Address of the first replacement sector (track number, LSB) |
| 11 | Address of the first replacement sector (sector number) |
| . | . |
| . | . |
| . | . |
| *n*-7 | Address of the last defective sector (track number, MSB) |
| *n*-6 | Address of the last defective sector (track number) |
| *n*-5 | Address of the last defective sector (track number, LSB) |
| *n*-4 | Address of the last defective sector (sector number) |
| *n*-3 | Address of the last replacement sector (track number, MSB) |
| *n*-2 | Address of the last replacement sector (track number) |
| *n*-1 | Address of the last replacement sector (track number, LSB) |
| *n* | Address of the last replacement sector (sector number) |

# Section 4 - Characteristics of embossed information

## 20 Method of testing

The format of the embossed information on the disk is defined in clauses 13 to 18. Clauses 21 to 24 specify the requirements for the signals from grooves, Headers, embossed data, and Control Track PEP marks, as obtained when using the Reference Drive specified in clause 9.

Clauses 21 to 24 specify the average quality of the embossed information over the sector recorded according to the sector format defined in clause 15 and 16. Local deviations from the specified values, called defects, can cause tracking errors, erroneous Headers, or errors in the Data fields. These errors are covered in section 6.

### 20.1 Environment

All signals specified in clauses 21 to 24 shall be within their specified ranges with the cartridge in any environment in the range of allowed operating environments defined in 8.1.2.

### 20.2 Use of the Reference Drive

All signals specified in clauses 21 to 24 shall be measured in the indicated channels of the Reference Drive. The drive shall have the following characteristics for the purpose of these tests.

#### 20.2.1 Optics and mechanics

The focused optical beam shall have the properties defined in 9.2 a) to f). The disk shall rotate as specified in 9.5.



Copyright International Organization for Standardization
Provided by IHS under license with ISO
No reproduction or networking permitted without license from IHS Not for Resale

### 20.2.2 Read power

The read power is the optical power incident at the entrance surface, used when reading, and is specified as follows for the stated zones (see clause 17):

a) PEP Zone

The read power shall not exceed the value specified in 17.3.

b) SFP Zone

The read power shall be in the range given in byte 6 of the PEP Zone (see 17.3.2.1.4). The test read power shall be 1,5 mW.

c) User zone

The read power shall be in the range given in byte 21 of the SFP Zone (see 17.4.2). The test read power shall be 1,5 mW.

### 20.2.3 Read channels

The drive shall have a read Channel, in which the total amount of light in the exit pupil of the objective lens is measured. This Channel shall have the implementation as given by Channel 1 in 9.1.

### 20.2.4 Tracking

During the measurement of the signals, the focus of the optical beam shall have an axial deviation of not more than

$$e_{max}\,(\text{axial}) = 0{,}7\ \mu\text{m}$$

from the recording layer, and it shall have a radial deviation of not more than

$$e_{max}\,(\text{radial}) = 0{,}09\ \mu\text{m}$$

from the centre of a track.

## 20.3 Definition of signals

Figure 25 shows the signals specified in clauses 21 to 24.

All signals are linearly related to currents through a photodiode detector, and are therefore linearly related to the optical power falling on the detector.

$I_1$ and $I_2$ are the outputs of the two halves of the split photodiode detector in the Tracking Channel (see 9.1 and figure 25a).

Channel 1 is the sum of the two photo detectors in the optical system (see 9.1) as processed by the bottom-hold circuit and low pass filters described in annex P. $I_{IG}$ and $I_{OL}$ indicate the maximum and minimum signals of Channel 1, respectively, when the beam crosses the tracks in grooved areas without embossed recording fields. $I_{bhmax}$ and $I_{bhmin}$ indicate the maximum and minimum signals of the lower envelope of Channel 1, respectively, when the beam crosses the tracks in areas containing embossed Headers and embossed recording fields. (see figure 25b).



Copyright International Organization for Standardization
Provided by IHS under license with ISO
No reproduction or networking permitted without license from IHS Not for Resale

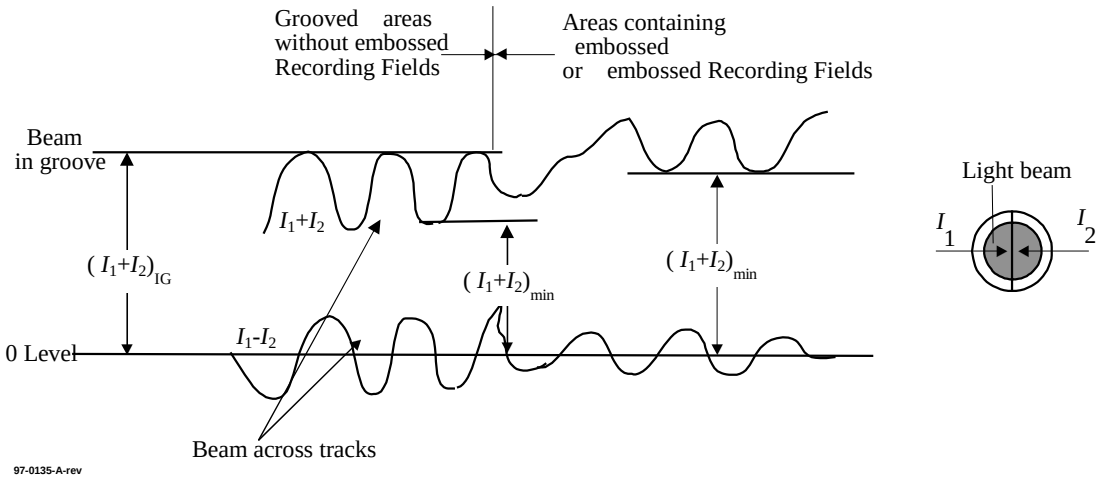


**Figure 25a - Signals from grooves in the Tracking Channel**

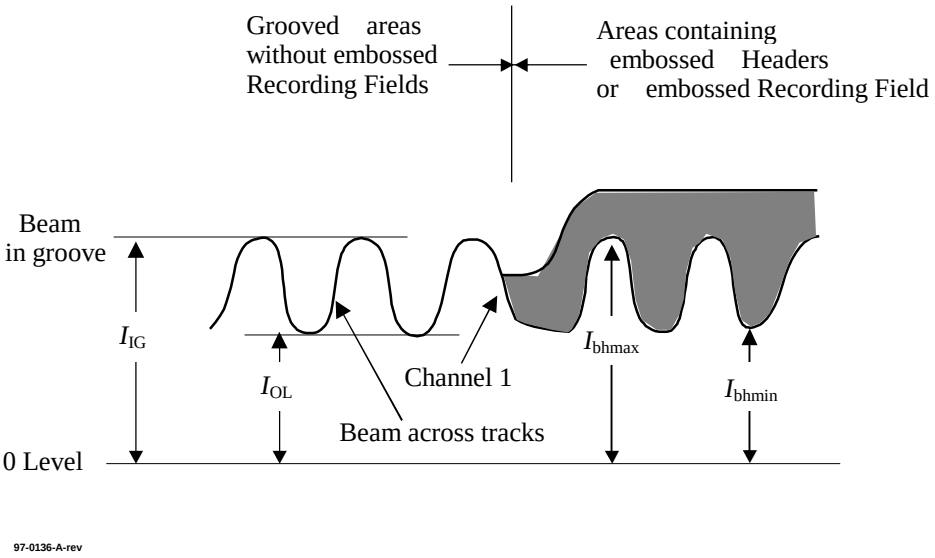


**Figure 25b - Signals from grooves in Channel 1**

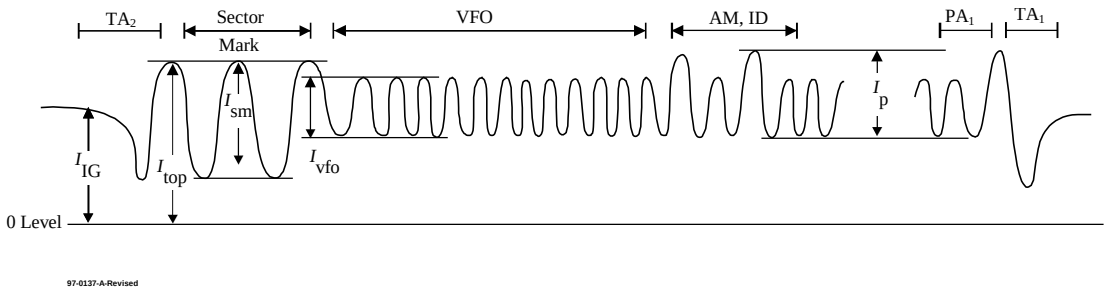


**Figure 25c - Signals from Headers in Channel 1**

**Figure 25 - Illustration of the various parameters for read characteristics**

## 21 Signal from grooves

The signals $(I_1 + I_2)$ and $(I_1 - I_2)$shall be filtered using a 5th order Bessel filter with a cut off frequency of 1,0 MHz such that frequencies above 1,0 MHz are attenuated thereby eliminating the effect of modulation due to embossed marks.



Copyright International Organization for Standardization
Provided by IHS under license with ISO
No reproduction or networking permitted without license from IHS Not for Resale

### 21.1 Cross-track signal

The cross-track signal is the sinusoidal sum signal Channel 1 in the Read Channel, when the focus of the optical beam crosses the tracks. The signal can be used by the drive to locate the centre of the tracks. The peak-to-peak value of the cross-track signal shall meet the following requirements when measured according to annex P:

a) The peak-to-peak value of the upper envelope of the cross-track signal in areas containing embossed Headers and embossed Recording fields:

$$0{,}10 \leq \frac{I_{\text{bh max}} - I_{\text{bh min}}}{I_{\text{bh max}}} \leq 0{,}30$$

Over the whole disk this ratio shall not vary by more than 3 dB in areas containing embossed Headers and embossed Recording fields.

b) The peak-to-peak value of the cross-track signal in grooved areas in the Formatted Zone without embossed Recording fields:

$$0{,}10 \leq (I_{IG} - I_{OL})/I_{IG} \leq 0{,}30$$

Over the whole disk this ratio shall not vary by more than 3 dB in areas without embossed Recording fields.

### 21.2 Push-pull signal

The push-pull signal is the sinusoidal difference signal ($I_1$ -$I_2$ ) in the Tracking Channel, when the focus of the optical beam crosses the tracks. The signal can be used by the drive for radial tracking. The peak-to-peak value of the push-pull signal shall meet the following requirements

a) in areas containing embossed Headers and embossed Recording fields:

$$0{,}10 \leq (I_1 - I_2)_{pp} / (I_1 + I_2)_{IG} \leq 0{,}30$$

b) in grooved areas in the Formatted Zone without embossed Recording fields:

$$0{,}25 \leq (I_1 - I_2)_{pp} / (I_1 + I_2)_{IG} \leq 0{,}60$$

where $(I_1 - I_2)_{pp}$ is the peak-to-peak amplitude of the differential output of the two halves of the split photodiode detector in the Tracking Channel, and $(I_1 + I_2)_{IG}$ is the signal measured in-groove.

### 21.3 Divided push-pull signal

The first term of the divided push-pull signal is the peak-to-peak amplitude derived from the instantaneous level of the differential output ($I_1$ - $I_2$) from the split photodiode detector when the light beam crosses the unrecorded or embossed recording fields of grooved tracks divided by the instantaneous level of the sum output ($I_1$ + $I_2$) from the split photodiode detector when the light beam crosses these areas.

The second term of the divided push-pull signal is the ratio of the minimum peak-to-peak amplitude derived from the instantaneous level of the differential output ($I_1$ - $I_2$) divided by the instantaneous level of the sum output ($I_1$ + $I_2$) from the split photodiode detector when the light beam crosses embossed Recording fields of grooved tracks to maximum peak-to-peak amplitude derived from the instantaneous level of the differential output ($I_1$ - $I_2$) divided by the instantaneous level of the sum output ($I_1$ + $I_2$) from the split photodiode detector when the light beam crosses the pre-formatted data area of grooved tracks.

The split photodiode detector separator shall be parallel to the projected track axis. In this measurement, the $I_1$ and $I_2$ signals shall be provided by the split photodiode detector. The tracking servo shall be operating in open-loop mode during this measurement.



Copyright International Organization for Standardization
Provided by IHS under license with ISO
No reproduction or networking permitted without license from IHS Not for Resale

The first term shall meet the following requirements in areas containing embossed Headers and embossed Recording fields:

$$0,12 \leq [(I_1 - I_2)/(I_1 + I_2)]_{pp} \leq 0,40$$

The first term shall meet the following requirements in grooved areas without embossed data fields:

$$0,35 \leq [(I_1 - I_2)/(I_1 + I_2)]_{pp} \leq 0,70$$

The second term shall satisfy the following requirements in areas containing embossed Headers and embossed Recording fields:

$$[(I_1 - I_2)/(I_1 + I_2)]_{ppmin} / [(I_1 - I_2)/(I_1 + I_2)]_{ppmax} \geq 0,70$$

The second term shall satisfy the following requirements in areas without embossed Recording fields:

$$[(I_1 - I_2)/(I_1 + I_2)]_{ppmin} / [(I_1 - I_2)/(I_1 + I_2)]_{ppmax} \geq 0,70$$

### 21.4 Phase depth

The phase depth of the grooves equals

$$\frac{n \times d}{\lambda} \times 360$$

where:

$n$ is the index of refraction of the substrate

$d$ is the groove depth

$\lambda$ is the wavelength

The phase depth shall be less than $180^{\circ}$.

### 21.5 Track location

The tracks are located at those places on the disk where ($I_1$ - $I_2$) equals zero and ($I_1$+$I_2$) has its maximum value.

## 22 Signals from Headers

The signal obtained from the embossed Headers shall be measured in Channel 1 of the Reference Drive.

The signal from an embossed mark in the recording layer is defined as the peak-to-peak value of the modulation of the signal in Channel l caused by the mark when the beam follows a recorded track (see figure 25c).

### 22.1 Sector Mark Signals

$I_{top}$ is the peak level of the Sector Mark and shall meet the following requirement

$$0,15 \leq I_{top} \leq 0,30$$

The signal $I_{sm}$ from the Sector Mark shall meet the requirement

$$0,30 \leq I_{sm}/I_{top} \leq 0,65$$

### 22.2 VFO signals

The signal $I_{vfo}$ from the marks in the $VFO_1$ and $VFO_2$ fields shall meet the requirement

$$0,08 \leq I_{vfo} / I_{top} \leq 0,25$$

In addition, the condition



Copyright International Organization for Standardization
Provided by IHS under license with ISO
No reproduction or networking permitted without license from IHS Not for Resale

$$\frac{I_{vfo}}{I_{p\,max}} \geq 0{,}20$$

shall be satisfied within each sector, where $I_{pmax}$ is the signal with maximum amplitude in that sector from embossed mark signals of $I_p$ defined in 22.3 and $I_{vfo}$ is the peak-to-peak amplitude of the read signal from the VFO area.

### 22.3 Address Mark, ID and PA signals

The signal $I_p$ from the marks in these fields shall meet the requirements

$$0{,}08 \leq I_p / I_{top} \leq 0{,}65$$

$$\frac{I_{p\,min}}{I_{p\,max}} \geq 0{,}20$$

The second requirement applies over any Header. $I_{pmin}$ and $I_{pmax}$ are the signals with minimum and maximum amplitude in those fields.

### 22.4 Timing jitter

The header signal shall be read and detected using the read Channel circuit defined in annex H under the conditions specified in 20.2.2. The timing jitter *Jt*(H) shall be measured according to the procedure in annex J and shall meet the following requirements:

$$Jt(\mathrm{H}) \leq 0{,}10\ \mathrm{T}$$

where T is the Channel clock period, *Jt*(H) is the standard deviation (sigma) of the length in time of the leading-to-leading and trailing-to-trailing edges for each *n*T period. The ideal length corresponds to n Channel bit times T. *Jt* is illustrated in figure J.1.

All the time interval samples detected from the Header signals on the recording layer shall satisfy the condition of *Jt*(H).

### 22.5 Asymmetry

Asymmetry is the deviation between the centre levels of the signals which give maximum and minimum amplitudes $I_{pmax}$ and $I_{pmin}$ in Address Mark, ID and PA fields (see annex Q) and shall be in the range of $\pm$ 0,15.

## 23 Signals from embossed Recording fields

### 23.1 Signal amplitude

If the disk has an Embossed Zone, the Recording fields of all sectors in this zone shall contain embossed marks. The signals from these marks shall be measured in Channel 1 (see 9.1). Acceptable defects of the marks are specified in section 6. The signal from all embossed Recording fields is defined as the peak-to-peak value of the modulation of the signal.

The signal $I_p$ from marks in the Recording fields of the Embossed Zone shall meet the following requirements:

$$0{,}08 \leq I_p / I_{top} \leq 0{,}65$$

$$\frac{I_{p\,min}}{I_{p\,max}} \geq 0{,}20$$

The last requirement applies over Recording fields. $I_{pmin}$ and $I_{pmax}$ are the signals with minimum and maximum amplitude in the Recording field of a sector.



Copyright International Organization for Standardization
Provided by IHS under license with ISO
No reproduction or networking permitted without license from IHS Not for Resale

### 23.2 Asymmetry

Asymmetry is the deviation between the centre levels of the signals which give maximum and minimum amplitudes $I_{pmax}$ and $I_{pmin}$ in embossed Recording fields (see annex Q) and shall be in the range of ± 0,15.

### 23.3 Timing Jitter

The embossed data signal shall be read and detected using the read Channel circuit defined in annex H under the conditions specified in 20.2.2. The timing jitter $Jt_d$ shall be measured according to the procedure in annex J and shall meet the following requirements:

$$Jt_d \leq 0{,}10\ T$$

where T is the Channel clock period, $Jt_d$ is the standard deviation (sigma) of the length in time of the leading-to-leading and trailing-to-trailing edges for each *n*T period. *Jt* is illustrated in Annex J, figure J.1.

All the time interval samples detected from the embossed data signals on the recording layer shall satisfy the former conditions of $Jt_d$.

### 23.4 Byte Errors

The embossed data in a sector as read in Channel 1 shall not contain any byte errors that cannot be corrected by the error correction defined in 29.2.7.

## 24 Signals from Control Track PEP marks

The density of tracks and the shape of marks in the PEP Zone shall be such that the cross-track loss meets the requirement

$$\frac{I_{m\,max}}{I_{m\,min}} \leq 2{,}0$$

The signal *I* is obtained from Channel 1 (see 9.1). The signal $I_m$ is the maximum amplitude in a group of three successive marks. $I_{m\,max}$ is the maximum value and $I_{m\,min}$ is the minimum value of $I_m$ obtained over one physical track of the PEP Zone. $I_{m\,max}$ shall be greater than 0,2 $I_o$, where $I_o$ is the signal obtained from Channel 1 in an unrecorded ungrooved area. The effect of defects shall be ignored.



--`,,```,,,,````-`-`,,`,,`,`,,`---
Copyright International Organization for Standardization
Provided by IHS under license with ISO
No reproduction or networking permitted without license from IHS Not for Resale

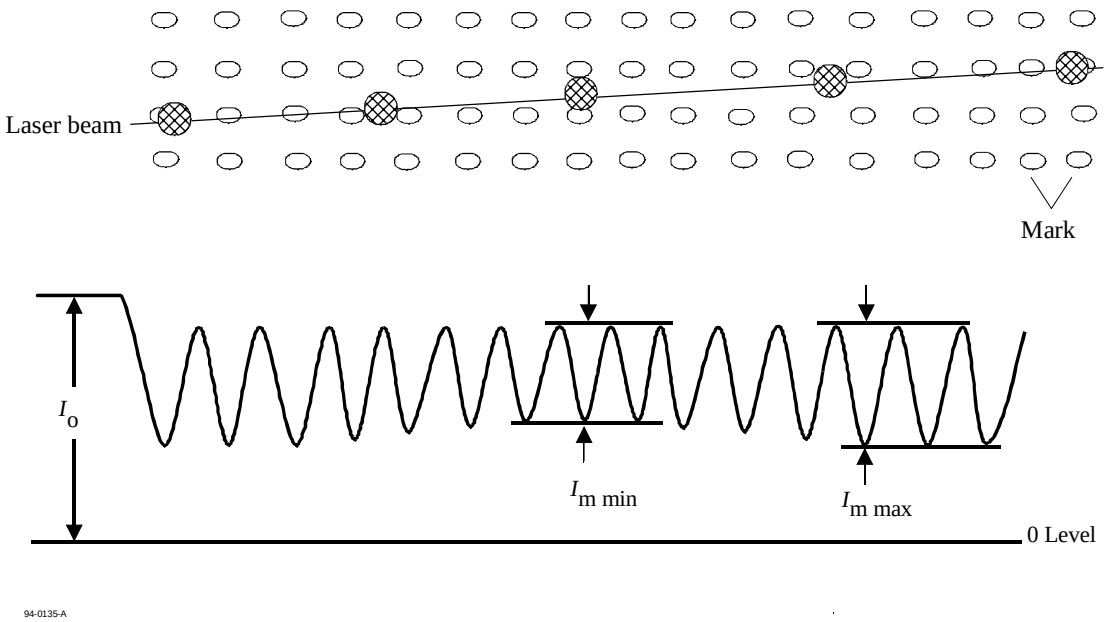


**Figure 26 - Path of the laser beam when crossing tracks and the resulting PEP signals**

## Section 5 - Characteristics of the recording layer

## 25 Method of testing

Clauses 26 to 28 describe a series of tests to assess the magneto-optical properties of the Recording layer, as used for writing and erasing data. The tests shall be performed only in the Recording field of the sectors in the Rewritable Zone. If there is no Rewritable Zone for user recording, clauses 27 to 29 shall not apply. The write, read and erase operations necessary for the tests shall be made on the same Reference Drive.

Clauses 26 to 28 specify only the average quality of the recording layer. Local deviations from the specified values, called defects, can cause write or erase problems. These defects are covered in section 6.

### 25.1 Environment

All signals in clauses 26 to 28 shall be within their specified ranges with the cartridge in any environment in the range of allowed operating environments defined in 8.1.2 except where otherwise noted.

### 25.2 Reference Drive

The write and erase tests described in clauses 26 to 28 shall be measured in Channel 2 of the Reference Drive. The drive shall have the following characteristics for the purpose of these tests.

#### 25.2.1 Optics and mechanics

The focused optical beam shall have the properties defined in 9.2 a) to f). The disk shall rotate as specified in 9.5.

#### 25.2.2 Read power

The optical power incident on the entrance surface of the disk and used for reading the information shall be in the range specified in 20.2.2.



Copyright International Organization for Standardization
Provided by IHS under license with ISO
No reproduction or networking permitted without license from IHS Not for Resale

### 25.2.3 Read Channel

The Reference Drive shall have a Read Channel which can detect magneto-optical marks in the recording layer. This Channel shall have an implementation equivalent to that given by Channel 2 in 9.3.

The edge positions in time shall be measured for testing purposes by a threshold detection method. The threshold value is referenced to the centre of the peak-to-peak envelope of the readback signal. The positive peak and negative peak signals of the envelope circuit (see annex M) shall each contain a single pole filter with a -3 dB roll-off point at 50 kHz.

### 25.2.4 Tracking

During the measurement of the signals, the focus of the optical beam shall follow the tracks as specified in 20.2.4.

### 25.2.5 Signal detection for testing purposes

The signal from the Read Channel is not equalized before detection. The signal shall be rolled off with a 3-pole Butterworth filter with a cut-off frequency of half the Channel clock frequency of the band being tested. All read testing is performed at the rotational speed of 50 Hz.

Nominally the threshold value shall be zero if the laser power calibration is perfect and there are no parameter variations. However, in some measurements the threshold value may have to be adjusted to minimize the effects of mark size changes due to parameter variations during writing.

## 25.3 Write conditions

### 25.3.1 Write pulse and power

For Types R/W, P-ROM and WO marks are recorded on the disk by pulses of optical power superimposed onto a specified bias power $P_b$ of 1,0 mW ± 0,1 mW (see annex K) at the test rotational frequency. For Types DOW, P-DOW, and WO-DOW marks are recorded on the disk by pulses of optical power $P_W$ and a specified bias power $P_e$ ± 5% at the test rotational frequency. This bias power functions as the erase power for previously written data.

The pulse shape for the purpose of testing will be a nominally rectangular pulse as shown in annex K for types R/W, P-ROM and WO with duration $T_P$ and power $P_w$. For Types DOW, P-DOW and WO-DOW the pulse shape shall be nominally rectangular on a bias power $P_b$ and with cooling gaps as shown in annex K with duration $T_P$ and power $P_W$.

$T_P$ is the full width, half maximum duration of the light pulse. $T_P$ shall be measured by a high speed photo detector at the output of the laser. $T_P$ shall be 15 ns ± 0,15 ns with a 10% to 90% rise and fall time of less than 3 ns.

The measurement of laser power shall be done in pulsed operation by averaging, for example one pulse every 50 ns, using a spherical radiometer. The averaging method of measuring the laser power will minimize the accumulation of pulse width and pulse amplitude tolerances.

The value of $P_W$ and $P_e$ used in any media tests shall be the one measured for that particular piece of media using the method in 25.3.3. Values within 5 % of $P_W$ and $P_e$ that were measured by the media manufacturer when using a pulse width of $T_p$ at radii 30 mm, 45 mm, and 60 mm on their typical media shall be recorded in the SFP zone.

2T, 4T and 8T marks shall be used in all media tests. The 2T mark shall be formed with a single $T_p$ ns pulse that starts at the beginning of a channel clock period. The 4T and 8T marks are formed with two and four identical $T_p$ ns pulses respectively, each starting at the beginning of a channel clock period, and spaced exactly two channel clock periods apart. All pulses shall have the same power $P_w$ and $P_e$ and duration $T_p$.



--`,,```,,,,````-`-`,,`,,`,`,,`---
Copyright International Organization for Standardization
Provided by IHS under license with ISO
No reproduction or networking permitted without license from IHS
Not for Resale

### 25.3.2 Write magnetic field

The requirements of all tests shall be met for all magnetic field intensities, at the recording layer during recording, in the range from 16 000 A/m to 32 000 A/m except where otherwise noted.

The write magnetic fields for all tests, pointing in the north to south direction, shall be within 15° from the normal to the Disk Reference Plane P, in the direction of the incident beam, i.e. from the entrance surface to the recording layer.

### 25.3.3 Pulse power determination

The following procedure shall be used by the media manufacturer to measure the value of the 4T pulse power $P_W$ that is recorded in the SFP zone.

Erase and write several tracks and 30 mm, 45 mm and 60 mm radii of the disk under test by repeatedly writing the following test pattern:

| | | | | |
|---|---|---|---|---|
| Run Length: | 2T | 6T | 4T | 6T |
| Mark or Space: | M | S | M | S |

The recording shall be done at a media temperature of 25°C ± 1°C, a magnetic field intensity of 24 000 A/m ± 5 % and at the test rotational speed.

Read and detect the readback signal with the detection method given in 25.2.5. Adjust focus for maximum readback signal amplitude using the 2T mark and set the threshold at 50 % of the peak-to-peak signal amplitude for this test. Vary the focus ± 0,25 μm and check the output for best $E_{th}$.

Measure the average distance between edges, namely $L_2$, $L_4$ and $L_6$ for the 2T, 4T and 6T runs respectively, using a TIA repeated for 30 mm, 45 mm, and 60 mm radii. Averaging shall be done using $10^5$ independent time interval samples on several tracks at each radial location. Note that the 6T distribution on the TIA will in general be bimodal. The amount of bimodality depends on the thermal properties of the media. The value of $L_6$ is the mean of this bimodal distribution.

Adjust $P_W$ power so that $L_6$ is as close to 6T as possible. Since the length of $L_6$ can be minimized at two points, the $P_W$ power recorded in the SFP zone shall be at a point where the $L_6$ is decreasing in length as the write power is increased.

### 25.3.4 Media power sensitivity

The pulse power $P_W$ is the upper bound of the power required to form 4T marks as a function of pulse duration $T_p$. $P_W$ is given by the reciprocity relationship

$$P_w = C\left(\frac{1}{T_p} + \frac{1}{\sqrt{T_p}}\right) \text{mW}$$

The following formula shall be used by the media manufacturer to measure the value of the media power sensitivity $C$ using the $T_p$ and $P_w$ data from 25.3.3 (see also annex Z):

$$C = P_w \times \frac{T_p \times \sqrt{T_p}}{T_p + \sqrt{T_p}}$$



Copyright International Organization for Standardization
Provided by IHS under license with ISO
No reproduction or networking permitted without license from IHS Not for Resale

The value for *C* shall be less than 40 at 30 mm, 45 mm, and 60 mm radii for Types R/W, P-ROM and WO. The value of *C* shall be less than 50 at 30 mm, 45 mm, and 60 mm radii for Types DOW, P-DOW and WO-DOW.

### 25.4 Erase conditions

Marks are erased from the disk by a constant optical power in the presence of a magnetic field.

#### 25.4.1 Erase power

The erase power is the continuous optical power required for any given track at the entrance surface to erase marks written according to 25.3 to a specified level (see clause 28).

The continuous erase power level is recorded in the SFP zone for 30 mm, 45 mm, and 60 mm radii at the test rotational speed (see 17.4.2). For radii other than 30 mm, 45 mm, and 60 mm the values shall be linearly interpolated from the above.

The actual erase power shall be equal to the interpolated values ± 5 %.

The continuous erase power shall never exceed 10 mW.

#### 25.4.2 Erase magnetic field

The requirements of all tests on Types R/W, P-ROM, and WO shall be met for all magnetic field intensities at the recording layer during erasing in the range from 16 000 A/m to 32 000 A/m.

The erase magnetic field, pointing in the North to South direction, shall be within 15° from the normal to the Disk Reference Plane P, in the direction of the reflected beam, i.e. from the recording layer to the entrance surface.

The requirements for all tests on Types DOW, P-DOW, and WO-DOW shall be met for all write magnetic fields in the range from 16 000 A/m to 32 000 A/m.

### 25.5 Definition of signals

The signals in Channel 2 are linearly related to the difference between the currents through the photodiode detectors $K_1$ and $K_2$, and are therefore linearly related to the optical power falling on the detectors (see 9.1).

## 26 Magneto-optical characteristics

### 26.1 Figure of merit for magneto-optical signal

The figure of merit *F* is expressed as the product of *R*, sin θ and cos 2ß, where *R* is the reflectance expressed as a decimal fraction, θ is the Kerr rotation angle and ß is the ellipticity of the reflected beam. The polarity of the figure of merit is defined to be negative for a written mark in an Fe-rich Fe-Tb alloy layer and with the write magnetic field in the direction specified in 25.3.2. In this case the direction of Kerr rotation is counterclockwise as viewed from the source of the beam.

The polarity and the value of the figure of merit shall be specified in bytes 364 and 365 of the SFP Zone (see 17.4.2). This nominal value shall be:

$$0{,}002\ 5 < |F| < 0{,}005\ 2$$

The measurement of the actual value $F_m$ shall be made according to annex L. This actual value $F_m$ shall be within 12% of the nominal value.

### 26.2 Imbalance of magneto-optical signal

The imbalance of the magneto-optical signal is the ratio of the peak-to-peak signal amplitude of the channel 2 in a sector after erased divided by the same signal written with the 2T pattern as described in 25.3.

The measurement is made in the Data field of a sector after being passed through a high pass filter of -3 dB rolloff at 1kHz and the equalizer defined in annex M.



Copyright International Organization for Standardization
Provided by IHS under license with ISO
No reproduction or networking permitted without license from IHS Not for Resale

The phase retarder in the optical system shall be in the neutral position (see 9.1). Imbalance can be caused by birefringence of the disk.

The imbalance shall not exceed 0,2 throughout the environment operating range.

The effect of headers through the filters must be removed by a technique such as gating or sample-and-hold of the signal.

## 27 Write characteristics

If there is no Rewritable Zone for user recording, clauses 27 to 29 shall not apply.

### 27.1 Resolution

$I_L$ is the peak-to-peak value of the signal obtained in Channel 2 (see 9.2) from 8T marks and 8T spaces written under any of the conditions given in 25.3, the longest interval allowed by the RLL(1,7) code for each zone, and read under the conditions specified in 20.2.2 c).

$I_H$ is the peak-to-peak value of the signal obtained in Channel 2 from 2T marks and 2T spaces written under the conditions given in 25.3, the lowest interval allowed by the RLL(1,7) code for each zone ± 0,1 MHz, and read under the condition specified in 20.2.2 c).

The resolution $I_H/I_L$ (see figure 27) shall not be less than 0,20 within any sector. It shall not vary by more than ± 0,1 over a track.

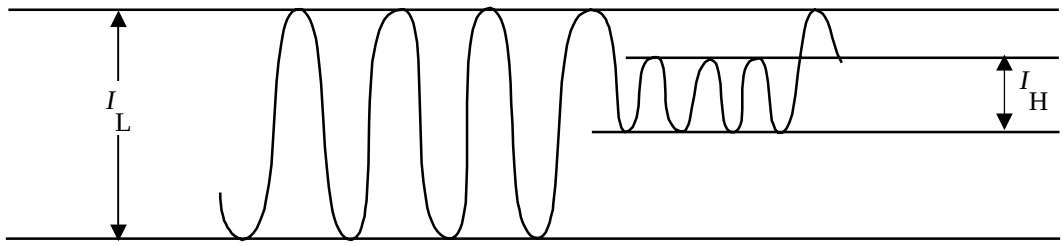


97-0128-A

**Figure 27 - Definition of $I_L$ and $I_H$**

### 27.2 Narrow-band signal-to-noise ratio (NBSNR)

The narrow-band signal-to-noise ratio is the ratio of the signal level to the noise level of a specified pattern, measured in a 30 kHz bandwidth. It shall be determined as follows.

Write a series of 2T marks followed by 2T spaces in the Recording field of a series of sectors at a frequency $f_0$ of the highest frequency allowed by the RLL(1,7) code for each zone ± 0,1 MHz. The write conditions shall be as specified in 25.3.1.

Read the Recording fields in Channel 2 with the Read Channel under the conditions specified in 25.2 using a spectrum analyzer with a bandwidth of 30 kHz. Measure the amplitudes of the signal and the noise at the frequency $f_0$ as indicated in figure 28. The measurements shall be corrected for the effect of the Header fields and for any instrumentation error in order to obtain the value for the Recording field only.

The narrow- band signal-to-noise ratio is

$$20 \log_{10} \frac{\text{signal level}}{\text{noise level}}$$

The narrow band signal-to-noise ratio shall be greater than 45 dB for all tracks in any sector in the Rewritable Zone for all allowed values of the write magnetic field and for all phase differences between -15° and +15° in the optical system as defined in 9.1.



--`,,```,,,,````-`-`,,`,,`,`,,`---

Copyright International Organization for Standardization
Provided by IHS under license with ISO
No reproduction or networking permitted without license from IHS Not for Resale

Note - It is permitted to use a spectrum analyzer with a bandwidth of 3 kHz and to convert the measured value to that for a 30 kHz value.

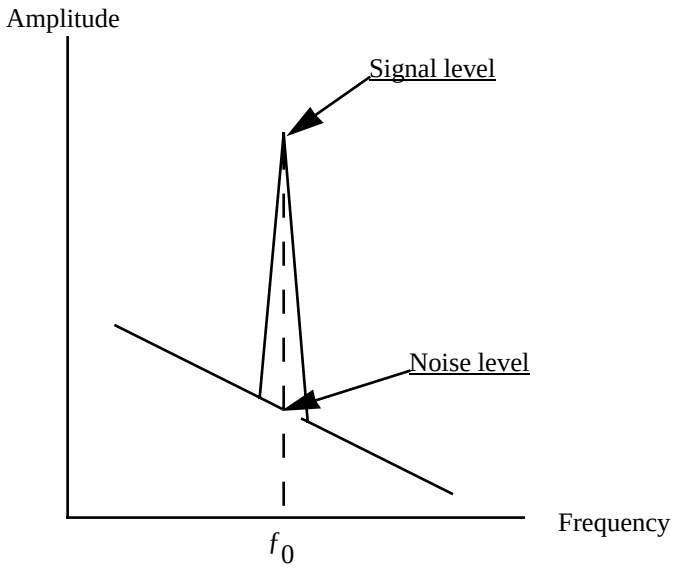


**Figure 28 - Amplitude versus frequency for the magneto-optical signal**

### 27.3 Cross-talk ratio

The cross-talk ratio definition and measurement procedure describe the entities to be measured in terms of physical tracks. These physical tracks can consist of one or more logical tracks (see 13). The number of logical tracks involved in the measurement must be adjusted for the Band in which the measurement is made.

#### 27.3.1 Rewritable track test method

For rewritable tracks the test on cross-talk shall be carried out on any group of five adjacent unrecorded physical tracks, designated (*n*-2), (*n*-1), *n*, (*n*+1), (*n*+2), in the Rewritable Zone. Erase the recording field of each of the sectors in these tracks.

Write a series of 2T marks followed by 2T spaces at a frequency f1 for each zone ± 0,1 MHz in the Recording field of the sectors in track *n*. The write conditions shall be as specified in 25.3.

Read the Recording fields of the sectors in the tracks (*n*-1), *n* and (*n*+1) under the conditions specified in 25.2.2 and 25.2.3.

The cross-talk from a track n to track (*n*-1) and to track (*n*+1) shall be lower than -26 dB.

### 27.4 Timing Jitter

The timing jitter can be obtained from the TIA data in 25.3.3 with the equalizer defined in annex M. Measure the length in time of the leading-to-leading and trailing-to-trailing edges of the detected data from the 2T mark ($L_2$) followed by 6T space ($L_6$), and 6T space ($L_6$) followed by 2T mark ($L_2$) with TIA. The measurements shall be made using $10^5$ independent time interval samples on several tracks at each radial location.

The value of timing jitter (due to the media) shall be less than 10 % of the time period T of one channel bit for 30 mm, 45 mm and 60 mm radii.



Copyright International Organization for Standardization
Provided by IHS under license with ISO
No reproduction or networking permitted without license from IHS Not for Resale

### 27.5 Media thermal interaction

The following formulas shall be used by the media manufacturer to measure the value of the media thermal interaction that is recorded in the SFP zone. The formulas use the $L_2$, $L_4$ and $L_6$ measurement data from 23.3.3.

First calculate the effective channel clock period T of the measurements:

$$T = \frac{L_2 + L_4 + 2 \times L_6}{18}$$

This T shall be checked to make sure that it has the correct value for the band in which the recording is done.

Calculate and record the thermal interaction error $E_{th}$ at r = 30 mm for Types R/W, P-ROM and WO, or $E_{th2}$ for Types DOW, P-DOW and WO-DOW using the following formula:

$$E_{\text{th}} \text{ or } E_{\text{th2}} = \frac{(L_4 - L_2 - 2 \times T)}{T} \times 100\% \text{ of T}$$

The value for $E_{th}$ or $E_{th2}$ shall be less than 27% of the channel clock period T at r=30 mm.

For Types DOW, P-DOW and WO-DOW an additional thermal interaction error is determined at r = 30 mm only. This thermal interaction error $E_{th1}$ is measured identically to $E_{th2}$ as described in 25.3.1 to 25.3.3 and this clause with the exception of the cooling gaps (i.e. the write pulses are fully surrounded by the bias power $P_b$).

The value for $E_{th1}$ shall be less than 45 % of the Channel clock period T at r=30 mm.

## 28 Erase power determination

This procedure shall be used by the media manufacturer to determine the erase powers that are recorded in the SFP zone. The erase power is the continuous power level for the given radius and rotational speed that is sufficient to erase the current track without erasing the adjacent track.

For Types R/W, P-ROM and WO the conditions for the erase power measurement are that the media temperature is 25 ºC ± 1 ºC, and the magnetic field intensities at the recording layer has a value of 24 000 A/m ± 1 200 A/m at the test rotational speed.

For Types R/W, P/ROM, and WO erase four adjacent tracks *n*, *n*+1, *n*+2, and *n*+3 in the User Zone with a relatively high erase power. Write a 2T tone on track *n*+1 and a 4T tone on track *n*+2 under the conditions given in 25.3.1. Erase track *n*+1 with the erase power to be tested. Measure the signal amplitude on both tracks *n*+1 and *n*+2 with a spectrum analyzer.

Perform this test sequence with an initial low erase test power and increase the erase test power by 0,5 mW each time the test is repeated. Plot the track *n*+1 and track *n*+2 signal amplitudes as a function of the erase test power. Choose the erase power to be half way between the erase power where the track *n*+2 signal amplitude drops by 3 dB and the power where the track *n*+1 signal amplitude first reaches the media limited noise floor.

For Types DOW, P-DOW and WO-DOW the procedure is:

a) Erase three consecutive tracks using an estimated erase power $P_e$;

b) Write an 8T mark and 8T space tone on the centre track of the three tracks using $T_p$ ns pulses, an estimated power value of $P_W$ and a continuous bias power of 3 mW. The four pulses used to write the 8T mark are spaced 2T apart from leading edge to leading edge;

c) Detect the written 8T mark/space tone with a threshold (slice level) detector where the threshold is set at the middle value of the 8T mark peak to peak signal amplitude;



Copyright International Organization for Standardization
Provided by IHS under license with ISO
No reproduction or networking permitted without license from IHS Not for Resale

d) Adjust $P_W$ until the detected mark and space lengths are exactly 8T by repeating steps a) to d) iteratively. A separate erase using the estimated erase power is required for each iteration;

e) Erase the now optimal 8T mark/space tone starting with a low value of erase power and increasing its value until the read back signal is 40 dB below its original level. Before each erase, rewrite the track with the power $P_W$ determined in step d), after a separate erase with the estimated power as in step a);

f) Repeat the erasure steps a) to e) until a repeatable value of erase power is obtained within ± 0,1 mW. If a repeatable value of this accuracy cannot be obtained, several consecutive values should be averaged to obtain a suitable estimate within this tolerance.

# Section 6 - Characteristics of user data

## 29 Method of testing

Clauses 30 and 31 describe a series of measurements to test conformance of the user data on the disk with this International Standard. It checks the legibility of both embossed and user-written data. The data is assumed to be arbitrary. The user-written data may have been written by any drive in any environment. The read tests shall be performed on the Reference Drive.

Whereas clauses 20 to 28 disregard defects, clauses 30 and 31 include them as unavoidable deterioration of the read signals. The gravity of a defect is determined by the correctability of the ensuing errors by the Error Detection and Correction circuit in the read Channel defined below. The requirements in clauses 30 and 31 define a minimum quality of the data, necessary for data interchange.

### 29.1 Environment

All signals specified in clauses 30 and 31 shall be within their specified ranges with the cartridge in any environment in the range of allowed operating environments defined in 8.1.2. It is recommended that before testing the entrance surface of the optical disk shall be cleaned according to the instructions of the manufacturer of the disk.

### 29.2 Reference Drive

All signals specified in clauses 30 and 31 shall be measured in the indicated channels of the Reference Drive. The drive shall have the following characteristics for the purpose of these tests:

#### 29.2.1 Optics and mechanics

The focused optical beam shall have the properties specified in 9.2 a) to f). The disk shall rotate as specified in 9.5.

#### 29.2.2 Read power

The optical power incident on the entrance surface of the disk (used for reading the information) shall be in the range specified in 20.2.2.

#### 29.2.3 Read Channel

The read amplifiers after the photodiode detectors in Channels 1 and 2 shall be as specified in 9.3.



Copyright International Organization for Standardization
Provided by IHS under license with ISO
No reproduction or networking permitted without license from IHS Not for Resale

### 29.2.4 Mark Quality

The signals from both read amplifiers shall be converted from analog to binary with an edge detector as defined in annex H. The output signals from Channels 1 and 2 shall be filtered with the specified equalization and low-pass filter, and compared with their threshold levels of the comparator which shall be between 0,35 and 0,65 for the threshold fractional values. The threshold levels shall be adjusted to minimize the maximum offset (or bias) of the mark and space intervals from their desired (or true) values of 2T, 3T .... 7T, 8T. The output signals from the comparator are converted to binary signals with the edge detector. (See also annex M).

The timing jitter in this section is defined as the standard deviation of the separately measured time intervals of leading-to-leading and trailing-to-trailing edges excluding outlying observations by defects, using a time interval analyzer with the output signals from the edge detector of the marks and spaces in a sector. Therefore, independent interval samples for this measurement are limited by the number of marks and spaces in a sector. The timing jitters shall be expressed as a percentage of Channel bit time T.

The converter for Channel 1 shall operate correctly for analog signals from embossed marks with amplitudes as determined by clauses 22 and 23.

The converter for Channel 2 shall operate correctly for analog signals from user-written marks with an amplitude as determined by clauses 26 and 27.

### 29.2.5 Channel bit clock

The signals from the analog-to-binary converters shall be virtually locked to the Channel bit clock/clocks which provides/provide the Channel bit windows of 0,70 T effective width for timing the leading and/or trailing edges of the binary signals. Channel bit clock/clocks shall be adjusted in order to minimize the accumulated value/values of the timing errors of the leading to leading, leading to trailing, trailing to leading, and trailing to trailing edges from the Channel bit clock/clocks.

### 29.2.6 Binary-to-digital converters

The binary signals shall be correctly converted to the data bytes with the binary-to-digital converters based on the sector format and the recording code defined in clauses 15 and 16.

### 29.2.7 Error correction

Correction of errors in the data bytes shall be carried out by an error detection and correction system based on the definition in F.2 and F.3 of annex F. There shall be an additional correction system for the embossed data, based on the parity sectors as defined in 18.7.3.

### 29.2.8 Tracking

During measurement of the signals, the focus of the optical beam shall follow the tracks as specified in 20.2.4.

## 30 Minimum quality of a sector

This clause specifies the minimum quality of the Header and Recording field of a sector as required for interchange of the data contained in that sector. The quality shall be measured on the Reference Drive specified in 29.2.

A byte error occurs when one or more bits in a byte have a wrong setting, as detected by ECC and/or CRC circuits.



Copyright International Organization for Standardization
Provided by IHS under license with ISO
No reproduction or networking permitted without license from IHS Not for Resale

### 30.1 Headers

#### 30.1.1 Sector Mark

At least three of the five long marks of the Sector Mark shall have the timing specified in 15.2 and the signals shall have the amplitude specified in 22.1.

#### 30.1.2 ID fields

At least one of the two ID fields in a Header read in Channel 1 shall not have any byte errors, as checked by the CRC in the field.

### 30.2 User-written data

#### 30.2.1 Recording field

If a flag field is recorded, it shall start at 60 ± 6 Channel bits from the end of the pre-formatted header. If an ALPC field is recorded it shall start at 144 ± 6 Channel bits from the end of the pre-formatted header. When the $VFO_3$ field is recorded, it shall start at 216 ± 6 Channel bits from the end of the pre-formatted header.

The recording marks in a sector shall start at 216 ±6 Channel bits from the end of the pre-formatted header and shall end at 252 ± 48 Channel bits for 512-byte sectors, 276 ± 84 Channel bits for 1 024-byte sectors from the end of the sector and 264 ± 84 Channel bits for 2 048-byte sectors from the end of the sector.

#### 30.2.2 Byte errors

The user-written data in a sector as read in Channel 2 shall not contain any byte errors that cannot be corrected by the error correction defined in 29.2.7.

#### 30.2.3 Asymmetry

The asymmetry of the user written marks is the deviation between the centre levels of the signal which give maximum and minimum amplitudes $I_L$ and $I_H$ in a sector as read in Channel 2 (see annex Q) and shall be in the range of ± 0,15.

#### 30.2.4 Timing jitter

The user-written marks in a sector as read in Channel 2 shall have timing jitters due to the media less than 10 % of the time period T of one Channel bit.

## 31 Data interchange requirements

A disk offered for interchange of data shall comply with the following requirements (see also annex N).

### 31.1 Tracking

The focus of the optical beam shall not jump tracks unintentionally.

### 31.2 User-written data

Any sector written in the Rewritable Zone that does not comply with 30.2 shall have been replaced according to the rules of the defect management as defined in clause 19.

### 31.3 Embossed data

Any sector in the Embossed Zone that does not comply with clause 22 shall be correctable by the error correction based on the Parity sectors as defined in 18.7.3.

### 31.4 Quality of disk

The quality of the disk is reflected in the number of replaced sectors in the Rewritable Zone. This International Standard allows a maximum number of replaced sectors per side (see clause 19).



--`,,```,,,,````-`-`,,`,,`,`,,`---

Copyright International Organization for Standardization
Provided by IHS under license with ISO
No reproduction or networking permitted without license from IHS Not for Resale

# Annex A
(normative)

## Air cleanliness class 100 000

The classification of air cleanliness is based on a particle count with a maximum allowable number of specified minimum sized particles per unit volume, and on a statistical average particle size distribution.

### A.1 Definition

The particle count shall not exceed a total of 3 500 000 particles per cubic metre of a size 0,5 µm and larger.

The statistical average particle size distribution is given in figure A.1. Class 100 000 means that 3 500 000 particles per cubic metre of a size of 0,5 µm and larger are allowed, but only 25 000 particles per cubic metre of a size of 5,0 µm and larger.

It shall be recognized that single sample distribution may deviate from this curve because of local or temporary conditions. Counts below 350 000 particles per cubic metre are unreliable except when a large number of a samplings is taken.

### A.2 Test method

For particles of size in the range of 0,5 µm to 5,0 µm, equipment employing light-scattering principles shall be used. The air in the controlled environment is sampled at a known flow rate. Particles contained in the sampled air are passed through an illuminated sensing zone in the optical chamber of the instrument. Light scattered by individual particles is received by a photo detector which converts the light pulses into electrical current pulses. An electronic system relates the pulse height to particle size and counts the pulses such that the number of particles in relation to particle size is registered or displayed.

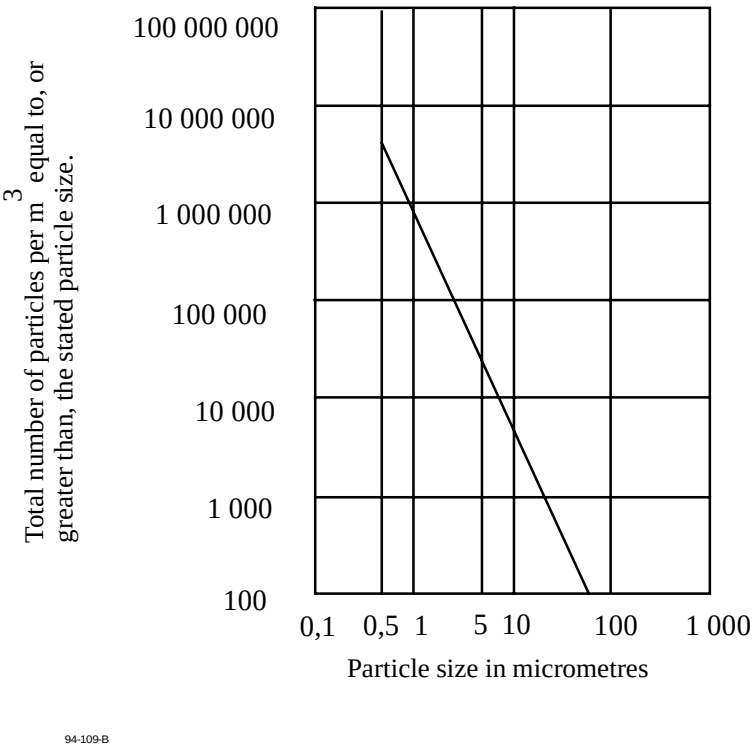


**Figure A.1 - Particle size distribution curve**



--`,,```,,,,````-`-`,,`,,`,`,,`---
Copyright International Organization for Standardization
Provided by IHS under license with ISO
No reproduction or networking permitted without license from IHS
Not for Resale

# Annex B

(normative)

## Edge distortion test

**B.1** The distortion test checks if the case is free from unacceptable distortion and protrusions along its edges. The test is made by causing the cartridge to pass through the vertical slot of a gauge while applying a specified force in addition to the gravitational pull.

**B.2** The gauge shall be made of a suitable material, e.g. of chrome-plated carbon steel. The inner surfaces shall be polished to a surface finish of 5 µm peak-to-peak.

**B.3** The dimensions shall be as follows (see figure B.1):

$A$ = 155,0 mm

$B$ = 136,0 mm ± 0,1 mm

$C$ = 10,0 mm ± 0,1 mm

$D$ = 11,40 mm ± 0,01 mm

$E$ = 11,60 mm min.

**B.4** When the cartridge is inserted vertically into the gauge, a vertical downward force F of 2,7 N maximum, applied to the centre of the top edge of the cartridge, shall cause the cartridge to pass through the gauge.



Copyright International Organization for Standardization
Provided by IHS under license with ISO
No reproduction or networking permitted without license from IHS Not for Resale

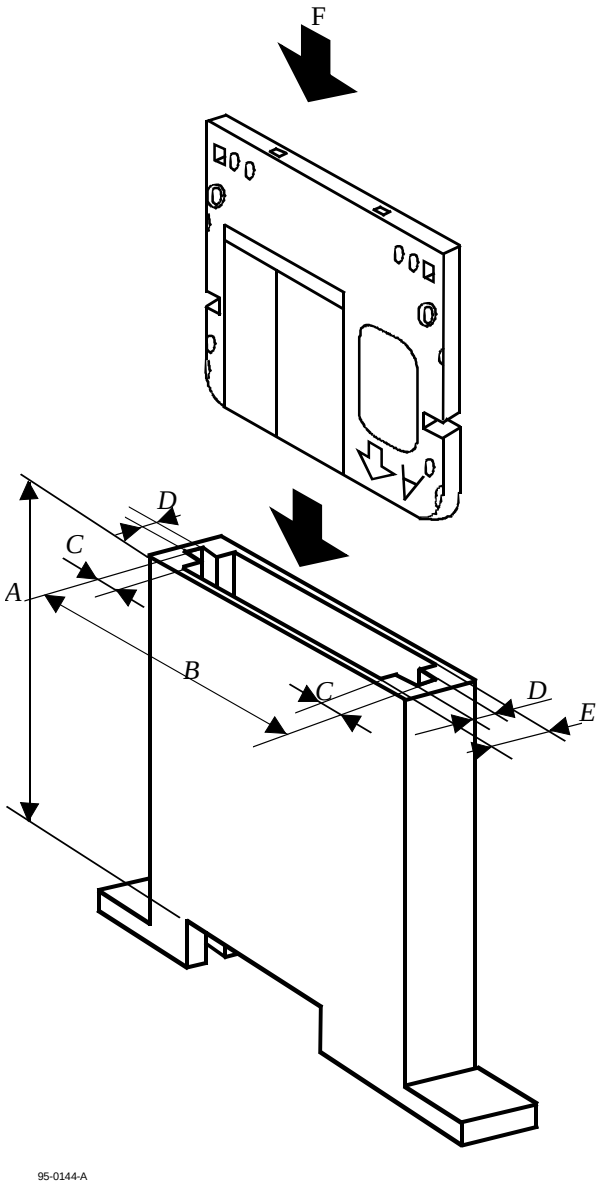


**Figure B.1 - Distortion gauge**



Copyright International Organization for Standardization
Provided by IHS under license with ISO
No reproduction or networking permitted without license from IHS
Not for Resale

# Annex C
(normative)

## Compliance test

**C.1** The compliance test checks the flatness and flexibility of the case by forcing the four reference surfaces of the cartridge into a plane.

**C.2** The location of the four reference surfaces S1, S2, S3 and S4 is defined in clause 10.5.4 and figure 5.

**C.3** The test gauge consists of a base plate on which four posts P1, P2, P3 and P4 are fixed so as to correspond to the surfaces S1, S2, S3 and S4 respectively (see figure C.1). The dimensions are as follows (see figure C.2):

Posts P1 and P2

$D_a$ = 6,50 mm ± 0,01 mm

$D_b$ = 4,00 mm $^{+\ 0,00\ \text{mm}}_{-\ 0,02\ \text{mm}}$

$H_a$ = 1,0 mm ± 0,1 mm

$H_b$ = 2,0 mm max.

Posts P3 and P4

$D_c$ = 5,50 mm ± 0,01 mm

After assembly, the upper annular surfaces of the four posts shall lie between two horizontal planes spaced 0,01 mm apart.

**C.4** The cartridge shall be placed with its reference surfaces onto the posts of the horizontal gauge. A vertical down force F of 0,4N shall be exerted on the cartridge opposite each of the four posts.

### C.5 Requirements

Under the conditions of C.4, any three of the four surfaces S1 to S4 shall be in contact with the annular surface of respective posts. Any gap between the remaining surface S and the annular surface of its post shall not exceed 0,1 mm.



Copyright International Organization for Standardization
Provided by IHS under license with ISO
No reproduction or networking permitted without license from IHS Not for Resale

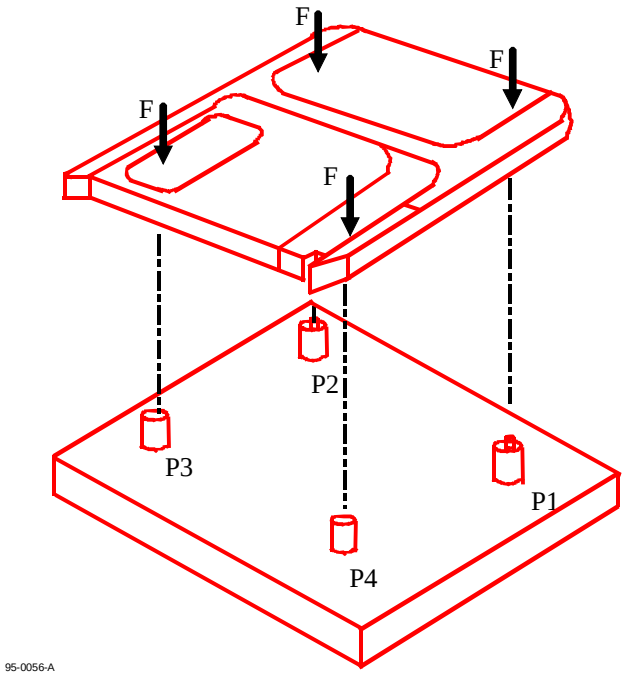


**Figure C.1 - Compliance gauge**

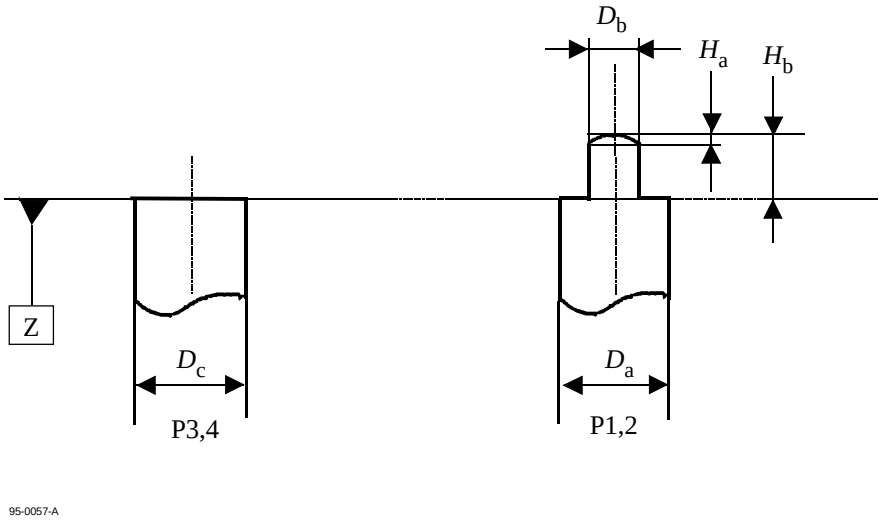


**Figure C.2 - Detail of posts**



Copyright International Organization for Standardization
Provided by IHS under license with ISO
No reproduction or networking permitted without license from IHS
Not for Resale

# Annex D
(normative)

## Test method for measuring the adsorbent force of the hub

**D.1** The purpose of this test is to determine the magnetic characteristic of the magnetizable material of the hub.

**D.2 Dimensions**

The test device (see figure D.1) consists of a spacer, a magnet, a back yoke and a centre shaft. The dimensions of test device are as follows:

$D_d$ = 8,0 mm ± 0,1 mm
$D_e$ = 20,0 mm ± 0,1 mm
$D_f$ = 19,0 mm max.
+ 0,0 mm
$D_g$ = 3,9 mm
- 0,1 mm
$H_c$ = 0,40 mm ± 0,01 mm
$H_d$ = 1,2 mm (typical, to be adjusted to meet the force requirement of D.4)

**D.3 Material**

The material of the test device shall be :

| | |
|---|---|
| Magnet | : Any magnetizable material, typically Sm-Co |
| Back yoke | : Any suitable magnetizable material |
| Spacer | : Non-magnetizable material or air gap |
| Centre shaft | : Non-magnetizable material |

**D.4 Characteristics of the magnet with back yoke**

| | |
|---|---|
| Number of poles | : 4 (typical) |
| Maximum energy product ($BH_{max}$) | : 175 kJ/m$^3$ ± 16 kJ/m$^3$ |

The characteristics of the magnet with back yoke shall be adjusted so that with a pure nickel plate of the following dimensions (see figure D.2), and the adsorbent force of this plate at the point of $H_c$ = 0,4 mm when spaced from the magnet surface shall be 9,5 N ± 0,6 N.

$D_h$ = 7,0 mm ± 0,1 mm
$D_j$ = 22,0 mm ± 0,1 mm
$H_e$ = 2,0 mm ± 0,05 mm

**D.5 Test condition for temperature**

These conditions shall be as specified in 8.1.1.



Copyright International Organization for Standardization
Provided by IHS under license with ISO
No reproduction or networking permitted without license from IHS Not for Resale

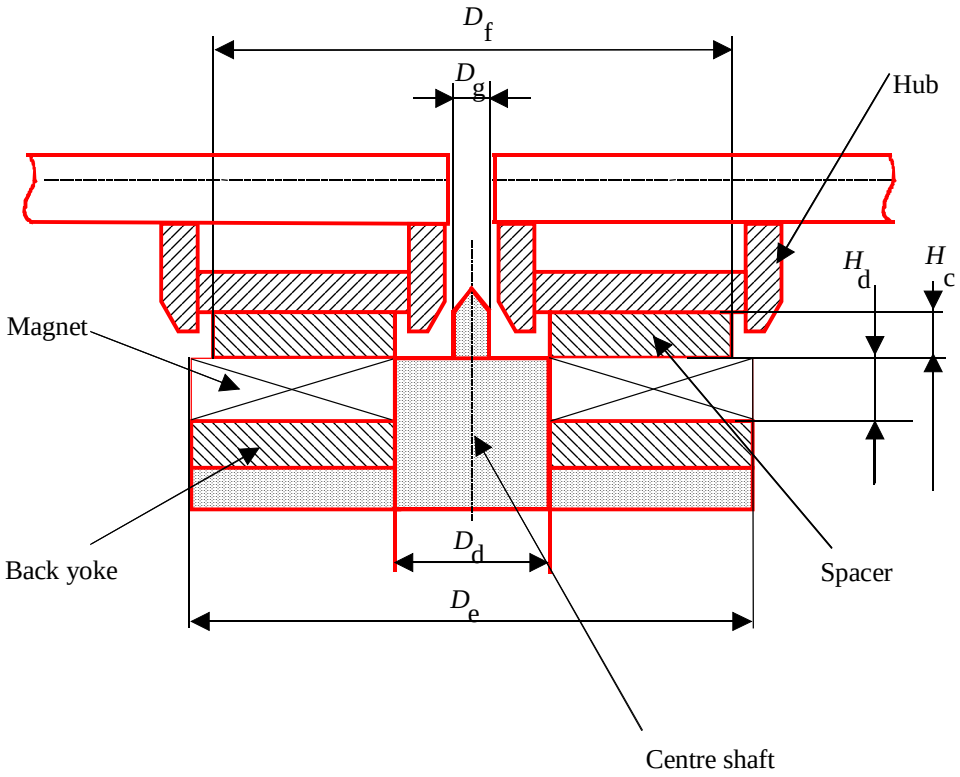


**Figure D.1 - Test device for the clamping characteristic of the hub**

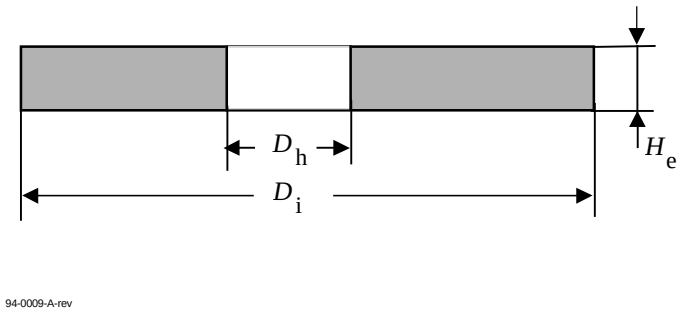


**Figure D.2 - Calibration plate of the test device**



Copyright International Organization for Standardization
Provided by IHS under license with ISO
No reproduction or networking permitted without license from IHS
Not for Resale

# Annex E
(normative)

## CRC for ID fields

The sixteen bits of the CRC shall be computed over the first three bytes of the ID field. The generator polynomial shall be

$$G(x) = x^{16} + x^{12} + x^5 + 1$$

The residual polynomial shall be

$$R(x) = \left( \sum_{i=8}^{i=23} \bar{a}_i x^i + \sum_{i=0}^{i=7} a_i x^i \right) x^{16} \mod G(x)$$

and $a_i$ denotes a bit of the first three bytes and $\bar{a}_i$ an inverted bit. The highest order bit of the first byte is $a_{23}$.

The sixteen bits $c_k$ of the CRC are defined by

$$R(x) = \sum_{k=0}^{k=15} c_k x^k$$

where $c_{15}$ is recorded as the highest order bit of the fourth byte in the ID field.



Copyright International Organization for Standardization
Provided by IHS under license with ISO
No reproduction or networking permitted without license from IHS Not for Resale

# Annex F
(normative)

**Interleave, CRC, ECC, Resync for the data field**

## F.1 Interleave

### F.1.1 Interleave for 2 048-byte sectors

The different bytes shall be designated as follows.

| | |
|---|---|
| $D_n$ | are user data bytes |
| $SWF_m$ | are SWF bytes (see 15.12.3) |
| $C_k$ | are CRC check bytes |
| $E_{s,t}$ | are ECC check bytes |

These bytes shall be ordered in a sequence $A_n$ in the order in which they shall be recorded on the disk. The order of $n$ of $D_n$ is the same as that in which they are input from the interface. Depending on the value of $n$, these elements are:

for $1 \le n \le 2\,048$ : $A_n = D_n$

for $2\,049 \le n \le 2\,056$ : $A_n = SWF_m$

for $2\,057 \le n \le 2\,060$ : $A_n = C_k$

for $2\,061 \le n \le 2\,380$ : $A_n = E_{s,t}$

where:

$m = n - 2\,048$

$k = n - 2\,056$

$s = \left[(n - 2\,061) \bmod 20\right] + 1$

$t = \text{int}\left[\frac{n - 2\,061}{20}\right] + 1$

The notation int[x] denotes the largest integer not greater than x.

The first three parts of $A_n$ are 20-way interleaved by mapping them onto a two-dimensional matrix $B_{ij}$ with 103 rows and 20 columns. Thus

for $1 \le n \le 2\,060$ : $B_{ij} = A_n$

where:

$i = 102 - \text{int}[(n-1)/20]$

$j = (n - 1) \bmod 20$



Copyright International Organization for Standardization
Provided by IHS under license with ISO
No reproduction or networking permitted without license from IHS Not for Resale

### F.1.2 Interleave for 1 024-byte sectors

For 1 024-byte sectors, the notations shall be specified in F.1.1. In addition, four (FF) bytes are shown as (FF). Depending on the number *n*, these elements are:

for $1 \le n \le 1\,024$ : $A_n = D_n$

for $1025 \le n \le 1032$ : $A_n = SWF_m$

for $1033 \le n \le 1036$ : $A_n = (FF)$

for $1037 \le n \le 1040$ : $A_n = C_k$

for $1041 \le n \le 1200$ : $A_n = E_{s,t}$

where:

$m = n - 1\,024$

$k = n - 1\,036$

$s = \left[(n - 1\,041) \bmod 10\right] + 1$

$t = \text{int}\left[\frac{n - 1\,041}{10}\right] + 1$

The notation int[x] denotes the largest integer not greater than x.

The first three parts of $A_n$ are 10-way interleaved by mapping them onto a two-dimensional matrix $B_{ij}$ with 104 rows and 10 columns. Thus

for $1 \le n \le 1\,040$ : $B_{ij} = A_n$

where:

$i = 103 - \text{int}\left[\frac{n - 1}{10}\right]$

$j = (n - 1) \bmod 10$

### F.1.3 Interleave for 512-byte sectors

For 512-byte sectors, the notations shall be as specified in F.1.1. In addition the six (FF) bytes are shown as (FF). Depending on the number *n*, these elements are:

for $1 \le n \le 512$ : $A_n = D_n$

for $513 \le n \le 520$ : $A_n = SWF_m$

for $521 \le n \le 526$ : $A_n = (FF)$

for $527 \le n \le 530$ : $A_n = C_k$

for $531 \le n \le 610$ : $A_n = E_{s,t}$

where:



Copyright International Organization for Standardization
Provided by IHS under license with ISO
No reproduction or networking permitted without license from IHS Not for Resale

$$m = n - 512$$
$$k = n - 526$$
$$s = \left[(n - 531) \bmod 5\right] + 1$$
$$t = \text{int}\left[\frac{n - 531}{5}\right] + 1$$

The first four parts of $A_n$ are 5-way interleaved by mapping them onto a two-dimensional matrix $B_{ij}$ with 106 rows and 5 columns. Thus:

for $1 \le n \le 530$ $B_{ij} = A_n$

where:

$$i = 105 - \text{int}\left[\frac{n - 1}{5}\right]$$
$$j = (n - 1) \bmod 5$$

## F.2 CRC

### F.2.1 General

The CRC and the ECC shall be computed over the Galois field based on the primitive polynomial

$$G_p(x) = x^8 + x^5 + x^3 + x^2 + 1$$

The generator polynomial for the CRC bytes shall be

$$G_C(x) = \prod_{i=136}^{i=139} (x + \alpha^i)$$

where the element $\alpha^i = (ß^i)^{88}$, with ß being a primitive root of $G_p(x)$. The value of the $n$-th bit in a byte is the coefficient of the $n$-th power of ß, where $0 \le n \le 7$, when ß is expressed on a polynomial basis. The contents of the four check bytes $C_k$ of the CRC are defined by the residual polynomial

$$R_C(x) = I_C(x)x^4 \bmod G_C(x)$$
$$R_C(x) = \sum_{k=1}^{k=4} C_k x^{4-k}$$

The last equation specifies the storage locations for the coefficients of the polynomial.

### F.2.2 CRC for 2 048-byte sectors

The four check bytes of the CRC shall be computed over the user data and the SWF bytes as specified in F.2.1.



Copyright International Organization for Standardization
Provided by IHS under license with ISO
No reproduction or networking permitted without license from IHS Not for Resale

The information polynomial shall be

$$I_C(x) = \left[ \sum_{i=1}^{i=102} \left( \sum_{j=0}^{j=19} (B_{i,j}) x^i \right) \right] + \sum_{j=0}^{j=15} (B_{0,j}) x^0$$

### F.2.3 CRC for 1 024-byte sectors

The four check bytes of the CRC shall be computed over the user data, the SWF bytes and the four (FF) bytes as specified in F.2.1..

The information polynomial shall be

$$I_C(x) = \left[ \sum_{i=1}^{i=103} \left( \sum_{j=0}^{j=9} (B_{i,j}) x^i \right) \right] + \sum_{j=0}^{j=5} (B_{0,j}) x^0$$

### F.2.4 CRC for 512-byte sectors

The four check bytes of the CRC shall be computed over the user data, the SWF bytes and the six (FF) bytes as specified in F.2.1. The information polynomial shall be

$$I_C(x) = \left[ \sum_{i=1}^{i=105} \left( \sum_{j=0}^{j=4} (B_{i,j}) x^i \right) \right] + (B_{0,0}) x^0$$

## F.3 ECC

The primitive polynomial $G_p(x)$ and the elements $\alpha^i$ and ß shall be as specified in F.2.1. The generator polynomial for the check bytes of the ECC shall be

$$G_E(x) = \prod_{i=120}^{i=135} (x + \alpha^i)$$

This polynomial is self-reciprocal. This property can be used to reduce the hardware size. The initial setting of the ECC register shall be all ZEROs. The bits of the computed check bytes shall be inverted before they are encoded into Channel bits.

### F.3.1 ECC for 2 048-byte sectors

The 160 check bytes of the ECC shall be computed over the user bytes, the SWF bytes and the CRC bytes. The corresponding 10 information polynomials shall be:

$$I_{E_j}(x) = \sum_{i=0}^{i=102} (B_{i,j}) x^i$$

where $0 \leq j \leq 19$.

The contents of the 16 check bytes $E_{s,t}$ for each polynomial $I_{E_j}(x)$ are defined by the residual polynomial



Copyright International Organization for Standardization
Provided by IHS under license with ISO
No reproduction or networking permitted without license from IHS Not for Resale

$$R_{\mathrm{E}_j}(x) = I_{\mathrm{E}_j}(x)x^{16} \mod G_{\mathrm{E}}(x)$$

$$R_{\mathrm{E}_j}(x) = \sum_{t=1}^{t=16} \mathrm{E}_{j+1,t}\, x^{16-t}$$

The last equation specifies the storage locations for the coefficients of the polynomials.

### F.3.2 ECC for 1 024-byte sectors

The 160 check bytes of the ECC shall be computed over the user bytes, the SWF bytes, the four (FF) bytes and the CRC bytes. The corresponding 10 information polynomials shall be:

$$I_{\mathrm{E}_j}(x) = \sum_{i=0}^{i=103} (\mathrm{B}_{i,j})x^i$$

where $0 \le j \le 9$.

The calculation of the 16 check bytes for each of the information polynomials $I_{\mathrm{E}_j}(x)$ shall be carried out as specified in F.3.1.

### F.3.3 ECC for 512-byte sectors

The 80 check bytes of the ECC shall be computed over the user data bytes, the SWF bytes, the six (FF) bytes and the CRC bytes. The corresponding 5 information polynomials shall be:

$$I_{\mathrm{E}_j}(x) = \sum_{i=0}^{i=105} (\mathrm{B}_{i,j})x^i$$

where $0 \le j \le 4$.

The calculation of the 16 check bytes for each of the information polynomials $I_{\mathrm{E}_j}(x)$ shall be carried out as specified in F.3.1.

## F.4 Resync

The Resync fields (see annex G) shall be inserted in the Data field to prevent loss of synchronization and to limit the propagation of errors in the user data. They are numbered consecutively and shall contain one of the following pattern of Channel bits.

0X0 100 000 001 000 000 100 00Y

0X0 100 000 001 000 000 101 00Y

Where X and Y are set to ZERO or ONE based on the preceding or following data patterns.

For 2 048-byte sectors, a field RSn shall be inserted between bytes $\mathrm{A}_{40n}$ and $\mathrm{A}_{40n+1}$,

where $1 \le n \le 59$.

For 1 024-byte sectors, a field RSn shall be inserted between bytes $\mathrm{A}_{30n}$ and $\mathrm{A}_{30n+1}$,

where $1 \le n \le 39$.

For 512-byte sectors, a field RSn shall be inserted between bytes $\mathrm{A}_{15n}$ and $\mathrm{A}_{15n+1}$,

where $1 \le n \le 40$.



Copyright International Organization for Standardization
Provided by IHS under license with ISO
No reproduction or networking permitted without license from IHS Not for Resale

### F.5 Recording sequence for the Data field

The elements of the Data field shall be recorded on the disk according to sequence $A_n$ immediately following the Sync bytes and with the Resync bytes inserted as specified in F.4.

Figures F.1, F.2 and F.3 show in matrix form the arrangement of these elements. The sequence of recording is from top-to-bottom and left-to-right.

| | |
|---|---|
| SB | designates a Sync byte |
| D | designates a user byte |
| RS | designates a Resync byte |
| P | designates a SWF byte |
| C | designates a check byte for CRC |
| E | designates a check byte for ECC |
| (FF) | designates a (FF) byte |

For 2 048-byte sectors (figure F.1) the first 103 rows contain in columns 0 to 19 the user bytes, the SWF bytes and the CRC check bytes. The next 16 rows contain only the ECC check bytes.

For 1 024-byte sectors (figure F.2) the first 104 rows contain in columns 0 to 9 the user bytes, the SWF bytes, the four (FF) bytes and the CRC check bytes. The next 16 rows contain only the ECC check bytes.

For 512-byte sectors (figure F.3) the first 106 rows contain in columns 0 to 4 the user bytes, the SWF bytes, the six (FF) bytes and the CRC check bytes. The next 16 rows contain only the ECC check bytes.



Copyright International Organization for Standardization
Provided by IHS under license with ISO
No reproduction or networking permitted without license from IHS Not for Resale

Copyright International Organization for Standardization
Provided by IHS under license with ISO
No reproduction or networking permitted without license from IHS
Not for Resale



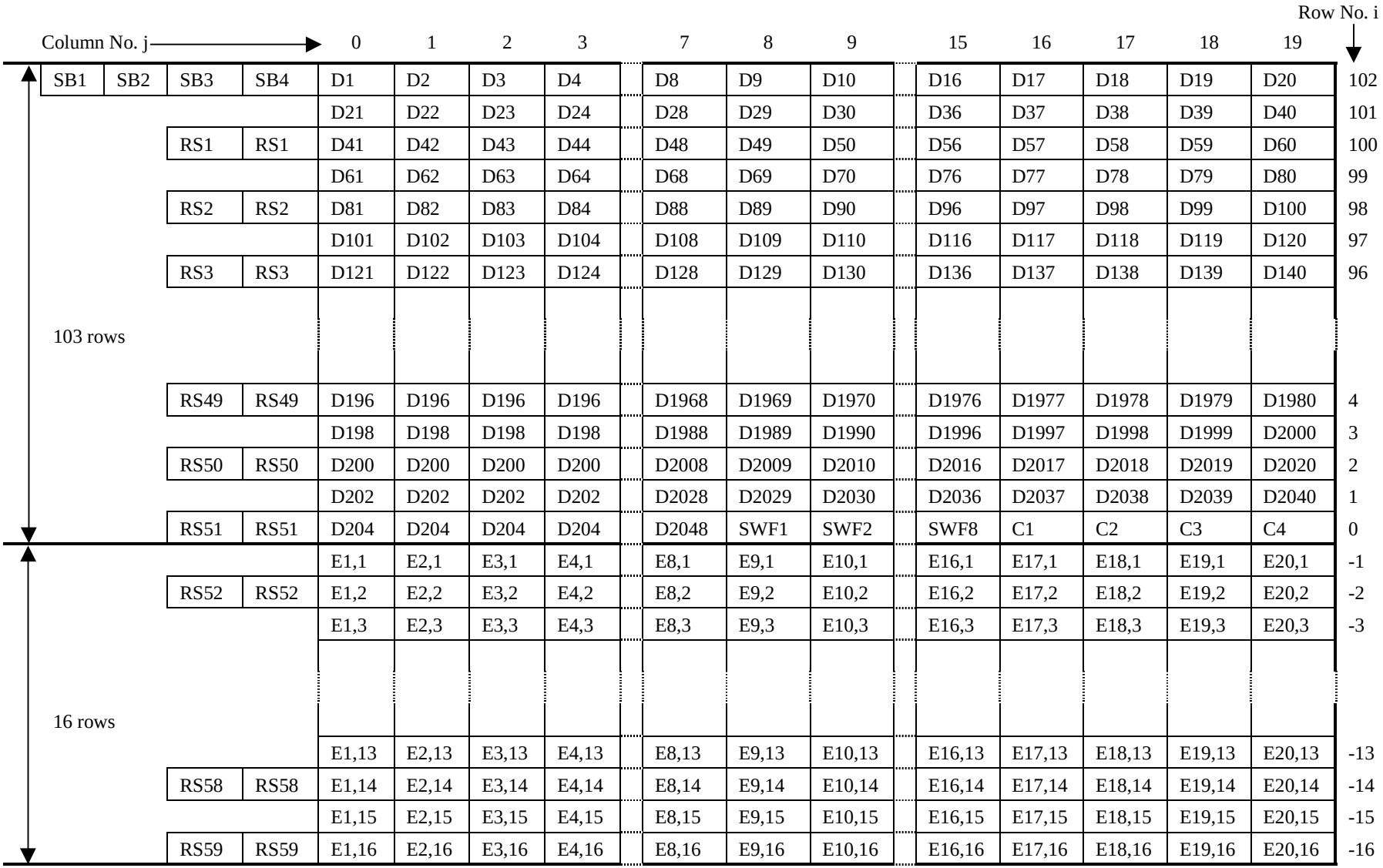


**Figure F.1 – Data configuration, 2 048-byte sectors, ECC with interleave**

| Column No.j ----------> | | | | 0 | 1 | 2 | 3 | 4 | 5 | 6 | 7 | 8 | 9 | Row No.i | |
|---|---|---|---|---|---|---|---|---|---|---|---|---|---|---|---|
| SB1 | SB2 | SB3 | SB4 | D1 | D2 | D3 | D4 | D5 | D6 | D7 | D8 | D9 | D10 | 103 |
| | | | | D11 | D12 | D13 | D14 | D15 | D16 | D17 | D18 | D19 | D20 | 102 |
| | | | | D21 | D22 | D23 | D24 | D25 | D26 | D27 | D28 | D29 | D30 | 101 |
| | | RS1 | RS1 | D31 | D32 | D33 | D34 | D35 | D36 | D37 | D38 | D39 | D40 | 100 |
| | | | | D41 | D42 | D43 | D44 | D45 | D46 | D47 | D48 | D49 | D50 | 99 |
| | | | | D51 | D52 | D53 | D54 | D55 | D56 | D57 | D58 | D59 | D60 | 98 |
| | | RS2 | RS2 | D61 | D62 | D63 | D64 | D65 | D66 | D67 | D68 | D69 | D70 | 97 |
| 104 rows | | | | | | | | | | | | | | |
| | | | | D971 | D972 | D973 | D974 | D975 | D976 | D977 | D978 | D979 | D980 | 6 |
| | | | | D981 | D982 | D983 | D984 | D985 | D986 | D987 | D988 | D989 | D990 | 5 |
| | | RS33 | RS33 | D991 | D992 | D993 | D994 | D995 | D996 | D997 | D998 | D999 | D1000 | 4 |
| | | | | D1001 | D1002 | D1003 | D1004 | D1005 | D1006 | D1007 | D1008 | D1009 | D1010 | 3 |
| | | | | D1011 | D1012 | D1013 | D1014 | D1015 | D1016 | D1017 | D1018 | D1019 | D1020 | 2 |
| | | RS34 | RS34 | D1021 | D1022 | D1023 | D1024 | SWF1 | SWF2 | SWF3 | SWF4 | SWF5 | SWF6 | 1 |
| | | | | SWF7 | SWF8 | (FF) | (FF) | (FF) | (FF) | C1 | C2 | C3 | C4 | 0 |
| | | | | E1,1 | E2,1 | E3,1 | E4,1 | E5,1 | E6,1 | E7,1 | E8,1 | E9,1 | E10,1 | -1 |
| | | RS35 | RS35 | E1,2 | E2,2 | E3,2 | E4,2 | E5,2 | E6,2 | E7,2 | E8,2 | E9,2 | E10,2 | -2 |
| | | | | E1,3 | E2,3 | E3,3 | E4,3 | E5,3 | E6,3 | E7,3 | E8,3 | E9,3 | E10,3 | -3 |
| 16 rows | | | | | | | | | | | | | | |
| | | RS39 | RS39 | E1,14 | E2,14 | E3,14 | E4,14 | E5,14 | E6,14 | E7,14 | E8,14 | E9,14 | E10,14 | -14 |
| | | | | E1,15 | E2,15 | E3,15 | E4,15 | E5,15 | E6,15 | E7,15 | E8,15 | E9,15 | E10,15 | -15 |
| | | | | E1,16 | E2,16 | E3,16 | E4,16 | E5,16 | E6,16 | E7,16 | E8,16 | E9,16 | E10,16 | -16 |

**Figure F.2 - Data field configuration, 1024-byte sectors, ECC with 10-way interleave**



Copyright International Organization for Standardization
Provided by IHS under license with ISO
No reproduction or networking permitted without license from IHS Not for Resale

| Column No. j ------> | | | 0 | 1 | 2 | 3 | 4 | | Row No. i |
|---|---|---|---|---|---|---|---|---|---|
| SB1 | SB2 | SB3 | SB4 | D1 | D2 | D3 | D4 | D5 | 105 |
| | | | | D6 | D7 | D8 | D9 | D10 | 104 |
| | | | | D11 | D12 | D13 | D14 | D15 | 103 |
| | | RS1 | RS1 | D16 | D17 | D18 | D19 | D20 | 102 |
| | | | | D21 | D22 | D23 | D24 | D25 | 101 |
| | | | | D26 | D27 | D25 | D29 | D30 | 100 |
| | | RS2 | RS2 | D31 | D32 | D33 | D35 | D35 | 99 |
| 106 rows | | | | | | | | | |
| | | | | D506 | D507 | D508 | D509 | D510 | 4 |
| | | | | D511 | D512 | SWF1 | SWF2 | SWF3 | 3 |
| | | | | SWF4 | SWF5 | SWF6 | SWF7 | SWF8 | 2 |
| | | | | (FF) | (FF) | (FF) | (FF) | (FF) | 1 |
| | | RS35 | RS35 | (FF) | C1 | C2 | C3 | C4 | 0 |
| | | | | E1,1 | E2,1 | E3,1 | E4,1 | E5,1 | -1 |
| | | | | E1,2 | E2,2 | E3,2 | E4,2 | E5,2 | -2 |
| | | RS36 | RS36 | E1,3 | E2,3 | E3,3 | E4,3 | E5,3 | -3 |
| 16 rows | | | | | | | | | |
| | | | | E1,13 | E2,13 | E3,13 | E4,13 | E5,13 | -13 |
| | | | | E1,14 | E2,14 | E3,14 | E4,14 | E5,14 | -14 |
| | | RS40 | RS40 | E1,15 | E2,15 | E3,15 | E4,15 | E5,15 | -15 |
| | | | | E1,16 | E2,16 | E3,16 | E4,16 | E5,16 | -16 |

**Figure F.3 - Data field configuration, 512-byte sectors, ECC with 5-way interleave**



--`,,```,,,,````-`-`,,`,,`,`,,`---
Copyright International Organization for Standardization
Provided by IHS under license with ISO
No reproduction or networking permitted without license from IHS
Not for Resale

# Annex G
(normative)

## Determination of Resync pattern

DSV (Digital Sum Value) is used in the descriptions that follow. Other acronyms include PLL (Phase Lock Loop), PPM (Pulse Position Modulation) and PWM (Pulse Width Modulation).

### G.1 Conditions of Resync pattern

The Resync pattern shall have the following characteristics to satisfy its required function:

1. The Resync pattern is an irregular Channel bit pattern of seven consecutive ZERO bits and a ONE bit followed by six consecutive ZERO bits that does not occur in the (1,7) modulation code.

2. The irregularity of Resync pattern is detectable using either only leading edges or only trailing edges when dual PLL is used.

3. The number of ONEs in Resync pattern is switchable from an odd number to an even number or vice versa for minimizing the d.c. level fluctuation of the data pattern in the Data field of a sector.

4. The length of the Resync pattern shall be 24 Channel bits.

### G.2 Resync pattern

Selection of one of the two Resync patterns shown below shall be made in order to minimize the d.c. level fluctuation.
The selection criteria are described in G.5.

| | Data 1 | Resync area | Data 2 |
|---|---|---|---|
| | | Resync pattern | |
| Resync 1 | 0x0 | 100000001000000100 | 00y |
| Resync 2 | 0x0 | 100000001000000101 | 00y |

where x = ZERO or ONE
y = ZERO or ONE



Copyright International Organization for Standardization
Provided by IHS under license with ISO
No reproduction or networking permitted without license from IHS Not for Resale

## G.3 Generation algorithm of resync pattern

| PREVIOUS Data 1 | | Resync Area | | | | | | | | NEXT Data 2 |
|---|---|---|---|---|---|---|---|---|---|---|
| Data bits X1 X2 | Channel bits | 00 0x0 | assumed data bits / Resync Pattern | | | | | z | 01 00y | Data bits X3 X4 |
| 00 | 0 001 | 010 | 100 | 000 | 001 | 000 | 000 | 100 | 001 | 0x |
| | | | | | | | | 0 | 000 | 1x |
| | | | | | | | | 1 | 001 | 0x |
| | | | | | | | | 1 | 000 | 1x |
| 00 | 1 001 | 010 | 100 | 000 | 001 | 000 | 000 | 100 | 001 | 0x |
| | | | | | | | | 0 | 000 | 1x |
| | | | | | | | | 1 | 001 | 0x |
| | | | | | | | | 1 | 000 | 1x |
| 01 | 0 001 | 010 | 100 | 000 | 001 | 000 | 000 | 100 | 001 | 0x |
| | | | | | | | | 0 | 000 | 1x |
| | | | | | | | | 1 | 001 | 0x |
| | | | | | | | | 1 | 000 | 1x |
| 01 | 1 010 | 000 | 100 | 000 | 001 | 000 | 000 | 100 | 001 | 0x |
| | | | | | | | | 0 | 000 | 1x |
| | | | | | | | | 1 | 001 | 0x |
| | | | | | | | | 1 | 000 | 1x |
| 10 | 0 101 | 010 | 100 | 000 | 001 | 000 | 000 | 100 | 001 | 0x |
| | | | | | | | | 0 | 000 | 1x |
| | | | | | | | | 1 | 001 | 0x |
| | | | | | | | | 1 | 000 | 1x |
| 10 | 1 - - - | | does not occur | | | | | | | |
| 11 | 0 010 | 000 | 100 | 000 | 001 | 000 | 000 | 100 | 001 | 0x |
| | | | | | | | | 0 | 000 | 1x |
| | | | | | | | | 1 | 001 | 0x |
| | | | | | | | | 1 | 000 | 1x |
| 11 | 1 - - - | | does not occur | | | | | | | |

where z = ZERO for Resync 1
z = ONE for Resync 2

Note 1: $x_1$ and $x_2$ are encoded assuming the following information bits are ZERO ZERO
Note 2: The values of these information bits are the assumed value for encoding.
Note 3: This Channel bit was inverted after encoding in order to generate the irregular pattern
Note 4: The value of the last three bits of the Resync area is determined by:
1) the previous Channel bit assumed to be ZERO
2) the two information bits (assumed to be ZERO ONE);
3) the state of Data 2 information bit $X_3$ per the (1,7) encode table 3.



Copyright International Organization for Standardization
Provided by IHS under license with ISO
No reproduction or networking permitted without license from IHS Not for Resale

## G.4 Minimization of d.c. level

The criteria for selecting either Resync pattern 1 or Resync pattern 2 in order to minimize the d.c. level fluctuation is based on the Channel bits of the Data area, and 0x0, 00y in the Resync area.

| Data | Resync area | Data |
|---|---|---|
| | Resync pattern | |
| | 100000001000000100 | |
| Data Block 0x0 | (Resync pattern 1) | 00y Data Block |
| | 100000001000000101 | |
| | (Resync Pattern 2) | |

where x = ZERO or ONE
y = ZERO or ONE

The decision is made to select either Resync pattern 1 or Resync pattern 2 according to the procedure described in G.5.

## G.5 Determination of Resync pattern

The Resync pattern to be used shall be determined by the following procedure.

1. Convert the Channel bits described in PPM data into PWM data in order to simplify handling.

For example, if the PPM data is
... 0010100010010 ...
the PWM data shall be
... 0011000011100 ...

The DSV calculation shall be defined in terms of PWM data such that ZERO = -1 and ONE = +1. (see Example below)

**Example of calculation of Block $DSV_m$ and Resync $DSV_m$**

(1,7) channel bit (PPM data) 0 1 0 0 0 0 1 0 0 0 1 0 0 0 0 0 0 0 1 0 0 0 0

PWM data 0 1 1 1 1 1 0 0 0 0 1 1 1 1 1 1 1 1 0 0 0 0 0

Written marks on the disk

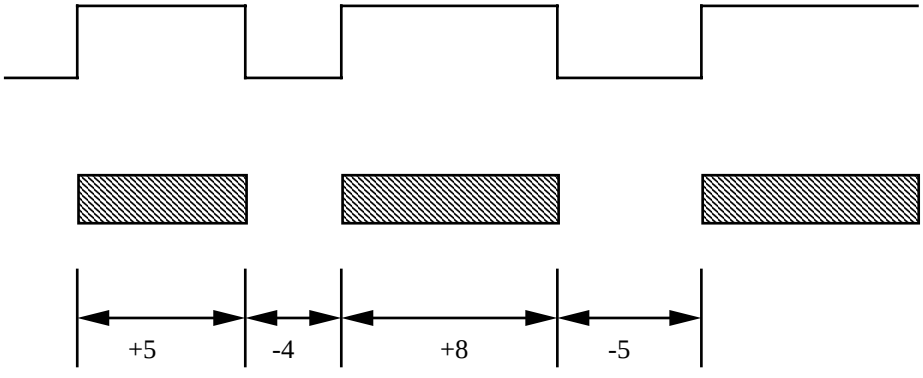


$DSV_m$ is calculated as
$DSV_m = (+5 - 4 + 8 - 5 \ldots)$

2. The Resync area shall be divided into two parts (RS || INV), where both parts are concatenated as follows:



--`,,```,,,,````-`-`,,`,,`,`,,`---

Copyright International Organization for Standardization
Provided by IHS under license with ISO
No reproduction or networking permitted without license from IHS Not for Resale

RS = 0x010000000100000010 in PPM data
INV = 000y(INV1) or 100y(INV2) in PPM data .

3. The user data field shall be concatenated as

$VFO_3$ || SYNC || $B_0$ || $RS_1$ || INV1 (or INV2) || $B_1$ || $RS_2$ || ...
... || INV1 (or INV2) || $B_m$ || $RS_{m+1}$ || ... ... || INV1 (or INV2) || $B_N$

where
m = 1 to N
N = 59 in the 2 048-byte sector,
39 in the 1 024-byte sector, and
40 in the 512-byte sector.
(See figure G.1)

4. The DSV(z) function shall be defined such that the argument (z), which is a PPM data stream, shall result in the PWM DSV sum based on the last PWM state of the PWM data preceding the data in the (z) argument.

5. INV1 or INV2 shall be selected in step m using the following algorithm:

$P_0 = DSV(VFO_3 || SYNC || B_0 || RS_1)$
$P_m = P_{m-1} + DSV(INV1 || B_m || RS_{m+1})$ or
$P_m = P_{m-1} + DSV(INV2 || B_m || RS)$

Select INV1 or INV2 to minimize $|P_m|$.

$P_N = P_{N-1} + DSV(INV1 || B_N)$ or
$P_N = P_{N-1} + DSV(INV2 || B_N)$

Select INV1 or INV2 to minimize $|P_N|$.

This procedure shall be repeated from m = 1 to N, where N = 59 in 2 048-byte sector, N = 39 in 1 024-byte sector and N = 40 in 512-byte sector. If $|P_m|$ is the same for Resync pattern 1 and Resync pattern 2, Resync pattern 1 shall be selected.



Copyright International Organization for Standardization
Provided by IHS under license with ISO
No reproduction or networking permitted without license from IHS Not for Resale

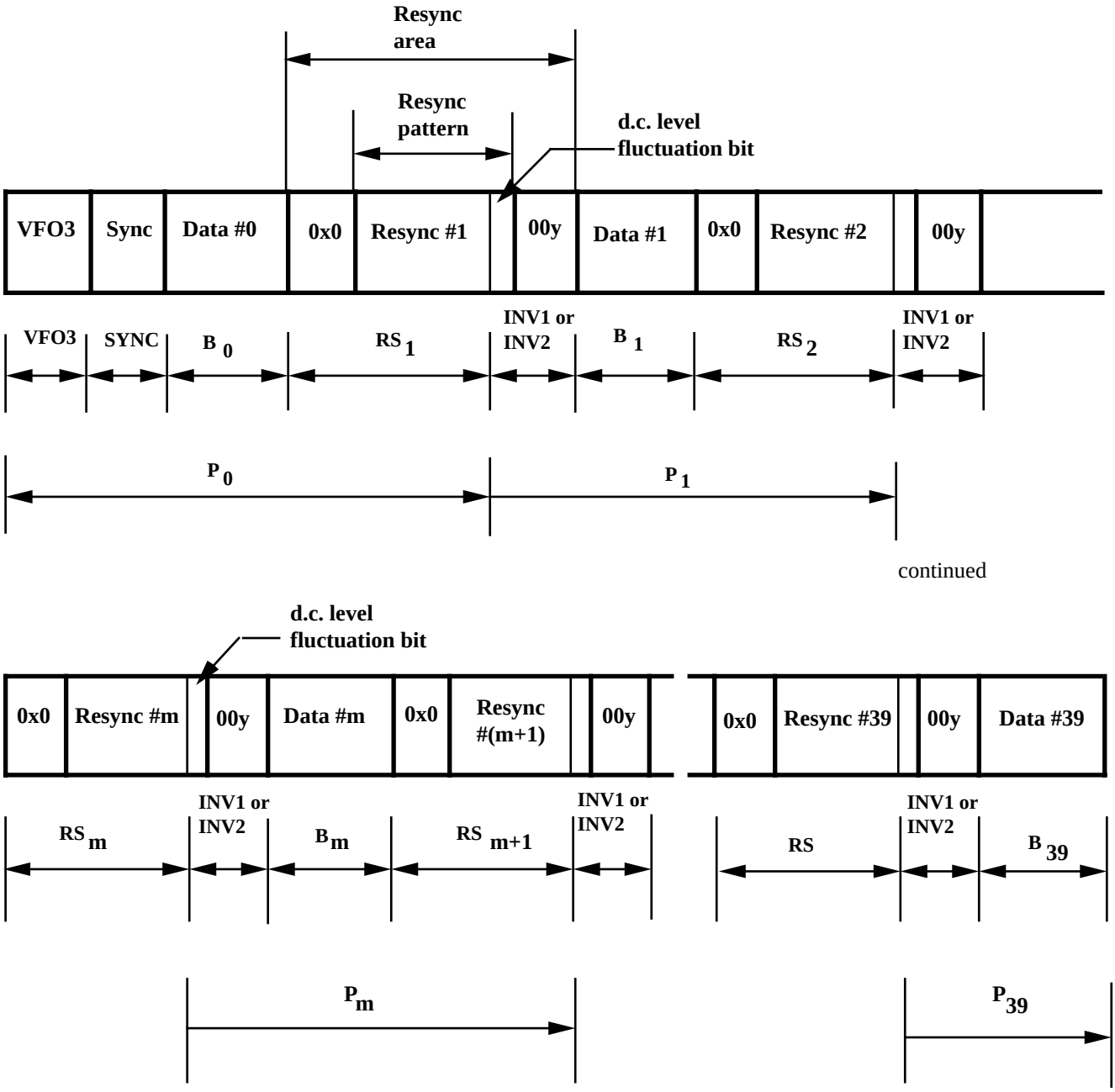


continued




Note: The above figure is for 1024-byte sector.
Note: Each P0, P1,...P39 represents the total DSV from VFO3.

**Figure G.1 — Example of Resync byte**



Copyright International Organization for Standardization
Provided by IHS under license with ISO
No reproduction or networking permitted without license from IHS Not for Resale

# Annex H
(normative)

## Read Channel for measuring jitter

Jitter shall be measured by using the following read Channel.

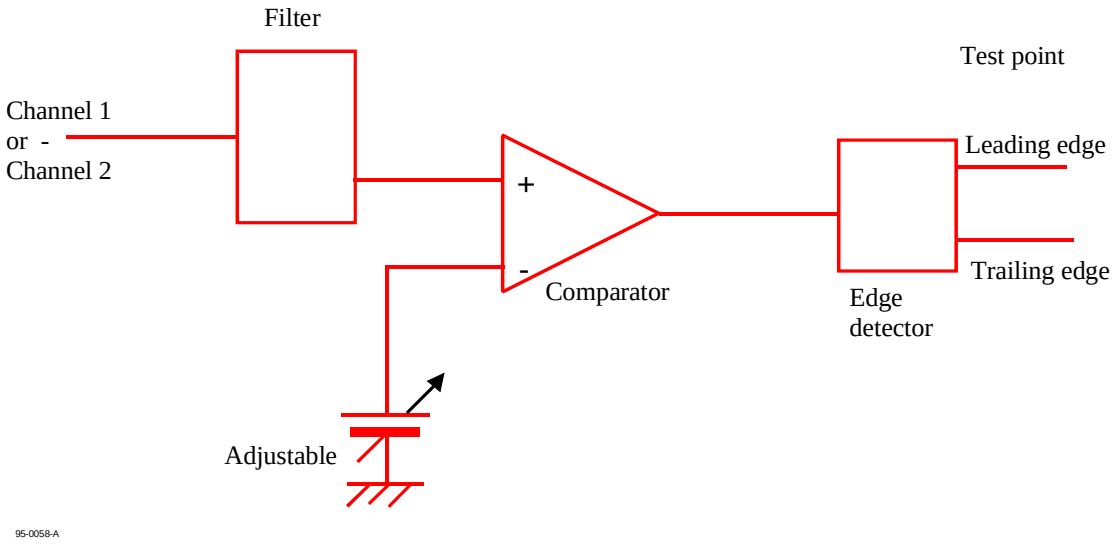


Input signal:

Channel 1, for embossed marks

Channel 2, for user written marks

Filter specifications:

1) Equalizer: See annex M.
2) Filter type: 5th Bessel function
3) Low pass filter: Cut-off frequency = one half the channel clock frequency of the band being tested



Copyright International Organization for Standardization
Provided by IHS under license with ISO
No reproduction or networking permitted without license from IHS
Not for Resale

# Annex J
(normative)

## Timing jitter measuring procedure

The timing jitter of leading-to-leading or trailing-to-trailing edges shall be measured using the following procedures.

1). Set the threshold level of the detector circuit such that the 2T mark and 2T space of the VFO is exactly 2 Channel bit times T long.

2). Hold the threshold level, and detect the signal edges.

3). Measure the lengths in time of the leading-to-leading and trailing-to-trailing edges using a Time Interval Analyzer.

4). Acquire $10^5$ independent time interval samples excluding the data from defective areas.

5). Calculate the standard deviation *Jt* of the timing jitter distribution; the difference between the measured length of leading-to-leading or trailing-to-trailing edges and the mean value of corresponding mark or space length $L_n$ shall be taken as samples.

where *Jt* is shown in figure J.1.

The lengths leading-to-leading or trailing-to-trailing edges shall be separately examined, and the specifications should be satisfied even in the worst case.

In case of header signal evaluation, the threshold level shall be set using $VFO_1$ and the time interval samples shall be measured using the AM to PA fields.

In case of embossed data signal evaluation, the threshold level shall be set using $VFO_3$ and the time interval samples shall be measured using the Sync and Data field in the user data area, including all time interval samples from user data SWF, CRC, ECC, and Resync.



--`,,```,,,,````-`-`,,`,,`,`,,`---

Copyright International Organization for Standardization
Provided by IHS under license with ISO
No reproduction or networking permitted without license from IHS Not for Resale

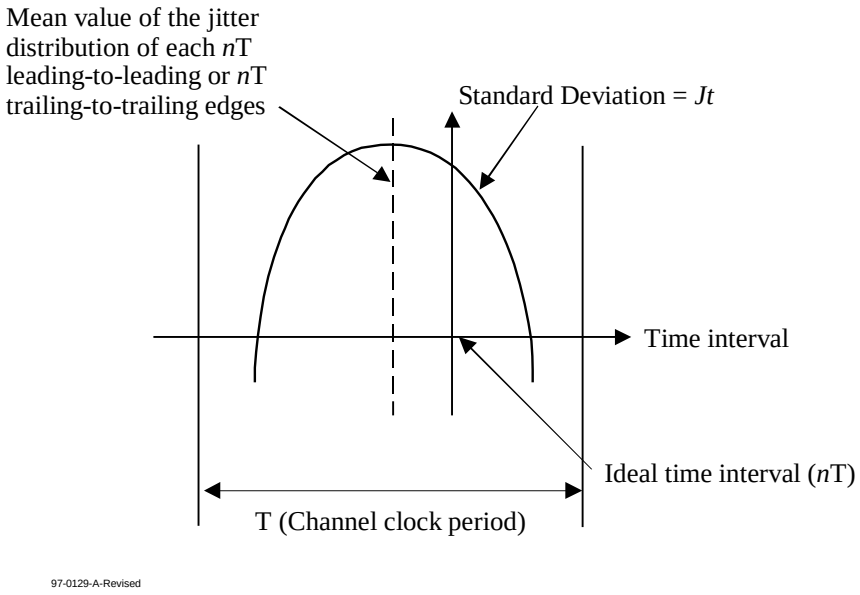


**Figure J.1 - Measured distribution of timing jitter**



Copyright International Organization for Standardization
Provided by IHS under license with ISO
No reproduction or networking permitted without license from IHS
Not for Resale

# Annex K
(normative)

## Definition of write pulse shape

The rise and fall times, $T_r$ and $T_f$, shall each be as specified in 25.3.1 for any write pulse width $T_p$. The definition of the write pulse shape for Types R/W, P-ROM and WO is shown in the following figure:

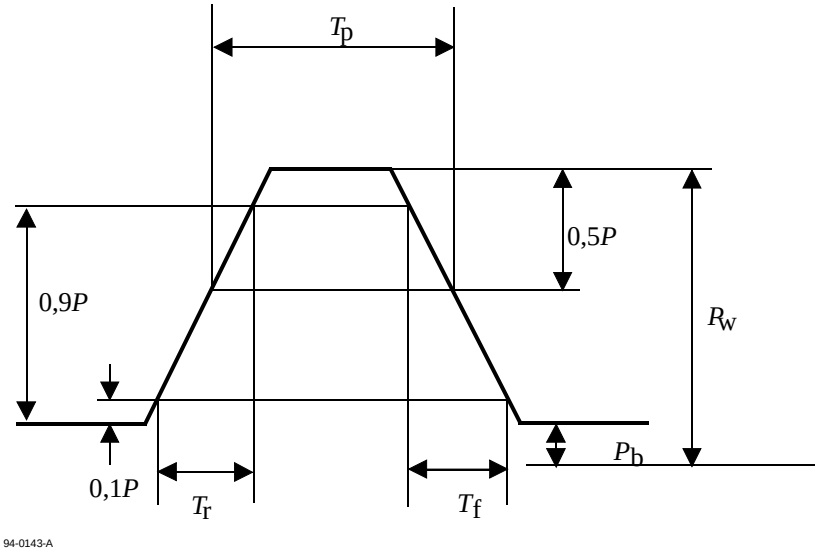


where: $P_w$ = Write Power $T_r$ = Rise Time

$P_b$ = Bias power $P = P_w - P_b$

$T_f$ = Fall Time $T_p$ = Write pulse width

**Figure K.1 - Shape of write pulse for testing Types R/W, P-ROM, and WO**



--`,,```,,,,````-`-`,,`,,`,`,,`---

Copyright International Organization for Standardization
Provided by IHS under license with ISO
No reproduction or networking permitted without license from IHS Not for Resale

The definition of the write pulse shapes for Types DOW. P-DOW and WO-DOW is shown in the following figure:

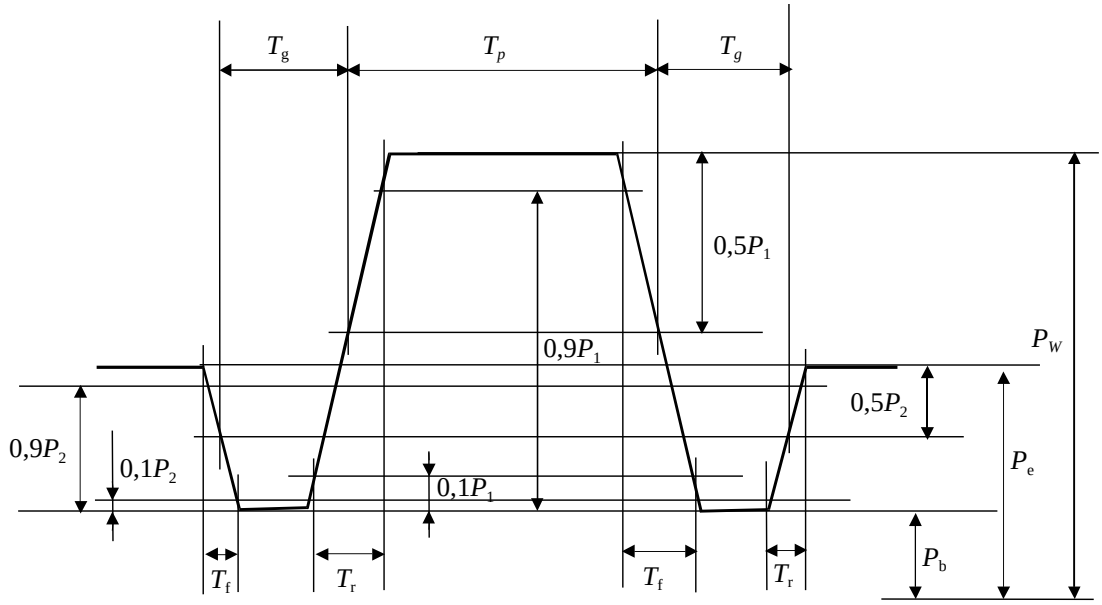


| | | | |
|---|---|---|---|
| $P_W$ | : Write power | $P_b$ | : Bias power |
| $P_e$ | : Erase power | $T_f$ | : Fall time |
| $T_r$ | : Rise time | $P_1$ | : $P_w$ - $P_b$ |
| $T_p$ | : Write pulse width | $P_2$ | : $P_e$ - $P_b$ |
| $T_g$ | : Cooling gap width - 0,5T | | |

**Figure K.2 - Shape of write pulse for testing Types DOW, WO-DOW and P-DOW**



Copyright International Organization for Standardization
Provided by IHS under license with ISO
No reproduction or networking permitted without license from IHS
Not for Resale

# Annex L
(normative)

## Measurement of figure of merit

**L.1** The figure of merit is, in practice, equal to the amplitude of the read signal from a recording at low frequency (in two dimensions). The written domains shall be substantially larger than the focal spot, so as to work in the low frequency region where the modulation transfer function of the optical system is one.

This implies that for a preformatted disk, rotating at 50 Hz, a signal with a frequency between 10 kHz and 100 kHz has to be written on several consecutive tracks and in between those tracks maintaining a fixed phase relationship between successive write passes. The disk shall be read with the read power specified in byte 21 of the SFP Zone (see 17.4.2).

Determination of the figure of merit using an optical system as shown in figure 1 and with characteristics as specified in 9,1 will not measure media properties only but also the optical retardation of the optical system. Therefore a calibration of the optical system is needed with a conventional determination of the figure of merit by measuring the reflectance, Kerr rotation and ellipticity. This calibration can only be executed reliably on media with low coercivity.

**L.2** The optical test head shall be calibrated as follows. A test disk with negligible birefringence (glass) and low coercivity magneto-optical layer is used for conventional determination of reflectance $R$, Kerr rotation θ and ellipticity ß. The product $F_L = R \cdot \sin\theta \cdot \cos 2ß$ is determined. On the same disk a test pattern as described above is written and read back with the optical head resulting in signal amplitude $V_L$. Any other disk (high or low coercivity) can now be measured with the optical head using a similar test pattern, resulting in a signal amplitude $V$. The figure of merit $F_m$ of this disk is

$$F_m = F_L \cdot V / V_L$$



Copyright International Organization for Standardization
Provided by IHS under license with ISO
No reproduction or networking permitted without license from IHS Not for Resale

# Annex M
(normative)

## Implementation Independent Mark Quality Determination (IIMQD) for the interchange of recorded media

### M.1 Test patterns

The IIMQD offset test uses two special patterns consisting of seven marks and seven spaces each, one mark and one space of each run length from 2T to 8T, to test the drive's ability to form marks of the proper length for the purposes of media interchange.

The following procedure shall be used to determine IIMQD for the interchange of recorded media.

Erase the tracks and write one of the following test patterns as a group many times on several tracks at the 30 mm, 45 mm, and 60 mm radii using the laser power write method of the drive under test. A separate test shall be done for each pattern.

Pattern No. 1:

| 2T | 2T | 3T | 3T | 4T | 4T | 5T | 5T | 6T | 6T | 7T | 7T | 8T | 8T |
|---|---|---|---|---|---|---|---|---|---|---|---|---|---|
| M | S | M | S | M | S | M | S | M | S | M | S | M | S |

Pattern No. 2:

| 2T | 2T | 3T | 3T | 4T | 4T | 5T | 5T | 6T | 6T | 7T | 7T | 8T | 8T |
|---|---|---|---|---|---|---|---|---|---|---|---|---|---|
| S | M | S | M | S | M | S | M | S | M | S | M | S | M |

where M and S stand for mark and space respectively.

### M.2 Detection method

Read and detect the data signal with the following equalization coupled with the detection method given in 25.2.3. The threshold value TV may be varied in this test to compensate for the edge motion of the marks due to parameter variations.

$$Eq(\omega) = 1 - 2A\cos(\omega 2T)$$

where:

$A$ =0,13

$\omega = 2\pi f$

T is the Channel clock period for the zone being read.

This equalizer can be implemented with a five tap, tapped delay line filter having tap weights of: -A, 0, 1, 0, -A and 0, -A ,1, -A, 0 and clock periods specified in 14.1 for 30 mm and 60 mm radii respectively with a tap delay of 23,0 ns and a disk rotational speed of 50 Hz.

Measure the detected signal from the written tracks in two ways using a time interval analyzer:

1) the mean leading-to-trailing edge (mark) lengths

and

2) the mean trailing-to-leading edge (space) lengths.



Copyright International Organization for Standardization
Provided by IHS under license with ISO
No reproduction or networking permitted without license from IHS Not for Resale

### M.3 Measurement process

The measurements shall be made using $10^5$ independent time interval samples on several tracks at each radial location. The offset for any desired run of length n is the absolute value of the difference of the detected signal length $L_n$ minus $n$ times T. Adjust the threshold level once for both measurements for each pattern to minimize the worst case mark and space offset for this radial position and express it as a percentage of the Channel bit time T.

### M.4 Threshold follower

This tracking threshold follower (or equivalent) shall be used during certain signal measurements as defined in the specific test procedures. A tracking threshold follower is required to establish and maintain the signal base line level for the data detection process. Its purpose is to compensate for local media variances in reflectivity, recording sensitivity, and for changes in signal d.c. content caused by some recorded data patterns observed during the measurement process.



Copyright International Organization for Standardization
Provided by IHS under license with ISO
No reproduction or networking permitted without license from IHS Not for Resale

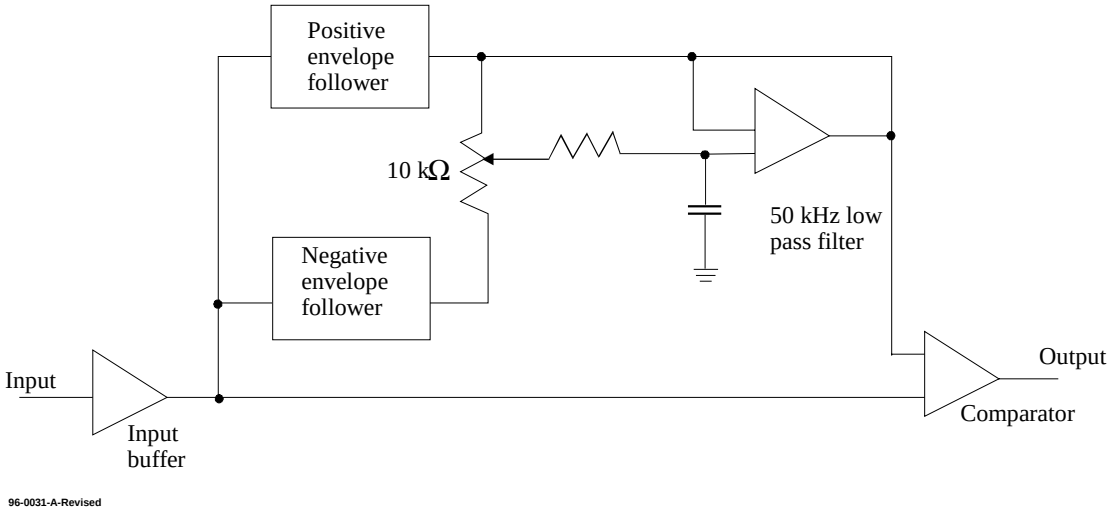


**Figure M.1a - Tracking threshold block diagram**

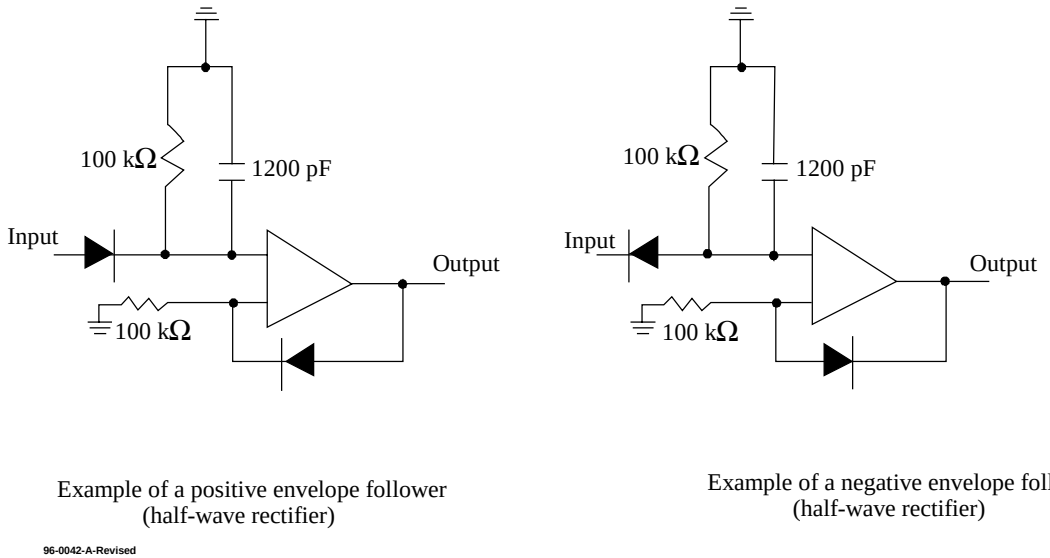


**Figure M.1b - Envelope followers using matched diodes**

**Figure M.1 - Threshold Follower**



Copyright International Organization for Standardization
Provided by IHS under license with ISO
No reproduction or networking permitted without license from IHS
Not for Resale

# Annex N
(normative)

## Requirements for interchange

### N.1 Equipment for writing

The disk under test shall have been written with arbitrary data by a disk drive for data interchange use in the operating environment.

### N.2 Test equipment for reading

#### N.2.1 General

The read test shall be performed on a test drive in the test environment. The rotational frequency of the disk when reading shall be as defined in clause 9.5.

The direction of rotation shall be as defined in clause 10.5.9

#### N.2.2 Read Channel

##### N.2.2.1 Characteristics of the optical beam

The optical beam used for reading shall comply with the requirements of 9.2 b), c), d) and f).

##### N.2.2.2 Read power

The read power shall comply with the requirements of 9.3.

##### N.2.2.3 Optics

The optical head used for reading shall comply with the requirements of annex N.

##### N.2.2.4 Read amplifier

The read amplifier after the photo detector in both Channels 1 and 2 shall have a flat response from d.c. to 37 MHz within 1 dB.

##### N.2.2.5 Analog to binary conversion

The signals from the read amplifier shall be converted from analog to binary. The converter for Channel 1 shall work properly for signals from pre-recorded marks with properties as defined in 22 and 23.

The converter for Channel 2 shall work properly for signals from user-written marks with properties as defined in 26 and 27.

##### N.2.2.6 Binary-to-digital conversion

The binary signal shall be converted to a digital signal according to the rules of the recording code.

#### N.2.3 Tracking

The open-loop transfer function for the axial and radial tracking servo shall be

$$H = \frac{(2\pi f_0)^2}{cs^2}\left(\frac{1+\frac{sc}{2\pi f_0}}{1+\frac{s}{2\pi f_0 c}}\right)$$

where $s = i2\pi f$, within an accuracy such that $|1+H|$ not deviate more than ± 20% from its nominal value in a bandwidth from 50 Hz to 10 kHz.



Copyright International Organization for Standardization
Provided by IHS under license with ISO
No reproduction or networking permitted without license from IHS Not for Resale

The constant $c$ shall be 3. The open-loop 0-dB frequency $f_0$ shall be 1 550 Hz for the axial servo and 2 340 Hz for the radial servo. The open-loop d.c. gain of the axial servo shall be at least 80 dB.

### N.3 Requirements for the digital read signals

A byte error is defined by a byte in which one or more bits have a wrong setting, as detected by the error detection and correction circuit.

**N.3.1** Any sector accepted as valid during the writing process shall not contain byte errors in Channel 2 after the error correction circuit.

**N.3.2** Any sector not accepted as valid during the writing process shall have been rewritten according to the rules for defect management.

### N.4 Requirements for the digital servo signals

The focus of the optical beam shall not jump tracks voluntarily.

### N.5 Requirement for interchange

An interchanged optical disk cartridge meets the requirements for interchangeability if it meets the requirements of N.3 and N.4 when it is written on an interchange drive according to N.1 and read on a test drive according to N.2.



Copyright International Organization for Standardization
Provided by IHS under license with ISO
No reproduction or networking permitted without license from IHS Not for Resale

# Annex P

(normative)

## Measurement implementation for Cross-track signal

The Cross-track signal shall be measured by using the implementation shown in figure P.1 with the following characteristics.

Droop Rate:

$$0{,}1(1/\mu s) \le \frac{\Delta I / I_{bottom}}{\Delta t} \le 0{,}2(1/\mu s)$$

Bottom Trace Error (BTE):

$$\left| \frac{I_{bottom} - I_{bh}}{I_{bottom}} \right| \le 0{,}05$$

$I_{bh}$: Bottom-hold signal at the bottom position

$I_{bottom}$: Channel 1 signal at the bottom position

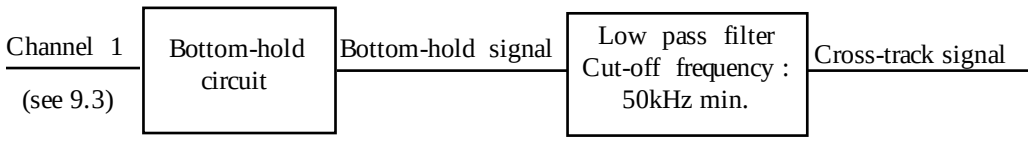


**Figure P.1 Measurement implementation for Cross-track signal**

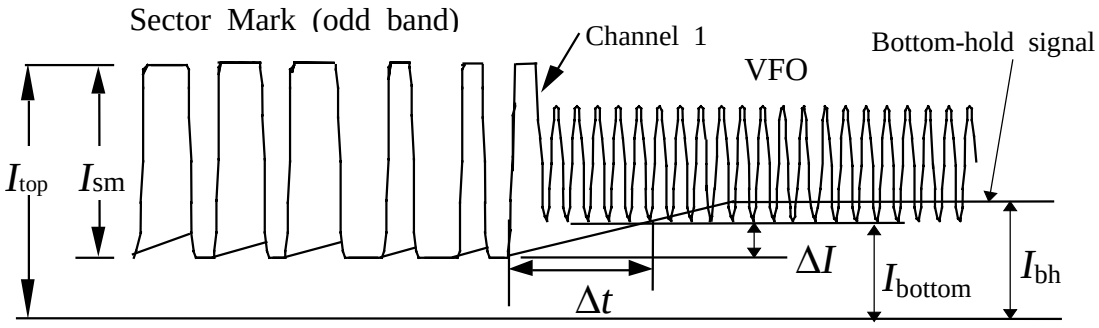


**Figure P.2 Illustration of the various parameters for bottom-hold characteristics.**



Copyright International Organization for Standardization
Provided by IHS under license with ISO
No reproduction or networking permitted without license from IHS
Not for Resale

## Annex Q

(normative)

### Asymmetry measuring definition

The asymmetry of signals from headers (clause 22.4), embossed Recording field (clause 23.2) and user-written data (clause 30.2.3) shall be measured based on the following definitions.

**Q.1 Asymmetry of signal from header (clause 22.4)**

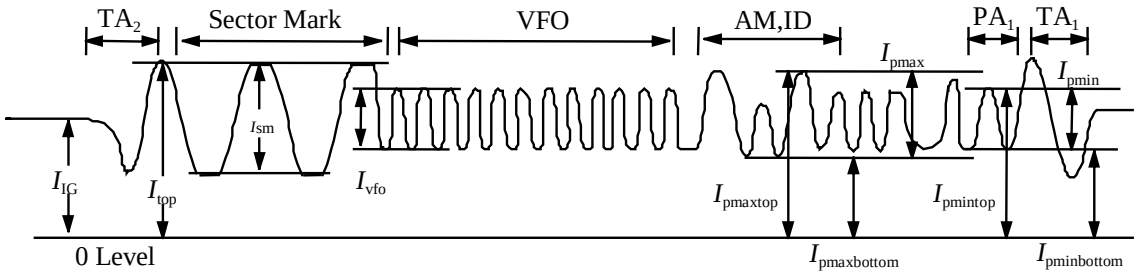


**Figure Q.1 Signal from Header in channel 1**

$$\text{Asymmetry} = \frac{(I_{pmaxtop} + I_{pmaxbottom})/2 - (I_{pmintop} + I_{pminbottom})/2}{(I_{pmaxtop} - I_{pmaxbottom})}$$

where $I_{pmin}$ and $I_{pmax}$ are the signals with minimum and maximum amplitude in that sector from Address Mark, ID, and PA. $I_{pmaxtop}$ and $I_{pmaxbottom}$ are the signals of top and bottom level of $I_{pmax}$. $I_{pmintop}$ and $I_{pminbottom}$ are the signals of top and bottom level of $I_{pmin}$.

**Q.2 Asymmetry of signal from embossed Recording field (clause 23.2)**

$$\text{Asymmetry} = \frac{(I_{pmaxtop} + I_{pmaxbottom})/2 - (I_{pmintop} + I_{pminbottom})/2}{(I_{pmaxtop} - I_{pmaxbottom})}$$

where $I_{pmin}$ and $I_{pmax}$ are the signals with minimum and maximum amplitude in embossed Recording field of sector. $I_{pmaxtop}$ and $I_{pmaxbottom}$ are the signals of top and bottom level of $I_{pmax}$. $I_{pmintop}$ and $I_{pminbottom}$ are the signals of top and bottom level of $I_{pmin}$.

**Q.3 Asymmetry of signal from user-written data (clause 30.2.3)**

$$\text{Asymmetry} = \frac{(I_{Ltop} + I_{Lbottom})/2 - (I_{Htop} + I_{Hbottom})/2}{(I_{Ltop} - I_{Lbottom})}$$

where the notations are as follows:

$I_L$ is a peak-to-peak value of the Channel 2 signal (see clause 9.2) for 8T marks and 8T spaces, written under any of the conditions given in clause 25.3, and read under the conditions specified in clause 20.2.2 c). An 8T is the longest interval allowed by the RLL(1,7) code for each zone.



Copyright International Organization for Standardization
Provided by IHS under license with ISO
No reproduction or networking permitted without license from IHS Not for Resale

$I_H$ is a peak-to-peak value of the Channel 2 signal for 2T marks and 2T spaces, written under the conditions given in clause 25.3, and read under the condition specified in clause 20.2.2 c). A 2T is the lowest interval allowed by the RLL(1,7) code for each zone.

$I_{Ltop}$ and $I_{Lbottom}$ are the signals of top and bottom level of $I_L$. $I_{Htop}$ and $I_{Hbottom}$ are the signals of top and bottom level of $I_H$.

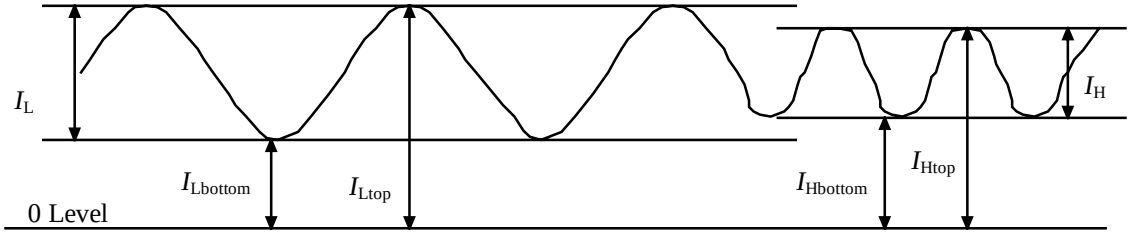


**Figure Q.2 - Definition of $I_L$ and $I_H$**



Copyright International Organization for Standardization
Provided by IHS under license with ISO
No reproduction or networking permitted without license from IHS
Not for Resale

# Annex R
(informative)

## Office environment

### R.1 Air cleanliness

Due to their construction and mode of operation optical disk cartridges have considerable resistance to the effects of dust particles around and inside the disk drive. Consequently it is not generally necessary to take special precautions to maintain a sufficiently low concentration of dust particles.

Operation in heavy concentrations of dust should be avoided e.g. in a machine shop or on a building site.

Office environment implies an environment in which personnel may spend a full working day without protection and without suffering temporary or permanent discomfort.

### R.2 Effects of operation

In the office environment (as well as other environments) it is possible for an optical disk drive to degrade the quality of written marks if the read power is applied to a single track for a long period of time. This would happen if a media in a drive remains loaded, the drive remains in the ready status, and is in jump-back mode on one particular track. If this occurs at the maximum operating temperature (55 $^{\circ}$C) and at the maximum allowable bias field (32 000 A/m), the marks on the media may be degraded. The media manufacturer's selection of the value for the maximum read powers allowed in the User Zone as well as the optical drive manufacturer's read power management method should reflect this possibility and be designed to minimize any risk to data integrity.



Copyright International Organization for Standardization
Provided by IHS under license with ISO
No reproduction or networking permitted without license from IHS Not for Resale

# Annex S
(informative)

## Derivation of the operating climatic environment

This annex gives some background on how some of the conditions of the operating environment in 8.1.2 have been derived.

### S.1 Standard climatic environment classes

The conditions of the ODC operating environment are, with a few exceptions mentioned below, based on parameter values of the IEC standard climatic environment class 3K3 described in IEC publication 721-3-3. This publication defines environmental classes for stationary use of equipment at weather-protected locations.

The IEC class 3K3 refers to climatic conditions which

"... may be found in normal living or working areas, e.g. living rooms , rooms for general use (theatres restaurants etc.), offices, shops, workshops for electronic assemblies and other electrotechnical products, telecommunication centres, storage rooms for valuable and sensitive products."

### S.2 Overtemperature considerations

While IEC class 3K3 defines the limits for the room climate only, the ODC operating environment specification in this International Standard takes into consideration also system and drive overtemperature. This means that when inserted in a drive, the ODC will sense a temperature which is above the ambient room temperature. The figures in the operating environment specification have been calculated from the assumption that overtemperature may be up to 20°C.

### S.3 Absolute humidity

The introduction of the parameter

absolute humidity ( unit : g water / $m^3$ of air )

is very useful when studying overtemperature. When the temperature rises inside a drive, the relative humidity goes down but the absolute humidity remains substantially constant. So, making room for overtemperature in the operating environment specification affects not only the upper temperature limit but also the lower relative humidity limit. The relationship between these parameters is shown in the climatogram (the relative humidity vs. temperature map) of the ODC operating environment, figure S.1.

The absolute humidity restrictions influence the operating environment in the following two ways:

i) Combination of high temperatures and high relative humidities are excluded. Such combinations could have negative influence on the performance and the life of ODCs.

ii) Combinations of low temperatures and low relative humidities are excluded. Such combinations are very unlikely to occur in worldwide normal office environments.

### S.4 Deviations from the IEC standard environment class

Apart from the change introduced by the overtemperature considerations above, there are a few more parameter values which are not based on IEC class 3K3. These are:

- Atmospheric pressure



Copyright International Organization for Standardization
Provided by IHS under license with ISO
No reproduction or networking permitted without license from IHS Not for Resale

The IEC 3K3 lower limit of 70 kPa has been extended to 60 kPa. ODCs according to this International Standard show no intrinsic pressure sensitivity and 70 kPa excludes some possible markets for ODCs.

- Absolute humidity

The IEC 3K3 value for the upper limit of 25 $g/m^3$ has been raised to 30 $g/m^3$ in view of some expected operation in portable devices outside the controlled office environment.

- Temperature

The maximum temperature around the ODC, i.e. room temperature plus overtemperature, has been limited to 55 °C (while IEC 3K3 + 20 °C would have become 60 °C). For ODCs according to this International Standard, however, the 55 °C limit is considered to be a physical limit above which operation (as well as storage) is not safe.

This means that equipment designers may want to ensure adequate cooling inside the drive especially when the room temperature approaches the upper IEC 3K3 limit of 40 °C.

- Further

The rates of change (the gradients) of temperature and relative humidity are not according to IEC 3K3.

### S.5 Wet bulb temperature specifications

Instead of specifying limits for the absolute humidity, some of the earlier standards for ODCs as well as those for other digital data storage media often use restrictions of the parameter

wet bulb temperature (unit: °C)

in order to avoid too severe combinations of high temperatures and high relative humidities.

In order to facilitate comparisons between different specifications, figure S.2 and table S.1 show wet bulb temperatures of interest for the ODC operating environment, as well as for the testing and storage environments. Since wet bulb temperatures vary slightly with the atmospheric pressure, the diagram is valid for the normal pressure of 101,3 kPa only.



Copyright International Organization for Standardization
Provided by IHS under license with ISO
No reproduction or networking permitted without license from IHS Not for Resale

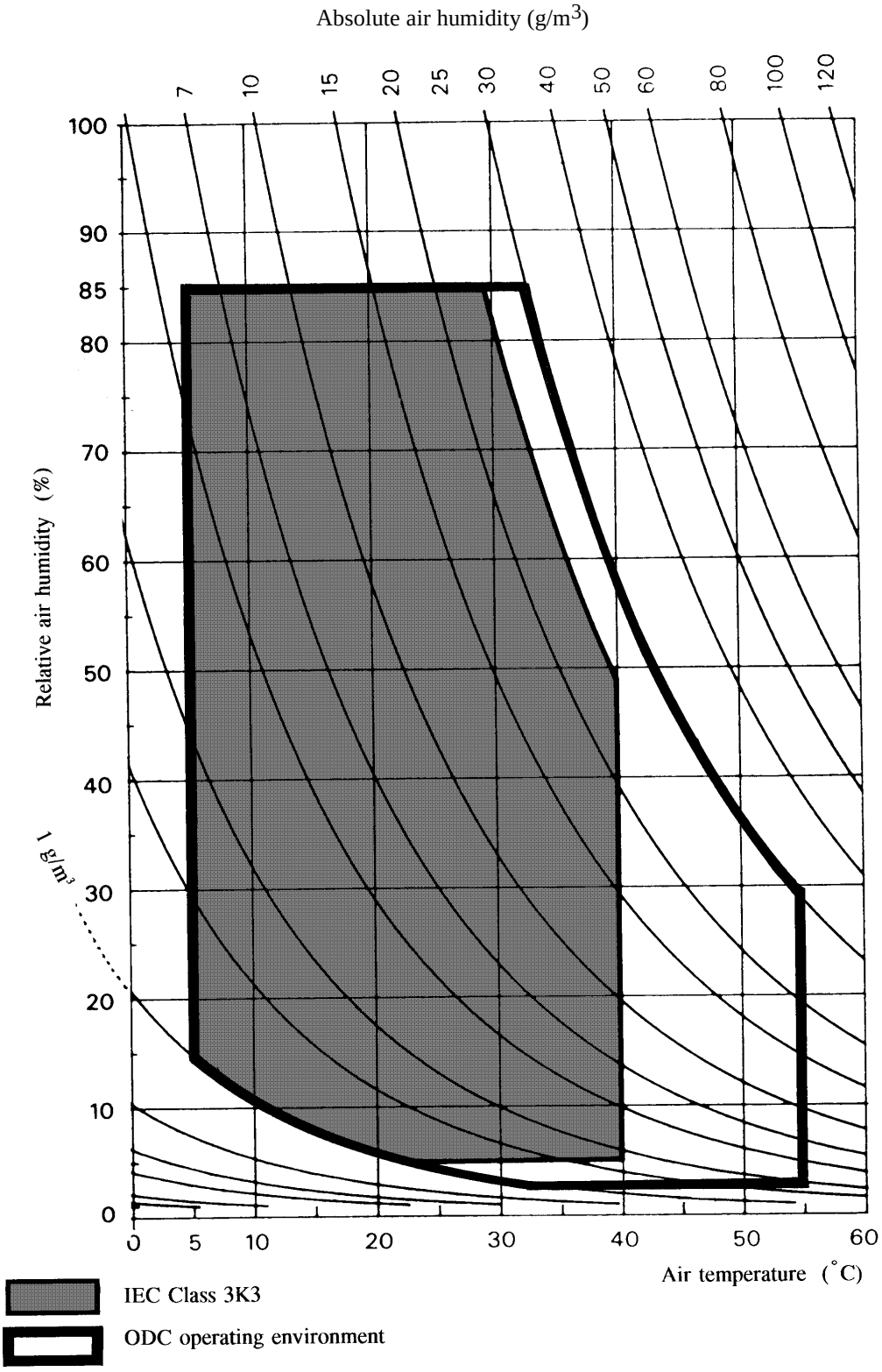


**Figure S.1 - Climatogram of IEC Class 3K3 and the ODC operating environment**



Copyright International Organization for Standardization
Provided by IHS under license with ISO
No reproduction or networking permitted without license from IHS
Not for Resale

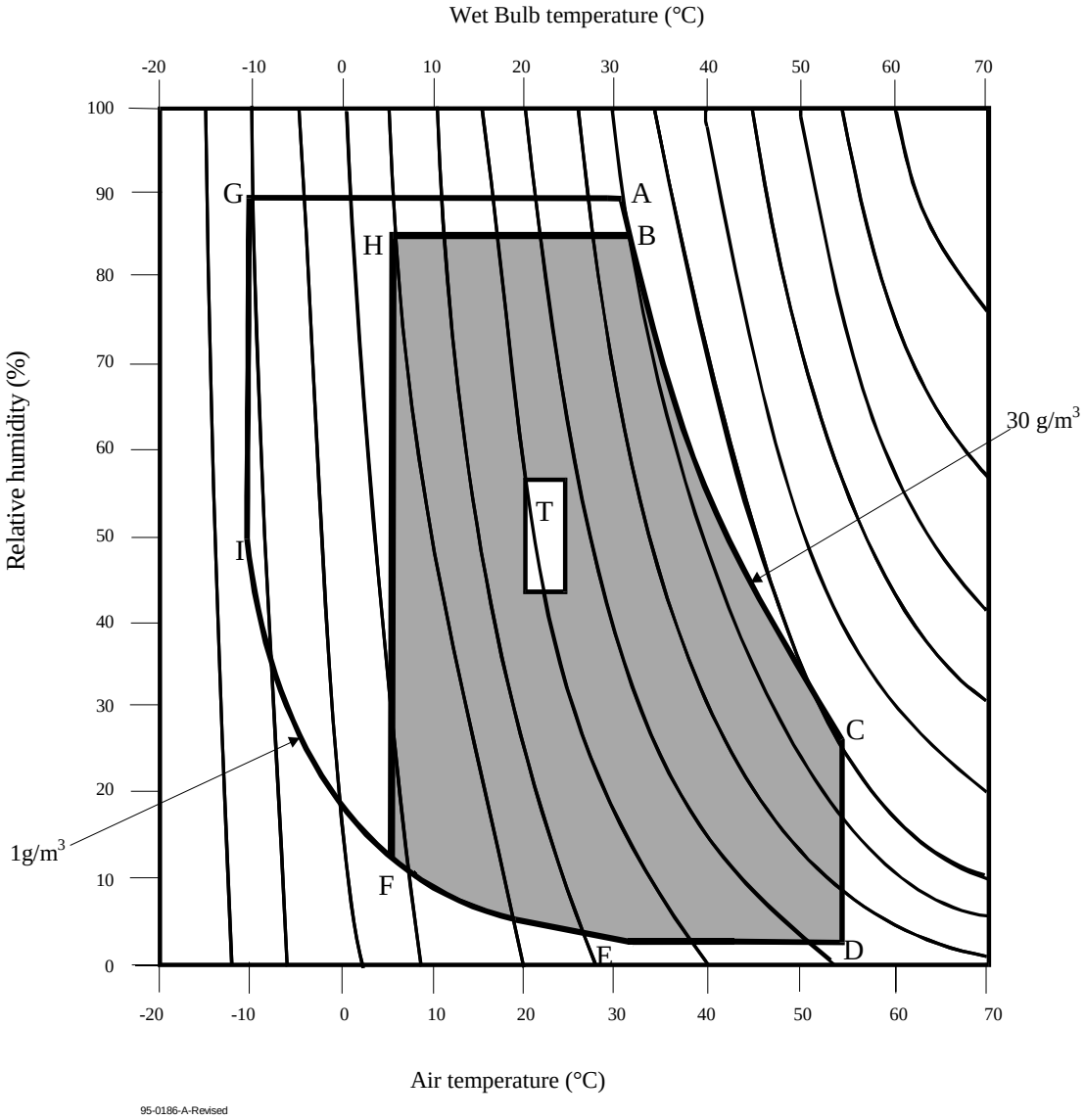


**Figure S.2 - Wet bulb temperatures of the operating and storage environments**

The points A to I and area T are defined in table S.1.



Copyright International Organization for Standardization
Provided by IHS under license with ISO
No reproduction or networking permitted without license from IHS
Not for Resale

**Table S.1 - Position of the main points of Figure S.2**

| | **Air Temperature °C** | **Relative Humidity %** | **Wet bulb temperature °C** |
|---|---|---|---|
| A | 31,7 | 90,0 | 30,3 |
| B | 32,8 | 85,0 | 30,6 |
| C | 55,0 | 28,8 | 35,5 |
| D | 55,0 | 3,0 | 22,2 |
| E | 31,7 | 3,0 | 12,1 |
| F | 5,0 | 14,7 | -1,4 |
| G | -10,0 | 90,0 | -10,3 |
| H | 5,0 | 85,0 | 3,9 |
| I | 10,0 | 46,8 | -11,6 |
| Test environment (T) | 23,0 °C ±2,0 °C | 50,0 % ±5,0 % | --- |
| Storage environment | is determined by A-B-C-D-E-F-G | | |
| Operating environment | is determined by B-C-D-E-F-H | | |



Copyright International Organization for Standardization
Provided by IHS under license with ISO
No reproduction or networking permitted without license from IHS Not for Resale

# Annex T
(informative)

## Transportation

### T.1 General

As transportation occurs under a wide range of temperature and humidity variations, for differing periods, by many methods of transport and in all parts of the world it is not possible to specify conditions for transportation or for packaging.

### T.2 Packaging

The form of packaging should be agreed between sender and recipient or, in the absence of such agreement, is the responsibility of the sender. It should take account of the following hazards.

#### T.2.1 Temperature and humidity

Insulation and wrapping should be designed to maintain the conditions for storage over the estimated period of transportation.

#### T.2.2 Impact loads and vibration

Avoid mechanical loads that would distort the shape of the cartridge.

Avoid dropping the cartridge.

Cartridges should be packed in a rigid box containing adequate shock absorbent material.

The final box should have a clean interior and a construction that provide sealing to prevent the ingress of dirt and moisture.



Copyright International Organization for Standardization
Provided by IHS under license with ISO
No reproduction or networking permitted without license from IHS Not for Resale

# Annex U
(informative)

## Sector retirement guidelines

This International Standard assumes that up to 4 095 sectors may be replaced in any of the following cases:

- A sector does not have at least one reliable ID field.
- Only one of the two ID fields in one sector is reliable, and the current sector number is contradictory to the one anticipated by the preceding sectors.
- A single defect of more than 40 bytes in a 2 048-byte sector is detected. (30 bytes in a 1 024-byte sector or 20 bytes in a 512-byte sector)
- The total number of defective bytes exceeds 60 bytes in a 2 048-byte sector (40 bytes in a 1 024-byte sector or 20 bytes in a 512-byte sector), or 5 bytes in one ECC interleave of a 2 048-byte sector (5 bytes in a 1 024-byte sector or 5 bytes in a 512-byte sector).
- For Type WO and WO-DOW, the total number of defective bytes in the SWF field, as specified in 15.11.3, exceeds 2.



Copyright International Organization for Standardization
Provided by IHS under license with ISO
No reproduction or networking permitted without license from IHS Not for Resale

# Annex V
(informative)

## Track deviation measurement

The deviation of a track from its nominal location is measured in the same way as a drive sees a track, i.e. through a tracking servo. The strength of the Reference Servo used for the test is in general less that the strength of the same servo in a normal drive. The difference in strength is intended for margins in the drive. The deviation of the track is related to the tracking error between the track and the focus of the optical beam, remaining after the Reference Servo. The tracking error directly influences the performance of the drive, and is the best criterion for testing track deviations.

The specification of the axial and radial deviations can be described in the same terms. Therefore, this annex applies to both axial and radial track deviations.

### V.1 Relation between requirements

The acceleration required by the motor of the tracking servo to make the focus of the optical beam follow the tracks on the disk (see 11.4.6 and 11.4.8) is a measure for the allowed deviations of the tracks. An additional measure is the allowed tracking error between the focus and the track (see 20.2.4). The relation between both is given in figure V.1 where the maximum allowed amplitude of a sinusoidal track deviation is given as a function of the frequency of the deviation. It is assumed in the figure that there is only one sinusoidal deviation present at a time.

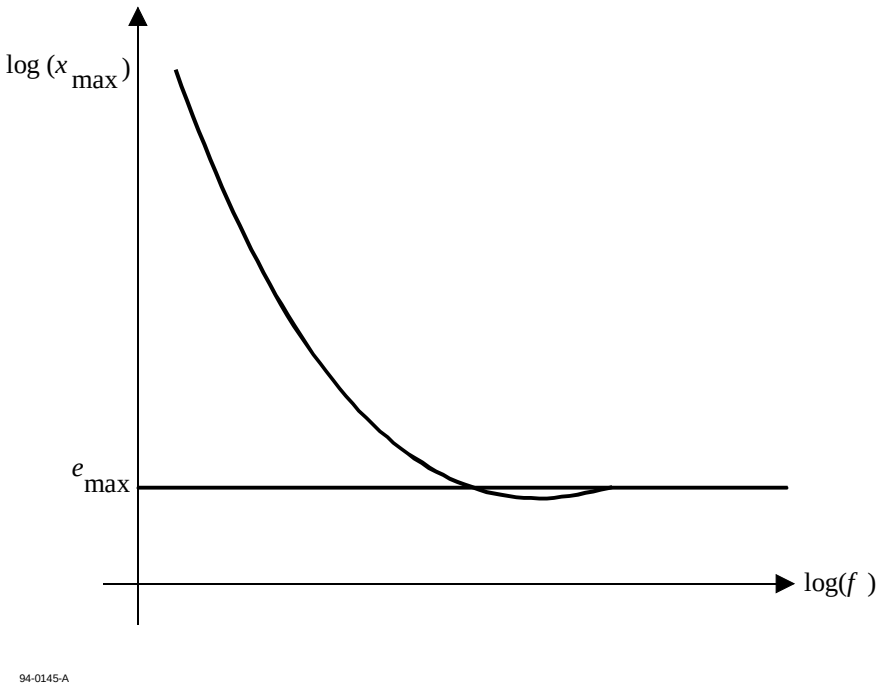


**Figure V.1 Maximum allowed amplitude of a single , sinusoidal track deviation**

At low frequencies the maximum allowed amplitude $x_{max}$ is given by

$$x_{max} = a_{max} / (2\pi f)^2, \quad (1)$$

where $a_{max}$ is the maximum acceleration of the servo motor.

At high frequencies the maximum allowed amplitude $x_{max}$ is given by



Copyright International Organization for Standardization
Provided by IHS under license with ISO
No reproduction or networking permitted without license from IHS Not for Resale

$$x_{max} = e_{max} \quad (2)$$

where $e_{max}$ is the maximum allowed tracking error. The connection between both frequency regions is given in V.3.

### V.2 Reference Servo

The above restrictions of the track deviations are equal to the restriction of the track deviations for a Reference Servo. A Reference Servo has a well-defined transfer function, and reduces a single, sinusoidal track deviation with amplitude $x_{max}$ to a tracking error $e_{max}$ as in figure V.1.

The open-loop transfer function of the Reference Servo shall be

$$H_s(i\omega) = \frac{1}{c}\left(\frac{\omega_0}{i\omega}\right)^2 \frac{1+\frac{i\omega c}{\omega_0}}{1+\frac{i\omega}{c\omega_0}} \quad (3)$$

where $i = \sqrt{-1}$, $\omega = 2\pi f$ and $\omega_0 = 2\pi f_0$, with $f_0$ the 0 dB frequency of the open-loop transfer function. The constant c gives the cross-over frequencies of the lead-lag network of the servo: the lead break frequency $f_1 = \frac{f_0}{c}$ and the lag break frequency $f_2 = f_0 \times c$. The reduction of a track deviation x to a tracking error e by the Reference Servo is given by

$$\frac{e}{x} = \frac{1}{1+H_s} \quad (4)$$

If the 0 dB frequency is specified as

$$\omega_0 = \sqrt{\frac{a_{max} c}{e_{max}}} \quad (5)$$

then a low-frequency track deviation with an acceleration $a_{max}$ will be reduced to a tracking error $e_{max}$, and a high frequency track deviation will not be reduced. The curve in figure V.1 is given by

$$x_{max} = e_{max}\left|1+H_s\right| \quad (6)$$

The maximum acceleration required from the motor of this Reference Servo is

$$a_{max}(\text{motor}) = e_{max}\omega^2\left|1+H_s\right| \quad (7)$$

At low frequencies $f < f_0 / c$ applies

$$a_{max}(\text{motor}) = a_{max}(\text{track}) = \frac{(\omega_0)^2 e_{max}}{c} \quad (8)$$

Hence, it is permitted to use $a_{max(motor)}$ as specified for low frequencies in 11.4.6 and 11.4.8 for the calculation of $a_0$ of a Reference Servo.



Copyright International Organization for Standardization
Provided by IHS under license with ISO
No reproduction or networking permitted without license from IHS Not for Resale

### V.3 Requirement for track deviations

The track deviations shall be such that, when tracking with a Reference Servo on a disk rotating at the specified frequency, the tracking error shall not be larger than $e_{max}$ during more than 7,2 µs.

The open-loop transfer function of the Reference Servo for axial and radial tracking shall be given by equation (3) within an accuracy such that $|1+H|$ does not differ by more than ± 20% from its nominal value in a bandwidth from 50 Hz to 170 kHz. The constant c shall be 3. The 0 dB frequency $\frac{a_0}{2\pi}$ shall be given by equation (5), where $a_{max}$ and $e_{max}$ for axial and radial tracking are specified in 20.2.4, 11.4.6 and 11.4.8.

### V.4 Measurement implementation

Three possible implementations for an axial or radial measurement system have been given below. $H_a$ is the open-loop transfer function of the actual tracking servo of the drive. $H_s$ is the transfer function for the Reference Servo as given in equation (3). $x$ and $y$ are the position of the track and the focus of the optical beam. $e_s$ is the tracking error after a Reference Servo, the signal of which has to be checked according to the previous paragraph.

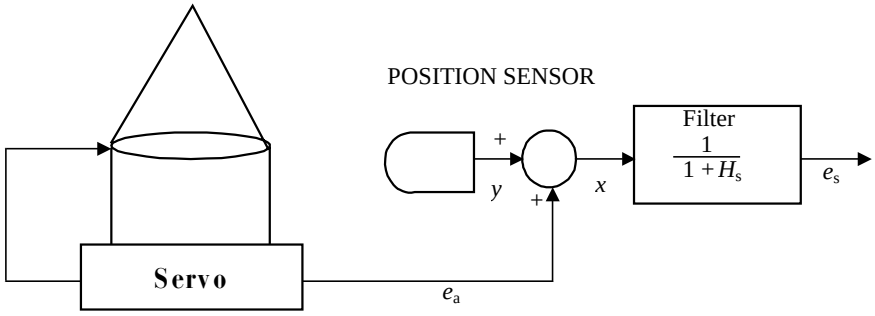


94-0081-B-Revised

**Figure V.2 - Implementation of a Reference Servo by filtering the track position signal with the reduction characteristics of the Reference Servo**



Copyright International Organization for Standardization
Provided by IHS under license with ISO
No reproduction or networking permitted without license from IHS Not for Resale

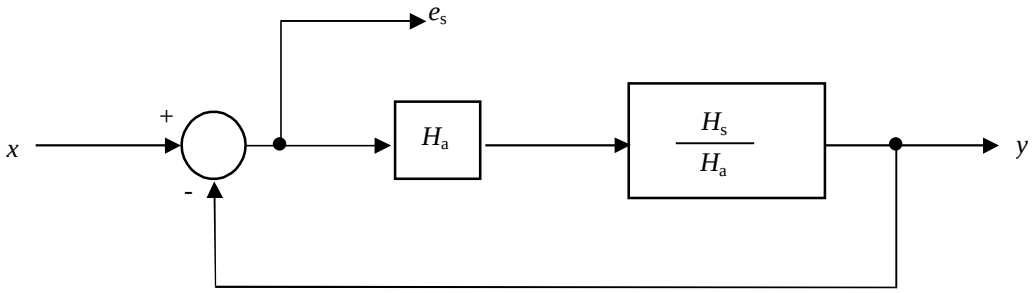


94-0082-B-Revised

**Figure V.3 - Implementation of a Reference Servo by changing the transfer function of the actual servo**

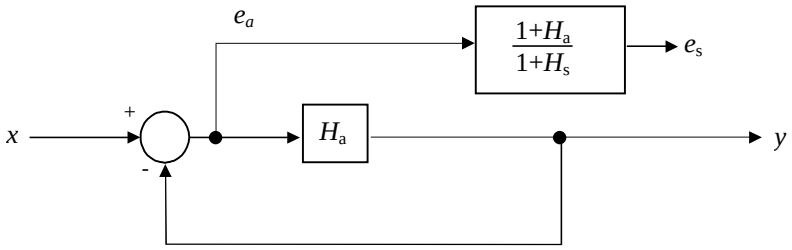


94-0083-B-Revised

**Figure V.4 - Implementation of a Reference Servo by changing the tracking error of the actual servo**

The optimum implementation depends on the characteristics $H_a$ and $H_s$. Good results for motors in leaf springs are often obtained by using separate circuits in a low and high frequency Channel. The implementation of figure V.2 is used in the low-frequency Channel, while that of figures V.3 or V.4 is used in the high-frequency Channel. The signals from both channels are added with a reversed cross-over filter to get the required tracking error. In the low-frequency Channel one can also use the current through the motor as a measure of the acceleration of the motor, provided the latter is free from hysteresis. The current must be corrected for the transfer function of the motor and then be converted to a tracking error with a filter with a transfer function $\frac{e}{a} = \frac{e}{x\omega^2}$ derived from equation (4).



Copyright International Organization for Standardization
Provided by IHS under license with ISO
No reproduction or networking permitted without license from IHS Not for Resale

# Annex W
(informative)

## Values to be implemented in existing and future standards

This International Standard specifies values for bytes which identify optical disk cartridges which conform to this International Standard. It is expected that other types of optical disk cartridges will be developed in future. It is therefore recommended that the following values be used for these other cartridges.

### W.1 Byte 0 of the Control Track PEP Zone

Settings of bits 6 to 4 have the following meanings:

| | |
|---|---|
| 000 | means Constant Angular Velocity (CAV) |
| 001 | means Constant Linear Velocity (CLV) |
| 010 | means Zoned Constant Angular Velocity (ZCAV) |
| 011 | means Zoned Constant Linear Velocity (ZCLV) |
| 110 | means Logical Zoned Constant Angular Velocity (Logical ZCAV) |

### W.2 Byte 7 of the Control Track PEP Zone

The following bit patterns have the indicated meanings.

| | |
|---|---|
| 0000 0000 | Read-only ODCs (ROM) |
| 0001 0000 | Write once ODCs using irreversible recording |
| 0001 0001 | WO ODC using MO recording |
| 0010 0000 | Rewritable ODCs using MO recording |
| 0101 0001 | WO ODCs using exchange coupled Direct Over Write (DOW) |
| 0110 0000 | Rewritable ODCs using exchange coupled DOW |
| 0011 0000 | Rewritable ODCs of the type phase change |
| 1001 0000 | Partial ROM of Write once ODCs |
| 1010 0000 | Partial ROM of MO |
| 1011 0000 | Partial ROM of phase change |
| 0110 0000 | Direct overwrite |
| 1110 0000 | Partially Embossed Direct overwrite |
| 0001 0011 | Write Once Direct overwrite |

Note that when the most significant bit is set to ONE, this indicates a partial ROM.

See also 17.3.2.1.4.



Copyright International Organization for Standardization
Provided by IHS under license with ISO
No reproduction or networking permitted without license from IHS Not for Resale

# Annex X
(informative)

## Measurement of the vertical birefringence of the substrate

This annex describes a non-contact measurement method for optical disk substrate birefringence which applies to both uncoated substrates and to disks coated with thinfilms. This technique will yield average or bulk values of both in-plane birefringence (IPB) and vertical birefringence (VB) with one procedure. The method uses a slightly modified variable angle spectroscopic ellipsometer (VASE), although the variable wavelength capability is unnecessary for a simple characterization at the operating point of this Standard. The method assumes the principal optical axes of the substrate align with the polar r, ϕ z directions of the disk, which is valid for injection molded plastic disks. Finally, the method described also assumes that the contribution of the MO ellipticity of the coated MO film(s) to the measured optical retardation is negligible compared to the contribution of the substrate material.

An ellipsometric measurement of the phase retardation between orthogonal polarization states for a range of incident angles is made to uniquely determine the substrate refractive indices for the three principal directions ($N_r$, $N_\phi$, $N_z$). This range of incident angles should be restricted only to limitations of the apparatus on the low angle side, and beam walk off on the high angle side. Angles ranging from -70° to +70° are recommended. Three angles would generally be the minimum necessary to establish VB.

When measuring a film-coated disk, the incident beam will reflect off both the top surface of the disk and the MO layers (see figure W.1). Since the substrate is relatively thin (- 1,2 mm), both of these reflections can enter the detector. To eliminate the undesirable top surface reflected beam, a simple beam stop is employed. This small blocking element consists of a thin (<0,5 mm) but stiff opaque strip which is inserted at the reflection point of the incident beam and which is in close proximity with the top of the disk. Adjust the position of the strip to achieve maximum reflected signal at the point of reflection. In this situation, the top surface reflection is blocked and only the bottom reflection off the internal surface (thin film surface) is allowed to pass to the polarization detector (see figure W.1). (CAUTION: If the strip is moved too close to the incident source, the main beam is blocked and the signal drops. If the strip is moved too far from the reflection point, both reflections are blocked and again the signal drops).

For clear substrates, the VASE can be used in the straight-through mode and the measurements made in transmission and again no contact is required.

For a disk where the principal optical axes are aligned with the cylindrical coordinates of the disk (which is almost universally the case), the following equation expresses the retardation as a function of angle of incidence to the indices of the disk: $N_r$, $N_\phi$, $N_z$. The retardation data are regression fit to the non-linear analytical expression given below, and the indices are determined as free parameters.

$$\Delta = d \times \left( \sqrt{N_r^2 - \sin^2(\theta)} - \frac{N_\phi}{N_z} \sqrt{N_z^2 - \sin^2(\theta)} \right)$$

where $\Delta$ is the retardation and $d$ is the thickness of the disk. The birefringence results from the differences between the indices

In plane: $\Delta N_{in} = N_r - N_\phi$
Vertical: $\Delta N_{vert} = 0.5\,(N_r + N_\phi) - N_z$

The dimensionless birefringence can be expressed in length units by multiplying $\Delta N_{in}$ or $\Delta N_{vert}$ by the substrate thickness $d$. In this case, the birefringence is expressed as nm of retardation.



Copyright International Organization for Standardization
Provided by IHS under license with ISO
No reproduction or networking permitted without license from IHS Not for Resale

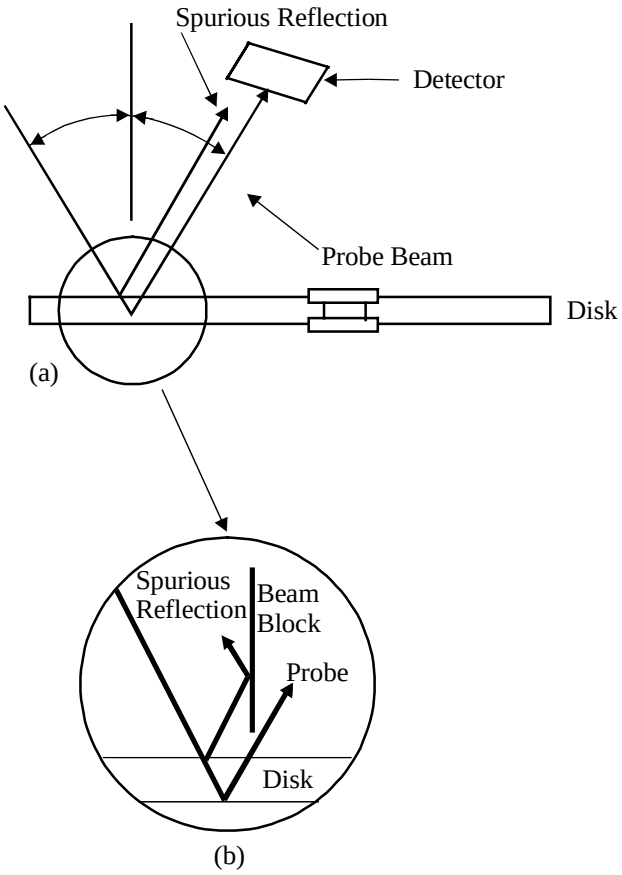


**Figure X.1 (a) - Origin of spurious reflection. (b) - Non-contact beam blocking technique for eliminating spurious reflection.**



Copyright International Organization for Standardization
Provided by IHS under license with ISO
No reproduction or networking permitted without license from IHS
Not for Resale

# Annex Y
(informative)

## Guidelines for the use of Type WO and WO-DOW ODCs

This annex lists some important points to be observed when using the Type WO and WO-DOW ODCs specified by this Standard.

a) Read the PEP and/or the SFP when the ODC is inserted into the drive to ascertain the media type, so as to enable and/or disable the appropriate host commands. If the drive is not intended to support this type of ODC, reject the disk with an appropriate error message and disallow any further operations on the disk.

b) Read the DDS when the disk is inserted into the drive to ascertain if the disk has been initialized. If it has, disallow re-initialization. If it has not been initialized, disallow access to the write once zone.

c) Erase the write once zone before initialization is complete. Record the DDSs only at the end of initialization to allow incomplete initializations to be detected.

Before writing a sector, it must be determined whether or not the sector has been already written. This can be done in two ways. One method is to check the contents of the flag field between the Sector Header and the Data Record, and if recorded, the sector has been written and no attempt should be made to write the sector again.

The second method is to read the data record and inspect the contents of the SWF field. If this field contains 8 (FF) bytes, the sector has been written and no attempt should be made to write the sector again. These tests do not apply to the sectors that make up the DMAs.

d) Disallow commands that can directly or indirectly alter written data such as: SCSI Erase, SCSI Reassign Blocks, SCSI Update Block.

e) Disallow the SCSI Write Long command. Always write user data with SWF, CRC, and ECC fields as specified by this International Standard.



Copyright International Organization for Standardization
Provided by IHS under license with ISO
No reproduction or networking permitted without license from IHS Not for Resale

# Annex Z
(informative)

## Laser power calibration for evaluation of media power sensitivity

### Z.1 Variance of testing condition

For measurement of media power sensitivity specified in clause 25.3.4, laser power of the media tester should be calibrated carefully since the values of the media power sensitivity C are easily affected by the various variation allowed for Reference drive. The laser spot profile on the magnetic layer varies with optical variation allowed for Reference drive specified in clause 9.2. Table Z.1 shows the best and the worst conditions allowed for Reference drive from the point of view of the write power sensitivity. The peak temperature for the worst condition is estimated to decrease by 21% from that for the best condition. Therefore media power sensitivity C should be carefully evaluated.

**Table Z.1 The best and worst conditions allowed for Reference drive.**

| | **Best condition** | **Worst condition** |
|---|---|---|
| $\lambda$ | 675 nm | 695 nm |
| $\lambda$/NA | 1,227 µm | 1,263 µm |
| D/W | 0,8 | 0,9 |
| Variance of wave front at the optical head | 0 | $\lambda^2/330$ |
| Disk tilt | 0 | 2,8 mrad |
| Variation of Substrate thickness | 0 | 50 µm |

### Z.2 Power calibration

Laser power calibration of the tester should be done in the following scheme. Use of a high speed front power monitor is recommended for precise calibration.

Step 1 : Calibrate high-speed front monitor by power meter (figure Z.1).

- The calibration can be done in a d.c. laser operation with a d.c. power meter.
- For the purpose of observing the write pulse shape during writing, high speed (>100MHz) front power monitor is recommended.



Copyright International Organization for Standardization
Provided by IHS under license with ISO
No reproduction or networking permitted without license from IHS Not for Resale

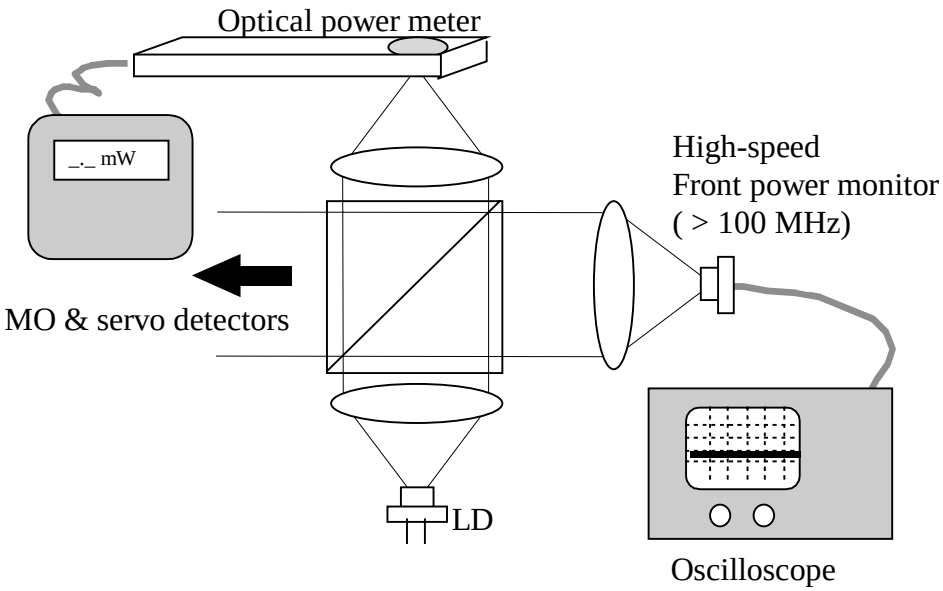


**Figure Z.1 - Calibration of front power monitor**

Step 2 : Directly observe the write pulse shape during writing (figure Z.2).

- Pulse power in focused condition is different from that in un-focused condition because of the self coupled effect of the laser diode.
- Pulse power, pulse duration, and bias power level should be carefully observed in real testing condition.
- Check if shapes of three kinds of pulses, which is isolated pulses for 2T marks and two 2T spaced pulses for 4T marks, are completely identical. If not, significant error will appear in the measurement of C and $E_{th}$.



--`,,```,,,,````-`-`,,`,,`,`,,`---

Copyright International Organization for Standardization
Provided by IHS under license with ISO
No reproduction or networking permitted without license from IHS Not for Resale

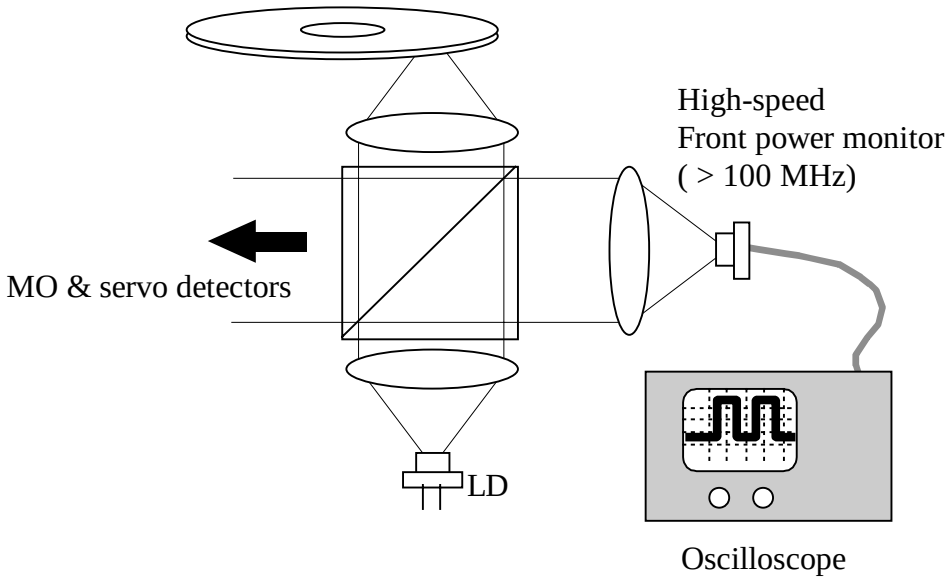


**Figure Z.2 - Measurement of pulse power and pulse width**

Step 3 : Measure write pulse power and pulse width with appropriate filters.

- Ringing can be removed by a (Gaussian) low pass filter with a cut-off frequency of 80 MHz (figure Z.3a)
- For precise pulse energy measurement, average power level measurement is recommended unless high speed front monitor is available (figure Z.3b).

Notes for measurement:

Bias power level

Bias power level $P_b$ should be measured carefully (with an accuracy of ± 0,05 mW) because error in the $P_b$ measurement may result in a significant error in measured C-value.

Disk temperature

Disk temperature should be kept at 25°C±1°C. Internal temperature may rise if the tester lid is closed.

Stray light

The stray light within the optical head may enter the objective lens and form a stray beam spot. Even if the temperature increase in the optical beam spot is small, the measurement for the light power through the objective lens may large.

Contamination of optical components (especially the objective lens)

If the light is absorbed by dust or other debris, the light power through the objective lens decreases. This can be measured by the power meter and does not, therefore, result in any complications. If the light is diverted instead of being absorbed, however, not all of the light power through the objective lens is valid for the temperature-up of the media; therefore, variance results. Frequent cleaning is required.



Copyright International Organization for Standardization
Provided by IHS under license with ISO
No reproduction or networking permitted without license from IHS Not for Resale

Beam spot size

Before the measurement of media power sensitivity, the beam profile of the tester should be checked by optical knife edge profiler. Unless the measured spot diameter is far from 1,08 µm, which is the best diameter for Reference drive, the above conditions such as disk tilt should be carefully adjusted.

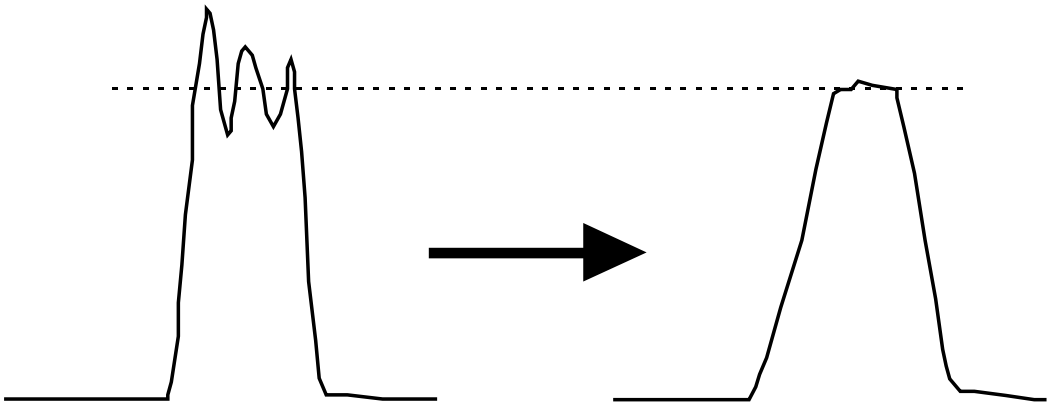

**Figure Z.3a – Elimination of ringing by LPF (~ 100 MHz)**

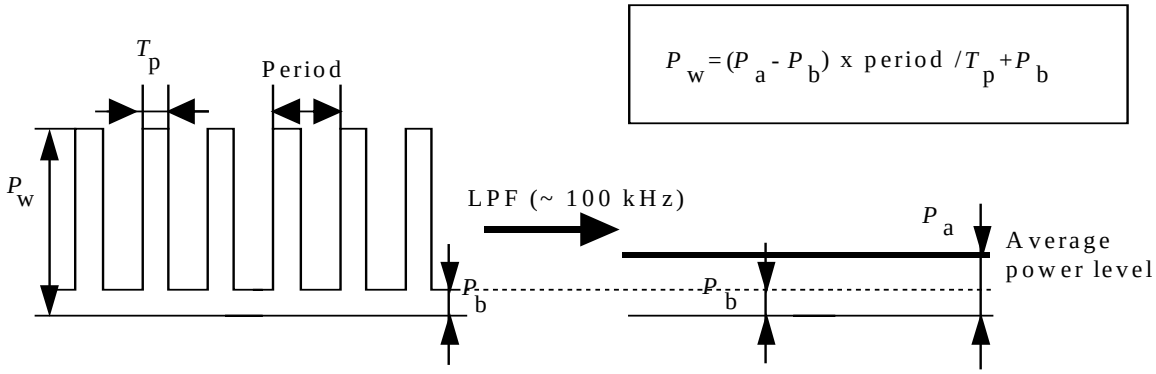


**Figure Z.3b - Determination of pulse power from average power level**

**Figure Z.3 - Precise determination of pulse power from average power level**



Copyright International Organization for Standardization
Provided by IHS under license with ISO
No reproduction or networking permitted without license from IHS Not for Resale

© ISO/IEC

**ICS 35.220.30**

Price based on 148 pages

Copyright International Organization for Standardization
Provided by IHS under license with ISO
No reproduction or networking permitted without license from IHS

Not for Resale