INTERNATIONAL STANDARD

ISO/IEC 14766

First edition
1997-04-01

Information technology — Telecommunications and information exchange between systems — Use of OSI applications over the Internet Transmission Control Protocol (TCP)

Technologies de l'information — Télécommunications et échange d'information entre systèmes — Emploi d'applications OSI sur protocole de commande de transmission entre réseaux (TCP)

Reference number
ISO/IEC 14766:1997(E)

Copyright International Organization for Standardization
Provided by IHS under license with ISO
No reproduction or networking permitted without license from IHS

Not for Resale

Foreword

ISO (the International Organization for Standardization) and IEC (the International Electrotechnical Commission) form the specialized system for worldwide standardization. National bodies that are members of ISO or IEC participate in the development of International Standards through technical committees established by the respective organization to deal with particular fields of technical activity. ISO and IEC technical committees collaborate in fields of mutual interest. Other international organizations, governmental and non-governmental, in liaison with ISO and IEC, also take part in the work.

In the field of information technology, ISO and IEC have established a joint technical committee, ISO/IEC JTC 1. Draft International Standards adopted by the joint technical committee are circulated to national bodies for voting. Publication as an International Standard requires approval by at least 75 % of the national bodies casting a vote.

International Standard ISO/IEC 14766 was prepared by Joint Technical Committee ISO/IEC JTC 1, *Information technology*, Subcommittee SC 6, *Telecommunications and information exchange between systems*.

Annex A of this International Standard is for information only.

© ISO/IEC 1997

All rights reserved. Unless otherwise specified, no part of this publication may be reproduced or utilized in any form or by any means, electronic or mechanical, including photocopying and microfilm, without permission in writing from the publisher.

ISO/IEC Copyright Office • Case postale 56 • CH-1211 Genève 20 • Switzerland

Printed in Switzerland

Copyright International Organization for Standardization
Provided by IHS under license with ISO
No reproduction or networking permitted without license from IHS
Not for Resale

Information technology – Telecommunications and information exchange between systems – Use of OSI applications over the Internet Transmission Control Protocol (TCP)

1 Scope

This International Standard defines a mechanism which allows OSI upper layers (all session, presentation, and application entities) to operate over the Internet Transmission Control Protocol (TCP) without being aware that they are running on a TCP/IP internetwork.

It provides similar functionality to ISO/IEC Transport Protocol Class 4.

It does not provide a gateway facility between Internet and OSI applications.

2 Normative references

The following standards contain provisions which, through reference in this text, constitute provisions of this International Standard. At the time of publication, the editions indicated were valid. All standards are subject to revision, and parties to agreements based on this International Standard are encouraged to investigate the possibility of applying the most recent editions of the standards indicated below. Members of IEC and ISO maintain registers of currently valid International Standards.

2.1 International Standards

ISO/IEC 8072:1996, *Information technology - Open Systems Interconnection - Transport service definition.*

2.2 Other references

All references in this subclause were correct at the time of approval of this International Standard. The provisions of the referenced specifications, as indicated in this subclause, are valid within the context of this International Standard. The reference to a specification within this International Standard does not give it any further status within ISO/IEC; in particular, it does not give the referenced specification the status of an International Standard.

RFC 1006 *ISO Transport Service on top of the TCP, Request for Comments 1006, May 1987, Internet Standard 35.*

Copyright International Organization for Standardization
Provided by IHS under license with ISO
No reproduction or networking permitted without license from IHS Not for Resale

3 Mechanism for interconnecting OSI applications

Figure 1 shows the connection between two OSI TS-Users operating in accordance with ISO/IEC 8072 via a TCP/IP based network. The adaptation which is bounded by the dotted lines is described in RFC 1006 (Internet Standard 35). Systems, for which conformance to this International Standard is claimed, shall implement this adaptation mechanism when interconnecting OSI applications via Internet networks.

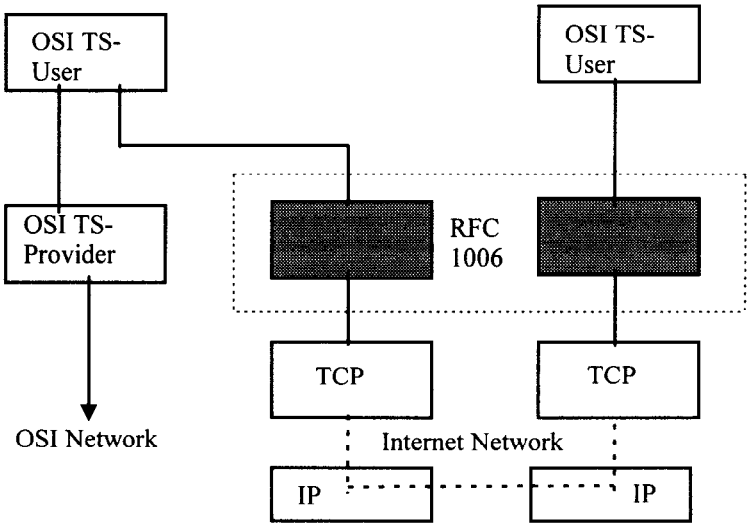

Figure 1 - Functional diagram

Copyright International Organization for Standardization
Provided by IHS under license with ISO
No reproduction or networking permitted without license from IHS
Not for Resale

Annex A
(informative)

Availability of RFCs

RFCs are freely available in electronic format from numerous sources by using a variety of access mechanisms. For example, RFC 1006 may be obtained in ASCII text format by sending an e-mail message to the Internet Network Information Center Directory and Database Services automated mail server at the address

mailserv@ds.internic.net

In the body of the message, include the following command:

send rfc1006.txt

Copyright International Organization for Standardization
Provided by IHS under license with ISO
No reproduction or networking permitted without license from IHS Not for Resale

© ISO/IEC

ICS 35.100.01

Descriptors: data processing, information interchange, telecommunications, network interconnection, open systems interconnection, data transmission.

Price based on 3 pages

Copyright International Organization for Standardization
Provided by IHS under license with ISO
No reproduction or networking permitted without license from IHS

Not for Resale