FINAL
DRAFT

# AMENDMENT

**ISO/IEC 14709-1:1997 FDAM 1**

ISO/IEC JTC **1**

Secretariat: **ANSI**

Voting begins on:
**2004-04-08**

Voting terminates on:
**2004-06-08**

# Information technology — Configuration of Customer Premises Cabling (CPC) for applications —

## Part 1: Integrated Services Digital Network (ISDN) basic access

## AMENDMENT 1

*Technologies de l'information — Configuration du câblage dans les locaux d'usagers (CPC) pour les applications —*

*Partie 1: Accès de base au réseau numérique à intégration de services (RNIS)*

*AMENDEMENT 1*

**Please see the administrative notes on page iii**

RECIPIENTS OF THIS DRAFT ARE INVITED TO SUBMIT, WITH THEIR COMMENTS, NOTIFICATION OF ANY RELEVANT PATENT RIGHTS OF WHICH THEY ARE AWARE AND TO PROVIDE SUPPORTING DOCUMENTATION.

IN ADDITION TO THEIR EVALUATION AS BEING ACCEPTABLE FOR INDUSTRIAL, TECHNOLOGICAL, COMMERCIAL AND USER PURPOSES, DRAFT INTERNATIONAL STANDARDS MAY ON OCCASION HAVE TO BE CONSIDERED IN THE LIGHT OF THEIR POTENTIAL TO BECOME STANDARDS TO WHICH REFERENCE MAY BE MADE IN NATIONAL REGULATIONS.

Reference number
ISO/IEC 14709-1:1997/FDAM 1:2004(E)

© ISO/IEC 2004

Copyright International Organization for Standardization
Reproduced by IHS under license with ISO
No reproduction or networking permitted without license from IHS

Not for Resale

**PDF disclaimer**

This PDF file may contain embedded typefaces. In accordance with Adobe's licensing policy, this file may be printed or viewed but shall not be edited unless the typefaces which are embedded are licensed to and installed on the computer performing the editing. In downloading this file, parties accept therein the responsibility of not infringing Adobe's licensing policy. The ISO Central Secretariat accepts no liability in this area.

Adobe is a trademark of Adobe Systems Incorporated.

Details of the software products used to create this PDF file can be found in the General Info relative to the file; the PDF-creation parameters were optimized for printing. Every care has been taken to ensure that the file is suitable for use by ISO member bodies. In the unlikely event that a problem relating to it is found, please inform the Central Secretariat at the address given below.

## Copyright notice

This ISO document is a Draft International Standard and is copyright-protected by ISO. Except as permitted under the applicable laws of the user's country, neither this ISO draft nor any extract from it may be reproduced, stored in a retrieval system or transmitted in any form or by any means, electronic, photocopying, recording or otherwise, without prior written permission being secured.

Requests for permission to reproduce should be addressed to either ISO at the address below or ISO's member body in the country of the requester.

ISO copyright office
Case postale 56 • CH-1211 Geneva 20
Tel. + 41 22 749 01 11
Fax + 41 22 749 09 47
E-mail copyright@iso.org
Web www.iso.org

Reproduction may be subject to royalty payments or a licensing agreement.

Violators may be prosecuted.



© ISO/IEC 2004 – All rights reserved

Copyright International Organization for Standardization
Reproduced by IHS under license with ISO
No reproduction or networking permitted without license from IHS

Not for Resale

In accordance with the provisions of Council Resolution 21/1986, this document is **circulated in the English language only**.

© ISO/IEC 2004 All rights reserved
Copyright International Organization for Standardization
Reproduced by IHS under license with ISO
No reproduction or networking permitted without license from IHS
Not for Resale

--`,,`,,-`-`,,`,,`,`,,`---

Copyright International Organization for Standardization
Reproduced by IHS under license with ISO
No reproduction or networking permitted without license from IHS

Not for Resale

# ISO/IEC 14709-1
# (first edition 1997-09-01)
# Information technology - Configuration of customer premises cabling for applications - Part 1: ISDN basic access

## Amendment 1

## FOREWORD

This amendment has been prepared by ISO/IEC JTC 1, Information Technology, Subcommittee 25, Interconnection of information technology equipment.

The text of this amendment is based on the following documents:

| FDIS | Report on voting |
|---|---|
| XX/XX/FDIS | XX/XX/RVD |

Full information on the voting for the approval of this amendment can be found in the report on voting indicated in the above table. The committee has decided that the contents of the base publication and its amendments will remain unchanged until 20XX. At this date, the publication will be

- reconfirmed;
- withdrawn;
- replaced by a revised edition, or
- amended.



Copyright International Organization for Standardization
Reproduced by IHS under license with ISO
No reproduction or networking permitted without license from IHS Not for Resale

## *Foreword*

***Change*** *the last line of the existing text to read:*

"Annex A of this part of ISO/IEC 14709 is normative, Annex B is for information only."

***Add*** *as fourth paragraph:*

“The requirements in this part of ISO/IEC 14709 have been derived from ITU-T 1) Recommendation I.430 (Blue Book) and ETS 300 012. The reader is referred to IEC 60950-1 for general safety requirements and to IEC 61000-4 and CISPR 22 for EMC requirements (see Bibliography).

***Add*** *a fifth paragraph:*

"Category 3 and category 5 cable definitions and requirements used in this standard are from the 1st edition IS11801: 1995. Category 5 cable requirements in ISO/IEC 11801:1995 (1st edition) are less stringent and do not include additional requirements specified in ISO/IEC 11801:2002 (2nd edition)."

## *Introduction*

***Add*** *as second paragraph*

"This amendment replaces 6.6 of ISO/IEC 14709-1:1997 by a generalised specification of the star configuration as another configuration option for dedicated ISDN cabling."

## *2 normative references*

***Replace:*** IEC 603-7 with IEC 60603-7.
*This change shall also be implemented at all other places in the document: 6.1 two times, 7.5 two times.*

## *4.1 Abbreviations*

***Add***
CP consolidation point

## *6 Configurations*

### *6.6 The star configuration*

***Replace*** *the existing 6.6 by the following text and* ***renumber*** *the figures from 6.7 onwards according.*

### 6.6 The star configuration

The star configuration which is shown in Figure 6a is primarily intended for the domestic and small office/home office (SOHO) environment.

**Requirements**

The NT shall be configured in short passive bus mode. The maximum number of branches shall be 4 (four). The maximum length of cabling from the NT to the farthest telecommunications outlet in any branch (i.e. $d_8$ + $d_9$) shall not exceed

1) International Telecommunication Union - Telecommunications Standardization Sector (formerly CCITT)



Copyright International Organization for Standardization
Reproduced by IHS under license with ISO
No reproduction or networking permitted without license from IHS Not for Resale

a) 50 m, if either installed balanced cables match Category 3 or if $d_8$ and $d_9$ are implemented mixing Category 3 and Category 5 (ISO/IEC 11801:1995) cables. Extension cords shall not be used to extend the cabling distance from NT to the socket beyond 50 m;

b) 100 m, if installed balanced cables match Category 5 (ISO/IEC 11801:1995). Extension cords shall not be used to extend the cabling distance from NT to the socket beyond 100 m.

NOTE For this application the minimum requirements of Category 3 cables and Category 5 cables as specified in the first edition of ISO/IEC 11801:1995 are applicable, see Annex A. For this application the low frequency requirements given in Annex A herein are no longer explicitly specified in the second edition of ISO/IEC 11801: 2002.

It is recommended not to use spurs to connect telecommunications outlets. However, if spurs are present they shall not exceed 1 m.

The polarity of each wire of the balanced cable unit shall be maintained throughout the cabling.

The 100 Ω termination resistors shall be permanently connected to the star point for proper administration of this configuration.

The maximum number of telecommunications outlets in a branch may exceed 1 (one) provided that the maximum number of TEs attached does not exceed 4 (four).

The individual branches of the star configuration may be connected at the star point in the following ways:

— hardwired (as indicated in Figure 6a);

— using connecting hardware in accordance with ISO/IEC 11801 (see Figure 6b).



Copyright International Organization for Standardization
Reproduced by IHS under license with ISO
No reproduction or networking permitted without license from IHS Not for Resale

a) star configuration

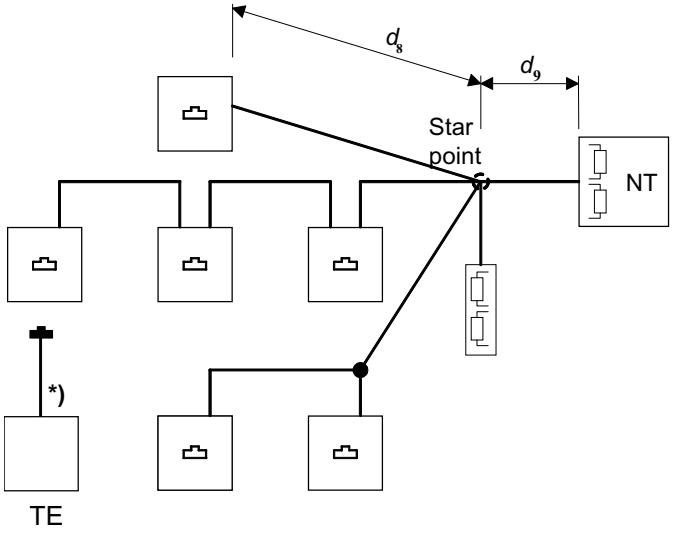


$d_8$ length from the star point to the farthest telecommunications outlet in any branch

$d_9$ length from the star point to NT

*) TE connecting cord or integral cord

Maximum number of telecommunications outlets: 12 (twelve)

Maximum number of terminals: 4 (four)

b) implementation example of connections at the star point

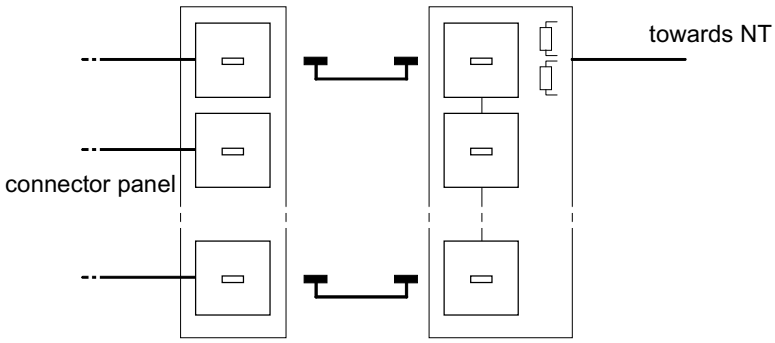


**Figure 6 – ISDN star configuration**

### 6.7.1 General

*Figure (old number 6, now 7): Replace TP with CP and add the following Note*

NOTE in installations that were implemented on basis of ISO/IEC:1995 and 2000 TPs may be found instead of CPs.

## *Annex A*

***Add** the following annex and **rename** the existing annex A to Bibliography.*

**Annex A**
(normative)

**Characteristics of Category 3 and Category 5 (ISO/IEC 11801:1995) cables**

The general electrical characteristics of installed balanced 100 Ω Category 3 as well as of 100 Ω and 120 Ω Category 5 cables are given in Table A.1. The required attenuation of these cables is given in Table A.2. The requirements in Table A.1 and Table A.2 are derived from the category 3 and category 5 cable requirements specified in the 1st edition ISO/IEC 11801: 1995. The Category 5 cable referenced in the 2nd edition ISO/IEC 11801:2002 is the recommended media for new installations.



Copyright International Organization for Standardization
Reproduced by IHS under license with ISO
No reproduction or networking permitted without license from IHS Not for Resale

**Table A.1 - General electrical characteristics of installed balanced 100 Ω and 120 Ω cables**

| Electrical characteristic | | Frequency | Cable type | | |
|---|---|---|---|---|---|
| | | MHz | 100 Ω Category 3 | 100 Ω Category 5 | 120 Ω Category 5 |
| a) | Characteristic impedance $Z_0$ Ω | 0,064 [b] | 125 ± 25 | 125 ± 25 | 125 ± 45 |
| | | ≥ 1 | 100 ± 15 | 100 ± 15 | 120 ± 15 |
| b) | Maximum d.c. loop resistance Ω/100 m | d.c. | 30 | | |
| c) | Minimum velocity of propagation | 1 | 0,4 × *c* | 0,60 × *c* | |
| | | 10 | 0,6 × *c* | 0,65 × *c* | |
| | | 100 | N/A | 0,65 × *c* | |
| d) | Maximum resistance unbalance % | d.c. | 3 | | |
| e) | Maximum capacitance unbalance pair to ground [b] pF/km | 0,000 8 or 0,001 | 1 600 | | |
| f) | Maximum transfer impedance [a] mΩ/m | 10 | 100 | | |
| g) | Minimum d.c. insulation resistance MΩ × km | d.c. | 150 | | |
| h) | Dielectric strength conductor/conductor and conductor/screen | d.c. or a.c. | 750 V, 1 min or 500 V, 1 min | | |
| i) | Minimum structural return loss dB at 100 m cable length | 1 [b] to 100 | ffs | | |

[a] Only applicable when screens are present. Other measurement methods and values covering the coupling parameters of screened and unscreened cables are under consideration.

[b] These requirements are no longer explicitly specified in the 2nd edition of ISO/IEC 11801: 2002. Category 5 cables (having minimum media requirements for ISO/IEC 11801 Class D channels) will in practice meet these requirements according to the backward compatibility requirements, wherein a transmission channel that meets the minimum requirements of ISO/IEC 11801: 2002 always meets or exceeds the transmission requirements of ISO/IEC 11801: 1995.



Copyright International Organization for Standardization
Reproduced by IHS under license with ISO
No reproduction or networking permitted without license from IHS Not for Resale

**Table A.2 - Attenuation of installed balanced 100 Ω and 120 Ω cables**

| Electrical characteristic | Frequency MHz | Cable type | | |
|---|---|---|---|---|
| | | 100 Ω Category 3 | 100 Ω Category 5 | 120 Ω Category 5 |
| Maximum attenuation dB/100 m | 0,064 [a] | 0,9 | 0,8 | 0,8 |
| | 0,256 [a] | 1,3 | 1,1 | 1,1 |
| | 0,512 [a] | 1,8 | 1,5 | 1,5 |
| | 0,772 [a] | 2,2 | 1,8 | 1,8 |
| | 1 | 2,6 | 2,1 | 2,0 |
| | 4 | 5,6 | 4,3 | 3,8 |
| | 10 | 9,8 | 6,6 | 5,7 |
| | 16 | 13,1 | 8,2 | 7,1 |
| | 20 | N/A | 9,2 | 8,0 |
| | 31,25 | N/A | 11,8 | 10,0 |
| | 62,5 | N/A | 17,1 | 15,0 |
| | 100 | N/A | 22,0 | 19,0 |

[a] These requirements are no longer explicitly specified in the 2nd edition of ISO/IEC 11801:2002. Category 5 cables (having minimum media requirements for ISO/IEC 11801 Class D channels) will in practice meet these requirements according to the backward compatibility requirements, wherein a transmission channel that meets the minimum requirements of ISO/IEC 11801:2002 always meets or exceeds the transmission requirements of ISO/IEC 11801: 1995.



--`,,`-`-`,,`,,`,`,,`---
Copyright International Organization for Standardization
Reproduced by IHS under license with ISO
No reproduction or networking permitted without license from IHS Not for Resale

## *Annex B*

***Change*** *table B.1 to read:*

**Table B.1: Examples of recommended maximum distances for typical installations**

| No. | Cable type | $d_1$ m | $d_2$ m | $d_3$ m | $d_4$ m | $d_5$ m | $d_6$ m | $d_7$ m | $d_8$ m | $d_9$ m | Source of specification |
|---|---|---|---|---|---|---|---|---|---|---|---|
| 1 | 0,5 mm CW1308 | 400 | 100 | 45 | 250 | FFS [4] | FFS | FFS | FFS | FFS | UK |
| 2 | 0,5 mm CW1700 | 800 | 150 | 70 | 400 | FFS | FFS | FFS | FFS | FFS | UK |
| 3 | 0,5 mm CW1750 | 800 | 150 | 70 | 400 | FFS | FFS | FFS | FFS | FFS | UK |
| 4 | J-Y(ST)Y 2x2x0,6 | 600 [1] | 120 [1] | 25 [2] | 450 | FFS | FFS | FFS | FFS | FFS | Germany |
| 5 | J-Y(ST)Y>10x2x0,6 | 700 [1] | 130 [1]) | 27 [2] | 495 | FFS | FFS | FFS | FFS | FFS | Germany |
| 6 | J-2Y(ST)Y 2x2x0,6 ST III BD | 900 [1] | 180 [1] | 35 [2] | 615 | FFS | FFS | FFS | FFS | FFS | Germany |
| 7 | J-2Y(ST)Y>10x2x0,6 ST III BD | 1 000 [1] | 180 [1] | 35 [2] | 615 | FFS | FFS | FFS | FFS | FFS | Germany |
| 8 | J-02YSH 2..10x2x0,6 ST II BD 3) | 1 000 [1] | 200 [1]) | 43 [2] | 750 | FFS | FFS | FFS | FFS | FFS | Germany |
| 9 | J-2Y(ST)CH 2x2x0,6 ST VI BD | 920 [1] | 180 [1] | 39 [2] | 690 | FFS | FFS | FFS | FFS | FFS | Germany |
| 10 | 278-4-6 3) (4 pairs; 0,6 mm) | 800 | 130 | 30 | 500 | 0,5 | 90 | 90 | FFS | FFS | France |
| 11 | L120 (4 pairs; 0,6 mm) | 1000 | 150 | 50 | 500 | 0,5 | 90 | 90 | FFS | FFS | France |
| 12 | Cat. 3: 0,4 mm; 4 pairs; 2 pairs | 350 | 150 | 50 | 200 | FFS | FFS | FFS | FFS | FFS | Japan, US [5] |
| 13 | Cat. 3: 0,5 mm; 4 pairs; 2 pairs | 550 | 150 | 50 | 350 | FFS | FFS | FFS | FFS | FFS | Japan, US [5] |
| 14 | Cat. 3: 0,65 mm, 4 pairs; 2 pairs | 750 | 150 | 50 | 550 | FFS | FFS | FFS | FFS | FFS | Japan, US [5] |

1) Worst case calculations.
2) Theoretical values.
3) This cable is not recommended in cases where the use of primary access is envisaged.
4) For further study (FFS).
5) the performance and distance capabilities of different cables may vary. Check with the manufacturer for specific information on distances supported for different configurations.

## *ANNEX A change to Bibliography*

***Add:*** ISO/IEC 11801:2002, 2nd edition: Information technology - Generic cabling for customer premises

***Replace*** *the entry for EN 60950 by:*

EN 60950-1, Information technology equipment – Safety – Part 1: General requirements

***Replace*** *the entry for ETS 300 012 by:*

EN 300 012-1, Integrated Services Digital Network (ISDN) – Basic User-Network Interface (UNI) – Part 1: Layer 1 specification

***Delete*** *entries* “ETS 300 047-1” to “ETS 300 047-5”.

***Replace*** "IEC 1000-4" *with* "61000-4" *and* "listing of amendments" *with* "all amendments".

***Delete*** *all years of publications with the exception of ISO/IEC 11801.*



Copyright International Organization for Standardization
Reproduced by IHS under license with ISO
No reproduction or networking permitted without license from IHS Not for Resale