INTERNATIONAL STANDARD

ISO/IEC 14496-4

Second edition
2004-12-15

AMENDMENT 13
2007-02-01

Information technology — Coding of audio-visual objects —

Part 4: Conformance testing

AMENDMENT 13: Parametric coding for high quality audio conformance

Technologies de l'information — Codage des objets audiovisuels —

Partie 4: Essai de conformité

AMENDEMENT 13: Codage paramétrique pour la conformité audio de haute qualité

Reference number
ISO/IEC 14496-4:2004/Amd.13:2007(E)

© ISO/IEC 2007

Copyright International Organization for Standardization
Provided by IHS under license with ISO
No reproduction or networking permitted without license from IHS

Not for Resale

PDF disclaimer

This PDF file may contain embedded typefaces. In accordance with Adobe's licensing policy, this file may be printed or viewed but shall not be edited unless the typefaces which are embedded are licensed to and installed on the computer performing the editing. In downloading this file, parties accept therein the responsibility of not infringing Adobe's licensing policy. The ISO Central Secretariat accepts no liability in this area.

Adobe is a trademark of Adobe Systems Incorporated.

Details of the software products used to create this PDF file can be found in the General Info relative to the file; the PDF-creation parameters were optimized for printing. Every care has been taken to ensure that the file is suitable for use by ISO member bodies. In the unlikely event that a problem relating to it is found, please inform the Central Secretariat at the address given below.

© ISO/IEC 2007

All rights reserved. Unless otherwise specified, no part of this publication may be reproduced or utilized in any form or by any means, electronic or mechanical, including photocopying and microfilm, without permission in writing from either ISO at the address below or ISO's member body in the country of the requester.

ISO copyright office
Case postale 56 • CH-1211 Geneva 20
Tel. + 41 22 749 01 11
Fax + 41 22 749 09 47
E-mail copyright@iso.org
Web www.iso.org

Published in Switzerland

Copyright International Organization for Standardization
Provided by IHS under license with ISO
No reproduction or networking permitted without license from IHS

© ISO/IEC 2007 – All rights reserved

Not for Resale

Foreword

ISO (the International Organization for Standardization) and IEC (the International Electrotechnical Commission) form the specialized system for worldwide standardization. National bodies that are members of ISO or IEC participate in the development of International Standards through technical committees established by the respective organization to deal with particular fields of technical activity. ISO and IEC technical committees collaborate in fields of mutual interest. Other international organizations, governmental and non-governmental, in liaison with ISO and IEC, also take part in the work. In the field of information technology, ISO and IEC have established a joint technical committee, ISO/IEC JTC 1.

International Standards are drafted in accordance with the rules given in the ISO/IEC Directives, Part 2.

The main task of the joint technical committee is to prepare International Standards. Draft International Standards adopted by the joint technical committee are circulated to national bodies for voting. Publication as an International Standard requires approval by at least 75 % of the national bodies casting a vote.

Attention is drawn to the possibility that some of the elements of this document may be the subject of patent rights. ISO and IEC shall not be held responsible for identifying any or all such patent rights.

Amendment 13 to ISO/IEC 14496-4:2004 was prepared by Joint Technical Committee ISO/IEC JTC 1, *Information technology*, Subcommittee SC 29, *Coding of audio, picture, multimedia and hypermedia information*.

© ISO/IEC 2007 – All rights reserved

Copyright International Organization for Standardization
Provided by IHS under license with ISO
No reproduction or networking permitted without license from IHS
Not for Resale

--`,,```,,,,````-`-`,,`,,`,`,,`---

Copyright International Organization for Standardization
Provided by IHS under license with ISO
No reproduction or networking permitted without license from IHS
Not for Resale

Information technology — Coding of audio-visual objects —

Part 4:
Conformance testing

AMENDMENT 13: Parametric coding for high quality audio conformance

In subclause 6.5.1 File name conventions, insert the following row into Table 29 after the row for PS (+SBR +AAC LC):

Table 29 — File name conventions

SSC	ssc_<tool>_<nchan>[_sig<sig>]	ssc_<mode>_<tool>_<nchan>[_sig<sig>][_<chan>]

In subclause 6.6.4.1.2.2.4 ics_info(), replace:

Test bitstreams al03 and as17 are provided respectively for Main and Low-Complexity profiles to test decoder performance on non-meaningful transitions (see subclause 6.6.4.1.2.2.1).

with:

Test sequences al03 and as17 are provided respectively for Low Complexity and Scalable Sampling Rate profiles to test decoder performance on non-meaningful transitions (see subclause 6.6.4.1.2.2.1).

In subclause 6.6.4.1.2.2.4 ics_info(), replace:

predictor_data_present: shall be encoded with the value 0 for the audioObjectTypes 2 (AAC LC), 3 (AAC SSR) and 17 (ER AAC LC); no restrictions apply otherwise.

with:

predictor_data_present: shall be encoded with the value 0 for the audioObjectTypes 2 (AAC LC), 3 (AAC SSR) and 17 (ER AAC LC); shall be encoded with the value 0 when used in the Low Delay AAC profile; no restrictions apply otherwise.

In subclause 6.6.4.1.2.2.15 (individual_channel_stream()), replace:

pulse_data_present: shall be encoded with a value of 0 for AAC scalable or if window_sequence is EIGHT_SHORT_SEQUENCE.

with:

pulse_data_present: shall be encoded with a value of 0 for the audioObjectTypes 6 (AAC scalable) and 20 (ER AAC scalable); shall be encoded with a value of 0 when used in the Low Delay AAC profile; shall be encoded with a value of 0 if window_sequence is EIGHT_SHORT_SEQUENCE; no restrictions apply otherwise.

© ISO/IEC 2007 – All rights reserved

Copyright International Organization for Standardization
Provided by IHS under license with ISO
No reproduction or networking permitted without license from IHS
Not for Resale

In subclause 6.6.4.2.3 (Test sequences), Table 30 (AAC test sequences) correct the arithmetic torture table entry for as13, samplingFrequencyIndex "0,1" from "yes" to "no".

In subclause 6.6.4.2.3 (Test sequences), add to table 41 (AAC Test sequences):

er_ad100np	sine sweep	64	23	*	1	0,1	0	-	0	0	0	-	-	-	y	n	n	n	n	RMS
er_ad103np	test mix	64	23	*	1	0,1	0	-	0	1	0	-	-	-	?	?	n	n	fs2	none
er_ad107np	test mix	64	23	*	1	0,1	0	-	0	1	1	-	-	-	?	?	n	n	fs1	none
er_ad110np	sine sweep	64	23	*	1	0,1	1	-	0	0	0	-	-	-	y	n	n	n	n	RMS
er_ad111np	test mix	64	23	*	1	0,1	1	-	0	0	0	-	-	-	?	?	n	n	fs1	none
er_ad115np	test mix	64	23	*	1	0,1	1	-	0	0	1	-	-	-	?	?	n	n	fs2	none
er_ad202np	test mix	128	23	*	2	0,1	0	-	1	0	0	y	y	-	?	?	n	n	fs2	none
er_ad206np	test mix	128	23	*	2	0,1	0	-	1	0	1	y	y	-	?	?	n	n	fs1	none
er_ad214np	test mix	128	23	*	2	0,1	1	-	1	1	0	y	y	-	?	?	n	n	fs2	none
er_ad218np	test mix	128	23	*	2	0,1	1	-	1	1	1	y	y	-	?	?	n	n	fs1	none

In subclause 6.6.6.1.2.2.2 (bsac_header()), replace the sentence:

header_length: ((header_length+8)*8) must be smaller than or equal to (frame_length*8)

with:

header_length: ((header_length+7)*8) must be smaller than or equal to (frame_length*8)

In subclause 6.6.6.2.3, replace Table 52 with:

Table 52 — ER BSAC Object Type Test Compressed data for Mobile Audio Internetworking Profile Level 1-3 and Natural Audio Profile Level 1-2

File base name	Content	Base Layer Bitrate (kbit/s)	Top Bitrate (kbit/s)	Top Layer (n)	Number of ES	ES Bitrate (kbit/s)	Number of channel	Intensity	MS	TNS	PNS	epConfig	SBA	Highest Layer	Test Procedure
er_bs01_ep0	sine sweep	16	40/64	24/48	1	40/64	1					0		24/48	RMS
er_bs01_ep1	sine sweep	16	40/64	24/48	6	BL1, BL2,6/12, 6/12, 6/12, 6/12	1					1		24/48	RMS

© ISO/IEC 2007 – All rights reserved
Copyright International Organization for Standardization
Provided by IHS under license with ISO
No reproduction or networking permitted without license from IHS
Not for Resale

er_bs02_ep0	music	16	40/64	24/48	25/49	BL,1, 1, ..., 1, 1	1					0		0, 1, 2, ... , 24/48	
er_bs02_ep1	music	16	40/64	24/48	6	BL1, BL2,6 /12, 6/12, 6/12, 6/12	1					1		0, 1, 2, ... , 24/48	
er_bs03_ep0	music	32	80/128	24/48	2	BL,24 /48	2					0		0, 24/48	
er_bs03_ep1	music	32	80/128	24/48	6	BL1, BL2, 12/24, 12/24, 12/24, 12/24	2					1		0, 24/48	
er_bs04_ep0	music	32	80/128	24/48	4	BL,24 (48), 12(24), 12(24)	2		Yes	Yes		0		0, 12/24, 18/36, 24/48	
er_bs04_ep1	music	32	80/128	24/48	6	BL1, BL2, 12/24, 12/24, 12/24, 12/24	2		Yes	Yes		1		0, 12/24, 18/36, 24/48	
er_bs05_ep0	music	32	80/128	24/48	5	BL,12/ 24, 12/24, 12/24, 12/24	2	Yes	Yes	Yes		0		0, 6/12, 12/24, 18/36, 24/48	
er_bs05_ep1	music	32	80/128	24/48	6	BL1, BL2, 12/24, 12/24, 12/24, 12/24	2	Yes	Yes	Yes		1		0, 6/12, 12/24, 18/36, 24/48	
er_bs06_ep0	music	32	80/128	24/48	3	BL, 24/48, 24/48	2	Yes	Yes	Yes		0	Yes	0, 12/24, 24/48	
er_bs06_ep1	music	32	80/128	24/48	6	BL1, BL2, 12/24, 12/24, 12/24, 12/24	2	Yes	Yes	Yes		1	Yes	0, 6/12, 12/24, 18/36, 24/48	

© ISO/IEC 2007 – All rights reserved

Copyright International Organization for Standardization
Provided by IHS under license with ISO
No reproduction or networking permitted without license from IHS
Not for Resale

er_bs07_ep0	noise	16	40/64	24/48	1	40/64	1				Yes	0		24/48	PNS-1
er_bs07_ep1	noise	16	40/64	24/48	6	BL1, BL2, 6/12, 6/12, 6/12, 6/12	1				Yes	1		24/48	PNS-1
er_bs08_ep0	noise	16	40/64	24/48	1	40/64	1				Yes	0		24/48	PNS-2/3
er_bs08_ep1	noise	16	40/64	24/48	6	BL1, BL2, 6/12, 6/12, 6/12, 6/12	1				Yes	1		24/48	PNS-2/3

After subclause 6.6.18 Parametric Stereo Conformance, add the following subclauses:

6.6.19 SSC (SinuSoidal Coding)

6.6.19.1 Compressed data

6.6.19.1.1 Characteristics

Conformant SSC compressed MPEG-4 data shall have the SSC data stored as outlined in ISO/IEC 14496-3 subpart 8 "Technical description of Parametric coding for high quality audio".

6.6.19.1.2 Test procedure

Each compressed data shall meet the syntactic and semantic requirements specified in ISO/IEC 14496-3. The decoded data shall also meet the requirements defined in ISO/IEC 14496-3. If a syntactic element is not listed below, no restrictions apply to that element. The **reserved** element shall be encoded with the value zero.

6.6.19.1.2.1 Compressed MPEG-4 data payload

AudioSpecificConfig

audioObjectType: Shall be encoded with the value 28.

samplingFrequencyIndex: Shall be encoded with the value 4.

channelConfiguration: Shall be encoded with a value in the range of [1 2].

SSCSpecificConfig

decoder_level: Shall be encoded with the value 1. The values 0, 2, 3 are reserved.

--`,,```,,,,````-`-`,,`,,`,`,,`---
Copyright International Organization for Standardization
Provided by IHS under license with ISO
No reproduction or networking permitted without license from IHS
© ISO/IEC 2007 – All rights reserved
Not for Resale

update_rate: Shall be encoded with the value 4. The values in the ranges [0 3] and [5 7] are reserved.

synthesis_method: Shall be encoded with the value 0. The values 1, 2, 3 are reserved.

mode_ext: Shall be encoded with the value 0 or 1. The values 2, 3 are reserved.

ssc_audio_frame_header

s_nrof_continuations: Shall be encoded with a value not exceeding max_nrof_sinusoids[decoder_level].

s_nrof_den: Shall be encoded with a value not exceeding max_nrof_den[decoder_level].

subframe_transients(sf,ch)

t_loc[sf][ch]: Shall be encoded with a value in the range of [0 S[Update_rate]-1].

t_type[sf][ch]: Shall be encoded with a value in the range of [0 1]. The values 2, 3 are reserved.

t_b_par[sf][ch]: Shall be encoded with a value in the range of [0 3]. The values in the range of [4 7] are reserved.

t_chi_par[sf][ch]: Shall be encoded with a value in the range of [0 3]. The values in the range of [4 7] are reserved.

t_freq[sf][ch][l]: Shall be encoded with a value in the range of [0 485]. The values in the range of [486 511] are reserved.

subframe_sinusoids(sf,ch)

bs_codeword: Shall be encoded with the values listed in the corresponding Huffman tables, defined in ISO/IEC 14496-3, Tables 8.B.1 till 8.B.11, 8.B.15 and 8.B.16.

s_nrof_births[sf][ch]: Shall be encoded with a value not exceeding max_nrof_sinusoids[decoder_level] - s_nrof_confinuations[sf][ch].

subframe_noise(sf,ch)

n_laguerre[ch]: Shall be encoded with a value in the range of [0 2]. The value 3 is reserved.

bs_codeword: Shall be encoded with the values listed in the corresponding Huffman tables, defined in ISO/IEC 14496-3, Tables 8.B.12 till 8.B.14.

ps_data()

iid_mode: Shall be encoded with a value in the range of [0 5]. The values 6, 7 are reserved.

icc_mode: Shall be encoded with a value in the range of [0 5]. The values 6, 7 are reserved.

© ISO/IEC 2007 – All rights reserved

Copyright International Organization for Standardization
Provided by IHS under license with ISO
No reproduction or networking permitted without license from IHS
Not for Resale

border_position[e]: Shall be encoded with a value in the range of [(border_position[e-1]+1) (*numQMFSlots*-1)] if e>0 or a value in the range of [0 (*numQMFSlots*-1)] if e==0.

iid_dt[]: Shall be encoded with the value 0 if iid_mode of the current envelope is different from iid_mode of the previous envelope.

icc_dt[]: Shall be encoded with the value 0 if icc_mode of the current envelope is different from icc_mode of the previous envelope.

ps_extension_id: Shall be encoded with the value of 0. The values 1, 2 and 3 are reserved.

ps_extension()

ipd_dt[]: Shall be encoded with the value 0 if iid_mode of the current envelope is different from iid_mode of the previous envelope.

opd_dt[]: Shall be encoded with the value 0 if iid_mode of the current envelope is different from iid_mode of the previous envelope.

reserved_ps: Shall be encoded with the value of 0. The value 1 is reserved.

iid_data()

bs_codeword: Shall be encoded with the values listed in the corresponding Huffman table, defined in ISO/IEC 14496-3, Table 8.B.17 or Table 8.B.18.

Conformant compressed MPEG-4 data shall have coded iid_par[e][b] IID indices that are in the range [-7 7] if iid_quant==0 or in the range [-15 15] if iid_quant==1.

icc_data()

bs_codeword: Shall be encoded with the values listed in the corresponding Huffman table, defined in ISO/IEC 14496-3, Table 8.B.19.

Conformant compressed MPEG-4 data shall have coded icc_par[e][b] ICC indices that are in the range [0 7].

ipd_data()

bs_codeword: Shall be encoded with the values listed in the corresponding Huffman table, defined in ISO/IEC 14496-3, Table 8.B.20.

opd_data()

bs_codeword: Shall be encoded with the values listed in the corresponding Huffman table, defined in ISO/IEC 14496-3, Table 8.B.21.

--`,,```,,,,````-`-`,,`,,`,`,,`---
Copyright International Organization for Standardization
Provided by IHS under license with ISO
No reproduction or networking permitted without license from IHS
© ISO/IEC 2007 – All rights reserved
Not for Resale

6.6.19.2 Decoders

6.6.19.2.1 Characteristics

The object type SSC has the Object Type ID 28, and the compressed MPEG-4 data syntax is defined in ISO/IEC 14496-3. The Audio Object Type SSC contains the SSC and PS tools.

6.6.19.2.2 SSC profile

A conformant SSC profile decoder of Level 2 or higher, shall support the baseline version of the PS tool, as outlined in ISO/IEC 14496-3.

A conformant SSC profile decoder of Level 3 or higher, shall support IPD/OPD synthesis and 34 frequency bands resolution, as outlined in ISO/IEC 14496-3.

A conformant SSC Profile decoder of a certain level shall always be able to operate the SSC tool for streams containing Parametric Stereo data. For streams not containing Parametric Stereo data, the SSC Profile decoder shall operate the SSC tool.

The specifications given in the level definitions must be met. The output signal of the decoder under test must meet the criteria for accuracy of deterministic signal components and statistical properties of stochastic signal components as described below. Two alternative accuracy classes for SSC decoders are defined:

- Full Accuracy SSC decoder
- Fixed Point Accuracy SSC decoder

The criteria for deterministic signal components depend on the accuracy class selected. The criteria for stochastic signal components are the same for both accuracy classes.

6.6.19.2.3 SSC conformance test procedure

Test compressed data and reference decoder output signals are provided to apply the different conformance criteria using the procedures described in the following sub clauses. Software implementing the different test procedures will be made available.

The SSC object type is used only in the SSC Profile. Since Level 2 includes Level 1, a Level 2 conforming decoder must also meet the criteria for Level 1. A Level 3 conforming decoder must also meet the criteria for Level 1.

The conformance of the SSC decoder tools can be checked with compressed data for the SSC object type.

To be called a conforming SSC decoder, the required conformance criteria must be met for all test compressed data listed in subclause 6.6.19.2.4, that are applicable at the selected Profile and Level. The conformance criteria for deterministic signal components depend on the selected accuracy class.

6.6.19.2.3.1 Conformance criterion for deterministic components of Full Accuracy SSC decoders

A Full Accuracy SSC decoder at an accuracy level of “K bit” has to fulfil the RMS/LSB criterion as defined in sub clause 5.6.1.2.2.1.

6.6.19.2.3.2 Conformance criteria for deterministic components of Fixed-Point Accuracy SSC decoders

The conformance criteria for Fixed-Point Accuracy decoders are based on measuring the segmental SNR and the LPC Cepstral Distortion (CD) between the reference decoder output and the output of the decoder to be tested. The segment length to be used in the calculation of the SNR is equal to the audio frame length (i.e.

© ISO/IEC 2007 – All rights reserved

Copyright International Organization for Standardization
Provided by IHS under license with ISO
No reproduction or networking permitted without license from IHS
Not for Resale

8*384=3072 samples). The SNR and the CD have to be calculated only for those segments for which the power of the reference waveform is in the range [-50...-5] dB. CD is defined as

$$\mathrm{CD} = \frac{10}{\ln(10)} \cdot \sqrt{2\mathrm{D}} \ .$$

D is the accumulated distortion of the LPC cepstrum C_{ref} of the reference waveform and C_{test} of the output of the decoder under test. D is defined as

$$\mathrm{D} = \sum_{i=1}^{\mathrm{N}} \left(\mathrm{C}_{\mathrm{ref}}[i] - \mathrm{C}_{\mathrm{test}}[i]\right)^2 \ .$$

N is the LPC cepstrum order which equals 32. The LPC cepstrum C[i] is defined by means of the algorithm `lpc2cepstrum` based on the LPC coefficients of a 16th order linear prediction filter. The computation of the LPC filter coefficients lpc_coef [j] is defined by the algorithm `calculate_lpc` (as defined in ISO/IEC 14496-4).

For a Fixed-Point Accuracy SSC decoder, the average value of the segmental SNR shall exceed 30 dB. At the same time, the average value of the CD shall not exceed 1 dB.

6.6.19.2.3.3 Conformance criteria for noise generators and spectral noise envelopes of SSC decoders

The applied noise generator must not show a periodicity of less than one second. The average spectral envelope of a stationary noise component must meet a Cepstral Distance criterion when compared to the reference spectral envelope.

To perform this test, the noise signal is re-whitened by a prediction filter, which is inverse to the filter used in the noise synthesis of the decoder. The required filter parameters are given in the parameter file accompanying a test compressed data. The autocorrelation function (ACF) of the re-whitened noise is calculated over a sufficiently long noise signal (e.g. 20 seconds, i.e. 288 frames) and normalized by dividing all values by the zero-th value of the ACF. The absolute values of this normalized ACF must not exceed a limit of e.g. 0.1 in the range of e.g. 1...15999.

In addition, the average power of the analyzed segment must be in the range of e.g. +/- 0.5 dB relative to the given reference power.

Test stream ssc_n1 must be used to perform the noise generator and spectral noise envelope test. This test stream only contains noise tool related information. The HILN conformance tool *hilnconf* shall be applied in the following way:

hilnconf ssc_n1.ctp test.wav 2

Where 'test.wav' is the decoded output of the decoder under test for test stream ssc_n1.

6.6.19.2.3.4 Conformance criteria for temporal noise envelopes of SSC decoders

The average of multiple instances of the same temporal envelope must closely enough resemble the reference temporal envelope.

To perform this test, the signal is cut into segments with a length of 2 frames. For every sample position in this set of segments, the squares of the sample values of all segments are accumulated and afterwards divided by the number of segments to calculate the average power for each sample position. The square roots of the resulting values must not differ from the reference temporal amplitude envelope by more than e.g. +/-20% of the nominal noise amplitude.

© ISO/IEC 2007 – All rights reserved
Copyright International Organization for Standardization
Provided by IHS under license with ISO
No reproduction or networking permitted without license from IHS
Not for Resale

Test stream ssc_n2 must be used to perform the temporal noise envelope test. This test stream only contains noise tool related information.

6.6.19.2.3.5 Conformance criteria for tempo and pitch scaling of SSC decoders

Test streams ssc_s2, ssc_n1, ssc_n2 and ssc_ps6 may be used to perform the tempo and pitch scaling test. For these four test streams reference decoded output signals are provided for a subframe size of 360 samples and a pitch scaling factor of 0.9. For test stream ssc_s2 the deterministic components tests apply. For the test streams ssc_n1 and ssc_n2, the spectral and temporal noise envelope tests apply, respectively. For test stream ssc_n1 a corresponding ssc_n1_scaling_360_0.9.ctp test parameter file is provided and can be used as described in Section 6.6.19.2.3.3.

6.6.19.2.3.6 Conformance criteria for Parametric Stereo decoding of SSC decoders

For the test streams containing Parametric Stereo data also accompanying test streams containing only the mono parameters are provided. Furthermore a modified version of the reference decoder is prepared that is able to replace the SSC mono signal by a signal read from a file before processing the Parametric Stereo data.

To perform this test, the decoder output for the accompanying test stream is provided as the external input to the modified reference decoder. The output of the modified reference decoder is compared with the output of the decoder under test according to the conformance criteria for deterministic components.

This is illustrated in Figure AMD13.1.

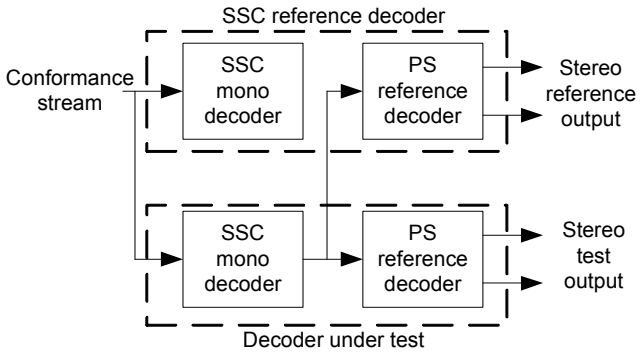

Figure AMD13.1 — Parametric stereo conformance setup.

© ISO/IEC 2007 – All rights reserved
Copyright International Organization for Standardization
Provided by IHS under license with ISO
No reproduction or networking permitted without license from IHS
Not for Resale

Proposed test sequences

Table AMD13-1 — SSC test sequences

file base name	content	bitrate (kbit/s)	channel Configuration	mode_ext	Refresh frames test	phase_jitter	Transient type test	Frequency granularity test	Amplitude granularity test	Laguerre filtering	n_overlap_lsf	Iid_mode	Iic_mode	Ipdopd	PS configuration switching	Transients	Sinusoids	Noise	Parametric stereo coding	Conformance criteria
ssc_t1	test signal	12	1	-	-	-	0	-	-	-	-	-	-	-	-	y	y	-	-	Deterministic
ssc_t2	test signal	6	1	-	-	-	1	-	-	-	-	-	-	-	-	y	-	-	-	Deterministic
ssc_s1	test signal	18	1	-	-	-	-	-	-	-	-	-	-	-	-	-	y	-	-	Deterministic
ssc_s2	test signal	3	1	-	y	y	-	y	y	-	-	-	-	-	-	-	y	-	-	Deterministic
ssc_s3	test signal	30	2	0	-	-	-	-	-	-	-	-	-	-	-	-	y	-	-	Deterministic
ssc_n1	test signal	4	1	-	-	-	-	-	-	y	y	-	-	-	-	-	-	y	-	Spectral noise envelope
ssc_n2	test signal	5	1	-	-	-	-	-	-	-	y	-	-	-	-	-	-	y	-	Temporal noise envelope
ssc_n3	test signal	5	1	-	y	-	-	-	-	y	y	-	-	-	-	-	-	y	-	subjective
ssc_n4	test signal	42	2	0	-	-	-	-	-	-	-	-	-	-	-	y	y	y	-	subjective
ssc_ps1	music	24	2	1	-	-	-	-	-	-	-	0	-	-	-	y	y	y	y	Deterministic
ssc_ps2	music	24	2	1	-	-	-	-	-	-	-	5	-	-	-	y	y	y	y	Deterministic
ssc_ps3	music	24	2	1	-	-	-	-	-	-	-	-	1	-	-	y	y	y	y	Deterministic
ssc_ps4	music	24	2	1	-	-	-	-	-	-	-	-	5	-	-	y	y	y	y	Deterministic
ssc_ps5	music	24	2	1	-	-	-	-	-	-	-	4	4	-	-	y	y	y	y	Deterministic
ssc_ps6	music	24	2	1	-	-	-	-	-	-	-	2	2	y	-	y	y	y	y	Deterministic
ssc_ps7	music	24	2	1	-	-	-	-	-	-	-	y	y	y	y	y	y	y	y	Deterministic

© ISO/IEC 2007 – All rights reserved
Copyright International Organization for Standardization
Provided by IHS under license with ISO
No reproduction or networking permitted without license from IHS
Not for Resale

In subclause 6.7.2.2 (Test procedure), replace Table 94 (EP tool test sequences) with:

| header_crclen | | |

| | | |

| | | |

In subclause 6.12.1 Conformance test sequence assignment to profiles and levels, add the following rows and columns to Table 104:

Additions to Table 104

Object type	sequence name	SSC Profile				
	Level	**1**	**2**	**3**	**4**	**5**
SSC	ssc_t1					
	ssc_t2					
	ssc_s1					
	ssc_s2					
	ssc_s3					
	ssc_n1					
	ssc_n2					
	ssc_n4					
	ssc_ps1					
	ssc_ps2					
	ssc_ps6					
	ssc_ps7					

In subclause 6.12.1 (Audio), replace:

Table 104

Object type	sequence name	Main Audio Profile				Scalable Audio Profile				Speech Profile		Synthetic Audio Profile			High Quality Audio Profile								Low Delay Audio Profile								Natural Audio Profile				Mobile Audio Internetworking Profile					
	Level	**1**	**2**	**3**	**4**	**1**	**2**	**3**	**4**	**1**	**2**	**1**	**2**	**3**	**1**	**2**	**3**	**4**	**5**	**6**	**7**	**8**	**1**	**2**	**3**	**4**	**5**	**6**	**7**	**8**	**1**	**2**	**3**	**4**	**1**	**2**	**3**	**4**	**5**	**6**
AAC LC	al00	X	X	X	X	≥6	≥6	≥3	≥3						≥7	≥3	≥3	≥3	≥7	≥3	≥3	≥3									≥3	X	≥3	X						
	al01	X	X	X	X	≥6	≥6	≥3	≥3						≥7	≥3	≥3	≥3	≥7	≥3	≥3	≥3									≥3	X	≥3	X						
	al02	X	X	X	X	≥6	≥6	≥3	≥3						≥7	≥3	≥3	≥3	≥7	≥3	≥3	≥3									≥3	X	≥3	X						
	al03	X	X	X	X	≥6	≥6	≥3	≥3						≥7	≥3	≥3	≥3	≥7	≥3	≥3	≥3									≥3	X	≥3	X						
	al04	X	X	X	X	≥6	≥6	≥3	≥3						≥7	≥3	≥3	≥3	≥7	≥3	≥3	≥3									≥3	X	≥3	X						
	al05	X	X	X	X		≥6	≥3	≥3						≥7	≥3	≥3	≥3	≥7	≥3	≥3	≥3									≥3	X	≥3	X						
	al06	X	X	X	X				≥3								≥3	≥3			≥3	≥3									≥3	X	≥3	X						
	al07	X	X	X	X				≥3																					≥3	X	≥3	X						
	al08			≥3	X																										≥4		≥4						
	al14	X	X	X	X		≥6	≥3	≥3						≥7	≥3	≥3	≥3	≥7	≥3	≥3	≥3									≥3	X	≥3	X						
	al15		X	X	X				≥3									≥3				≥3									≥4	X	≥4	X						
	al16	X	X	X	X				≥3								≥3	≥3			≥3	≥3									≥3	X	≥3	X						
	al17	X	X	X	X		≥6	≥3	≥3						≥7	≥3	≥3	≥3	≥7	≥3	≥3	≥3									≥3	X	≥3	X						
	al18	X	X	X	X	≥6	≥6	≥3	≥3						≥7	≥3	≥3	≥3	≥7	≥3	≥3	≥3									≥3	X	≥3	X						
	al19	X	X	X	X	≥6	≥6	≥3	≥3						≥7	≥3	≥3	≥3	≥7	≥3	≥3	≥3									≥3	X	≥3	X						
AAC main	am00	X	X	X	X																										≥3	X	≥3	X						
	am01	X	X	X	X																										≥3	X	≥3	X						
	am02	X	X	X	X																										≥3	X	≥3	X						
	am03		≥1	X	X																										≥7	X	≥7	X						
	am04	X	X	X	X																										≥3	X	≥3	X						

--`,,```,,,,````-`-`,,`,,`,`,,`---

© ISO/IEC 2007 – All rights reserved
Copyright International Organization for Standardization
Provided by IHS under license with ISO
No reproduction or networking permitted without license from IHS
Not for Resale

	am05		X	X	X																									≥6	X	≥6	X									
	am06	X	X	X	X																									≥3	X	≥3	X									
	am07		X	X	X																									≥5	X	≥5	X									
AAC SSR	as00	X	X	X	X																									≥3	X	≥3	X									
	as01	X	X	X	X																									≥3	X	≥3	X									
	as02	X	X	X	X																									≥3	X	≥3	X									
	as03	X	X	X	X																									≥3	X	≥3	X									
	as04	X	X	X	X																									≥3	X	≥3	X									
	as05	X	X	X	X																									≥3	X	≥3	X									
	as06	X	X	X	X																									≥3	X	≥3	X									
	as07	X	X	X	X																									≥3	X	≥3	X									
	as08	X	X	X	X																									≥3	X	≥3	X									
	as09	X	X	X	X																									≥3	X	≥3	X									
	as10	X	X	X	X																									≥3	X	≥3	X									
	as11	X	X	X	X																									≥3	X	≥3	X									
	as12	X	X	X	X																									≥3	X	≥3	X									
	as13	≥2	X	X	X																									≥5	X	≥5	X									
	as14	≥2	X	X	X																									≥5	X	≥5	X									
	as15	≥3	X	X	X																									≥6	X	≥6	X									
	as16	≥3	X	X	X																									≥6	X	≥6	X									
	as17	X	X	X	X																									≥3	X	≥3	X									
AAC LTP	ap01	X	X	X	X			X	X					X	X	X		X	X	X										X	X	X	X									
	ap02	X	X	X	X			X	X					X	X	X		X	X	X										X	X	X	X									
	ap03	X	X	X	X			X	X					X	X	X		X	X	X										X	X	X	X									
	ap04	X	X	X	X			X	X					X	X	X		X	X	X										X	X	X	X									
	ap05	X	X	X	X			X	X					X	X	X		X	X	X										X	X	X	X									
AAC scalable	ac01	X	X	X	X			X	X					X	X	X		X	X	X										X	X	X	X									
	ac02	X	X	X	X			X	X					X	X	X		X	X	X										X	X	X	X									
	ac03	X	X	X	X			X	X					X	X	X		X	X	X										X	X	X	X									
	ac04 Layer 0	X	X	X	X	X	X	X	X				X	X	X	X	X	X	X	X										X	X	X	X									
	ac04 Layer 1 – 7	X	X	X	X			X	X					X	X	X		X	X	X										X	X	X	X									
	ac05 Layer 0	X	X	X	X	X	X	X	X				X	X	X	X	X	X	X	X										X	X	X	X									
	ac05 Layer 1 – 7	X	X	X	X			X	X					X	X	X		X	X	X										X	X	X	X									
	ac06 Layer 0	X	X	X	X	X	X	X	X				X	X	X	X	X	X	X	X										X	X	X	X									
	ac06 Layer 1 – 4	X	X	X	X		X	X	X				X	X	X	X	X	X	X	X										X	X	X	X									
	ac08	X	X	X	X			X	X					X	X	X		X	X	X										X	X	X	X									
	ac09	X	X	X	X			X	X					X	X	X		X	X	X										X	X	X	X									
	ac10 Layer 0	X	X	X	X	X	X	X	X				X	X	X	X	X	X	X	X										X	X	X	X									
	ac10 Layer 1 – 4	X	X	X	X		X	X	X				X	X	X	X	X	X	X	X										X	X	X	X									
	ac12	X	X	X	X	X	X	X	X				X	X	X	X	X	X	X	X										X	X	X	X									
	ac13 Layer 0	X	X	X	X	X	X	X	X				X	X	X	X	X	X	X	X										X	X	X	X									
	ac13 Layer 1	X	X	X	X	X	X	X	X					X	X	X		X	X	X										X	X	X	X									
	ac14 Layer 0	X	X	X	X	X	X	X	X				X	X	X	X	X	X	X	X										X	X	X	X									
	ac14 Layer 1 – 2	X	X	X	X			X	X					X	X	X		X	X	X										X	X	X	X									
	ac15 Layer 0	X	X	X	X	X	X	X	X				X	X	X	X	X	X	X	X										X	X	X	X									
	ac15 Layer 1 – 2	X	X	X	X																										X	X	X									
	ac16 Layer 0 – 1	X	X	X	X	X	X	X	X				X	X	X	X														X	X	X	X									
	ac16 Layer 2	X	X	X	X		X	X	X				X	X	X	X														X	X	X	X									
	ac17 Layer 0 – 1	X	X	X	X	X	X	X	X					X	X	X														X	X	X	X									
	ac17 Layer 2	X	X	X	X		X	X	X					X	X	X														X	X	X	X									
	ac18	X	X	X	X			X	X					X	X	X														X	X	X	X									
	ac19	X	X	X	X																									X	X	X	X									
	ac20	X	X	X	X			X	X					X	X	X														X	X	X	X									
	ac22	X	X	X	X			X	X					X	X	X														X	X	X	X									
Twin VQ	tv00	X	X	X	X	X	x	x	X																					X	X	X	X									
	tv01	X	X	X	X	X	x	x	X																					X	X	X	X									
	tv02	X	X	X	X	X	x	x	X																					X	X	X	X									
	tv03	X	X	X	X	X	x	x	X																					X	X	X	X									
	tv04	X	X	X	X	X	x	x	X																					X	X	X	X									
	tv05	X	X	X	X	X	x	x	X																					X	X	X	X									
	tv06	X	X	X	X	X	x	x	X																					X	X	X	X									
	tv07	X	X	X	X	X	x	x	X																					X	X	X	X									
	tv11	X	X	X	X		X	x	X																					X	X	X	X									
	tv14	X	X	X	X	X	x	x	X																					X	X	X	X									
	tv15	X	X	X	X			X	X																					X	X	X	X									
	tv16	X	X	X	X		X	x	X																					X	X	X	X									
	tv20	X	X	X	X	X	x	x	X																					X	X	X	X									
	tv21	X	X	X	X		X	x	X																					X	X	X	X									

© ISO/IEC 2007 – All rights reserved
Copyright International Organization for Standardization
Provided by IHS under license with ISO
No reproduction or networking permitted without license from IHS
Not for Resale

	tv22	X	X	X	X			X	X																				X	X	X	X								
	tv23	X	X	X	X	X	x	x	X																				X	X	X	X								
	tv24	X	X	X	X	X	x	x	X																				X	X	X	X								
	tv25	X	X	X	X		X	x	X																				X	X	X	X								
	tv26	X	X	X	X			X	X																				X	X	X	X								
	tv27	X	X	X	X	X	x	x	X																				X	X	X	X								
CELP	ce00	X	X	X	X	X	X	X	X	X	X				X	X	X	X	X	X	X	X	X	X	X	X	X	X	X	X	X	X								
	ce01	X	X	X	X	X	X	X	X	X	X				X	X	X	X	X	X	X	X		X	X	X		X	X	X	X	X								
	ce02	X	X	X	X	X	X	X	X	X	X				X	X	X	X	X	X	X	X	X	X	X	X	X	X	X	X	X	X								
	ce03	X	X	X	X	X	X	X	X	X	X				X	X	X	X	X	X	X	X		X	X	X		X	X	X	X	X								
	ce04	X	X	X	X	X	X	X	X	X	X				X	X	X	X	X	X	X	X	X	X	X	X	X	X	X	X	X	X								
	ce05	X	X	X	X	X	X	X	X	X	X				X	X	X	X	X	X	X	X		X	X	X		X	X	X	X	X								
	ce06	X	X	X	X	X	X	X	X	X	X				X	X	X	X	X	X	X	X		X	X	X		X	X	X	X	X								
	ce07	X	X	X	X	X	X	X	X	X	X				X	X	X	X	X	X	X	X		X	X	X		X	X	X	X	X								
	ce08	X	X	X	X	X	X	X	X	X	X				X	X	X	X	X	X	X	X		X	X	X		X	X	X	X	X								
	ce09	X	X	X	X	X	X	X	X	X	X				X	X	X	X	X	X	X	X		X	X	X		X	X	X	X	X								
	ce10	X	X	X	X	X	X	X	X	X	X				X	X	X	X	X	X	X	X		X	X	X		X	X	X	X	X								
	ce11	X	X	X	X	X	X	X	X	X	X				X	X	X	X	X	X	X	X		X	X	X		X	X	X	X	X								
	ce12	X	X	X	X	X	X	X	X	X	X				X	X	X	X	X	X	X	X		X	X	X		X	X	X	X	X								
	ce13	X	X	X	X	X	X	X	X	X	X				X	X	X	X	X	X	X	X		X	X	X		X	X	X	X	X								
	ce14	X	X	X	X	X	X	X	X	X	X				X	X	X	X	X	X	X	X		X	X	X		X	X	X	X	X								
HVXC	hv01	X	X	X	X	X	X	X	X	X	X												X	X	X	X	X	X	X	X	X	X								
	hv02	X	X	X	X	X	X	X	X	X	X												X	X	X	X	X	X	X	X	X	X								
	hv03	X	X	X	X	X	X	X	X	X	X												X	X	X	X	X	X	X	X	X	X								
	hv04	X	X	X	X	X	X	X	X	X	X												X	X	X	X	X	X	X	X	X	X								
	hv05	X	X	X	X	X	X	X	X	X	X												X	X	X	X	X	X	X	X	X	X								
	hv06	X	X	X	X	X	X	X	X	X	X												X	X	X	X	X	X	X	X	X	X								
	hv07	X	X	X	X	X	X	X	X	X	X												X	X	X	X	X	X	X	X	X	X								
	hv08	X	X	X	X	X	X	X	X	X	X												X	X	X	X	X	X	X	X	X	X								
TTSI	tts1	X	X	X	X	X	X	X	X	X	X	X	X	X									X	X	X	X	X	X	X	X	X	X								
	tts2	X	X	X	X	X	X	X	X	X	X	X	X	X									X	X	X	X	X	X	X	X	X	X								
	tts3	X	X	X	X	X	X	X	X	X	X	X	X	X									X	X	X	X	X	X	X	X	X	X								
	tts4	X	X	X	X	X	X	X	X	X	X	X	X	X									X	X	X	X	X	X	X	X	X	X								
	tts5	X	X	X	X	X	X	X	X	X	X	X	X	X									X	X	X	X	X	X	X	X	X	X								
	tts6	X	X	X	X	X	X	X	X	X	X	X	X	X									X	X	X	X	X	X	X	X	X	X								
	tts7	X	X	X	X	X	X	X	X	X	X	X	X	X									X	X	X	X	X	X	X	X	X	X								
	tts8	X	X	X	X	X	X	X	X	X	X	X	X	X									X	X	X	X	X	X	X	X	X	X								
Algorithmic Synthesis	sy001	X	X	X	X							X	X	X																										
	sy002	X	X	X	X							X	X	X																										
	sy003	X	X	X	X							X	X	X																										
	sy004	X	X	X	X							X	X	X																										
	sy005			X	X								X	X																										
	sy006				X									X																										
	sy007	X	X	X	X							X	X	X																										
	sy008			X	X								X	X																										
	sy009				X									X																										
	sy010	X	X	X	X							X	X	X																										
	sy011	X	X	X	X							X	X	X																										
	sy012	X	X	X	X							X	X	X																										
	sy013	X	X	X	X							X	X	X																										
ER AAC LC	er_al10_ep0														≥7	≥3	≥3	≥3	≥7	≥3	≥3	≥3								≥3	X	≥3	X								
	er_al10_ep1														≥7	≥3	≥3	≥3	≥7	≥3	≥3	≥3								≥3	X	≥3	X								
	er_al10_ep3_crc01_08														X	X	X	X	X	X	X	X								X	X	X	X								
	er_al10_ep3_crc01_22														X	X	X	X	X	X	X	X								X	X	X	X								
	er_al12_ep0														≥7	≥3	≥3	≥3	≥7	≥3	≥3	≥3								≥3	X	≥3	X								
	er_al12_ep1														≥7	≥3	≥3	≥3	≥7	≥3	≥3	≥3								≥3	X	≥3	X								
	er_al15_ep0														≥7	≥3	≥3	≥3	≥7	≥3	≥3	≥3								≥3	X	≥3	X								
	er_al15_ep1														≥7	≥3	≥3	≥3	≥7	≥3	≥3	≥3								≥3	X	≥3	X								
	er_al15_ep3_srcpc01_08																		X	X	X	X										X	X								
	er_al15_ep3_srcpc01_48																			X	X	X										X	X								
	er_al18_ep0														≥7	≥3	≥3	≥3	≥7	≥3	≥3	≥3								≥3	X	≥3	X								
	er_al18_ep1														≥7	≥3	≥3	≥3	≥7	≥3	≥3	≥3								≥3	X	≥3	X								
	er_al18_ep3_crc02_11														X	X	X	X	X	X	X	X								X	X	X	X								
	er_al18_ep3_crc02_24															X	X	X		X	X	X								X	X	X	X								
	er_al18_ep3_srcpc02_11																		X	X	X	X										X	X								
	er_al18_ep3_srcpc02_64																																X								

--`,,```,,,,````-`-`,,`,,`,`,,`---

Copyright International Organization for Standardization
Provided by IHS under license with ISO
No reproduction or networking permitted without license from IHS

© ISO/IEC 2007 – All rights reserved

Not for Resale

| | | |

| | | |

| | | |

| | | |

	al08			≥3	X								
	al14	X	X	X	X		≥6	≥3	≥3				
	al15		X	X	X				≥3				
	al16	X	X	X	X				≥3				
	al17	X	X	X	X		≥6	≥3	≥3				
	al18	X	X	X	X	≥6	≥6	≥3	≥3				
	al19	X	X	X	X	≥6	≥6	≥3	≥3				
AAC main	am00	X	X	X	X								
	am01	X	X	X	X								
	am02	X	X	X	X								
	am03		≥1	X	X								
	am04	X	X	X	X								
	am05		X	X	X								
	am06	X	X	X	X								
	am07		X	X	X								
AAC SSR	as00	X	X	X	X								
	as01	X	X	X	X								
	as02	X	X	X	X								
	as03	X	X	X	X								
	as04	X	X	X	X								
	as05	X	X	X	X								
	as06	X	X	X	X								
	as07	X	X	X	X								
	as08	X	X	X	X								
	as09	X	X	X	X								
	as10	X	X	X	X								
	as11	X	X	X	X								
	as12	X	X	X	X								
	as13	≥2	X	X	X								
	as14	≥2	X	X	X								
	as15	≥3	X	X	X								
	as16	≥3	X	X	X								
	as17	X	X	X	X								
AAC LTP	ap01	X	X	X	X			X	X				
	ap02	X	X	X	X			X	X				
	ap03	X	X	X	X			X	X				
	ap04	X	X	X	X			X	X				
	ap05	X	X	X	X			X	X				
AAC scalable	ac01	X	X	X	X			X	X				
	ac02	X	X	X	X			X	X				
	ac03	X	X	X	X			X	X				
	ac04 Layer 0	X	X	X	X	X	X	X	X				
	ac04 Layer 1 – 7	X	X	X	X			X	X				
	ac05 Layer 0	X	X	X	X	X	X	X	X				
	ac05 Layer 1 – 7	X	X	X	X			X	X				
	ac06 Layer 0	X	X	X	X	X	X	X	X				
	ac06 Layer 1 – 4	X	X	X	X		X	X	X				
	ac08	X	X	X	X			X	X				
	ac09	X	X	X	X			X	X				
	ac10 Layer 0	X	X	X	X	X	X	X	X				
	ac10 Layer 1 – 4	X	X	X	X		X	X	X				
	ac12	X	X	X	X	X	X	X	X				
	ac13 Layer 0	X	X	X	X	X	X	X	X				
	ac13 Layer 1	X	X	X	X	X	X	X	X				
	ac14 Layer 0	X	X	X	X	X	X	X	X				
	ac14 Layer 1 – 2	X	X	X	X			X	X				
	ac15 Layer 0	X	X	X	X	X	X	X	X				
	ac15 Layer 1 – 2	X	X	X	X								
	ac16 Layer 0 – 1	X	X	X	X	X	X	X	X				
	ac16 Layer 2	X	X	X	X		X	X	X				
	ac17 Layer 0 – 1	X	X	X	X	X	X	X	X				
	ac17 Layer 2	X	X	X	X		X	X	X				
	ac18	X	X	X	X			X	X				
	ac19	X	X	X	X								
	ac20	X	X	X	X			X	X				
	ac22	X	X	X	X			X	X				
Twin VQ	tv00	X	X	X	X	X	x	x	X				
	tv01	X	X	X	X	X	x	x	X				
	tv02	X	X	X	X	X	x	x	X				

© ISO/IEC 2007 – All rights reserved

Copyright International Organization for Standardization
Provided by IHS under license with ISO
No reproduction or networking permitted without license from IHS
Not for Resale

	tv03	X	X	X	X	X	x	x	X					
	tv04	X	X	X	X	X	x	x	X					
	tv05	X	X	X	X	X	x	x	X					
	tv06	X	X	X	X	X	x	x	X					
	tv07	X	X	X	X	X	x	x	X					
	tv11	X	X	X	X		X	x	X					
	tv14	X	X	X	X	X	x	x	X					
	tv15	X	X	X	X			X	X					
	tv16	X	X	X	X		X	x	X					
	tv20	X	X	X	X	X	x	x	X					
	tv21	X	X	X	X		X	x	X					
	tv22	X	X	X	X			X	X					
	tv23	X	X	X	X	X	x	x	X					
	tv24	X	X	X	X	X	x	x	X					
	tv25	X	X	X	X		X	x	X					
	tv26	X	X	X	X			X	X					
	tv27	X	X	X	X	X	x	x	X					
CELP	ce00	X	X	X	X	X	X	X	X	X	X			
	ce01	X	X	X	X	X	X	X	X	X	X			
	ce02	X	X	X	X	X	X	X	X	X	X			
	ce03	X	X	X	X	X	X	X	X	X	X			
	ce04	X	X	X	X	X	X	X	X	X	X			
	ce05	X	X	X	X	X	X	X	X	X	X			
	ce06	X	X	X	X	X	X	X	X	X	X			
	ce07	X	X	X	X	X	X	X	X	X	X			
	ce08	X	X	X	X	X	X	X	X	X	X			
	ce09	X	X	X	X	X	X	X	X	X	X			
	ce10	X	X	X	X	X	X	X	X	X	X			
	ce11	X	X	X	X	X	X	X	X	X	X			
	ce12	X	X	X	X	X	X	X	X	X	X			
	ce13	X	X	X	X	X	X	X	X	X	X			
	ce14	X	X	X	X	X	X	X	X	X	X			
HVXC	hv01	X	X	X	X	X	X	X	X	X	X			
	hv02	X	X	X	X	X	X	X	X	X	X			
	hv03	X	X	X	X	X	X	X	X	X	X			
	hv04	X	X	X	X	X	X	X	X	X	X			
	hv05	X	X	X	X	X	X	X	X	X	X			
	hv06	X	X	X	X	X	X	X	X	X	X			
	hv07	X	X	X	X	X	X	X	X	X	X			
	hv08	X	X	X	X	X	X	X	X	X	X			
TTSI	tts1	X	X	X	X	X	X	X	X	X	X	X	X	X
	tts2	X	X	X	X	X	X	X	X	X	X	X	X	X
	tts3	X	X	X	X	X	X	X	X	X	X	X	X	X
	tts4	X	X	X	X	X	X	X	X	X	X	X	X	X
	tts5	X	X	X	X	X	X	X	X	X	X	X	X	X
	tts6	X	X	X	X	X	X	X	X	X	X	X	X	X
	tts7	X	X	X	X	X	X	X	X	X	X	X	X	X
	tts8	X	X	X	X	X	X	X	X	X	X	X	X	X
Algorithmic Synthesis	sy001	X	X	X	X							X	X	X
	sy002	X	X	X	X							X	X	X
	sy003	X	X	X	X							X	X	X
	sy004	X	X	X	X							X	X	X
	sy005			X	X								X	X
	sy006				X									X
	sy007	X	X	X	X							X	X	X
	sy008			X	X								X	X
	sy009				X									X
	sy010	X	X	X	X							X	X	X
	sy011	X	X	X	X							X	X	X
	sy012	X	X	X	X							X	X	X
	sy013	X	X	X	X							X	X	X

© ISO/IEC 2007 – All rights reserved
Copyright International Organization for Standardization
Provided by IHS under license with ISO
No reproduction or networking permitted without license from IHS
Not for Resale

Table 104b

Object type	sequence name	High Quality Audio Profile								Low Delay Audio Profile								Natural Audio Profile				Mobile Audio Internetworking Profile					
	Level	**1**	**2**	**3**	**4**	**5**	**6**	**7**	**8**	**1**	**2**	**3**	**4**	**5**	**6**	**7**	**8**	**1**	**2**	**3**	**4**	**1**	**2**	**3**	**4**	**5**	**6**
AAC LC	al00	≥7	≥3	≥3	≥3	≥7	≥3	≥3	≥3									≥3	X	≥3	X						
	al01	≥7	≥3	≥3	≥3	≥7	≥3	≥3	≥3									≥3	X	≥3	X						
	al02	≥7	≥3	≥3	≥3	≥7	≥3	≥3	≥3									≥3	X	≥3	X						
	al03	≥7	≥3	≥3	≥3	≥7	≥3	≥3	≥3									≥3	X	≥3	X						
	al04	≥7	≥3	≥3	≥3	≥7	≥3	≥3	≥3									≥3	X	≥3	X						
	al05	≥7	≥3	≥3	≥3	≥7	≥3	≥3	≥3									≥3	X	≥3	X						
	al06			≥3	≥3			≥3	≥3									≥3	X	≥3	X						
	al07																	≥3	X	≥3	X						
	al08																		≥4		≥4						
	al14	≥7	≥3	≥3	≥3	≥7	≥3	≥3	≥3									≥3	X	≥3	X						
	al15				≥3				≥3									≥4	X	≥4	X						
	al16			≥3	≥3			≥3	≥3									≥3	X	≥3	X						
	al17	≥7	≥3	≥3	≥3	≥7	≥3	≥3	≥3									≥3	X	≥3	X						
	al18	≥7	≥3	≥3	≥3	≥7	≥3	≥3	≥3									≥3	X	≥3	X						
	al19	≥7	≥3	≥3	≥3	≥7	≥3	≥3	≥3									≥3	X	≥3	X						
AAC main	am00																	≥3	X	≥3	X						
	am01																	≥3	X	≥3	X						
	am02																	≥3	X	≥3	X						
	am03																	≥7	X	≥7	X						
	am04																	≥3	X	≥3	X						
	am05																	≥6	X	≥6	X						
	am06																	≥3	X	≥3	X						
	am07																	≥5	X	≥5	X						
AAC SSR	as00																	≥3	X	≥3	X						
	as01																	≥3	X	≥3	X						
	as02																	≥3	X	≥3	X						
	as03																	≥3	X	≥3	X						
	as04																	≥3	X	≥3	X						
	as05																	≥3	X	≥3	X						
	as06																	≥3	X	≥3	X						
	as07																	≥3	X	≥3	X						
	as08																	≥3	X	≥3	X						
	as09																	≥3	X	≥3	X						
	as10																	≥3	X	≥3	X						
	as11																	≥3	X	≥3	X						
	as12																	≥3	X	≥3	X						
	as13																	≥5	X	≥5	X						
	as14																	≥5	X	≥5	X						
	as15																	≥6	X	≥6	X						
	as16																	≥6	X	≥6	X						
	as17																	≥3	X	≥3	X						
AAC LTP	ap01		X	X	X		X	X	X									X	X	X	X						
	ap02		X	X	X		X	X	X									X	X	X	X						
	ap03		X	X	X		X	X	X									X	X	X	X						
	ap04		X	X	X		X	X	X									X	X	X	X						
	ap05		X	X	X		X	X	X									X	X	X	X						
AAC scalable	ac01		X	X	X		X	X	X									X	X	X	X						
	ac02		X	X	X		X	X	X									X	X	X	X						
	ac03		X	X	X		X	X	X									X	X	X	X						
	ac04 Layer 0	X	X	X	X	X	X	X	X									X	X	X	X						
	ac04 Layer 1 – 7		X	X	X		X	X	X									X	X	X	X						
	ac05 Layer 0	X	X	X	X	X	X	X	X									X	X	X	X						
	ac05 Layer 1 – 7		X	X	X		X	X	X									X	X	X	X						
	ac06 Layer 0	X	X	X	X	X	X	X	X									X	X	X	X						
	ac06 Layer 1 – 4	X	X	X	X	X	X	X	X									X	X	X	X						

--`,,```,,,,````-`-`,,`,,`,`,,`---
© ISO/IEC 2007 – All rights reserved
Copyright International Organization for Standardization
Provided by IHS under license with ISO
No reproduction or networking permitted without license from IHS
Not for Resale

	ac08		X	X	X		X	X	X								X	X	X	X						
	ac09		X	X	X		X	X	X								X	X	X	X						
	ac10 Layer 0	X	X	X	X	X	X	X	X								X	X	X	X						
	ac10 Layer 1 – 4	X	X	X	X	X	X	X	X								X	X	X	X						
	ac12	X	X	X	X	X	X	X	X								X	X	X	X						
	ac13 Layer 0	X	X	X	X	X	X	X	X								X	X	X	X						
	ac13 Layer 1		X	X	X		X	X	X								X	X	X	X						
	ac14 Layer 0	X	X	X	X	X	X	X	X								X	X	X	X						
	ac14 Layer 1 – 2		X	X	X		X	X	X								X	X	X	X						
	ac15 Layer 0	X	X	X	X	X	X	X	X								X	X	X	X						
	ac15 Layer 1 – 2																	X	X	X						
	ac16 Layer 0 – 1	X	X	X	X												X	X	X	X						
	ac16 Layer 2	X	X	X	X												X	X	X	X						
	ac17 Layer 0 – 1		X	X	X												X	X	X	X						
	ac17 Layer 2		X	X	X												X	X	X	X						
	ac18		X	X	X												X	X	X	X						
	ac19																X	X	X	X						
	ac20		X	X	X												X	X	X	X						
	ac22		X	X	X												X	X	X	X						
Twin VQ	tv00																X	X	X	X						
	tv01																X	X	X	X						
	tv02																X	X	X	X						
	tv03																X	X	X	X						
	tv04																X	X	X	X						
	tv05																X	X	X	X						
	tv06																X	X	X	X						
	tv07																X	X	X	X						
	tv11																X	X	X	X						
	tv14																X	X	X	X						
	tv15																X	X	X	X						
	tv16																X	X	X	X						
	tv20																X	X	X	X						
	tv21																X	X	X	X						
	tv22																X	X	X	X						
	tv23																X	X	X	X						
	tv24																X	X	X	X						
	tv25																X	X	X	X						
	tv26																X	X	X	X						
	tv27																X	X	X	X						
CELP	ce00	X	X	X	X	X	X	X	X	X	X	X	X	X	X	X	X	X	X	X						
	ce01	X	X	X	X	X	X	X	X		X	X	X		X	X	X	X	X	X						
	ce02	X	X	X	X	X	X	X	X	X	X	X	X	X	X	X	X	X	X	X						
	ce03	X	X	X	X	X	X	X	X		X	X	X		X	X	X	X	X	X						
	ce04	X	X	X	X	X	X	X	X	X	X	X	X	X	X	X	X	X	X	X						
	ce05	X	X	X	X	X	X	X	X		X	X	X		X	X	X	X	X	X						
	ce06	X	X	X	X	X	X	X	X		X	X	X		X	X	X	X	X	X						
	ce07	X	X	X	X	X	X	X	X		X	X	X		X	X	X	X	X	X						
	ce08	X	X	X	X	X	X	X	X		X	X	X		X	X	X	X	X	X						
	ce09	X	X	X	X	X	X	X	X		X	X	X		X	X	X	X	X	X						
	ce10	X	X	X	X	X	X	X	X		X	X	X		X	X	X	X	X	X						
	ce11	X	X	X	X	X	X	X	X		X	X	X		X	X	X	X	X	X						
	ce12	X	X	X	X	X	X	X	X		X	X	X		X	X	X	X	X	X						
	ce13	X	X	X	X	X	X	X	X		X	X	X		X	X	X	X	X	X						
	ce14	X	X	X	X	X	X	X	X		X	X	X		X	X	X	X	X	X						
HVXC	hv01									X	X	X	X	X	X	X	X	X	X	X						
	hv02									X	X	X	X	X	X	X	X	X	X	X						
	hv03									X	X	X	X	X	X	X	X	X	X	X						
	hv04									X	X	X	X	X	X	X	X	X	X	X						
	hv05									X	X	X	X	X	X	X	X	X	X	X						
	hv06									X	X	X	X	X	X	X	X	X	X	X						
	hv07									X	X	X	X	X	X	X	X	X	X	X						
	hv08									X	X	X	X	X	X	X	X	X	X	X						
TTSI	tts1									X	X	X	X	X	X	X	X	X	X	X						
	tts2									X	X	X	X	X	X	X	X	X	X	X						
	tts3									X	X	X	X	X	X	X	X	X	X	X						
	tts4									X	X	X	X	X	X	X	X	X	X	X						
	tts5									X	X	X	X	X	X	X	X	X	X	X						
	tts6									X	X	X	X	X	X	X	X	X	X	X						
	tts7									X	X	X	X	X	X	X	X	X	X	X						
	tts8									X	X	X	X	X	X	X	X	X	X	X						

© ISO/IEC 2007 – All rights reserved
Copyright International Organization for Standardization
Provided by IHS under license with ISO
No reproduction or networking permitted without license from IHS
Not for Resale

Algorithmic Synthesis	sy001																								
	sy002																								
	sy003																								
	sy004																								
	sy005																								
	sy006																								
	sy007																								
	sy008																								
	sy009																								
	sy010																								
	sy011																								
	sy012																								
	sy013																								
ER AAC LC	er_al10_ep0	≥7	≥3	≥3	≥3	≥7	≥3	≥3	≥3								≥3	X	≥3	X					
	er_al10_ep1	≥7	≥3	≥3	≥3	≥7	≥3	≥3	≥3								≥3	X	≥3	X					
	er_al10_ep3_crc01_08	X	X	X	X	X	X	X	X								X	X	X	X					
	er_al10_ep3_crc01_22	X	X	X	X	X	X	X	X								X	X	X	X					
	er_al12_ep0	≥7	≥3	≥3	≥3	≥7	≥3	≥3	≥3								≥3	X	≥3	X					
	er_al12_ep1	≥7	≥3	≥3	≥3	≥7	≥3	≥3	≥3								≥3	X	≥3	X					
	er_al15_ep0	≥7	≥3	≥3	≥3	≥7	≥3	≥3	≥3								≥3	X	≥3	X					
	er_al15_ep1	≥7	≥3	≥3	≥3	≥7	≥3	≥3	≥3								≥3	X	≥3	X					
	er_al15_ep3_srcpc01_08					X	X	X	X										X	X					
	er_al15_ep3_srcpc01_48						X	X	X										X	X					
	er_al18_ep0	≥7	≥3	≥3	≥3	≥7	≥3	≥3	≥3								≥3	X	≥3	X					
	er_al18_ep1	≥7	≥3	≥3	≥3	≥7	≥3	≥3	≥3								≥3	X	≥3	X					
	er_al18_ep3_crc02_11	X	X	X	X	X	X	X	X								X	X	X	X					
	er_al18_ep3_crc02_24		X	X	X		X	X	X								X	X	X	X					
	er_al18_ep3_srcpc02_11					X	X	X	X										X	X					
	er_al18_ep3_srcpc02_64																			X					
	er_al21_ep0	≥7	≥3	≥3	≥3	≥7	≥3	≥3	≥3								≥3	X	≥3	X					
	er_al21_ep1	≥7	≥3	≥3	≥3	≥7	≥3	≥3	≥3								≥3	X	≥3	X					
	er_al21_ep3_crc03_12	X	X	X	X	X	X	X	X								X	X	X	X					
	er_al21_ep3_crc03_32		X	X	X		X	X	X								X	X	X	X					
	er_al23_ep0	≥7	≥3	≥3	≥3	≥7	≥3	≥3	≥3								≥3	X	≥3	X					
	er_al23_ep1	≥7	≥3	≥3	≥3	≥7	≥3	≥3	≥3								≥3	X	≥3	X					
	er_al23_ep3_crc04_16	X	X	X	X	X	X	X	X								X	X	X	X					
	er_al23_ep3_crc04_44		X	X	X		X	X	X								X	X	X	X					
	er_al26_ep0	≥7	≥3	≥3	≥3	≥7	≥3	≥3	≥3								≥3	X	≥3	X					
	er_al26_ep1	≥7	≥3	≥3	≥3	≥7	≥3	≥3	≥3								≥3	X	≥3	X					
	er_al26_ep3_srcpc03_12					X	X	X	X										X	X					
	er_al26_ep3_srcpc03_88																			X					
ER AAC LTP	er_ap10_ep0	≥7	≥3	≥3	≥3	≥7	≥3	≥3	≥3								≥3	X	≥3	X	≥6	≥3	≥3	≥6	≥3	≥3
	er_ap10_ep1	≥7	≥3	≥3	≥3	≥7	≥3	≥3	≥3								≥3	X	≥3	X	≥6	≥3	≥3	≥6	≥3	≥3
	er_ap14_ep0	≥7	≥3	≥3	≥3	≥7	≥3	≥3	≥3								≥3	X	≥3	X	≥6	≥3	≥3	≥6	≥3	≥3
	er_ap14_ep1	≥7	≥3	≥3	≥3	≥7	≥3	≥3	≥3								≥3	X	≥3	X	≥6	≥3	≥3	≥6	≥3	≥3
	er_ap14_ep3_srs02_12					X	X	X	X										X	X				X	X	X
	er_ap14_ep3_srs02_32						X	X	X										X	X					X	X
	er_ap27_ep0	≥7	≥3	≥3	≥3	≥7	≥3	≥3	≥3								≥3	X	≥3	X		≥3	≥3		≥3	≥3
	er_ap27_ep1	≥7	≥3	≥3	≥3	≥7	≥3	≥3	≥3								≥3	X	≥3	X		≥3	≥3		≥3	≥3
	er_ap27_ep3_srcpc04_16					X	X	X	X										X	X					X	X
	er_ap27_ep3_srcpc04_96																			X						
ER AAC LD	er_ad100_ep0											≥3	≥3			≥3	≥3	≥3	X	≥3	X	≥6	≥3	≥3	≥6	≥3	≥3
	er_ad100_ep1											≥3	≥3			≥3	≥3	≥3	X	≥3	X	≥6	≥3	≥3	≥6	≥3	≥3
	er_ad103_ep0											≥3	≥3			≥3	≥3	≥3	X	≥3	X	≥6	≥3	≥3	≥6	≥3	≥3
	er_ad103_ep1											≥3	≥3			≥3	≥3	≥3	X	≥3	X	≥6	≥3	≥3	≥6	≥3	≥3
	er_ad107_ep0											≥3	≥3			≥3	≥3	≥3	X	≥3	X	≥6	≥3	≥3	≥6	≥3	≥3
	er_ad107_ep1											≥3	≥3			≥3	≥3	≥3	X	≥3	X	≥6	≥3	≥3	≥6	≥3	≥3
	er_ad109_ep0											≥3	≥3			≥3	≥3	≥3	X	≥3	X	≥6	≥3	≥3	≥6	≥3	≥3
	er_ad109_ep1											≥3	≥3			≥3	≥3	≥3	X	≥3	X	≥6	≥3	≥3	≥6	≥3	≥3
	er_ad110_ep0											≥3	≥3			≥3	≥3	≥3	X	≥3	X	≥6	≥3	≥3	≥6	≥3	≥3
	er_ad110_ep1											≥3	≥3			≥3	≥3	≥3	X	≥3	X	≥6	≥3	≥3	≥6	≥3	≥3
	er_ad111_ep0											≥3	≥3			≥3	≥3	≥3	X	≥3	X	≥6	≥3	≥3	≥6	≥3	≥3
	er_ad111_ep1											≥3	≥3			≥3	≥3	≥3	X	≥3	X	≥6	≥3	≥3	≥6	≥3	≥3
	er_ad115_ep0											≥3	≥3			≥3	≥3	≥3	X	≥3	X	≥6	≥3	≥3	≥6	≥3	≥3
	er_ad115_ep1											≥3	≥3			≥3	≥3	≥3	X	≥3	X	≥6	≥3	≥3	≥6	≥3	≥3
	er_ad115_ep3_srs01_16															X	X			X	X				X	X	X
	er_ad115_ep3_srs01_44															X	X			X	X					X	X
	er_ad202_ep0												≥3				≥3	≥3	X	≥3	X		≥3	≥3		≥3	≥3

© ISO/IEC 2007 – All rights reserved

Copyright International Organization for Standardization
Provided by IHS under license with ISO
No reproduction or networking permitted without license from IHS
Not for Resale

	er_ad202_ep1											≥3				≥3	≥3	X	≥3	X		≥3	≥3		≥3	≥3
	er_ad206_ep0											≥3				≥3	≥3	X	≥3	X		≥3	≥3		≥3	≥3
	er_ad206_ep1											≥3				≥3	≥3	X	≥3	X		≥3	≥3		≥3	≥3
	er_ad206_ep3_srs03_08															X			X	X					X	X
	er_ad206_ep3_srs03_48															X			X	X					X	X
	er_ad214_ep0											≥3				≥3	≥3	X	≥3	X		≥3	≥3		≥3	≥3
	er_ad214_ep1											≥3				≥3	≥3	X	≥3	X		≥3	≥3		≥3	≥3
	er_ad218_ep0											≥3				≥3	≥3	X	≥3	X		≥3	≥3		≥3	≥3
	er_ad218_ep1											≥3				≥3	≥3	X	≥3	X		≥3	≥3		≥3	≥3
	er_ad218_ep3_srs04_11															X			X	X					X	X
	er_ad218_ep3_srs04_64																			X						
	er_ad100np_ep0										≥3	≥3			≥3	≥3	≥3	X	≥3	X	≥6	≥3	≥3	≥6	≥3	≥3
	er_ad100np_ep1										≥3	≥3			≥3	≥3	≥3	X	≥3	X	≥6	≥3	≥3	≥6	≥3	≥3
	er_ad103np_ep0										≥3	≥3			≥3	≥3	≥3	X	≥3	X	≥6	≥3	≥3	≥6	≥3	≥3
	er_ad103np_ep1										≥3	≥3			≥3	≥3	≥3	X	≥3	X	≥6	≥3	≥3	≥6	≥3	≥3
	er_ad107np_ep0										≥3	≥3			≥3	≥3	≥3	X	≥3	X	≥6	≥3	≥3	≥6	≥3	≥3
	er_ad107np_ep1										≥3	≥3			≥3	≥3	≥3	X	≥3	X	≥6	≥3	≥3	≥6	≥3	≥3
	er_ad110np_ep0										≥3	≥3			≥3	≥3	≥3	X	≥3	X	≥6	≥3	≥3	≥6	≥3	≥3
	er_ad110np_ep1										≥3	≥3			≥3	≥3	≥3	X	≥3	X	≥6	≥3	≥3	≥6	≥3	≥3
	er_ad111np_ep0										≥3	≥3			≥3	≥3	≥3	X	≥3	X	≥6	≥3	≥3	≥6	≥3	≥3
	er_ad111np_ep1										≥3	≥3			≥3	≥3	≥3	X	≥3	X	≥6	≥3	≥3	≥6	≥3	≥3
	er_ad115np_ep0										≥3	≥3			≥3	≥3	≥3	X	≥3	X	≥6	≥3	≥3	≥6	≥3	≥3
	er_ad115np_ep1										≥3	≥3			≥3	≥3	≥3	X	≥3	X	≥6	≥3	≥3	≥6	≥3	≥3
	er_ad202np_ep0											≥3				≥3	≥3	X	≥3	X		≥3	≥3		≥3	≥3
	er_ad202np_ep1											≥3				≥3	≥3	X	≥3	X		≥3	≥3		≥3	≥3
	er_ad206np_ep0											≥3				≥3	≥3	X	≥3	X		≥3	≥3		≥3	≥3
	er_ad206np_ep1											≥3				≥3	≥3	X	≥3	X		≥3	≥3		≥3	≥3
	er_ad214np_ep0											≥3				≥3	≥3	X	≥3	X		≥3	≥3		≥3	≥3
	er_ad214np_ep1											≥3				≥3	≥3	X	≥3	X		≥3	≥3		≥3	≥3
	er_ad218np_ep0											≥3				≥3	≥3	X	≥3	X		≥3	≥3		≥3	≥3
	er_ad218np_ep1											≥3				≥3	≥3	X	≥3	X		≥3	≥3		≥3	≥3
ER AAC scalable	er_ac111_ep0		X	X	X		X	X	X								X	X	X	X		X	X		X	X
	er_ac111_ep1		X	X	X		X	X	X								X	X	X	X		X	X		X	X
	er_ac111_ep3_cplx01						X	X	X										X	X					X	X
	er_ac118_ep0																	X		X						
	er_ac118_ep1																	X		X						
	er_ac119_ep0 Layer 0-1	X	X	X	X	X	X	X	X								X	X	X	X	X	X	X	X	X	X
	er_ac119_ep0 Layer 2-3	X	X	X	X	X	X	X	X								X	X	X	X		X	X		X	X
	er_ac119_ep1 Layer0-1	X	X	X	X	X	X	X	X								X	X	X	X	X	X	X	X	X	X
	er_ac119_ep1 Layer 2-3	X	X	X	X	X	X	X	X								X	X	X	X		X	X		X	X
	er_ac121_ep0		X	X	X		X	X	X								X	X	X	X		X	X		X	X
	er_ac123_ep0		X	X	X		X	X	X								X	X	X	X		X	X		X	X
	er_ac123_ep1		X	X	X		X	X	X								X	X	X	X		X	X		X	X
	er_ac123_ep3_cplx02						X	X	X										X	X					X	X
	er_ac211_ep0 Layer 0	X	X	X	X	X	X	X	X								X	X	X	X	X	X	X	X	X	X
	er_ac211_ep0 Layer 1		X	X	X		X	X	X								X	X	X	X	X	X	X	X	X	X
	er_ac211_ep0 Layer 2		X	X	X		X	X	X								X	X	X	X		X	X		X	X
	er_ac211_ep1 Layer 0	X	X	X	X	X	X	X	X								X	X	X	X	X	X	X	X	X	X
	er_ac211_ep1 Layer 1		X	X	X		X	X	X								X	X	X	X	X	X	X	X	X	X
	er_ac211_ep1 Layer 1		X	X	X		X	X	X								X	X	X	X		X	X		X	X
	er_ac211_ep3_cplx03 Layer 0	X	X	X	X	X	X	X	X								X	X	X	X	X	X	X	X	X	X
	er_ac211_ep3_cplx03 Layer 1						X	X	X										X	X				X	X	X
	er_ac211_ep3_cplx03 Layer 2		X	X	X		X	X	X								X	X	X	X		X	X		X	X
	er_ac221_ep0 Layer 0	X	X	X	X	X	X	X	X								X	X	X	X	X	X	X	X	X	X
	er_ac221_ep0 Layer 1-2	X	X	X	X	X	X	X	X								X	X	X	X		X	X		X	X
	er_ac221_ep1 Layer 0	X	X	X	X	X	X	X	X								X	X	X	X	X	X	X	X	X	X
	er_ac221_ep1 Layer 1-2	X	X	X	X	X	X	X	X								X	X	X	X		X	X		X	X
	er_ac221_ep3_cplx04 Layer 0	X	X	X	X	X	X	X	X								X	X	X	X	X	X	X	X	X	X
	er_ac221_ep3_cplx04 Layer 1					X	X	X	X									X		X					X	X
	er_ac221_ep3_cplx04 Layer 2	X	X	X	X	X	X	X	X								X	X	X	X		X	X		X	X
	er_ac311_ep0		X	X	X		X	X	X								X	X	X	X		X	X		X	X
	er_ac311_ep1		X	X	X		X	X	X								X	X	X	X		X	X		X	X

--`,,```,,,,````-`-`,,`,,`,`,,`---

© ISO/IEC 2007 – All rights reserved
Copyright International Organization for Standardization
Provided by IHS under license with ISO
No reproduction or networking permitted without license from IHS
Not for Resale

	er_ac311_ep3_cplx05 Layer 0		X	X	X		X	X	X									X	X	X	X		X	X		X	X
	er_ac311_ep3_cplx05 Layer 1-2						X	X	X											X	X					X	X
	er_ac321_ep0 Layer 0		X	X	X		X	X	X									X	X	X	X	X	X	X	X	X	X
	er_ac321_ep0 Layer 1-2		X	X	X		X	X	X									X	X	X	X		X	X		X	X
	er_ac321_ep1 Layer 0		X	X	X		X	X	X									X	X	X	X	X	X	X	X	X	X
	er_ac321_ep1 Layer 1-2		X	X	X		X	X	X									X	X	X	X		X	X		X	X
	er_ac321_ep3_cplx06 Layer 0		X	X	X		X	X	X									X	X	X	X		X	X		X	X
	er_ac321_ep3_cplx06 Layer 1-2						X	X	X											X	X					X	X
ER TwinVQ	er_tv01_ep0																	X	X	X	X	X	X	X	X	X	X
	er_tv01_ep1																	X	X	X	X	X	X	X	X	X	X
	er_tv01_ep2																			X	X				X	X	X
	er_tv02_ep0																	X	X	X	X	X	X	X	X	X	X
	er_tv02_ep1																	X	X	X	X	X	X	X	X	X	X
	er_tv02_ep2																			x	X				X	X	X
ER BSAC	er_bs01_ep0																	X	X			≥6	<6	<6			
	er_bs01_ep1																	X	X			≥6	<6	<6			
	er_bs01_ep2																			X	X				≥6	<6	<6
	er_bs02_ep0																	X	X			≥6	<6	<6			
	er_bs02_ep1																	X	X			≥6	<6	<6			
	er_bs02_ep2																			X	X				≥6	<6	<6
	er_bs03_ep0																	X	X				X	X			
	er_bs03_ep1																	X	X				X	X			
	er_bs03_ep2																			X	X					X	X
	er_bs04_ep0																	X	X				X	X			
	er_bs04_ep1																	X	X				X	X			
	er_bs04_ep2																			X	X					X	X
	er_bs05_ep0																	X	X				X	X			
	er_bs05_ep1																	X	X				X	X			
	er_bs05_ep2																			X	X					X	X
	er_bs06_ep0																	X	X				X	X			
	er_bs06_ep1																	X	X				X	X			
	er_bs06_ep2																			X	X					X	X
ER BSAC	er_bs07_ep0																	X	X			≥6	≥3	≥3			
	er_bs07_ep1																	X	X			≥6	≥3	≥3			
	er_bs07_ep3																			X	X				≥6	≥3	≥3
	er_bs08_ep0																	X	X			≥6	≥3	≥3			
	er_bs08_ep1																	X	X			≥6	≥3	≥3			
	er_bs08_ep3																			X	X				≥6	≥3	≥3
ER CELP	er_ce00_ep0	X	X	X	X	X	X	X	X	X	X	X	X	X	X	X	X	X	X	X	X						
	er_ce00_ep1	X	X	X	X	X	X	X	X	X	X	X	X	X	X	X	X	X	X	X	X						
	er_ce00_ep2					X	X	X	X					X	X	X	X			X	X						
	er_ce01_ep0	X	X	X	X	X	X	X	X	X	X	X	X	X	X	X	X	X	X	X	X						
	er_ce01_ep1	X	X	X	X	X	X	X	X	X	X	X	X	X	X	X	X	X	X	X	X						
	er_ce02_ep0	X	X	X	X	X	X	X	X	X	X	X	X	X	X	X	X	X	X	X	X						
	er_ce02_ep1	X	X	X	X	X	X	X	X	X	X	X	X	X	X	X	X	X	X	X	X						
	er_ce02_ep2					X	X	X	X					X	X	X	X			X	X						
	er_ce03_ep0	X	X	X	X	X	X	X	X	X	X	X	X	X	X	X	X	X	X	X	X						
	er_ce03_ep1	X	X	X	X	X	X	X	X	X	X	X	X	X	X	X	X	X	X	X	X						
	er_ce04_ep0	X	X	X	X	X	X	X	X	X	X	X	X	X	X	X	X	X	X	X	X						
	er_ce04_ep1	X	X	X	X	X	X	X	X	X	X	X	X	X	X	X	X	X	X	X	X						
	er_ce05_ep0	X	X	X	X	X	X	X	X	X	X	X	X	X	X	X	X	X	X	X	X						
	er_ce05_ep1	X	X	X	X	X	X	X	X	X	X	X	X	X	X	X	X	X	X	X	X						
	er_ce06_ep0	X	X	X	X	X	X	X	X		X	X	X		X	X	X	X	X	X	X						
	er_ce06_ep1	X	X	X	X	X	X	X	X		X	X	X		X	X	X	X	X	X	X						
	er_ce06_ep2					X	X	X	X						X	X	X			X	X						
	er_ce07_ep0	X	X	X	X	X	X	X	X		X	X	X		X	X	X	X	X	X	X						
	er_ce07_ep1	X	X	X	X	X	X	X	X		X	X	X		X	X	X	X	X	X	X						
	er_ce08_ep0	X	X	X	X	X	X	X	X		X	X	X		X	X	X	X	X	X	X						
	er_ce08_ep1	X	X	X	X	X	X	X	X		X	X	X		X	X	X	X	X	X	X						
	er_ce09_ep0	X	X	X	X	X	X	X	X		X	X	X		X	X	X	X	X	X	X						
	er_ce09_ep1	X	X	X	X	X	X	X	X		X	X	X		X	X	X	X	X	X	X						
	er_ce09_ep2					X	X	X	X						X	X	X			X	X						
	er_ce10_ep0	X	X	X	X	X	X	X	X		X	X	X		X	X	X	X	X	X	X						
	er_ce10_ep1	X	X	X	X	X	X	X	X		X	X	X		X	X	X	X	X	X	X						
	er_ce11_ep0	X	X	X	X	X	X	X	X		X	X	X		X	X	X	X	X	X	X						
	er_ce11_ep1	X	X	X	X	X	X	X	X		X	X	X		X	X	X	X	X	X	X						

© ISO/IEC 2007 – All rights reserved
27
Copyright International Organization for Standardization
Provided by IHS under license with ISO
No reproduction or networking permitted without license from IHS
Not for Resale

	er_ce12_ep0	X	X	X	X	X	X	X	X		X	X	X		X	X	X	X	X	X	X					
	er_ce12_ep1	X	X	X	X	X	X	X	X		X	X	X		X	X	X	X	X	X	X					
	er_ce13_ep0	X	X	X	X	X	X	X	X		X	X	X		X	X	X	X	X	X	X					
	er_ce13_ep1	X	X	X	X	X	X	X	X		X	X	X		X	X	X	X	X	X	X					
	er_ce13_ep2					X	X	X	X						X	X	X			X	X					
	er_ce14_ep0	X	X	X	X	X	X	X	X		X	X	X		X	X	X	X	X	X	X					
	er_ce14_ep1	X	X	X	X	X	X	X	X		X	X	X		X	X	X	X	X	X	X					
	er_ce15_ep0	X	X	X	X	X	X	X	X		X	X	X		X	X	X	X	X	X	X					
	er_ce15_ep1	X	X	X	X	X	X	X	X		X	X	X		X	X	X	X	X	X	X					
	er_ce15_ep2					X	X	X	X						X	X	X			X	X					
	er_ce16_ep0	X	X	X	X	X	X	X	X		X	X	X		X	X	X	X	X	X	X					
	er_ce16_ep1	X	X	X	X	X	X	X	X		X	X	X		X	X	X	X	X	X	X					
	er_ce17_ep0	X	X	X	X	X	X	X	X		X	X	X		X	X	X	X	X	X	X					
	er_ce17_ep1	X	X	X	X	X	X	X	X		X	X	X		X	X	X	X	X	X	X					
	er_ce18_ep0	X	X	X	X	X	X	X	X		X	X	X		X	X	X	X	X	X	X					
	er_ce18_ep1	X	X	X	X	X	X	X	X		X	X	X		X	X	X	X	X	X	X					
	er_ce18_ep2					X	X	X	X						X	X	X			X	X					
ER HVXC	er_hv01_ep0									X	X	X	X	X	X	X	X	X	X	X	X					
	er_hv01_ep1									X	X	X	X	X	X	X	X	X	X	X	X					
	er_hv02_ep0									X	X	X	X	X	X	X	X	X	X	X	X					
	er_hv02_ep1									X	X	X	X	X	X	X	X	X	X	X	X					
	er_hv03_ep0									X	X	X	X	X	X	X	X	X	X	X	X					
	er_hv03_ep1									X	X	X	X	X	X	X	X	X	X	X	X					
	er_hv03_ep2_crc													X	X	X	X			X	X					
	er_hv03_ep2_fec													X	X	X	X			X	X					
	er_hv04_ep0									X	X	X	X	X	X	X	X	X	X	X	X					
	er_hv04_ep1									X	X	X	X	X	X	X	X	X	X	X	X					
	er_hv04_ep2_crc													X	X	X	X			X	X					
	er_hv04_ep2_fec													X	X	X	X			X	X					
	er_hv05_ep0									X	X	X	X	X	X	X	X	X	X	X	X					
	er_hv05_ep1									X	X	X	X	X	X	X	X	X	X	X	X					
	er_hv06_ep0									X	X	X	X	X	X	X	X	X	X	X	X					
	er_hv06_ep1									X	X	X	X	X	X	X	X	X	X	X	X					
	er_hv07_ep0									X	X	X	X	X	X	X	X	X	X	X	X					
	er_hv07_ep1									X	X	X	X	X	X	X	X	X	X	X	X					
	er_hv08_ep0									X	X	X	X	X	X	X	X	X	X	X	X					
	er_hv08_ep1									X	X	X	X	X	X	X	X	X	X	X	X					
	er_hv09_ep0									X	X	X	X	X	X	X	X	X	X	X	X					
	er_hv09_ep1									X	X	X	X	X	X	X	X	X	X	X	X					
	er_hv10_ep0									X	X	X	X	X	X	X	X	X	X	X	X					
	er_hv10_ep1									X	X	X	X	X	X	X	X	X	X	X	X					
ER HILN	er_hi00_ep0																	X	X	X	X					
	er_hi01_ep0																	X	X	X	X					
	er_hi02_ep0																	X	X	X	X					
	er_hi03_ep0																	X	X	X	X					
	er_hi04_ep0																	X	X	X	X					
	er_hi05_ep0																	X	X	X	X					
	er_hi06_ep0																	X	X	X	X					
	er_hi07_ep0																	X	X	X	X					
	er_hi10_ep0																	X	X	X	X					
	er_hi11_ep0																	X	X	X	X					
	er_hi12_ep0																	X	X	X	X					
	er_hi13_ep0																	X	X	X	X					
	er_hi14_ep0																	X	X	X	X					
	er_hi15_ep0																	X	X	X	X					
	er_hi16_ep0																	X	X	X	X					
	er_hi20_ep0																	X	X	X	X					
	er_hi21_ep0																	X	X	X	X					
	er_hi22_ep0																	X	X	X	X					
	er_hi23_ep0																	X	X	X	X					
	er_hi24_ep0																	X	X	X	X					
	er_hi25_ep0																	X	X	X	X					
	er_hi26_ep0																	X	X	X	X					
	er_hi26_ep1																	X	X	X	X					
	er_hi26_ep3_crc																			X	X					
	er_hi26_ep3_fec																			X	X					
	er_hi27_ep0																	X	X	X	X					
	er_hi27_ep1																	X	X	X	X					
	er_hi27_ep3_crc																			X	X					
	er_hi27_ep3_fec																			X	X					

© ISO/IEC 2007 – All rights reserved
Copyright International Organization for Standardization
Provided by IHS under license with ISO
No reproduction or networking permitted without license from IHS
Not for Resale

	er_hi28_ep0															X	X	X	X					
	er_hi28_ep1															X	X	X	X					
	er_hi28_ep3_crc																	X	X					
	er_hi28_ep3_fec																	X	X					
	er_hi29_ep0															X	X	X	X					
	er_hi29_ep1															X	X	X	X					
	er_hi29_ep3_crc																	X	X					
	er_hi29_ep3_fec																	X	X					
	er_hi30_ep0																X		X					
	er_hi31_ep0																X		X					
ER Parametric	er_pa00_ep0															X	X	X	X					
	er_pa01_ep0															X	X	X	X					
	er_pa02_ep0															X	X	X	X					
	er_pa03_ep0															X	X	X	X					

Table 104c

Object type	sequence name	AAC Low Delay Profile
	Level	**1**
ER AAC LD	er_ad100np_ep0	X
	er_ad103np_ep0	X
	er_ad107np_ep0	X
	er_ad109_ep0	X
	er_ad110np_ep0	X
	er_ad111np_ep0	X
	er_ad115np_ep0	X
	er_ad202np_ep0	X
	er_ad206np_ep0	X
	er_ad214np_ep0	X
	er_ad218np_ep0	X

© ISO/IEC 2007 – All rights reserved

Copyright International Organization for Standardization
Provided by IHS under license with ISO
No reproduction or networking permitted without license from IHS
Not for Resale

ICS 35.040

Price based on 29 pages

--`,,```,,,,````-`-`,,`,,`,`,,`---

© ISO/IEC 2007 – All rights reserved

Copyright International Organization for Standardization
Provided by IHS under license with ISO
No reproduction or networking permitted without license from IHS

Not for Resale