INTERNATIONAL STANDARD

ISO/IEC 14251

First edition
1995-08-01

Information technology — Data interchange on 12,7 mm 36-track magnetic tape cartridges

Technologies de l'information — Échange de données sur cartouches de bande magnétique de 12,7 mm, *36 pistes*

Reference number
ISO/IEC 14251:1995(E)

Copyright International Organization for Standardization
Provided by IHS under license with ISO
No reproduction or networking permitted without license from IHS

Not for Resale

Contents

Section 1 - General 1

1 Scope 1

2 Conformance 1

2.1 Magnetic tape cartridge 1
2.2 Generating system 1
2.3 Receiving system 1

3 References 2

4 Definitions 2

4.1 algorithm 2
4.2 algorithmically Processed Data 2
4.3 Beginning of Tape (BOT) 2
4.4 byte 2
4.5 Cyclic Redundancy Check (CRC) character 2
4.6 Data Records 2

4.6.1 Processed Data Record (PDR) 2
4.6.2 Host Data Record 2
4.6.3 Logical Data Record (LDR) 2
4.6.4 User Data Record (UDR) 2

4.7 End of Tape (EOT) 2
4.8 Error correcting code (ECC) 2
4.9 flux transition position 2
4.10 flux transition spacing 2
4.11 Frame 2
4.12 logical backwards 2
4.13 logical forwards 2
4.14 magnetic tape 2
4.15 Master Standard Reference tape 2
4.16 packet 3
4.17 pad byte 3
4.18 physical backward 3
4.19 physical forward 3
4.20 physical recording density 3

© ISO/IEC 1995
All rights reserved. Unless otherwise specified, no part of this publication may be reproduced or utilized in any form or by any means, electronic or mechanical, including photocopying and microfilm, without permission in writing from the publisher.

ISO/IEC Copyright Office • Case postale 56 • CH-1211 Genève 20 • Switzerland

Printed in Switzerland

Copyright International Organization for Standardization
Provided by IHS under license with ISO
No reproduction or networking permitted without license from IHS Not for Resale

4.21 Processed Data 3
4.22 Secondary Standard Reference tape 3
4.23 Standard Reference Amplitude (SRA) 3
4.24 Standard Reference Current 3
4.25 Tape Reference Edge 3
4.26 Test Recording Current 3
4.27 track 3
4.28 Typical Field 3
4.29 transformation 3
4.30 Wrap 3
4.31 Half-Wrap 3

5 Conventions and notations 3

5.1 Representation of numbers 3
5.2 Names 3
5.3 Acronyms 4

6 Environment and safety 4

6.1 Cartridge/tape testing environment 4
6.2 Cartridge operating environment 4
6.3 Cartridge storage environment 4
6.4 Safety requirements 5

6.4.1 Safeness 5
6.4.2 Flammability 5

6.5 Transportation 5

Section 2 - Characteristics of the tapes 5

7 Characteristics of the tapes 5
7.1 Material 5

7.2 Tape length 5
7.3 Tape width 5
7.4 Tape discontinuity 5
7.5 Total thickness of tape 5
7.6 Base material thickness 5
7.7 Longitudinal curvature 6

7.7.1 CST tape 6
7.7.2 ECCST tape 6

7.8 Out-of-plane distortions 6
7.9 Cupping 6
7.10 Dynamic frictional characteristics 6

7.10.1 Frictional drag between the recording surface and the back surface 6
7.10.2 Frictional drag between the tape recording surface and ferrite after environmental cycling 6

7.11 Coating adhesion 7
7.12 Flexural rigidity 8
7.13 Electrical resistance of coated surfaces 8
7.14 Tape durability 9
7.15 Inhibitor tape 9
7.16 Tape abrasivity 9
7.17 Accelerated life test 9
7.18 Data integrity test 9

7.18.1 Requirement 9

Copyright International Organization for Standardization
Provided by IHS under license with ISO
No reproduction or networking permitted without license from IHS Not for Resale

7.18.2 Procedure 9

7.19 Pre-recording condition 10
7.20 Magnetic recording characteristics 10

7.20.1 Typical field 10
7.20.2 Signal amplitude 10
7.20.3 Resolution 10
7.20.4 Overwrite 11
7.20.5 Narrow-band signal-to-noise ratio (NB-SNR) 11

7.21 Tape quality 11

7.21.1 Missing pulses 12
7.21.2 Missing pulse zones 12
7.21.3 Coincident Missing Pulse Zones 12

Section 3 - Cartridge 12

8 Dimensional and mechanical characteristics of the cartridge 12

8.1 Overall dimensions 13
8.2 Write-inhibit mechanism 13
8.3 Label area(s) of the rear side 14

8.3.1 Implementation of a single label area 14
8.3.2 Implementation for two label areas 14

8.4 Label area of the top side 14
8.5 Case opening 14
8.6 Locating notches 15
8.7 Locating areas 15
8.8 Inside configuration of the case around the case opening 15
8.9 Other external dimensions of the case 15

8.10 Central window 16
8.11 Stacking ribs 16
8.12 Recessed area 16
8.13 Flexibility of the case 16

8.13.1 Requirements 16
8.13.2 Procedure 17

8.14 Tape reel 17

8.14.1 Locking mechanism 17
8.14.2 Axis of rotation of the reel 17
8.14.3 Metallic insert 17
8.14.4 Toothed rim 17
8.14.5 Hub of the reel 18
8.14.6 Relative positions 18

8.14.7 Characteristics of the toothed rim 18
8.15 Leader block 19
8.16 Attachment of the tape to the leader block 19
8.17 Latching mechanism 20
8.18 Tape wind 20
8.19 Wind tension 20
8.20 Circumference of the tape reel 20
8.21 Moment of inertia 20
8.22 Cartridge case colours 21

Section 4 - Recording method and formats 30

Copyright International Organization for Standardization
Provided by IHS under license with ISO
No reproduction or networking permitted without license from IHS Not for Resale

9 Method of recording **30**

9.1 Physical recording density **30**
9.2 Bit cell length **30**
9.3 Average bit cell length **30**

9.3.1 Long-term average bit cell length **30**
9.3.2 Short-term average bit cell length **30**

9.4 Rate of change of the short-term average bit cell length **30**
9.5 Bit cell peak position **30**
9.6 Bit shift **31**
9.7 Total character skew **31**
9.8 Read signal amplitude **31**
9.9 Coincident missing pulse zones **31**

10 Track format **31**

10.1 Number of tracks **31**
10.2 Track positions **31**
10.3 Track width **32**
10.4 Azimuth **32**
10.5 Track identification **32**

11 Packet format **33**

11.1 Packets **33**
11.2 Packet ID **34**
11.3 UDR **35**
11.4 Packet trailer **35**

11.4.1 Packet trailer when data has been processed **35**
11.4.2 Packet trailer when the data has not been processed **35**

12 Data block format **35**

12.1 Data part **35**

12.1.1 Packet bytes **36**
12.1.2 Count field bytes **36**
12.1.3 Block ID bytes **36**

12.2 Allocation of the bytes of the data block to frames **36**

12.2.1 Prefix frames **37**
12.2.2 Data frames **37**
12.2.3 Residual frame 1 **38**
12.2.4 Residual frame 2 **39**
12.2.5 Suffix frames **40**

12.3 Error correction code (ECC) **40**
12.4 Recording of 8-bit bytes on the tape **41**
12.5 Recorded data block **41**

12.5.1 Preamble **42**
12.5.2 Beginning of data mark (BDM) **42**
12.5.3 Resync control frame **42**
12.5.4 End of data mark (EDM) **42**
12.5.5 Postamble **42**

12.6 Maximum data density **43**

13 Tape format **43**

Copyright International Organization for Standardization
Provided by IHS under license with ISO
No reproduction or networking permitted without license from IHS
Not for Resale

13.1 Zones 43
13.2 Density ID mark 43
13.3 VOLID mark 44
13.4 ID separator mark 45
13.5 Interblock gap 45
13.6 Erase gap 46

13.6.1 Normal erase gap 46
13.6.2 Extended erase gap 46

13.7 Tape mark 46
13.8 Wrap marks 46
13.9 Mark merge 47

13.9.1 IBG followed by a tape mark 47
13.9.2 Tape mark followed by an IBG 47
13.9.3 IBG followed by a erase gap 48
13.9.4 Erase gap followed by an IBG 48
13.9.5 IBG followed by a Wrap Mark 48
13.9.6 Wrap mark followed by an IBG 48
13.9.7 IBG followed by a VOLID mark ONE or ZERO 48
13.9.8 VOLID mark ONE or ZERO followed by an IBG 48
13.9.9 Summary of the relationship between interblock gaps, erase gaps, tape marks, and wrap marks 49

13.10 End of Data Block 49
13.11 Recording Area 50

Annexes

A - Tape abrasivity measurement procedure 52

B - Pre-recording condition 55

C - Representation of 8-bit bytes by 9-bit patterns 56

D - Measurement of bit shift 59

E - Implementation of a CRC 61

F - Calculation of a physical position indicator 62

G - Media Type Label 63

H - Recommendations for transportation 67

J - Inhibitor cartridge 68

K - Recommendations on tape durability 69

L - Summary of data flow 70

M - Accelerated life test 71

Copyright International Organization for Standardization
Provided by IHS under license with ISO
No reproduction or networking permitted without license from IHS Not for Resale

Foreword

ISO (the International Organization for Standardization) and IEC (the International Electrotechnical Commission) form the specialized system for worldwide standardization. National bodies that are members of ISO or IEC participate in the development of International Standards through technical committees established by the respective organization to deal with particular fields of technical activity. ISO and IEC technical committees collaborate in fields of mutual interest. Other international organizations, governmental and non-governmental, in liaison with ISO and IEC, also take part in the work.

In the field of information technology, ISO and IEC have established a joint technical committee, ISO/IEC JTC 1. Draft International Standards adopted by the joint technical committee are circulated to national bodies for voting. Publication as an International Standard requires approval by at least 75 % of the national bodies casting a vote.

International Standard ISO/IEC 14251 was prepared by the European Computer Manufacturers Association (as Standard ECMA-196) and was adopted, under a special "fast-track procedure", by Joint Technical Committee ISO/IEC JTC 1, *Information technology*, in parallel with its approval by national bodies of ISO and IEC.

Annexes A to G form an integral part of this International Standard. Annexes H to M are for information only.

Copyright International Organization for Standardization
Provided by IHS under license with ISO
No reproduction or networking permitted without license from IHS
Not for Resale

Introduction

The following International Standards specify data interchange on 12,7 mm wide magnetic tape cartridges:

ISO/IEC 9661: 1994, *Information technology - Data interchange on 12,7 mm wide magnetic tape cartridges - 18 tracks, 1 491 bytes per millimetre*

ISO/IEC 11559: 1993, *Information technology - Data interchange on 12,7 mm wide 18- track magnetic tape cartridges Extended format*

ISO/IEC 13421: 1993, *Information technology - Data interchange on 12,7 mm, 48-track magnetic tape cartridges - DLT 1 format*

ISO/IEC 13962: 1995, *Information technology - Data interchange on 12,7 mm, 112-track magnetic tape cartridges - DLT 2 format*

This International Standard is related to further developments of cartridges containing 12,7 mm magnetic tape. It incorporates most of the requirements of ISO/IEC 11559, together with extensions and modifications which specify the additional features that allow higher capacities to be achieved.

Two types of cartridge are defined within this International Standard. For one of the types, the requirements for the case and the tape are identical with those in ISO/IEC 11559. The second type conforms to different requirements which are defined in this International Standard. This International Standard also specifies a recording method and format for use with either type.

It is not intended that this International Standard replaces ISO/IEC 11559. Existing cartridges which conform to ISO/IEC 11559 will continue to do so and will not conform to all the requirements of this International Standard. Drives which write and read according to this International Standard may have the ability to accept and read cartridges conforming to ISO/IEC 9661 or ISO/IEC 11559.

--`,,```,,,,````-`-`,,`,,`,`,,`---

Copyright International Organization for Standardization
Provided by IHS under license with ISO
No reproduction or networking permitted without license from IHS

Not for Resale

Information technology - Data interchange on 12,7 mm 36-track magnetic tape cartridges

Section 1 - General

1 Scope

This International Standard specifies the physical and magnetic characteristics of 12,7 mm wide, 36-track magnetic tape cartridges to enable interchangeability of such cartridges. It also specifies the quality of the recorded signals, the format and the recording method, thus allowing, together with International Standard ISO 1001 or equivalent, full data interchange by means of such magnetic tape cartridges.

This International Standard specifies two types of cartridge which, for the purposes of this International Standard, are referred to as Cartridge System Tape (CST) and Extended Capacity Cartridge System Tape (ECCST), and contain tape of different thicknesses and lengths.

CST cartridges have a nominal uncompressed capacity of approximately 400 Mbytes.

ECCST cartridges have a nominal uncompressed capacity of approximately 800 Mbytes.

This International Standard specifies extensions and modifications to the recorded format that is described in International Standard ISO/IEC 11559.

These extensions and modifications

increase the number of tracks recorded on the tape from 18 to 36. Actual recordings will be made 18 tracks at a time requiring two complete passes of the tape, one from the beginning of tape to the end of tape and the other from the end of tape to the beginning of tape;

specify a different method of defining the ECC characters used to detect and correct errors when the data is read from the tape.

2 Conformance

2.1 Magnetic tape cartridge

A magnetic tape cartridge is in conformance with this International Standard if:

the cartridge meets all the requirements of clauses 6 to 8 for either one of the two types of magnetic tape cartridge;

the recording on the tape meets the requirements of clauses 9 to 13;

for each recorded packet the algorithm used for processing the data therein, if Processed Data has been recorded, is defined and the identification is included in Byte 13 of the Packet ID of this packet (see 11.2). This identification shall conform to ISO/IEC 11576.

2.2 Generating system

A system generating a magnetic tape cartridge for interchange shall be entitled to claim conformance with this International Standard if all the recordings that it makes on a tape meet the mandatory requirements of this International Standard. A claim of conformance shall state which types of magnetic tape cartridges it is capable of recording, whether or not one, or more, registered algorithms are implemented and, if so, the registered identifiers of all implemented algorithms. It shall also state whether it is capable of generating the optional VOLID Mark information.

2.3 Receiving system

A system receiving a magnetic tape cartridge for interchange shall be entitled to claim conformance with this International Standard if it is able to handle any recording made on the tape according to this International Standard and specifies which of the two types of magnetic tape cartridges it is capable of reading. In particular it shall

be able to retrieve data from individual packets within the extended blocks;

be able to recognize that the data has been processed, to identify the algorithm(s) used, restore the data to its original form or to indicate to the host that it cannot do so;

A claim of conformance shall state whether or not one, or more, registered algorithm(s) is (are) implemented and, if so, the registered identifier(s) of all implemented algorithms. It shall also state whether it is capable of using the optional VOLID Mark information.

Copyright International Organization for Standardization
Provided by IHS under license with ISO
No reproduction or networking permitted without license from IHS
Not for Resale

3 Normative references

The following standards contain provisions which, through reference in this text, constitute provisions of this International Standard. At the time of publication, the editions indicated were valid. All standards are subject to revision, and parties to agreements based on this International Standard are encouraged to investigate the possibility of applying the most recent editions of the standards indicated below. Members of IEC and ISO maintain registers of currently valid International Standards.

ISO/IEC 646: 1991,	*Information technology - ISO 7-bit coded character set for information interchange.*
ISO 683-13: 1986,	*Heat-treatable steels, alloy steels and free-cutting steels - Part 13: Wrought stainless steels.*
ISO 1001: 1986,	*Information processing - File structure and labelling of magnetic tapes for information interchange.*
ISO 1302: 1992,	*Technical drawings - Method of indicating surface texture.*
ISO/IEC 11576:1994,	*Information technology - Procedure for the registration of algorithms for the lossless compression of data.*

4 Definitions

For the purposes of this International Standard, the following definitions apply.

4.1 algorithm: A set of rules for transforming the logical representation of data.

4.2 algorithmically Processed Data: Data which has been processed by a defined processing algorithm.

4.3 Beginning of Tape (BOT): The point along the length of the magnetic tape, indicated by the start of recorded information.

4.4 byte: An ordered set of eight bits (9 encoded bits) that are acted upon as a unit.

4.5 Cyclic Redundancy Check (CRC) character: A character represented by two bytes, placed at the end of a byte string and used for error detection.

4.6 Data Records

4.6.1 Processed Data Record (PDR): The data entity resulting from the application of an algorithm to the Logical Data Record.

4.6.2 Host Data Record: The data entity originally compiled by the host.

4.6.3 Logical Data Record (LDR): The data entity received by the system from the host. It may contain one or several Host Data Record(s) depending upon action taken by the host to use extended blocks.

4.6.4 User Data Record (UDR): The data entity available to the Packet Former.

When the data has been processed it shall be a PDR.
When the data has not been processed it shall be a LDR.

4.7 End of Tape (EOT): The point on the tape furthest from BOT up to which recording is allowed.

4.8 Error correcting code (ECC): A mathematical procedure yielding bits used for the detection and correction of errors.

4.9 flux transition position: The point on the magnetic tape that exhibits the maximum free-space flux density normal to the tape surface.

4.10 flux transition spacing: The distance along a track between successive flux transitions.

4.11 Frame: A section across all 18 tracks within a Half-Wrap containing logically related bytes.

4.12 logical backwards: The direction of tape motion that results in finding a descending order of LDRs.

4.13 logical forwards: The direction of tape motion that results in finding an ascending order of LDRs.

4.14 magnetic tape: A tape that accepts and retains magnetic signals intended for input, output, and storage of data for information processing.

4.15 Master Standard Reference Tape: A tape selected as the International Standard for Reference Field, Signal Amplitude, Resolution, and Overwrite.

NOTE 1 - A Master Standard Reference Tape has been established at the US National Institute of Standards and Technology (NIST).

Copyright International Organization for Standardization
Provided by IHS under license with ISO
No reproduction or networking permitted without license from IHS
Not for Resale

4.16 packet: A UDR with a Packet ID and Packet Trailer added.

4.17 Pad byte: A byte having a bit pattern consisting of eight ZEROs.

4.18 physical backward: The direction of tape motion from EOT to BOT. This will be logical forward for Half-Wrap 2.

4.19 physical forward: The direction of tape motion from BOT to EOT. This will be logical forward for Half-Wrap 1.

4.20 physical recording density: The number of recorded flux transitions per unit length of track, e.g. flux transitions per millimetre (ftpmm).

4.21 Processed Data: Data which has been processed by an algorithm.

4.22 Secondary Standard Reference Tape: A tape the performance of which is known and stated in relation to that of the Master Standard Reference Tape.

NOTE 2 - Secondary Standard Reference Tapes, SRM 3202, have been developed at the National Institute for Standards and Technology (NIST) and are available from the NIST Office of Standard Reference Materials, Room B311, Chemistry Building, National Institute for Standards and Technology, Gaithersburg, Maryland USA 20899 until the year 2004.
It is intended that these be used for calibrating tertiary reference tapes for use in routine calibration.

4.23 Standard Reference Amplitude (SRA): The Average Signal Amplitude from the Master Secondary Reference Tape when it is recorded with the Test Recording Current on the NIST measurement system at 972 ftpmm.

Traceability to the Standard Reference Amplitude is provided by the calibration factors supplied with each Secondary Reference Tape.

4.24 Standard Reference Current: The current that produces the Reference Field.

4.25 Tape Reference Edge: The Reference Edge of the tape is the bottom edge when viewing the recording side of the tape with the hub end (EOT) of the tape to the observer's right.

4.26 Test Recording Current: The current that is 1,5 times the Standard Reference Current.

4.27 track: A longitudinal area on the tape along which a series of magnetic signals can be recorded.

4.28 Typical Field: In the plot of the Average Signal Amplitude against the Recording Field at the physical recording density of 972 ftpmm, the minimum field that causes an Average Signal Amplitude equal to 85 % of the maximum Average Signal Amplitude.

4.29 transformation: The manipulation of Host Data Records before formatting. It includes the operations of processing, the formation of packets and the concatenation of packets.

4.30 Wrap: A set of 36 tracks, 18 of which are recorded from BOT to EOT and 18 of which are recorded from EOT to BOT in a sequential manner.

4.31 Half-Wrap: A set of 18 tracks which are recorded concurrently in the same direction. The tape contains two Half-Wraps; Half-Wrap 1 is recorded from BOT towards EOT and Half-Wrap 2 is recorded from EOT towards End of Volume (EOV).

5 Conventions and notations

5.1 Representation of numbers

The following conventions and notations apply in this International Standard, unless otherwise stated.

- In each field the bytes shall be arranged with Byte 1, the most significant, first. Within each byte the bits shall be arranged with Bit 1, the most significant, first and Bit 8, the least significant bit, last. This order applies to the data, and to the input and output of the error correcting codes and cyclic redundancy codes.
- Letters and digits in parentheses represent numbers in hexadecimal notation.
- The setting of binary bits is denoted by ZERO or ONE.
- Numbers in binary notation and bit combinations are represented by strings of ZEROs and ONEs with the most significant bit to the left.

5.2 Names

The names of entities are given with a capital initial letter.

Copyright International Organization for Standardization
Provided by IHS under license with ISO
No reproduction or networking permitted without license from IHS
Not for Resale

5.3 Acronyms

BDM	Beginning of Data Mark
BOT	Beginning of Tape
CRC	Cyclic Redundancy Check
CST	Cartridge System Tape
ECC	Error Correction Code
ECCST	Extended Capacity Cartridge System Tape
EDM	End of Data Mark
EOT	End of Tape
EOV	End of Volume
IBG	Interblock Gap
ID	Identifier or Identification
LDR	Logical Data Record
NB-SNR	Narrow Band Signal-to-Noise Ratio
PDR	Processed Data Record
RBW	Resolution Bandwidth
SRA	Standard Reference Amplitude
UDR	User Data Record
VBW	Video Band Width

6 Environment and safety

Unless otherwise stated, the conditions specified below refer to the ambient conditions in the test or computer room and not to those within the tape equipment.

6.1 Cartridge/tape testing environment

Unless otherwise stated, tests and measurements made on the tape cartridge to check the requirements of this International Standard shall be carried out under the following conditions

temperature: 23 °C ± 2 °C

relative humidity: 40 % to 60 %

conditioning period before testing: 24 h

6.2 Cartridge operating environment

Cartridges used for data interchange shall be capable of operating under the following conditions

temperature: 16 °C to 32 °C

relative humidity: 20 % to 80 %

wet bulb temperature: 25 °C max.

The average temperature of the air immediately surrounding the tape shall not exceed 40,5 °C.

NOTE 3 - Localized tape temperatures in excess of 49 °C may cause tape damage.

Conditioning before operating: If a cartridge has been exposed during storage and/or transportation to conditions outside the above values, it shall be conditioned for a period of at least 24 h prior to use.

6.3 Cartridge storage environment

Cartridges used for data interchange shall be stored under the following conditions.

temperature: 5 °C to 32 °C

relative humidity: 5 % to 80 %

wet bulb temperature: 26 °C max.

Copyright International Organization for Standardization
Provided by IHS under license with ISO
No reproduction or networking permitted without license from IHS Not for Resale

6.4 Safety requirements

6.4.1 Safeness

The cartridge and its components shall not constitute any safety or health hazard when used in its intended manner or in any foreseeable misuse in an information processing system.

6.4.2 Flammability

The cartridge and its components shall be made from materials which, if ignited from a match flame, do not continue to burn in a still carbon dioxide atmosphere.

6.5 Transportation

This International Standard does not specify parameters for the environment in which cartridges should be transported. Annex H gives some recommendations for transportation.

Section 2 - Characteristics of the tapes

7 Characteristics of the tapes

There are two types of tapes specified by this International Standard. The tape used in an ECCST cartridge is longer and thinner than that used in a CST cartridge. ECCST cartridges are differentiated from CST cartridges by the larger tape circumference when the tape is completely wound on the supply reel and by the two coloured cartridge case. Where there are differences between the two cartridges, they are denoted in this International Standard.

7.1 Material

The tape shall consist of a base material (oriented polyethylene terephthalate film or its equivalent) coated on one side with a strong yet flexible layer of ferromagnetic material dispersed in a suitable binder. The back surface of CST tape may also be coated with a ferromagnetic or non-ferromagnetic material. ECCST tape shall not be coated on the back surface.

7.2 Tape length

The minimum length of the tape shall be

For CST tape: 165 m

For ECCST tape: 332 m

7.3 Tape width

The width of tape shall be

For CST tape: 12,650 mm ± 0,025 mm
For ECCST tape: 12,570 mm ± 0,025 mm

The width shall be measured across the tape from edge-to-edge when the tape is under a tension of less than 0,28 N.

7.4 Tape discontinuity

There shall be no discontinuities in the tape such as those produced by tape splicing or perforations.

7.5 Total thickness of tape

The total thickness of the tape shall be in the following ranges

For CST tape: 0,025 9 mm to 0,033 7 mm
For ECCST tape: 0,016 1 mm to 0,018 0 mm

7.6 Base material thickness

The nominal thickness of the base material for the tape shall be

For CST tape: 0,023 4 mm
For ECCST tape: 0,014 2 mm

Copyright International Organization for Standardization
Provided by IHS under license with ISO
No reproduction or networking permitted without license from IHS Not for Resale

7.7 Longitudinal curvature

7.7.1 CST tape

The radius of curvature of the edge of the CST tape shall not be less than 33 m.

Procedure:

Allow a 1 m length of tape to unroll and assume its natural curvature on a flat smooth surface. Measure the maximum deviation from the concave edge of the tape to its chord. The deviation shall not be greater than 3,8 mm. This deviation corresponds to the minimum radius of 33 m if measured over an arc of circle.

7.7.2 ECCST tape

The radius of curvature of the edge of the ECCST tape shall not be less than 33,75 m.

Procedure:

Allow a 0,90 m length of tape to unroll and assume its natural curvature on a flat smooth surface. Measure the maximum deviation from the concave edge of the tape to its chord. The deviation shall not be greater than 3,0 mm. This deviation corresponds to the minimum radius of 33,75 m if measured over an arc of circle.

7.8 Out-of-plane distortions

All visual evidence of out-of-plane distortion shall be removed when the tape is subjected to the uniform tension specified below. Out-of-plane distortions are local deformations which cause portions of the tape to deviate from the plane of the surface of the tape. Out-of-plane distortions are most readily observed when the tape is lying on a flat surface under no tension.

For CST tape: 0,6 N
For ECCST tape: 0,4 N

7.9 Cupping

The departure across the width of tape from a flat surface shall not exceed 0,3 mm.

Procedure:

Cut a 1,0 m ± 0,1 m length of tape. Condition it for a minimum of 3 h in the test environment by hanging it so that the surfaces are freely exposed to the test environment. From the centre portion of the conditioned tape cut a test piece of 25 mm length. Stand the test piece on its end in a cylinder which is at least 25 mm high with an inside diameter of 13,0 mm ± 0,2 mm. With the cylinder standing on an optical comparator measure the cupping by aligning the edges of the test piece to the reticle and determining the distance from the aligned edges to the corresponding surface of the test piece at its centre.

7.10 Dynamic frictional characteristics

In the tests of 7.10.1 and 7.10.2 the specified forces of 1,0 N and 1,50 N, respectively, comprise both the force component of the dynamic friction and the force of 0,64 N applied to the test piece of tape.

NOTE 4 - Particular attention should be given to keeping the surfaces clean.

7.10.1 Frictional drag between the recording surface and the back surface

The force required to move the recording surface in relation to the back surface shall not be less than 1,0 N.

Procedure:

a) Wrap a test piece of tape around a 25,4 mm diameter circular mandrel with the back surface of the test piece facing outwards in such a manner that the test piece will not slide.

b) Place a second test piece of the same type of tape, with the recording surface facing inwards, around the first test piece for a total wrap angle of 90°.

c) Apply a force of 0,64 N to one end of the outer test piece. Secure its other end to a force gauge which is mounted on a motorized linear slide.

d) Drive the slide at a speed of 1 mm/s.

7.10.2 Frictional drag between the tape recording surface and ferrite after environmental cycling

The force required to move the tape at a point 1,34 m from the leader block of the cartridge shall not be greater than 1,5 N. The force required at a point 4,3 m from the junction of the tape with the cartridge hub shall not exceed 6,0 N.

Copyright International Organization for Standardization
Provided by IHS under license with ISO
No reproduction or networking permitted without license from IHS Not for Resale

Procedure:

a) Wind tape on to a spool hub of diameter 50 mm to an outside diameter of 97 mm with a winding tension of 2,2 N ± 0,2 N for CST tape and 1,8 N ± 0,2 N for ECCST tape.

b) Repeat the following two steps five times:

   - Store for 48 h at a temperature of 50 °C and a relative humidity of 10 % to 20 %.
   - Condition in the testing environment for 2 h and rewind with a tension of 2,2 N ± 0,2 N for CST tape and 1,8 N ± 0,2 N for ECCST tape.

c) Condition the tape for 48 h at a temperature of 30,5 °C and a relative humidity of 85 %. The tape shall remain in this environment for steps d) and e).

d) Apply a force of 0,64 N to one end of a test piece of not more than 1 m, taken 1,34 m from the leader block. Pass the test piece over a ferrite rod of diameter 25,4 mm with the recording surface in contact with the rod for a total wrap angle of 90°.

   The rod shall be made from the ferrite specified in annex A. It shall be polished to a roughness value Ra of 0,05 µm (roughness grade N2, ISO 1302). Pull the other end of the test piece horizontally at 1 mm/s.

e) Repeat step d) for a similar test piece taken 4,3 m from the junction of the tape with the cartridge hub.

7.11 Coating adhesion

The force required to peel any part of the coating from the tape base material shall not be less than 1,5 N.

Procedure:

a) Take a test piece of the tape approximately 380 mm long and scribe a line through the recording coating across the width of the tape 125 mm from one end.

b) Using a double-sided pressure sensitive tape, attach the full width of the test piece to a smooth metal plate, with the recording surface facing the plate, as shown in figure 1.

c) Fold the test piece over 180°, attach the metal plate and the free end of the test piece to the jaws of a universal testing machine and set the speed of the jaw separation to 254 mm per m.

d) Note the force at which any part of the coating first separates from the base material. If this is less than 1,5 N, the test has failed. If the test piece peels away from the double-sided pressure sensitive tape before the force exceeds 1,5 N, an alternative type of double-sided pressure sensitive tape shall be used.

e) If the back surface of the tape is coated, repeat a) to d) for the back coating.

Copyright International Organization for Standardization
Provided by IHS under license with ISO
No reproduction or networking permitted without license from IHS
Not for Resale

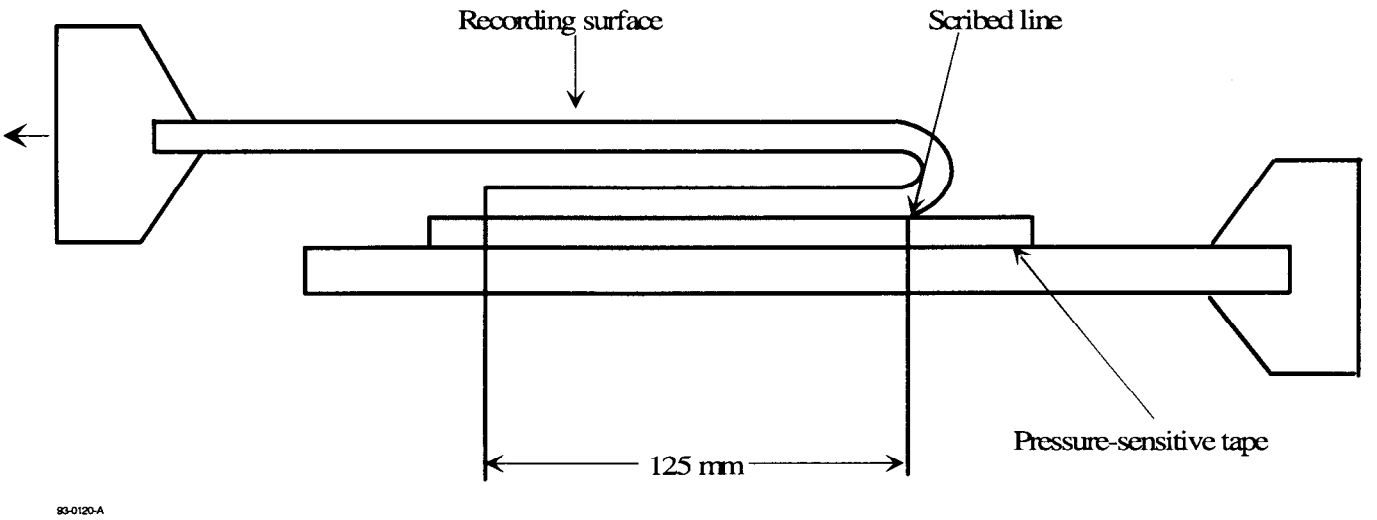

Figure 1 - Coating adhesion test

7.12 Flexural rigidity

The flexural rigidity of the tape in the longitudinal direction shall be

For CST tape	0,06 to 0,16 N·mm^2
For ECCST tape	0,03 to 0,14 N·mm^2

Procedure:

Clamp a 180 mm test piece of tape in a universal testing machine, allowing a 100 mm separation between the machine jaws. Set the jaw separation speed at 5 mm per minute. Plot force against distance. Calculate the flexural rigidity using the slope of the curve between 2,2 N and 6,7 N by the formula

$$E = \frac{\Delta F / WT}{\Delta L / L}$$

$$I = \frac{WT^3}{12}$$

Flexural rigidity = EI

Where

ΔF is the change in force in Newtons

T is the measured thickness in millimetres

W is the measured width in millimetres

$\Delta L/L$ is the change in the length of the test piece between the jaws divided by the original length between the jaws.

7.13 Electrical resistance of coated surfaces

The electrical resistance of any square area of the recording surface shall be within the range

- 105Ω to 5 x 108Ω for non-backcoated tapes.
- 105Ω to 5 x 109Ω for backcoated tapes.

The electrical resistance of any backcoating shall be less than $10^6\Omega$.

Procedure:

Condition a test piece of tape to the test environment for 24 h. Position the test piece over two 24-carat gold-plated, semi-circular electrodes having a radius r = 25,4 mm and a finish of at least N4 such that the recording surface is in contact with each

Copyright International Organization for Standardization
Provided by IHS under license with ISO
No reproduction or networking permitted without license from IHS Not for Resale

electrode. These electrodes shall be placed parallel to the ground and parallel to each other at a distance d = 12,7 mm between their centres as shown in figure 2. Apply a force F of 1,62 N to each end of the test piece. Apply a DC voltage of 500 V ± 10 V across the electrodes and measure the resulting current flow. From this value, determine the electrical resistance.

Repeat for a total of five positions along the test piece and average the five resistance readings. For back-coated tape repeat the procedure with the backcoating in contact with electrodes.

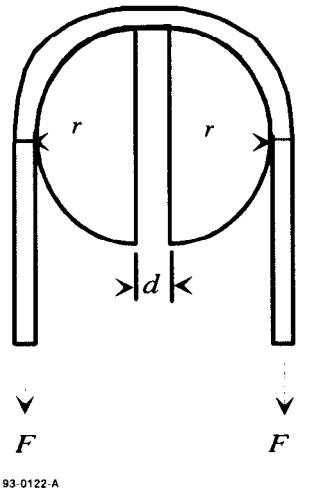

Figure 2 - Electrical resistance test

When mounting the test piece, make sure that no conducting paths exist between the electrodes except that through the coating under test.

NOTE 5 - Particular attention should be given to keeping the surfaces clean.

7.14 Tape durability

This International Standard does not specify parameters for assessing tape durability. However, a recommended procedure is described in annex K.

7.15 Inhibitor tape

This International Standard does not specify parameters for assessing whether or not a tape is an inhibitor tape. However, annex J gives further information on inhibitor tapes.

7.16 Tape abrasivity

Tape abrasivity is the tendency of the tape to wear the tape transport and head. The length of the wear pattern on a wear bar shall not exceed 56 µm when measured as specified in annex A.

7.17 Accelerated life test

This International Standard does not specify parameters for assessing whether or not a tape withstands long-term storage and extreme environmental operating conditions. However, a recommended procedure is described in annex M.

7.18 Data integrity test

The object of the data integrity test is to demonstrate that the tape will withstand continued tape movement in the drive within the environmentally stressed operating conditions without loss of recorded data. Data is written in the forward direction between BOT and EOT, and then the tape is moved multiple passes the full operating length, after which the data is re-read to check for the generation of errors.

7.18.1 Requirement

There shall be no more than eight additional temporary read errors on any read pass. There shall be no generation of permanent read errors.

7.18.2 Procedure

a) Allow cartridges to acclimatize at room temperature and re-tension the tape by driving it one time back and forth between the BOT and EOT to remove any loose wraps.

Copyright International Organization for Standardization
Provided by IHS under license with ISO
No reproduction or networking permitted without license from IHS
Not for Resale

b) Place the test hardware and cartridge to be tested in a 30,0 °C ± 2,0°, 85 % rh environment for 24 h.

c) Write Data Blocks containing 32K bytes each on the cartridge from BOT to EOT in the forward direction only. Read the data while writing and save the error information.

d) File-Protect the cartridge.

e) From EOT backup the tape 50 Data Blocks and note the Block ID.

f) Run high-speed passes at 4 m/s to 5 m/s to the Block ID noted in step e). Then do a high-speed rewind to BOT. Repeat this high-speed pass 50 times.

g) Read the data from the entire tape and save the error information.

h) Repeat steps f) and g) 4 times for a total of 250 high-speed passes from BOT to the noted Block ID and back to BOT and 5 full length read passes. Save the error information for comparison against the original error information.

i) Compare the read data results for all five read passes against the original data of step c).

7.19 Pre-recording condition

Prior to recording data for testing purposes, or to testing, erase the tape utilizing alternating magnetic fields of decaying levels (anhysteretic process) to ensure that the remanent magnetic moment of the recording surface does not exceed 20 % of the maximum remanent magnetic moment. Annex B specifies the method of measurement.

In addition, no low density transitions shall be present on the tape and the tape shall have been erased prior to the first time it was used for recording.

7.20 Magnetic recording characteristics

The magnetic recording characteristics shall be defined by the testing requirements given below.

When performing these tests, the output or resultant signal shall be measured on the same relative pass for both a tape calibrated to the Master Standard Reference Tape and the tape under test (read-while-write or first forward-read-pass) on the same equipment.

The following conditions shall apply to the testing of all magnetic recording characteristics, unless otherwise noted.

- tape condition: pre-recording condition
- tape speed: not greater than 2,5 m/s
- read track: within the written track
- azimuth alignment: not greater than 6' between the mean write transitions and the read gap
- write gap length: 1,0 µm ± 0,2 µm
- write head saturation density: 0,34 T ± 0,03 T
- tape tension
  - CST tape: 2,2 N ± 0,2 N
  - ECCST tape: 1,8 N ± 0,2 N
- recording current: Test Recording Current

7.20.1 Typical field

The Typical Field of the tape shall be between 90 % and 110 % of the Reference Field.

Traceability to the Reference Field is provided by the calibration factors supplied with each Secondary Standard Reference Tape.

7.20.2 Signal amplitude

The Average Signal Amplitude at the physical recording density of 972 ftpmm shall be between 70 % and 140 % of the SRA.

Traceability to the SRA is provided by the calibration factors supplied with each Secondary Standard Reference Tape.

7.20.3 Resolution

The ratio of the Average Signal Amplitude at the physical recording density of 1 458 ftpmm to that at the physical recording density of 972 ftpmm shall be between 80 % and 120 % of the same ratio for the Master Standard Reference Tape.

Traceability to the resolution of the Master Standard Reference Tape is provided by the calibration factors supplied with each Secondary Standard Reference Tape.

Copyright International Organization for Standardization
Provided by IHS under license with ISO
No reproduction or networking permitted without license from IHS
Not for Resale

7.20.4 Overwrite

Overwrite is the ratio of the Average Signal Amplitude of the residual of the fundamental frequency of a tone pattern after being overwritten at 972 ftpmm to the Average Signal Amplitude of the 972 ftpmm signal. The Average Signal Amplitude of the tone pattern is the peak-to-peak amplitude of the sinusoidal signal with equal rms power.

7.20.4.1 Requirement

The overwrite for the tape shall be less than 120 % of the overwrite for the Master Standard Reference Tape.
Traceability to the overwrite of the Master Standard Reference Tape is provided by the calibration factors supplied with each Secondary Standard Reference Tape.

7.20.4.2 Procedure:

Record a tone pattern which shall be the following sequence of flux transitions.

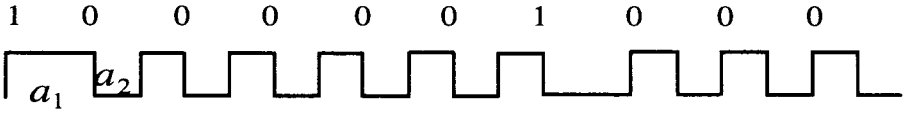

95-0009-A

where $a_1 = 1{,}029\ \mu m$
$a_2 = 0{,}514\ \mu m$

Figure 3 - Tone Pattern

Record a 972 ftpmm signal over the tone pattern. Measure the Average Signal Amplitude of the residual of the fundamental frequency of the tone pattern (one sixth of the frequency of the 972 ftpmm signal) and the Average Signal Amplitude of the 972 ftpmm signal. Both amplitude measurements shall be made using suitable filters.

7.20.5 Narrow-band signal-to-noise ratio (NB-SNR)

The narrow-band signal-to-noise ratio is the Average Signal Amplitude rms power divided by the average integrated (side band) rms noise power, and is expressed decibels.

7.20.5.1 Requirement

The NB-SNR shall be equal to, or greater than, 30 dB when normalized to a track width of 410 µm. The normalization factor is $dB(410) = dB(W) + 10 \log 410/W$, where W is the track width used when measuring $dB(W)$.

7.20.5.2 Procedure

The NB-SNR shall be measured using a spectrum analyzer with a resolution bandwidth (RBW) of 1 kHz and a video bandwidth (VBW) of 10 Hz. The tape speed shall be 762 mm/s for the frequencies specified below.

The NB-SNR shall be measured as follows

- Measure the read-signal amplitude of the 972 ftpmm signal, taking a minimum of 150 samples over a minimum length of tape of 46 m.
- On the next pass (read only) measure the rms noise power over the same section of tape and integrate the rms noise power (normalizing for the actual resolution bandwidth) over the range from 332 kHz to 366 kHz.

For other tape speeds all frequencies shall be linearly scaled.

7.21 Tape quality

The tape quality (including the effects of exposure to storage and transportation environments) is defined by the testing requirements given in the following clauses. The following conditions shall apply to all quality testing requirements.

- environment: operating environment
- tape condition: pre-recording condition
- tape speed: 2 m/s
- write track width: greater than, or equal, to the read track width
- read track width : 190 µm ± 2,5 µm
- physical recording density: 972 ftpmm
- write gap length : 1,0 µm ± 0,2 µm

Copyright International Organization for Standardization
Provided by IHS under license with ISO
No reproduction or networking permitted without license from IHS
Not for Resale

- azimuth alignment : not greater than 6' between the mean write transitions and the read gap
- write head saturation density: 0,34 T ± 0,03 T
- recording current: Test Recording Current
- format: 36 tracks
- tape tension
  - CST tape: 2,2 N ± 0,2 N
  - ECCST tape: 1,8 N ± 0,2 N

7.21.1 Missing pulses

A missing pulse is a loss of read signal amplitude. A missing pulse exists when the base-to-peak read signal amplitude is 25 %, or less, of half the Average Signal Amplitude for the preceding 25,4 mm of tape.

7.21.2 Missing pulse zones

A Missing Pulse Zone begins with a missing pulse and ends when 64 consecutive flux transitions, which are not missing pulses, are detected or a length of 1 mm of tape has been measured.

The Missing Pulse Zone rate shall be less than one in 8×10^6 flux transitions recorded.

7.21.3 Coincident Missing Pulse Zones

For purposes of measuring Coincident Missing Pulse Zones, the 36 tracks are divided into four 9-track groups as shown below. A simultaneous Missing Pulse Zone condition on two or more tracks of a 9-track group is a Coincident Missing Pulse Zone.

The first group shall comprise physical tracks 1, 5, 9, 13, 17, 21, 25, 29, and 33.

The second group shall comprise physical tracks 3, 7, 11, 15, 19, 23, 27, 31, and 35.

The third group shall comprise physical tracks 2, 6, 10, 14, 18, 22, 26, 30, and 34.

The fourth group shall comprise physical tracks 4, 8, 12, 16, 20, 24, 28, 32, and 36.

If a Coincident Missing Pulse Zone occurs at the same time in the first and second group of tracks and the third or fourth group of tracks, it shall be considered as a single Coincident Missing Pulse Zone. Its length shall begin with the start of the earliest Coincident Missing Pulse Zone and terminate with the end of the latest Coincident Missing Pulse Zone.

No tape shall have more than 12 Coincident Missing Pulse Zones.

No Coincident Missing Pulse Zone shall exceed 50 mm.

Section 3 - Cartridge

8 Dimensional and mechanical characteristics of the cartridge

The two cartridges defined by this International Standard, the CST and the ECCST, are very similar in their dimensional and mechanical characteristics. Requirements in this section shall apply to both types unless a specific difference is noted.

The cartridges shall consist of the following elements:

- a case,
- a reel for the magnetic tape,
- a magnetic tape wound on the hub of the reel,
- a locking mechanism for the reel,
- a write-inhibit mechanism,
- a leader block,
- a latching mechanism for the leader block.

Dimensional characteristics are specified for those parameters deemed mandatory for interchange and compatible use of the cartridge. Where there is freedom of design, only the functional characteristics of the elements described are indicated. In the enclosed drawings a typical implementation is represented in third angle projection. Figures 4 to 20 show a typical implementation.

Where they are purely descriptive, the dimensions are referred to three Reference Surfaces A, B, and C forming a geometrical trihedral (see figure 4). Where the dimensions are related to the position of the cartridge in the drive, they may be referred to another surface of the cartridge. Figures 4 to 14 show the dimensions of the empty case.

Copyright International Organization for Standardization
Provided by IHS under license with ISO
No reproduction or networking permitted without license from IHS Not for Resale

Figure 4 is a general view of the whole cartridge.
Figure 5 shows the front side of the case which lies on Reference Surface A.
Figure 6 shows the top side of the case.
Figure 7 shows the rear side of the case.
Figure 8 shows the bottom side of the case which lies in Reference Surface C.
Figure 9 shows the side of the case which lies in Reference Surface B.
Figure 10 shows an enlarged view of a part of figure 5.
Figure 11 shows an enlarged cross-section of a location notch.
Figure 12 shows an enlarged cross-section of a detail of the opening of the case.
Figure 13 shows the bottom side of the case.
Figure 14 shows an enlarged cross-section of the recessed area.
Figure 15 shows an enlarged partial cross-section of the cartridge in hand.
Figure 16 shows the same cross-section as figure 15 but of a cartridge in the drive.
Figure 17 shows schematically the teeth of the toothed rim.
Figure 18 shows two views and an enlarged cross-section of the leader block.
Figure 19 shows the fixation of the tape to the leader block.
Figure 20 shows the leader block inserted in the case.

8.1 Overall dimensions (figure 4)

The overall dimensions of the case shall be

l_1 = 125,00 mm ± 0,32 mm

l_2 = 109,00 mm ± 0,32 mm

l_3 = 24,50 mm $^{+\ 0,50\ mm}_{-\ 0,32\ mm}$

The corners of the case shall be rounded off as specified by

r_1 = 3,00 mm max.

r_2 = 4,00 mm max.

r_3 = 3,00 mm max.

8.2 Write-inhibit mechanism (figures 4 and 5)

The write-inhibit mechanism shall have a flat surface identified by a visual mark, e.g. a white spot, when in the position in which writing is inhibited.

The flat surface shall be accessible through a window in the front side of the case. The location and dimensions of the window are specified by

l_4 = 11,80 mm ± 0,25 mm

l_5 = 15,60 mm ± 0,25 mm

l_6 = 7,40 mm ± 0,25 mm

l_7 = 12,00 mm ± 0,25 mm

In the write-inhibit position the flat surface of the write-inhibit mechanism shall be behind this window at a distance

l_8 = 2,55 mm min.

from the front side of the case.

In the write-enable position this surface shall be within 0,25 mm of the front side of the case.

The force required for the operation of the write-inhibit mechanism shall be in the range

2 N to 9 N

when applied tangentially to the surface of the case.

Copyright International Organization for Standardization
Provided by IHS under license with ISO
No reproduction or networking permitted without license from IHS
Not for Resale

This International Standard does not prescribe the actual implementation of the write-inhibit mechanism. For example, it can be a rotatable or a slidable element. The implementation may require a larger or additional window but shall not impair the integrity of the case against potential contaminants.

8.3 Label area(s) of the rear side (figures 6 and 7)

On the rear side of the case there shall be one or two label areas, provided to hold labels. Either implementation of the cartridge satisfies the requirements of this International Standard.

8.3.1 Implementation of a single label area

The label area shall be specified by

l_9 = 7,00 mm ± 0,25 mm

l_{10} = 80,00 mm $^{+\,0,30\ \text{mm}}_{-\,0,16\ \text{mm}}$

l_{11} = 12,30 mm ± 0,25 mm

l_{12} = 0,50 mm ± 0,25 mm

r_4 = 1,00 mm max.

l_{74}, l_{75}, l_{76} are not specified.

8.3.2 Implementation for two label areas

The label areas shall be specified by

l_9 is not specified

l_{10} = 80,00 mm $^{+\,0,30\ \text{mm}}_{-\,0,16\ \text{mm}}$

l_{11} = 12,30 mm ± 0,25 mm

l_{12} = 0,50 mm ± 0,25 mm

l_{74} = 17,55 mm ± 0,13 mm

l_{75} = 21,97 mm ± 0,25 mm

l_{76} = 2,41 mm ± 0,13 mm

r_4 = 1,00 mm max.

8.4 Label area of the top side (figure 6)

On the top side of the case there shall be a label area, recessed by 0,50 mm ± 0,25 mm, specified by l_9, l_{10}, l_{12} and in addition by

l_{13} = 31,00 mm ± 0,25 mm

l_{14} = 75,00 mm $^{+\,0,30\ \text{mm}}_{-\,0,16\ \text{mm}}$

8.5 Case opening (figures 5, 6 and 10)

The case shall have an opening for the tape in which the leader block can be inserted (see also figure 18). This opening shall be specified by

l_{15} = 4,70 mm ± 0,25 mm

l_{16} = 14,90 mm ± 0,32 mm

l_{17} = 7,50 mm ± 0,25 mm

l_{18} = 87,10 mm ± 0,25 mm

l_{19} = 4,00 mm ± 0,25 mm

r_5 = 4,00 mm ± 0,25 mm

α = 50° ± 1°

Copyright International Organization for Standardization
Provided by IHS under license with ISO
No reproduction or networking permitted without license from IHS Not for Resale

Moreover, figure 10 shows at a larger scale the details of the configuration of the case opening as seen at the right-hand side of figure 5.

l_{61} = 3,4 mm ± 0,5 mm

l_{62} = 16,9 mm ± 0,5 mm

l_{63} = 3,0 mm ± 0,5 mm

l_{64} = 11,6 mm ± 0,5 mm

ω_1 = 1° ± 30'

ω_2 = 20° ± 2°

8.6 Locating notches (figures 8, 9 and 11)

There shall be two locating notches open towards the bottom side. These location notches shall be specified by

l_{20} = 106,00 mm ± 0,25 mm

l_{21} = 5,00 mm ± 0,25 mm

l_{22} = 7,00 mm ± 0,25 mm

l_{23} = 104,00 mm ± 0,25 mm

l_{24} = 2,50 mm ± 0,25 mm

β = 1° 30' ± 30'

γ = 2° 0' ± 30'

8.7 Locating areas (figure 8)

The bottom side of the case shall have three circular locating areas a_1, a_2, and a_3 which shall lie in the same horizontal plane within 0,25 mm.

Areas a_1 and a_2 shall have a diameter of 10,00 mm ± 0,25 mm. The position of their centre shall be specified by

l_{25} = 108,50 mm ± 0,25 mm

l_{26} = 3,50 mm ± 0,25 mm

l_{27} = 105,50 mm ± 0,25 mm

Area a_3 shall have a diameter of 14,00 ± 0,25 mm. The position of its centre shall be specified by

l_{28} = 31,25 mm ± 0,25 mm

l_{29} = 54,50 mm ± 0,25 mm

8.8 Inside configuration of the case around the case opening (figures 8 and 12)

Figures 8 and 12 show the inside configuration of the case around the opening of the case. This configuration shall be defined as follows (see also 8.10)

l_{30} = 3,30 mm ± 0,25 mm

l_{31} = 18,40 mm ± 0,25 mm

r_6 = 1,50 mm ± 0,25 mm

r_7 = 1,50 mm ± 0,25 mm

The oblique edge of the case shall be tangential to the arc of a circle defined by r_6 at an angle

λ = 40° 0' ± 30'

8.9 Other external dimensions of the case (figure 9)

The external form of the case shall be further specified by

l_{32} = 113,2 mm ± 0,3 mm

Copyright International Organization for Standardization
Provided by IHS under license with ISO
No reproduction or networking permitted without license from IHS
Not for Resale

l_{33} = 26,00 mm ± 0,25 mm

r_8 = 145,50 mm ± 0,25 mm

r_9 = 145,50 mm ± 0,25 mm

δ = 30° 0' ± 30'

8.10 Central window (figure 8)

The bottom side of the case shall have a central window. The location of its centre shall be specified by l_{29} and

l_{34} = 61,00 mm ± 0,25 mm

Its diameter shall be

d_1 = 43,5 mm ± 2,0 mm

The angle with its apex at the centre of this window and formed by the two lines tangential to the parts shown in figure 8 in cross-section shall be

θ = 16° 0' ± 30'

8.11 Stacking ribs (figures 7 and 8)

The bottom side of the case shall have two parallel stacking ribs. Their dimensions shall be

l_{35} = 5,00 mm ± 0,25 mm

l_{36} = 1,00 mm ± 0,16 mm

l_{37} = 74,50 mm ± 0,25 mm

Their locations shall be

l_{38} = 31,25 mm ± 0,25 mm

l_{39} = 7,50 mm ± 0,32 mm

l_{40} = 79,50 mm ± 0,25 mm

8.12 Recessed area (figures 13 and 14)

The bottom of the case of the ECCST cartridge shall have a recessed area whose dimensions shall be

l_{67} = 61,50 mm ± 0,25 mm

l_{68} = 5,00 mm ± 0,25 mm

l_{69} = 0,45 mm $^{+\ 0,10\ \text{mm}}_{-\ 0,20\ \text{mm}}$

μ_6 = 2,0° max.

r_{16} = 0,25 mm max.

r_{17} = 0,10 mm max.

Its location shall be defined by l_{20} and, in addition

l_{70} = 16,50 mm ± 0,25 mm

This area is not defined for the CST cartridge.

8.13 Flexibility of the case

The flexibility of the top and bottom sides of the case (see figure 4) is the amount of deflection observed when they are submitted to a perpendicular force f.

8.13.1 Requirements

The amount of deflection d shall meet the following requirements

Deflection of the top side

$0{,}0256\,f \leq d \leq 0{,}38 + 0{,}054\,f$

Copyright International Organization for Standardization
Provided by IHS under license with ISO
No reproduction or networking permitted without license from IHS Not for Resale

Deflection of the bottom side

$0{,}0228\,f \leq d \leq 0{,}38 + 0{,}040\,f$

where

d is the measured deflection in millimetres, and

$4{,}5\ \text{N} \leq f \leq 54{,}0\ \text{N}$

8.13.2 Procedure

The flexibility of the case shall be measured in a universal testing machine operating in the compression mode. Use a suitable load cell for the test. Apply a single point load with a radius of 10 mm ± 1 mm on the bottom and subsequently on the top of the cartridge at the points shown in figure 6 and figure 8, and specified by

l_{65} = 86,9 mm nominal

l_{66} = 54,5 mm nominal

8.14 Tape reel (figures 15 and 16)

Figures 15 and 16 show the tape reel mounted within the case. Figure 15 specifies the different dimensions of the reel when the cartridge is in hand, figure 16 when it is within the drive. For the sake of clarity of the drawing the stacking ribs are not shown in figures 15 and 16.

8.14.1 Locking mechanism (figure 16)

This International Standard does not specify the actual implementation of the locking mechanism. However, functionally it shall satisfy the following requirements in the locked position:

- the angular resolution shall not be greater than 6°;
- the reel shall not rotate by more than 10° when a torque not greater than 0,32 N·m is applied in the direction that will cause the tape to unwind.

The button of the locking mechanism shall be made of nylon 6/6 with 2 % ± 1 % molybdenum disulphide.

Its dimensions shall be

d_9 = 2,0 mm ± 0,5 mm

d_{10} = 10,0 mm ± 0,2 mm

ρ = 15° ± 2°

8.14.2 Axis of rotation of the reel

The axis of rotation of the reel shall be perpendicular to plane P (see figure 17 and 8.14.7) and pass through the centre of the central window as specified by l_{29} and l_{34}.

8.14.3 Metallic insert (figure 15)

The reel shall have a metallic insert made of stainless steel (ISO 683/XIII, type 3 or 7). It shall withstand a pull out force of 300 N min. Its dimensions shall be

$d_2 = 35{,}00\ \text{mm}\ ^{+\,0{,}20\ \text{mm}}_{-\,1{,}20\ \text{mm}}$

d_3 = 11,15 mm ± 0,05 mm

e_1 = 1,51 mm ± 0,10 mm

Its central opening (diameter d_3) shall be concentric with the axis of rotation of the reel within 0,15 mm.

The metallic insert shall be parallel to plane P within 0,15 mm.

8.14.4 Toothed rim (figure 15)

The reel shall have a toothed rim accessible through the central window, and having the dimensions

$d_4 = 36{,}00\ \text{mm}\ ^{+\,0{,}50\ \text{mm}}_{-\,0{,}00\ \text{mm}}$

Copyright International Organization for Standardization
Provided by IHS under license with ISO
No reproduction or networking permitted without license from IHS
Not for Resale

$d_5 = 41{,}00 \text{ mm} \pm 0{,}25 \text{ mm}$

$\psi = 11° 15' \pm 5'$

8.14.5 Hub of the reel (figure 15)

The hub of the reel shall have a diameter

$$d_6 = 50{,}0 \text{ mm} \begin{matrix} +0{,}0 \text{ mm} \\ -0{,}2 \text{ mm} \end{matrix}$$

Further dimensions of the hub shall be

$$l_{41} = 13{,}05 \text{ mm} \begin{matrix} +0{,}20 \text{ mm} \\ -0{,}10 \text{ mm} \end{matrix}$$

when measured at the hub surface, and

$r_{10} = 0{,}08$ mm max.

The hub shall meet the following requirements

- the straightness of the hub surface shall be within 0,04 mm,
- the perpendicularity to the plane P through the pitch line of the teeth of the rim (see 8.14.7) shall be within 0,07 mm,
- the ratio of the difference in the diameters d6 of any two sections (perpendicular to the axis) to the distance between these sections shall not exceed 0,003 8,
- the rate of change across the width of the hub surface shall not exceed 0,025 mm per mm,
- the total runout of the hub related to the cylinder perpendicular to the circular pitch line (see 8.14.7) of the teeth of the toothed rim shall not exceed 0,2 mm total indicator reading.

8.14.6 Relative positions

8.14.6.1 With the cartridge held in the hand (figure 15):

the distance of the tip of the button of the locking mechanism to Reference Surface C shall be

$$l42 = 1{,}90 \text{ mm} \begin{matrix} +1{,}40 \text{ mm} \\ -0{,}90 \text{ mm} \end{matrix}$$

the distance from the bottom surface of the metallic insert to Reference Surface C shall be

$$l43 = 0{,}4 \text{ mm} \begin{matrix} +1{,}0 \text{ mm} \\ -0{,}5 \text{ mm} \end{matrix}$$

8.14.6.2 Whether the cartridge is in the hand or in the drive (figures 15 and 16):

- the distance from the bottom surface of the metallic insert to plane P shall be
  $l44 = 2{,}27 \text{ mm} \pm 0{,}12 \text{ mm}$
- the distance of the inside of the lower flange of the reel to plane P shall be
  $l45 = 0{,}65 \text{ mm} \pm 0{,}09 \text{ mm}$

8.14.6.3 With the cartridge in the drive (figure 16):

- the distance from the tip of the button of the locking mechanism to Reference Surface C shall be
  $l46 = 8{,}1 \text{ mm} \pm 0{,}35 \text{ mm}$
- the force required to move the button into this position shall not exceed 12,25 N,
- the distance from the centreline of the tape to Reference Surface C shall be
  $l47 = 12{,}25$ mm nominal
- the distance from the Reference Surface C to plane P (see 8.14.7) shall be
  $l60 = 5{,}04 \text{ mm} \pm 0{,}25 \text{ mm}$

8.14.7 Characteristics of the toothed rim (figure 17)

The toothed rim shall comprise 60 teeth spaced at an angle of

Copyright International Organization for Standardization
Provided by IHS under license with ISO
No reproduction or networking permitted without license from IHS Not for Resale

6° 0' ± 5' non-cumulative

The teeth are specified at the pitch diameter d_5 by

l_{48} = 4 mm nominal

l_{49} = 2 mm nominal

ϕ = 30° nominal

The pitch line is the circumference of the teeth taken at the distance l_{49}. The plane in which it lies is the plane P mentioned above.

The blend radius at the bottom of the teeth shall be

$r_{11} = 0{,}2\ \text{mm}\ ^{+\,0{,}1\ \text{mm}}_{-\,0{,}0\ \text{mm}}$

The blend radius at the tip of the teeth shall be

r_{12} = 0,25 mm max.

8.15 Leader block (figure 18)

The leader block shall have the following dimensions.

l_{50} = 31,80 mm ± 0,04 mm

l_{51} = 6,8 mm ± 0,1 mm

l_{52} = 21,8 mm ± 0,2 mm

$l_{53} = 10{,}93\ \text{mm}\ ^{+\,0{,}06\ \text{mm}}_{-\,0{,}08\ \text{mm}}$

l_{54} = 5,46 mm ± 0,10 mm

l_{55} = 6,00 mm ± 0,25 mm

$l_{56} = 16{,}5\ \text{mm}\ ^{+\,0{,}0\ \text{mm}}_{-\,0{,}2\ \text{mm}}$

l_{57} = 5,2 mm ± 0,2 mm

r_{13} = 25,00 mm ± 0,25 mm

r_{14} = 1,4 mm ± 0,2 mm

r_{15} = 5,50 mm ± 0,25 mm

d_7 = 7,0 mm ± 0,2 mm

d_8 = 4,0 mm ± 0,2 mm

$\mu_1 = 90° \pm 2°$

$\mu_2 = 8°\ ^{+\,0°}_{-\,3°}$

$\mu_3 = 44°\ ^{+\,0°}_{-\,3°}$

8.16 Attachment of the tape to the leader block (figure 19)

There shall be a cylindrical insert for attaching the tape to the leader block. It shall cover the full width of the tape and not protrude beyond the surfaces of the leader block.

In zone Z the bottom edge of the tape (as seen in figure 19) shall be parallel to the edge of the leader block within 0,12 mm and shall be at a distance

l_{58} = 1,90 mm ± 0,26 mm

Copyright International Organization for Standardization
Provided by IHS under license with ISO
No reproduction or networking permitted without license from IHS
Not for Resale

from it, when measured while the tape is under tension.

When fixed to the leader block the end of the tape shall not protrude above the surface of the leader block by more than

l_{59} = 2,50 mm

The leader block shall remain attached to the tape when a force of 10 N is applied at an angle

$\mu_4 = 38° \pm 2°$

as shown in figure 19.

8.17 Latching mechanism (figure 20)

This International Standard does not specify the actual implementation of the latching mechanism for the leader block. It specifies the position of the leader block and the forces required to pull out and to insert it.

When the leader block is latched into the case, the point defined by l_{51} and l_{54} (see figure 18) shall fall within a circle of radius 0,5 mm max. the centre of which is defined by the intersection of the two lines specified by the nominal values of l_{17} and l_{18} (see figure 6).

The pull-out force, i.e. the force required to pull the leader block and the tape attached to it out of the cartridge shall satisfy both following conditions:

- to be in the range 2,0 N to 7,5 N and
- the product of the maximum value of the pull-out force and the displacement distance shall be less than 13 N·mm.

The insertion force shall be measured at the same angle and jaw separation speed as the pull-out force.

Procedure:

Clamp the cartridge in a universal testing machine that can extract the leader block at the angle μ_5 starting at the pickup point (see figure 20). The leader block pickup point is located by the intersection of the centre lines positioned by dimensions l_{17} and l_{18}. Set the jaw separation speed to 10 mm/min, pull the leader block allowing it to pivot on the pulling pin as it exits the cartridge. Measure the distance between the point where the force first exceeds 0,5 N and the point where the maximum pull-out force is observed. The force shall be measured with a pin that fits into diameters d_7 and d_8 (see figure 18).

The insertion force, i.e. the force required to push the leader block into latched position in the cartridge shall not be greater than 12 N when measured at an angle

$\mu_5 = 48° \pm 3°$

8.18 Tape wind

When the cartridge is viewed from the top, the tape shall be wound counter-clockwise and with the recording surface toward the hub.

8.19 Wind tension

The tape shall be wound with a tension of

For CST tape:	2,2 N ± 0,3 N
For ECCST tape:	1,8 N ± 0,3 N

8.20 Circumference of the tape reel

The CST tape shall be wound to a circumference of between 280 mm and 307 mm.

The ECCST tape shall be wound to a circumference of between 310 mm and 314 mm.

8.21 Moment of inertia

The moment of inertia of the tape reel is the ratio of the torque applied to it (complete with tape, hub and flanges) when it is free to rotate about a given axis to the angular acceleration thus produced about that axis.

The moment of inertia of the reel and tape shall be

- Between 145 x 10-6 kg·m2 and 180 x 10-6 kg·m2 when the circumference is not less than 280 mm and less than 289 mm.
- Between 160 x 10-6 kg·m2 and 195 x 10-6 kg·m2 when the circumference is not less than 289 mm and less than 298 mm.

Copyright International Organization for Standardization
Provided by IHS under license with ISO
No reproduction or networking permitted without license from IHS Not for Resale

- Between 180 x 10-6 kg·m2 and 216 x 10-6 kg·m2 when the circumference is not less than 298 mm and less than 307 mm.
- Between 190 x 10-6 kg·m2 and 240 x 10-6 kg·m2 when the circumference is not less than 310 mm and less than 314 mm.
- The moment of inertia of the empty reel shall be:
- 33,00 x 10-6 kg·m2 ± 3,63 x 10-6 kg·m2.

Procedure:

Torsionally oscillate the reel on an inertial dynamics unit. The oscillation period shall be measured electronically with a universal counter. The oscillation time shall then be converted to its rotational inertial value.

8.22 Cartridge case colours

The bottom part (see figure 4) of the ECCST case shall differ in colour from the upper half of the case to make the ECCST cartridge visibly distinguishable from the cartridge defined in International Standard ISO 9661. The bottom part of the cartridge shall comprise all of the case below a plane parallel to reference surface C. This plane shall be below the end label area defined by l_9 to l_{12} but above reference plane C. The colour shall have the nominal colour and brightness of Macrolon FCR2405-3091.

NOTE 6 - The base colour sample chip, Macrolon FCR2405-3091, is available from:

Mobay Corporation
Mobay Road
Pittsburg, Pa. USA
15205-9741

Copyright International Organization for Standardization
Provided by IHS under license with ISO
No reproduction or networking permitted without license from IHS
Not for Resale

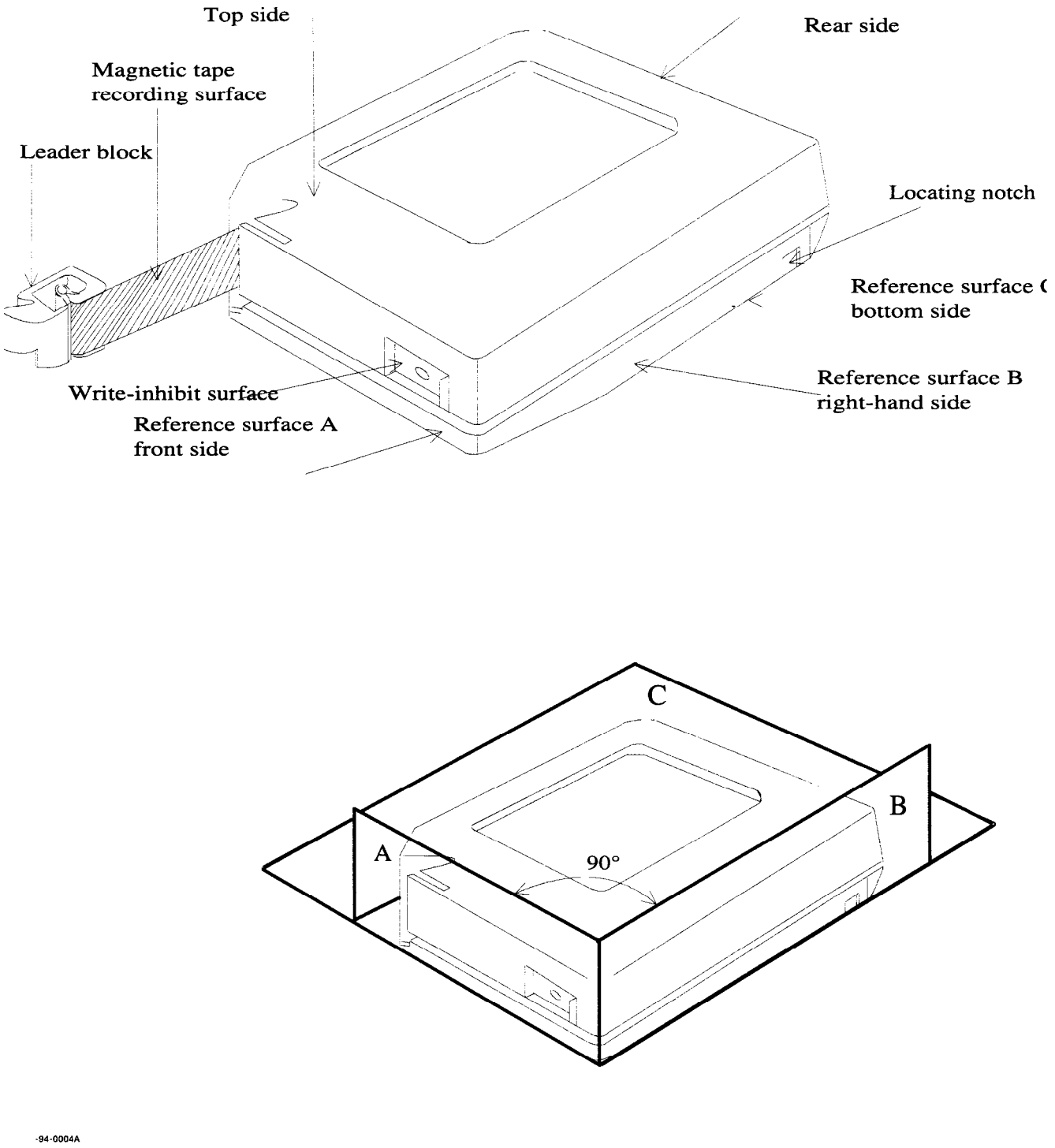

Figure 4 - General view of cartridge

Copyright International Organization for Standardization
Provided by IHS under license with ISO
No reproduction or networking permitted without license from IHS
Not for Resale

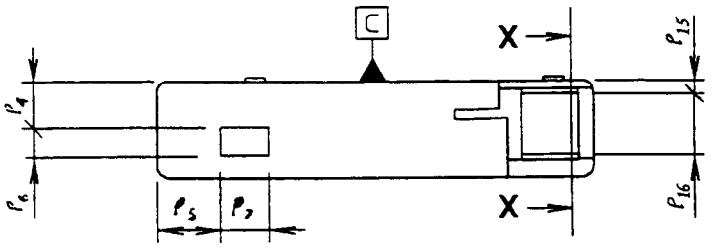

Figure 5 - Front side of case

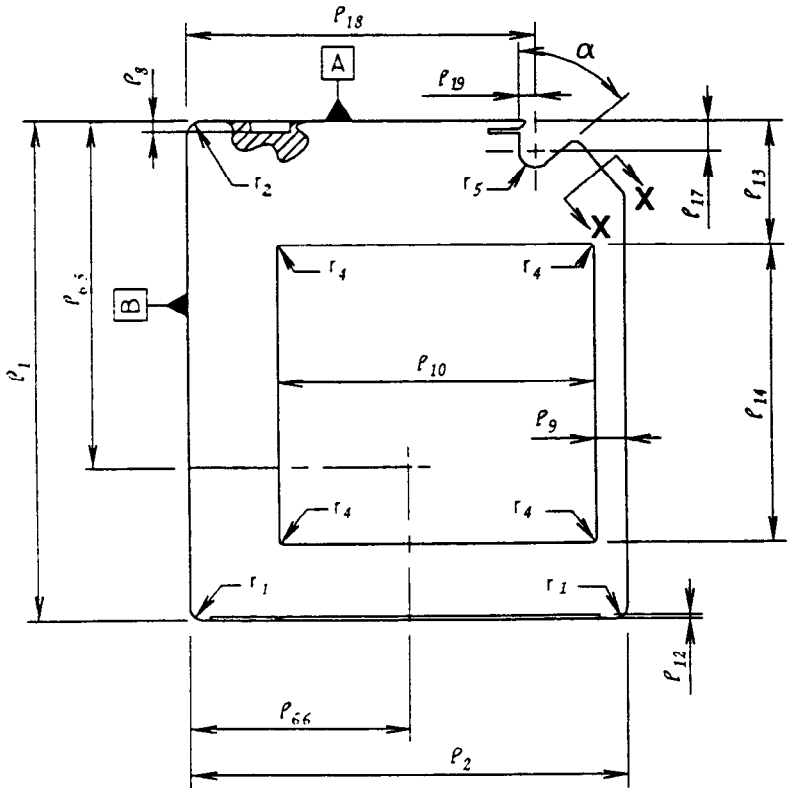

Figure 6 - Top side of case

Copyright International Organization for Standardization
Provided by IHS under license with ISO
No reproduction or networking permitted without license from IHS
Not for Resale

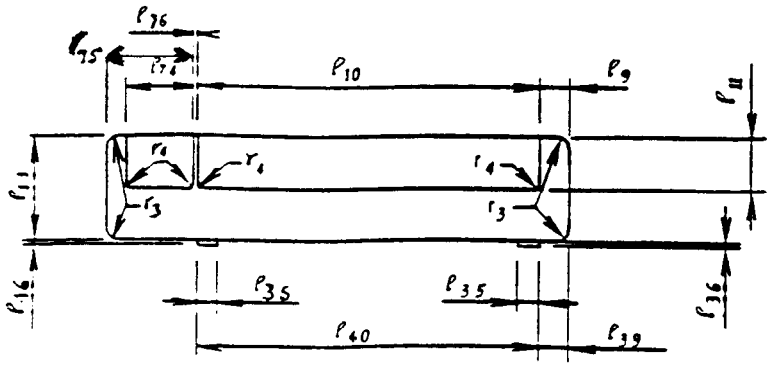

Figure 7 - Rear side of case

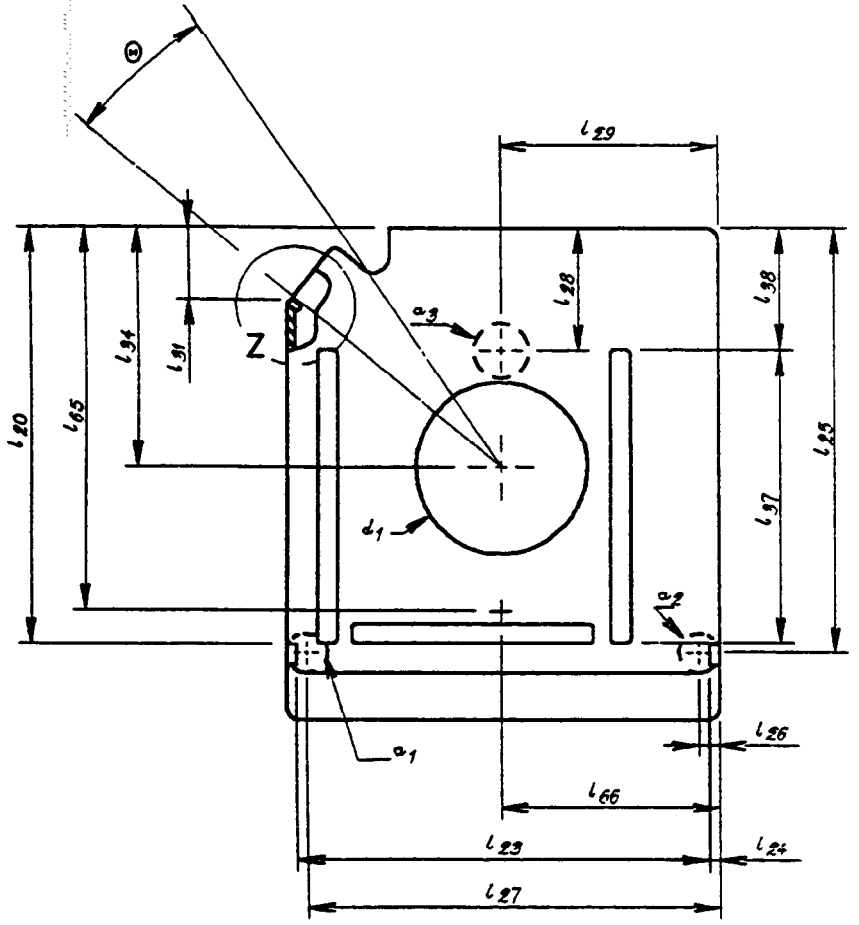

Figure 8 - Bottom side of case

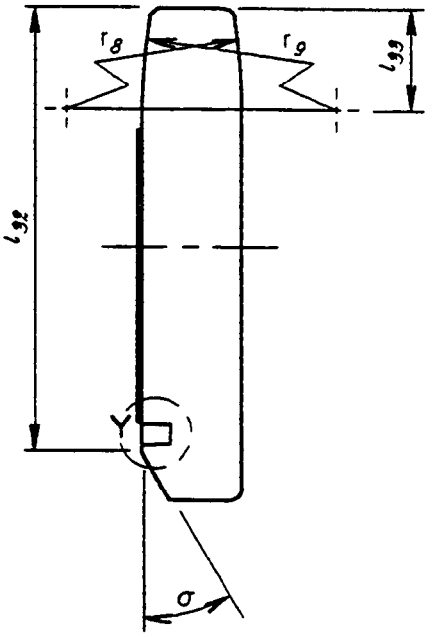

Figure 9 - Side of case

Copyright International Organization for Standardization
Provided by IHS under license with ISO
No reproduction or networking permitted without license from IHS

Not for Resale

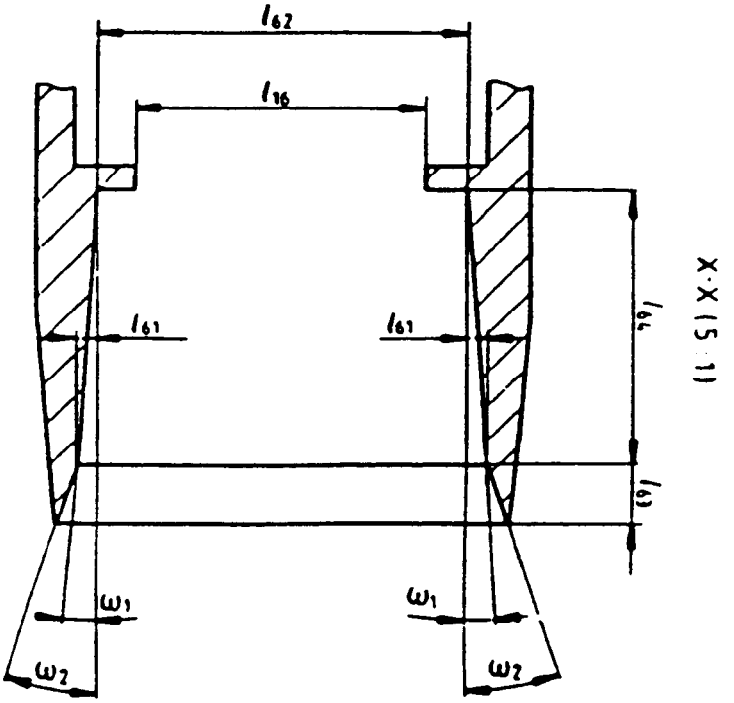

Figure 10 - Enlarged view

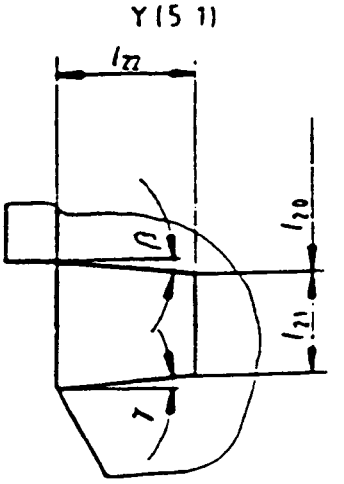

Figure 11 - Cross-section of a location notch

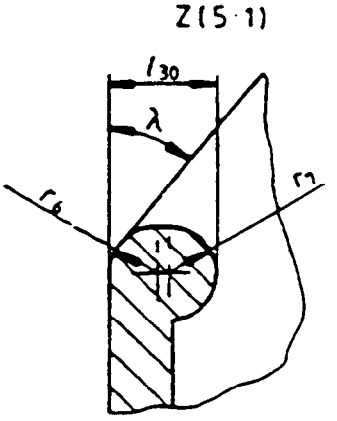

Figure 12 -Cross section of a detail of the opening of case

Copyright International Organization for Standardization
Provided by IHS under license with ISO
No reproduction or networking permitted without license from IHS
Not for Resale

©ISO/IEC

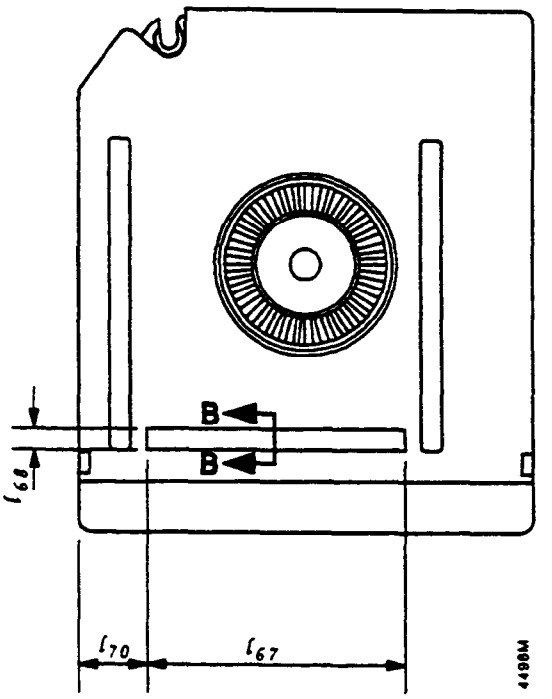

Figure 13 - Bottom side of case

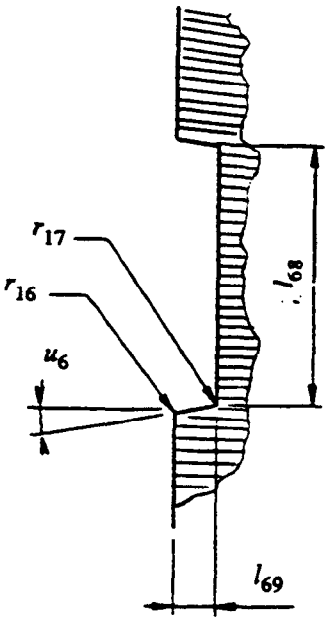

View BB

Figure 14 - Cross-section of the recessed area

Copyright International Organization for Standardization
Provided by IHS under license with ISO
No reproduction or networking permitted without license from IHS
Not for Resale

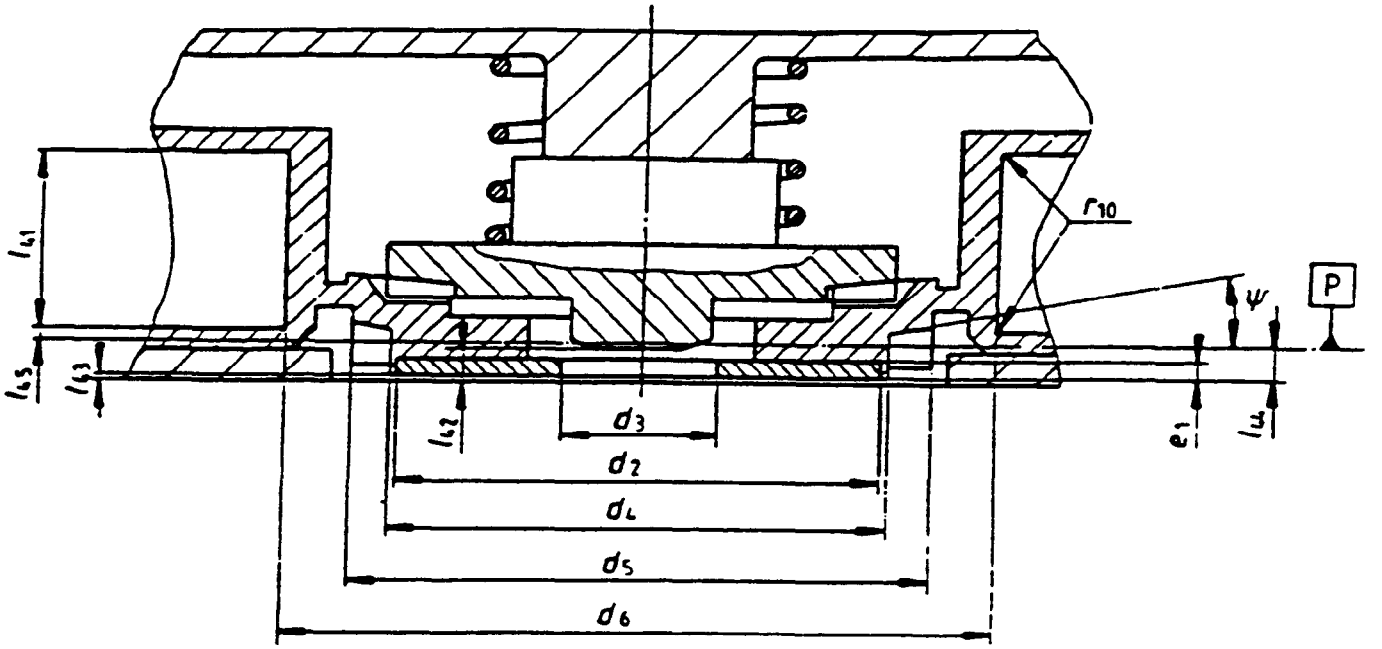

Figure 15 - Cross-section of the cartridge in hand

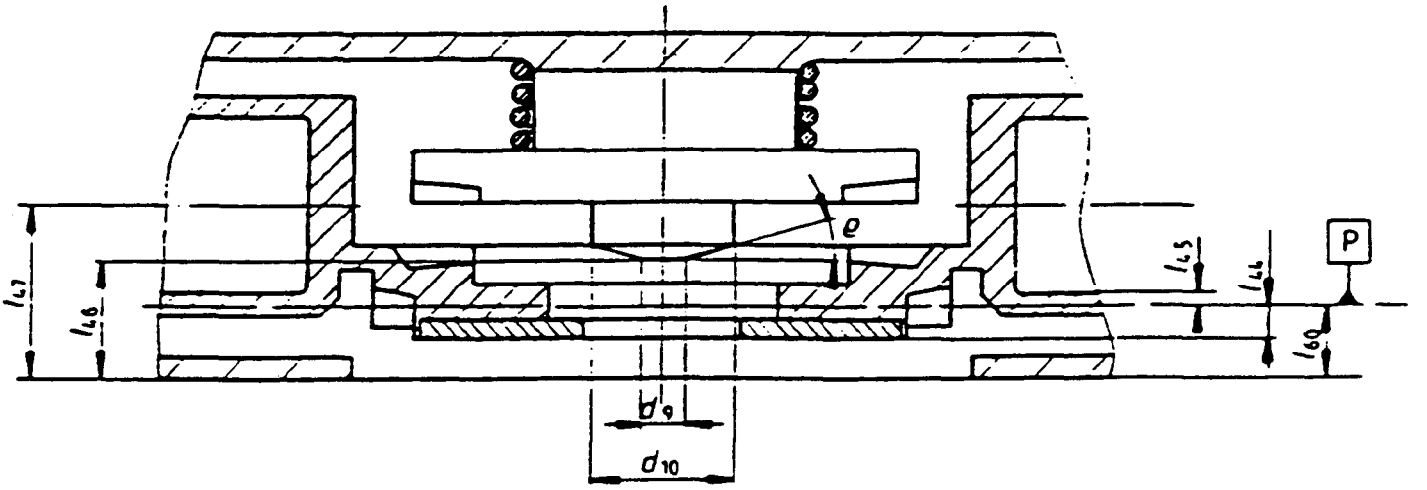

Figure 16 - Cross-section of the cartridge in the drive

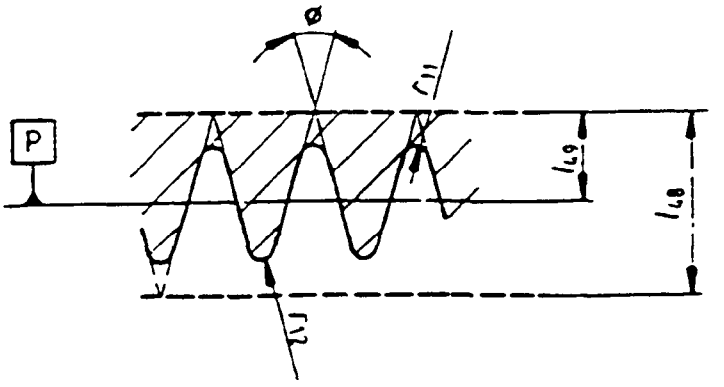

Figure 17 - Teeth of the toothed rim

Copyright International Organization for Standardization
Provided by IHS under license with ISO
No reproduction or networking permitted without license from IHS
Not for Resale

©ISO/IEC

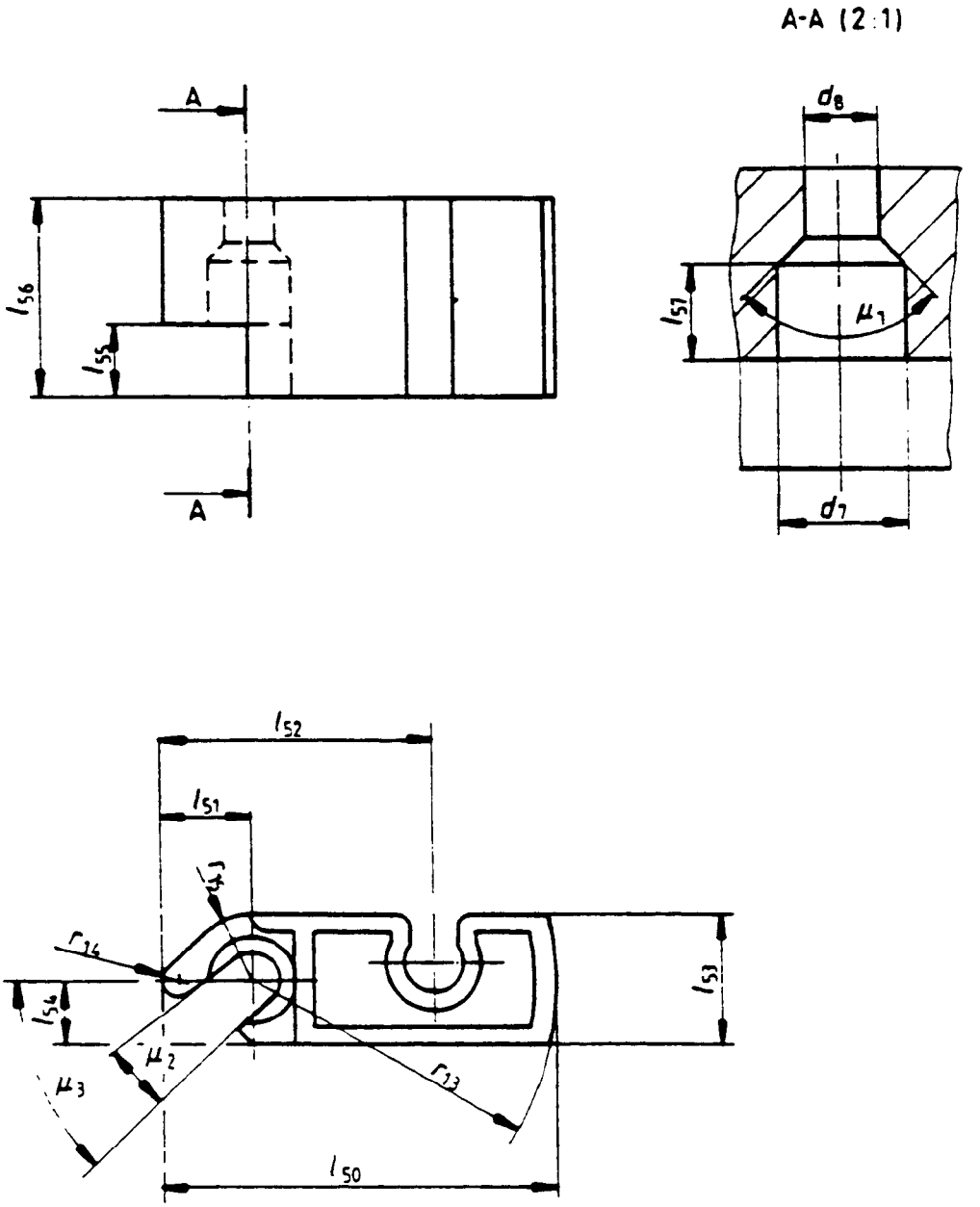

Figure 18 - Cross-section of leader block

Copyright International Organization for Standardization
Provided by IHS under license with ISO
No reproduction or networking permitted without license from IHS
Not for Resale

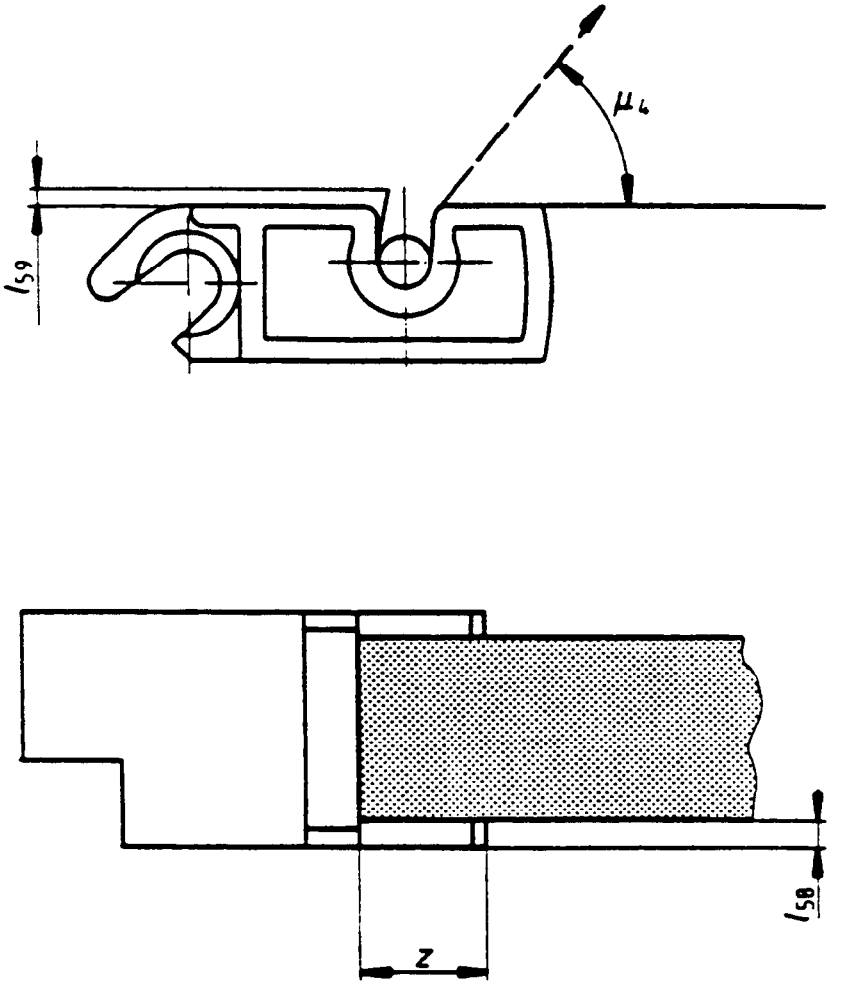

Figure 19 - Fixation of tape to leader block

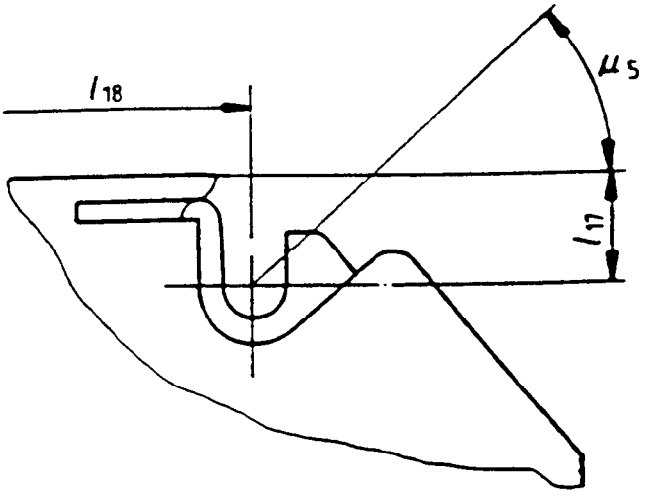

Figure 20 - Leader block in case

Copyright International Organization for Standardization
Provided by IHS under license with ISO
No reproduction or networking permitted without license from IHS
Not for Resale

Section 4 - Recording method and formats

9 Method of recording

The method of recording shall be

A ONE is represented by a transition at the beginning of a bit cell and no transition at the centre of the bit cell.
A ZERO is represented by a transition at the beginning of the bit cell followed by a transition at the centre of the bit cell.

9.1 Physical recording density

The physical recording density shall be

For all ZEROs: 1 944 ftpmm
For all ONEs: 972 ftpmm

9.2 Bit cell length

The resulting nominal bit cell length is 1,029 µm.

9.3 Average bit cell length

The average bit cell length is the sum of distances over n bit cells divided by n.

9.3.1 Long-term average bit cell length

The long-term average bit cell length shall be the average bit cell length taken over a minimum of 972 000 bit cells. It shall be within 4 % of the nominal bit cell length.

9.3.2 Short-term average bit cell length

The short-term average bit cell length shall be the average taken over 16-bit cells. It shall be within 7 % of the nominal bit cell length.

9.4 Rate of change of the short-term average bit cell length

The rate of change of the short-term average bit cell length shall not exceed 1,6 % as defined in figure 21.

Where T_n is the time measured over the first 64 bits and T_{n+1} is the time measured over the next 64 bits.

$$\left| \underbrace{T_n}_{\leftarrow 64\,\text{bits} \rightarrow} \; \underbrace{T_{n+1}}_{\leftarrow 64\,\text{bits} \rightarrow} \right|$$

$$100 \times \frac{|T_n - T_{n+1}|}{T_n} \leq 1,6\ \%$$

Figure 21 - Rate of change of the short-term average bit cell length

9.5 Bit cell peak position

The maximum bit cell peak position variation shall be within 30 % of its expected value when measured as follows:

a) Write a continuous all ONEs pattern in the areas to be measured.

b) Measure over a rolling 64-bit window, eliminating any samples that contain missing pulses. The sample shall be preceded and followed by 5 ONEs to eliminate inter-symbol interference from the measurement.

c) Calculate the average bit cell position within the 64-bit cell window by determining the total distance between the two end bit cell positions and dividing by 63. Any bit cell position shall be within the specified tolerance of its expected position within that 64-bit cell window.

Copyright International Organization for Standardization
Provided by IHS under license with ISO
No reproduction or networking permitted without license from IHS Not for Resale

9.6 Bit shift

The maximum displacement of any ONEs zero crossing, exclusive of missing pulses, shall not deviate by more than 28 % from the expected nominal position as defined by the average bit cell length. See annex D for the test procedure.

9.7 Total character skew

No data bit belonging to the same written transverse column shall be displaced by more than 19-bit cell lengths when measured in a direction parallel to the Tape Reference Edge.

9.8 Read signal amplitude

The average peak to peak signal amplitude of an interchanged cartridge averaged over 4 000 flux transitions at 972 ftpmm shall be between 60 % and 150 % of the Standard Reference Amplitude. Averaging for the interchange cartridge may be segmented into blocks. Traceability to the Standard Reference Amplitude is provided by the calibration factors supplied with each Secondary Standard Reference Tape.

9.9 Coincident missing pulse zones

No blocks shall be recorded over a Coincident Missing Pulse Zone. Such zones shall be erased as specified in 13.6.

10 Track format

10.1 Number of tracks

There shall be 36 physical tracks numbered from 1 to 36.

10.2 Track positions

The distance from the centreline of the tracks to the Tape Reference Edge shall be

Track 1:	11,838 mm
Track 2:	11,523 mm
Track 3:	11,208 mm
Track 4:	10,893 mm
Track 5:	10,578 mm
Track 6:	10,263 mm
Track 7:	9,948 mm
Track 8:	9,633 mm
Track 9:	9,318 mm
Track 10:	9,003 mm
Track 11:	8,688 mm
Track 12:	8,373 mm
Track 13:	8,058 mm
Track 14:	7,743 mm
Track 15:	7,428 mm
Track 16:	7,113 mm
Track 17:	6,798 mm
Track 18:	6,483 mm
Track 19:	6,168 mm
Track 20:	5,853 mm
Track 21:	5,538 mm
Track 22:	5,223 mm
Track 23:	4,908 mm
Track 24:	4,593 mm
Track 25:	4,278 mm
Track 26:	3,963 mm
Track 27:	3,648 mm
Track 28:	3,333 mm
Track 29:	3,018 mm
Track 30:	2,703 mm
Track 31:	2,388 mm
Track 32:	2,073 mm

Copyright International Organization for Standardization
Provided by IHS under license with ISO
No reproduction or networking permitted without license from IHS
Not for Resale

Track 33:	1,758 mm
Track 34:	1,443 mm
Track 35:	1,128 mm
Track 36:	0,813 mm

The tolerance shall be ± 0,040 mm for all tracks.

10.3 Track width

The width of the written track shall be 0,285 mm ± 0,012 mm.

10.4 Azimuth

On any track the angle that a flux transition across the track makes with a line perpendicular to the Tape Reference Edge shall not be greater than 3 minutes of arc.

NOTE 7 - At the time of tape writing, the azimuth should be less than 2,5 minutes of arc. The remaining 0,5 minutes of arc are the allowance for tape distortion caused by environmental conditions and ageing.

10.5 Track identification

The 36 physical tracks are allocated to 2 sets of 18 tracks each, called Half-Wrap 1 and Half-Wrap 2. The physical tracks with an odd physical track number shall constitute Half-Wrap 1; those with an even physical track number shall constitute Half-Wrap 2.

Copyright International Organization for Standardization
Provided by IHS under license with ISO
No reproduction or networking permitted without license from IHS
Not for Resale

Physical Track	Half-Wrap Track Number	
	Half-Wrap 1	Half-Wrap 2
1	1	
2		1
3	2	
4		2
5	3	
6		3
7	4	
8		4
9	5	
10		5
11	6	
12		6
13	7	
14		7
15	8	
16		8
17	9	
18		9
19	10	
20		10
21	11	
22		11
23	12	
24		12
25	13	
26		13
27	14	
28		14
29	15	
30		15
31	16	
32		16
33	17	
34		17
35	18	
36		18

Figure 22 - Relationship between physical and Half-Wrap Tracks

11 Packet format

Prior to formatting the data for recording, LDRs are mapped into packets on a one-to-one basis. These packets can contain either unprocessed or algorithmically processed user data (see annex L).

11.1 Packets

A packet shall consist of

- Packet ID
- UDR
- Packet Trailer

Copyright International Organization for Standardization
Provided by IHS under license with ISO
No reproduction or networking permitted without license from IHS
Not for Resale

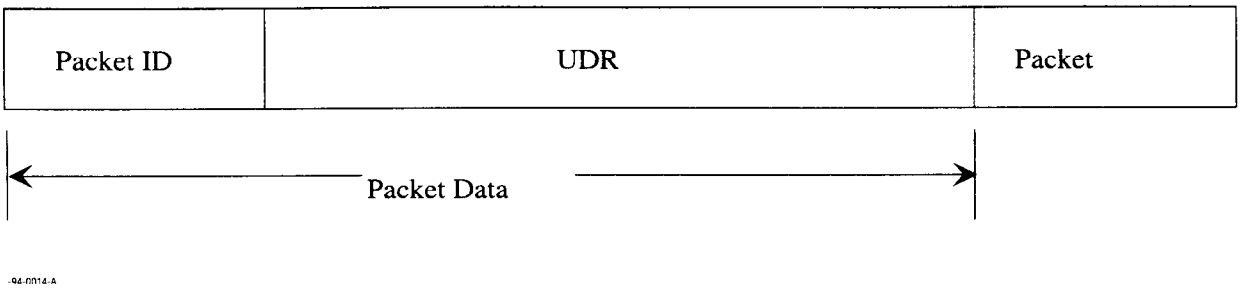

Figure 23 - Packet format

11.2 Packet ID

The Packet ID shall consist of 32 bytes numbered 1 to 32. The Packet ID shall not be processed.

bytes 1 to 6 constitute the Packet Block ID.

byte 1

- bits 1 to 7 shall be set to 0100000
- bit 8 shall be set to
  ZERO if the packet is recorded in Half-Wrap 1
  ONE if the packet is recorded in Half-Wrap 2

byte 2

- bit 1 shall be set to
  ZERO for packets recorded in Half-Wrap 1
  ONE for packets recorded in Half-Wrap 2
- bits 2 to 8 shall express, in binary notation, the value of a Physical Position Indicator at that point along the tape.

  See annex F for the method of calculation.

bytes 3 to 6 shall express, in binary notation, a count. The count shall be set to 0 for the first UDR or Tape Mark following the initial Interblock Gap after the VOLID Mark, if present, or the ID Separator Mark. The count shall be increased by 1 for each UDR, Tape Mark, and End of Data Block.

bytes 7 to 10 shall express, in binary notation, a value equal to the total number of bytes in the Packet Data field minus 1.

byte 11 shall express, in binary notation, a value equal to the total number of bytes in the Packet Trailer. The sum of bytes 7 to 10 and byte 11 shall be the total number of bytes in the packet minus 1.

byte 12

- bit 1 when set to ZERO shall indicate that this is not the last packet in the Data Block.

  when set to ONE shall indicate that this is the last packet in the Data Block.
- bit 2 when set to ZERO shall indicate that the user data has not been processed.

  when set to ONE shall indicate that the user data has been processed.
- bits 3 to 8 shall be set to ZERO.

byte 13 when bit 2 of byte 12 is set to ZERO, byte 13 shall be set to all ZEROs,
when bit 2 of byte 12 is set to ONE, byte 13 shall contain in binary notation the identification of the algorithm, according to ISO/IEC 11576, used to process the UDR.

bytes 14 to 30 shall be set to all ZEROs,

bytes 31 to 32 The penultimate and ultimate bytes of the Packet ID shall contain CRC byte 1 and CRC byte 2, respectively, computed sequentially over the bytes from the Packet ID as described in annex E.
The input shall be inverted before processing in the CRC character generator. The bits in the CRC character shall be inverted before appending to the rest of the bytes of the Packet ID.

Copyright International Organization for Standardization
Provided by IHS under license with ISO
No reproduction or networking permitted without license from IHS Not for Resale

11.3 UDR

The UDR shall contain either all Processed or all Unprocessed Data as indicated by byte 12, bit 2 of the Packet ID. The number of unprocessed user bytes in a Logical Data Record is limited to 262 144 by this format.

11.4 Packet trailer

There are two forms of Packet Trailer; one form is used in packets containing Processed Data and the other form in packets containing Unprocessed Data. Packet Trailer bytes shall not be processed.

11.4.1 Packet trailer when data has been processed

The Packet Trailer shall be 10 to 41 bytes in length.

Bytes 1 to 4 shall express, in binary notation, a count of the number of bytes from the LDR in the packet (i.e. before processing).

Bytes 5 and 6 shall contain CRC byte 1 and CRC byte 2, respectively, computed sequentially over the bytes from the LDR in the packet (i.e before processing), as described in annex E.

Bytes 7 and 8 shall contain CRC byte 1 and CRC byte 2, respectively, computed sequentially over the bytes from the UDR in the packet (i.e after processing), and the first 6 bytes of the Packet Trailer, as described in annex E.

Pad bytes A sufficient number of Pad bytes, in the range of 0 to 31, shall be added to the Packet Trailer such that the entire packet consists of an integral multiple of 32 bytes.

Packet Trailer CRC bytes

The penultimate and ultimate bytes of the Packet Trailer shall contain CRC byte 1 and CRC byte 2, respectively, computed sequentially over the bytes from the UDR (i.e. after processing), and the preceding bytes in the Packet Trailer as described in annex E.

The input shall be inverted before processing in the CRC character generator. The bits in the CRC character shall be inverted before appending to the rest of the bytes of the Packet Trailer.

11.4.2 Packet trailer when the data has not been processed

The Packet Trailer shall be 2 to 33 bytes in length.

Pad bytes There shall be 0 to 31 Pad bytes such that the entire packet consists of an integral multiple of 32 bytes.

Packet Trailer CRC bytes

The penultimate and ultimate bytes of the Packet Trailer shall contain CRC byte 1 and CRC byte 2, respectively, computed sequentially over the bytes from the LDR and the preceding Pad bytes in the Packet Trailer as described in annex E.

The input shall be inverted before processing in the CRC character generator. The bits in the CRC character shall be inverted before appending to the rest of the bytes of the Packet Trailer.

12 Data block format

12.1 Data part

The Data Part of a Data Block shall consist of one or more packets, sequentially appended, followed by a Count field and Block ID bytes.

The bytes of this Data Part are termed Data bytes and comprise Packet bytes, Count field bytes, and Block ID bytes.

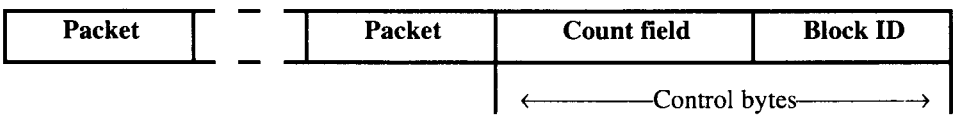

Figure 24 - Data part of a Data Block

The total number of bytes in the appended packets shall not exceed 461 824. The number of appended packets shall not exceed 2 048. The appending process shall be terminated if a Tape Mark is to be written. The appending process shall be terminated on packet boundaries for these or any other appropriate reasons.

NOTE 8 - It is recommended that Data Block sizes be limited to values in the range of 128K bytes.

Copyright International Organization for Standardization
Provided by IHS under license with ISO
No reproduction or networking permitted without license from IHS Not for Resale

12.1.1 Packet bytes

Packet bytes comprise UDR bytes, Packet ID bytes and Packet Trailer bytes.

12.1.2 Count field bytes

The Count field shall comprise 6 bytes. These bytes shall follow the last byte of the Packet Trailer byte.

Bytes 1 and 2	shall contain, in binary notation, a value equal to the number of packets contained in the Data Block.
Bytes 3 to 6	shall contain, in binary notation, a value calculated before processing as follows: for each LDR a sub-total shall be computed by dividing the number of bytes by 32 and adding 1 if the remainder is greater than 0. The sum of these sub-totals shall be the value recorded in these bytes.

12.1.3 Block ID bytes

The 4-byte Block ID shall follow the bytes of the Count field. The bits shall be numbered from 1 (most significant) to 32 (least significant).

bit 1	shall be set to ZERO for blocks recorded in Half-Wrap 1 and shall be set to ONE for blocks recorded in Half-Wrap 2
bits 2 to 8	shall express, in binary notation, the value of the Physical Position Indicator along the tape. See annex F for the method of calculation
bit 9	shall be set to ZERO
bit 10	shall be set to ONE
bits 11 to 32	shall express, in binary notation, the same count that is contained in the Packet Block ID for the first packet in the Data Block. See 11.2 , bytes 3 to 6.

12.2 Allocation of the bytes of the data block to frames

The Data bytes of the Data Block shall be arranged in groups, called Frames, completed with check characters. These Frames shall, in turn, be arranged in a given sequence together with additional groups of bytes having prescribed bit patterns. The so-arranged Data bytes and additional bytes shall then be recorded on the tape according to a specific coding scheme (see annex C).

A Frame shall be a section across all 18 Half-Wrap Tracks which contains logically related 8-bit bytes, one byte per track. Each byte in a Frame is recorded along a track. See figure 25.

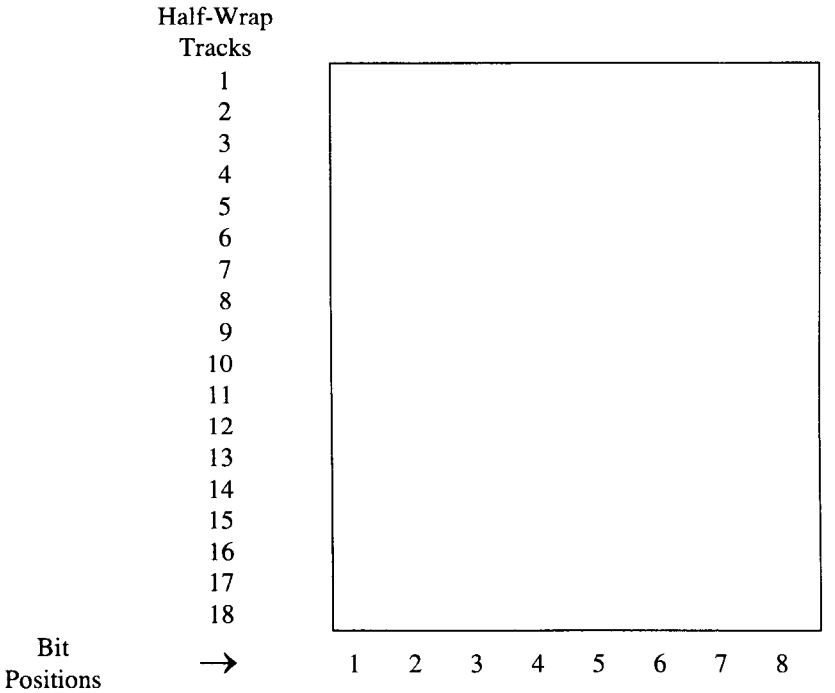

Figure 25 - Frame

Copyright International Organization for Standardization
Provided by IHS under license with ISO
No reproduction or networking permitted without license from IHS
Not for Resale

There are four types of Frames in a Data Block

Prefix Frames
Data Frames
Residual Frames
Suffix Frames

The following types of byte are used in Data Block Frames

Data bytes
Pad bytes
Residual bytes
ECC bytes
CRC bytes

A Data Block shall have the structure shown in figure 26.

Prefix	the first two Frames
Data Frames	Frames containing Data bytes grouped in Clusters
Residual Frames	Residual Frame 1 and Residual Frame 2, or Residual Frame 2 only
Suffix	the last two Frames

12.2.1 Prefix frames

The Prefix shall consist of two Frames containing Pad bytes in all 18 Half-Wrap tracks.

Prefix	1st Data Cluster	2nd Data Cluster	....	last Data Cluster	Residual 1	Residual 2	Suffix
2 Frames	69 Frames	71 Frames		up to 71 Frames	1 Frame	1 Frame	2 Frames

Figure 26 - Data Block

12.2.2 Data frames

Each Data Frame shall consist of (see figure 27)

- 7 consecutive Packet bytes recorded in odd Half-Wrap Tracks 1 to 13,
- the next 7 consecutive Packet bytes recorded in even Half-Wrap Tracks 2 to 14,
- ECC byte 2 recorded in Half-Wrap Track 15,
- ECC byte 3 recorded in Half-Wrap Track 16,
- ECC byte 1 recorded in Half-Wrap Track 17,
- ECC byte 4 recorded in Half-Wrap Track 18,

The first Data Frame of a Data Block shall contain the first 14 Packet bytes in the Data Block.

The Data Frames are grouped in Clusters as follows:

- the first Cluster shall contain up to 69 Frames of Packet bytes,
- the next Clusters, if provided, shall contain 71 Frames of Packet bytes,
- the last Cluster shall contain up to 71 Frames of Packet bytes.

Copyright International Organization for Standardization
Provided by IHS under license with ISO
No reproduction or networking permitted without license from IHS Not for Resale

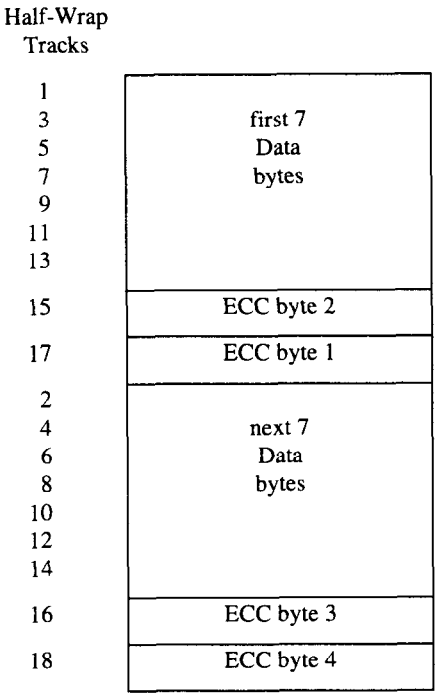

Figure 27 - Data Frame

12.2.3 Residual frame 1

If after the last complete Data Frame of the last Data Cluster 12 or 13 bytes remain to be recorded, there shall be a Residual Frame 1. If the number of remaining Data bytes is less than 12 there shall be no Residual Frame 1.

The structure of the Residual Frame 1 shall be

- 12 or 13 Data bytes;
- 1 or 2 additional Pad bytes, depending on the number of remaining Data bytes;
- ECC bytes in Half-Wrap tracks 15, 16, 17, and 18.

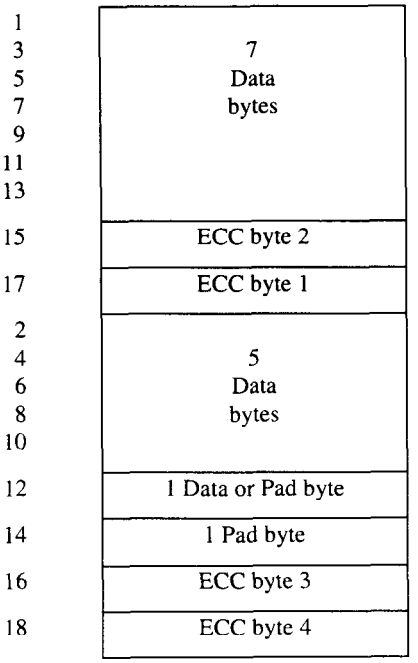

Figure 28 - Residual Frame 1

Copyright International Organization for Standardization
Provided by IHS under license with ISO
No reproduction or networking permitted without license from IHS
Not for Resale

12.2.4 Residual frame 2

If there is no Residual Frame 1, i.e. if there are eleven or less remaining Data bytes, these Data bytes followed by sufficient additional Pad bytes to total 11 bytes shall be recorded in odd Half-Wrap Tracks 1 to 13 and even Half-Wrap Tracks 2 to 8.

If there is a Residual Frame 1, odd Half-Wrap Tracks 1 to 13 and even Half-Wrap Tracks 2 to 8 shall be recorded with additional Pad bytes.

In either case

- Half-Wrap Track 10 shall be recorded with the Residual byte (see 12.2.4.1);
- Half-Wrap Tracks 12 and 14 with the CRC byte 1 and the CRC byte 2,
- Half-Wrap Tracks 15, 16, 17, and 18 with the ECC bytes.

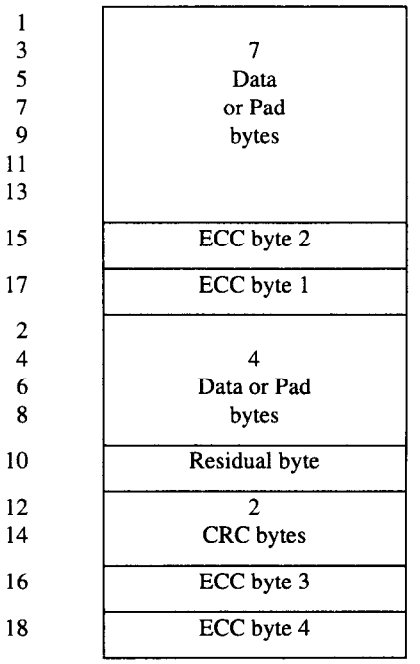

Figure 29 - Residual Frame 2

12.2.4.1 Residual byte

The Residual byte shall be recorded in Half-Wrap Track 10 of Residual Frame 2.

bits 1 and 2 are unspecified; they can be ONE or ZERO.

bits 3 and 4 shall be ONEs.

bits 5 to 8 shall express, in binary notation, the total number of Pad bytes in the Residual Frames.

12.2.4.2 Cyclic redundancy check character (CRC)

Half-Wrap Tracks 12 and 14 of the Residual Frame 2 shall contain CRC byte 1 and CRC byte 2, respectively, computed sequentially over the Packet bytes, the Count bytes, Block ID bytes, the Pad bytes and the Residual byte, as described in annex E. This does not include the ECC bytes.

12.2.4.3 Summary of requirements for residual frames

Table 1 summarizes the requirements for Residual Frame 1 and Residual Frame 2.

Copyright International Organization for Standardization
Provided by IHS under license with ISO
No reproduction or networking permitted without license from IHS
Not for Resale

Table 1 - Residual Frame Contents

Number of Data bytes remaining after last complete Data Frame			Residual Frame 1				Residual Frame 2					
User bytes	Count field bytes	Block ID bytes	Packet bytes	Count field bytes	Block ID bytes	Add. Pad bytes	Packet bytes	Count field bytes	Block ID bytes	Add. Pad bytes	Resid bytes	CRC bytes
0	0	0	No Residual Frame 1				0	0	0	11	1	2
0	0	1					0	0	1	10	1	2
0	0	2					0	0	2	9	1	2
0	0	3					0	0	3	8	1	2
0	0	4					0	0	4	7	1	2
0	1	4					0	1	4	6	1	2
0	2	4					0	2	4	5	1	2
0	3	4					0	3	4	4	1	2
0	4	4					0	4	4	3	1	2
0	5	4					0	5	4	2	1	2
0	6	4					0	6	4	1	1	2
1	6	4					1	6	4	0	1	2
2	6	4	2	6	4	2	0	0	0	11	1	2
3	6	4	3	6	4	1	0	0	0	11	1	2

12.2.5 Suffix frames

The Suffix Frames shall consist of two Frames containing Pad bytes in all 18 Half-Wrap Tracks.

12.3 Error correction code (ECC)

ECC bytes are generated from the rest of the Data Block bytes and are used to detect and correct errors during reading of the data.

The Error Correcting Code is a Reed-Solomon Code. For each Frame, four ECC bytes shall be generated by processing the 14 bytes in Half-Wrap Tracks 1 to 14 through a generator circuit (see figure 30).

The GF(2^8) calculation shall be defined by

$G(x) = x^8 + x^4 + x^3 + x^2 + 1$

A primitive element α in GF(2^8) shall be

$$\alpha = (\underset{\alpha^7}{0} \; \underset{\alpha^6}{0} \; \underset{\alpha^5}{0} \; \underset{\alpha^4}{0} \; \underset{\alpha^3}{0} \; \underset{\alpha^2}{0} \; \underset{\alpha^1}{1} \; \underset{\alpha^0}{0})$$

Copyright International Organization for Standardization
Provided by IHS under license with ISO
No reproduction or networking permitted without license from IHS
Not for Resale

The generator polynomial shall be

$G(x) = x^4 \oplus \alpha^{75}x^3 \oplus \alpha^{249}x^2 \oplus \alpha^{78}x \oplus \alpha^6$

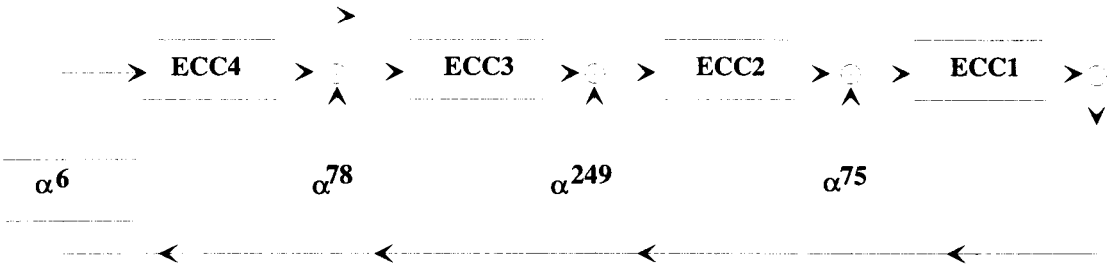

Figure 30 - Example of an ECC generator circuit

where ⊕ is the Exclusive OR function.

The four ECC bytes produced (ECC1, ECC2, ECC3, and ECC4) shall be placed in Half-Wrap tracks 17, 15, 16, and 18, respectively.

12.4 Recording of 8-bit bytes on the tape

Each 8-bit byte, including the ECC bytes, in the Prefix, in the Data Frames, in the Residual Frame(s) and in the Suffix shall be represented by a 9-bit pattern on the tape.

Annex C specifies the 9-bit pattern representing each 8-bit byte. The bit of the 9-bit pattern in the most significant position shall be recorded first.

12.5 Recorded data block

When recorded on the tape each Data Block shall have the structure identified in figure 31 and be called a Recorded Data Block.

Half-Wrap 1 shall be completely recorded before any data is recorded in Half-Wrap 2.

Copyright International Organization for Standardization
Provided by IHS under license with ISO
No reproduction or networking permitted without license from IHS
Not for Resale

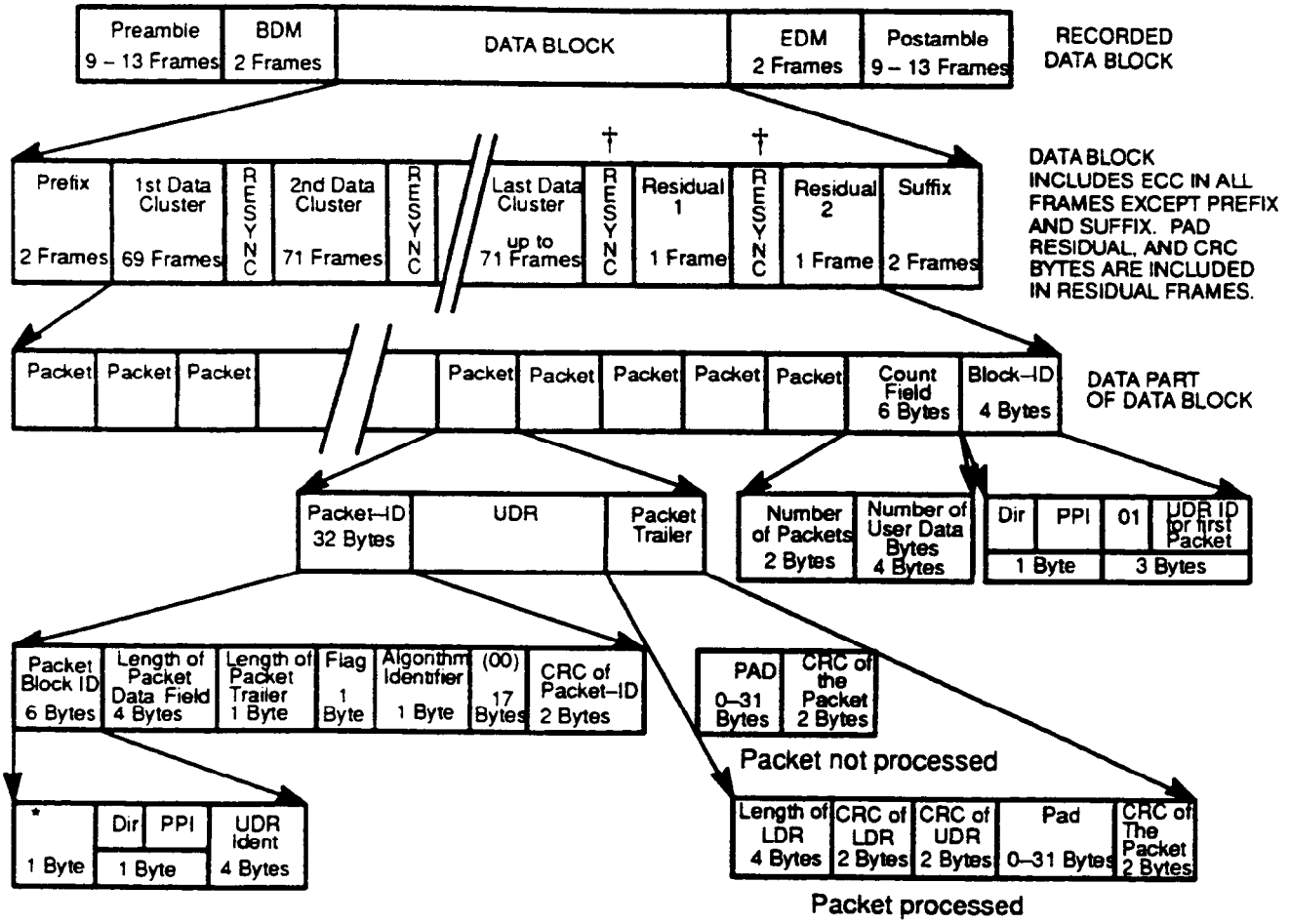

Dir 0 for First Half-Wrap
1 for Second Half-Wrap

* 40) for First Half-Wrap
(41) for Second Half-Wrap

† The presence of this Resync Control Block depends on the number of preceding Frames (see 12.5.3)

Figure 31 - Recorded Data Block

12.5.1 Preamble

The Preamble shall consist of a minimum of 9 and a maximum of 13 Frames recorded with the 9-bit pattern 111111111 in all Half-Wrap Tracks.

12.5.2 Beginning of data mark (BDM)

The BDM shall consist of 2 Frames recorded with the 9-bit pattern 100010001 in all Half-Wrap Tracks.

12.5.3 Resync control frame

A Resync Control Frame shall have the 9-bit pattern 100010001 in all Half-Wrap Tracks. A Resync Control Frame shall follow each complete Cluster. If a Resync Control Frame would be written just before an EDM, it shall not be written. The first Frame of the EDM shall take its place.

12.5.4 End of data mark (EDM)

The EDM shall consist of 2 Frames recorded with the 9-bit pattern 100010001 in all Half-Wrap Tracks.

12.5.5 Postamble

The Postamble shall consist of a minimum of 9 and a maximum of 13 Frames recorded with the 9-bit pattern 111111111 in all Half-Wrap Tracks.

Copyright International Organization for Standardization
Provided by IHS under license with ISO
No reproduction or networking permitted without license from IHS
Not for Resale

12.6 Maximum data density

Due to the insertion of ECC bytes, Resync Control Frames, and to the 8-bit to 9-bit conversion, the maximum density of Data bytes is 14 x 972 x (1/8) x (8/9) x (71/72) = 1 491 Data bytes per millimetre within a Half-Wrap,

where

14	is the number of Data bytes per Frame,
972	is the number of flux transitions per millimetre for the all ONEs density,
1/8	is the inverse value of the number of bits per byte,
8/9	is corresponds to the recording scheme of 12.4,
71/72	is corresponds to the Resync Control Frames.

13 Tape format

The format of the tape is defined by the following marks and gaps separating and/or qualifying the Recorded Data Blocks.

Density Identification Mark
ID Separator Mark
Interblock Gap
Erase Gap
Tape Mark
Wrap Mark
VOLID Mark

The marks and gaps are characterized by all ONEs or tone patterns written in groupings of Half-Wrap Tracks called Zones. The tone shall be written on tape as the repeated 6-bit pattern 100000.

13.1 Zones

The 18 Half-Wrap Tracks within each Half-Wrap shall be divided into six Zones, as follows

	Half-Wrap Tracks
Zone A:	1, 7, 13
Zone B:	2, 8, 14
Zone C:	3, 9, 15
Zone D:	4, 10, 16
Zone E:	5, 11, 17
Zone F:	6, 12, 18

13.2 Density ID mark

The Density ID Mark shall be characterized by

In Half-Wrap 1:	all ONEs in Zones B, C, E tone in Zones A, D, F
In Half-Wrap 2:	all ZEROs in all Zones

The Density ID Mark shall be written in one of two modes. Mode 1 shall be used when no VOLID Mark is to be written. Mode 2 shall be used when a VOLID Mark is to be written. Use of the VOLID Mark is optional.

Copyright International Organization for Standardization
Provided by IHS under license with ISO
No reproduction or networking permitted without license from IHS
Not for Resale

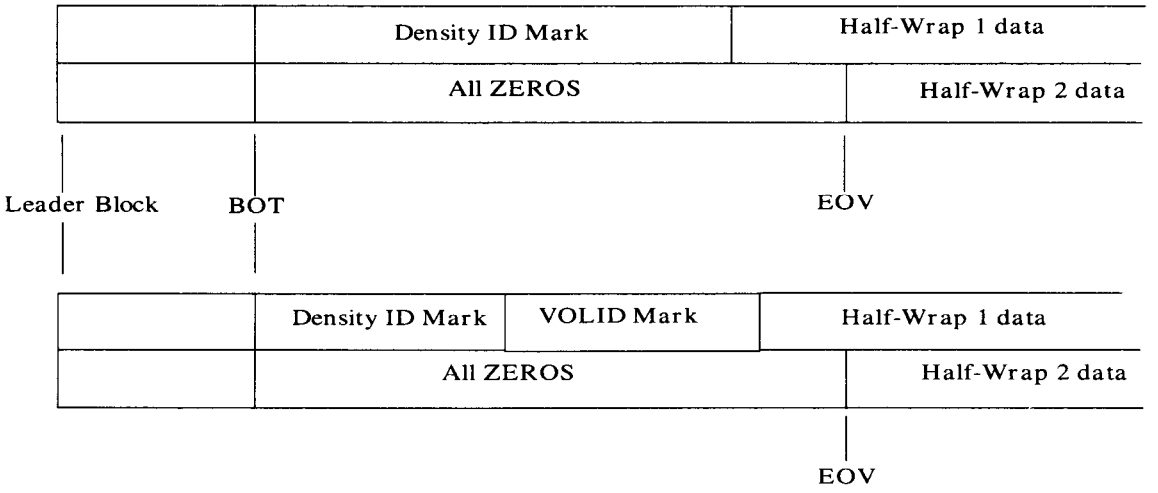

Figure 32 - Density ID Mark with and without the VOLID Mark

The length of the Density ID Mark on a CST tape, when no VOLID Mark is written, shall be

nominal: 2 375 mm
minimum: 2 250 mm
maximum: 3 060 mm

The length of the Density ID Mark on a CST tape, when a VOLID Mark is written, shall be

nominal: 2 195 mm
minimum: 2 070 mm
maximum: 2 880 mm

On a CST tape, the area which is written with an all ZEROs pattern shall begin a distance of at least 4,50 m from the Leader Block and be written to BOT in Half-Wrap 2. The Density ID Mark shall begin a maximum of 1,34 m from the Leader Block and end a minimum of 3,28 m from the Leader Block without the VOLID Mark or 3,18 m from the Leader Block with the VOLID Mark.

The length of the Density ID Mark on an ECCST tape, with or without a VOLID Mark, shall be

nominal: 1 056 mm
minimum: 1 003 mm
maximum: 1 714 mm

On an ECCST tape, the area which is written with an all ZEROs pattern shall begin a distance of at least 8,75 m from the Leader Block and be written to BOT in Half-Wrap 2. The Density ID Mark shall begin a maximum of 6,94 m from the Leader Block and end a minimum of 7,38 m from the Leader Block.

The Density ID Mark and all ZEROs area shall normally be the first recordings closest to the Leader Block. Up to the first 25 mm of recording in Half-Wrap 1 may contain information other than the Density ID Mark pattern.

13.3 VOLID mark

The VOLID Mark, if present, shall immediately follow the IBG after the ID Separator Mark.

The VOLID Mark shall consist of combinations of marks and shall be used to provide data regarding the Volume ID of the cartridge. Marks shall be used to represent VOLID ONEs and ZEROs which are separated by IBGs (see 13.5). The VOLID Mark shall be terminated by a normal Erase Gap (see 13.6.1) followed by an IBG.

VOLID ONEs and ZEROs shall be represented by

all ONEs in Zones B, C, F
tone in Zones A, D, E

A VOLID ONE shall have a length of

nominal: 1,00 mm
minimum: 0,95 mm

Copyright International Organization for Standardization
Provided by IHS under license with ISO
No reproduction or networking permitted without license from IHS
Not for Resale

maximum: 1,05 mm

A VOLID ZERO shall have a length of

nominal: 0,50 mm
minimum: 0,47 mm
maximum: 0,53 mm

The IBG patterns within the VOLID Mark shall have a length of

nominal: 2,0 mm
minimum: 1,9 mm
maximum: 2,1 mm

The VOLID Mark shall contain 73 VOLID bits which specify the following information

VOLID bits 1 to 48 — the volume identifier of the cartridge. These characters shall be the same as those contained in bytes 5 to 10 in the VOL1 Header Record, if present. See ISO 1001 for more information regarding the VOL1 Header Record. All references to specific bytes in the VOL1 Header are defined in ISO 1001.

VOLID bits 49 to 56 — the Volume Accessibility of the cartridge. This information is contained in byte 11 of the VOL1 Header Record, if present.

VOLID bits 57 to 64 — shall denote the label Standard version which the VOL1 label, if present, meets. This information is contained in byte 80 of the VOL1 Header, if present.

VOLID bit 65 — shall indicate whether the data in the previous 64 bits conforms to International Standard ISO/IEC 646. Bit 65

shall be set to ONE to indicate that the data conforms to the International Reference Version of ISO/IEC 646. It shall be set to ZERO otherwise.

VOLID bits 66 to 73 — shall contain an 8-bit cyclic redundancy check of the previous 65 bits. The CRC shall be generated using a shortened, expurgated Hamming code with a generator polynomial of:

$G(x) = 1 + x + x^3 + x^4 + x^7 + x^8$

where $P(x) = 1 + x^3 + x^7$ is the primitive polynomial

The Hamming code is shortened to 73, 65 from 127, 119.

The VOLID Mark is optional. If present, all 73 bits shall be included.

13.4 ID separator mark

The ID Separator Mark shall be characterized by

All ONEs in all Zones.

Its length shall be

nominal: 2,0 mm
minimum: 1,9 mm
maximum: 2,1 mm

The ID Separator Mark shall directly follow the Density ID Mark in Half-Wrap 1. It separates the Density ID Mark from the succeeding IBG.

13.5 Interblock gap

The IBG shall be characterized by

all ONEs in Zones A, D, F
tone in Zones B, C, E

Its length shall be:

nominal: 2,0 mm
minimum: 1,6 mm
maximum: 3,0 mm

Copyright International Organization for Standardization
Provided by IHS under license with ISO
No reproduction or networking permitted without license from IHS Not for Resale

Any discontinuity across all tracks in an IBG (such as caused by a stop/start operation) shall not be greater than 0,03 mm in length. Such discontinuity shall not occur within 0,5 mm before the Preamble of a Recorded Data Block or within 0,5 mm after the Postamble of such a block.

An IBG shall be recorded immediately after the ID Separator Mark. There shall be an IBG recorded before and after each Recorded Block, Erase Gap, Tape Mark, Wrap Mark, VOLID Mark, and EOD Mark. If an End of Data Mark does not follow the last Tape Mark on the tape, then an IBG is not required after the last Tape Mark on the tape. If a partial IBG is written after the last Tape Mark, then it shall be at least 0,5 mm long. The IBG preceding the first Wrap Mark in Half-Wrap 2 may also be a partial IBG. It shall be at least 0,5 mm long.

13.6 Erase gap

The Erase Gap shall be characterized by

all ONEs in Zones B, C, F
tone in Zones A, D, E

Erase Gaps shall be written over a length of tape where an unsuccessful write operation occurred, or when an Erase Gap instruction is given.

13.6.1 Normal erase gap

The length of a Normal Erase Gap shall be

nominal:	7,8 mm
minimum:	7,4 mm
maximum:	8,2 mm

Up to 50 successive Normal Erase Gaps, separated by IBGs, are permitted to be written to cover a defect area.

13.6.2 Extended erase gap

The length of an Extended Erase Gap shall be

maximum: 200 mm

The Extended Erase Gap shall be recorded when a Normal Erase Gap and/or the following IBG is not recognized as such. Within an Extended Erase Gap partial IBGs of less than 1 mm are permitted to appear.

13.7 Tape mark

The Tape Mark shall be characterized by

all ONEs in Zones B, D, E
tone in Zones A, C, F

The length of each Tape Mark shall be

nominal:	1,0 mm
minimum:	0,7 mm
maximum:	1,3 mm

The use of Tape Marks is specified in ISO 1001.

13.8 Wrap marks

Wrap Marks shall be characterized by

all ONEs in Zones A, C, E
tone in Zones B, D, F

Wrap Marks shall be written in the sequence shown in figure 33 after the last data in Half-Wrap 1 and prior to the first data in Half-Wrap 2:

Copyright International Organization for Standardization
Provided by IHS under license with ISO
No reproduction or networking permitted without license from IHS
Not for Resale

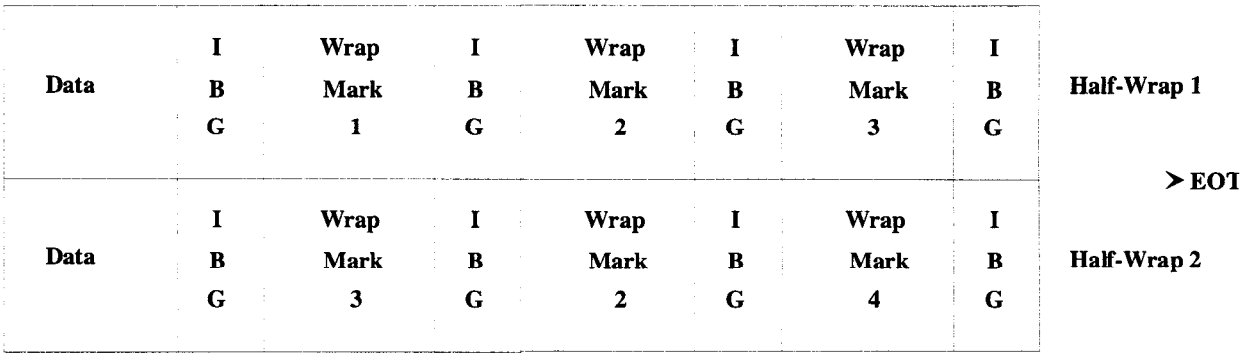

Figure 33 - Sequence of Wrap Marks

The length of Wrap Mark 1 shall be

nominal: 10,0 mm
minimum: 9,0 mm
maximum: 11,0 mm

The length of Wrap Mark 2 shall be

nominal: 6,0 mm
minimum: 5,2 mm
maximum: 6,8 mm

The length of Wrap Mark 3, without extensions, shall be

nominal: 10,0 mm
minimum: 9,0 mm
maximum: 11,0 mm

The length of Wrap Mark 4, without extensions, shall be

nominal: 10,0 mm
minimum: 9,0 mm
maximum: 11,0 mm

Wrap Mark 3 shall be extended in 3,0 mm ± 0,3 mm increments from the nominal 10 mm length a maximum of three times if the read back check of the following IBG is unsuccessful. With all three extensions, Wrap Mark 3 shall not be longer than 20,9 mm. If the Wrap Mark is fully extended, a valid IBG is not required after Wrap Mark 3 in Half-Wrap 1, nor is a valid IBG required prior to Wrap Mark 4.

Wrap Mark 4 shall be extended such that its length shall be the same as that of Wrap Mark 3 written in Half-Wrap 1 and it is positioned adjacent to Wrap Mark 3 in Half-Wrap 1.

The IBG closest to EOT may be less than the full length but shall be at least 0,50 mm in length unless Wrap Marks 3 and 4 are fully extended.

13.9 Mark merge

Where an IBG precedes or follows an Erase Gap, Tape Mark, Wrap Mark, or VOLID Mark, in six of the nine Half-Wrap Tracks the tone pattern of one of these Gaps or Marks shall extend into the ONE bits pattern of the other as specified below.

13.9.1 IBG followed by a tape mark

On Half-Wrap Tracks 1, 6, 7, 12, 13, and 18
- 18 tone bits replace the last 18 ONEs bits of the IBG

On Half-Wrap Tracks 2, 5, 8, 11, 14, and 17
- 18 tone bits replace the first 18 ONEs bits of the Tape Mark

13.9.2 Tape mark followed by an IBG

On Half-Wrap Tracks 1, 6, 7, 12, 13, and 18
- 18 tone bits replace the first 18 ONEs bits of the IBG

Copyright International Organization for Standardization
Provided by IHS under license with ISO
No reproduction or networking permitted without license from IHS
Not for Resale

On Half-Wrap Tracks 2, 5, 8, 11, 14, and 17
- 18 tone bits replace the last 18 ONEs bits of the Tape Mark

13.9.3 IBG followed by a erase gap

On Half-Wrap Tracks 1, 4, 7, 10, 13, and 16
- 18 tone bits replace the last 18 ONEs bits of the IBG

On Half-Wrap Tracks 2, 3, 8, 9, 14, and 15
- 18 tone bits replace the first 18 ONEs bits of the Erase Gap

13.9.4 Erase gap followed by an IBG

On Half-Wrap Tracks 1, 4, 7, 10, 13, and 16
- 18 tone bits replace the first 18 ONEs bits of the IBG

On Half-Wrap Tracks 2, 3, 8, 9, 14, and 15
- 18 tone bits replace the last 18 ONEs bits of the Erase Gap

13.9.5 IBG followed by a Wrap Mark

On Half-Wrap Tracks 4, 6, 10, 12, 16, and 18
- 18 tone bits replace the last 18 ONEs bits of the IBG

On Half-Wrap Tracks 3, 5, 9, 11, 15, and 17
- 18 tone bits replace the first 18 ONEs bits of the Wrap Mark

13.9.6 Wrap mark followed by an IBG

On Half-Wrap Tracks 4, 6, 10, 12, 16, and 18
- 18 tone bits replace the first 18 ONEs bits of the IBG

On Half-Wrap Tracks 3, 5, 9, 11, 15, and 17
- 18 tone bits replace the last 18 ONEs bits of the Wrap Mark

13.9.7 IBG followed by a VOLID mark ONE or ZERO

On Half-Wrap Tracks 1, 4, 7, 10, 13, and 16
- 18 tone bits replace the last 18 ONEs bits of the IBG

On Half-Wrap Tracks 2, 3, 8, 9, 14, and 15
- 18 tone bits replace the first 18 ONEs bits of the VOLID Mark ONE or ZERO

13.9.8 VOLID mark ONE or ZERO followed by an IBG

On Half-Wrap Tracks 1, 4, 7, 10, 13, and 16
- 18 tone bits replace the first 18 ONEs bits of the IBG

On Half-Wrap Tracks 2, 3, 8, 9, 14, and 15
- 18 tone bits replace the last 18 ONEs bits of the VOLID Mark ONE or ZERO

Copyright International Organization for Standardization
Provided by IHS under license with ISO
No reproduction or networking permitted without license from IHS
Not for Resale

13.9.9 Summary of the relationship between interblock gaps, erase gaps, tape marks, and wrap marks

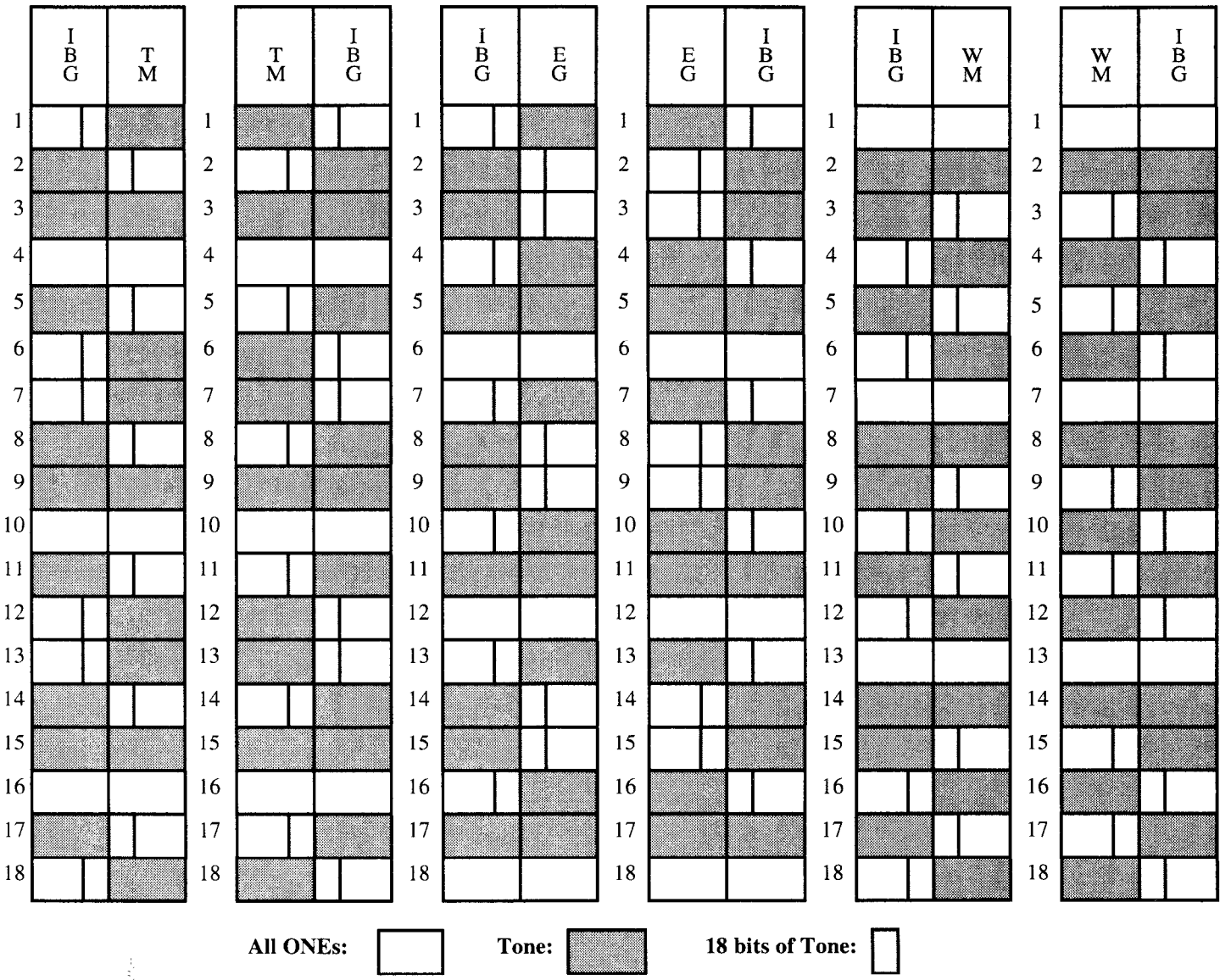

NOTE - VOLID bit/IBG Mark merge is identical to the IBG/EG merge.

Figure 34 - Relationship between gaps and marks

13.10 End of Data Block

The End of Data Block (EOD), after formatting into a Recorded Block, may be written on the tape after the last valid data recorded.

The complete End of Data Block shall consist of 28 bytes.

byte 1

bits 1 to 8 shall be set to 11000000

byte 2

bit 1 shall be set to
ZERO if the EOD is recorded in Half-Wrap 1
ONE if the EOD is recorded in Half-Wrap 2

bits 2 to 8 shall specify the value of a Physical Position Indicator, expressed in binary notation. See annex F for the method of calculation.

Copyright International Organization for Standardization
Provided by IHS under license with ISO
No reproduction or networking permitted without license from IHS
Not for Resale

byte 3	shall be set to all ZEROs
byte 4	
bits 1 and 2	shall be set to XX
bits 3 to 8	shall express the 6 most significant binary digits of the UDR identification. The count shall be set to 0 for the first UDR or Tape Mark following the initial Interblock Gap after the VOLID Mark, if present, or the Density Identification Mark. The count shall be increased by 1 for each UDR, Tape Mark, and End of Data Block.
bytes 5 and 6	shall express the 16 least significant binary digits of the UDR identification.
byte 7	shall be set to 11110000
bytes 8 to 14	shall be set to all ZEROs
byte 15	shall be identical with byte 2
bytes 16 and 17	shall be set to all ONEs
byte 18	shall be set to all 11110000
bytes 19 to 25	shall be set to all ZEROs
byte 26	shall be set to XX110111
bytes 27 and 28	shall comprise a 2-byte Cyclic Redundancy Check (CRC) character computed sequentially over the previous 26 bytes as described in annex E.

where X may be either ZERO or ONE.

13.11 Recording Area

The Recording Area, for both Half-Wraps, shall be bounded by BOT and EOT. LBAP is the Leader Block Attachment Point. EOT shall be at least 4,3 m from the tape to hub junction.

	CST	ECCST
LBAP TO BOT MAXIMUM	1,34 m	6,94 m
LBAP TO HALF-WRAP 1 DATA MINIMUM	3,28 m	7,38 m

Figure 35 - Position of the Recording Area

Copyright International Organization for Standardization
Provided by IHS under license with ISO
No reproduction or networking permitted without license from IHS Not for Resale

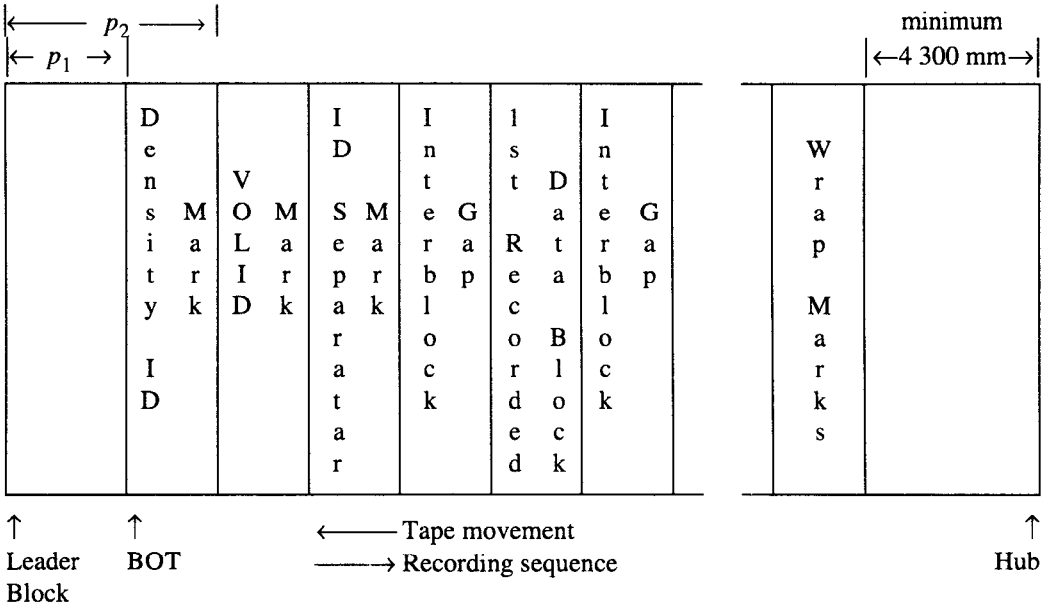

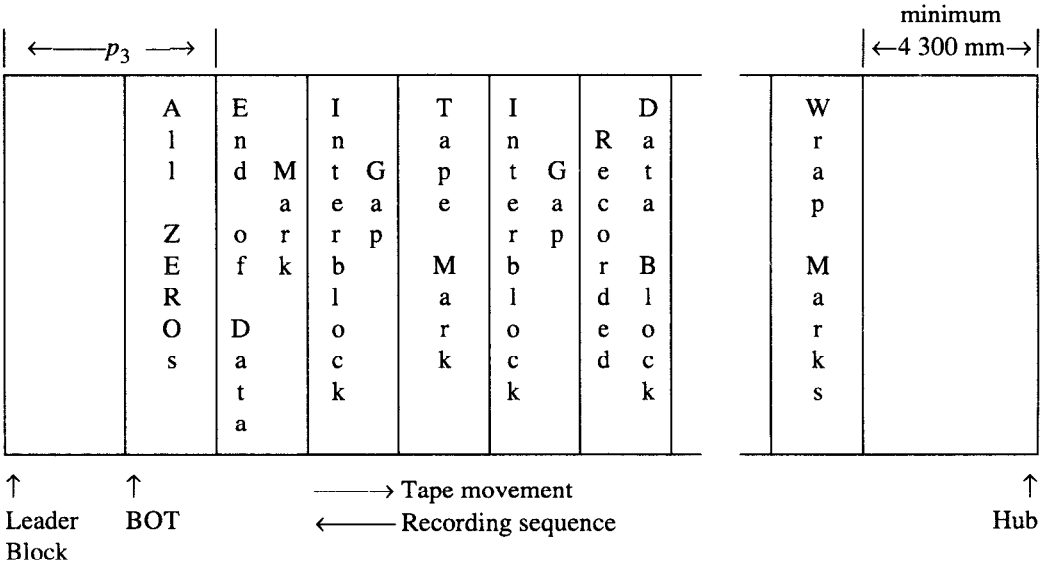

	CST			ECCST		
	minimum	**nominal**	**maximum**	**minimum**	**nominal**	**maximum**
p_1	-	-	1,34 m	-	-	6,94 m
p_2	3,28 m	-	-	7,38 m	-	-
p_3	4,5 m	-	-	8,75 m	-	-

For dimensions of the marks and gaps, see 13.

Figure 36 - Arrangement of recording on tape

Copyright International Organization for Standardization
Provided by IHS under license with ISO
No reproduction or networking permitted without license from IHS
Not for Resale

Annex A
(normative)

Tape abrasivity measurement procedure

A.1 General

Tape abrasivity is the tendency of the tape to wear the tape transport.

A.2 Test fixture

Install a clean ferrite wear bar made as shown in figure C.1 on a holding fixture similar to that shown in figure A.2. The test edge facing upward shall be unworn and free of chips or voids greater than 1 µm in size. The radius of the test edge shall not be greater than 13 µm.

The material of the ferrite bar shall be single-phase polycrystaline ferrite. It shall have the following weight percentages:

ZnO	22 %
NiO	11 %
Fe_2O_3	67 %

Its average grain size shall be 7,2 µm ± 2,0 µm. Its density shall not be less than 5,32 g/cm^3.

NOTE - Such material should be available as "Sumitomo H4R2 or H4R3" from Sumitomo Special Metals Div. in Torrance (California), USA.

The surface finish on all four sides of the bar shall be at least of roughness grade N2 (ISO 1302).

A.3 Procedure

Install the test fixture (see clause C.2) on a tape transport so that the wrap angle of the tape over the bar is 8° on each side for 16° of total wrap.

Set the tape tension at the bar at 1,4 N.

With a tape speed of 1 m/s, make one pass of the tape over the wear bar. The length of tape passing over the wear bar shall be 520,0 m ± 2,5 m. This length may be segmented into the appropriate number of cartridges.

Remove the holding fixture from the transport and measure the length of the flat worn on the wear bar. This measurement is most easily made using a microscope of known magnification, a camera, and a reference reticule. A magnification of 300 or higher is recommended.

Carry out the measurements across the 1/4, 1/2, and 3/4 points of the width of the wear pattern. Take the average length calculated from the three readings. Figure A.3 shows a typical wear pattern and the points of measurements.

Copyright International Organization for Standardization
Provided by IHS under license with ISO
No reproduction or networking permitted without license from IHS
Not for Resale

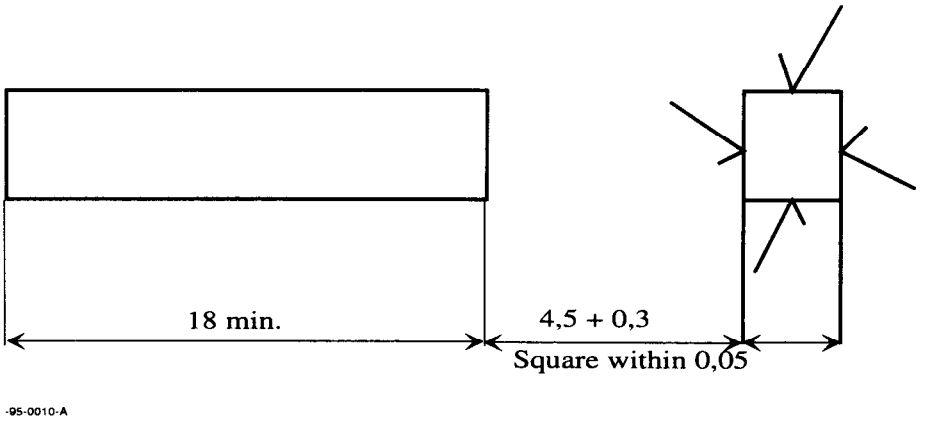

Figure A.1 - Ferrite Wear Bar

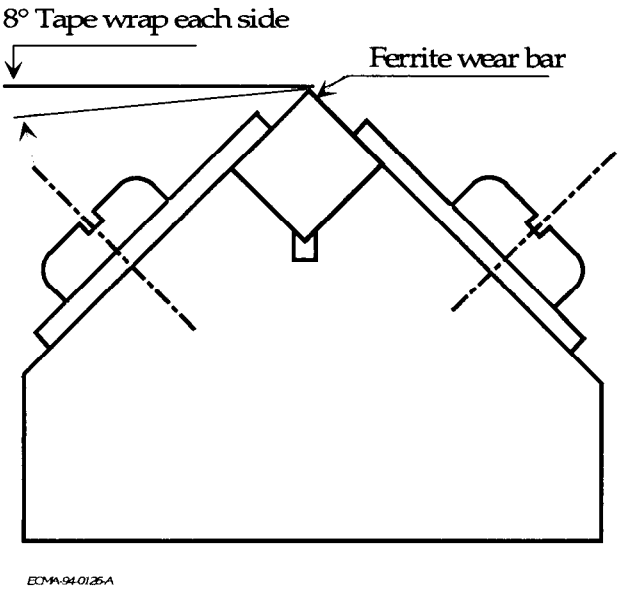

Figure A.2 - Wear Bar Holding Fixture

Copyright International Organization for Standardization
Provided by IHS under license with ISO
No reproduction or networking permitted without license from IHS
Not for Resale

©ISO/IEC

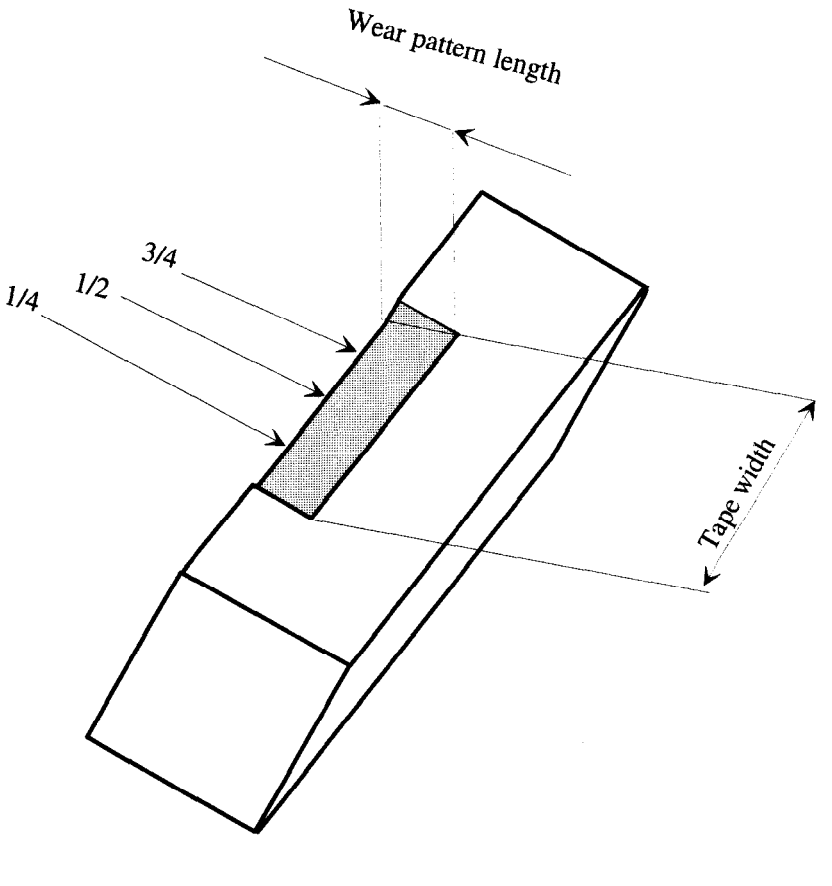

Figure A.3 - Typical Wear Pattern

Ferrite Bar following abrasivity test illustrating three locations for wear length measurement (the amount of wear is exaggerated for clarity).

Copyright International Organization for Standardization
Provided by IHS under license with ISO
No reproduction or networking permitted without license from IHS
Not for Resale

Annex B
(normative)

Pre-recording condition

B.1 Explanation

The pre-recording condition is the remanent magnetic moment of the recording surface. The remanent magnetic moment is the magnetic moment of the recording surface in the absence of any magnetizing field. The maximum remanent magnetic moment of the recording surface is the remanent magnetic moment of the recording surface after subjecting the recording surface to a magnetizing field of 350 kA/m. The recording surface may have been subjected to a high magnetizing field, e.g. during manufacture, during testing, or by use on a magnetic recording system that leaves areas of surface that have been DC erased or contain low density transitions. As the resulting high magnetic moment can impair the operation of the recording system it is necessary to ensure that, before recording, the remanent state has been reduced to, at most, the level specified in 7.19.

B.2 Procedure

The magnetic moment shall be measured using a vibrating sample magnetometer (VSM), following these steps:

1) Cut a circular test piece of diameter 6 mm to 12 mm from the parent tape.

2) Identify the longitudinal (coating) direction of the test piece.

3) Mount the test piece on the VSM test piece holder with the longitudinal direction aligned from pole to pole.

4) Centre the test piece between the poles in accordance with the VSM manufacturer's instructions.

NOTE - Do not expose the test piece to any stray magnetic fields greater than 4 kA/m during preparation or mounting.

5) Measure the remanent magnetic moment of the test piece.

6) Rotate the test piece 180° and repeat steps 4 and 5.

7) Cycle the test piece four times around the hysteresis loop using a peak field of 350 kA/m.

8) Measure the positive and negative values of maximum remanent magnetic moment.

9) Compare the ratio of values obtained in steps 5 and 8.

Copyright International Organization for Standardization
Provided by IHS under license with ISO
No reproduction or networking permitted without license from IHS Not for Resale

Annex C
(normative)

Representation of 8-bit bytes by 9-bit patterns

The 8-bit bytes are shown with the most-significant bit to the left and the least significant bit to the right. The 9-bit patterns are recorded with the leftmost bit first and the rightmost bit last.

8-bit byte	9-bit pattern	8-bit byte	9-bit pattern
00000000	011001011	00101000	101001011
00000001	011001001	00101001	001011001
00000010	001001101	00101010	001011010
00000011	101100011	00101011	001011011
00000100	011001010	00101100	101001010
00000101	101100101	00101101	001011101
00000110	101100110	00101110	001011110
00000111	101100111	00101111	001011111
00001000	011001111	00110000	011100011
00001001	101101001	00110001	001100011
00001010	101101010	00110010	001110010
00001011	101101011	00110011	001110011
00001100	011001110	00110100	010100011
00001101	101101101	00110101	001110101
00001110	101101110	00110110	001110110
00001111	101101111	00110111	001110111
00010000	001001011	00111000	111100011
00010001	001001001	00111001	001111001
00010010	011001101	00111010	001111010
00010011	100100011	00111011	001111011
00010100	001001010	00111100	110100011
00010101	100100101	00111101	001111101
00010110	100100110	00111110	001111110
00010111	100100111	00111111	001111111
00011000	001001111	01000000	010001011
00011001	100101001	01000001	010001001
00011010	100101010	01000010	010010010
00011011	100101011	01000011	010010011
00011100	001001110	01000100	010001010
00011101	100101101	01000101	010010101
00011110	100101110	01000110	010010110
00011111	100101111	01000111	010010111
00100000	101001111	01001000	010001111
00100001	101001101	01001001	010011001
00100010	001010010	01001010	010011010
00100011	001010011	01001011	010011011
00100100	101001110	01001100	010001110
00100101	001010101	01001101	010011101
00100110	001010110	01001110	010011110
00100111	001010111	01001111	010011111

Copyright International Organization for Standardization
Provided by IHS under license with ISO
No reproduction or networking permitted without license from IHS
Not for Resale

8-bit byte	9-bit pattern
01010000	011100101
01010001	001100101
01010010	010110010
01010011	010110011
01010100	010100101
01010101	010110101
01010110	010110110
01010111	010110111
01011000	111100101
01011001	010111001
01011010	010111010
01011011	010111011
01011100	110100101
01011101	010111101
01011110	010111110
01011111	010111111
01100000	011100110
01100001	001100110
01100010	011010010
01100011	011010011
01100100	010100110
01100101	011010101
01100110	011010110
01100111	011010111
01101000	111100110
01101001	011011001
01101010	011011010
01101011	011011011
01101100	110100110
01101101	011011101
01101110	011011110
01101111	011011111
01110000	011100111
01110001	001100111
01110010	011110010
01110011	011110011
01110100	010100111
01110101	011110101
01110110	011110110
01110111	011110111
01111000	111100111
01111001	011111001
01111010	011111010
01111011	011111011
01111100	110100111
01111101	011111101
01111110	011111110
01111111	011111111
10000000	111001011
10000001	111001001
10000010	100010010
10000011	100010011

8-bit byte	9-bit pattern
10000100	111001010
10000101	100010101
10000110	100010110
10000111	100010111
10001000	111001111
10001001	100011001
10001010	100011010
10001011	100011011
10001100	111001110
10001101	100011101
10001110	100011110
10001111	100011111
10010000	011101001
10010001	001101001
10010010	100110010
10010011	100110011
10010100	010101001
10010101	100110101
10010110	100110110
10010111	100110111
10011000	111101001
10011001	100111001
10011010	100111010
10011011	100111011
10011100	110101001
10011101	100111101
10011110	100111110
10011111	100111111
10100000	011101010
10100001	001101010
10100010	101010010
10100011	101010011
10100100	010101010
10100101	101010101
10100110	101010110
10100111	101010111
10101000	111101010
10101001	101011001
10101010	101011010
10101011	101011011
10101100	110101010
10101101	101011101
10101110	101011110
10101111	101011111
10110000	011101011
10110001	001101011
10110010	101110010
10110011	101110011
10110100	010101011
10110101	101110101
10110110	101110110
10110111	101110111

Copyright International Organization for Standardization
Provided by IHS under license with ISO
No reproduction or networking permitted without license from IHS
Not for Resale

8-bit byte	9-bit pattern
10111000	111101011
10111001	101111001
10111010	101111010
10111011	101111011
10111100	110101011
10111101	101111101
10111110	101111110
10111111	101111111
11000000	110001011
11000001	110001001
11000010	110010010
11000011	110010011
11000100	110001010
11000101	110010101
11000110	110010110
11000111	110010111
11001000	110001111
11001001	110011001
11001010	110011010
11001011	110011011
11001100	110001110
11001101	110011101
11001110	110011110
11001111	110011111
11010000	011101101
11010001	001101101
11010010	110110010
11010011	110110011
11010100	010101101
11010101	110110101
11010110	110110110
11010111	110110111
11011000	111101101
11011001	110111001
11011010	110111010
11011011	110111011
11011100	110101101
11011101	110111101
11011110	110111110
11011111	110111111
11100000	011101110
11100001	001101110
11100010	111010010
11100011	111010011
11100100	010101110
11100101	111010101
11100110	111010110
11100111	111010111
11101000	111101110
11101001	111011001
11101010	111011010
11101011	111011011
11101100	110101110
11101101	111011101
11101110	111011110
11101111	111011111
11110000	011101111
11110001	001101111
11110010	111110010
11110011	111110011
11110100	010101111
11110101	111110101
11110110	111110110
11110111	111110111
11111000	111101111
11111001	111111001
11111010	111111010
11111011	111111011
11111100	110101111
11111101	111111101
11111110	111111110
11111111	111111111

Copyright International Organization for Standardization
Provided by IHS under license with ISO
No reproduction or networking permitted without license from IHS
Not for Resale

Annex D
(normative)

Measurement of bit shift

The equipment normally used for recording interchange cartridges shall be used for recording the tape under test.

The tape shall be in the pre-recording condition.

D.1 Read equipment

The tape shall be read on any tape transport in which the speed is within 1 % of nominal speed.

There are no absolute requirements on the output voltage from the read head. However, the head design and the tape speed should be chosen to avoid problems from low signal-to-noise ratios.

- Read head:

Inductive head, the gap length shall be less than 0,63 µm.

Magneto resistive head, the effective read gap, calculated from the geometric mean of the distances from the element to each shield, should be less than 0,63 µm.

The azimuth alignment of the read head gap and the mean flux transition line of the written track shall be less than 9' of arc.

- Read channel. The frequency response of the head and read amplifier shall meet the following specification when tested with a wire placed close to and parallel to the read gap.

For an inductive head, the overall response shall be within 1 dB from a +6 dB/octave line over the frequency range corresponding to one twentieth of the ONEs frequency to 2,0 times the ONEs frequency. For example, a tape transport operated at 762 mm/s would require a frequency range of 18,5 kHz to 740,7 kHz. The phase response shall be within 2° of a straight line over the same frequency range.

For a magneto resistive head, the overall response shall be within 1 dB of flat over the above frequency range and the phase response shall be within 2° of a straight line over the same frequency range.

Response of either read channel shall roll off at 18 dB/octave starting at 2,0 times the ONEs frequency.

D.2 Measurement

The average bit cell length (L) is obtained from any pair of reference zero crossings (RZC) located on either side of the test zero crossing (TZC). A reference zero crossing is a ONE zero crossing with at least two adjacent ONE zero crossings on each side. The reference zero crossings shall not be more than 40 bit cells apart to keep the maximum error due to rate of change under 2 %.

Copyright International Organization for Standardization
Provided by IHS under license with ISO
No reproduction or networking permitted without license from IHS
Not for Resale

D.3 Data analysis

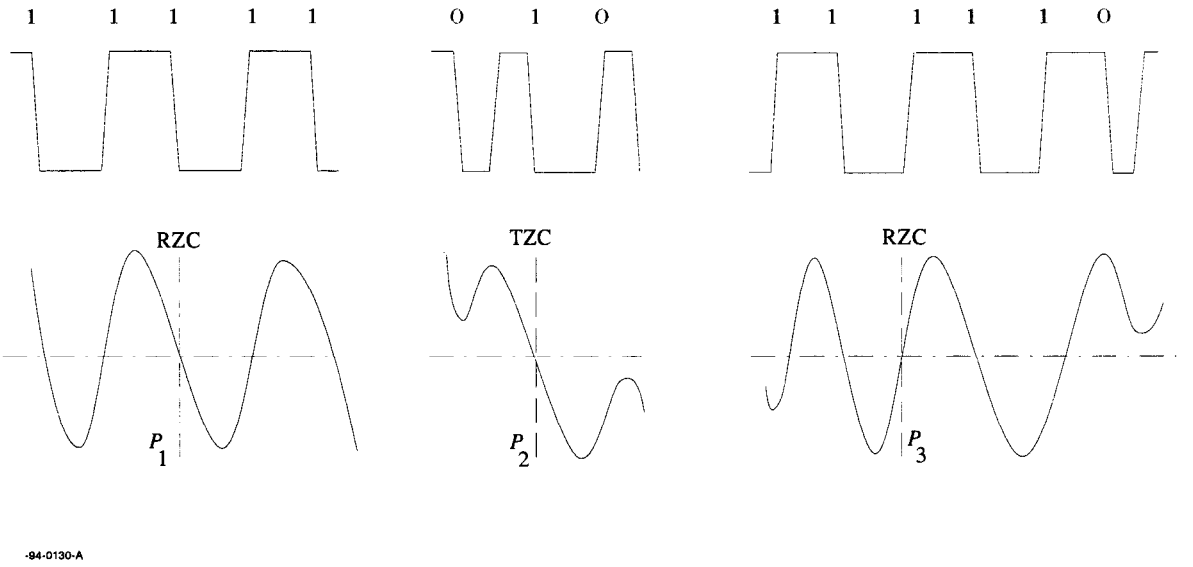

-94-0130-A

where: RZC is a reference zero crossing
TZC is the test zero crossing
P_n is the position of the n-th ONEs zero crossing.

If n is the number of bit cells between reference zero crossings, the average bit cell length is:

$$L = \frac{P_3 - P_1}{n}$$

If there are m bit intervals between the first reference zero crossing and the test zero crossing then:

$$\text{Bit shift} = \frac{\left| m L - (P_2 - P_1) \right|}{L} \times 100\%$$

Copyright International Organization for Standardization
Provided by IHS under license with ISO
No reproduction or networking permitted without license from IHS
Not for Resale

Annex E
(normative)

Implementation of a CRC

E.1 Description

Each CRC shall consist of 16 bits and be represented by two bytes, CRC 1 and CRC 2.

E.2 Computation

The CRC shall be computed from the generator polynomial

$x^{16} + x^{15} + x^8 + x + 1$

Figure E.1 shows a shift register representation.

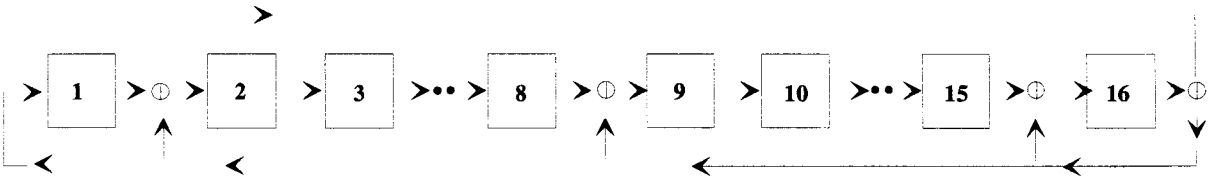

Where ⊕ indicates modulo 2 addition.

Figure E.1 - Shift register representation

Prior to the computation all positions of the shift register shall be set to ZERO.

The bits within the byte shall be processed starting with bit 8, the least significant bit, and ending with bit 1, the most significant bit.

E.3 Allocation of bits to CRC 1 and CRC 2

On completion of the computation the bits in the shift register shall be allocated to the bit positions in the two CRC bytes as follows:

	CRC byte 1	CRC byte 2
Bit in the shift register	9 to 16	1 to 8

Figure E.2 - Allocation of bits to CRC 1 and CRC 2

Copyright International Organization for Standardization
Provided by IHS under license with ISO
No reproduction or networking permitted without license from IHS
Not for Resale

Annex F
(normative)

Calculation of a physical position indicator

F.1 Description

Physical Position Indicators (PPIs) are used to provide a coarse, fast indication of the location of the data along the length of the tape without the necessity for reading the data or all the Block ID bytes.

F.2 Calculation

At any point along the length of the tape the value of a PPI shall be:

and rounded up to the next higher positive integer

$$62{,}5\left(\frac{\sqrt{625+R_o^2-R^2}}{R}-\frac{25}{R_o}\right)$$

where:

R_o is the radius of the fully loaded reel of tape in millimetres

R is the current radius of the reel of tape in millimetres.

F.3 Requirement

The value shall lie in the range of

$$1 \le \text{PPI} \le 95$$

Copyright International Organization for Standardization
Provided by IHS under license with ISO
No reproduction or networking permitted without license from IHS Not for Resale

Annex G
(normative)

Media Type Label

This annex provides information on the optional Media Type Label. Whilst this label is optional, its use is strongly recommended and, if used, shall conform to the dimensions defined in G.1.

G.1 Letter

The letter shall be E. It shall conform to the requirements of figure G.2, where

T = 0,787 mm ± 0,127 mm
H = 5,613 mm ± 0,127 mm
W = 3,150 mm ± 0,127 mm

The centrelines of the letter, at 1/2 H and 1/2 W, shall coincide with the horizontal and vertical centrelines for the letter shown in figure G.1.

G.2 Bar code

The bar code shall be the 3 of 9 bar code for the letter E, taken from ANSI MH 10.8M.1983. The bar code shall be printed with the first bit of the code towards the bottom of the label and the last bit towards the top of the label.

The width of narrow spaces and bars shall be 0,737 mm ± 0,127 mm.

The width of the wide spaces and bars shall be 1,437 mm ± 0,127 mm.

The maximum value of the width of a bar shall be measured to the outside of the edge roughness. The width of a space shall be the distance between such maxima.

The minimum value of the width of a bar shall be measured to the inside of the edge roughness.

G.3 Custom stop code

The bar code shall be followed by a 2 of 4 stop code shown in figure M.1.

G.4 Reflectivity

Measurements of the reflectivity of the white and black areas shall be made using the Macbeth PCM II Print Contrast Meter, or equivalent.

G.4.1 White areas

G.4.1.1 Reflectivity

The reflectivity of white areas, RW, shall be

55 % ≤ RW ≤ 75 %

It shall be measured in the centre of narrow spaces, avoiding isolated print defects and edge roughness.

G.4.1.2 Spots

A spot is defined as an area in the white area in which the reflectivity is less than 55 %. No spot shall have a diameter greater than 0.20 mm. There shall be no more than five spots per label. No two spots shall be within 0,51 mm of each other.

G.4.2 Black areas

G.4.2.1 Print contrast signal

The reflectivity of black areas shall be measured anywhere within any black area, avoiding print defects and edge roughness. The print contrast signal, PCS, is defined as

Copyright International Organization for Standardization
Provided by IHS under license with ISO
No reproduction or networking permitted without license from IHS Not for Resale

$$PCS = \frac{RW - RB}{RW}$$

The minimum value shall be 0,85.

G.4.2.2 Voids

A void is defined as an area within the black in which the PCS is less than 0,85. No void shall have a diameter greater than 0,20 mm. There shall be no more than one void per bar of an OCR character and no more than five voids in the entire label. No two voids shall be within 0,51 mm of each other.

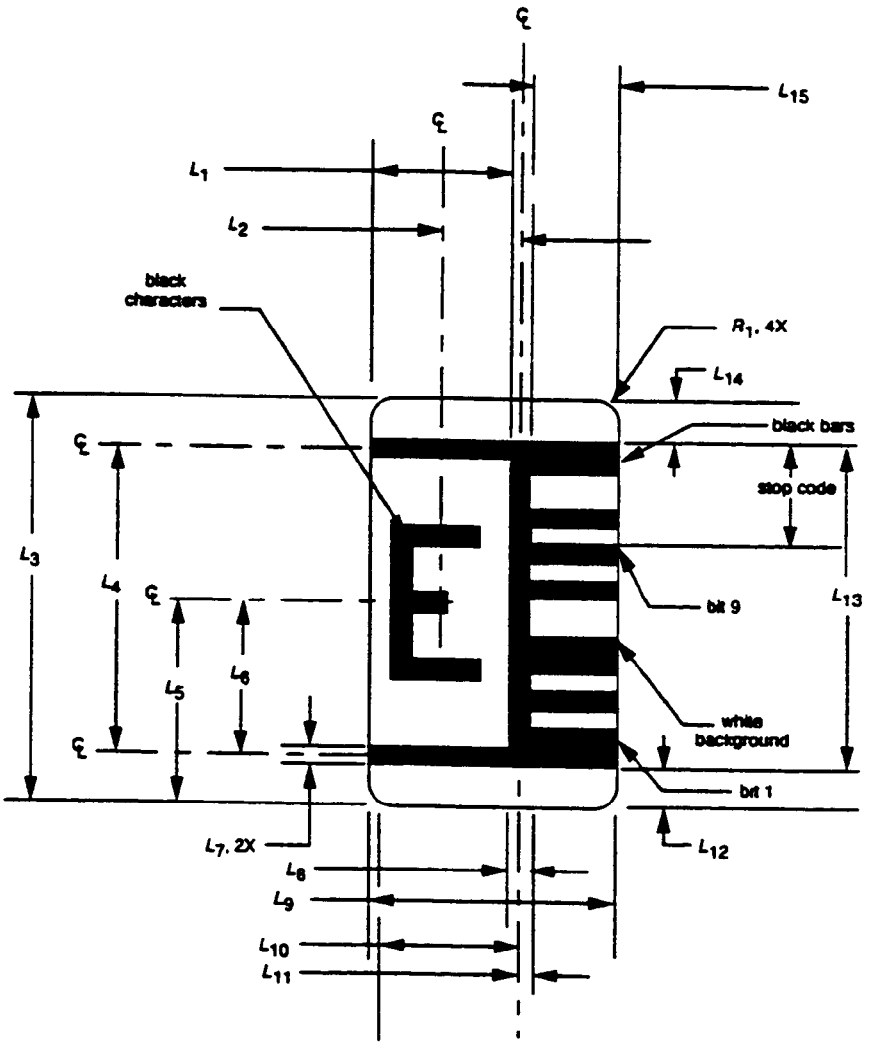

Figure G.1 - Description of label for Media Type Label

Copyright International Organization for Standardization
Provided by IHS under license with ISO
No reproduction or networking permitted without license from IHS
Not for Resale

Table G.1 - Dimensions of the bar code label

	SI unit (mm)	
Symbol	**Dimension**	**Tolerance**
L_1	5,59	0,51
L_2	3,25	0,13
L_3	16,51	0,25
L_4	12,70	0,13
L_5	8,255	0,127
L_6	6,35	0,13
L_7	0,76	0,13
L_8	0,76	0,13
L_9	9,80	+0,51 -1,02
L_{10}	5,21	0,13
L_{11}	0,38	0,13
L_{12}	1,65	0,51
L_{13}	13,26	0,13
L_{14}	1,143	+0,508 -0,000
L_{15}	3,45	0,51
R_1	1,52	0,13

Copyright International Organization for Standardization
Provided by IHS under license with ISO
No reproduction or networking permitted without license from IHS
Not for Resale

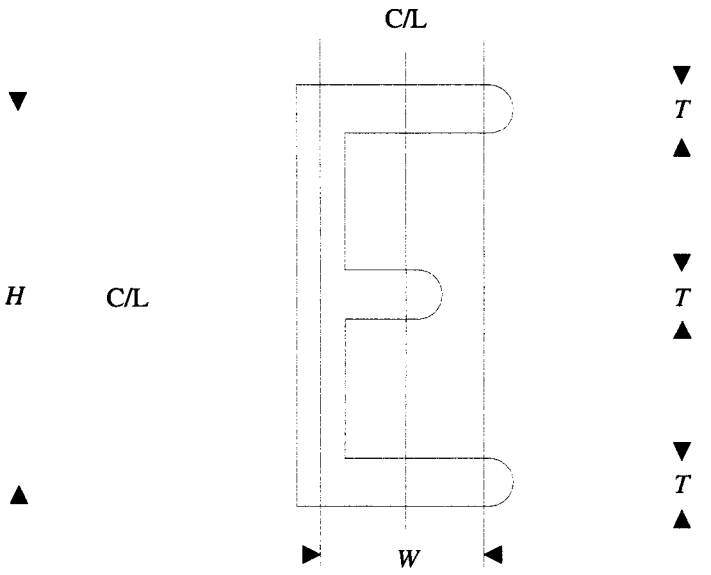

Figure G.2 - Data character

Copyright International Organization for Standardization
Provided by IHS under license with ISO
No reproduction or networking permitted without license from IHS
Not for Resale

Annex H
(informative)

Recommendations for transportation

H.1 Environment

It is recommended that during transportation, the cartridges are kept within the following conditions.

H.1.1 Unrecorded cartridges

temperature:	-23 °C to 48 °C
relative humidity:	5 % to 100 %
wet bulb temperature:	26 °C max.
duration:	10 consecutive days max.

There shall be no condensation in or on the cartridge

H.1.2 Recorded cartridges

temperature:	5 °C to 32 °C
relative humidity:	5 % to 80 %
wet bulb temperature:	26 °C max.

There shall be no condensation in or on the cartridge

H.2 Hazards

Transportation of recorded cartridges involves three basic potential hazards.

H.2.1 Impact loads and vibration

The following recommendations should minimize damage during transportation.

Avoid mechanical loads that would distort the cartridge shape.

Avoid dropping the cartridge more than 1 m.

Cartridges should be fitted into a rigid box containing adequate shock absorbent material.

The final box should have a clean interior and a construction that provides sealing to prevent the ingress of dirt and water.

The orientation of the cartridges within the final box should be such that their axes are horizontal.

The final box should be clearly marked to indicate its correct orientation.

H.2.2 Extremes of temperature and humidity

a) Extreme changes in temperature and humidity should be avoided whenever possible.

b) Whenever a cartridge is received it should be conditioned in the operating environment for a period of at least 24 h.

H.2.3 Effects of stray magnetic fields

A nominal spacing of not less than 80 mm should exist between the cartridge and the outer surface of the shipping container. This should minimize the risk of corruption.

Copyright International Organization for Standardization
Provided by IHS under license with ISO
No reproduction or networking permitted without license from IHS Not for Resale

Annex J
(informative)

Inhibitor cartridge

Any cartridge that reduces the performance of the tape drive, automation product, or other tapes is called an Inhibitor Cartridge. Certain tape characteristics can contribute to poor tape drive performance. These characteristics include: high abrasiveness, high static friction to tape path components, poor edge conditions, excessive tape wear debris, interlayer slippage, transfer of oxide coating to the back of the next tape layer, separation of tape constituents causing deposits that may lead to tape sticking of poor performance of other tapes. Tapes that have these characteristics may not give satisfactory performance and can result in excessive errors.

Certain cartridge features can inhibit the proper operation of the automation products, including

- gripping surfaces that jam picker mechanisms
- gripping surfaces that reduce contact between the cartridge and the cartridge loading mechanism

The cartridge should not be an inhibitor cartridge. Tapes to be used in this cartridge should not be Inhibitor Tapes.

Copyright International Organization for Standardization
Provided by IHS under license with ISO
No reproduction or networking permitted without license from IHS
Not for Resale

Annex K
(informative)

Recommendations on tape durability

When delivered from the supplier the tape of a new cartridge should meet the following requirements.

Testing and measurements performed on the cartridge using an appropriate drive are described below. The test must be performed in the operating environment for the tape (see 6.2) and the tape drive.

K.1 Short length durability/reliability

K.1.1 The short-length durability/reliability is the ability of the tape to withstand the wearing action encountered during repeated access to a short file of data. A permanent missing pulse is one that persists for ten consecutive read passes.

K.1.2 No permanent Coincident Missing Pulse Zones are permitted for a minimum of 40 000 read passes. In addition, no more than one permanent Coincident Missing Pulse Zone is permitted on the average for each 80 000 read passes.

K.1.3 Procedure

Ensure the tape drive is clean before starting this test.

As a test sample, use a minimum of four cartridges, written in the area of the tape free of Coincident Missing Pulse Zones. The area to be tested on each cartridge should start approximately 10 m or 500 records of 25 000 bytes each past the tape load point. The test area should consist of 1 m or 50 such records.

Each test cycle consists of starting at the beginning of the test area and accessing each record in the test area before returning to the beginning of the test area. For a complete test, 80 000 cycles should be made on each cartridge. Ten attempts to read in the same direction should be made for each Coincident Missing Pulse Zone before a permanent Coincident Missing Pulse Zone is logged.

K.2 Long length durability/reliability

K.2.1 The long length durability/reliability is the ability of the tape to resist the wearing action encountered while cycling full-length passes on a tape drive. This is not a test for end of life for the tape.

K.2.2 The cartridges should meet the following requirements.

a) The number of Coincident Missing Pulse Zones for the first 200 full length passes should not be more than 6 per pass.

b) No full length of tape should have more than 12 Coincident Missing Pulse Zones on any single pass.

K.2.3 Procedure

Clean the tape drive before starting this test. Tape path cleaning between passes is not permitted for this test. The whole length of tape should be written continuously or with records of at least 16 000 bytes.

Copyright International Organization for Standardization
Provided by IHS under license with ISO
No reproduction or networking permitted without license from IHS Not for Resale

Annex L
(informative)

Summary of data flow

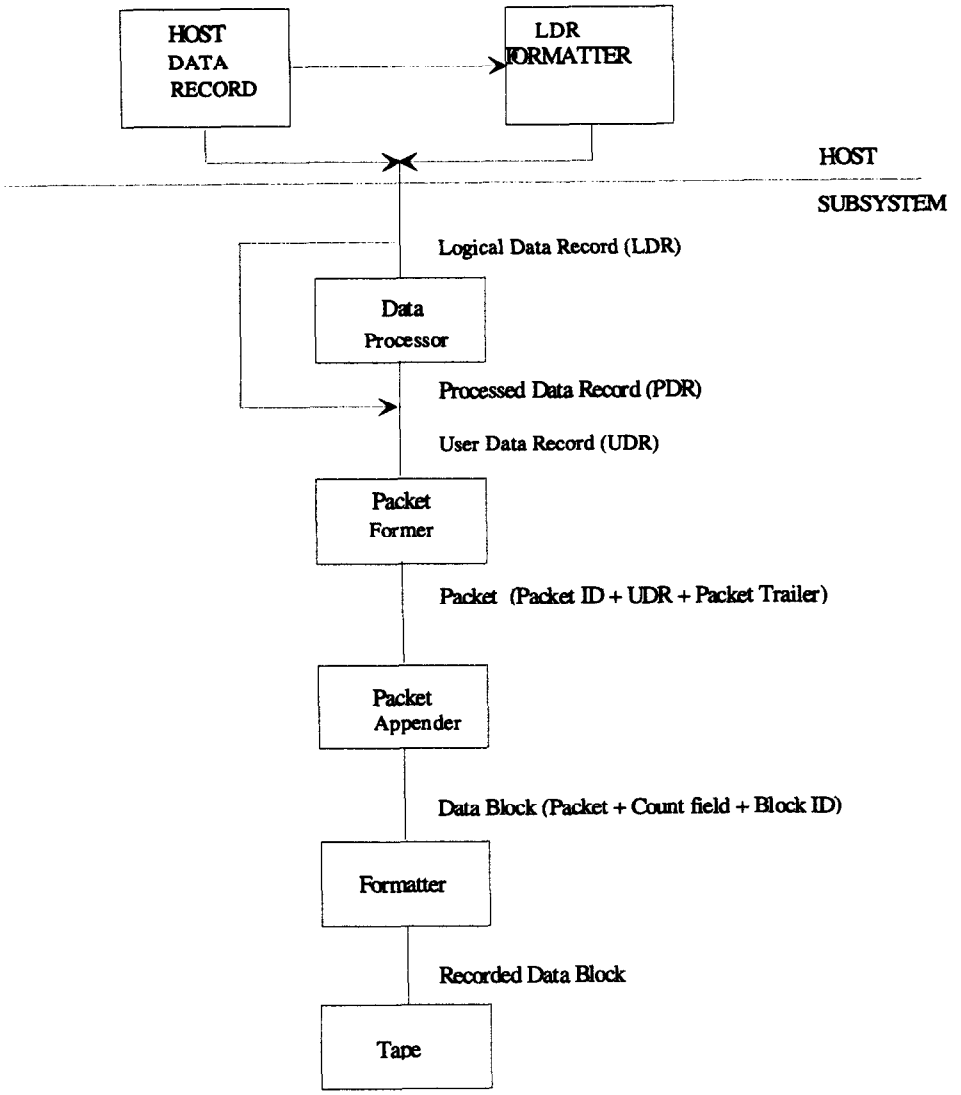

Copyright International Organization for Standardization
Provided by IHS under license with ISO
No reproduction or networking permitted without license from IHS
Not for Resale

Annex M
(informative)

Accelerated life test

The objective of the accelerated life test is to demonstrate the long-term stability of the magnetic coating of the tape. Storage under extreme environmental conditions and testing, using application typical operation but under elevated environmental conditions, simulate the typical life span of the product.

M.1 Requirement

There shall be no permanent read or write errors and the tape shall not become an inhibitor tape (see annex B) either during or after the test.

M.2 Procedure

M.2.1 The accelerated life test is performed using a group of 10 cartridges, all free of permanent errors.

M.2.2 Environmental conditioning

a) Store the cartridges at a temperature in the range of 47 °C to 49 °C and a relative humidity in the range of 18 % to 22 % for 21 days.

b) Allow the cartridges to acclimatize in the test environment (see 6.1) for at least 24 h and re-tension the tape by spooling it back and forth between BOT and EOT.

c) Place the test hardware and the 10 cartridges in a test chamber maintained at 30 °C ± 2 °C and a relative humidity in the range of 83 % to 87 %. Acclimatize for at least 24h.

M.2.3 Test cycle

M.2.3.1 Write cycle

Write Data Blocks of 32 768 8-bit bytes on the cartridge from BOT to EOT in the forward direction only and rewind the tape to the BOT.

M.2.3.2 Start/stop cycles

a) Locate to Data Block 50 and read the next 100 Data Blocks in start/stop mode.

b) Locate to Data Block 3 050 and read the next 100 Data Blocks in start/stop mode.

c) Locate to Data Block 6 050 and read the next 100 Data Blocks in start/stop mode.

d) Rewind the tape to BOT.

e) Repeat a) to d) four times.

M.2.3.3 Read cycle

Read the cartridge from BOT to EOT using the streaming mode.

M.2.3.4 Repeat steps M.2.3.1 to M.2.3.3 on the remaining 9 cartridges.

M.2.3.5 Run a cleaning cartridge once.

M.2.4 Repeat step M.2.3 nine additional times.

M.2.5 Repeat steps M.2.2 to M.2.4 two additional times using the same group of 10 cartridges selected in step M.2.1.

Copyright International Organization for Standardization
Provided by IHS under license with ISO
No reproduction or networking permitted without license from IHS Not for Resale

© ISO/IEC

ICS 35.220.20

Descriptors: data processing, information interchange, data recording, magnetic recording, data recording devices, magnetic tapes, half-inch magnetic tapes, magnetic tape cartridges, specifications, dimensions, mechanical properties, physical properties, magnetic properties, formats, track formats, interchangeability.

Price based on 71 pages

Copyright International Organization for Standardization
Provided by IHS under license with ISO
No reproduction or networking permitted without license from IHS

Not for Resale