INTERNATIONAL STANDARD

ISO/IEC 14169

First edition
1995-09-15

Information technology — 90 mm flexible disk cartridges for information interchange — 21 MBytes formatted capacity — ISO Type 305

Technologies de l'information — Cartouches à disquette de 90 mm *pour l'échange d'information — Capacité formatée de 21 MB — Type ISO 305*

Reference number
ISO/IEC 14169:1995(E)

Copyright International Organization for Standardization
Provided by IHS under license with ISO
No reproduction or networking permitted without license from IHS

Not for Resale

Contents

		page
Foreword		
Introduction		
Section 1 - General		**1**
1	**Scope**	**1**
2	**Conformance**	**1**
2.1	Flexible disk cartridge	**1**
2.2	Generating systems	**1**
2.3	Receiving systems	**1**
3	**Normative references**	**1**
4	**Definitions**	**1**
4.1	Average Signal Amplitude	**1**
4.2	case	**1**
4.3	Data Sector	**2**
4.4	Data Track	**2**
4.5	direction of rotation	**2**
4.6	disk	**2**
4.7	Error Correcting Code (ECC)	**2**
4.8	Error Detecting Code (EDC)	**2**
4.9	flux transition frequency	**2**
4.10	hub	**2**
4.11	index	**2**
4.12	Inner Zone	**2**
4.13	input bit	**2**
4.14	Line of Access of the head	**2**
4.15	liner	**2**

© ISO/IEC 1995

All rights reserved. Unless otherwise specifed, no part of this publication may be reproduced or utilized in any form or by any means, electronic or mechanical, including photocopying and microfilm, without permission in writing from the publisher.

ISO/IEC Copyright Office · Case postale 56 · CH-1211 Genève 20 · Switzerland

Printed in Switzerland

Copyright International Organization for Standardization
Provided by IHS under license with ISO
No reproduction or networking permitted without license from IHS Not for Resale

4.16	Master Standard Reference Flexible Disk Cartridge	2
4.17	Outer Zone	2
4.18	peak value	2
4.19	Primary Identification hole	2
4.20	Reference Field	2
4.21	Secondary Identification hole	2
4.22	Secondary Standard Reference Flexible Disk Cartridge	2
4.23	Sector Block	2
4.24	sector servo	3
4.25	Servo Sector	3
4.26	Servo Track	3
4.27	shutter	3
4.28	Side	3
4.29	Standard Reference Amplitude	3
4.30	Standard Reference Current	3
4.31	Test Recording Current	3
4.32	Typical Field	3
4.33	write-inhibit hole	3
5	**Conventions and Notations**	3
5.1	Representation of numbers	3
5.2	Names	3
6	**Acronyms**	4
7	**General description**	4
7.1	Drawings	4
7.2	Main elements	4
7.3	Description	4
7.4	Marking of the FDC	4
Section 2 - Environments, mechanical and physical characteristics		4
8	**General requirements**	4
8.1	Environment, transportation and safety	4
8.1.1	Testing environment	4
8.1.2	Operating environment	5
8.1.3	Storage environment	5
8.1.4	Transportation	5
8.1.5	Safety	5
8.2	Materials	5
8.2.1	Case	5
8.2.2	Liner	5
8.2.3	Disk	5
8.2.4	Hub	5

Copyright International Organization for Standardization
Provided by IHS under license with ISO
No reproduction or networking permitted without license from IHS Not for Resale

9	**Dimensional characteristics**	**6**
9.1	Case	**6**
9.1.1	Shape	**6**
9.1.2	Thickness	**6**
9.1.3	Hub access hole	**6**
9.1.4	Locating hole	**6**
9.1.5	Label area	**7**
9.1.6	Head windows	**7**
9.1.7	Write-inhibit hole	**8**
9.1.8	Identification holes	**8**
9.1.9	Profile of the shutter edge of the case	**8**
9.1.10	Shutter	**9**
9.2	Liner	**9**
9.3	Disk	**9**
9.3.1	Diameter	**9**
9.3.2	Thickness	**9**
9.4	Hub	**9**
9.4.1	Dimensions	**9**
9.4.2	Hub orientation holes	**10**
9.5	Optional handling notches	**10**
9.6	Interface between cartridge and drive	**11**
9.7	Compliance	**11**
10	**Physical characteristics**	**11**
10.1	Flammability	**11**
10.2	Coefficient of linear thermal expansion of the disk	**11**
10.3	Coefficient of linear hygroscopic expansion of the disk	**11**
10.4	Torque	**11**
10.4.1	Starting torque	**11**
10.4.2	Running torque	**11**
Section 3 - Requirements for the unrecorded disk		**12**
11	**Magnetic recording characteristics**	**12**
11.1	Recording area	**12**
11.2	Track geometry	**12**
11.2.1	Number of tracks	**12**
11.2.2	Track number	**12**
11.2.3	Width of Data Tracks	**12**
11.2.4	Data Track location	**12**
11.3	Functional testing	**13**
11.3.1	Test conditions	**13**
11.3.2	Typical Field	**13**

Copyright International Organization for Standardization
Provided by IHS under license with ISO
No reproduction or networking permitted without license from IHS Not for Resale

11.3.3	Average Signal Amplitude	**14**
11.3.4	Resolution	**14**
11.3.5	Peak shift	**14**
11.3.6	Overwrite	**14**
11.3.7	Modulation	**14**
11.4	Track quality tests	**14**
11.4.1	Missing pulse	**14**
11.4.2	Extra pulse	**15**
11.4.3	Requirement for tracks	**15**
11.4.4	Rejected cartridge	**15**
Section 4 - Requirements for the interchanged disk		**15**
12	**Recording of Data Tracks**	**15**
12.1	Method of recording	**15**
12.2	Tolerances of the track locations	**15**
12.3	Recording offset angle	**16**
12.4	Density of recording	**16**
12.4.1	Nominal density of recording	**16**
12.4.2	Long-term average Channel bit cell length	**16**
12.4.3	Short-term average Channel bit cell length	**16**
12.5	Flux transition spacing	**16**
12.6	Average Signal Amplitude	**17**
12.7	Byte	**17**
12.8	Data Sector	**17**
12.9	Cylinder	**17**
12.10	Cylinder number	**17**
12.11	Data capacity of a track	**17**
12.12	Hexadecimal notation	**18**
13	**Disk layout**	**18**
13.1	Layout of a Data Sector	**20**
13.1.1	Compensation field	**20**
13.1.2	Sector Identifier	**20**
13.1.3	Identifier Gap	**21**
13.1.4	Data Block	**21**
13.1.5	Data Block Gap	**22**
13.1.6	Defective Data Sector	**22**
13.2	Data Tracks	**22**
13.2.1	Data Tracks for the user	**23**
13.2.2	Data Tracks for the management of defective Data Sectors	**23**
13.2.3	Data Tracks for servo recovery	**23**
13.3	Coded representation of data	**23**

Copyright International Organization for Standardization
Provided by IHS under license with ISO
No reproduction or networking permitted without license from IHS
Not for Resale

14	**General requirements for recording Servo Tracks**	**23**
14.1	Method of recording	**23**
14.2	Servo Tracks	**23**
14.2.1	Number of Servo Tracks	**23**
14.2.2	Width of Servo Tracks	**23**
14.2.3	Servo Track location	**24**
14.3	Average Signal Amplitude of servo data	**24**
14.4	Displacement due to fluctuations of signal amplitude of servo data	**24**
15	**Layout of the Servo Track**	**24**
15.1	Layout of the Servo Sector	**25**
15.1.1	Servo Identifier	**26**
15.1.2	Servo data	**26**
16	**Relative position of Data Tracks and Servo Tracks**	**27**

Annexes

A - Cartridge distortion test gauge	**33**
B - Measurement of light transmittance	**34**
C - Test for compliance	**37**
D - Method for measuring the effective track width	**40**
E - Head and read amplifier for functional testing	**42**
F - Method of measuring peak shift	**43**
G - Method for measuring overwrite	**46**
H - Procedure and equipment for measuring flux transition spacing	**47**
J - Handling of defective Data Sectors	**49**
K - Method for measuring the eccentricity of Servo Tracks	**50**
L - Method of measuring the offset between Data Tracks and Servo Tracks	**51**
M - Torque measurements	**52**
N - Data separators for decoding 2-7 RLL recording	**53**
P - EDC Implementation	**54**
Q - ECC Implementation	**56**
R - Servo Track recording conditions	**57**
S - Method for measuring the displacement of the head due to amplitude fluctuations of servo data	**58**
T - Institute supplying Secondary Standard Reference Flexible Disk Cartridges	**60**

Copyright International Organization for Standardization
Provided by IHS under license with ISO
No reproduction or networking permitted without license from IHS Not for Resale

Foreword

ISO (the International Organization for Standardization) and IEC (the International Electrotechnical Commission) form the specialized system for worldwide standardization. National bodies that are members of ISO or IEC participate in the development of International Standards through technical committees established by the respective organization to deal with particular fields of technical activity. ISO and IEC technical committees collaborate in fields of mutual interest. Other international organizations, governmental and non-governmental, in liaison with ISO and IEC, also take part in the work.

In the field of information technology, ISO and IEC have established a joint technical committee, ISO/IEC JTC1. Draft International Standards adopted by the joint technical committee are circulated to national bodies for voting. Publication as an International Standard requires approval by at least 75 % of the national bodies casting a vote.

International Standard ISO/IEC 14169 was prepared by the Japanese Industrial Standards Committee (as Standard JIS X 6228 - 1994) with document support and contribution from ECMA and was adopted, under a special "fast-track procedure" by Joint Technical Committee ISO/IEC JTC1, *Information technology*, in parallel with its approval by national bodies of ISO and IEC.

Annexes A to L form an integral part of this International Standard. Annexes M to T are for information only.

Copyright International Organization for Standardization
Provided by IHS under license with ISO
No reproduction or networking permitted without license from IHS
Not for Resale

Introduction

This International Standard specifies the characteristics of 90 mm flexible disk cartridges of 21 MBytes formatted capacity, recorded at 31 831 ftprad in the Inner Zone and 47 747 ftprad in the Outer Zone with sector servo tracking on 326 Data Tracks on each side, using 2-7 RLL recording.

This International Standard specifies the physical interchangeability of the unrecorded disk and the format interchangeability of recorded Data Tracks and Servo Tracks.

In reference to ISO/IEC 9983, flexible disk cartridges conforming to this International Standard are designated as ISO Type 305.

Copyright International Organization for Standardization
Provided by IHS under license with ISO
No reproduction or networking permitted without license from IHS
Not for Resale

Information technology - 90 mm flexible disk cartridges for information interchange - 21 MBytes formatted capacity - ISO Type 305

Section 1 - General

1 Scope

This International Standard specifies the characteristics of 90 mm flexible disk cartridges (FDC) of 21 Mbytes formatted capacity, recorded at 31 831 ftprad in the Inner Zone and 47 747 ftprad in the Outer Zone with sector servo tracking on 326 data tracks on each side, using 2-7 RLL recording.

It specifies the mechanical, physical and magnetic characteristics of the cartridge, so as to provide physical interchangeability between data processing systems.

It also specifies the method of recording, the quality of recorded signals, the track layouts and the track formats of Data Tracks and Servo Tracks.

Such flexible disk cartridges are identified as ISO Type 305.

Together with a standard for volume and file structure, for instance ISO/IEC 9293, this International Standard provides for full data interchange between data processing systems.

2 Conformance

2.1 Flexible disk cartridge

A 90 mm flexible disk cartridge shall be in conformance with this International Standard if it meets all the mandatory requirements specified herein.

2.2 Generating systems

A system generating an FDC for interchange shall be entitled to claim conformance with this International Standard if all recordings on the flexible disk meet the mandatory requirements of this International Standard.

2.3 Receiving systems

A system receiving an FDC for interchange shall be entitled to claim full conformance with this International Standard if it is able to handle any recording made on the flexible disk according to this International Standard.

3 Normative references

The following standards contain provisions which, through reference in this text, constitute provisions of this International Standard. At the time of publication, the editions indicated were valid. All standards are subject to revision, and parties to agreements based on this International Standard are encouraged to investigate the possibility of applying the most recent editions of the standards indicated below. Members of IEC and ISO maintain registers of currently valid International Standards.

ISO 683-13: 1986, *Heat-treatable steels, alloy steels and free-cutting steels - Part 13: Wrought stainless steels.*

ISO/IEC 9293:1994, *Information technology - Volume and file structure of disk cartridges for information interchange.*

ISO/IEC 9983:1995, *Information technology - Designation of unrecorded flexible disk cartridges.*

IEC 950:1991, *Safety of information technology equipment, including electrical business equipment.*

4 Definitions

For the purposes of this International Standard, the following definitions apply.

4.1 **Average Signal Amplitude:** The Average Signal Amplitude for a track is the arithmetically averaged value of the output voltages measured peak-to-peak over the whole track.

4.2 **case:** A protective enclosure including a shutter mechanism, identification holes and a write-inhibit hole.

Copyright International Organization for Standardization
Provided by IHS under license with ISO
No reproduction or networking permitted without license from IHS
Not for Resale

4.3 **Data Sector:** A sector comprising a Sector Identifier and a Data Block.

4.4 **Data Track:** A track on which data are recorded on Data Sectors.

4.5 **direction of rotation:** The direction of rotation shall be counter-clockwise when looking at Side 0.

4.6 **disk:** A flexible disk which accepts and retains, on the specified side or sides, magnetic signals intended for input/output and storage purposes.

4.7 **Error Correcting Code (ECC):** A mathematical procedure yielding bits used for the detection and correction of errors.

4.8 **Error Detecting Code (EDC):** A mathematical procedure yielding bits used for the detection of errors.

4.9 **flux transition frequency:** The number of flux transition per second (ftps).

NOTE 1 - In this International Standard, the frequencies to be used in the Outer Zone are indicated by the subscript OZ, those to be used in the Inner Zone are indicated by the subscript IZ (see 11.3.1.1).

4.10 **hub:** A centring and referencing device attached to the disk which allows torque to be transmitted to the disk. The hub is attached to the centre of the disk. It ensures centring of the disk on the drive shaft in a unique angular position.

4.11 **index:** The signal generated in the index transducer of the drive by the drive spindle once per revolution.

4.12 **Inner Zone:** The inner subdivision of the recording area of a surface of the disk.

4.13 **input bit:** Bits which represent input data.

4.14 **Line of Access of the head:** The straight line described by the centre of the gap of the read/write head when positioned from Track -004 to Track 328.

4.15 **liner:** Suitable material between the case and the disk to provide cleaning action and protection from abrasion.

4.16 **Master Standard Reference Flexible Disk Cartridge:** A flexible disk cartridge selected as the standard for Reference Fields, signal amplitudes, resolution, peak shift, and overwrite. Tracks 000 and 325 are declared as Reference Tracks.

The reference tracks are calibrated at 600 rpm.

NOTE 2 - This Master Standard has been established at the Reliability Centre for Electronic Components of Japan (RCJ), 1-1-12 Hachiman-cho, Higashikurume-shi, Tokyo 203, Japan.

4.17 **Outer Zone:** The outer subdivision of the recording area of a surface of the disk.

4.18 **peak value:** The zero to crest value of the output voltage of the read head.

4.19 **Primary Identification hole:** A through-hole provided on the case to identify the FDC specified by this International Standard.

4.20 **Reference Field:** The Typical Field of the Master Standard Reference Flexible Disk Cartridge. There are two Reference Fields, one for each side.

4.21 **Secondary Identification hole:** An identification hole provided on Side 0 of the case to identify the FDCs specified by this International Standard.

4.22 **Secondary Standard Reference Flexible Disk Cartridge:** A flexible disk cartridge the performance of which is known and stated in relation to that of the Master Standard Reference Flexible Disk Cartridge.

NOTE 3 - Secondary Standard Reference Flexible Disk Cartridges can be ordered under part number JRM 6228 from the Reliability Centre for Electronic Components of Japan (RCJ), 1-1-12 Hachiman-cho, Higashikurume-shi, Tokyo 203, Japan until the year 2004. (see annex T).

It is intended that these be used for calibrating tertiary reference disks for use in routine calibration.

4.23 **Sector Block:** A block consisting of a Servo Sector followed by either two or three Data Sectors, and a Sector Block Gap.

Copyright International Organization for Standardization
Provided by IHS under license with ISO
No reproduction or networking permitted without license from IHS Not for Resale

4.24 **sector servo:** A method of position control, whereby head positioning information is recorded at the beginning of each Sector Block.

4.25 **Servo Sector:** A sector which has a Servo Identifier and servo data.

4.26 **Servo Track:** A track on which Servo Sectors are permanently recorded.

4.27 **shutter:** A device which uncovers the head windows upon insertion of the cartridge into a drive, and automatically covers them upon removal from the drive.

4.28 **Side:** Side 0 is the side engaged by the spindle. Side 1 is the opposite side.

4.29 **Standard Reference Amplitude:** The Standard Reference Amplitudes (SRAs) are the Average Signal Amplitudes derived from the reference tracks of the Master Standard Reference Flexible Disk Cartridge using the Test Recording Current.

There are four SRAs, two for each side (see 11.3.1.1):

SRA1 is the Average Signal Amplitude from a recording written using $3f_{OZ}$ at Track 000.
SRA2 is the Average Signal Amplitude from a recording written using $8f_{IZ}$ at Track 325.

4.30 **Standard Reference Current:** The current that produces the Reference Field.

4.31 **Test Recording Current:** The current the relationship of which to the Standard Reference Current is defined for each zone and for each flux transition frequency.

4.32 **Typical Field:** In the plot of the Average Signal Amplitude against the Recording Field at a specified recording density, the minimum field that causes an Average Signal Amplitude equal to 95% of the maximum Average Signal Amplitude.

4.33 **write-inhibit hole:** A through-hole with a sliding cover, provided on the case to inhibit writing on the disk when the hole is uncovered.

5 Conventions and Notations

5.1 Representation of numbers

- A measured value is rounded off to the least significant digit of the corresponding specified value. It implies that a specified value of 1,26 with a positive tolerance of +0,01, and a negative tolerance of -0,02 allows a range of measured values from 1,235 to 1,275.
- Letters and digits in parentheses represent numbers in hexadecimal notation.
- The setting of a bit is denoted by ZERO or ONE.
- Numbers in binary notation and bit combinations are represented by strings of ZEROs and ONEs.
- Numbers in binary notation and bit combinations are shown with the most significant byte to the left, and with the most significant bit in each byte to the left.
- Negative values of numbers in binary notation are given in TWO's complement.
- In each field the data is processed so that the most significant byte (byte 1) is processed first. Within each byte the least significant bit, numbered B_1, is processed last, the most significant bit, numbered B_8, is processed first. This order of processing applies also to the data input to the Error Detecting and Correcting circuits and to their output.

5.2 Names

The names of entities, e.g. specific tracks, fields, etc., are given with a capital initial.

Copyright International Organization for Standardization
Provided by IHS under license with ISO
No reproduction or networking permitted without license from IHS Not for Resale

6 Acronyms

ECC	Error Correcting Code
EDC	Error Detecting Code
FFT	Fast Fourier Transform
LED	Light Emitting Diode
SRA	Standard Reference Amplitude
SVDT	Servo data
SVIDA	Servo Identifier A
SVIDB	Servo Identifier B
2-7 RLL	2-7 Run Length Limited (code)

7 General description

7.1 Drawings

In the enclosed drawings:

Figure 11 shows Side 0 and enlarged cross-sections through the Location and Secondary Identification holes;

Figure 12 shows Side 1;

Figure 13 shows at a larger scale the top part of Side 0 without shutter;

Figures 14, 15 show the disk with hub;

Figure 16 shows the interface between the cartridge and the drive.

7.2 Main elements

The main elements of the flexible disk cartridge are

- the disk,
- the liner,
- the case.

7.3 Description

The case is of a substantially square form. It includes a central hole on one side, head windows covered by a shutter on both sides, identification holes and a write-inhibit hole.

The liner is provided between the case and the disk. It comprises two layers of material between which the disk lies. The disk has a central hole with a metal hub attached.

7.4 Marking of the FDC

It is recommended that the case be clearly marked with the ISO Type No. ISO 305 of the FDC.

Section 2 - Environments, mechanical and physical characteristics

8 General requirements

8.1 Environment, transportation and safety

8.1.1 Testing environment

Tests and measurements made on the cartridge to check the requirements of this International Standard shall be carried out under the following conditions:ISO

temperature:	23 °C ± 2 °C
relative humidity:	40 % to 60 %
conditioning before testing:	24 h min.

Copyright International Organization for Standardization
Provided by IHS under license with ISO
No reproduction or networking permitted without license from IHS Not for Resale

For the tests specified in 11.3 the temperature and relative humidity shall be measured in the air immediately surrounding the cartridge drive. For all other tests the temperature and the relative humidity shall be measured in the air immediately surrounding the cartridge. The stray magnetic field at any point on the disk surface, including that resulting from the concentrating effect of the magnetic head, shall not exceed 4 000 A/m.

8.1.2 Operating environment

Cartridges used for data interchange shall be capable of operating under the following conditions:

temperature:	10 °C to 51,5 °C
relative humidity:	20 % to 80 %
wet bulb temperature:	less than 29 °C

The temperature and the relative humidity shall be measured in the air immediately surrounding the cartridge. It is recommended that the rate of change of the temperature should not exceed 20 °C per h.

There shall be no deposit of moisture on or in the cartridge.

The stray magnetic field at any point on the disk surface, including that resulting from the concentrating effect of the magnetic head, shall not exceed 4 000 A/m.

8.1.3 Storage environment

During storage the cartridges shall be kept within the following conditions:

temperature:	4 °C to 53 °C
relative humidity:	8 % to 90 %

The ambient stray magnetic field shall not exceed 4 000 A/m. There shall be no deposit of moisture on or in the cartridge.

NOTE 4 - Cartridges which have been stored at temperatures and humidities exceeding the operating conditions may exhibit degraded performance characteristics. Such cartridges should be subjected to a conditioning period of not less than 24 h within the operating environment prior to use.

8.1.4 Transportation

Responsibility for ensuring that adequate precautions are taken during the transportation shall be with the sender. The cartridge shall be in a protective package free from dust or extraneous matter. It is recommended that a sufficient space exists between cartridge and outer surface of the final container, so that risk of erasure due to stray magnetic fields will be negligible.

It is recommended that the following conditions are not exceeded:

temperature:	- 40 °C to 60 °C
maximum rate of temperature change:	20 °C per h
relative humidity:	8 % to 90 %

There should be no deposit of moisture on or in the cartridge.

8.1.5 Safety

The flexible disk cartridge and its components shall satisfy the requirements of IEC 950.

8.2 Materials

8.2.1 Case

The case may be constructed from any suitable material such that it meets the requirements of 9.7.

8.2.2 Liner

The material of the liner shall be able to retain dust or debris without damage to the disk.

8.2.3 Disk

The disk may be constructed from any suitable material (e.g. bi-axially oriented polyethylene terephthalate) coated on both sides with a flexible layer of magnetic material (e.g. metal particles).

8.2.4 Hub

The hub shall be made of any suitable material (e.g. stainless steel alloy according to ISO 683-13, type 8).

Copyright International Organization for Standardization
Provided by IHS under license with ISO
No reproduction or networking permitted without license from IHS Not for Resale

9 Dimensional characteristics

9.1 Case

The dimensions of the cartridge are referred to two Reference Axes X and Y. They are two lines in space intersecting at right angles. The plane they define is the Reference Plane XY of the cartridge (figures 11 and 12).

9.1.1 Shape

The case has a rectangular form, its sides shall be

$$l_1 = 94{,}0 \text{ mm} \pm 0{,}3 \text{ mm}$$

$$l_2 = 90{,}0 \text{ mm}^{+0{,}4}_{-0{,}1} \text{ mm}$$

The radius of three of its corners shall be

$$r_1 = 2{,}0 \text{ mm} \pm 1{,}0 \text{ mm}$$

The angle of its fourth corner shall be

$$\omega = 45° \pm 2°$$

9.1.2 Thickness (figure 12)

In the area extending 8,5 mm from each of the two edges as shown in figure 12, the thickness of the case shall be

$$e_1 = 3{,}3 \text{ mm} \pm 0{,}2 \text{ mm}$$

When the cartridge is inserted in the test gauge specified in annex A, a force of 0,2 N maximum, applied to the centre of the back edge shall cause the cartridge to pass through the gauge.

The edge radius shall be

$$r_2 = 0{,}40 \text{ mm} \pm 0{,}25 \text{ mm}$$

9.1.3 Hub access hole (figure 11)

On Side 0 there shall be a hub access hole, the diameter of which shall be

$$d_1 = 26{,}50 \text{ mm min.}$$

The position of the centre of this hole shall be defined by

$$l_3 = 40{,}00 \text{ mm} \pm 0{,}15 \text{ mm}$$

$$l_4 = 31{,}00 \text{ mm} \pm 0{,}15 \text{ mm}$$

9.1.4 Locating holes (figures 11 and 13)

9.1.4.1 Primary Locating hole

The centre of the Primary Locating hole shall be at the intersection of Reference Axes X and Y.

Its diameter shall be

$$d_2 = 3{,}6 \text{ mm} \pm 0{,}1 \text{ mm}$$

The dimensions of its section (see cross-section A-A in figure 11) shall be

$$d_3 = 1{,}5 \text{ mm min.}$$

$$l_8 = 0{,}2 \text{ mm} \pm 0{,}1 \text{ mm}$$

$$l_9 = 1{,}0 \text{ mm min.}$$

$$l_{10} = 2{,}5 \text{ mm min.}$$

Copyright International Organization for Standardization
Provided by IHS under license with ISO
No reproduction or networking permitted without license from IHS Not for Resale

9.1.4.2 Secondary Locating hole

The centre of the Secondary Locating hole shall be on Reference Axis X, its distance from Reference Axis Y shall be

$l_5 = 80{,}0 \text{ mm} \pm 0{,}2 \text{ mm}$

It shall have a substantially rectangular shape. Its short axis shall be (see cross-section B-B in figure 11)

$l_6 = 3{,}6 \text{ mm} \pm 0{,}1 \text{ mm}$

Its long axis shall be

$l_7 = 4{,}4 \text{ mm} \pm 0{,}2 \text{ mm}$

The dimensions d_3, l_8, l_9 and l_{10} of the cross-section of the Secondary Locating hole are as specified in 9.1.4.1.

9.1.5 Label area

9.1.5.1 Side 0 (figure 11)

The locations and dimensions of the label area of Side 0 shall be defined by

$l_{11} = 3{,}5 \text{ mm min.}$

$l_{12} = 76{,}5 \text{ mm max.}$

$l_{14} = 60{,}0 \text{ mm min.}$

9.1.5.2 Side 1 (figure 12)

The locations and dimensions of the label area of Side 1 shall be defined by

$l_{11} = 3{,}5 \text{ mm min.}$

$l_{12} = 76{,}5 \text{ mm max.}$

$l_{13} = 20{,}0 \text{ mm min.}$

9.1.6 Head windows (figure 13)

The locations and dimensions of the two head windows are specified by the same set of dimensions.

9.1.6.1 Location

The location of the head windows shall be defined by

$l_{15} = 12{,}3 \text{ mm min.}$

$l_{16} = 11{,}5 \text{ mm min.}$

$l_{17} = 35{,}5 \text{ mm} \pm 0{,}2 \text{ mm}$

9.1.6.2 Dimensions

The width of the head windows shall be

$l_{18} = 9{,}00 \text{ mm} \pm 0{,}20 \text{ mm}$

The radius of their corners shall be

$r_3 = 0{,}5 \text{ mm} \pm 0{,}1 \text{ mm}$

$r_4 = 0{,}5 \text{ mm} \pm 0{,}1 \text{ mm}$

Copyright International Organization for Standardization
Provided by IHS under license with ISO
No reproduction or networking permitted without license from IHS
Not for Resale

9.1.7 Write-inhibit hole (figures 11 and 12)

The write-inhibit hole is intended for use either with a mechanical switch or with an optical detector so that only when the hole is covered is writing on the disk possible. When covered, the closure device shall not extend outside the Reference Plane nor shall it deflect by more than 0,3 mm from the Reference Plane inside the case under the action of a force of 3 N.

Also when covered, the light transmittance of the write-inhibit hole area shall not exceed 1 %, when measured with an optical system such as described in annex B.

NOTE 5 - The position of write-inhibit hole is reversed compared with that of the cartridges specified by ISO 8860, ISO 9529 and ISO/IEC 10994 ; and it agrees with the position specified in ISO/IEC 13422.

9.1.7.1 Location

The centre of the write-inhibit hole shall be specified by l_5 and

$l_{19} = 67{,}75 \text{ mm} \pm 0{,}25 \text{ mm}$

9.1.7.2 Dimensions

The dimensions of the write-inhibit hole shall be

$l_{49} = 3{,}5 \text{ mm min.}$

$l_{50} = 4{,}0 \text{ mm min.}$

9.1.8 Identification holes (figures 11 to 13)

The Identification holes are provided to distinguish between the FDC according to this International Standard from those specified by ISO 8860, ISO 9529, ISO/IEC 10994 and ISO/IEC 13422.

NOTE 6 - As the Secondary Identification hole is not a through-hole, it is recommended that the Identification holes be detected by mechanical means.

9.1.8.1 Primary Identification hole

The position of the centre of the Primary Identification hole shall be on Reference Axis Y. Its distance from Reference Axis X shall be specified by l_{19}.

The dimensions of the Primary Identification hole shall be

$l_{20} = 3{,}5 \text{ mm min.}$

$l_{21} = 4{,}0 \text{ mm min.}$

9.1.8.2 Secondary Identification hole

The position of the centre of the Secondary Identification hole shall be

$l_{60} = 7{,}50 \text{ mm} \pm 0{,}15 \text{ mm}$

$l_{61} = 69{,}0 \text{ mm} \pm 0{,}2 \text{ mm}$

Its diameter shall be

$d_{10} = 3{,}5 \text{ mm min.}$

The dimensions of its section (see cross-section C-C in figure 11) shall be specified by l_8 and

$l_{62} = 2{,}5 \text{ mm min.}$

9.1.9 Profile of the shutter edge of the case (figures 11 and 13)

The edge on which the shutter is mounted shall have a profile defined by the following dimensions:

$l_{22} = 80{,}0 \text{ mm} \pm 0{,}2 \text{ mm}$

$l_{23} = 76{,}0 \text{ mm} \pm 0{,}3 \text{ mm}$

$l_{24} = 68{,}0 \text{ mm} \pm 0{,}3 \text{ mm}$

$l_{25} = 64{,}50 \text{ mm} \pm 0{,}35 \text{ mm}$

$l_{26} = 57{,}00 \text{ mm} \pm 0{,}35 \text{ mm}$

Copyright International Organization for Standardization
Provided by IHS under license with ISO
No reproduction or networking permitted without license from IHS Not for Resale

l_{27} = 55,5 mm ± 0,6 mm
l_{28} = 3,5 mm min.
l_{29} = 17,5 mm ± 0,2 mm
l_{30} = 17,00 mm ± 0,15 mm
l_{31} = 15,50 mm ± 0,25 mm
l_{45} = 12,50 mm ± 0,25 mm
α = 45° ± 2°
β = 135° ± 2°

9.1.10 Shutter (figures 12 and 13)

The shutter shall slide upon insertion of the cartridge into the drive so as to uncover the head windows, and close automatically upon removal. The maximum resistance force at the fully open position shall be 1 N, and the minimum resistance force at the fully closed position shall be 0,2 N.

The path along which the shutter can slide is defined by l_{25} and l_{28}.

In the open position of the shutter, the distance from its leading edge to the Reference Axis Y shall be

l_{32} = 53,75 mm ± 1,25 mm

The width of the windows of the shutter shall be

l_{33} = 12,0 mm ± 0,2 mm

NOTE 7 - It is a requirement that the drive shall provide a mechanism whereby correct insertion of the cartridge into the drive causes the shutter to slide so as to uncover the head windows.

9.2 Liner

No part of the liner shall protrude by more than 0,2 mm into the head access windows.

9.3 Disk (figures 14 and 15)

9.3.1 Diameter

The diameter of the disk shall be

d_4 = 85,8 mm ± 0,2 mm

9.3.2 Thickness

The thickness of the disk shall be

e_2 = 0,067 mm ± 0,008 mm

9.4 Hub (figures 14 and 15)

The hub shall have a central part and a flange.

9.4.1 Dimensions

The diameter of the central part shall be

$d_5 = 25{,}00 \text{ mm} \begin{smallmatrix} +\,0{,}00 \\ -\,0{,}15 \end{smallmatrix} \text{ mm}$

The diameter of the flange shall be

d_6 = 29,50 mm max.

The distance from the surface of the central part of the hub to the surface of Side 0 of the disk shall be

l_{34} = 1,36 mm ± 0,10 mm

when measured at a radius r_7

r_7 = 14 mm nominal

Copyright International Organization for Standardization
Provided by IHS under license with ISO
No reproduction or networking permitted without license from IHS Not for Resale

9.4.2 Hub orientation holes (figures 14 and 15)

The hub shall have two orientation holes. The first one at its centre, the second off-centre.

9.4.2.1 Primary Orientation hole

The Primary Orientation hole shall have a square form defined by

l_{35} = 4,0 mm min.

The position of the centre of rotation of the disk is defined by

l_{36} = 1,995 5 mm

measured from two sides of the hole. The centre of rotation shall be within 0,5 mm of the geometric centre of the disk. The radius of the four corners of this hole shall be

r_5 = 1,0 mm ± 0,3 mm

The angles of two sides of the hole which are in contact with the spindle shaft shall be

$\delta = 90° \begin{matrix} +1° \\ -0° \end{matrix}$

9.4.2.2 Secondary Orientation hole

The position and dimensions of the sides of the rectangular Secondary Orientation hole are referred to two radial Reference Lines A and B that are perpendicular to each other. Their positions shall be specified by

γ = 15° ± 3°

The length of the sides of this hole shall be

l_{37} = 8,0 mm ± 0,3 mm

l_{38} = 4,5 mm min.

These sides shall be parallel to Reference Lines A and B, respectively, at a distance:

l_{39} = 2,0 mm ± 0,2 mm

l_{40} = 10,00 mm ± 0,15 mm

The radius of one corner of this hole shall be

r_6 = 2,0 mm ± 0,1 mm

The radius of the three other corners shall be

r_5 = 1,0 mm ± 0,3 mm

9.5 Optional handling notches (figures 11 and 12)

Two handling notches are permitted. If present they shall satisfy the following requirements. Their centres shall be on a line parallel to, and lying above, Reference Axis X at a distance

l_{41} = 7,50 mm ± 0,15 mm

Their dimensions shall be

l_{42} = 3,0 mm min.

l_{43} = 4,2 mm ± 0,2 mm

Their depth below the Reference Plane XY shall be

l_{44} = 2,0 mm min.

Copyright International Organization for Standardization
Provided by IHS under license with ISO
No reproduction or networking permitted without license from IHS Not for Resale

9.6 Interface between cartridge and drive (figure 16)

When the cartridge is inserted into the drive, the drive spindle engages the cartridge as shown in figure 16. The hub is held against the drive spindle by means of a magnetic attraction force. When in this position the distance between the hub surface on Side 0 and Reference Plane XY shall be

l_{46} = 0,3 mm nominal

The inside dimensions of the case with the centre plate on Side 1 shall be

d_7 = 7,0 mm min.

e_3 = 1,3 mm ± 0,1 mm

with the exception of the annular zone defined by l_{47} and l_{48} where the thickness shall be

e_4 = 2,5 mm max.

l_{47} shall be sufficiently large to ensure that the circumference of the disk shall not touch the inside edges of the case. The value of l_{47} specified below is a recommended value therefore it is stated without tolerance.

l_{47} = 22,6 mm

l_{48} = 21,7 mm ± 0,2 mm

9.7 Compliance

When the cartridge is constrained in the manner described in annex C, the cartridge shall be in contact with posts P1 to P4.

10 Physical characteristics

10.1 Flammability

The disk, case and liner components shall be made from materials that, if ignited from a match flame, do not continue to burn in a still carbon dioxide atmosphere.

10.2 Coefficient of linear thermal expansion of the disk

The coefficient of thermal expansion of the disk shall be

$(17 \pm 8) \times 10^{-6}$ per degree Celsius

The range from maximum value to minimum value on the disk surface shall be

8×10^{-6} per degree Celsius max.

10.3 Coefficient of linear hygroscopic expansion of the disk

The coefficient of hygroscopic expansion of the disk shall be

$(0 \text{ to } 15) \times 10^{-6}$ per percent of relative humidity.

The range from maximum value to minimum value on the disk surface shall be

5×10^{-6} per percent of relative humidity max.

10.4 Torque

10.4.1 Starting torque

The starting torque, without the heads loaded, shall not exceed 0,006 Nm (see annex M).

10.4.2 Running torque

The torque necessary to turn the disk,without the heads loaded, shall be in the range 0,000 5 Nm to 0,002 5 Nm (see annex M).

Copyright International Organization for Standardization
Provided by IHS under license with ISO
No reproduction or networking permitted without license from IHS Not for Resale

Section 3 - Requirements for the unrecorded disk

11 Magnetic recording characteristics

11.1 Recording area

On each side the magnetic properties specified shall be uniform in the recording area, which shall be the area limited by two radii:

20,6 mm max.

42,0 mm min.

11.2 Track geometry

11.2.1 Number of tracks

In the recording area there shall be 342 concentric tracks of which 326 contain user data on each side of the disk.

11.2.2 Track number

The track number shall be a three-digit number identifying the tracks consecutively, starting at the outermost track (figure 9).

11.2.2.1 Data Tracks

Data Tracks shall be numbered from -004, the outermost Data Track, to 328, the innermost Data Track.

11.2.2.2 Servo Tracks

Servo Tracks shall be numbered from -10,5 , the outermost Servo Track, to 330,5 , the innermost Servo Track.

11.2.3 Width of Data Tracks

The width of a recorded track shall be

0,044 mm ± 0,003 mm

The method of measuring effective track width is given in D.1 of annex D.

11.2.4 Data Track location

11.2.4.1 Nominal locations

The nominal radius (Rn_D) of the centrelines of the Data Tracks shall be calculated by using the formula:

$$Rn_D = x - 0{,}046\,875\ n_D$$

where

n_D is the track number, n_D = -004 to 328
x = 39,875 mm for Side 0
x = 38,375 mm for Side 1

11.2.4.2 Track location tolerance

For testing purposes the centrelines of the recorded tracks shall be within 0,050 mm of the nominal positions, when measured in the testing environment (8.1.1). The nominal distance between centrelines of adjacent tracks shall be 0,046 875 mm, and its tolerance shall be ±0,010 mm.

11.2.4.3 Line of Access of the heads

The Line of Access of the heads shall be a line parallel to a radial line and spaced 0,35 mm from it (see 12.3).

11.2.4.4 Zone of tracks

The tracks of the disk are grouped into two zones: an Outer Zone and an Inner Zone. The innermost track of the Outer Zone constitutes the boundary between the two zones. On Side 0, it is Track 112, on Side 1, it is Track 080.

Copyright International Organization for Standardization
Provided by IHS under license with ISO
No reproduction or networking permitted without license from IHS Not for Resale

11.3 Functional testing

For the purposes of the following tests the same drive unit shall be used for writing and reading operations, both for the disk under test and for the Secondary Standard Reference Flexible Disk Cartridge.

The in-contact condition shall be used.

Unless otherwise specified, tests shall be performed on both sides.

11.3.1 Test conditions

The magnetic properties of both surfaces are defined by the testing requirements given below.

11.3.1.1 Flux transition frequency

Two test frequencies, expressed in flux transitions per second (ftps), shall be used in each zone. In the Outer Zone:

$8f_{OZ}$ = 3 000 000 ftps ± 3 000 ftps
$3f_{OZ}$ = 1 125 000 ftps ± 1 125 ftps

In the Inner Zone:

$8f_{IZ}$ = 2 000 000 ftps ± 2 000 ftps
$3f_{IZ}$ = 750 000 ftps ± 750 ftps

The frequency(ies) to be used is(are) specified for each test.

11.3.1.2 Test Recording Currents

The Test Recording Currents shall have the following relationships to the Standard Reference Current at $8f_{IZ}$ on Track 325.

Side 0	tracks	-004 to 112 and 219 to 328	: (130 ± 2) %
Side 0	tracks	113 to 218	: (180 ± 2) %
Side 1	tracks	-004 to 080 and 203 to 328	: (130 ± 2) %
Side 1	tracks	081 to 202	: (180 ± 2) %

11.3.1.3 Erasure

Erasure shall be performed using the d.c. equivalent to the quiescent value I_q of the Test Recording Current before recording the data, unless otherwise specified.

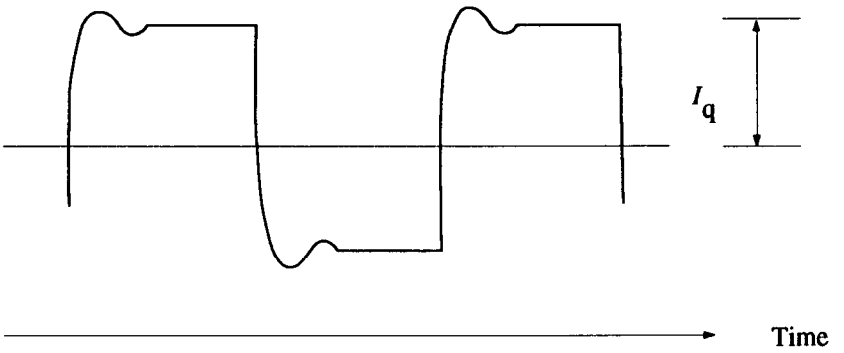

Figure 1 - Quiescent value of the Test Recording Current

11.3.1.4 Rotational speed of the disk

The rotational speed of the disk shall be 600 rpm ± 6 rpm. The direction of rotation shall be counter-clockwise as seen from Side 0 of the flexible disk cartridge.

11.3.2 Typical Field

The Typical Field of the disk under test shall be (100 ± 20) % of the Reference Field. It shall be measured using $8f_{IZ}$ on Track 325.

Traceability to the Reference Field is provided by the calibration factors supplied with each Secondary Standard Reference Flexible Disk Cartridge.

Copyright International Organization for Standardization
Provided by IHS under license with ISO
No reproduction or networking permitted without license from IHS Not for Resale

11.3.3 Average Signal Amplitude

When the disk under test has been recorded with the Test Recording Current, then read back and compared with the Secondary Standard Reference Flexible Disk Cartridge recorded under the same conditions, the Average Signal Amplitude shall be

- on Track 000, using $3f_{OZ}$: less than 130 % of SRA1
- on Track 325, using $8f_{IZ}$: more than 85 % of SRA2

Traceability to the Standard Reference Amplitudes is provided by the calibration factors supplied with each Secondary Standard Reference Flexible Disk Cartridge.

11.3.4 Resolution

After recording on Track 325, using the Test Recording Current, the ratio:

$$\frac{\text{Average Signal Amplitude using } 8f_{IZ}}{\text{Average Signal Amplitude using } 3f_{IZ}} \times 100\%$$

shall be equal to $(1{,}00 \pm 0{,}15)$ times the same ratio for the Master Standard Reference Flexible Disk Cartridge.

Traceability to the resolution of the Master Standard Reference Flexible Disk Cartridge is provided by the calibration factors supplied with each Secondary Standard Reference Flexible Disk Cartridge.

11.3.5 Peak shift

The average peak shift measured on the disk cartridge under test, using the method specified in annex F, shall be (100 ± 37) % of that of the Master Standard Reference Flexible Disk Cartridge when measured on the Secondary Standard Reference Flexible Disk Cartridge under the same conditions. This test shall be performed on Track 325.

Traceability to the peak shift of the Master Standard Reference Flexible Disk Cartridge is provided by the calibration factors supplied with each Secondary Standard Reference Flexible Disk Cartridge.

11.3.6 Overwrite

The overwrite measured on Track 113 on Side 0 and on Track 081 on Side 1, using the method specified in annex G, shall not exceed 1,25 times the value of the overwrite of the Master Standard Reference Flexible Disk Cartridge.

Traceability to the overwrite of the Master Standard Reference Flexible Disk Cartridge is provided by the calibration factors supplied with each Secondary Standard Reference Flexible Disk Cartridge.

11.3.7 Modulation

Modulation shall be

$$\frac{A - B}{A + B} \times 100\%$$

where

A: The maximum value of the average values of the amplitude-modulated output voltage of about 2 000 consecutive flux transitions in a track. Output voltage shall be measured peak-to-peak.

B: The minimum value of the average values of the amplitude-modulated output voltage of about 2 000 consecutive flux transitions in a track. Output voltage shall be measured peak-to-peak.

On all tracks of the Outer Zone using $8f_{OZ}$ and on all tracks of the Inner Zone using $8f_{IZ}$, modulation shall be less than 10 %.

11.4 Track quality tests

These tests shall apply to Tracks -001 to 325 on each side. The appropriate Test Recording Current shall be used.

11.4.1 Missing pulse

In the Outer Zone write a track using $8f_{OZ}$ and in the Inner Zone write a track using $8f_{IZ}$. Any playback signal which, when measured base-to-peak, is less than 65 % of half the Average Signal Amplitude of the track, is a missing pulse.

Copyright International Organization for Standardization
Provided by IHS under license with ISO
No reproduction or networking permitted without license from IHS Not for Resale

11.4.2 Extra pulse

In the Outer Zone write a track using $8f_{OZ}$ and in the Inner Zone write a track using $8f_{IZ}$. Measure the Average Signal Amplitude. Then erase the track for one revolution with a d.c. equal to the quiescent value of the Test Recording Current applied to the head (see figure 1). Any playback signal which, when measured base-to-peak, exceeds 20 % of half the Average Signal Amplitude is an extra pulse.

11.4.3 Requirement for tracks

A cartridge shall meet the requirements in 11.4.3.1 and 11.4.3.2.

Defects shall be missing and/or extra pulses detected in the same position(s) on three consecutive passes.

11.4.3.1 Tracks -001 to 005

As initially received from the medium supplier, the cartridge shall have no defects on tracks -001 to 005.

11.4.3.2 Tracks 006 to 325

The acceptable number of defects on these tracks of the FDCs initially received from the medium supplier, is a matter of agreement between supplier and purchaser. A reasonable number could be less than 20 per disk.

11.4.4 Rejected cartridge

A cartridge that does not meet the requirements of 11.4.3.1 shall be rejected.

Section 4 - Requirements for the interchanged disk

12 Recording of Data Tracks

12.1 Method of recording

The method of recording shall be the 2-7 Run Length Limited (2-7 RLL) method in which

- a ONE is represented by a flux transition at the centre of a bit cell,
- a ZERO is represented by no flux transition at the centre of a bit cell,
- the number of ZEROs between two consecutive ONEs is at least two and at most seven.

Table 1 indicates how the input bit series shall be converted into Channel bits series to meet the requirements of the recording method.

Table 1 - Code conversion

Input bits series	Channel bits series
10	0100
11	1000
000	000100
010	100100
011	001000
0010	00100100
0011	00001000

12.2 Tolerances of the track locations

Within the testing environment specified in 8.1.1 the centrelines of the recorded Data Tracks shall meet both following requirements:

- they shall be within 0,050 mm of their nominal location,
- their distance, in millimetres, from Track 000 shall be as follows
  - multiply 0,046 875 by n_D, where n_D is the Data Track number,
  - round off the result to three digits after the decimal comma to obtain this distance,
  - the tolerance on this distance shall be ± 0,020 mm.

Copyright International Organization for Standardization
Provided by IHS under license with ISO
No reproduction or networking permitted without license from IHS Not for Resale

12.3 Recording offset angle

At the instant of writing or reading a magnetic transition, the transition shall have an angle θ (figure 2)

$$\theta = arc\ \sin\left(\frac{d}{Rn_D}\right) \pm 0°15'$$

where Rn_D is the radius through that transition (see 11.2.4.1), and d = 0,35 mm.

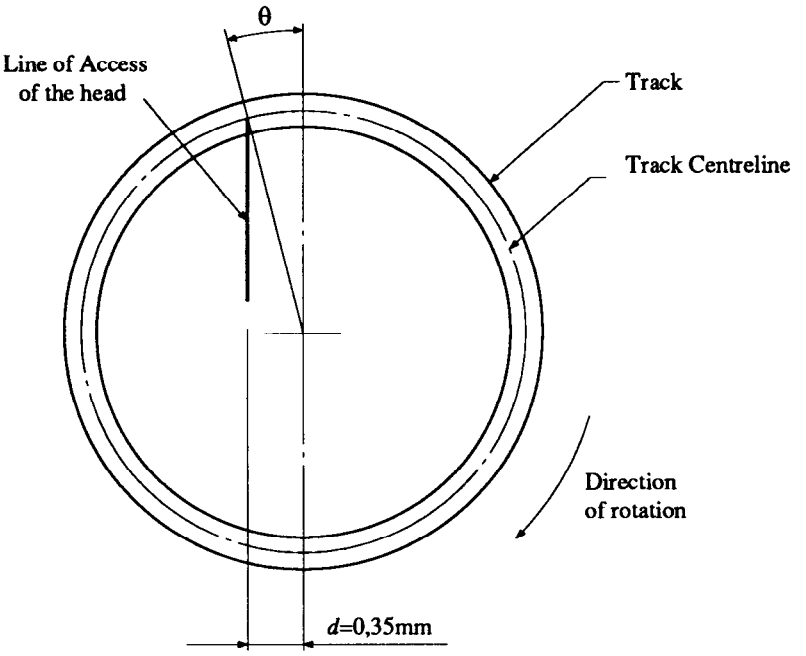

Figure 2 - Recording offset angle, seen on Side 1

12.4 Density of recording

12.4.1 Nominal density of recording

The nominal density of recording shall be 47 747 ftprad in the Outer Zone and 31 831 ftprad in the Inner Zone. The resulting nominal minimum flux transition spacing shall be 20,944 µrad in the Outer Zone, 31,416 µrad in the Inner Zone. The Channel bit cell length shall be one third of the minimum flux transition spacing, thus its nominal value shall be 6,981 µrad in the Outer Zone and 3,142 µrad in the Inner Zone.

12.4.2 Long-term average Channel bit cell length

The long-term average Channel bit cell length shall be the average Channel bit cell length measured over a Data Sector (see 13.1). It shall be within 1,1 % of the nominal Channel bit cell length.

12.4.3 Short-term average Channel bit cell length

The short-term average Channel bit cell length, referred to a particular bit cell, shall be the average of the lengths of the preceding 50 Channel bit cells. It shall be within 5 % of the long-term average Channel bit cell length.

12.5 Flux transition spacing

The instantaneous spacing between flux transitions is influenced by the reading and writing process, the bit sequence (pulse crowding effect) and other factors. The locations of the transitions are defined as the locations of the peaks in the signal when reading. Tests shall be carried out according to annex H. The results shall conform to the requirements specified in table 2, where the flux transition spacings are expressed as the percentages of the short-term average Channel bit cell length.

Copyright International Organization for Standardization
Provided by IHS under license with ISO
No reproduction or networking permitted without license from IHS
Not for Resale

Table 2 - Flux transition spacings

Channel bits series	Flux transition spacings
1001	$300\ \%\ ^{+45}_{-35}\ \%$
10001	$400\ \% \pm 40\ \%$
100001	$500\ \%\ ^{+35}_{-45}\ \%$
1000001	$600\ \%\ ^{+30}_{-45}\ \%$
10000001	$700\ \%\ ^{+25}_{-45}\ \%$
100000001	$800\ \%\ ^{+25}_{-45}\ \%$

At least two ZEROs shall preced and follow each Channel bit series.

12.6 Average Signal Amplitude

For each side the Average Signal Amplitude on any track of the interchanged FDC shall be less than 160 % of SRA1 and more than 40 % of SRA2.

12.7 Byte

A byte is an ordered set of eight input bits, identified by B_1 to B_8, where B_8 is the most significant bit. The bit in each position shall be a ZERO or a ONE.

12.8 Data Sector

Each Data Sector contains 512 user bytes. There shall be 84 Data Sectors per track in the Outer Zone and 56 Data Sectors per track in the Inner Zone.

12.9 Cylinder

A pair of tracks, one on each side, having the same track number.

12.10 Cylinder number

The cylinder number shall be a three-digit number identical with the track number of the tracks of the cylinder.

12.11 Data capacity of a track

The data capacity of a track shall be 43 008 user bytes in the Outer Zone and 28 672 user bytes in the Inner Zone.

Copyright International Organization for Standardization
Provided by IHS under license with ISO
No reproduction or networking permitted without license from IHS
Not for Resale

12.12 Hexadecimal notation

The negative value of a cylinder number shall be recorded as the complement value of 2. Table 3 shows the hexadecimal notations used hereafter.

Table 3 - Hexadecimal notation

Hexadecimal	B_8 to B_1	Hexadecimal	B_8 to B_1
(00)	00000000	(92)	10010010
(01)	00000001	(C9)	11001001
(20)	00100000	(CC)	11001100
(24)	00100100	(D8)	11011000
(26)	00100110	(DA)	11011010
(3F)	00111111	(E2)	11100010
(40)	01000000	(E3)	11100011
(49)	01001001	(FA)	11111010
(6C)	01101100	(FB)	11111011
(8A)	10001010	(FF)	11111111

13 Disk layout

Data Sectors and Servo Sectors shall be recorded in Data Tracks and Servo Tracks, respectively. Servo Tracks shall be located at half a track pitch away from Data Tracks (see figure 3).

After formatting there shall be on each side 333 pairs consisting of a Data Track and an associated Servo Track, and 9 single Servo Tracks. Each of these 333 pairs comprises 28 Sector Blocks. Each Sector Block comprises one Servo Sector and two Data Sectors in the Inner Zone, and one Servo Sector and three Data Sectors in the Outer Zone (figure 4).

Further requirements for Sector Blocks are specified in 15.1.1 and in clause 16.

Copyright International Organization for Standardization
Provided by IHS under license with ISO
No reproduction or networking permitted without license from IHS Not for Resale

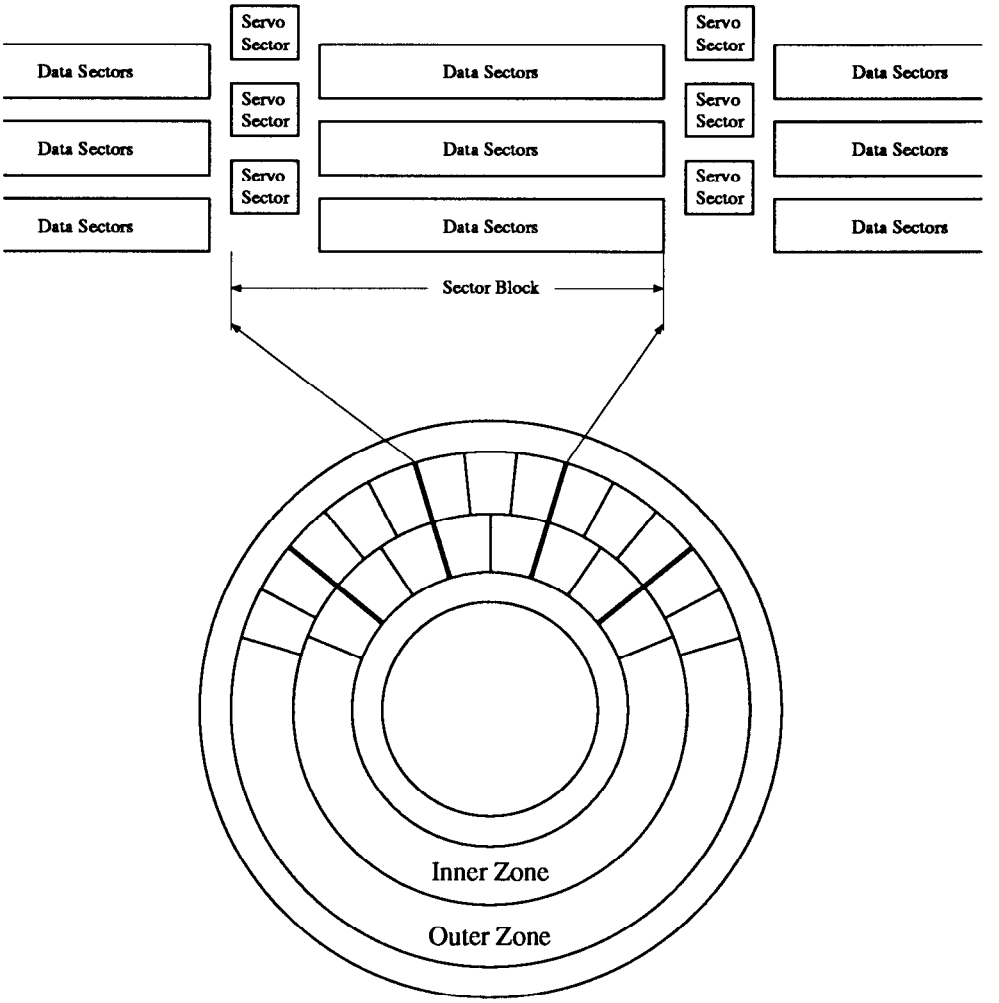

Figure 3 - Disk layout

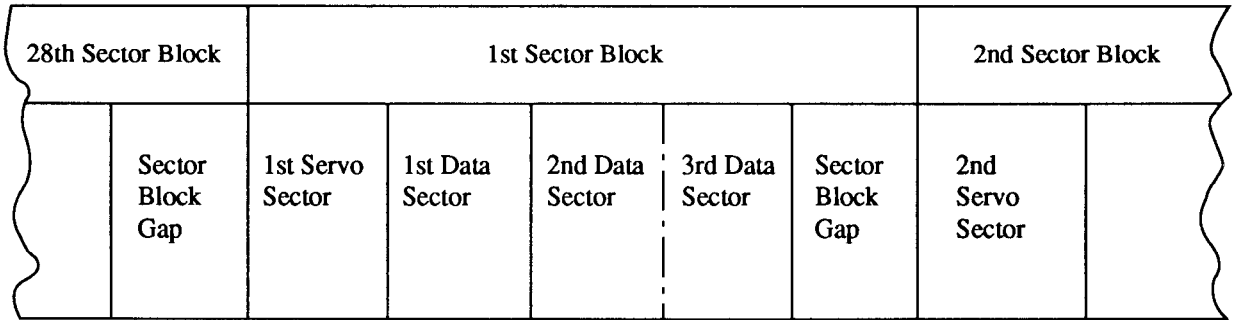

Figure 4 - Sector Blocks

Data Sectors are specified in 13.1.

Servo Sectors are specified in clause 14.

The Sector Block Gap shall have a nominal length of 2,090 mrad. It shall be d.c. erased. It shall be recorded between the last Data Block Gap of each Sector Block and the Servo Sector of the following Sector Block.

Copyright International Organization for Standardization
Provided by IHS under license with ISO
No reproduction or networking permitted without license from IHS
Not for Resale

13.1 Layout of a Data Sector

Formatting of Data Tracks shall begin at 17,562 mrad from the beginning of the Servo Identifier (see 15.1.1) and shall be performed at a rotational speed of the disk of 600 rpm ± 3 rpm averaged over a Servo Sector. Data Sectors shall have the layout shown in figure 5.

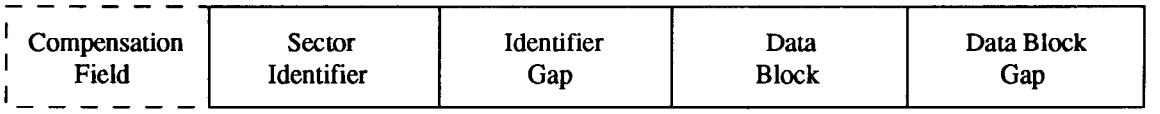

Figure 5 - Layout of Data Sectors

13.1.1 Compensation field

This field shall comprise 12 initially recorded bytes set to (CC) in the Outer Zone and 8 initially recorded bytes set to (CC) in the Inner Zone. Only the first Data Sector of a Sector Block shall have a Compensation Field recorded between its Sector Identifier and the Servo Sector of the Sector Block.

13.1.2 Sector Identifier

The layout of this field shall be as shown in figure 6.

Identifier Mark					Address Identifier				
					Track Address		Data Sector Number	EDC	7th byte
					Cyl.	Side	S		
2 bytes (49) (24)	d.c. erased area	9 bytes 3 times: (49) (24) (92)	3 bytes (C9) (6C) (92)	1 byte (E2)	2 bytes	1 byte (00) or (01)	1 byte	2 bytes	1 byte (00)

Figure 6 - Sector Identifier

13.1.2.1 Identifier Mark

This field shall have a length corresponding to 288 Channel bits, viz.

2 bytes set to (49) and (24), respectively
a d.c. erased area of a length corresponding to 48 Channel bits
9 bytes consisting of three times three bytes set to (49), (24) and (92), respectively
3 bytes set to (C9), (6C) and (92), respectively
1 byte set to (E2).

13.1.2.2 Address Identifier

This field shall comprise 7 bytes.

13.1.2.2.1 Track Address

This field shall comprise 3 bytes.

a) Cylinder Number

This field shall comprise the first byte and the second byte of the Track Address. It shall specify in binary notation the cylinder number from -004 for the outermost cylinder to 328 for the innermost cylinder. The negative value of cylinder number shall be recorded as the complement value of 2.

b) Side Number

This field shall specify the side of the disk.

On Side 0, it shall be set to (00) on all tracks.

On Side 1, it shall be set to (01) on all tracks.

Copyright International Organization for Standardization
Provided by IHS under license with ISO
No reproduction or networking permitted without license from IHS Not for Resale

13.1.2.2.2 Data Sector Number

The 4th byte shall specify in binary notation the Data Sector Number from 01 for the 1st Data Sector to 84 for the last Data Sector in the Outer Zone, and from 01 for the 1st Data Sector to 56 for the last Data Sector in the Inner Zone. The Data Sectors may be recorded in any order of their Sector Numbers.

13.1.2.2.3 Error Detecting Code

The two EDC bytes shall be hardware-generated by shifting serially the bytes of the Sector Identifier, starting with the byte of the Identifier Mark set to (E2) and ending with the 4th byte of the Address Identifier, through a 16-bit shift register described by the generator polynomial

$$G(x) = x^{16} + x^{12} + x^5 + 1$$

See also annex P.

13.1.2.2.4 7th byte of the Address Identifier

The 7th byte of the Address Identifier shall be set to (00).

13.1.3 Identifier Gap

This field shall comprise 6 bytes initially recorded as (49) (24) (92) (49) (24) (92).

Some of these bytes may have become ill-defined due to overwriting, but at least four consecutive bytes shall remain valid.

13.1.4 Data Block

The layout of this field shall be as shown in figure 7.

Data Mark						Data Field	EDC	ECC	
9 bytes 3 times: (49) (24) (92)	3 bytes (C9) (6C) (92)	1 byte (FB)	9 bytes 3 times: (49) (24) (92)	3 bytes (C9) (6C) (92)	1 byte (FA)	512 bytes	3 bytes	24 bytes	1 byte (00)

Figure 7 - Data Block

13.1.4.1 Data Mark

This field shall comprise 26 bytes:

9 bytes consisting of three times three bytes set to (49), (24) and (92), respectively
3 bytes set to (C9), (6C) and (92), respectively
1 byte set to (FB)
9 bytes consisting of three times three bytes set to (49), (24) and (92), respectively
3 bytes set to (C9), (6C) and (92), respectively
1 byte set to (FA).

13.1.4.2 Data Field

This field shall comprise 512 data bytes. If it comprises less than 512 data bytes, the remaining bytes shall be set to (00).

13.1.4.3 Error Detecting Code

This field shall comprise 3 EDC bytes: C_0, C_1 and C_2. They shall be computed over the Galois Field (2^8) based on the primitive polynomial

$$G_p(x) = x^8 + x^4 + x^3 + x^2 + 1$$

The primitive element of GF(2^8) shall be

$$\alpha = (\ \underset{\alpha^7}{0}\ \ \underset{\alpha^6}{0}\ \ \underset{\alpha^5}{0}\ \ \underset{\alpha^4}{0}\ \ \underset{\alpha^3}{0}\ \ \underset{\alpha^2}{0}\ \ \underset{\alpha^1}{1}\ \ \underset{\alpha^0}{0}\ )$$

The generator polynomial shall be

$$G(x) = (x + \alpha^6)\ (x + \alpha^{222})\ (x + \alpha^{251}) = (x + (D8))\ (x + (8A))\ (x + (40))$$

See also annex P.

Copyright International Organization for Standardization
Provided by IHS under license with ISO
No reproduction or networking permitted without license from IHS Not for Resale

13.1.4.4 Error Correcting Code

The 24 ECC bytes shall be computed over the Galois Field (2^8) based on the primitive polynomial

$$G_p(x) = x^8 + x^4 + x^3 + x^2 + 1$$

The primitive element of GF(2^8) shall be

$$\alpha = (\ \underset{\alpha^7}{0}\ \ \underset{\alpha^6}{0}\ \ \underset{\alpha^5}{0}\ \ \underset{\alpha^4}{0}\ \ \underset{\alpha^3}{0}\ \ \underset{\alpha^2}{0}\ \ \underset{\alpha^1}{1}\ \ \underset{\alpha^0}{0}\ )$$

The generator polynomial shall be

$$G(x) = (x + 1)(x + \alpha)(x + \alpha^2)(x + \alpha^3)(x + \alpha^4)(x + \alpha^5) = x^6 + (3F)\,x^5 + (01)\,x^4 + (DA)\,x^3 + (20)\,x^2 + (E3)\,x + (26)$$

The layout of this field shall be as shown in figure 8, where B_0 shall be a dummy data byte set to (FF) which is not recorded. D_0 to D_{511} shall be users data, C_0, C_1 and C_2 shall be EDC bytes from Data Blocks, and P_0 to P_{23} shall be ECC bytes. The method of generating the ECC bytes shall be as follows (see also annex Q).

a) The ECC bytes of the first frame

The ECC bytes P_0, P_4, ..., P_{20} of the first frame shall be generated using the 129 bytes from B_0, D_3, ..., D_i, ..., D_{507} to D_{511}.

b) The ECC bytes of the second frame

The ECC bytes P_1, P_5, ..., P_{21} of the second frame shall be generated using the 129 bytes from D_0, D_4, ..., D_{i+1}, ..., D_{508} to C_0.

c) The ECC bytes of the third frame

The ECC bytes P_2, P_6, ..., P_{22} of the third frame shall be generated using the 129 bytes from D_1, D_5, ..., D_{i+2}, ..., D_{509} to C_1.

d) The ECC bytes of the fourth frame

The ECC bytes P_3, P_7, ..., P_{23} of the fourth frame shall be generated using the 129 bytes from D_2, D_6, ..., D_{i+3}, ..., D_{510} to C_2.

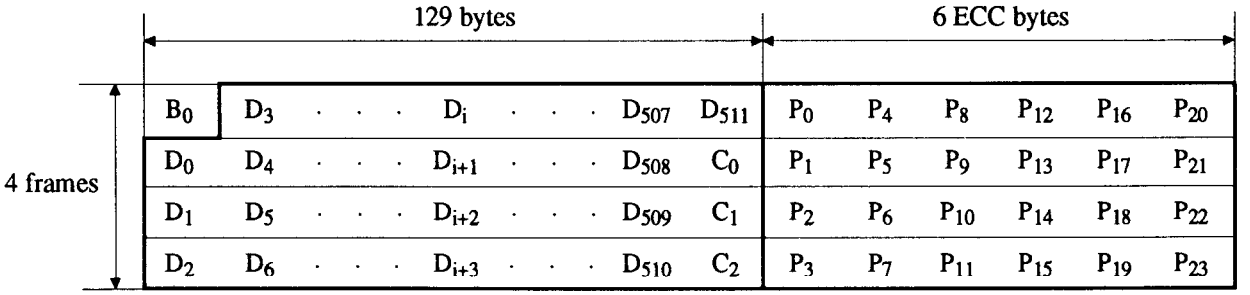

Figure 8 - Layout of the ECC

13.1.4.5 Last byte of the Data Block

The last byte of the Data Block shall be set to (00).

13.1.5 Data Block Gap

This field shall comprise 10 bytes initially recorded as (49) (24) (92) (49) (24) (92) (49) (24) (92) (49). These bytes may have become ill-defined due to overwriting. A Data Block Gap shall be recorded after each Data Block.

13.1.6 Defective Data Sector

A Data Sector, in which EDC bytes of the Sector Identifier and/or EDC bytes of the Data Block after correcting an error still detect the error, is a defective Data Sector (see 13.2.2). No defective Data Sector shall be permitted in cylinder 000 to cylinder 005. The handling of a defective Data Sector shall be as specified in annex J.

13.2 Data Tracks

There are three types of Data Track.

Copyright International Organization for Standardization
Provided by IHS under license with ISO
No reproduction or networking permitted without license from IHS Not for Resale

13.2.1 Data Tracks for the user

Tracks 000 to 325 are allocated for user bytes. On Side 1, the last Data Sector of each even-numbered track, including Track 000, shall be a spare Data Sector. The data of the defective Data Sectors shall be recorded on the spare Data Sectors.

13.2.2 Data Tracks for the management of defective Data Sectors

Track -001 of Side 0 is used for data management. The addresses of defective Data Sectors and those of the corresponding spare Data Sectors used shall be recorded on this track. This information is repeated on Track -001 of Side 1 (see also annex J).

13.2.3 Data Tracks for servo recovery

Tracks -004 to -002 and Tracks 326 to 328 are used for the determination of the radial head position. The content of the Data Block shall not be used.

13.3 Coded representation of data

The coded representation of the input data is a matter of agreement between the interchange parties, and is not specified by this International Standard.

14 General requirements for recording Servo Tracks

The sector servo recording method is a recording technique that records the track positioning signals of the magnetic head of a disk drive between the sectors in which data are recorded.

The track positioning information for the magnetic head is recorded on the Servo Track which is located 0,5 track pitch away from the Data Track.

14.1 Method of recording

In the Servo Identifier (SVID) area, the SVID signal shall be recorded at two flux transition frequencies alternately on Servo Tracks. In the Servo Data (SVDT) area, a continuous signal shall be recorded.

The nominal flux transition frequencies of the servo signal are shown in table 4.

Table 4 - Flux transition frequencies of the servo signals

	SVID A	SVID B	SVDT
Frequency (ftps)	400 000	200 000	1 143 000

NOTE 8 - Servo Track recording conditions are shown in annex R.

14.2 Servo Tracks

14.2.1 Number of Servo Tracks

In the recording area, there shall be 342 discrete concentric Servo Tracks on each side of the disk.

14.2.2 Width of Servo Tracks

The width of a recorded Servo Track shall be

0,044 mm ± 0,003 mm

The method for measuring the effective Servo Track width is given in D.2 of annex D.

Copyright International Organization for Standardization
Provided by IHS under license with ISO
No reproduction or networking permitted without license from IHS Not for Resale

14.2.3 Servo Track location

14.2.3.1 Nominal locations

The nominal radius (Rn_S) of the centrelines of all Servo Tracks shall be calculated by using the formula:

$$Rn_S = x - 0{,}046\,875\ n_S$$

where

n_S is the Servo Track number, n_S = -10,5 to 330,5
x = 39,875 mm for Side 0
x = 38,375 mm for Side 1

14.2.3.2 Tolerances of the track locations

Within the testing environment specified in 8.1.1 the centrelines of the recorded Servo Tracks shall meet both following requirements:

- they shall be within 0,050 mm of their nominal location,
- their distance, in millimetres, from Track 000 shall be as follows
  - multiply 0,046 875 by n_S, where n_S is the Servo Track number,
  - round off the result to three digits after the decimal comma to obtain this distance,
  - the tolerance on this distance shall be ± 0,020 mm.

14.2.3.3 Distance of Servo Track

- The distance between the centrelines of adjacent Servo Tracks shall be 0,046 9 mm ± 0,001 5 mm.
- The radial offset between centrelines of Servo Tracks with the same number on Side 0 and Side 1 shall be 1,500 mm ± 0,035 mm.

The method of measuring distance between centrelines of adjacent tracks is given in D.2 of annex D.

14.2.3.4 Eccentricity of Servo Tracks

The eccentricity of the centreline of a Servo Track in the radial direction shall be within 0,006 mm.

The method of measuring the eccentricity of Servo Tracks is given in annex K.

14.3 Average Signal Amplitude of servo data

When two radially adjacent servo data have equal outputs, the Average Signal Amplitude of the servo data on Servo Track -4,5 to Servo Track 328,5 for one revolution shall be less than 80 % of the Standard Reference Amplitude SRA1 and more than 30 % of the Standard Reference Amplitude SRA2.

14.4 Displacement due to fluctuations of signal amplitude of servo data

The displacement of the head due to the variations of the signal amplitude of servo data shall be measured using the equivalent displacement of the head when it moves in the radial direction ignoring the movement due to the eccentricity of the Servo Track. This value shall be within 0,001 2 mm.

A method of measurement is given in annex S.

15 Layout of the Servo Track

The Servo Track layout shall be as shown in figure 9. Servo signals shall be recorded on Servo Tracks -10,5 to 330,5. Servo signals shall be composed of either an A-type Servo Identifier (SVID A) or a B-type Servo Identifier (SVID B), and servo data (SVDT).

Formatting of a Servo Track shall commence with the occurrence of Index. Index shall occur within 220 µs from the instant at which the Reference Line B (see 9.4.2.2) is parallel to the Line of Access.

Servo Tracks -10,5 to -5,5 and 328,5 to 330,5 are not associated with Data Tracks. They are used for the determination of the radial head position.

The other Servo Tracks from Servo Track -4,5 to 327,5 are associated with Data Tracks by the relation $n_S = n_D - 0{,}5$ where n_S is the Servo Track number and n_D that of the associated Data Track.

Copyright International Organization for Standardization
Provided by IHS under license with ISO
No reproduction or networking permitted without license from IHS Not for Resale

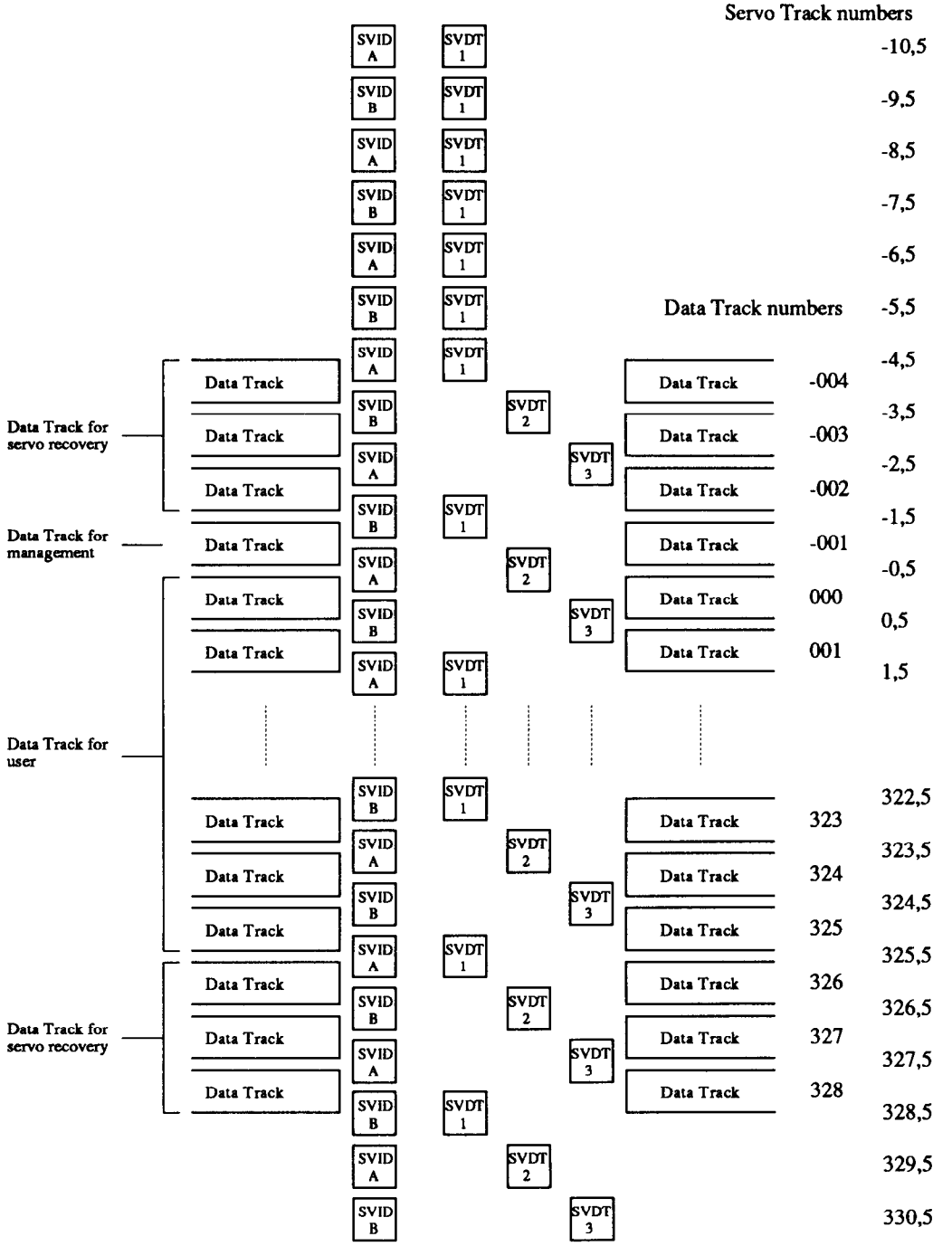

Figure 9 - Layout of Servo Track

15.1 Layout of the Servo Sector

The relative positions of the areas where the servo signals are recorded are shown in figure 10. The T_i corresponds to their angular length and positions. Table 5 specifies the lengths of these areas in milliradians.

Copyright International Organization for Standardization
Provided by IHS under license with ISO
No reproduction or networking permitted without license from IHS
Not for Resale

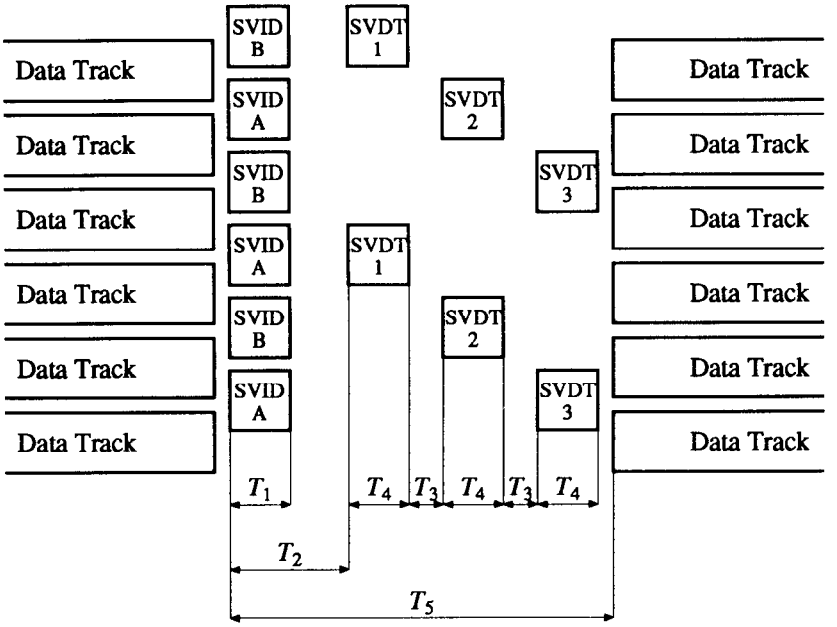

Figure 10 - Layout of the Servo Sector

Table 5 - Servo Sector positions

	T_1	T_2	T_3	T_4	T_5
Angle (mrad)	3,142	4,273	0,628	3,801	17,562
Tolerance (%)	5	5	5	5	2

Whilst T_1 to T_4 have each a tolerance of 5%, the sum $(T_2 + 2T_3 + 3T_4)$ shall not exceed the actual value of T_5.

15.1.1 Servo Identifier

The Servo Identifier of Sector Block n shall begin at the location 224,4 $(n\text{-}1)$ mrad ± 0,5 mrad from the beginning of the Servo Identifier of Sector Block 01, where n is the Sector Block number, n = 02 to 28.

The beginning of the Servo Identifier of any Sector Block shall be within 0,15 mrad from the beginning of the Servo Identifier of the adjacent Servo Track.

a) A-type Servo Identifier (SVID A) shall consist of 20 flux transitions recorded at 400 000 ftps.

b) B-type Servo Identifier (SVID B) shall consist of 10 flux transitions recorded at 200 000 ftps.

c) The Servo Identifier of all Sector Blocks of the outermost Servo Track (Servo Track -10,5) shall be SVID A, and the Servo Identifier of all Sector Blocks of next Servo Track (Servo Track -9,5) shall be SVID B. SVID A and SVID B shall be recorded in the same alternate manner on Servo Tracks -8,5 to 330,5.

15.1.2 Servo data

Three types of servo data (SVDT 1, SVDT 2 and SVDT 3) shall be recorded as described in 15.1.

The servo data of the outermost seven Servo Tracks (Servo Tracks -10,5 to -4,5) shall be SVDT 1. The servo data of other Servo Tracks shall be SVDT i specified by using the formula

$$i = rem\,[(n_S + 4{,}5), 3] + 1$$

where

n_S is the Servo Track number, n_S = -3,5 to 330,5

rem $[x, y]$ is the remainder of the division of integer x by integer y.

Copyright International Organization for Standardization
Provided by IHS under license with ISO
No reproduction or networking permitted without license from IHS
Not for Resale

The recording position of SVDT 1, SVDT 2 and SVDT 3 (see 15.1) and the servo signal shall be as follows.

a) For SVDT 1 :

The area of 1,131 mrad defined by (T_2-T_1) shall be d.c. erased from the end of the Servo Identifier. Then in the area of 3,801 mrad defined by (T_4) the servo signal shall be recorded. The following area of 9,488 mrad defined by (T_5-T_2-T_4) shall be d.c. erased.

b) For SVDT 2 :

The area of 5,561 mrad defined by (T_2-T_1+T_4+T_3) shall be d.c. erased from the end of the Servo Identifier. Then in the area of 3,801 mrad defined by (T_4) the servo signal shall be recorded.The following area of 5,057 mrad defined by (T_5-T_2-T_4-T_3-T_4) shall be d.c. erased.

c) For SVDT 3 :

The area of 9,990 mrad defined by (T_2-T_1+T_4+T_3+T_4+T_3) shall be d.c. erased from the end of the Servo Identifier. Then in the area of 3,801 mrad defined by (T_4) the servo signal shall be recorded. The following area of 0,628 mrad defined by (T_5-T_2-T_4-T_3-T_4-T_3-T_4) shall be d.c. erased.

d) SVDT servo signals shall consist of at least 68 flux transitions recorded at 1 143 000 ftps.

16 Relative position of Data Tracks and Servo Tracks

For each pair of Sector Blocks the offset between Servo Tracks and Data Tracks shall meet the following condition

$$\left(\frac{R_x + R_{x+1}}{2}\right) - R_{dx} \leq 0{,}003 \text{ mm}$$

where:

R_x is the radius of the Servo Sector of Sector Block x for which adjacent SVDTs have an equal output,

R_{x+1} is the radius of the Servo Sector of Sector Block x+1 for which adjacent SVDTs have an equal output,

R_{dx} is the radius of the average centreline of the Data Sectors of Sector Block x.

Annex L specifies the measuring method.

Copyright International Organization for Standardization
Provided by IHS under license with ISO
No reproduction or networking permitted without license from IHS
Not for Resale

© ISO/IEC

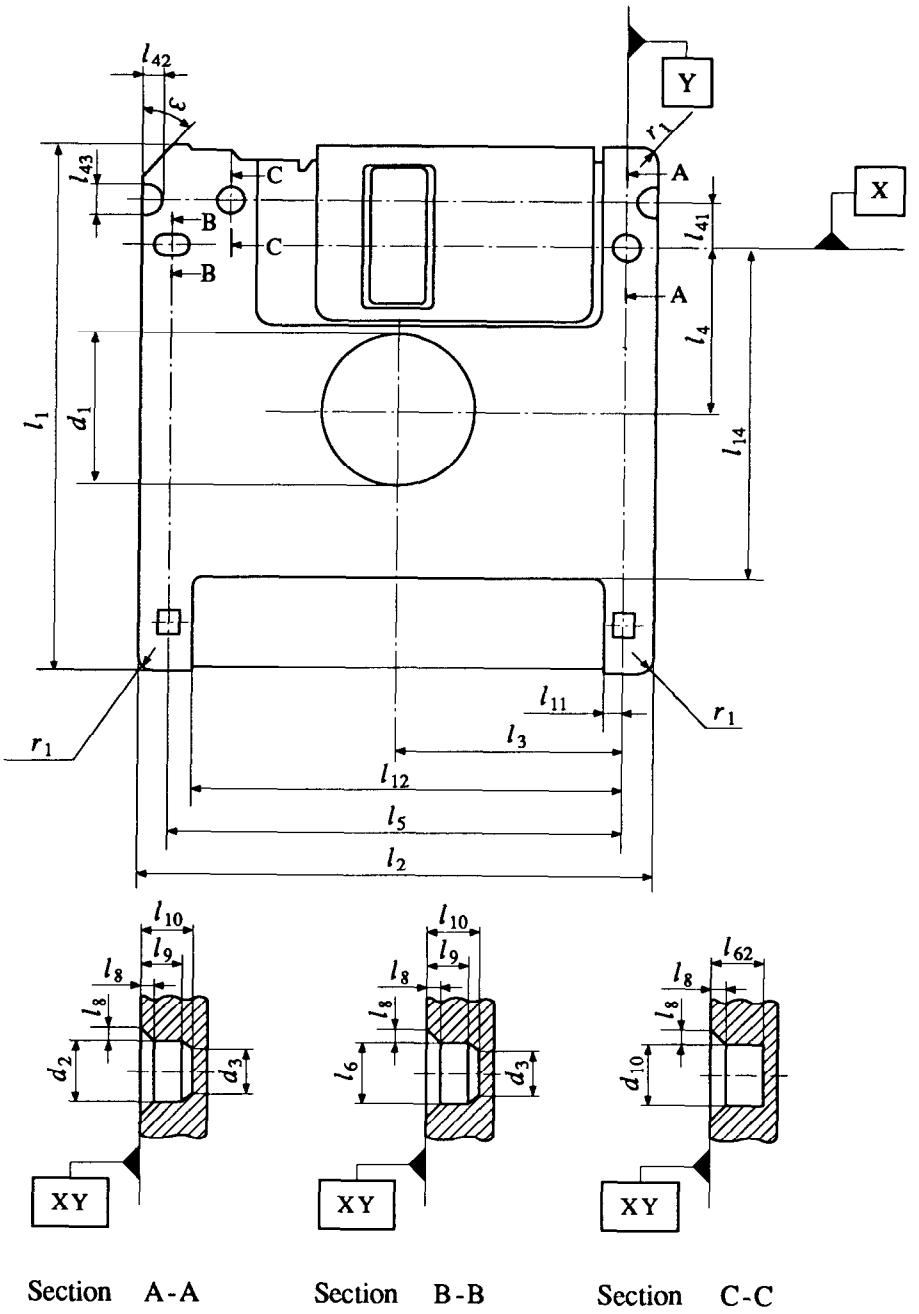

Figure 11 - Side 0

Copyright International Organization for Standardization
Provided by IHS under license with ISO
No reproduction or networking permitted without license from IHS
Not for Resale

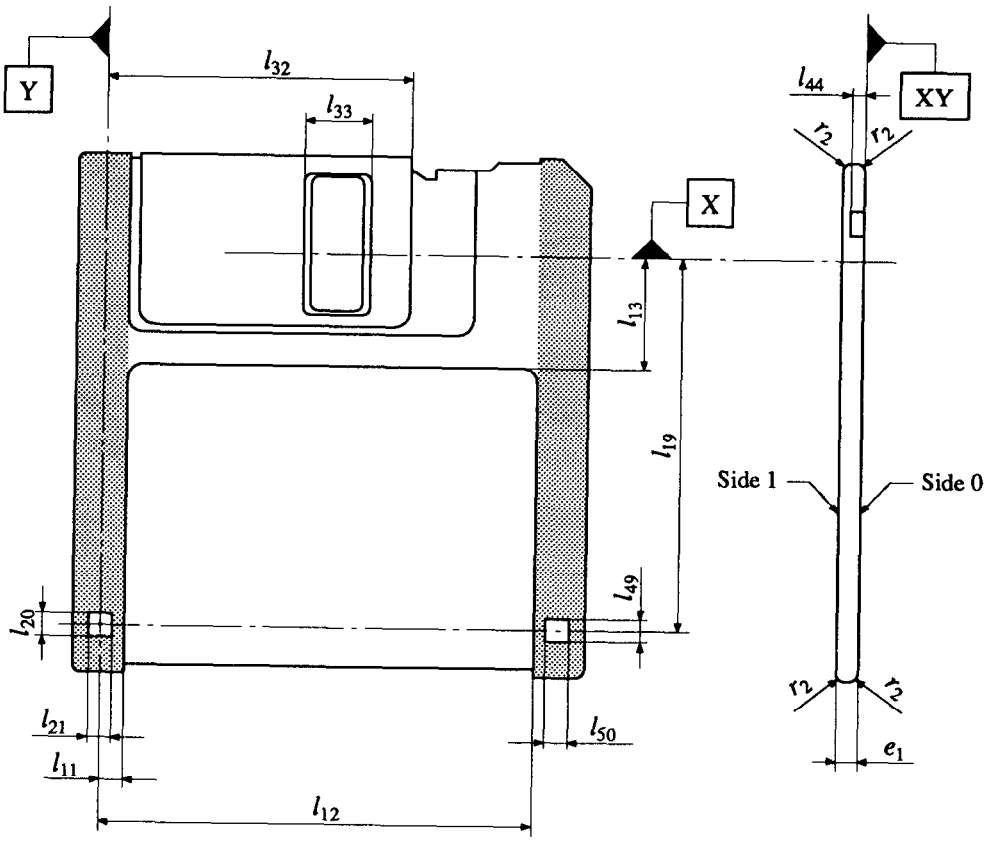

Figure 12 - Side 1

Copyright International Organization for Standardization
Provided by IHS under license with ISO
No reproduction or networking permitted without license from IHS
Not for Resale

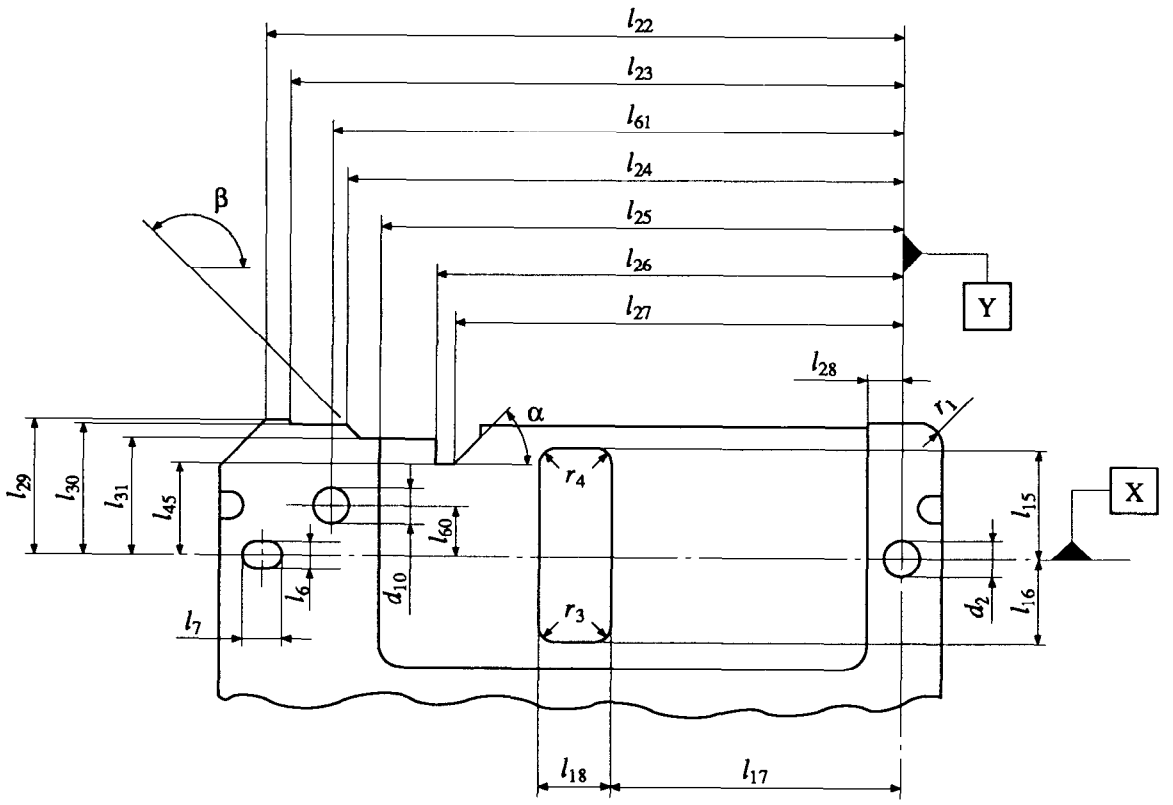

Figure 13 - Side 0, top part (enlarged)

Copyright International Organization for Standardization
Provided by IHS under license with ISO
No reproduction or networking permitted without license from IHS
Not for Resale

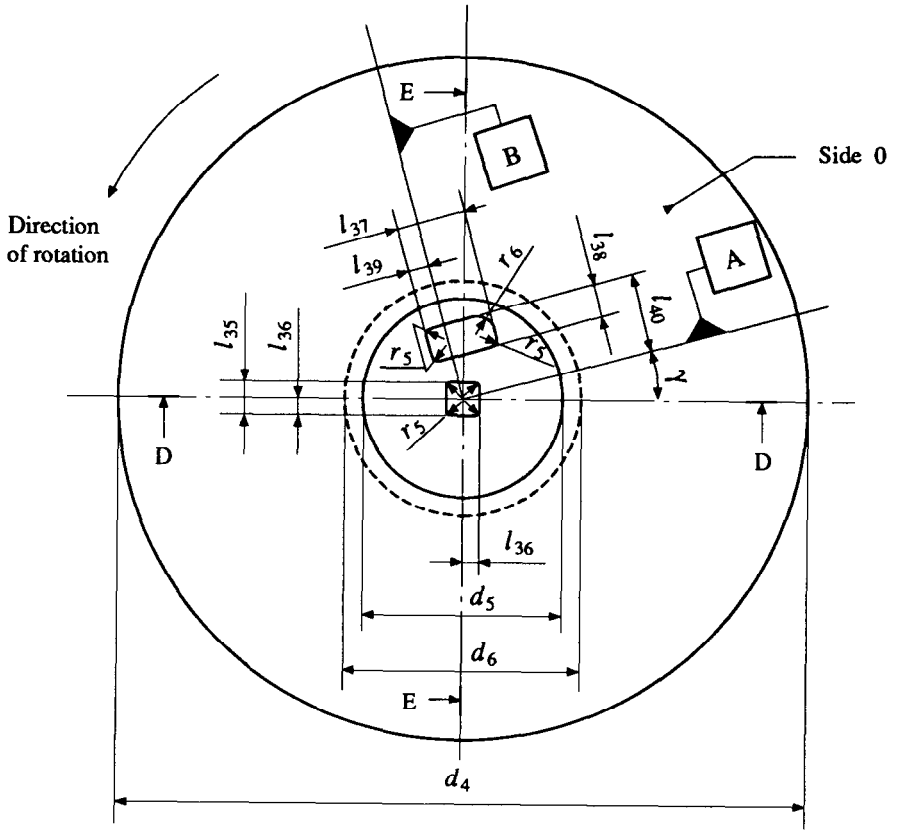

Figure 14 - Disk with hub

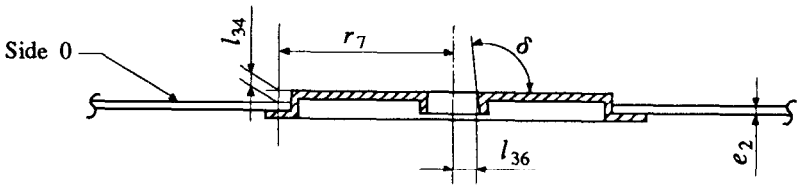

Figure 15 - Hub with partial section

Copyright International Organization for Standardization
Provided by IHS under license with ISO
No reproduction or networking permitted without license from IHS
Not for Resale

© ISO/IEC

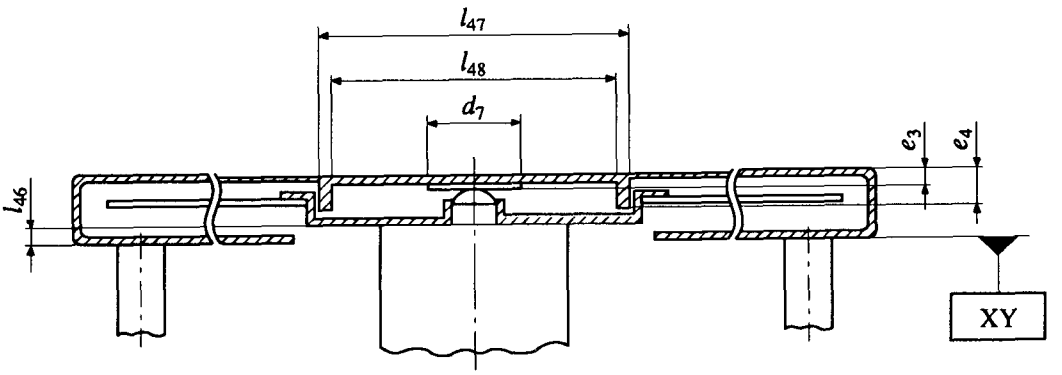

Figure 16 - Cartridge / drive interface

Copyright International Organization for Standardization
Provided by IHS under license with ISO
No reproduction or networking permitted without license from IHS
Not for Resale

Annex A

(normative)

Cartridge distortion test gauge

The gauge to be used is shown in figure A.1.

The gauge shall be made of a suitable material, e.g. of carbon steel and be chrome-plated.

The inner surfaces shall be polished to a surface finish of 5 µm peak-to-peak.

Dimensions shall be as follows:

a = 96,0 mm min.

b = 91,0 mm ± 0,1 mm

c = 8,50 mm ± 0,01 mm

d = 3,80 mm ± 0,01 mm

e = 4,20 mm ± 0,01 mm

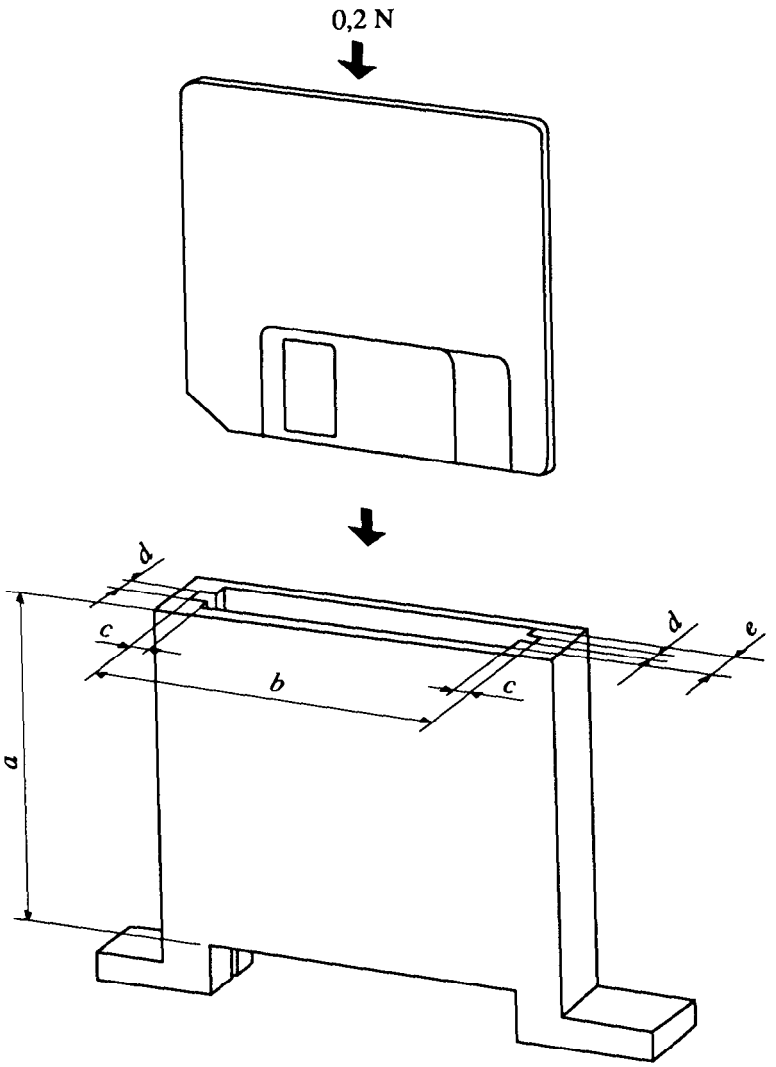

Figure A.1 - Test gauge

Copyright International Organization for Standardization
Provided by IHS under license with ISO
No reproduction or networking permitted without license from IHS
Not for Resale

Annex B

(normative)

Measurement of light transmittance

B.1 Introduction

The following description outlines the general principle of the measuring equipment and the measuring method to be applied when measuring the radiation (light) transmittance of the write-inhibit hole and the opacity of its cover.

For the purpose of this International Standard "light transmittance" is defined by convention as the relationship between the reading obtained from the test device with the sample inserted and the reading obtained when no sample is present. The transmittance value is expressed as the percentage ratio of the two readings. The essential elements of the measuring equipment are:

- the radiation source
- the photo diode
- the optical path
- the measuring circuitry.

B.2 Description of the measuring equipment

B.2.1 Radiation source

An infrared light-emitting diode (LED) with the following parameters shall be used:

Wavelength at peak emission: 940 nm ± 10 nm

Half-power band width: ± 50 nm

B.2.2 Radiation receiver

A flat silicon photo diode shall be used as the radiation receiver. It shall be operated in the short circuit mode. The active area of the diode shall be equal to, or at the most 20 % larger than, the open area of the aperture. This condition guarantees a linear dependency of the short circuit diode current on the light intensity.

B.2.3 Optical path (figure B.1)

The optical axis of the set up shall be perpendicular to the case (Side 1).

The distance from the emitting surface of the LED to the case shall be

$$l_1 = \frac{3,5}{2 \tan \alpha} \text{ mm}$$

where:

3,5 mm is the minimum value of dimension l_{49} (see 9.1.7.2), and
α is the angle where the relative intensity of the LED equals at least 95 % of the maximum intensity on the optical axis.

The aperture shall have a thickness of 1,2 mm to 1,4 mm and a diameter given by

$$D = (2\, l_2 \tan \alpha) \text{ mm}$$

$$l_2 = (l_1 + 1,5) \text{ mm}$$

Its surfaces shall be matt black. The whole device should be enclosed within a light-tight casing.

Copyright International Organization for Standardization
Provided by IHS under license with ISO
No reproduction or networking permitted without license from IHS Not for Resale

B.2.4 Measuring circuitry

Figure B.2 shows the recommended circuitry with the following components:

E : regulated power supply with variable output voltage

R : current-limiting resistor

LED : light-emitting diode

Di : Si photo diode

A : operational amplifier

R_{f0}, R_{f1} : feedback resistors

S : gain switch

V : voltmeter

The forward current of the LED and consequently its radiation power can be varied by means of the power supply E. Di is working in the short circuit mode. The output voltage of the operational amplifier is given by

$$V_0 = I_k \times R_f$$

and is therefore a linear function of the light intensity. I_k is the short circuit current of Di.

R_{f0} and R_{f1} shall be low-temperature drift resistors with an accuracy of 1 %. The following ratio applies:

$$\frac{R_{f0}}{R_{f1}} = \frac{1}{50}$$

B.3 Measuring method

The measurements shall be taken with the case in a fixed position.

- S is set to position 0. With the write-inhibit hole open in front of the photo diode. The voltmeter is set to full-scale reading (100 % transmittance) by varying the output voltage of E.
- The write-inhibit hole is then covered. S is set to position 1. Full deflection of the voltmeter now represents 2 % transmittance.

Copyright International Organization for Standardization
Provided by IHS under license with ISO
No reproduction or networking permitted without license from IHS Not for Resale

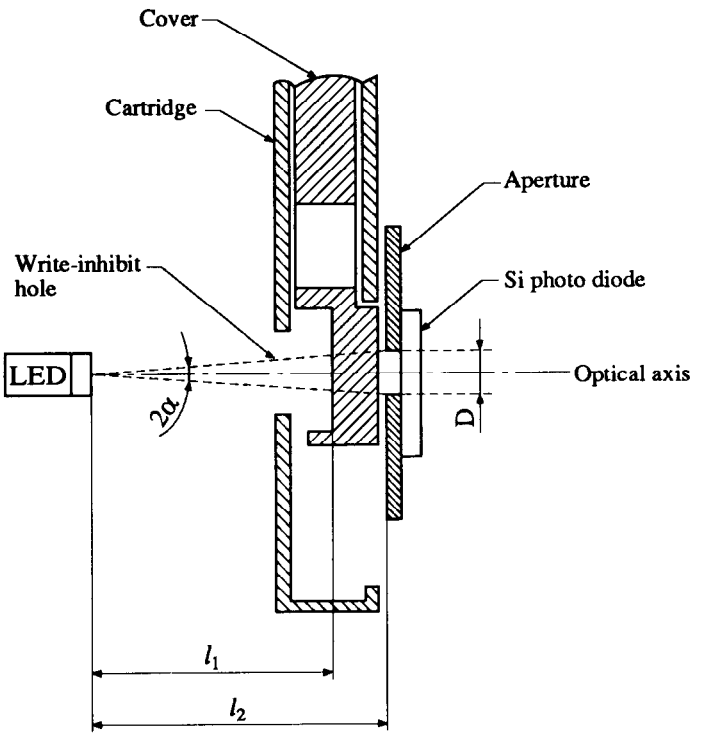

Figure B.1 - Measuring Device

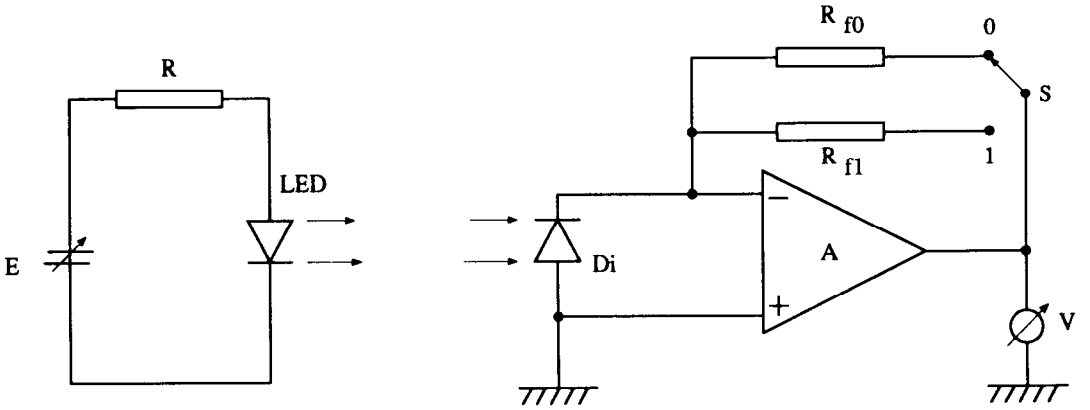

Figure B.2 - Electronic Circuitry

Copyright International Organization for Standardization
Provided by IHS under license with ISO
No reproduction or networking permitted without license from IHS
Not for Resale

Annex C

(normative)

Test for compliance

C.1 Purpose of the test

The purpose of this test is to determine whether the cartridge will maintain the proper plane of operation within the drive. This is achieved by supporting the cartridge at defined reference zone and applying forces opposite to the supports.

C.2 Locating of the zones

The location of the four zones a,b,c,d (figure C.1) is defined by

$l_5 = 80{,}0 \text{ mm} \pm 0{,}2 \text{ mm}$

$l_x = 62{,}0 \text{ mm} \pm 0{,}2 \text{ mm}$

Two of these zones, a and b, coincide with the Primary and the Secondary Locating holes, respectively.

C.3 Test device

The test device (figure C.2) consists of a base plate on which four posts are fixed so as to correspond to the four zones a,b,c,d. Posts P1, P2 correspond to the zones a and b, respectively. Posts P3, P4 correspond to zones c and d, respectively. A fifth post (P5) is mounted in the middle of the plate and corresponds to the drive spindle.

The dimensions of these posts are as follows (figure C.3):

a) Posts P1, P2

$d_1 = 6{,}00 \text{ mm} \pm 0{,}01 \text{ mm}$

$d_2 = 3{,}00 \text{ mm} \pm 0{,}01 \text{ mm}$

$h_1 = 1{,}00 \text{ mm max.}$

$h_2 = 2{,}00 \text{ mm max.}$

b) Post P3, P4

$d_5 = 6{,}00 \text{ mm} \pm 0{,}01 \text{ mm}$

c) Post P5

$d_3 = 12{,}70 \text{ mm} \pm 0{,}01 \text{ mm}$

$d_4 = 3{,}98 \text{ mm} \pm 0{,}01 \text{ mm}$

$h_3 = 2{,}20 \text{ mm} \begin{smallmatrix} +0{,}03 \\ -0{,}00 \end{smallmatrix} \text{ mm}$

$r = 2{,}50 \text{ mm} \pm 0{,}3 \text{ mm}$

d) After assembly, the upper annular surfaces of posts P1 to P4 shall lie between two horizontal planes spaced 0,02 mm apart.

C.4 Test requirement

When the cartridge is laid on these four posts and a vertical, downward force of 0,6 N is exerted simultaneously on each of the four zones, it shall meet the requirement of 9.7.

Copyright International Organization for Standardization
Provided by IHS under license with ISO
No reproduction or networking permitted without license from IHS Not for Resale

© ISO/IEC

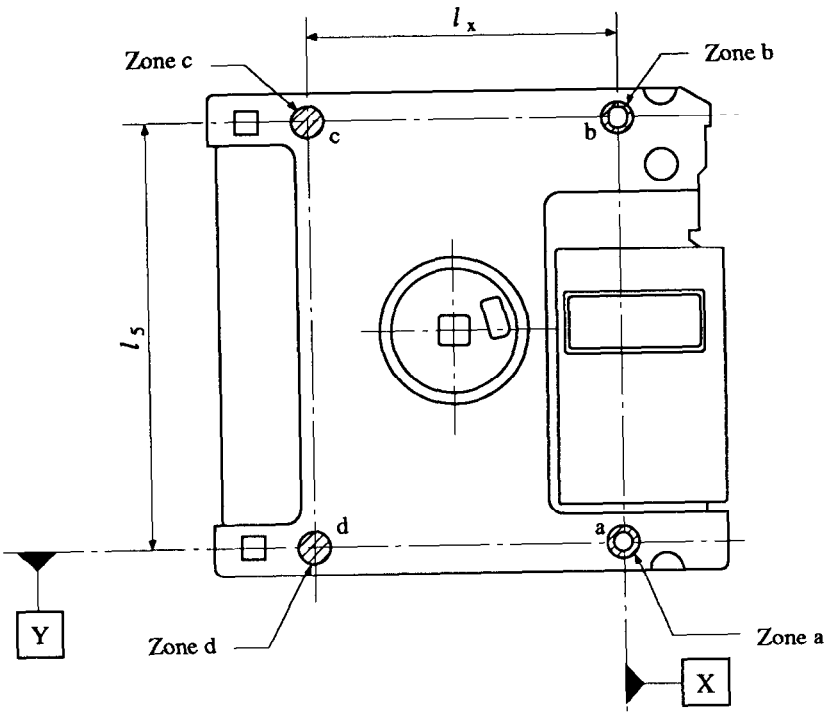

Figure C.1 - Location of the reference zones

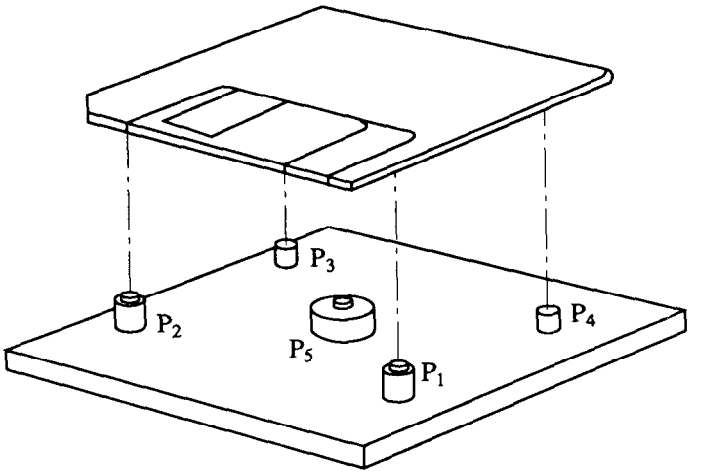

Figure C.2 - Test device

Copyright International Organization for Standardization
Provided by IHS under license with ISO
No reproduction or networking permitted without license from IHS
Not for Resale

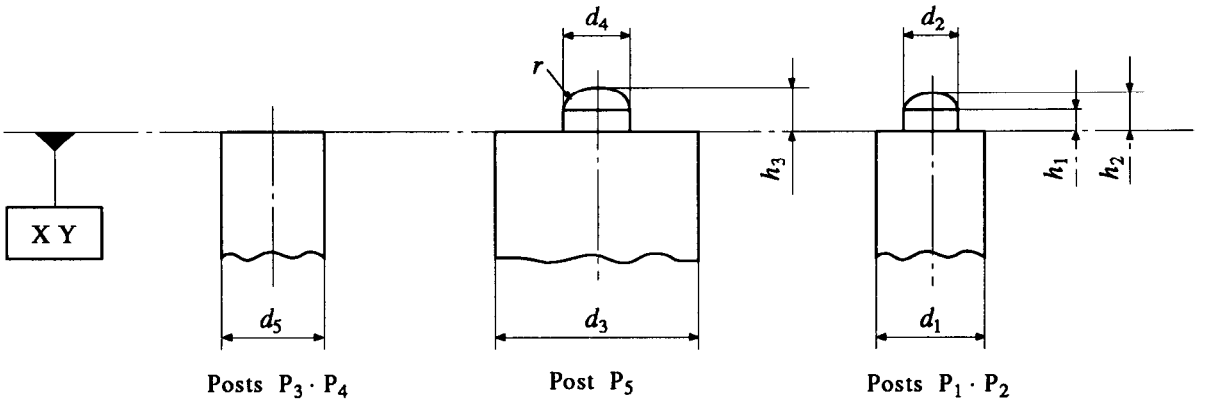

Figure C.3 - Dimensions of the posts

Copyright International Organization for Standardization
Provided by IHS under license with ISO
No reproduction or networking permitted without license from IHS
Not for Resale

Annex D

(normative)

Method for measuring the effective track width

D.1 Width of Data Tracks

On the Outer Zone, erase a 7-track wide band. Record at $3f_{OZ}$ in a track centred in the middle of the erased band.

For reading use a head the gap width of which is smaller than the expected track width. Move this head radially over the disk in increments not greater than 0,005 mm across the track. Determine the read back signal amplitude for each increments move and plot its amplitude versus displacement. See figure D.1 below, the effective track width is that of the segment A B.

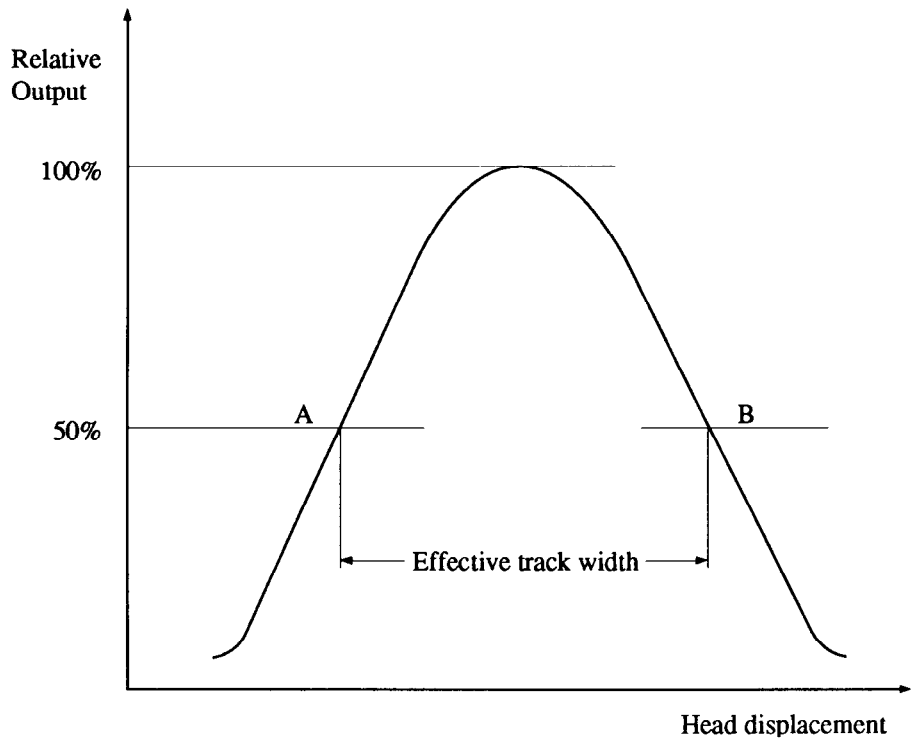

Figure D.1 - Effective track width of Data Tracks

Copyright International Organization for Standardization
Provided by IHS under license with ISO
No reproduction or networking permitted without license from IHS
Not for Resale

D.2 Width of Servo Tracks and pitch of Servo Tracks

For reading use a head the gap width of which is smaller than the expected Servo Track width.

a) Width of Servo Tracks

Move the head radially over the disk in increments not greater than 0,005 mm across the track. Determine the read back signal amplitude for each increments move and plot its amplitude versus displacement. See figure D.2 below for reading the head displacements A1 and B1 defined as the half signal amplitude of the maximum amplitude V_i. The effective track width is the difference of A1 and B1. In the same way, read the head displacements A2 and B2 of the next Servo Track.

b) Pitch of Servo Tracks

In the same way, the pitch of Servo Tracks is the difference of the central position of A1 and B1, and that of A2 and B2.

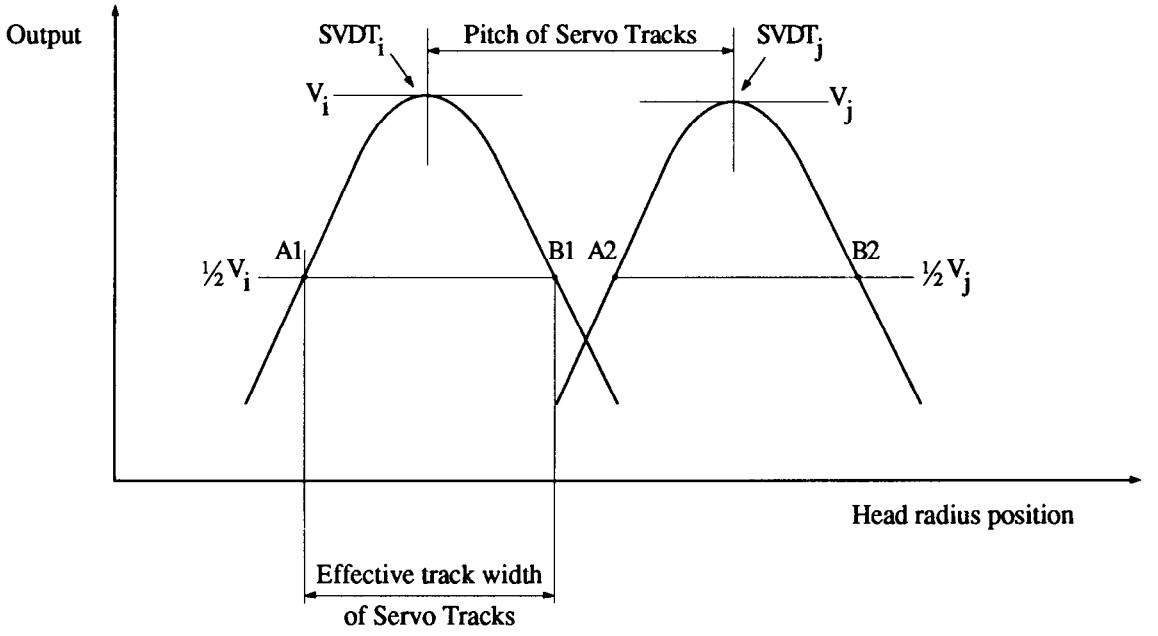

(i, j) = (1, 2) or (2, 3) or (3, 1)

Figure D.2 - Effective track width of Servo Tracks

Copyright International Organization for Standardization
Provided by IHS under license with ISO
No reproduction or networking permitted without license from IHS
Not for Resale

Annex E

(normative)

Head and read amplifier for functional testing

E.1 General

This annex specifies the head and the read amplifier for functional testing.

E.2 Test Equipment

E.2.1 Head

E.2.1.1 Resolution

The head shall have an absolute resolution of 70 % to 75 % at Track 325 on each side, using the Secondary Standard Reference Flexible Disk Cartridge, applying the calibration factor of the Reference Material appropriate to the side, and recording with the appropriate Test Recording Current.

The resonant frequency of the head shall be greater than 3 000 000 Hz.

The resolution shall not be adjusted by varying the load impedance of the head.

The resolution shall be measured at the output of the amplifier defined in E.2.2.

E.2.1.2 Overwrite

The head shall have an absolute overwrite of less than 5 % at Track 113 on Side 0 and Track 081 on Side 1, using the Secondary Standard Reference Flexible Disk Cartridge, applying the calibration factor of the Reference Material appropriate to the side, and recording with the appropriate Test Recording Current. The overwrite shall be measured at the output of the amplifier defined in E.2.2.

E.2.1.3 Offset angle (see 12.3)

The offset angle of the head shall be

$$\theta = arc\ \sin \frac{0,35}{Rn_D} \pm 0°15'$$

where Rn_D is the radius through that transition.

E.2.1.4 Contact

Care shall be taken that the heads are in good contact with the disk during tests.

E.2.2 Read amplifier

The read amplifier shall have a flat response from 30 000 Hz to 2 250 000 Hz within a 2 dB wide band, and amplitude saturation shall not occur.

The -3 dB roll off point shall be less than 3 000 000 Hz.

The attenuation above the -3 dB roll off point shall be not less than that given by a line drawn through 0 dB at the -3 dB roll off point with a slope of -12 dB/octave.

The phase shift shall be linear within a 10° wide band between 30 000 Hz and 2 250 000 Hz.

Copyright International Organization for Standardization
Provided by IHS under license with ISO
No reproduction or networking permitted without license from IHS Not for Resale

Annex F

(normative)

Method of measuring peak shift

F.1 Introduction

The resolution of a flexible disk system at the inner tracks, where the recording density is highest, must be sufficiently high to minimize the peak shift. However, it must not be too high at outer tracks, where the recording density is lowest, otherwise spurious read pulses may be generated.

This test controls the characteristics of the disk by measuring the peak shift at inner tracks and setting limits for the upper and lower values.

F.2 Description of the measuring equipment

F.2.1 Peak shift test drive

The test drive shall be any drive suitable for use at 31 831 ftprad in the Inner Zone and 47 747 ftprad in the Outer Zone.

F.2.2 Peak shift measurement circuit

The measurement circuit shall be as shown in figure F.1.

The operation of the circuit is illustrated in the timing diagram figure F.2 as follows:

a) Index pulse

The Index pulse represents the beginning and end of the track.

b) Index pulse timer

Index pulse timer is a 1 ms timer triggered by the Index pulse. Its output masks the discontinuities that occur in the recording when the write current is switched off.

c) Read signal

Read signal is the read-back signal of the test pattern. The positive-going edge of the first Channel bit of a pair triggers the flip-flop (LS74). The negative-going edge of the first Channel bit of a pair triggers the timer (LS221).

d) Bit period window

This is the output waveform of the timer (LS221). It allows the positive-going edge of the second Channel bit of a pair to reset the other flip-flop (LS74).

e) Bit period

The duration of the Channel bit period is the time interval T' between the two Channel bits of a pair of the read signal.

f) Sampling period

This period commences when the second flip-flop (LS74) is set by the trailing edge of d) after the Index pulse timer has reset.

It is terminated by the trailing edge of the first output pulse of the timer (LS221) to occur during the period of the next Index pulse timer.

g) Output

Bit period (e) is passed to the time interval counter during the sampling period (f).

F.2.3 Period of the timer (LS221)

The period of this timer shall be 0,75 µs.

Copyright International Organization for Standardization
Provided by IHS under license with ISO
No reproduction or networking permitted without license from IHS Not for Resale

F.2.4 Time interval counter

The counter shall have a resolution of 5 ns or better.

F.3 Test method

F.3.1 AC bulk-erase the disk cartridge.

F.3.2 Using the Test Recording Current, write the test pattern of Channel bits 1001000000 continuously on Track 325 on each side, commencing with the Index pulse and switching off the write current when the Index pulse is detected at the end of one revolution.

F.3.3 Read back on the same test drive and measure intervals T' on the time interval counter.

NOTE F.1 - To minimize errors due to changes in the rotational speed of the drive, it is essential that reading shall occur immediately after writing.

F.3.4 Sampling method

F.3.4.1 The data recording area extends from immediately after the leading edge of the Index pulse to immediately after the leading edge of the next Index pulse.

NOTE F.2 - Due to uncertainties of recording near the leading edge of the Index pulse, care must be taken not to sample the read signal in the region of uncertainty.

F.3.4.2 The sampling area extends from the resetting of the Index pulse timer to the leading edge of the next Index pulse (resulting from F.2.2 b).

F.3.4.3 The preferred sampling method is to measure every T' interval in the sampling area, if permitted by the sampling rate of the time interval counter. If the sampling rate of the counter prohibits the measurement of every T', then a lesser number of T' measurements shall be permitted, providing the sampling is random.

F.3.4.4 The minimum number of random samples shall be 1 000.

F.3.5 Asymmetry of the write waveform

To eliminate errors due to asymmetry of the write current waveform, repeat operations F.3.1 to F.3.4 using the test pattern of Channel bits 1000000100.

F.3.6 The operations specified in F.3.1 to F.3.5 shall be repeated for the Secondary Standard Reference Flexible Disk Cartridge.

F.4 Definitions

$$\text{Peak Shift} = \frac{\overline{T}'-T}{2}$$

where

T' is the mean period between pairs of $8f_{IZ}$ Channel bits in the read waveform.

T equals 0,5 µs, i.e. the period of the $8f_{IZ}$ pattern.

The peak shift value of the disk under test expressed as a percentage of that for the Master Standard Reference FDC shall be

$$\frac{P_t}{P_s} \times K_0 \ \%$$

where

P_t is the peak shift value obtained for the disk under test;

P_s is the peak shift value obtained for the Secondary Standard Reference FDC.

K_0 is the calibration factor in percent for the Secondary Standard Reference FDC relative to the Master Standard Reference FDC.

Copyright International Organization for Standardization
Provided by IHS under license with ISO
No reproduction or networking permitted without license from IHS Not for Resale

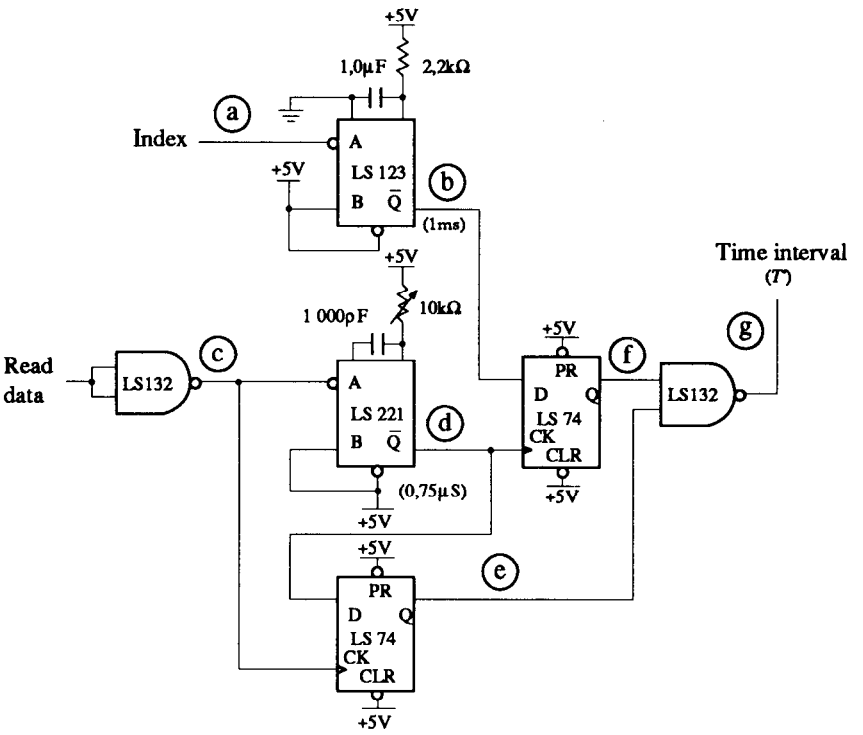

Figure F.1 - Measurement Circuit

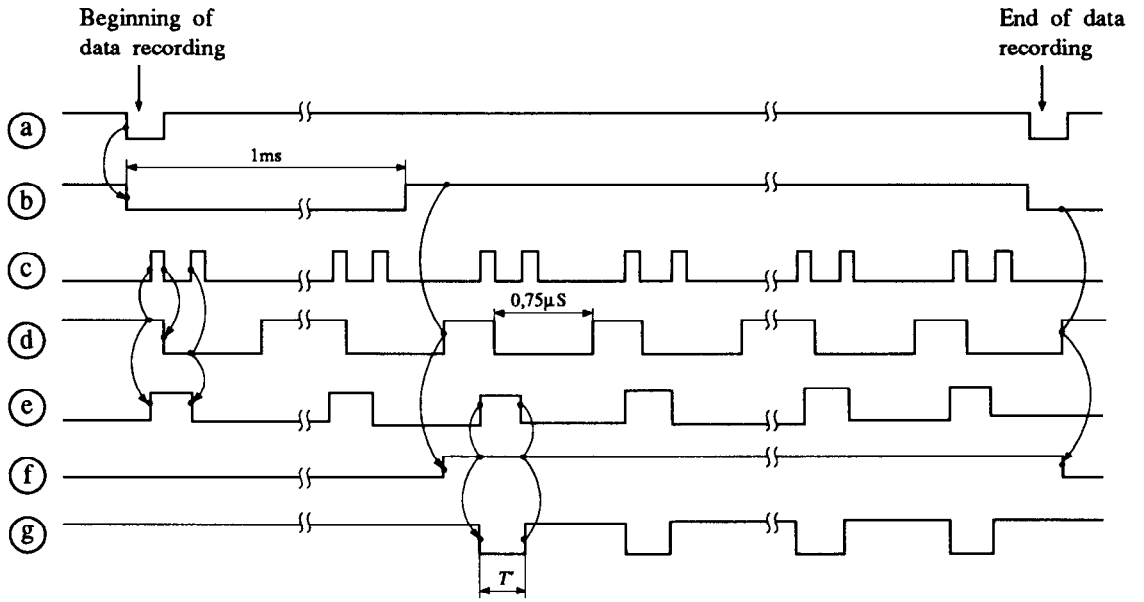

Figure F.2 - Timing Diagram

Copyright International Organization for Standardization
Provided by IHS under license with ISO
No reproduction or networking permitted without license from IHS
Not for Resale

Annex G

(normative)

Method for measuring overwrite

G.1 Output meter

Readings shall be taken with a frequency-selective voltmeter centred on 375 000 Hz and with a bandwidth of 5 000 Hz to 15 000 Hz.

G.2 Validation of the Test Drive

i) Insert the Secondary Standard Reference FDC into the Test Drive, load the head on Track 113 on Side 0 and run the drive for at least 3 minutes.

ii) Load the head on Track 081 on Side 1 and run the drive for at least 3 minutes.

iii) Erase Track 113 on Side 0; record at $3f_{IZ}$ on Track 113 for one revolution using the appropriate Test Recording Current.

iv) Read back and note the signal amplitude averaged over an integral number of revolutions.

v) Overwrite with $8f_{IZ}$ for one revolution.

vi) Read back and note the residual $3f_{IZ}$ signal amplitude averaged over an integral number of revolutions.

vii) The overwrite ratio is

$$\frac{\text{Residual Average Signal Amplitude at } 3f_{IZ} \text{ after overwriting with } 8f_{IZ}}{\text{Average Signal Amplitude after first recording using } 3f_{IZ}}$$

viii) The average of at least 5 such ratios, corrected by the appropriate calibration factor, shall not be greater than 0,05.

ix) Repeat steps iii) to viii) on Track 081 on Side 1 of the Secondary Standard Reference FDC.

G.3 Measurement of the overwrite ratio for the cartridge under test

Repeat steps G.2 iii) to G.2 vii) for both sides of the cartridge.

G.4 Result

For each side of the cartridge under test the average of at least 5 such ratios shall meet the requirement of 11.3.6.

Copyright International Organization for Standardization
Provided by IHS under license with ISO
No reproduction or networking permitted without license from IHS
Not for Resale

Annex H

(normative)

Procedure and equipment for measuring flux transition spacing

H.1 General

This annex specifies equipment and the procedure for measuring flux transition spacing of data recorded for data interchange on a 90 mm flexible disk cartridge using 2-7 RLL recording 31 831 ftprad in the Inner Zone, 47 747 ftprad in the Outer Zone and 21,3 tracks per mm on both sides.

H.2 Test equipment

H.2.1 Disk drive

The disk drive shall have a rotational speed of 600 rpm ± 6 rpm averaged over one revolution. The average angular speed taken over 20 µs shall not deviate by more than 0,2 % from the speed averaged over one revolution.

H.2.2 Head

The head shall be as specified in annex E, with the exception that the tolerance for the offset angle (see E.2.1.3) shall be 0° 0' ± 5' (instead of 0° 0' ± 15').

H.2.3 Read channel

The read channel shall be as specified in annex E. Peak sensing shall be carried out by a differentiating and limiting amplifier.

H.2.4 Time interval measuring resolution

The time interval counter shall be able to measure time intervals to 1,6 µs with a resolution of 5 ns or better. A triggering oscilloscope may be used for this purpose.

H.3 Procedure for measurement

H.3.1 Flux transition spacing measurement

The flux transition spacings shall be measured by measuring the time intervals between consecutive peaks in the read signal for 10^5 intervals of random sampling on a track, and plotting logarithmically the distribution of the time intervals as shown in figure H.1.

The measurements shall be made at the output of the read amplifier specified in H.2.3.

H.3.2 Flux transition spacing for all tracks

Measurement of time intervals t_1 to t_{12} shall be as shown below.

a) t_2/t_0 (x 100 %) and t_1/t_0 (x 100 %) correspond to the Channel bits pattern 1001 in 12.5.

b) t_4/t_0 (x 100 %) and t_3/t_0 (x 100 %) correspond to the Channel bits pattern 10001 in 12.5.

c) t_6/t_0 (x 100 %) and t_5/t_0 (x 100 %) correspond to the Channel bits pattern 100001 in 12.5.

d) t_8/t_0 (x 100 %) and t_7/t_0 (x 100 %) correspond to the Channel bits pattern 1000001 in 12.5.

e) t_{10}/t_0 (x 100 %) and t_9/t_0 (x 100 %) correspond to the Channel bits pattern 10000001 in 12.5.

f) t_{12}/t_0 (x 100 %) and t_{11}/t_0 (x 100 %) correspond to the Channel bits pattern 100000001 in 12.5.

t_0 is the short-term average Channel bit cell length of 0,111 µs nominal in the Outer Zone, and of 0,167 µs nominal in the Inner Zone.

Intervals which are out of specification due to data block splicings or index splicing may be neglected.

Copyright International Organization for Standardization
Provided by IHS under license with ISO
No reproduction or networking permitted without license from IHS Not for Resale

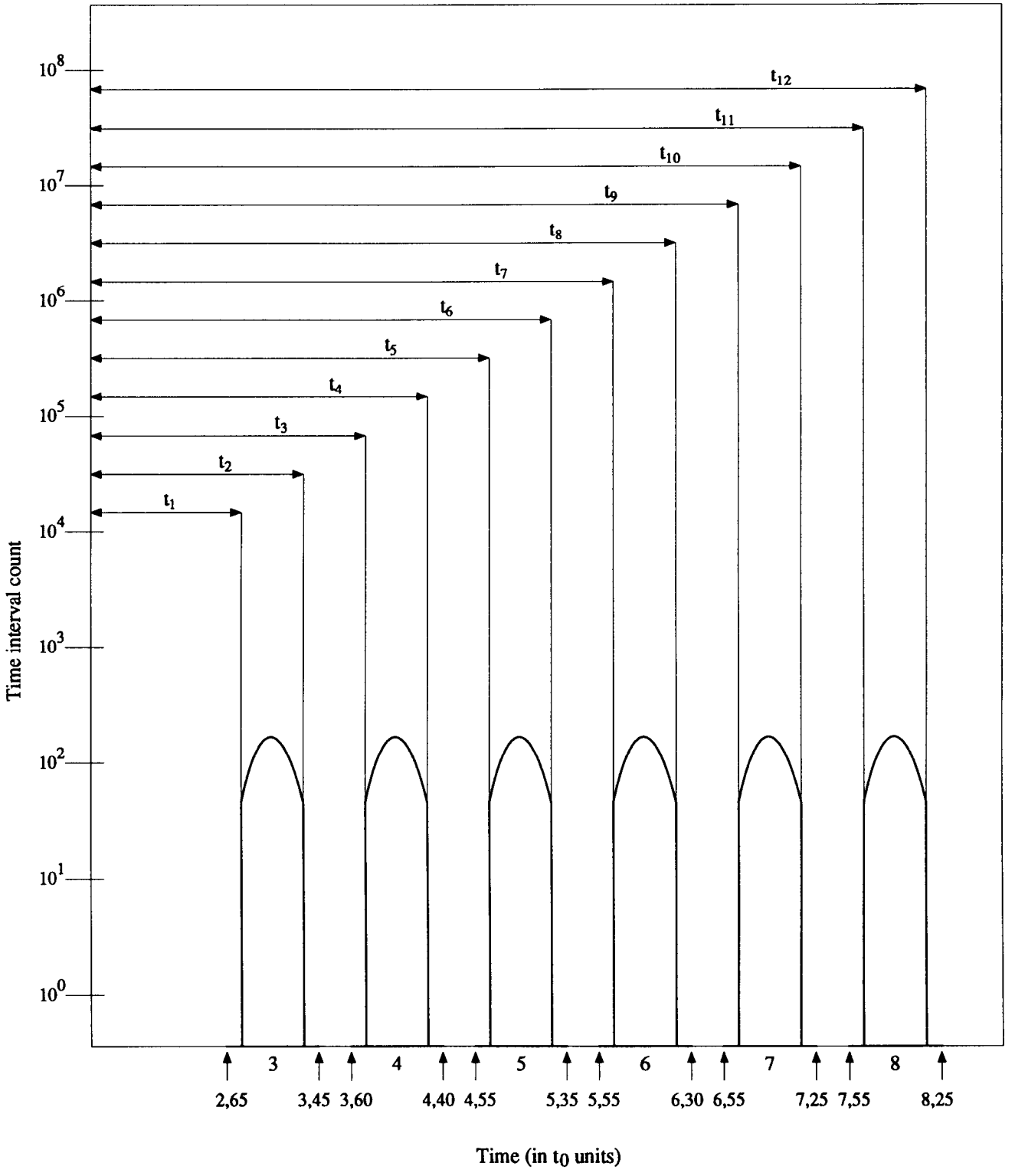

Figure H.1 - Flux transition spacing distribution

Copyright International Organization for Standardization
Provided by IHS under license with ISO
No reproduction or networking permitted without license from IHS
Not for Resale

Annex J

(normative)

Handling defective Data Sectors

J.1 General

This annex specifies the handling of defective Data Sectors,

J.2 Spare Sectors

When a defective Data Sector is detected, the content of the Data Block shall be recorded on a spare Data Sector, thus becoming a new Data Sector replacing the defective one. The locations of the defective Data Sector and of the replacement Data Sector shall be recorded on Track - 001, that is the Data Track allocated to the management of defective Data Sectors. The content of this Track - 001 is not specified by this International Standard. It is possible to replace a maximum of 163 defective Data Sectors on both sides.

Copyright International Organization for Standardization
Provided by IHS under license with ISO
No reproduction or networking permitted without license from IHS
Not for Resale

Annex K

(normative)

Method for measuring the eccentricity of Servo Tracks

K.1 For reading use a head the gap width of which is 0,044 mm ± 0,003 mm.

K.2 Move this head radially over the disk in increments not greater than 0,005 mm across two Servo Tracks. Determine the read back signal amplitude of the servo data of the same Servo Sector for each increments move and plot its amplitude versus the position of the head. See figure K.1 below for reading the head radius position *R* defined as the position at which the signal amplitudes of two radially adjacent servo data are equal.

K.3 Repeat K.2 for all the other Servo Sectors of the same Servo Track.

K.4 The eccentricity of the centreline of a Servo Track is the difference between the maximum and the minimum values of *R*.

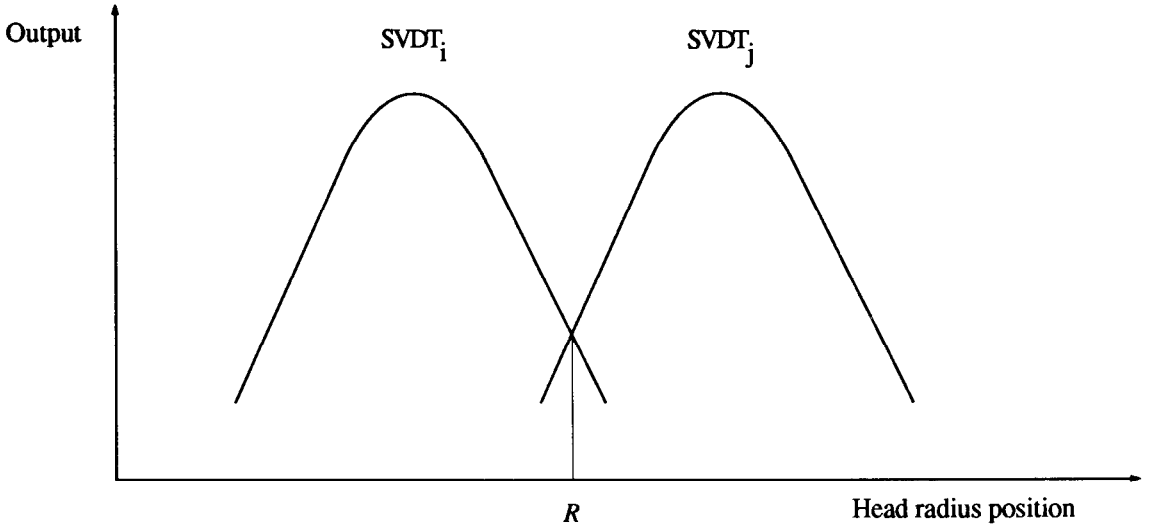

(i, j) = (1, 2) or (2, 3) or (3, 1)

Figure K.1 - Eccentricity of Servo Tracks

Copyright International Organization for Standardization
Provided by IHS under license with ISO
No reproduction or networking permitted without license from IHS
Not for Resale

Annex L

(normative)

Method of measuring the offset between Data Tracks and Servo Tracks

L.1 Move the head radially over the disk in increments not greater than 0,005 mm across the tracks.

L.2 For Data Sectors of Sector Block x, measure for each head position the average amplitude. Plot these amplitudes versus the head positions and determine the maximum value. The corresponding head position is the radius R_{dx} of the average centreline of the Data Sectors of Sector Block x.

L.3 For Sector Block x measure the average value of adjacent SVDTs and note the head position for which these values are equal (figure L.1). This head position is R_x.

L.4 Repeat L.3 for Sector Block x+1 to obtain R_{x+1}.

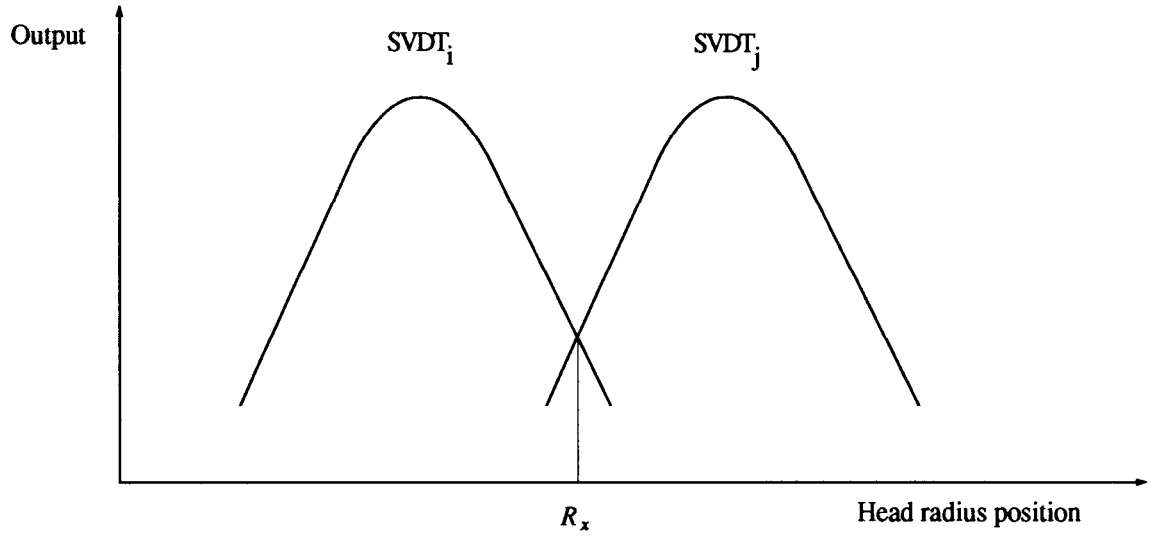

(i, j) = (1, 2) or (2, 3) or (3, 1)

Figure L.1 - SVDTs of equal output

Copyright International Organization for Standardization
Provided by IHS under license with ISO
No reproduction or networking permitted without license from IHS
Not for Resale

Annex M

(informative)

Torque measurements

M.1 Starting torque

Starting torque should be measured at a constant acceleration. In order to obtain reproducible measurements, acceleration should not be too fast.

M.2 Running torque

Running torque should be measured without acceleration at a constant speed of 600 rpm ± 6 rpm.

Copyright International Organization for Standardization
Provided by IHS under license with ISO
No reproduction or networking permitted without license from IHS
Not for Resale

Annex N

(informative)

Data separators for decoding 2-7 RLL recording

The 2-7 RLL recording method gives nominal flux transition spacings of

t for the Channel bits patterns 1001

4t/3 for the Channel bits patterns 10001

5t/3 for the Channel bits patterns 100001

2t for the Channel bits patterns 1000001

7t/3 for the Channel bits patterns 10000001

8t/3 for the Channel bits patterns 100000001

The data separator should be capable of resolving a difference of 0,111 μs in the Outer Zone, 0,167 μs in the Inner Zone. To achieve this with a low error rate, the data separator cannot operate on a fixed period but should follow changes in the Channel bit cell length.

It is recognized that only a data separator based on a phase-locked oscillator can provide the necessary reliability with present technology.

Copyright International Organization for Standardization
Provided by IHS under license with ISO
No reproduction or networking permitted without license from IHS
Not for Resale

Annex P

(informative)

EDC Implementation

P.1 EDC of a Data Sector Identifier

Figure P.1 shows the feedback connections of a bit shift register which may be used to generate the EDC bytes of the Data Sector Identifiers.

Prior to the operation, all positions of the shift register are set to ZERO. Input data are added (exclusive OR) to the contents of position C_{15} of the register to form a feedback. This feedback is in its turn added (exclusive OR) to the contents of position C_4 and position C_{11}.

On shifting, the outputs of the exclusive OR gates are entered respectively into positions C_0, C_5 and C_{12}. After the last data bit has been added, the register is shifted once more as specified above.

The register then contains the EDC bytes.

If further shifting is to take place during the writing of the EDC bytes, the control signal inhibits exclusive OR operations.

To check for errors when reading, the data bits are added into the shift register in exactly the same manner as they were during writing. After the data, the EDC bytes are also entered into the shift register as if they were data. After the final shift, the register contents will be set to all ZEROs if the record does not contain errors.

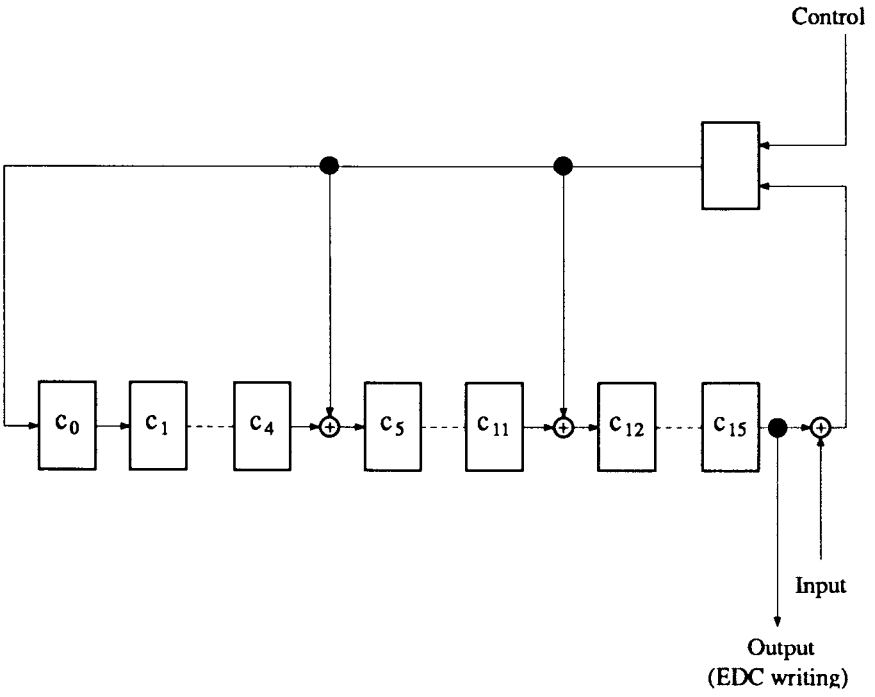

Figure P.1 - EDC shift register for the Data Sector Identifier

Copyright International Organization for Standardization
Provided by IHS under license with ISO
No reproduction or networking permitted without license from IHS
Not for Resale

P.2 EDC of Data Blocks

Figure P.2 shows the feed back connections of a byte shift register which may be used to generate the EDC bytes of the Data Blocks.

The dummy byte B_0, set to (FF), and 512 bytes (D_0 to D_{511}) of a Data Field are converted into 129 bytes according to the following method.

B_0, D_0, D_1 and D_2 are added (exclusive OR) to convert into one byte. Then D_3, D_4, D_5 and D_6 are added to convert into another one byte. Continue same procedure until only D_{511} remains. These 129 bytes (converted 128 bytes and D_{511}) are used to generate the EDC bytes of the Data Blocks.

Prior to the operation, all positions of the shift register are set to ZERO. Input data are added (exclusive OR) to the contents of positions C_0, C_1 and C_2 of the register to form feedbacks. These feedbacks are in turn entered respectively into the multipliers m_0, m_1 and m_2. The outputs of the multiplier m_0, m_1 and m_2 are entered respectively into positions C_0, C_1 and C_2. After the last data byte has been processed, the register contains the EDC bytes.

The control signal outputs the contents of the register in order of C_0, C_1 and C_2 during the writing of the EDC bytes.

To check for errors when reading, the data bytes are processed exactly the same manner as they were during writing. After the data, the EDC bytes are also processed as if they were data. After the first EDC byte is processed, the contents of C_0 will be set to all ZEROs, and after the second EDC byte is processed, the contents of C_1 will be set to all ZEROs, and after the third EDC byte is processed, the contents of C_2 will be set to all ZEROs if the Data Block contains no errors.

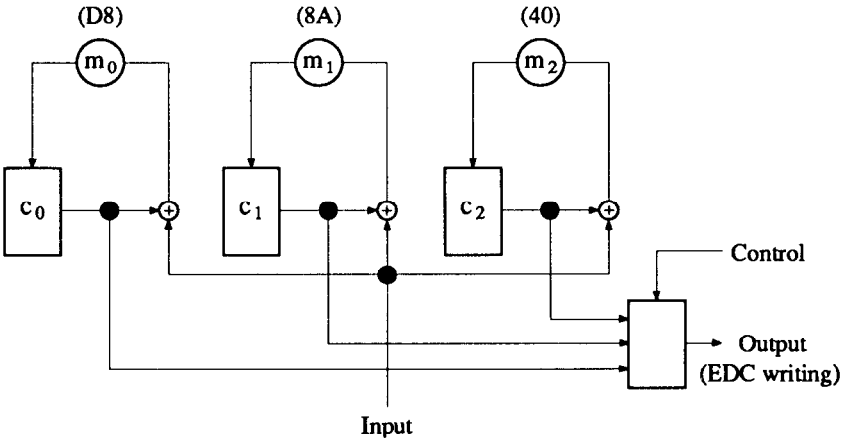

Figure P.2 - EDC shift register for Data Blocks

Copyright International Organization for Standardization
Provided by IHS under license with ISO
No reproduction or networking permitted without license from IHS
Not for Resale

Annex Q

(informative)

ECC Implementation

Figure Q.1 shows the feed back connections of a byte shift register which may be used to generate the ECC bytes. Prior to the operation, all positions of the shift register are set to ZERO.

Input data are added (exclusive OR) to the contents of position C_5 of the register to form a feedback.

This feedback is in turn entred into multipliers m_0, m_1, m_2, m_3, m_4 and m_5. Then the output of multipliers m_1, m_2, m_3, m_4 and m_5 are added (exclusive OR) respectively to the contents of positions C_0, C_1, C_2, C_3 and C_4. On shifting, the output of multiplier m_0 and outputs of exclusive OR gates are entred into positions C_0, C_1, C_2, C_3, C_4 and C_5, respectively. After the last data byte has been entred, the register is shifted once more as specified above. The register then contains the ECC bytes.

If further shifting is to take place during the writing of the ECC bytes, the control signal inhibits exclusive OR operations.

To check for errors when reading, the data bytes are processed in exactly the same manner as they were during writing. After the data, the ECC bytes are also processed as if they were data. After the final shift, the register contents will be all set to all ZEROs if the record does not contain errors.

The input data and output ECC bytes should be as specified in 13.1.4.4.

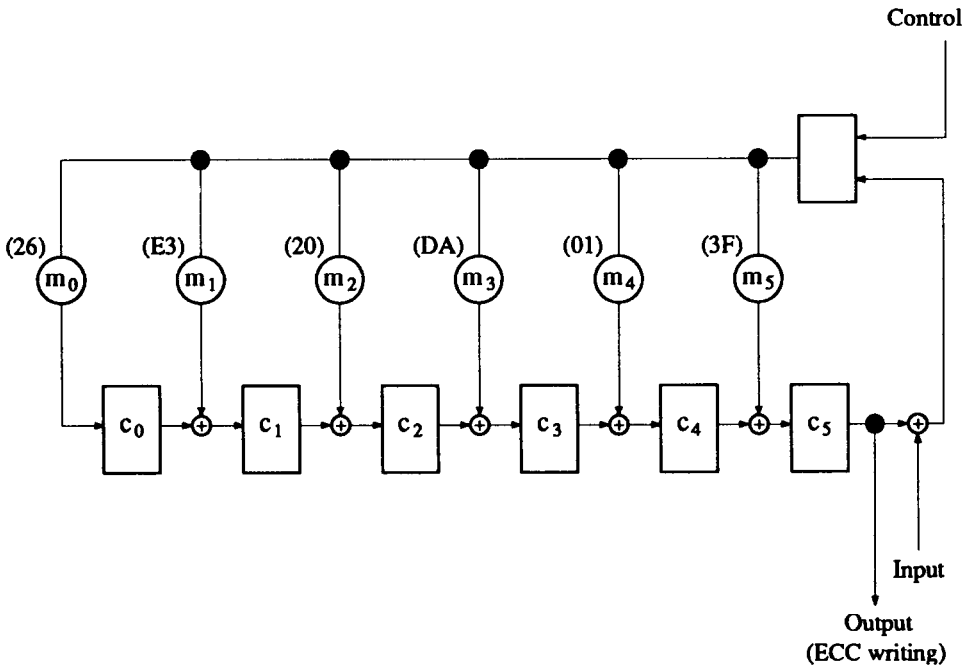

Figure Q.1 - ECC shift register

Copyright International Organization for Standardization
Provided by IHS under license with ISO
No reproduction or networking permitted without license from IHS
Not for Resale

Annex R

(informative)

Servo Track recording conditions

The Servo Track recording conditions are as follows.

a) Recording current

The recording current should be between 178 % and 182 % of the current generated by the Reference Field when the $8f_{IZ}$ signal is recorded on Track 325.

b) Direct current erase

Direct current erase should precede the recording operation. The erase current should be approximately equal to the recording current.

c) Rotational speed of the disk

The rotational speed of the disk should be 600 rpm ± 3 rpm. The direction of rotation should be counter-clockwise as seen from Side 0 of the flexible disk cartridge.

d) Effective track width of magnetic head

The width of the tracks written by the magnetic head when recording the servo signal should be

0,044 mm ± 0,003 mm

e) Polarity of Servo Data 1 (SVDT 1)

The polarity of the flux transitions of the servo signal of all SVDT 1 on Servo Track -10,5 to Servo Track -4,5 should be the same.

Copyright International Organization for Standardization
Provided by IHS under license with ISO
No reproduction or networking permitted without license from IHS Not for Resale

Annex S

(informative)

Method for measuring the displacement of the head due to amplitude fluctuations of servo data

S.1 General

The displacement due to the amplitude fluctuation of the servo data should be measured using the measuring instruments shown in figure S.1.

S.2 Test equipment

S.2.1 Disk drive

The disk drive should be as specified in H.2.1 of annex H.

S.2.2 Head

The head should be as specified in H.2.2 of annex H.

S.2.3 Read amplifier

The read amplifier should be as specified in E.2.2 of annex E.

S.2.4 Servo Identifier detector

Receives the signal from the read amplifier and detects the Servo Identifier signal.

S.2.5 Timing generator

Receives the Servo Identifier signal and generates the timing pulses which indicate the beginning of the following servo data.

S.2.6 Peak detector

Receives the signal from the read amplifier and detects the radial displacement of the magnetic head from the signal amplitude of the servo data.

S.2.7 Arithmetic controller

Receives the signal of magnetic head displacement from the peak detector and timing pulses from the timing generator and then calculates the location which is specified in 14.4 to generate the signal for moving the magnetic head.

S.2.8 Displacement meter

An optical displacement meter is installed on the pulse motor to detect the displacement of magnetic head on each Servo Sector.

S.2.9 Fast Fourier Transform device (FFT)

This device receives 28 timing pulses from the timing generator and 28 signals of magnetic head displacement from the displacement meter in one revolution, and calculates their Fourier Transform.

The first and second order eccentricity components should be eliminated, and the remaining higher order eccentricity components should be used to determine the fluctuation of the servo data amplitude.

Copyright International Organization for Standardization
Provided by IHS under license with ISO
No reproduction or networking permitted without license from IHS Not for Resale

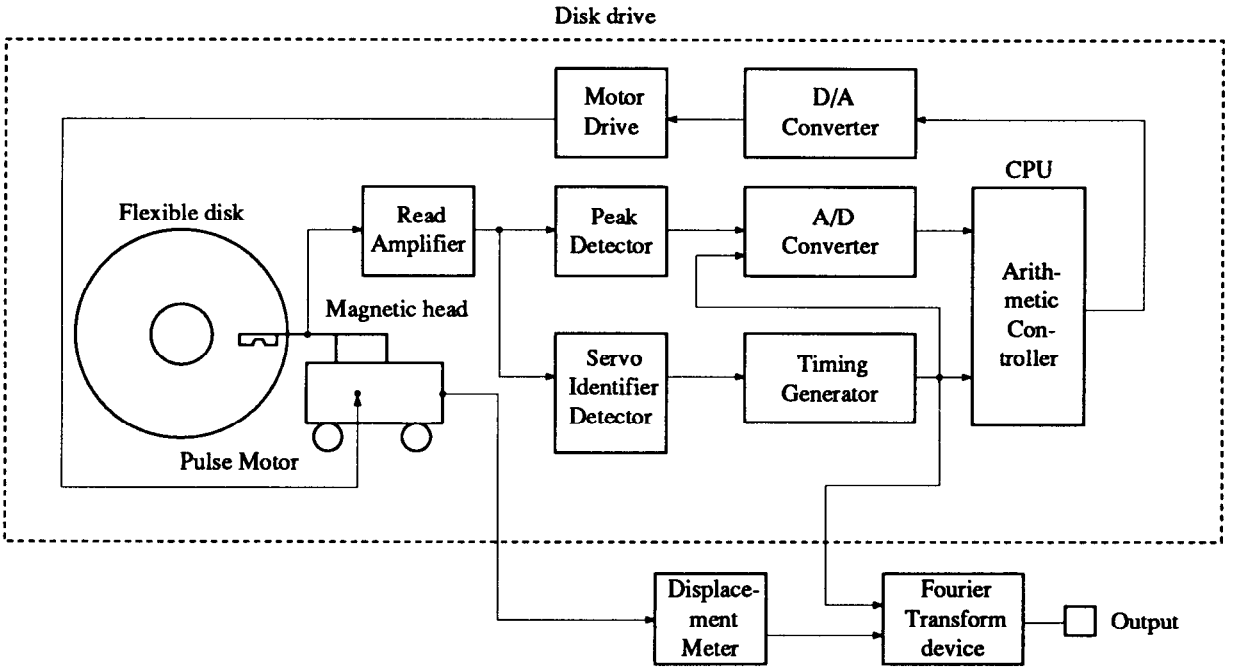

Figure S.1 - Measuring method of the displacement due to the amplitude fluctuation of servo data

Copyright International Organization for Standardization
Provided by IHS under license with ISO
No reproduction or networking permitted without license from IHS
Not for Resale

Annex T

(informative)

Institute supplying Secondary Standard Reference Flexible Disk Cartridges

T.1 Institute

The Secondary Standard Reference Flexible Disk Cartridges are available from the following institute

Reliability Centre for Electronic Components of Japan (RCJ)

Address: 1-1-12 Hachiman-cho, Higashikurume-shi, Tokyo, Japan

Postal code: 203

Fax: + 81 424 72.49.61

Telephone: + 81 424 71.51.42

NOTE T.1 - When the order is made by fax, the fax number of the purchaser should be clearly indicated.

T.2 Part Number

Secondary Standard Reference Flexible Disk Cartridges can be ordered under Part Number JRM 6228 (90 mm, 31 831 ftprad / 47 747 ftprad).

Copyright International Organization for Standardization
Provided by IHS under license with ISO
No reproduction or networking permitted without license from IHS Not for Resale

© ISO/IEC

ICS 35.220.20

Descriptors: data processing, information interchange, data recording, data recording devices, magnetic recording, magnetic disks, flexible disk cartridges, specifications, dimensions, physical properties, mechanical properties, magnetic properties, track formats, interchangeability.

Price based on 60 pages

Copyright International Organization for Standardization
Provided by IHS under license with ISO
No reproduction or networking permitted without license from IHS

Not for Resale