INTERNATIONAL STANDARD

# ISO/IEC 13963

First edition
1995-04-15

# Information technology — Data interchange on 90 mm optical disk cartridges — Capacity: 230 megabytes per cartridge

*Technologies de l'information — Échange de données sur cartouches pour disque optique de diamètre* 90 mm *— Capacité: 230 mégabytes par cartouche*




Reference number
ISO/IEC 13963:1995(E)

Copyright International Organization for Standardization
Provided by IHS under license with ISO
No reproduction or networking permitted without license from IHS

Not for Resale

## Contents


| | Page |
|---|---|
| **Section 1 - General** | 1 |
| **1 Scope** | 1 |
| **2 Conformance** | 1 |
| **2.1** Optical disk cartridge (ODC) | 1 |
| **2.2** Generating system | 1 |
| **2.3** Receiving system | 2 |
| **2.4** Compatibility statement | 2 |
| **3 Normative reference** | 2 |
| **4 Definitions** | 2 |
| **4.1** band | 2 |
| **4.2** case | 2 |
| **4.3** Channel bit | 2 |
| **4.4** clamping zone | 2 |
| **4.5** control track | 2 |
| **4.6** Cyclic Redundancy Check (CRC) | 2 |
| **4.7** defect managemen | 2 |
| **4.8** disk reference plane | 2 |
| **4.9** embossed mark | 2 |
| **4.10** entrance surface | 2 |
| **4.11** Error Correction Code (ECC) | 2 |
| **4.12** field | 2 |
| **4.13** format | 2 |
| **4.14** fully embossed disk | 2 |
| **4.15** fully rewritable disk | 2 |
| **4.16** groove | 2 |
| **4.17** hub | 2 |
| **4.18** interleaving | 2 |
| **4.19** Kerr rotation | 3 |
| **4.20** land and groove | 3 |
| **4.21** logical track | 3 |
| **4.22** mark | 3 |
| **4.23** optical disk | 3 |
| **4.24** optical disk cartridge (ODC) | 3 |
| **4.25** partially embossed disk | 3 |
| **4.26** physical track | 3 |
| **4.27** physical track group | 3 |
| **4.28** pitch | 3 |
| **4.29** polarization | 3 |


© ISO/IEC 1995
All rights reserved. Unless otherwise specified, no part of this publication may be reproduced or utilized in any form or by any means, electronic or mechanical, including photocopying and microfilm, without permission in writing from the publisher.

ISO/IEC Copyright Office • Case postale 56 • CH-1211 Genève 20 • Switzerland

Printed in Switzerland

Copyright International Organization for Standardization
Provided by IHS under license with ISO
No reproduction or networking permitted without license from IHS
Not for Resale

**4.30** read power 3
**4.31** recording layer 3
**4.32** Reed-Solomon code 3
**4.33** sector 3
**4.34** spindle 3
**4.35** substrate 3
**4.36** ZCAV 3
**4.37** zone 3

**5 Conventions and notations** 3

**5.1** Representation of numbers 3
**5.2** Names 4

**6 List of acronyms** 4

**7 General description of the optical disk cartridge** 4

**8 General requirements** 5

**8.1** Environments 5

**8.1.1** Testing environment 5
**8.1.2** Operating environment 5
**8.1.3** Storage environment 5
**8.1.4** Transportation 5

**8.2** Temperature shock 6
**8.3** Safety requirements 6
**8.4** Flammability 6

**9 Reference Drive** 6

**9.1** Optical system 6
**9.2** Optical beam 7
**9.3** Read channels 8
**9.4** Tracking 8
**9.5** Rotation of the disk 8

**Section 2 - Mechanical and physical characteristics** 9

**10 Dimensional and physical characteristics of the case** 9

**10.1** General description of the case 9
**10.2** Reference planes of the case 9

**10.3** Dimensions of the case 9

**10.3.1** Overall dimensions 9
**10.3.2** Location hole 10
**10.3.3** Alignment hole 10
**10.3.4** Reference surfaces 10
**10.3.5** Detents 11
**10.3.6** Functional Areas 11
**10.3.7** Spindle and head windows 12
**10.3.8** Shutter 13
**10.3.9** Path for shutter opener and shutter sensor notch 13
**10.3.10** Mis-insert protections 14



Copyright International Organization for Standardization
Provided by IHS under license with ISO
No reproduction or networking permitted without license from IHS Not for Resale

**10.3.11** Gripper slots 14
**10.3.12** Label area 15

**10.4** Mechanical characteristics 15

**10.4.1** Material 15
**10.4.2** Mass 15
**10.4.3** Edge distortion 15
**10.4.4** Compliance 15
**10.4.5** Shutter opening force 15

**11 Dimensional, mechanical and physical characteristics of the disk** 27

**11.1** General description of the disk 27
**11.2** Reference axis and plane of the disk 27

**11.3** Dimensions of the disk 27

**11.3.1** Hub dimensions 27
**11.3.2** Clamping zone 28

**11.4** Mechanical characteristics 29

**11.4.1** Material 29
**11.4.2** Mass 29
**11.4.3** Moment of inertia 29
**11.4.4** Imbalance 29
**11.4.5** Axial deflection 29
**11.4.6** Axial acceleration 29
**11.4.7** Radial runout 29
**11.4.8** Radial acceleration 30
**11.4.9** Tilt 30

**11.5** Optical characteristics 30

**11.5.1** Index of refraction 30
**11.5.2** Thickness of the substrate 30
**11.5.3** Birefringence 30
**11.5.4** Reflectance 30

**12 Interface between cartridge and drive** 31

**12.1** Clamping method 31
**12.2** Clamping force 31
**12.3** Capture cylinder 31
**12.4** Disk position in operating condition 31

**Section 3 - Format of information** 33

**13 Geometry of physical tracks** 33

**13.1** Physical track shape 33
**13.2** Direction of track spiral 33

**14 Track format** 33

**14.1** Track number 33
**14.2** Track layout 33
**14.3** Clock frequencies and periods 33



Copyright International Organization for Standardization
Provided by IHS under license with ISO
No reproduction or networking permitted without license from IHS Not for Resale

**14.4** Radial alignment 34
**14.5** Sector number 34

**15 Sector format** 34

**15.1** Sector layout 34
**15.2** Sector Mark (SM) 35
**15.3** VFO fields 36
**15.4** Address Mark (AM) 36
**15.5** ID fields 37
**15.6** Postambles (PA) 37
**15.7** Offset Detection Field (ODF) 37
**15.8** Gap 37
**15.9** Sync 37
**15.10** Data field 37
**15.10.1** User data bytes 37
**15.10.2** CRC and ECC bytes 38
**15.10.3** Resync bytes 38
**15.11** Buffer field 38

**16 Recording code** 38

**17 Format of the Information Zone** 39

**17.1** General description of the Information Zone 39
**17.2** Division of the Information Zone 39
**17.2.1** Initial Zone 40
**17.2.2** Acquire Zone 40
**17.2.3** Test Zones 40
**17.2.4** Control Zones 41
**17.2.5** Data Zone 41
**17.2.6** Buffer Zone 41

**18 Format of the Data Zone** 41

**18.1** Buffer tracks in the Data Zone 42
**18.2** Defect Management Areas (DMAs) 42
**18.3** Disk Definition Structure (DDS) 43
**18.3.1** Fully rewritable disks 44
**18.3.2** Fully embossed disks 45
**18.3.3** Partially embossed disks 45
**18.4** Partitioning 45
**18.4.1** Fully rewritable disks 45
**18.4.2** Partially embossed disks 45
**18.4.3** Fully embossed disks 45

**19 Defect management** 48

**19.1** Rewritable groups: Spare sector 48
**19.1.1** Initialization of the disk 48



Copyright International Organization for Standardization
Provided by IHS under license with ISO
No reproduction or networking permitted without license from IHS
Not for Resale

**19.1.2** Certification 48
**19.1.3** Disks not certified 48
**19.1.4** Write procedure 49
**19.1.5** Primary Defect List (PDL) 49
**19.1.6** Secondary Defect List (SDL) 49

**19.2** Embossed groups: Parity sectors 50

**Section 4 - Characteristics of embossed information** 52

**20 Method of testing** 52

**20.1** Environment 52

**20.2** Use of the Reference Drive 52

**20.2.1** Optics and mechanics 52
**20.2.2** Read power 52
**20.2.3** Read channels 52
**20.2.4** Tracking 52

**20.3** Definition of signals 52

**21 Signals from grooves** 55

**21.1** Cross-track signal 55
**21.2** Cross-Track minimum signal 55
**21.3** Push-pull signal 55
**21.4** Divided push-pull signal 56
**21.5** Phase depth 57
**21.6** Track location 57

**22 Signals from Headers** 57

**22.1** Sector Mark 57
**22.2** $VFO_1$ and $VFO_2$ 57
**22.3** Address Mark, ID field and Postamble 57

**23 Signals from embossed Recording fields** 57

**Section 5 - Characteristics of the recording layer** 58

**24 Method of testing** 58

**24.1** Environment 58

**24.2** Reference Drive 58

**24.2.1** Optics and mechanics 58
**24.2.2** Read power 58
**24.2.3** Read channel 58
**24.2.4** Tracking 58

**24.3** Write conditions 58

**24.3.1** Write pulse 58
**24.3.2** Write power and pulse width 59
**24.3.3** Write magnetic field 60

**24.4** Erase conditions 60

Copyright International Organization for Standardization
Provided by IHS under license with ISO
No reproduction or networking permitted without license from IHS Not for Resale

**24.4.1** Erase power 60
**24.4.2** Erase magnetic field 60

**24.5** Definition of signals 60

**25 Magneto-optical characteristics** 60

**25.1** Figure of merit 59
**25.2** Imbalance of the magneto-optical signal 61

**26 Write characteristics** 61

**26.1** Resolution 61
**26.2** Narrow-band signal-to-noise ratio 61
**26.3** Cross-talk 62

**27 Erase characteristics** 62

**Section 6 - Characteristics of user data** 63

**28 Method of testing** 63

**28.1** Environment 63

**28.2** Reference Drive 63

**28.2.1** Optics and mechanics 63
**28.2.2** Read power 63
**28.2.3** Read amplifiers 63
**28.2.4** Analog-to-binary converters 63
**28.2.5** Error correction 63
**28.2.6** Tracking 63

**29 Minimum quality of a sector** 63

**29.1** Headers 64

**29.1.1** Sector Mark 64
**29.1.2** ID fields 64

**29.2** User-written data 64
**29.3** Embossed data 64

**30 Data interchange requirements** 64

**30.1** Tracking 64
**30.2** User-written data 64
**30.3** Embossed data 64
**30.4** Quality of disk 64

**Annexes**

**A** - Edge distortion test 65
**B** - Compliance test 66
**C** - Track deviation measurement 68
**D** - CRC for ID fields 72
**E** - Format of the Data field of a sector 73
**F** - Contents of the Control Zones 76

Copyright International Organization for Standardization
Provided by IHS under license with ISO
No reproduction or networking permitted without license from IHS Not for Resale

**G** - Guidelines for sector replacement **84**
**H** - Measurement of the figure of merit **85**
**J** - Read power, write power and erase power **86**
**K** - Test method for measuring the adsorbent force of the hub **87**
**L** - Derivation of the operating climatic environment **89**
**M** - Air cleanliness class 100 000 **93**
**N** - Position of the cartridge relative to the reference planes **94**
**P** - Transportation **95**
**Q** - Office environment **96**
**R** - Relaxation by zones of the requirements for signals **97**
**S** - Values to be implemented in existing and future standards **98**

Copyright International Organization for Standardization
Provided by IHS under license with ISO
No reproduction or networking permitted without license from IHS
Not for Resale

## Foreword

ISO (the International Organization for Standardization) and IEC (the International Electrical Commission) form the specialised system for world-wide standardization. National Bodies that are members of ISO or IEC participate in the development of International Standards through technical committees established by the respective organization to deal with particular fields of mutual interest. Other international organizations, governmental and non-governmental, in liaison with ISO and IEC, also take part in the work.

In the field of information technology, ISO and IEC have established a joint technical committee ISO/IEC JTC 1. Draft International Standards adopted by the joint technical committee are circulated to national bodies for voting. Publication as an International Standard requires approval by at least 75 % of the national bodies casting a vote.

International Standard ISO/IEC 13963 was prepared by the European Association for Standardizing Information and Communication Systems, ECMA, (as ECMA-201) and was adopted, under a special "fast-track procedure", by Joint Technical Committee ISO/IEC JTC 1, *Information technology*, in parallel with its approval by national bodies of ISO and IEC.

Annexes A, B, D, E, F, H, K, M, N, R form an integral part of this International Standard. Annexes C, G, J, L, P, Q and S are for information only.

Copyright International Organization for Standardization
Provided by IHS under license with ISO
No reproduction or networking permitted without license from IHS
Not for Resale

## Introduction

Technical Committee ECMA TC31 for Optical Disk Cartridges (ODC) was set up in 1984. The Committee made major contributions to ISO/IEC JTC1/SC23 for the development of standards for 90 mm, 120 mm, 130 mm, 300 mm and 356 mm ODCs.

A trend towards more Types and increasing capacities is followed by 90 mm ODCs based on the optical disk cartridge specified in ISO/IEC 10090.

This International Standard belongs to the 90 mm ODC series. It specifies three Types providing a capacity of 230 Megabytes per cartridge.

Copyright International Organization for Standardization
Provided by IHS under license with ISO
No reproduction or networking permitted without license from IHS
Not for Resale

# Information technology - Data interchange on 90 mm optical disk cartridges - Capacity: 230 megabytes per cartridge

## Section 1 : General

## 1 Scope

This International Standard specifies the characteristics of 90 mm Optical Disk Cartridges (ODC) with a capacity of 230 Mbytes per Cartridge. The Standard specifies three related, but different implementations of such cartridges, viz.

**Type R/W** Provides for data to be written, read and erased many times over the whole recording surface of the disk using the thermo-magnetic and magneto-optical effects.

**Type P-ROM** Provides for a part of the disk surface to be embossed by stamping or other means. This part of the disk is read without recourse to the magneto-optical effect. All parts which are not embossed provide for data to meet the requirements of Type R/W.

**Type O-ROM** Provides for the whole of the disk surface to be embossed and reproduced by stamping or other means. This type of disk is read without recourse to the magneto-optical effect.

Type R/W, Type P-ROM and Type O-ROM are also referred to as "fully rewritable", "partially embossed" and "fully embossed", respectively.

This International Standard specifies

- the conditions for conformance testing and the Reference Drive;
- the environments in which the cartridges are to be operated and stored;
- the mechanical and physical characteristics of the cartridge, so as to provide mechanical interchangeability between data processing systems;
- the format of the information on the disk, both embossed and user-written; including the physical disposition of the tracks and sectors, the error correction codes, and the modulation method used;
- the characteristics of the embossed information on the disk;
- the magneto-optical characteristics of the disk, enabling processing systems to write data onto the disk;
- the minimum quality of user-written data on the disk, enabling data processing systems to read data from the disk.

This International Standard provides for interchange between optical disk drives. Together with a standard for volume and file structure, it provides for full data interchange between data processing systems.

## 2 Conformance

### 2.1 Optical disk cartridge (ODC)

An optical disk cartridge claiming conformance with this International Standard shall specify its Type. It shall be in conformance if it meets all mandatory requirements specified herein for that Type.

Annex R specifies the zones of the disk in which the requirements for the signal characteristics given in the body of this International Standard shall be met, and the zones in which a relaxation of these requirements is permitted.

### 2.2 Generating system

A claim of conformance with this International Standard shall specify which Type(s) is (are) supported. A system generating an ODC for interchange shall be entitled to claim conformance with this International Standard if it meets the mandatory requirements of this Standard for the Type(s) specified.



Copyright International Organization for Standardization
Provided by IHS under license with ISO
No reproduction or networking permitted without license from IHS Not for Resale

### 2.3 Receiving system

A claim of conformance with this International Standard shall specify which Type(s) is (are) supported. A system receiving an ODC for interchange shall be entitled to claim conformance to this International Standard if it is able to process any recording made on the cartridge in accordance with 2.1 on the Type(s) specified.

### 2.4 Compatibility statement

A claim of conformance by a Generating or Receiving system with this International Standard shall include a statement listing any other ECMA and International Standard supported. This statement shall specify the number of the Standard(s), the ODC type(s) supported (where appropriate) and whether support includes reading only or both reading and writing.

## 3 Normative reference

The following standard contains provisions which, through reference in this text, constitute provisions of this International Standard. At the time of publication, the edition indicated was valid. All standards are subject to revision, and parties to agreements based on this International Standard are encouraged to investigate the possibility of applying the most recent edition of the standard listed below. Members of IEC and ISO maintain registers of currently valid standards.

IEC 950:1991, *Safety of information technology equipment including electrical business equipment.*

## 4 Definitions

For the purpose of this International Standard the following definitions apply.

**4.1 band:** Part of the Data Zone comprising a fixed number of consecutive physical tracks.

**4.2 case:** The housing for an optical disk, that protects the disk and facilitates disk interchange.

**4.3 Channel bit:** The smallest element for the representation of data on a disk. It is recorded as either a space or a mark. Two Channel bits are used to represent one user bit.

**4.4 clamping zone:** The annular part of the disk within which the clamping force is applied by the clamping device.

**4.5 control track:** A track containing the information on media parameters and format necessary for writing, reading and erasing the remaining tracks on the optical disk.

**4.6 Cyclic Redundancy Check (CRC):** A method for detecting errors in data.

**4.7 defect management:** A method for handling the defective areas on the disk.

**4.8 disk reference plane:** A plane defined by the perfectly flat annular surface of an ideal spindle onto which the clamping zone of the disk is clamped, and which is normal to the axis of rotation.

**4.9 embossed mark:** A mark so formed as to be unalterable by magneto-optical means.

**4.10 entrance surface:** The surface of the disk on to which the optical beam first impinges.

**4.11 Error Correction Code (ECC):** An error-detecting code designed to correct certain kinds of errors in data.

**4.12 field:** A subdivision of a sector.

**4.13 format:** The arrangement or layout of information on the disk.

**4.14 fully embossed disk:** An optical disk in which all data fields in the Data Zone are embossed.

**4.15 fully rewritable disk:** An optical disk in which the data in specified areas can be rewritten by an optical beam.

**4.16 groove:** See 4.20.

**4.17 hub:** The central feature on the disk which interacts with the spindle of the disk drive to provide radial centering and the clamping force.

**4.18 interleaving:** The process of allocating the physical sequence of units of data so as to render the data more immune to burst errors.



Copyright International Organization for Standardization
Provided by IHS under license with ISO
No reproduction or networking permitted without license from IHS Not for Resale

**4.19 Kerr rotation:** The rotation of the plane of polarization of an optical beam upon reflection from the recording layer, as caused by the magneto-optical effect.

**4.20 land and groove:** A trench-like feature of the disk, applied before the recording of any information, and used to define the track location. The groove is located nearer to the entrance surface than the land with which it is paired to form a track.

**4.21 logical track:** A contiguous length of 25 sectors that may be less than one complete revolution of the disk. The first sector of each logical track is assigned sector number 0.

**4.22 mark:** A feature of the recording layer which may take the form of a magnetic domain, a pit, or any other type or form that can be sensed by the optical system. The pattern of marks represents the data on the disk.

Note - Subdivisions of a sector which are named 'mark' are not marks in the sense of this definition.

**4.23 optical disk:** A disk that will accept and retain information in the form of marks in a recording layer, that can be read with an optical beam.

**4.24 optical disk cartridge (ODC):** A device consisting of a case containing an optical disk.

**4.25 partially embossed disk:** An optical disk which contains both rewritable and embossed data fields in the Data Zone.

**4.26 physical track:** The path which is followed by the focus of the optical beam during one revolution of the disk.

**4.27 physical track group:** A fixed number of consecutive physical tracks in the Data Zone.

**4.28 pitch:** The distance between adjacent physical track centrelines, measured in a radial direction.

**4.29 polarization:** The direction of polarization of an optical beam is the direction of the electric vector of the beam.

Note - The plane of polarization is the plane containing the electric vector and the direction of propagation of the beam. The polarization is right-handed when to an observer looking in the direction of propagation of the beam, the end-point of the electric vector would appear to describe an ellipse in the clockwise sense.

**4.30 read power:** The optical power, incident at the entrance surface of the disk, used when reading.

Note - It is specified as a maximum power that may be used without damage to the written data. Lower power may be used provided that the signal-to-noise ratio and other requirements of this International Standard are met.

**4.31 recording layer:** A layer of the disk on, or in, which data is written during manufacture and/or use.

**4.32 Reed-Solomon code:** An error detection and/or correction code which is particularly suited to the correction of errors which occur in bursts or are strongly correlated.

**4.33 sector:** The smallest addressable part of a track in the Information Zone of a disk that can be accessed independently of other addressable parts of the zone.

**4.34 spindle:** The part of the disk drive which contacts the disk and/or hub.

**4.35 substrate:** A transparent layer of the disk, provided for mechanical support of the recording layer, through which the optical beam accesses the recording layer.

**4.36 ZCAV:** A disk format requiring Zoned Constant Angular Velocity operation and with tracks in the Data Zone all being logical tracks.

**4.37 zone:** An annular area of the disk.

## 5 Conventions and notations

### 5.1 Representation of numbers

A measured value is rounded off to the least significant digit of the corresponding specified value. It implies that a specified value of 1,26 with a positive tolerance of +0,01, and a negative tolerance of -0,02 allows a range of measured values from 1,235 to 1,275.

– Letters and digits in parentheses represent numbers in hexadecimal notation.



Copyright International Organization for Standardization
Provided by IHS under license with ISO
No reproduction or networking permitted without license from IHS Not for Resale

- The setting of a bit is denoted by ZERO or ONE.
- Numbers in binary notation and bit combinations are represented by strings of ZEROs and ONEs.
- Numbers in binary notation and bit combinations are shown with the most significant bit to the left.
- Negative values of numbers in binary notation are given in TWO's complement.
- In each field the data is recorded so that the most significant byte (byte 0) is recorded first. Within each byte the least significant bit is numbered 0 and is recorded last, the most significant bit (numbered 7 in an 8-bit byte) is recorded first. This order of recording applies also to the data input of the Error Detection and Correction circuits and to their output.
- Unless otherwise stated, all track numbers refer to logical tracks.

### 5.2 Names

The names of entities, e.g. specific tracks, fields, etc., are given with a capital initial.

## 6 List of acronyms

| | |
|---|---|
| AM | Address Mark |
| CRC | Cyclic Redundancy Check |
| DC | Direct Current (d.c.) |
| DDS | Disk Definition Structure |
| DMA | Defect Management Area |
| ECC | Error Correction Code |
| FA1 | Functional Area 1 |
| FA2 | Functional Area 2 |
| GRP | Group Partitioning |
| ID | Identifier |
| LSB | Least Significant Byte |
| MSB | Most Significant Byte |
| MO | Magneto-Optical |
| ODC | Optical Disk Cartridge |
| ODF | Offset Detection Flag |
| O-ROM | Optical Read Only Memory |
| PA | Postamble |
| PDL | Primary Defect List |
| P-ROM | Partial Read Only Memory |
| RLL(2,7) | Run Length Limited (code) |
| R/W | Rewritable |
| SDL | Secondary Defect List |
| SM | Sector Mark |
| VFO | Variable Frequency Oscillator |
| ZCAV | Zoned Constant Angular Velocity |

## 7 General description of the optical disk cartridge

The optical disk cartridge which is the subject of this International Standard consists of a case containing an optical disk.

The case is a protective enclosure for the disk. It has access windows covered by a shutter. The windows are automatically uncovered by the drive when the cartridge is inserted into it.

The optical disk is recordable on one side. Data can be written onto the disk as marks in the form of magnetic domains in the recording layer and can be erased from it with a focussed optical beam, using the thermo-magnetic effect. The data can be read with a focussed optical beam, using the magneto-optical effect. The beam accesses the recording layer through the transparent substrate of the disk.

Part of the disk or the entire disk may contain read-only data in the form of pits embossed by the manufacturer. This data can be read using the diffraction of the optical beam by the embossed pits.

Copyright International Organization for Standardization
Provided by IHS under license with ISO
No reproduction or networking permitted without license from IHS Not for Resale

# 8 General requirements

## 8.1 Environments

### 8.1.1 Testing environment

The test environment is the environment where the air immediately surrounding the optical disk cartridge has the following properties:

| | |
|---|---|
| temperature | : 23 °C ± 2 °C |
| relative humidity | : 45 % to 55 % |
| atmospheric pressure | : 60 kPa to 106 kPa |
| air cleanliness | : Class 100 000 (see annex M) |

No condensation on or in the optical disk cartridge shall occur. Before testing, the optical disk cartridge shall be conditioned in this environment for 48 h minimum. It is recommended that, before testing, the entrance surface of the optical disk shall be cleaned according to the instructions of the manufacturer of the disk.

Unless otherwise stated, all tests and measurements shall be made in this test environment.

### 8.1.2 Operating environment

This International Standard requires that an optical disk cartridge which meets all requirements of this International Standard in the specified test environment provides data interchange over the specified ranges of environmental parameters in the operating environment.

The operating environment is the environment where the air immediately surrounding the optical disk cartridge has the following properties:

| | |
|---|---|
| temperature | : 5 °C to 55 °C |
| relative humidity | : 3 % to 85 % |
| absolute humidity | : 1 g/m$^3$ to 30 g/m$^3$ |
| atmospheric pressure | : 60 kPa to 106 kPa |
| temperature gradient | : 10 °C/h max. |
| relative humidity gradient | : 10 %/h max. |
| air cleanliness | : Office environment (see annex Q) |
| magnetic field strength at the recording layer for any condition under which a beam is in focus | : 32 000 A/m max. |
| magnetic field strength at the recording layer during any other condition | : 48 000 A/m max. |

No condensation on or in the optical disk cartridge shall occur. If an optical disk cartridge has been exposed to conditions outside those specified in this clause, it shall be acclimatized in an allowed operating environment for at least 2 h before use. (See also annex L)

### 8.1.3 Storage environment

The optical disk cartridge without any protective enclosure shall not be stored in an environment outside the range allowed for storage. The storage environment is defined as an environment where the air immediately surrounding the optical disk cartridge has the following properties:

| | |
|---|---|
| temperature | : -10 °C to 55 °C |
| relative humidity | : 3 % to 90 % |
| absolute humidity | : 1 g/m$^3$ to 30 g/m$^3$ |
| atmospheric pressure | : 60 kPa to 106 kPa |
| temperature gradient | : 15 °C/h max. |
| relative humidity gradient | : 10 %/h max. |
| air cleanliness | : Office environment (see annex Q) |
| magnetic field strength at the recording layer | : 48 000 A/m max. |

No condensation on or in the optical disk cartridge shall occur.

### 8.1.4 Transportation

This International Standard does not specify requirements for transportation; guidance is given in annex P.



Copyright International Organization for Standardization
Provided by IHS under license with ISO
No reproduction or networking permitted without license from IHS Not for Resale

### 8.2 Temperature shock

The optical disk cartridge shall withstand a temperature shock of up to 20 °C when inserted into, or removed from, the drive.

### 8.3 Safety requirements

The cartridge shall satisfy the safety requirements of IEC 950, when used in the intended manner or in any foreseeable use in an information processing system.

### 8.4 Flammability

The cartridge and its components shall be made from materials that comply with the flammability class for HB materials, or better, as specified in IEC 950.

## 9 Reference Drive

The Reference Drive is a drive several critical components of which have well defined properties and which is used to test write, read and erase parameters of the disk for conformance to this International Standard. The critical components vary from test to test. This clause gives an outline of all components; components critical for tests in specific clauses only are specified in these clauses.

### 9.1 Optical system

The basic set-up of the optical system of the Reference Drive used for measuring the write, read and erase parameters is shown in figure 1. Different components and locations of components are permitted, provided that the performance remains the same as that of the set-up in figure 1. The optical system shall be such that the detected light reflected from the entrance surface of the disk is minimized so as not to influence the accuracy of the measurements.

In the absence of polarization changes in the disk, the polarizing beam splitter J shall be aligned to make the signal of detector $K_1$ equal to that of detector $K_2$ The direction of polarization in this case is called the neutral direction. The phase retarder I shall be adjusted such that the optical system does not have more than 2,5° phase retardation between the neutral polarization and the polarization perpendicular to it. This position of the retarder is called the neutral position.



Copyright International Organization for Standardization
Provided by IHS under license with ISO
No reproduction or networking permitted without license from IHS
Not for Resale

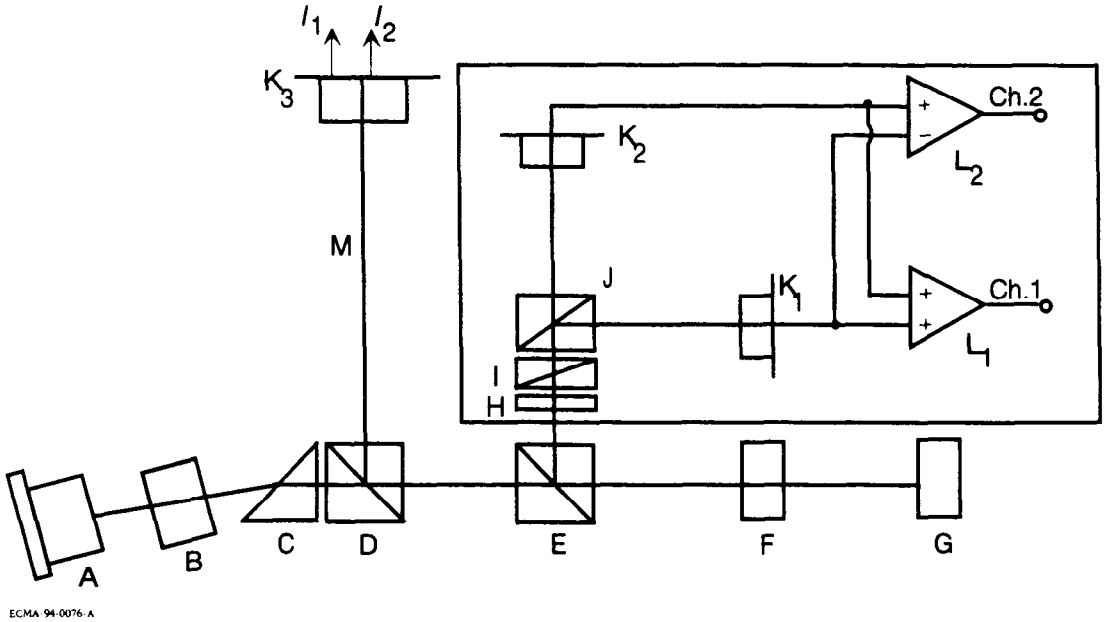


| | | | |
|---|---|---|---|
| A | Laser diode | G | Optical disk |
| B | Collimator lens | H | Optional half-wave plate |
| C | Optional shaping prism | I | Phase retarder |
| Ch.1 | Channel 1 | $I_1, I_2$ | Signals from split photodiode (see 20.3) |
| Ch.2 | Channel 2 | J | Polarizing beam splitter |
| D | Beam splitter | $K_1, K_2$ | Photodiodes for channels 1 and 2 |
| E | Polarizing beam splitter | $K_3$ | Split photodiode |
| F | Objective lens | $L_1, L_2$ | d.c.-coupled amplifiers |
| | | M | Tracking channel (see 20.3) |

**Figure 1 - Optical system of the Reference Drive**

The phase retarder can be used for the measurement of the narrow-band signal-to-noise ratio (see 26.2).

The beam splitter J shall have a p-s intensity reflectance ratio of at least 100.

The beam splitter E shall have an intensity reflectance $R_p$ from F to H of nominally 0,30 for the neutral polarization direction. The reflectance $R_s$ for the polarization perpendicular to the neutral direction shall be nominally 0,95. The actual value of $R_s$ shall not be smaller than 0,90.

The imbalance of the magneto-optical signal is specified for a beam splitter with nominal reflectances. If the measurement is made on a drive with reflectances $R_p'$ and $R_s'$ for beam splitter E, then the measured imbalance shall be multiplied by

$$\sqrt{\frac{R_s R'_p}{R_p R'_s}}$$

to make it correspond to the nominal beam splitter E.

The output of Channel 1 is the sum of the currents through photodiodes $K_1$ and $K_2$ and is used for reading embossed marks. The output of Channel 2 is the difference between photodiode currents, and is used for reading user-written marks with the magneto-optical effect.

## 9.2 Optical beam

The focussed optical beam used for writing, reading and erasing data shall have the following properties:

a) Wavelength ($\lambda$) 780 nm $^{+15\ nm}_{-10\ nm}$



Copyright International Organization for Standardization
Provided by IHS under license with ISO
No reproduction or networking permitted without license from IHS Not for Resale

| | |
|---|---|
| b) Wavelength ($\lambda$) divided by the numerical aperture of the objective lens (NA) | $\lambda$/ NA = 1,42 μm ± 0,03 μm |
| c) Filling D/W of the aperture of the objective lens | 1,0 max. |
| d) Variance of the wavefront of the optical beam | $\lambda^2$/ 180 max. near the recording layer |
| e) Polarization | Linear, parallel or perpendicular to the groove where appropriate |
| f) Extinction ratio | 0,01 max. |
| g) Read power | see 20.2.2, 24.2.2 and 28.2.2 |
| Write power and pulse width | see 24.3.2 |
| Erase power | see 24.4.1 |

D is the diameter of the lens aperture and W is the beam diameter of the Gaussian beam where the intensity is $1/e^2$ of the maximum intensity.

The extinction ratio is the ratio of the minimum over the maximum power observed behind a linear polarizer in the optical beam, which is rotated over at least 180°.

## 9.3 Read channels

Two read channels shall be provided to generate signals from the marks in the recording layer. Channel 1 shall be used for reading the embossed marks, using the diffraction of the optical beam by the marks. Channel 2 shall be used for reading the user-written marks, using the rotation of the polarization of the optical beam due to the magneto-optical effect of the marks. The read amplifiers after the photo-detectors in Channel 1 and Channel 2 shall have a flat response within ±1 dB from d.c. to 22,3 MHz and from 100 kHz to 22,3 MHz.

## 9.4 Tracking

The Tracking channel of the drive provides the tracking error signals to control the servos for the axial and radial tracking of the optical beam. The method of generating the axial tracking error is not specified for the Reference Drive. The radial tracking error is generated by a split photodiode detector in the tracking channel. The division of the diode runs parallel to the image of the tracks on the diode.

The requirements for the accuracy with which the focus of the optical beam must follow the tracks is specified in 20.2.4.

## 9.5 Rotation of the disk

The spindle shall position the disk as specified in 12.4. It shall rotate the disk at 30,0 Hz ± 0,3 Hz. The direction of rotation shall be counter-clockwise when viewed from the objective lens.



Copyright International Organization for Standardization
Provided by IHS under license with ISO
No reproduction or networking permitted without license from IHS
Not for Resale

# Section 2 : Mechanical and physical characteristics

## 10 Dimensional and physical characteristics of the case

### 10.1 General description of the case (see figure 2)

The case is a rigid protective container of rectangular shape. It has a spindle window on Side A to allow the spindle of the drive to clamp the disk by its hub. Both Side A and Side B of the case have a head window, the one on Side A for the optical head of the drive, the other one on Side B for the magnetic head providing the necessary magnetic fields. A shutter uncovers the windows upon insertion into the drive, and automatically covers them upon removal from the drive. The case has features that enable a drive to reject a mis-inserted cartridge, write-inhibit and reflectance detection features, and gripper slots for an autochanger.

### 10.2 Reference planes of the case

The dimensions of the case shall be referred to three orthogonal reference planes X, Y and Z. The case shall be constrained such that four reference surfaces S1 to S4 on Side A of the case lie in plane Z when measuring those dimensions of the case in 10.3 which are referenced to this plane. The intersection of the three planes defines the centre of the location hole. The centre of the alignment hole shall lie in the X plane (see annex N). A dimension of a feature referenced to one of the planes is the shortest distance from the feature to the plane.

### 10.3 Dimensions of the case

The dimensions of the case shall be measured in the test environment. The dimensions of the case in an operating environment can be estimated from the dimensions specified in this clause.

#### 10.3.1 Overall dimensions (see figure 3)

The total length of the case shall be

$$L_1 = 94{,}0 \text{ mm} \pm 0{,}3 \text{ mm}$$

The distance from the top of the case to reference plane X shall be

$$L_2 = 76{,}0 \text{ mm} \pm 0{,}2 \text{ mm}$$

The distance from the bottom of the case to reference plane X shall be

$$L_3 = 18{,}0 \text{ mm} \pm 0{,}2 \text{ mm}$$

The total width of the case shall be

$$L_4 = 90{,}0 \text{ mm} \begin{matrix} +\,0{,}0 \text{ mm} \\ -\,0{,}4 \text{ mm} \end{matrix}$$

The distance from the left hand side of the case to reference plane Y shall be

$$L_5 = 85{,}0 \text{ mm} \pm 0{,}3 \text{ mm}$$

The distance from the right hand side of the case to reference plane Y shall be

$$L_6 = 5{,}0 \text{ mm} \pm 0{,}1 \text{ mm}$$

The corner at the top shall be rounded with a radius

$$R_1 = 1{,}5 \text{ mm} \pm 0{,}2 \text{ mm}$$

and the two corners at the bottom with a radius

$$R_2 = 2{,}0 \text{ mm} \pm 0{,}2 \text{ mm}$$

In the zones extending

$$L_7 = 8{,}6 \text{ mm min.}$$

from the left-hand and right-hand edges of the case, the thickness of the case shall be

Copyright International Organization for Standardization
Provided by IHS under license with ISO
No reproduction or networking permitted without license from IHS
Not for Resale

$L_8$ = 6,0 mm ± 0,2 mm

The eight long edges of the case shall be rounded with a radius

$$R_3 = 0{,}3 \text{ mm} \begin{matrix} +0{,}2 \text{ mm} \\ -0{,}0 \text{ mm} \end{matrix}$$

**10.3.2 Location hole (see figure 3)**

The centre of the location hole shall coincide with the intersection of the planes X, Y and Z. The diameter of the hole shall be

$$D_1 = 3{,}60 \text{ mm} \begin{matrix} +0{,}00 \text{ mm} \\ -0{,}06 \text{ mm} \end{matrix}$$

held to a depth

$L_9$ = 1,5 mm min.

The location hole shall extend below plane Z by

$L_{10}$ = 4,0 mm min.

with a diameter equal to, or greater than $D_1$.

The location hole shall not extend through Side B.

The lead-in edges shall be rounded with a radius

$R_4$ = 0,5 mm max.

**10.3.3 Alignment hole (see figure 3)**

The centre of the alignment hole shall lie in the X plane at a distance

$L_{11}$ = 80,0 mm ± 0,2 mm

from reference plane Y.

The alignment hole shall have a substantially rectangular shape. Its dimensions shall be

$$L_{12} = 3{,}60 \text{ mm} \begin{matrix} +0{,}00 \text{ mm} \\ -0{,}06 \text{ mm} \end{matrix}$$

$$L_{13} = 4{,}4 \text{ mm} \begin{matrix} +0{,}2 \text{ mm} \\ -0{,}0 \text{ mm} \end{matrix}$$

held to a depth $L_9$, below which the alignment hole shall extend to $L_{10}$, with dimensions equal to, or greater than, $L_{12}$ and $L_{13}$, respectively.

The alignment hole shall not extend through Side B.

The lead-in edges shall be rounded with radius $R_4$.

**10.3.4 Reference surfaces (see figure 4)**

Side A of the case shall contain four reference surfaces S1, S2, S3 and S4.

Surfaces S1 and S2 shall be circular with a diameter

$D_2$ = 7,0 mm min.

S1 shall be centred on the location hole, and S2 shall be centred on the alignment hole.

Surfaces S3 and S4 shall be circular with a diameter

$D_3$ = 6,0 mm min.

Copyright International Organization for Standardization
Provided by IHS under license with ISO
No reproduction or networking permitted without license from IHS Not for Resale

with their centres located at

$L_{14}$ = 54,0 mm ± 0,2 mm

$L_{15}$ = 1,0 mm ± 0,2 mm and

$L_{16}$ = 81,0 mm ± 0,2 mm

No portion of the case or of the shutter mechanism (see 10.3.8) shall protrude more than

$L_{17}$ = 0,15 mm max.

beyond plane Z.

**10.3.5 Detents (see figure 5)**

The case shall have two symmetrical detents intended for autoloading. Each detent shall extend from plane Z up to

$L_{18}$ = 5,0 mm min.

and shall not extend through Side B.

Each detent is defined by a semi-circular section with a radius

$R_5$ = 2,1 mm ± 0,1 mm

which stretches out to the side of the case along two straight lines extending from the semi-circle. The radii of the two detents originate from

$L_{19}$ = 65,5 mm ± 0,2 mm

$L_{20}$ = 4,0 mm max.

$L_{21}$ = 84,0 mm max.

The outside edges of the detents shall be rounded off by a radius

$R_6$ = 0,5 mm ± 0,2 mm

**10.3.6 Functional Areas (see figure 6)**

The case shall have an opening in Side A the length of which shall be

$L_{22}$ = 8,2 mm min.

Its width shall be at least equal to $L_{23}$, and its centreline shall be located on the intersection of planes Y and Z.

Functional Area FA1 shall have the dimensions

$L_{23}$ = 4,4 mm min.

$L_{24}$ = 3,6 mm min.

Its centreline shall be in plane Z, and parallel to plane X at a distance

$L_{25}$ = 7,8 mm ± 0,2 mm

from plane X. Side B shall have an opening corresponding to the surface of Functional Area FA1.

Functional Area FA2 shall have the dimensions $L_{23}$, $L_{24}$ and

$L_{26}$ = 4,0 mm min.

Its centreline shall be in plane Z, and parallel to plane X at a distance

$L_{27}$ = 12,8 mm ± 0,2 mm

There shall be no opening in Side B corresponding to Functional Area FA2.

Copyright International Organization for Standardization
Provided by IHS under license with ISO
No reproduction or networking permitted without license from IHS
Not for Resale

The cartridge shall have a device capable of

- either closing FA1 or FA2,
- or closing both FA1 and FA2.

The two Functional Areas shall indicate the reflectance of the disk in the cartridge and whether or not writing on the disk is permitted, as specified in table 1 (see also figure 6).

**Table 1 - Use of the Functional Areas FA1 and FA2**

| FA1 | FA2 | Writing | Reflectance | Type of Cartridge |
|---|---|---|---|---|
| Open | Closed | Inhibited | Low | **R/W , P-ROM or O-ROM** |
| Closed | Open | Permitted | Low | **R/W or P-ROM** |
| Closed | Closed | Inhibited | High | **O-ROM** |
| Open | Open | Not permitted by this International Standard | | |

The surface of the device shall be at a distance

$$L_{28} = 0{,}3 \text{ mm max.}$$

from plane Z.

### 10.3.7 Spindle and head windows (see figure 7)

Side A of the case shall have a window to enable the spindle and the optical head of the drive to access the disk.

The dimensions of the window are referenced to a centreline, located at a distance

$$L_{29} = 40{,}0 \text{ mm} \pm 0{,}2 \text{ mm}$$

from plane Y. The width of the window shall be given by

$$L_{30} = 11{,}0 \text{ mm} \begin{matrix} +0{,}2 \text{ mm} \\ -0{,}0 \text{ mm} \end{matrix}$$

and

$$L_{31} = 11{,}0 \text{ mm} \begin{matrix} +0{,}2 \text{ mm} \\ -0{,}0 \text{ mm} \end{matrix}$$

The top of the window shall be given by radius

$$R_7 = 43{,}7 \text{ mm min.}$$

originating from $L_{29}$ and

$$L_{32} = 27{,}0 \text{ mm} \pm 0{,}2 \text{ mm}$$

The area bounded by $R_7$ and the top of the case shall be recessed from plane Z by

$$L_{33} = 2{,}0 \text{ mm} \begin{matrix} +0{,}2 \text{ mm} \\ -0{,}0 \text{ mm} \end{matrix}$$

over the width of the window.

The bottom of the window shall be the arc of the semi-circle which smoothly joins the sides of the window. The centre of the semi-circle shall be defined by $L_{29}$ and $L_{32}$.

Side B of the case shall have a window to enable the magnetic head of the drive to access the disk. The dimensions of the window are referenced to a centreline, located at a distance $L_{29}$ from plane Y. The width of the window shall be given by $L_{30}$ and $L_{31}$. The window shall extend from

Copyright International Organization for Standardization
Provided by IHS under license with ISO
No reproduction or networking permitted without license from IHS Not for Resale

$L_{34}$ = 40,0 mm max.

to the arc of $R_7$, originating from $L_{29}$ and $L_{32}$.

The area bounded by $R_7$ and the top of the case shall be, over the width of the window, at a distance

$$L_{35} = 4{,}2 \text{ mm} \begin{matrix} +\,0{,}0 \text{ mm} \\ -\,0{,}4 \text{ mm} \end{matrix}$$

from plane Z.

The two inside corners shall be rounded with a radius

$R_8$ = 2,0 mm max.

**10.3.8 Shutter (see figure 8)**

The case shall have a spring-loaded shutter designed to completely cover the spindle and head windows when closed. When open, the shutter shall expose the windows up to at least the minimum size allowed by the following dimensions, given in 10.3.7:

on Side A: from the semi-circle at the bottom of the window up to the top of the case, and from $L_{30}$ to $L_{31}$;

on Side B: from $L_{34}$ up to the top of the case, and from $L_{30}$ to $L_{31}$;

on the top: from plane Z to $L_{33}$, from $L_{30}$ to $L_{31}$, from $L_{35}$ up to Side B, and from $L_{30}$ to $L_{31}$.

The shutter shall be free to slide in a recessed area of the case in such a way as to ensure that the overall thickness of the case and shutter does not exceed $L_8$ by more than $L_{17}$.

The shutter shall have one edge against which the shutter opener of the drive can push to open the shutter. When the shutter is closed, this edge shall be

$$L_{36} = 79{,}0 \text{ mm} \begin{matrix} +\,0{,}0 \text{ mm} \\ -\,0{,}3 \text{ mm} \end{matrix}$$

from plane Y. A movement of the edge to

$L_{37}$ = 55,5 mm min.

shall be sufficient to open the windows to the minimum size specified in 10.3.8. It shall be possible to move the edge to

$L_{38}$ = 54,7 mm max.

without exceeding the shutter opening force as specified in 10.4.5, while leaving the minimum size window open.

**10.3.9 Path for shutter opener and shutter sensor notch (see figure 9)**

The profile on the top of the case provides a path over which the shutter opener of the drive can travel.

The path shall run from

$L_{39}$ = 81,0 mm ± 0,3 mm

to

$$L_{40} = 57{,}5 \text{ mm} \begin{matrix} +\,0{,}3 \text{ mm} \\ -\,0{,}0 \text{ mm} \end{matrix}$$

at a distance

$L_{41}$ = 74,0 mm ± 0,3 mm

from plane X.

The lead-in edge at $L_{39}$ shall be a ramp to the top of the case with an angle

Copyright International Organization for Standardization
Provided by IHS under license with ISO
No reproduction or networking permitted without license from IHS Not for Resale

$A_1 = 45° \pm 5°$

The path shall end in a notch with a width at the bottom from $L_{40}$ to

$L_{42} = 54{,}7$ mm max.

and a depth

$L_{43} = 3{,}3$ mm ± 0,2 mm

below $L_{41}$. The lead-in edge at the right-hand side of the notch shall be rounded with a radius

$R_9 = 1{,}2$ mm ± 0,2 mm

When the shutter edge is moved to $L_{37}$, a length of at least ($L_{40}$ -$L_{37}$) of the notch shall be exposed. This enables a drive to confirm that the shutter is fully open.

### 10.3.10 Mis-insert protections (see figure 10)

The profile on the top of the case shall have two features to prevent the case from being inserted in the drive upside-down.

The first feature is a notch intended to capture and block the shutter opener of the drive if the case is loaded upside-down. It shall have a width from

$L_{44} = 4{,}6$ mm ± 0,2 mm

to

$L_{45} = 1{,}0$ mm ± 0,2 mm

and a depth

$L_{46} = 3{,}1$ mm ± 0,2 mm

below the top of the case.

The right-hand edge of the notch shall be

$L_{47} = 75{,}4$ mm ± 0,2 mm

above plane X.

The corners of this notch shall be rounded off by radii

$R_{10} = 0{,}3$ mm max.

$R_{11} = 0{,}5$ mm ± 0,3 mm

The second feature is a chamfer and a tooth. If the case is correctly loaded, the chamfer pushes aside a possible pawl in the side of the sledge of the drive. If the case is loaded upside-down, the pawl catches the tooth and prevents further insertion of the case. The tooth is formed by the ramp specified in 10.3.10. The chamfer shall have an angle

$A_2 = 45° \pm 2°$

and a height

$L_{48} = 5{,}0$ mm ± 0,3 mm

### 10.3.11 Gripper slots (see figure 11)

The case shall have two symmetrical gripper slots. The slot shall have a depth of

$$L_{49} = 2{,}5 \text{ mm} \begin{matrix} +0{,}3 \text{ mm} \\ -0{,}0 \text{ mm} \end{matrix}$$

from the edge of the case and a width of



Copyright International Organization for Standardization
Provided by IHS under license with ISO
No reproduction or networking permitted without license from IHS Not for Resale

$$L_{50} = 4{,}0 \text{ mm} \begin{matrix} +\,0{,}3 \text{ mm} \\ -\,0{,}0 \text{ mm} \end{matrix}$$

The lower edge of a slot shall be

$$L_{51} = 23{,}0 \text{ mm} \begin{matrix} +\,0{,}0 \text{ mm} \\ -\,0{,}3 \text{ mm} \end{matrix}$$

above the bottom of the case.

The corners of the gripper slots shall be rounded off by radii

$R_{12} = 0{,}4 \text{ mm} \pm 0{,}2 \text{ mm}$

$R_{13} = 0{,}5 \text{ mm} \pm 0{,}2 \text{ mm}$

### 10.3.12 Label area (see figure 12)

The case shall have one connected label area on Side A, the bottom and Side B, with dimensions

$L_{52} = 4{,}0 \text{ mm} \pm 0{,}3 \text{ mm}$

$L_{53} = 76{,}0 \text{ mm} \pm 0{,}3 \text{ mm}$

$L_{54} = 30{,}0 \text{ mm} \pm 0{,}2 \text{ mm}$

and

$L_{55} = 1{,}2 \text{ mm} \pm 0{,}2 \text{ mm}$

The four corners of the area shall be rounded with a radius

$R_{14} = 2{,}0 \text{ mm max.}$

When there is no label, the area shall be recessed by

$L_{56} = 0{,}2 \text{ mm min. on all three sides.}$

## 10.4 Mechanical characteristics

All requirements of this clause shall be met in the operating environment.

### 10.4.1 Material

The case shall be constructed from any suitable materials such that it meets the requirements of this International Standard.

### 10.4.2 Mass

The mass of the case without the optical disk shall not exceed 50 g.

### 10.4.3 Edge distortion

The cartridge shall meet the requirement of the edge distortion test defined in annex A.

### 10.4.4 Compliance

The cartridge shall meet the requirement of the compliance (flexibility) test defined in annex B. The requirement guarantees that a cartridge can be constrained in the proper plane of operation within the drive.

### 10.4.5 Shutter opening force

The spring force on the shutter shall be such that the force required to open the shutter does not exceed 1,5 N.

It shall be sufficiently strong to close a free-sliding shutter, irrespective of the orientation of the case.

Copyright International Organization for Standardization
Provided by IHS under license with ISO
No reproduction or networking permitted without license from IHS
Not for Resale

©ISO/IEC

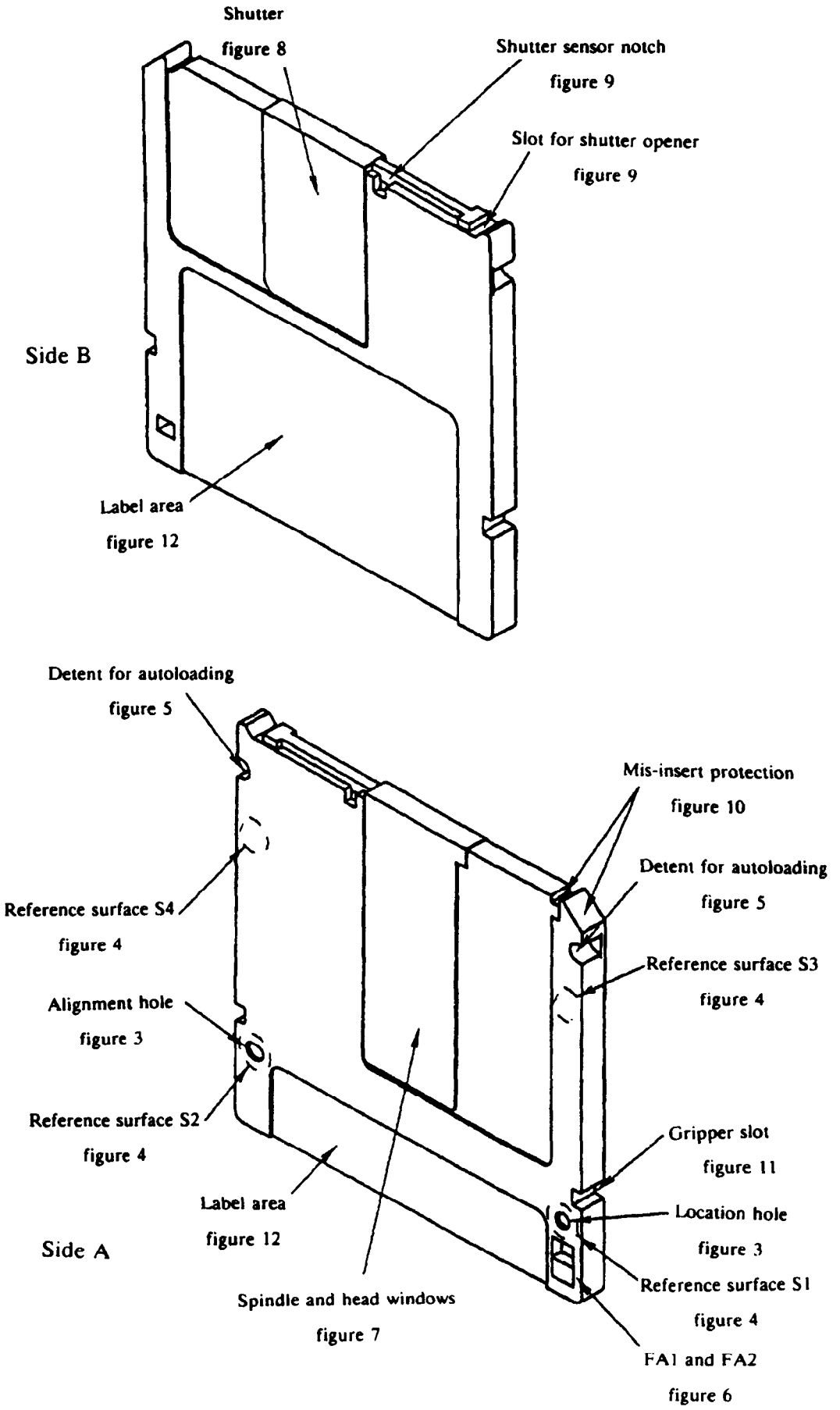


**Figure 2 - General view of the case**



Copyright International Organization for Standardization
Provided by IHS under license with ISO
No reproduction or networking permitted without license from IHS
Not for Resale

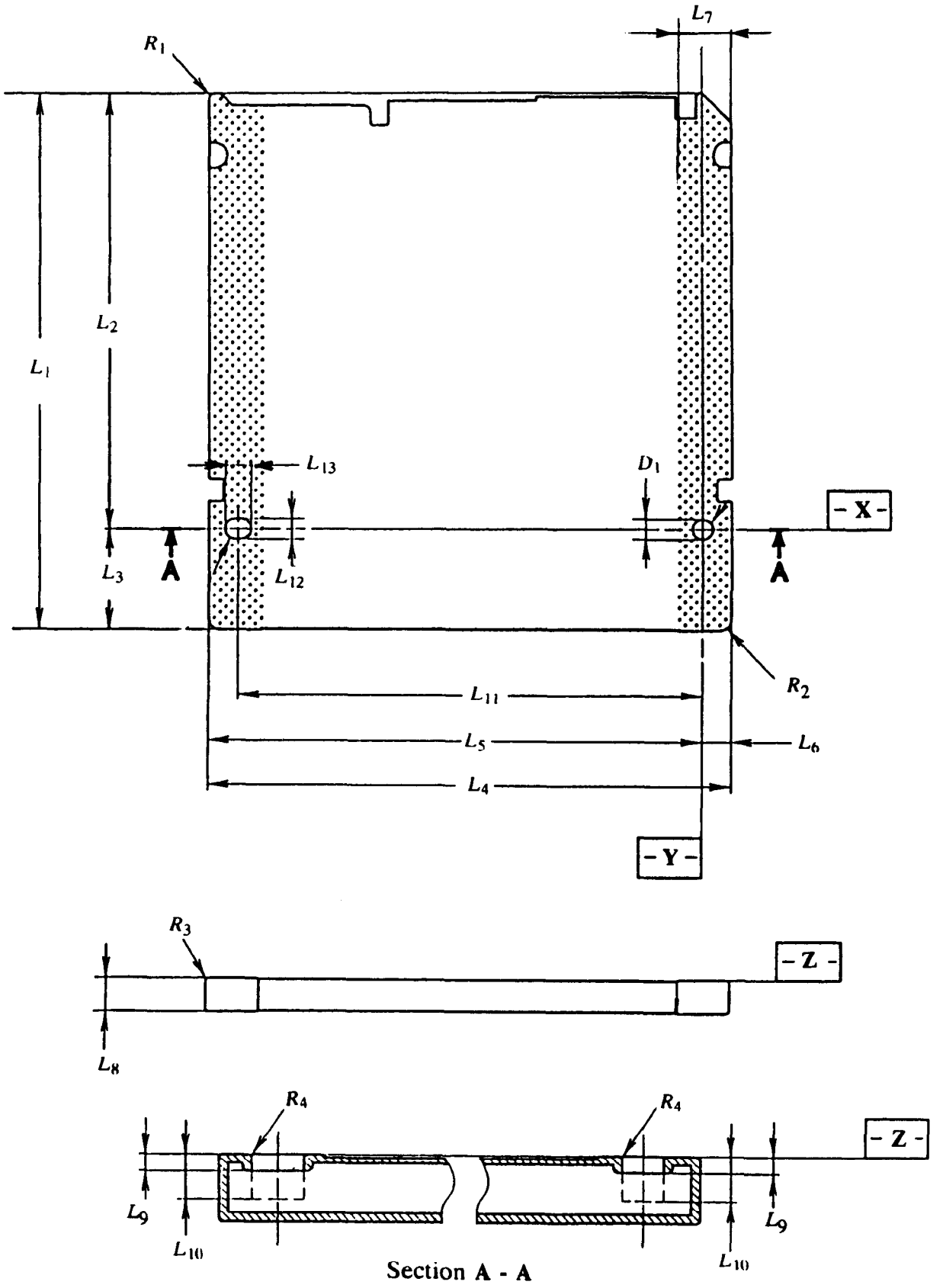


**Figure 3 - Overall dimensions, viewed on Side A**



Copyright International Organization for Standardization
Provided by IHS under license with ISO
No reproduction or networking permitted without license from IHS
Not for Resale

©ISO/IEC

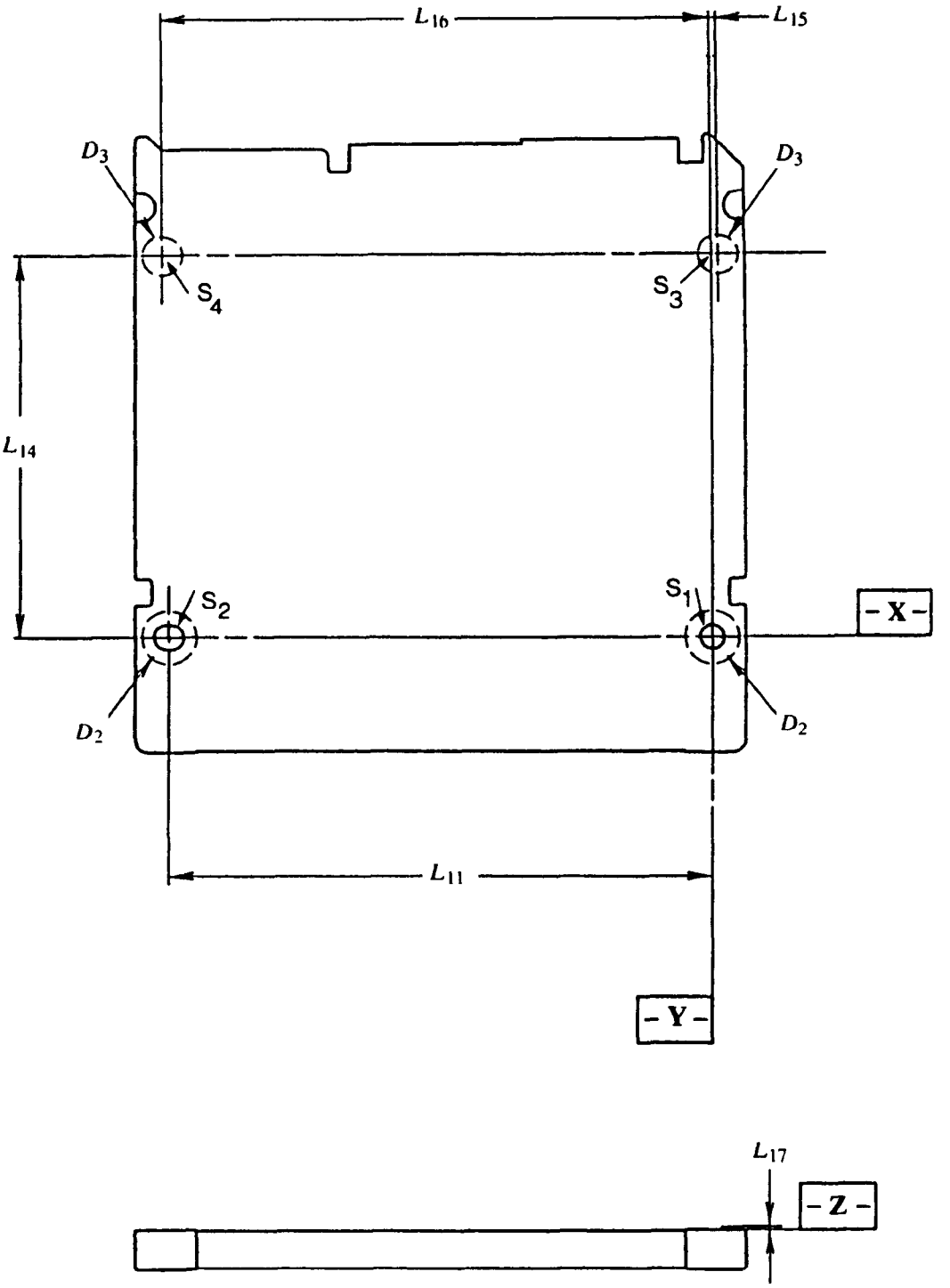


**Figure 4 - Reference surfaces on Side A**



Copyright International Organization for Standardization
Provided by IHS under license with ISO
No reproduction or networking permitted without license from IHS
Not for Resale

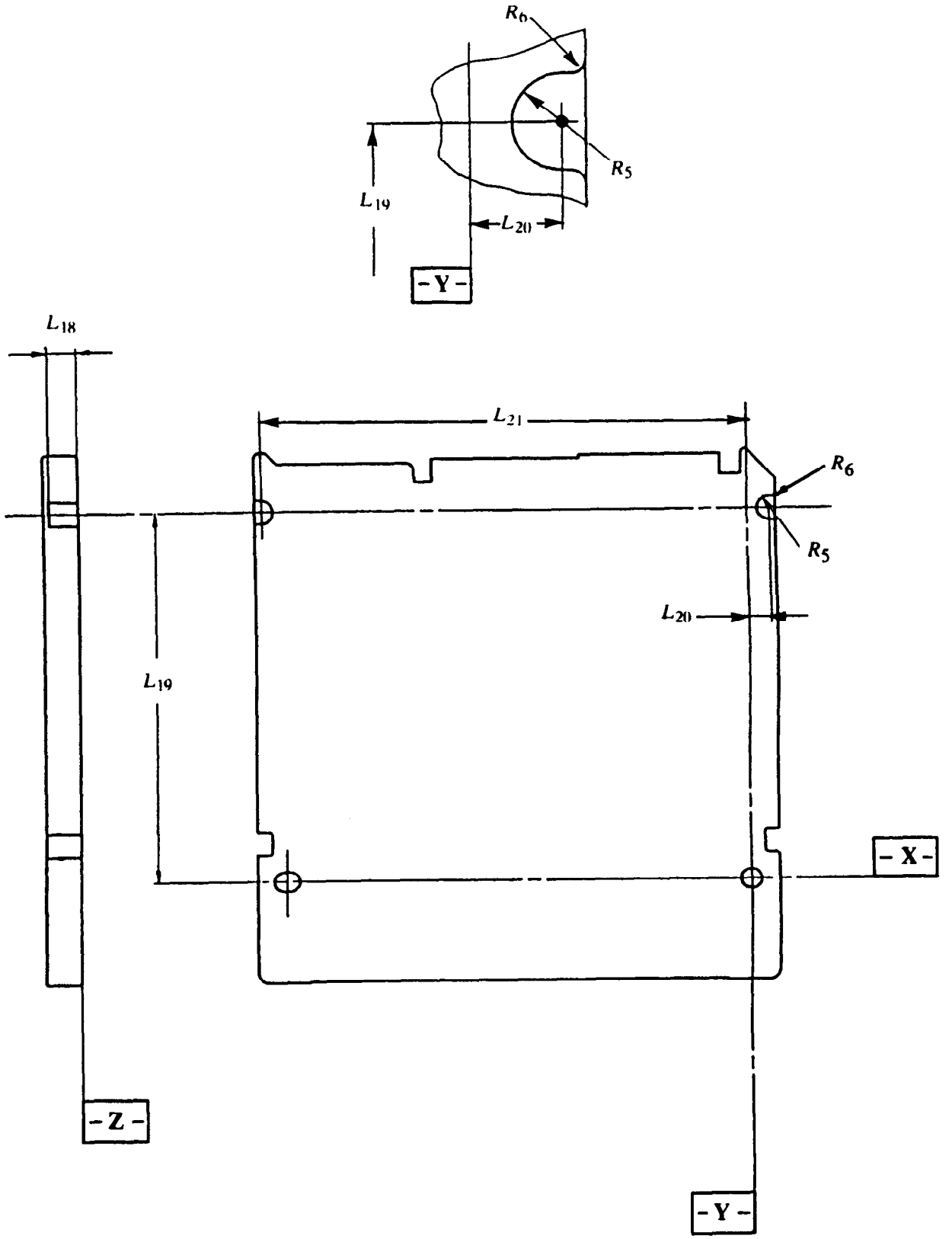


**Figure 5 - Detents, seen on Side A**



Copyright International Organization for Standardization
Provided by IHS under license with ISO
No reproduction or networking permitted without license from IHS
Not for Resale

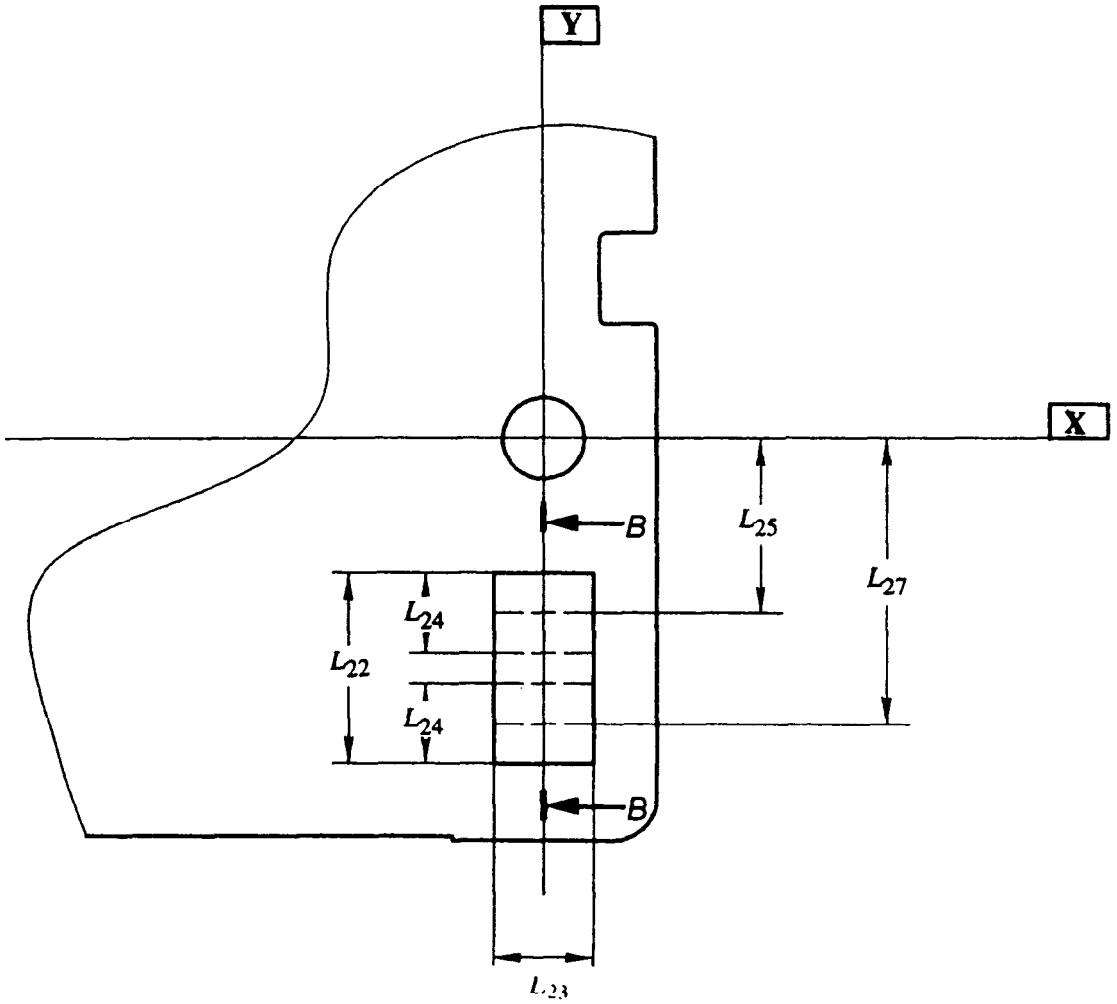


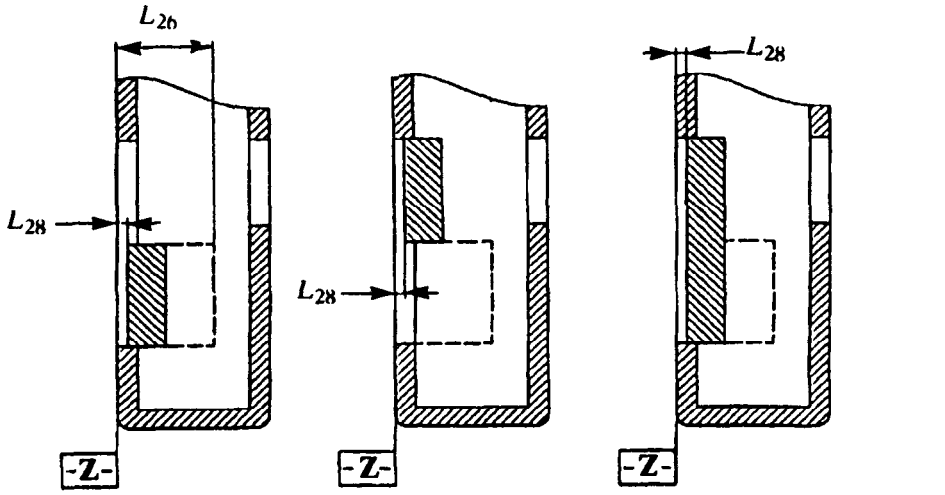


Section B - B
writing inhibited

Section B - B
writing permitted

Section B - B
high reflectance, fully embossed

**Figure 6 - Functional Areas FA1 and FA2, seen on Side A and in cross-section**



Copyright International Organization for Standardization
Provided by IHS under license with ISO
No reproduction or networking permitted without license from IHS
Not for Resale

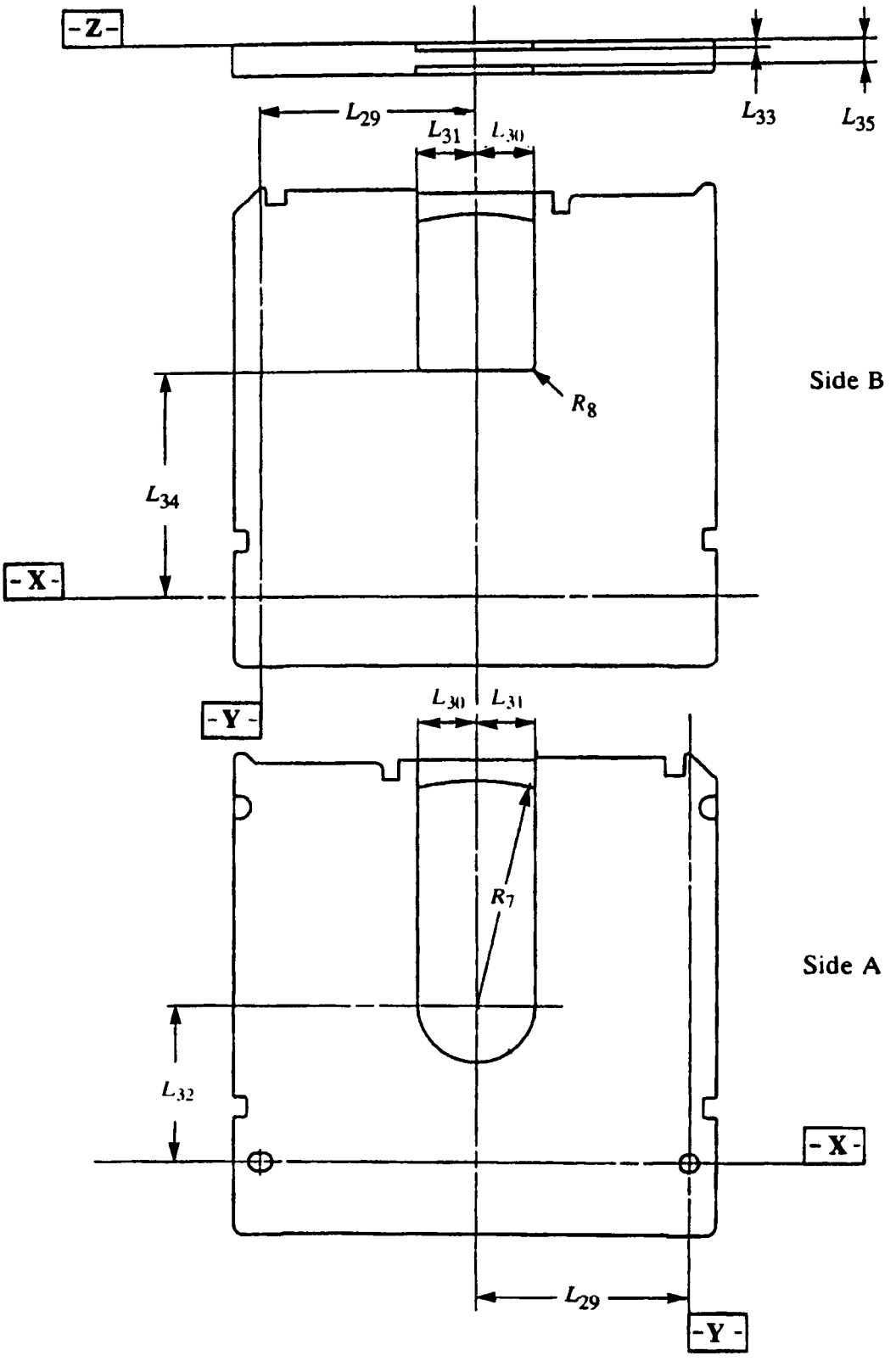


**Figure 7 - Spindle and head windows on Side A (bottom) and B (top) of the case without shutter**

Copyright International Organization for Standardization
Provided by IHS under license with ISO
No reproduction or networking permitted without license from IHS
Not for Resale

©ISO/IEC

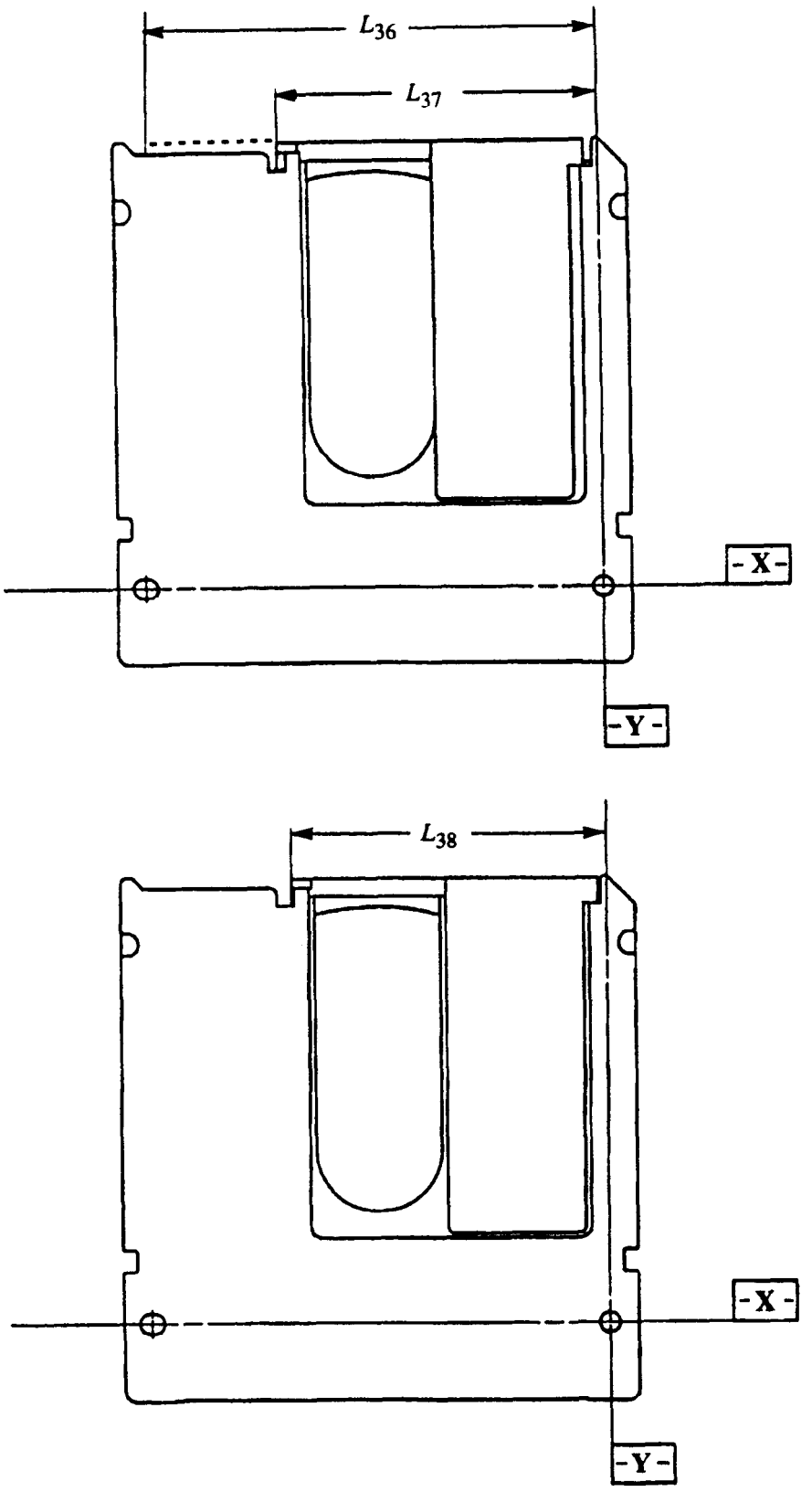


**Figure 8 - Shutter in just open position (top) and maximum open position (bottom). The dashed line indicates the position of the shutter edge when the shutter is closed.**



Copyright International Organization for Standardization
Provided by IHS under license with ISO
No reproduction or networking permitted without license from IHS
Not for Resale

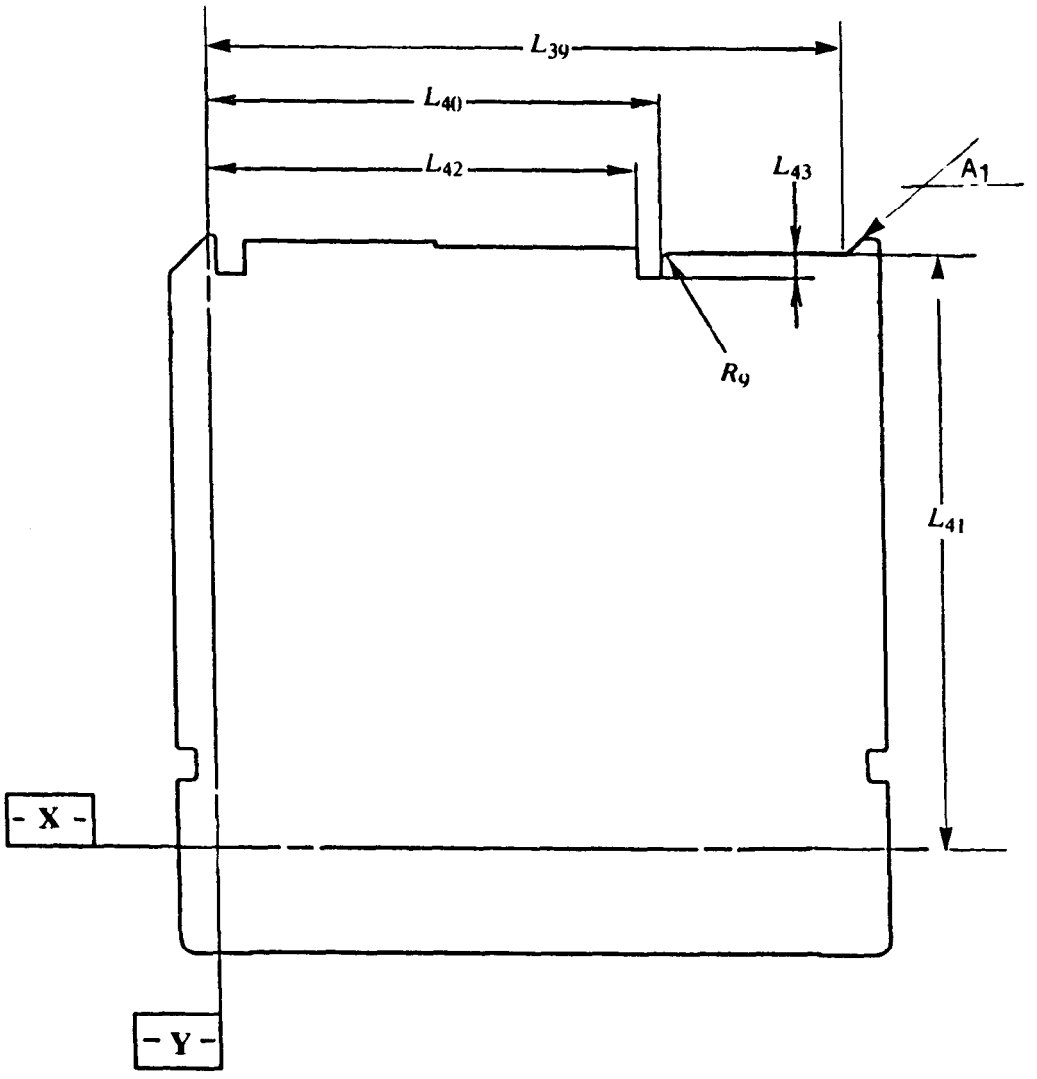


**Figure 9 - Path for the shutter opener, seen from Side B without shutter**



Copyright International Organization for Standardization
Provided by IHS under license with ISO
No reproduction or networking permitted without license from IHS
Not for Resale

©ISO/IEC

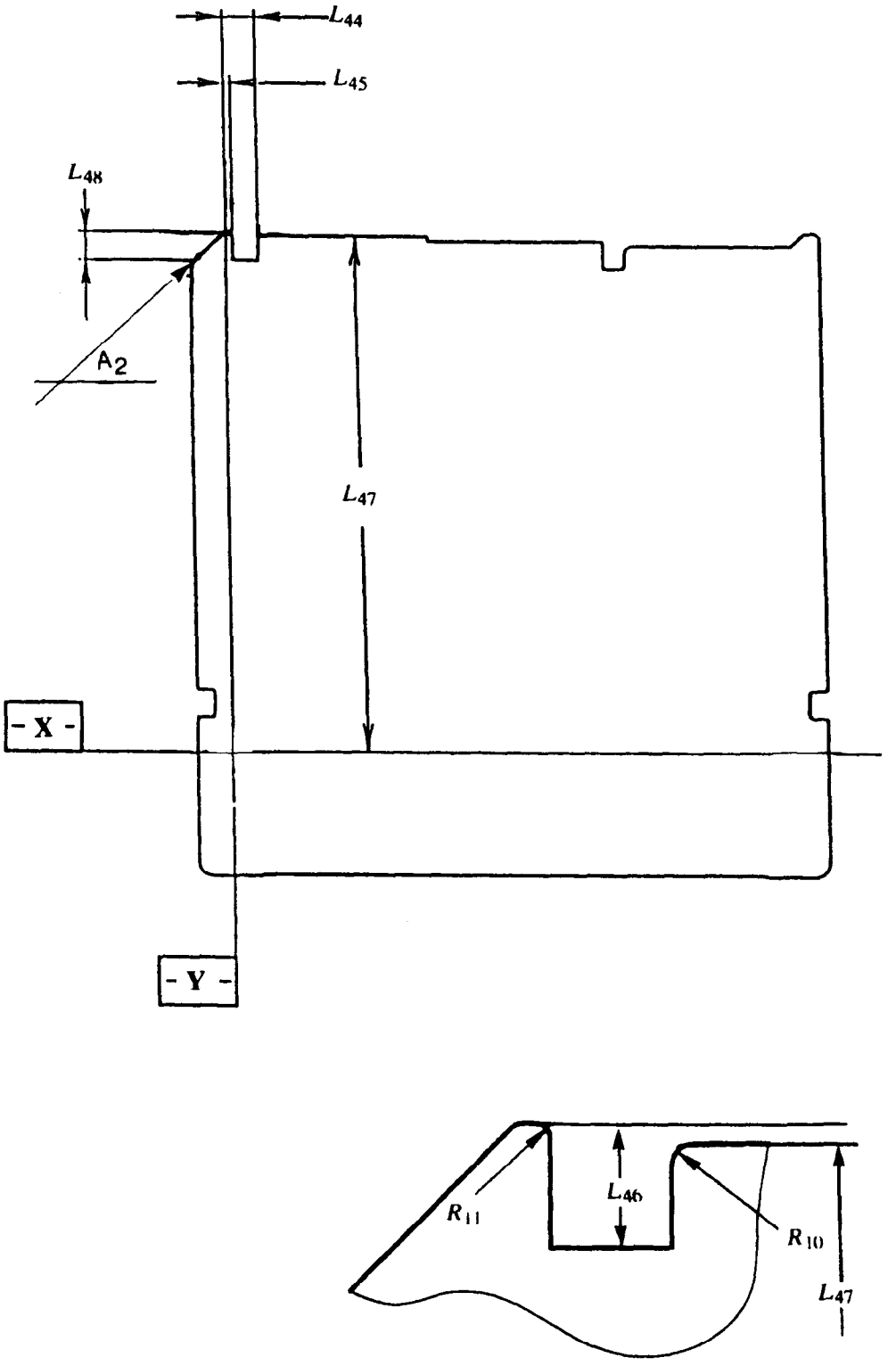


**Figure 10 - Mis-insert protections, seen from Side B of the case without shutter**

Copyright International Organization for Standardization
Provided by IHS under license with ISO
No reproduction or networking permitted without license from IHS
Not for Resale

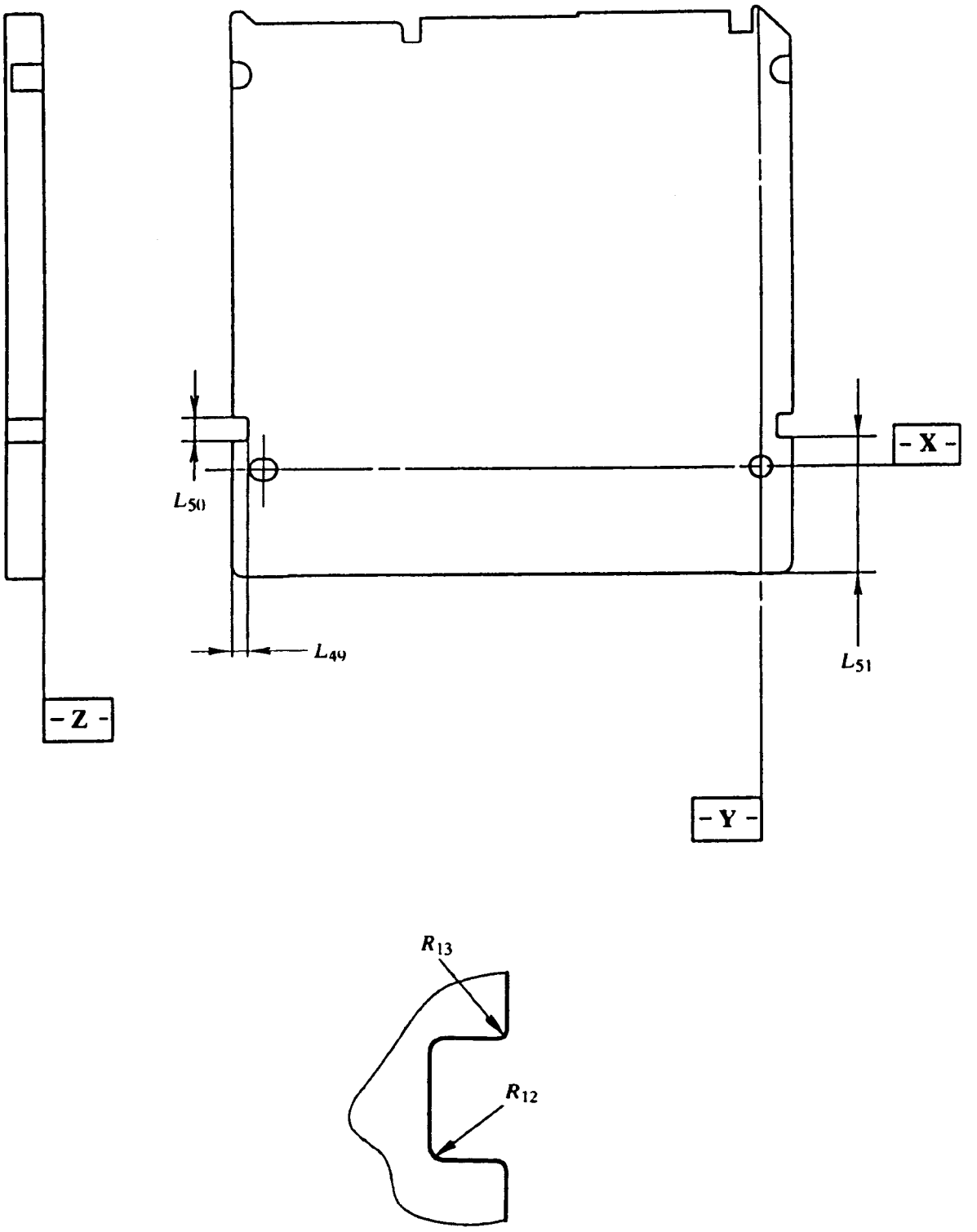


**Figure 11 - Gripper slots seen from Side B of the case without shutter**



Copyright International Organization for Standardization
Provided by IHS under license with ISO
No reproduction or networking permitted without license from IHS
Not for Resale

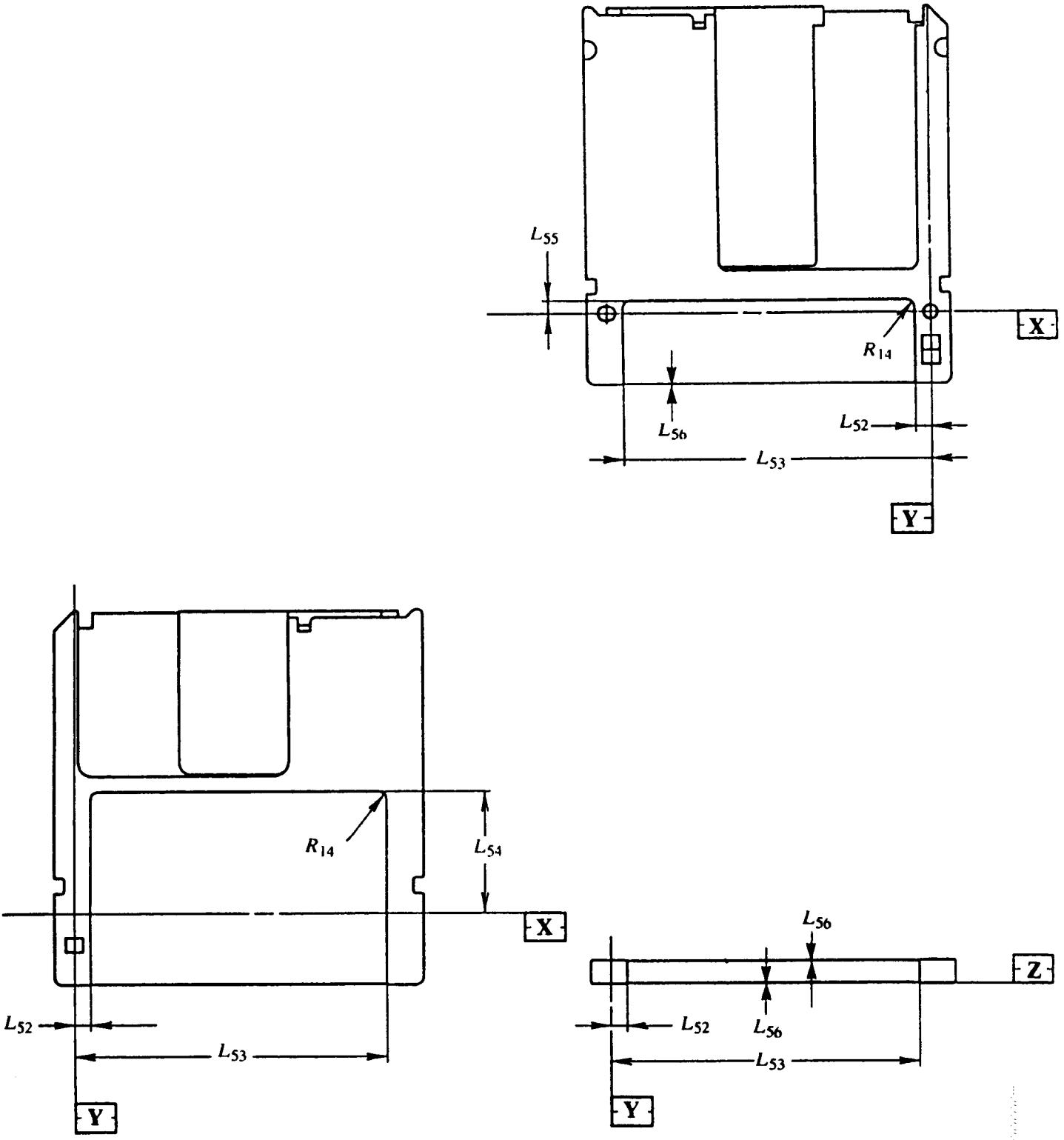


**Figure 12 - Label area**



Copyright International Organization for Standardization
Provided by IHS under license with ISO
No reproduction or networking permitted without license from IHS
Not for Resale

# 11 Dimensional, mechanical and physical characteristics of the disk

## 11.1 General description of the disk

The disk shall consist of a circular substrate with a hub on one side and a recording layer coated on the other side. The recording layer can be protected from environmental influences by a protective layer. The Information Zone of the substrate is transparent to allow an optical beam to focus on the recording layer through the substrate. The circular hub is in the centre of the disk on the side opposite to the recording layer. The hub interacts with the spindle of the drive, and provides the radial centring of the disk and the clamping force.

## 11.2 Reference axis and plane of the disk

Some dimensions of the hub are referred to a disk reference plane P. The disk reference plane P is defined by the perfectly flat annular surface of an ideal spindle onto which the clamping zone of the disk is clamped, and which is normal to the axis of rotation of this spindle. This axis A passes through the centre of the centre hole of the hub, and is normal to plane P.

## 11.3 Dimensions of the disk (see figure 13)

The dimensions of the disk shall be measured in the test environment. The dimensions of the disk in an operating environment can be estimated from the dimensions specified in this clause. The outer diameter of the disk shall be

$$86{,}0 \text{ mm} \begin{matrix} +\,0{,}0 \text{ mm} \\ -\,0{,}5 \text{ mm} \end{matrix}$$

Excluding axial deflection (see 11.4.5), the total thickness of the disk without the hub shall not exceed 1,4 mm.

The diameter of the centre hole of the disk without the hub shall be

$$D_4 = 6{,}0 \text{ mm min.}$$

### 11.3.1 Hub dimensions (see figure 13)

The diameter of the centre hole of the hub shall be

$$D_5 = 4{,}004 \text{ mm} \begin{matrix} +\,0{,}012 \text{ mm} \\ -\,0{,}000 \text{ mm} \end{matrix}$$

The outer diameter of the hub shall be

$$D_6 = 15{,}0 \text{ mm} \begin{matrix} +\,0{,}0 \text{ mm} \\ -\,0{,}2 \text{ mm} \end{matrix}$$

The height of the hub shall be

$$h_1 = 1{,}2 \text{ mm} \begin{matrix} +\,0{,}0 \text{ mm} \\ -\,0{,}2 \text{ mm} \end{matrix}$$

The position of the top of the magnetizable surface shall be

$$h_2 = 1{,}20 \text{ mm} \begin{matrix} +\,0{,}00 \text{ mm} \\ -\,0{,}15 \text{ mm} \end{matrix}$$

The height of the centring hole above reference plane P shall be

$$h_3 = 0{,}8 \text{ mm min.}$$

The centring length at a diameter $D_5$ shall be

$$h_4 = 0{,}15 \text{ mm min.}$$

The lead-in edge of the centre hole shall have chamfer $c_1$ of 45° by 0,2 mm ± 0,1 mm or shall be rounded off by radius

$$R_{15} = 0{,}2 \text{ mm} \pm 0{,}1 \text{ mm}$$



Copyright International Organization for Standardization
Provided by IHS under license with ISO
No reproduction or networking permitted without license from IHS Not for Resale

The outer edge of the centre hole shall have a chamfer $c_2$ of 45° by 0,4 mm ± 0,1 mm or shall be rounded off by radius

$R_{16}$ = 0,4 mm ± 0,1 mm

The hub shall have any suitable magnetizable material for clamping the disk. Its dimensions shall be

$D_9$ = 13,0 mm min.

$D_{10}$ = 6,0 mm max.

and its adsorbent force measured by the test device specified in annex K shall be in the range of 3,0 N to 4,5 N.

**11.3.2 Clamping zone (see figure 13)**

The outer diameter of the clamping zone shall be

$D_7$ = 21,0 mm min.

The inner diameter of the clamping zone shall be

$D_8$ = 16,0 mm max.

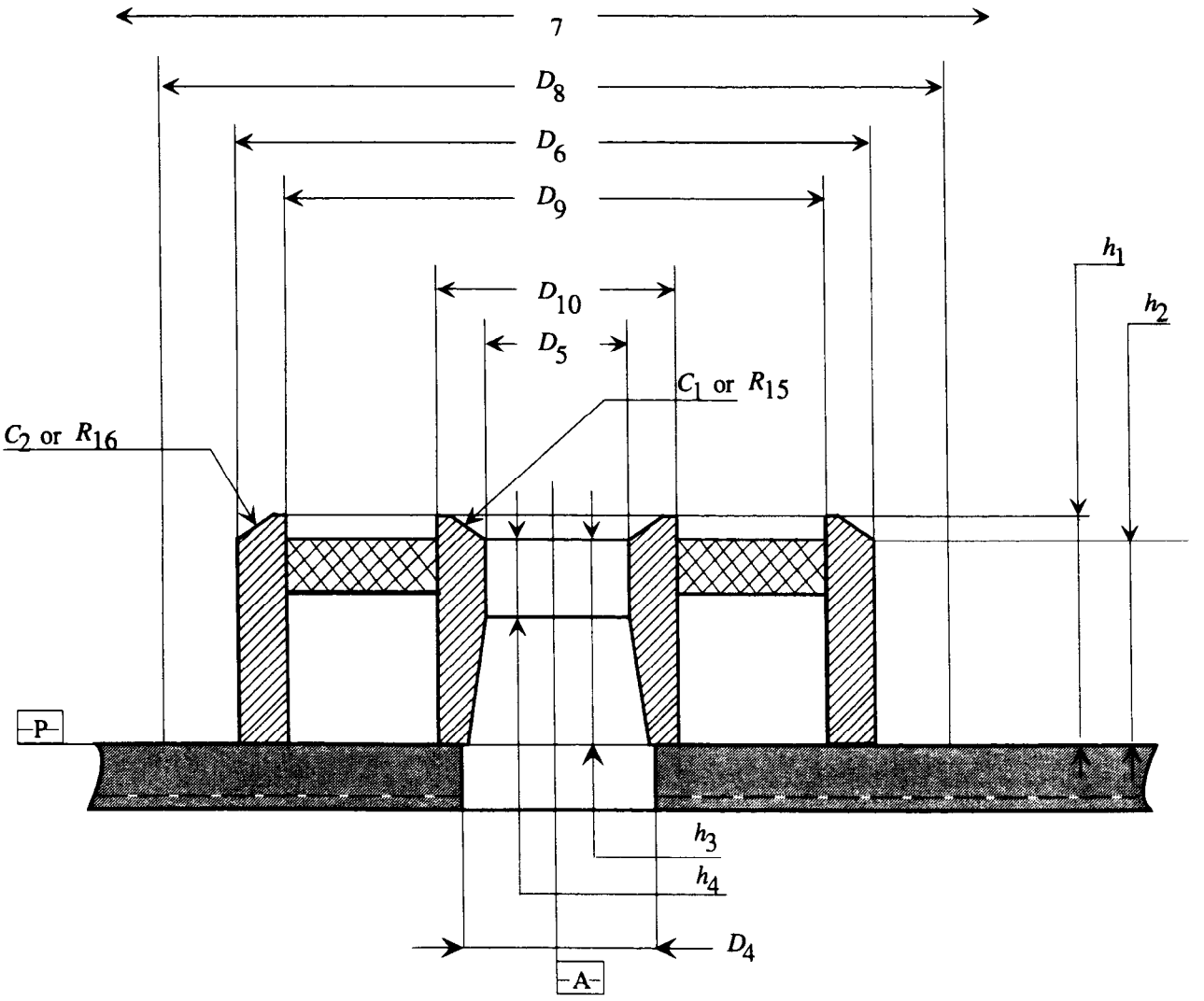


**Figure 13 - Hub dimensions and clamping zone**



Copyright International Organization for Standardization
Provided by IHS under license with ISO
No reproduction or networking permitted without license from IHS
Not for Resale

## 11.4 Mechanical characteristics

All requirements in this clause shall be met in the operating environment.

### 11.4.1 Material

The disk shall be made from any suitable materials such that it meets the requirements of this International Standard. The only material properties specified by this International Standard are the magnetic properties of the magnetizable zone in the hub (see 11.3.1) and the optical properties of the substrate in the Information Zone (see 11.5).

### 11.4.2 Mass

The mass of the disk shall not exceed 24,0 g.

### 11.4.3 Moment of inertia

The moment of inertia of the disk relative to axis A shall not exceed 0,020 g•m$^2$.

### 11.4.4 Imbalance

The imbalance of the disk relative to axis A shall not exceed 0,006 g•m.

### 11.4.5 Axial deflection

The axial deflection of the disk is measured as the axial deviation of the recording layer. Thus it comprises the tolerances on the thickness of the substrate, on its index of refraction and the deviation of the entrance surface from plane P. The nominal position of the recording layer with respect to reference plane P is determined by the nominal thickness of the substrate.

The deflection of any point of the recording layer in the Information Zone from its nominal position, in a direction normal to plane P, shall not exceed ± 0,22 mm for rotational frequencies of the disk up to 30 Hz.

### 11.4.6 Axial acceleration

The maximum allowed tracking error $e_{max}$ (see annex C) shall not exceed ± 1,0 µm, measured using the Reference Servo for axial tracking of the recording layer. The rotational frequency of the disk shall be 30,0 Hz ± 0,3 Hz. The stationary part of the motor is assumed to be motionless (no external disturbances). The measurement shall be made using a servo with the transfer function

$$H_s(i\omega) = \frac{1}{3}\left(\frac{\omega_0}{i\omega}\right)^2 \frac{1+\dfrac{3i\omega}{\omega_0}}{1+\dfrac{i\omega}{3\omega_0}}$$

where

$\omega = 2\pi f$

$\omega_0/2\pi = 870$ Hz

$i = \sqrt{-1}$

or any other servo with $|1+H|$ within 20 % of $|1+H_s|$ in the bandwidth of 30 Hz to 100 kHz. Thus, the disk shall not require an axial acceleration of more than 10 m/s$^2$ at low frequencies from the servo motor of the Reference Servo.

### 11.4.7 Radial runout

The radial runout of the tracks in the recording layer in the Information Zone is measured as seen by the optical head of the Reference Drive. Thus it includes the distance between the axis of rotation of the spindle and reference axis A, the tolerances on the dimensions between axis A and the location of the track, and effects of non-uniformities in the index of refraction.

The runout, defined as the difference between the maximum and minimum distance of the centre of any track from the axis of rotation, measured along a fixed radial line over one revolution of the disk, shall not exceed 50 µm at a rotational frequency of the disk of 30,0 Hz ± 0,3 Hz.

Copyright International Organization for Standardization
Provided by IHS under license with ISO
No reproduction or networking permitted without license from IHS
Not for Resale

### 11.4.8 Radial acceleration

The maximum allowed tracking error $e_{max}$ (see annex C) shall not exceed ± 0,15 µm, measured using the Reference Servo for radial tracking of the tracks. The rotational frequency of the disk shall be 30,0 Hz ± 0,3 Hz. The stationary part of the motor is assumed to be motionless (no external disturbances). The measurement shall be made using a servo with the transfer function

$$H_s(i\omega) = \frac{1}{3}\left(\frac{\omega_0}{i\omega}\right)^2 \frac{1+\dfrac{3i\omega}{\omega_0}}{1+\dfrac{i\omega}{3\omega_0}}$$

where

$\omega = 2\pi f$

$\omega_0/2\pi = 1230$ Hz

$i = \sqrt{-1}$

or any other servo with $|1+H|$ within 20 % of $|1+H_s|$ in the bandwidth of 30 Hz to 100 kHz. Thus, the disk shall not require a radial acceleration of more than 3 m/s$^2$ at low frequencies from the servo motor of the Reference Servo.

### 11.4.9 Tilt

The tilt is the angle which the normal to the entrance surface, averaged over an area of 1 mm in diameter, makes with the normal to plane P. It shall not exceed 5 mrad in the Information Zone.

## 11.5 Optical characteristics

### 11.5.1 Index of refraction

The index of refraction of the substrate in the Information Zone shall be within the range from 1,46 to 1,60.

### 11.5.2 Thickness of the substrate

The thickness of the substrate, from the entrance surface to the recording layer, in the Information Zone shall be

$$0{,}509\,\frac{n^3}{n^2-1}\;\frac{n^2+0{,}265}{n^2+0{,}593}\ \text{mm}\ \pm 0{,}050\ \text{mm}$$

where $n$ is the index of refraction.

### 11.5.3 Birefringence

The effect of the birefringence of the substrate is included in the measurement of the imbalance of the signals in Channel 2 of the Reference Drive (see 25.2).

### 11.5.4 Reflectance

The reflectance of the recording layer is the value of the reflectance of an unrecorded, grooved area of the Data Zone of the disk, measured through the substrate and does not include the reflectance of the entrance surface. The nominal value $R$ of the reflectance shall be specified by the manufacturer in byte 3 and byte 19 of the Control Tracks (see annex F).

The value of $R$ shall lie within the range from 0,12 to 0,25 for partially embossed or fully rewritable disks and for low reflectance fully embossed disks. The value of $R$ shall lie within the range from 0,50 to 0,90 for high reflectance fully embossed disks (see annex R).

The measured value $R_m$ of the reflectance shall be obtained under the conditions a) to f) of 9.2. Measurement shall be made in the Data Zone in any track without embossed data fields. At any point in the Data Zone of the disks with the value $R$ in Control Track, the value $R_m$ shall be equal to $R(1 \pm 0{,}15)$ and lie within the allowed range. At any point in the Data Zone of one disk, the following requirement shall be met (see annex R).

$$\frac{I_{OL\,max} - I_{OL\,min}}{I_{OL\,max} + I_{OL\,min}} \le 0{,}12$$

Copyright International Organization for Standardization
Provided by IHS under license with ISO
No reproduction or networking permitted without license from IHS Not for Resale

See 20.3 for the definition of $l_{OL}$.

# 12 Interface between cartridge and drive

## 12.1 Clamping method

When the cartridge is inserted into the drive, the shutter of the case is opened and the drive spindle engages the disk. The disk is held against the spindle by an axial clamping force, provided by the magnetizable material in the hub (see annex K) and the magnets in the spindle. The radial positioning of the disk is provided by the centering of the axis of the spindle in the centre hole of the hub. A cup-shaped turntable of the spindle shall support the disk in its clamping zone, determining the axial position of the disk in the case.

## 12.2 Clamping force

The clamping force exerted by the spindle on the hub shall not exceed 5 N.

## 12.3 Capture cylinder (see figure 14)

The capture cylinder is defined as the volume in which the spindle can expect the centre of the hole in the hub to be, just prior to capture, and with the cartridge constrained as in 10.4.4. The centre of the hole is defined as the point on axis A at a distance $h_1$ below plane P (see 11.3.1 and figure 13).

The size of the cylinder defines the permissible play of the disk inside its cavity in the case. The cylinder is referred to perfectly located and perfectly sized alignment and location pins in the drive; it includes the tolerances of those dimensions of the case and the disk which are between the two pins mentioned and the centre of the hub.

The bottom of the cylinder is parallel to plane Z, and shall be located a distance

$$L_{57} = 0{,}7 \text{ mm min.}$$

above plane Z. The top of the cylinder is located a distance

$$L_{58} = 2{,}3 \text{ mm max.}$$

above plane Z. The radius of the cylinder shall be

$$R_{17} = 1{,}4 \text{ mm max.}$$

and its centre shall be given by the nominal values of $L_{29}$ and $L_{32}$ in the drive.

## 12.4 Disk position in operating condition (see figure 14)

When the disk is in the operating condition within the drive, the position of plane P of the disk shall be

$$L_{59} = 2{,}4 \text{ mm} \pm 0{,}1 \text{ mm}$$

above plane Z of the case, and the axis of rotation shall be within a circle with a radius

$$R_{18} = 0{,}1 \text{ mm max.}$$

and a centre given by the nominal values of $L_{29}$ and $L_{32}$.

The torque to be exerted on the disk in the operating condition in order to maintain a rotational frequency of 30 Hz shall not exceed 0,01 N•m.

Copyright International Organization for Standardization
Provided by IHS under license with ISO
No reproduction or networking permitted without license from IHS
Not for Resale

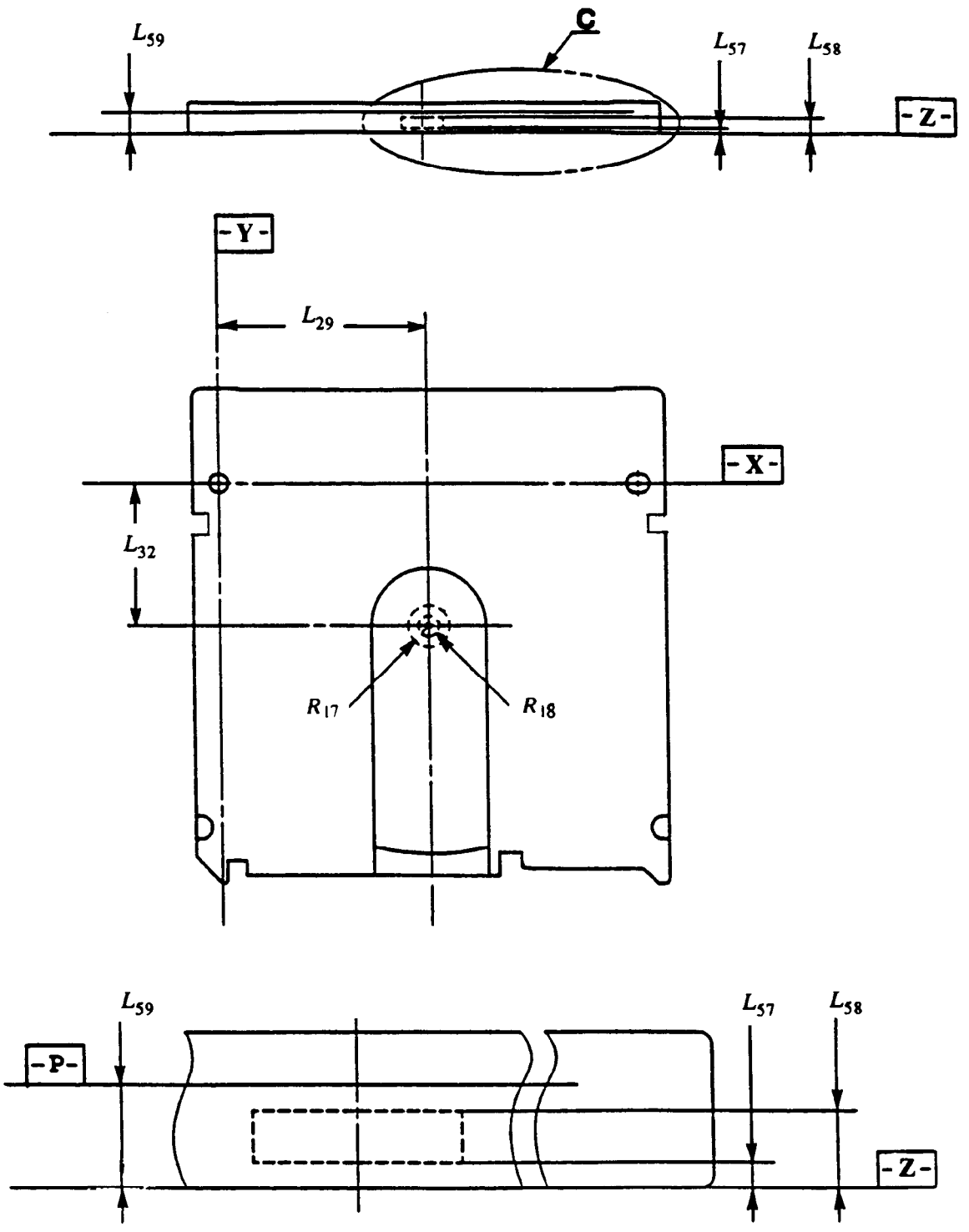


Detail C

**Figure 14 - Capture cylinder and disk position in operating condition.**

Copyright International Organization for Standardization
Provided by IHS under license with ISO
No reproduction or networking permitted without license from IHS
Not for Resale

# Section 3 : Format of information

## 13 Geometry of physical tracks

### 13.1 Physical track shape

The Information Zone shall contain tracks intended for the Continuous Servo tracking method.

A physical track consists of a groove-land-groove combination, where each groove is shared with a neighboring physical track. A groove is a trench-like feature, the bottom of which is located nearer to the entrance surface than the land. The centre of the physical track, i.e. where the recording is made, is the centre of the land. The grooves shall be continuous, except for ODFs in Lead-in and Lead-out Zones. The shape of the groove is determined by the requirements in clause 21.

Each physical track shall form a 360° turn of a continuous spiral.

### 13.2 Direction of track spiral

The disk shall rotate counter-clockwise as viewed from the optical head. The track shall then spiral outward from the inner diameter to the outer diameter.

### 13.3 Physical track pitch

The physical track pitch is the distance between adjacent physical track centrelines, measured in a radial direction. It shall be 1,39 μm ± 0,08 μm.

The width of a band of 10 000 physical tracks shall be 13,90 mm ± 0,10 mm.

## 14 Track format

### 14.1 Track number

Each logical track shall be identified by a track number.

Track 0 shall be the first track of the Data Zone. It shall be located at a radius of 24,00 mm ± 0,10 mm.

The track numbers of tracks located at radii larger than that of track 0 shall be increased by 1 for each track.

The track numbers of tracks located at radii smaller than that of track 0 shall be negative, and decrease by 1 for each track. Their value is given in the ID field in TWO's complement, thus track -1 is indicated by (FFFF).

### 14.2 Track layout

On each logical track there shall be 25 sectors.

Each sector shall comprise 725 bit combinations where each bit combination on the disk consists of 16 Channel bits.

The sectors shall be equally spaced over a track in such a way that the distance between the first Channel bit of a sector and the first Channel bit of the next sector shall be 11 600 Channel bits ± 3 Channel bits.

### 14.3 Clock frequencies and periods

The nominal clock frequency and period for each data band at the rotational speed of 30 Hz is shown in table 2 below. These values are for reference only. The absolute frequency and period shall be adjusted so that there is the correct number of Channel bits in one physical track by the formula below.

$$(30 + (2 \times \text{Data Band Number})) \times 16 \times 725$$

where 16 is the number of Channel bits per bit combination and 725 is the number of bit combinations per sector.

Copyright International Organization for Standardization
Provided by IHS under license with ISO
No reproduction or networking permitted without license from IHS
Not for Resale

**Table 2 - Nominal Clock Frequencies and Periods**

| Zone or band | Clock Frequency | Period T |
|---|---|---|
| Initial Zone | 8,700 MHz | 114,9 ns |
| Acquire Zone | 8,700 MHz | 114,9 ns |
| Test Zone | 8,700 MHz | 114,9 ns |
| Control Zone | 8,700 MHz | 114,9 ns |
| Band 0 | 10,440 MHz | 95,8 ns |
| Band 1 | 11,136 MHz | 89,8 ns |
| Band 2 | 11,832 MHz | 84,5 ns |
| Band 3 | 12,528 MHz | 79,8 ns |
| Band 4 | 13,224 MHz | 75,6 ns |
| Band 5 | 13,920 MHz | 71,8 ns |
| Band 6 | 14,616 MHz | 68,4 ns |
| Band 7 | 15,312 MHz | 65,3 ns |
| Band 8 | 16,008 MHz | 62,5 ns |
| Band 9 | 16,704 MHz | 59,9 ns |
| Control Zone | 8,700 MHz | 114,9 ns |
| Test Zone | 8,700 MHz | 114,9 ns |
| Buffer Zone | 8,700 MHz | 114,9 ns |

### 14.4 Radial alignment

The Headers of the sectors shall be radially aligned in such a way hat the angular distance between the first Channel bit of sectors in adjacent tracks within each data band, Lead-in Zone or Lead-out Zone shall be less than ± 4 Channel bits.

### 14.5 Sector number

The sectors on a track shall be numbered consecutively from 0 to 24.

## 15 Sector format

### 15.1 Sector layout

A sector shall comprise a Header, an Offset Detection Field (ODF) and a Recording field in which 512 user data bytes can be recorded. The Header of each sector shall be embossed. The Recording field can be empty, user-written or embossed. The length of the sector shall be 725 bytes nominally. Tolerances allowed by 14.2 are taken up by the Buffer, i.e. the last field of the sector. The length of the Header field is 52 bytes, the length of the ODF is 1 byte and the length of the Recording field is 672 bytes.

The layout of a sector is shown in figure 15. The numbers indicate the length of field in bytes.

Copyright International Organization for Standardization
Provided by IHS under license with ISO
No reproduction or networking permitted without license from IHS Not for Resale

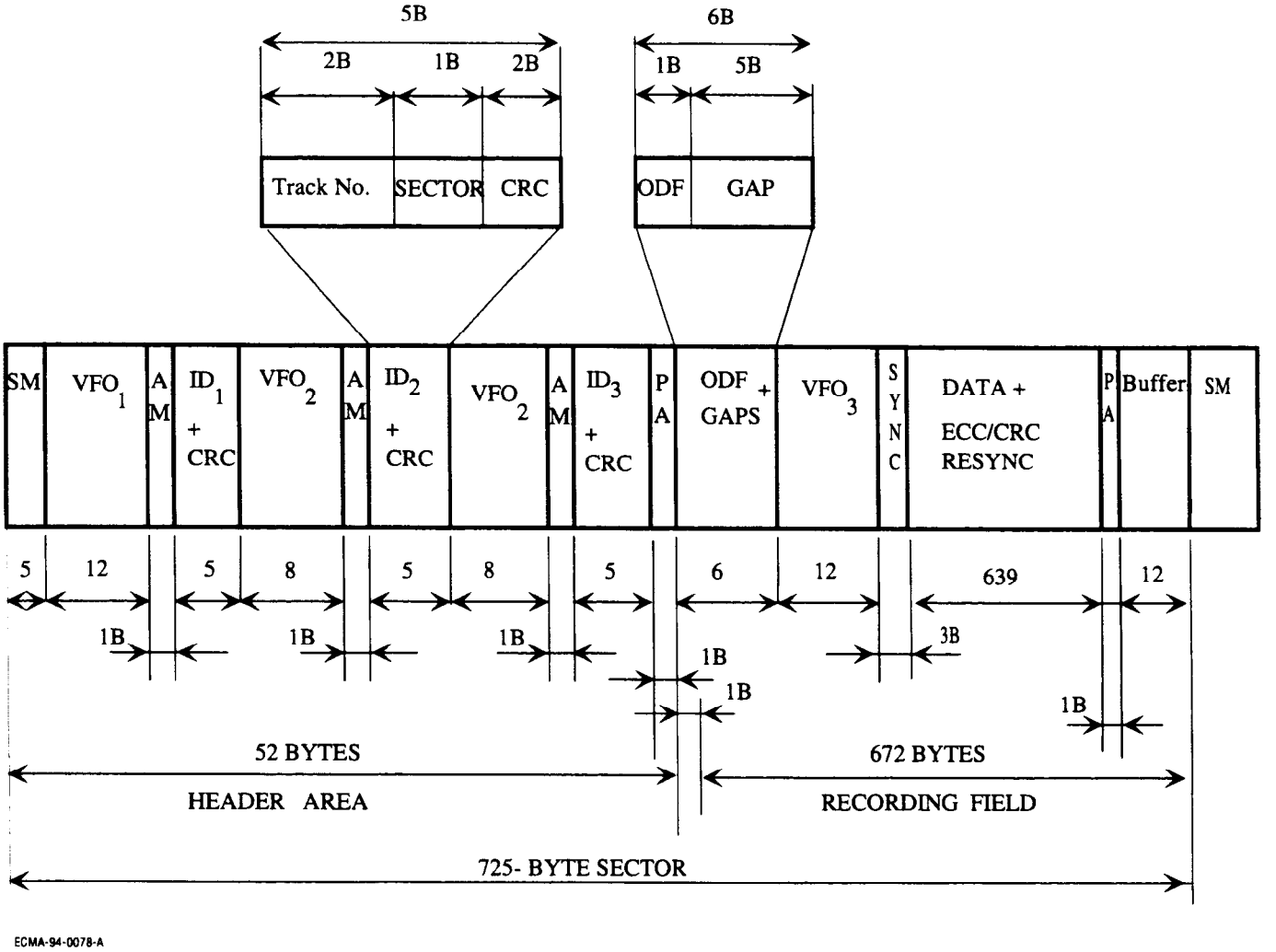


Note - Only in the Lead-in Zone and the Lead-out Zone, the ODF has no groove.

**Figure 15 - Sector Field Layout**

## 15.2 Sector Mark (SM)

The Sector Mark shall consist of an embossed pattern that does not occur in RLL(2,7) code (see clause 16), and is intended to enable the drive to identify the start of the sector without recourse to a phase-locked loop.

The Sector Mark shall have a length of 80 Channel bits. It shall consist of embossed, continuous long marks of different length followed by a lead-in to the $VFO_1$ field. The timing pattern of the Sector Mark shall be as shown in figure 16, where $T$ is the period of one Channel bit. The signal obtained from a mark is less than a signal obtained from no mark. The lead-in shall have the Channel bit pattern 0000010010.

Copyright International Organization for Standardization
Provided by IHS under license with ISO
No reproduction or networking permitted without license from IHS
Not for Resale

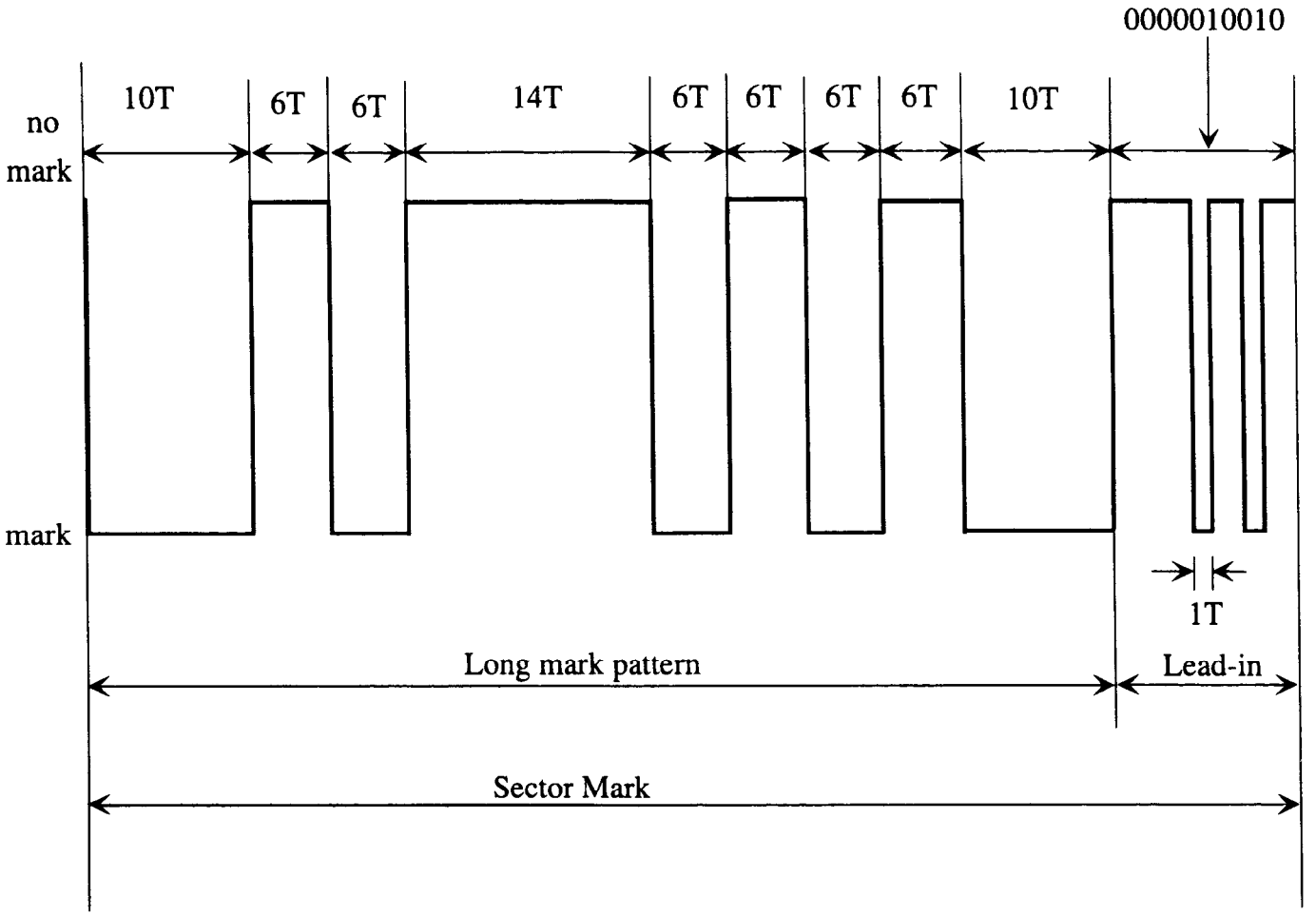


**Figure 16 - Pattern of the Sector Mark**

## 15.3 VFO fields

There shall be one embossed $VFO_1$ field and two embossed $VFO_2$ fields in the Header and one $VFO_3$ field in the Recording field to give the voltage-frequency-oscillator of the phase-locked loop of the read channel Channel bit synchronization. The information in $VFO_1$ and $VFO_3$ shall be identical in pattern and have the same length of 192 Channel bits. $VFO_2$ shall have a length of 128 Channel bits. The start of $VFO_2$ depends on the contents of the preceding ID field because of the closure required for the RLL(2,7) recording code. Therefore, $VFO_2$ shall be the appropriate one of two patterns differing only in the first Channel bit.

The continuous Channel bit pattern for the VFO fields shall be

| | | |
|---|---|---|
| $VFO_1$, 192 Channel bits: | 0100100100100.... | 10010 |
| $VFO_2$, 128 Channel bits: | 100100100100.... | 10010 |
| $VFO_2$, 128 Channel bits: | 000100100100.... | 10010 |
| $VFO_3$, 192 Channel bits: | 0100100100100.... | 10010. |

## 15.4 Address Mark (AM)

The Address Mark shall consist of an embossed pattern that does not occur in RLL(2,7) code. The field is intended to give the drive byte synchronization for the following ID field. It shall have a length of 16 Channel bits with the following pattern:

0100 1000 0000 0100.

Copyright International Organization for Standardization
Provided by IHS under license with ISO
No reproduction or networking permitted without license from IHS
Not for Resale

## 15.5 ID fields

The three ID fields shall each contain the address of the sector, i.e. the track number and the sector number of the sector, and CRC bytes. Each field shall consist of five bytes with the following embossed contents:

| | |
|---|---|
| 1st and 2nd byte | MSB, LSB of the track number |
| 3rd byte | |
| bits 7 and 6 | 00 shall indicate the $ID_1$ field<br>01 shall indicate the $ID_2$ field<br>10 shall indicate the $ID_3$ field |
| bit 5 | shall be set to ZERO |
| bits 4 to 0 | sector number in binary notation |
| 4th and 5th byte | CRC field containing the CRC bits computed over the first three bytes according to annex D. |

## 15.6 Postambles (PA)

The Postamble field shall be equal in length 16 Channel bits. There shall be a Postamble following $ID_3$ and a Postamble following the Data field. A Postamble allows closure of the last byte of the preceding CRC or Data field as required by the RLL(2,7) recording code (see 16). The Postamble is necessary to be able to start the following Gap or Buffer field in a predictable manner.

## 15.7 Offset Detection Field (ODF)

This field shall be an area equal in length to 16 Channel bits. In the Lead-in Zone and Lead-out Zone including two Control Zones it shall have neither grooves nor preformatted data. In the Data Zone it shall have grooves. Thus in the two Buffer Tracks in the Control Zones, track -1 and track 17940, this field shall have a groove on only one side.

## 15.8 Gap

The Gap shall be a field with a nominal length of 80 Channel bits. Its contents are not specified and shall be ignored on interchange, but shall not be embossed. It is the first field of the Recording field, and gives the drive some time for processing after it has finished reading the header and before it has to erase, write or read the $VFO_3$ field.

The length of the Gap has a tolerance of ± 8 Channel bits, i.e. the following $VFO_3$ field can start between 72 and 88 Channel bits after the ODF. Moreover, it need not start exactly on a Channel bit position as extrapolated from the header. The tolerance is subtracted from the length of the Buffer field, e.g. a Gap length of 85,3 Channel bits results in a reduction of the Buffer length by 5,3 Channel bits.

## 15.9 Sync

The Sync field is intended to allow the drive to obtain byte synchronization for the following Data field. It shall have a length of 48 Channel bits and be recorded with the Channel bit pattern

0100 0010 0100 0010 0010 0010 0100 0100 1000 0010 0100 1000

## 15.10 Data field

The Data field is intended for recording User data. It shall have a length of 639 bytes and shall comprise

- 512 bytes of user data
- 4 bytes the contents of which are not specified by this International Standard and shall be ignored in interchange
- 4 bytes of CRC
- 80 bytes of ECC, and
- 39 bytes for resynchronization.

The disposition of these bytes in the Data field with their five-way interleave and the contents of the last three categories is specified in annex E.

### 15.10.1 User data bytes

The user data bytes are at the disposal of the user for recording information.

--`,,```,,,,````-`-`,,`,,`,`,,`---

Copyright International Organization for Standardization
Provided by IHS under license with ISO
No reproduction or networking permitted without license from IHS
Not for Resale

### 15.10.2 CRC and ECC bytes

The Cyclic Redundancy Check bytes and Error Correction Code bytes are used by the error detection and correction system to rectify erroneous data. The ECC is a Reed-Solomon code of degree 16. The bytes shall be as specified in annex E.

### 15.10.3 Resync bytes

The Resync bytes enable a drive to regain byte synchronization after a large defect in the Data field. Their content and location in the Data field shall be as specified in annex E.

## 15.11 Buffer field

The Buffer field shall have a length of 192 Channel bits ± 48 Channel bits and shall not contain any data. The tolerance is needed for four reasons. Firstly, the tolerance on the header-to-header distance as specified in 14.2. Secondly, the tolerance in the start of the $VFO_3$ field as specified in 15.8. Thirdly, the actual length of the written data, as determined by the runout of the track and the speed variations of the disk during writing of the data. Fourthly, erasing these entire written data whose length has the tolerance explained above.

# 16 Recording code

The 8-bit bytes in the three Address fields and in the Data field, except for the Resync bytes, shall be converted to Channel bits on the disk according to table 3. All other fields in a sector have already been defined in terms of Channel bits. Each ONE Channel bit shall be recorded as a mark produced by a write pulse of the appropriate power and width.

The recording code used to record all data in the Information Zone on the disk shall be the run-length limited code known as RLL(2,7).

**Table 3 - Conversion of input bits to Channel bits**

| Input bits | Channel bits |
|---|---|
| 10 | 0100 |
| 11 | 100100 |
| 000 | 00100100 |
| 010 | 1000 |
| 011 | 001000 |
| 0010 | 00001000 |
| 0011 | 000100 |

The coding start at the first bit of the first byte of the field to be converted. After a Resync field the RLL(2,7) coding shall start again with the first bit of the next byte of input data.

The RLL(2,7) coding can seldom be terminated at the end of the last input byte in a field, due to leftover bits which cannot be converted on their own. To achieve closure of the recording code, three pad bits are added at the end of field before converting the data to Channel bits. Table 4 defines the closure for all possible combinations of leftover bits.

The $ID_1$ and $ID_2$ fields shall lead to one of the two patterns for the $VFO_2$ (table 4a).

The bytes in the Data field preceding a Resync field shall lead to the Resync pattern (table 4b).

With the exception of providing a suitable closure pattern for the $ID_3$ field and the last byte in the PA field following the $ID_3$ field and the last byte in the Data field, respectively, are not specified by this International Standard and shall be ignored in interchange.



Copyright International Organization for Standardization
Provided by IHS under license with ISO
No reproduction or networking permitted without license from IHS Not for Resale

**Table 4a - Transition from the end of the $ID_1$ and $ID_2$ field to the $VFO_2$ field**

| Leftover input bits | Pad bits | Channel bits of the closure pattern, leading to one of the two $VFO_2$ patterns | |
|---|---|---|---|
| none | 010 | | 100100100100100100.....10010 |
| 0 | 010 | 00 | 100100100100100100.....10010 |
| 1 | 010 | 01 | 000100100100100100.....10010 |
| 00 | 010 | 0001 | 000100100100100100.....10010 |
| 01 | 010 | 1001 | 000100100100100100.....10010 |
| 001 | 010 | 001001 | 000100100100100100.....10010 |
| End of the ID field ⟶ | | End of the ID field → | ⟵ $VFO_2$ field ⟶ |

**Table 4b - Transition from the byte in the Data field preceding a Resync to the Resync field**

| Leftover input bits | Pad bits | Channel bits of the closure pattern, leading to the Resync pattern | |
|---|---|---|---|
| none | 011 | | 0010000000100100 |
| 0 | 011 | 00 | 0010000000100100 |
| 1 | 011 | 01 | 0010000000100100 |
| 00 | 011 | 0001 | 0010000000100100 |
| 01 | 011 | 1001 | 0010000000100100 |
| 001 | 011 | 001001 | 0010000000100100 |
| End of the ID field ⟶ | | End of the ID field ⟶ | ⟵ Resync ⟶ |

# 17 Format of the Information Zone

## 17.1 General description of the Information Zone

The Information Zone shall contain all information on the disk relevant for data interchange. The information comprises embossed tracking provisions, embossed headers, embossed data and, possibly, user-written data. In this clause, the term 'data' is reserved for the content of the data field of a sector, which, in general, is transferred to the host. This clause defines the layout of the information; the characteristics of signals obtained from this information are specified in section 4.

## 17.2 Division of the Information Zone

The Information Zone is divided in three parts: a Lead-in Zone, a Data Zone and a Lead-out Zone. The Data Zone is intended for the recording of user data. The Lead-in and Lead-out Zones contain control information for the drive and zones for performing tests by the manufacturer or drive.

Copyright International Organization for Standardization
Provided by IHS under license with ISO
No reproduction or networking permitted without license from IHS
Not for Resale

**Table 5 - Layout of the Information Zone**

| Zone or Band | Nominal Radius Start-End (mm) | Number of Tracks | Track Number Start-End | Number of Physical Tracks |
|---|---|---|---|---|
| Lead-in Zone | | | | |
| Initial Zone | 22,60 - 22,90 | N/A | N/A | N/A |
| Acquire Zone | | | | |
| Lead-in tracks | 22,90 - 23,53 | 450 | -790 - -341 | 450 |
| Focus tracks | | 4 | -340 - -337 | 4 |
| Inner Test Zone | | | | |
| for manufacturers | 23,53 - 23,76 | 160 | -336 - -177 | 160 |
| for drives | 23,76 - 23,98 | 160 | -176 - -17 | 160 |
| Inner Control Zone | 23,98 - 24,00 | 16 | -16 - -1 | 16 |
| Data Zone | | | | |
| Band 0 | 24,00 - 25,60 | 1380 | 0 - 1379 | 1150 |
| Band 1 | 25,60 - 27,20 | 1472 | 1380 - 2851 | 1150 |
| Band 2 | 27,20 - 28,80 | 1564 | 2852 - 4415 | 1150 |
| Band 3 | 28,80 - 30,40 | 1656 | 4416 - 6071 | 1150 |
| Band 4 | 30,40 - 32,00 | 1748 | 6072 - 7819 | 1150 |
| Band 5 | 32,00 - 33,60 | 1840 | 7820 - 9659 | 1150 |
| Band 6 | 33,60 - 35,20 | 1932 | 9660 - 11591 | 1150 |
| Band 7 | 35,20 - 36,80 | 2024 | 11592 - 13615 | 1150 |
| Band 8 | 36,80 - 38,40 | 2116 | 13616 - 15731 | 1150 |
| Band 9 | 38,40 - 40,00 | 2208 | 15732 - 17939 | 1150 |
| Lead-out Zone | | | | |
| Outer Control Zone | 40,00 - 40,02 | 16 | 17940 - 17955 | 16 |
| Outer Test Zone | | | | |
| for drives | 40,02 - 40,24 | 160 | 17956 - 18115 | 160 |
| for manufacturers | 40,24 - 40,46 | 160 | 18116 - 18275 | 160 |
| Buffer Zone | 40,46 - 41,00 | 383 | 18276 - 18658 | 383 |

Note - The radii of a zone in the table are the nominal values of the radius of the centre of the first track and of the radius of the centre of the last track of the zone.

The division of the Information Zone shall be as given in table 5. The tolerance on the inner radius of the Data Zone is specified in 14.1; the tolerance on other radii is determined by the tolerance on the track pitch as specified in 13.3.

### 17.2.1 Initial Zone

The Initial Zone is intended to enable a drive to lock its axial tracking (focusing) servo. It shall have either a flat reflective layer, or such a layer with uninterrupted grooves over complete tracks as specified in clause 21, or such tracks with embossed Headers or any combination of the above.

### 17.2.2 Acquire Zone

The Acquire Zone shall consist of two parts, each containing embossed grooves and Headers. The first part shall be a band of Lead-in tracks with no data in the Recording fields of the sectors.

The second part shall be a band of Focus tracks with a repeated Channel bit pattern 100100... embossed in the $VFO_3$, SYNC and the 639 bytes of the Data fields of the Recording field of each sector. These tracks are intended to enable a drive to remove focus offsets by maximizing the read signal from the Channel bit pattern.

### 17.2.3 Test Zones

There shall be an Inner Test Zone and an Outer Test Zone. The Test Zones are areas with embossed grooves, Headers and Recording fields.

Copyright International Organization for Standardization
Provided by IHS under license with ISO
No reproduction or networking permitted without license from IHS Not for Resale

The Test Zone for drives is intended for tests to enable a drive to set its write power, and shall not consist of embossed data in the case of fully rewritable or partially embossed disks. The tracks used for testing should be chosen from the Test Zone in a random way, so as to ensure a gradual degradation of the entire Test Zone due to use. Then each track in this Zone will remain representative for the characteristics of tracks in the Data Zone of the disk.

The Test Zone for the manufacturer is intended for quality tests by the media manufacturer. The Test Zone for drives shall not be used for such tests, as they can cause serious degradation of the Test Zone.

### 17.2.4 Control Zones

There shall be an Inner Control Zone and an Outer Control Zone. Each Control Zone shall contain 15 tracks with embossed grooves and sectors formatted according to clause 15 and one track, called Buffer track with an embossed groove and Headers according to clause 15. In the Inner Control Zone track -1 is the Buffer track, in the Outer Control Zone track 17940 is the Buffer track. The Data fields of all sectors in the two Control Zones, except in the Buffer tracks, shall be identical, and contain embossed Control data for the drive. The Control data in a Data field is specified in annex F.

The Recording fields of all sectors of the two Buffer tracks shall be without embossed data for fully rewritable and partially embossed disks. For fully embossed disks the user data bytes in these fields shall be set to (FF).

### 17.2.5 Data Zone

The Data Zone shall contain embossed grooves and Headers. The Recording fields can be user-written or contain embossed data, in the format of 15. The layout of the Data Zone is specified in clause 18.

The Data Zone shall be divided into 10 bands numbered 0 to 9. Each band shall consist of the same number of physical tracks. These physical tracks are organized into groups called physical track groups Each such group is further divided into logical tracks. Each band has 46 physical track groups. The number of logical tracks per physical track group increases from band to band moving from the inner radius to the outer radius (from 30 to 48 logical tracks per physical track group). Within any band, the angular recording density shall be constant. Physical track groups comprise an integral number of physical tracks and begin and end on the same radial line.

The hierarchy is thus:

- 25 sectors = 1 logical track
- 30 to 48 logical tracks (25 physical tracks) = 1 physical track group
- 46 physical track groups = 1 band
- 10 bands = the Data Zone

The Data Zone shall start with track 0 and end with track 17939.

### 17.2.6 Buffer Zone

The Buffer Zone shall contain embossed grooves, Headers and ODFs.

## 18 Format of the Data Zone

The Data Zone shall contain four Defect Management Areas (DMAs), two at the beginning of the zone after the two Buffer tracks in the Data Zone specified in 18.1 and two at the end of the zone before the two Buffer Tracks. The area between the two sets of DMAs is called the User Area. The User Area shall contain a Rewritable Zone or an Embossed Zone or a Partially Embossed Zone. The User Area shall be interrupted by the Buffer tracks at each Band boundary as specified in 18.1.

The layout of the Data Zone and adjacent zones is shown in table 6, where the tracks marked R/W are rewritable.

Copyright International Organization for Standardization
Provided by IHS under license with ISO
No reproduction or networking permitted without license from IHS
Not for Resale

**Table 6 - Layout of the Data Zone, the Control Zones and the Buffer Tracks**

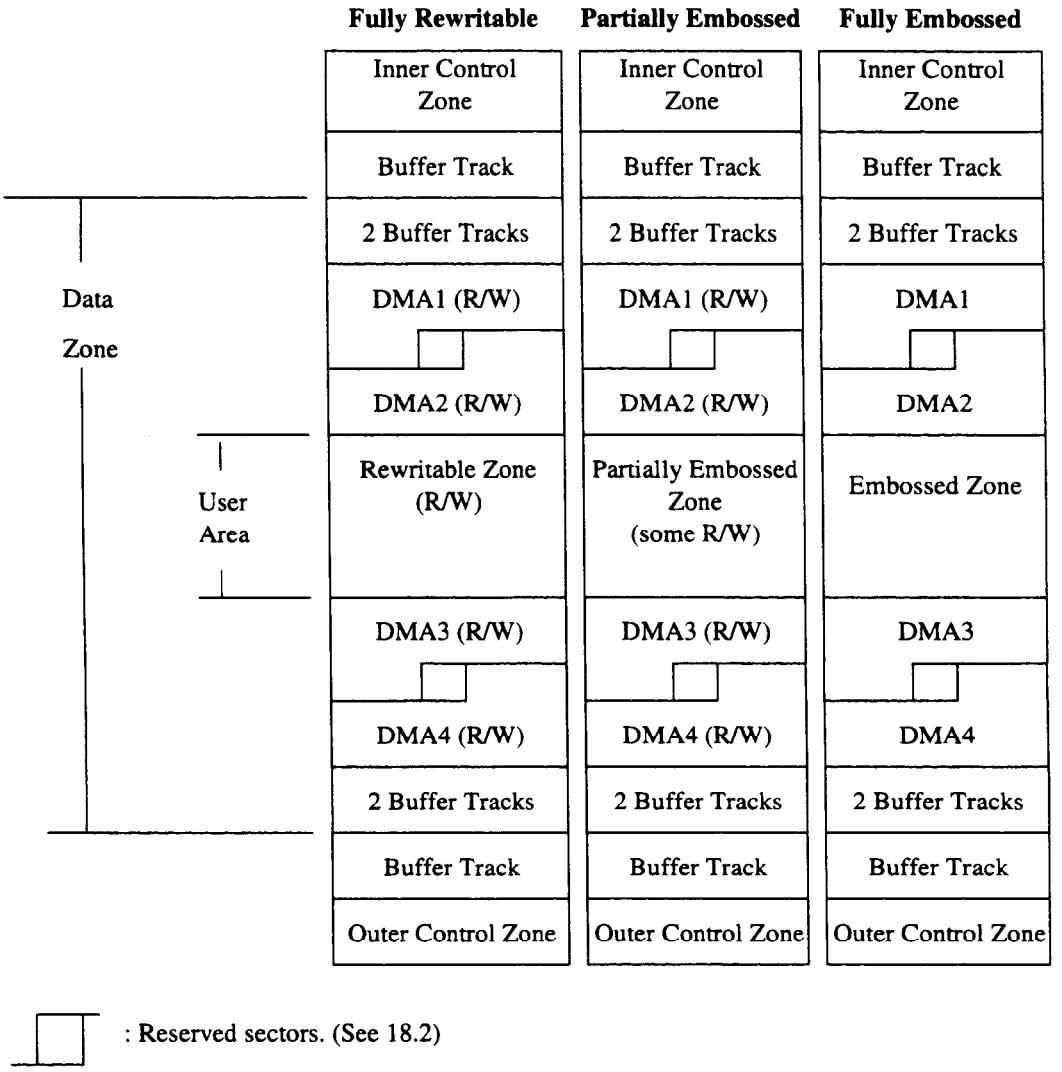


## 18.1 Buffer tracks in the Data Zone

The two tracks at the beginning of each band and the two tracks at the end of each band of the Data Zone of any Types of disks shall be Buffer tracks. The Buffer tracks shall contain embossed grooves and Headers, and shall not be used for the user data.

- **Bands with rewritable sectors**

  The sectors of the Buffer tracks of fully rewritable disks and bands with rewritable sectors of partially embossed disks shall not contain data or embossed data in the recording field.

- **Bands with embossed sectors**

  The sectors of tracks 17933 to 17934 of fully embossed disks and partially embossed disks shall be Buffer tracks also. The sectors of Buffer tracks of fully embossed disks and bands with embossed sectors of partially embossed disks shall contain all (FF) bytes in their data fields. However the Buffer tracks 17933 to 17934 and 17938 to 17939 of partially embossed disks shall contain no embossed data in the recording field.

## 18.2 Defect Management Areas (DMAs)

The four Defect Management Areas contain information on the structure of the Data Zone and on the defect management. The length of each DMA shall be 36 sectors. Two of the DMAs, DMA1 and DMA2, shall be located near the inner diameter of the disk; two others, DMA3 and DMA4, shall be located near the outer diameter of the disk. The boundaries of the DMAs are indicated in table 7.



Copyright International Organization for Standardization
Provided by IHS under license with ISO
No reproduction or networking permitted without license from IHS Not for Resale

**Table 7 - Locations of the DMAs**

| | Beginning | | Ending | | Number of sectors |
|---|---|---|---|---|---|
| | Track No. | Sector No. | Track No. | Sector No. | |
| DMA1 | 2 | 0 | 3 | 10 | 36 |
| Reserved | 3 | 11 | 3 | 13 | 3 |
| DMA2 | 3 | 14 | 4 | 24 | 36 |
| DMA3 | 17935 | 0 | 17936 | 10 | 36 |
| Reserved | 17936 | 11 | 17936 | 13 | 3 |
| DMA4 | 17936 | 14 | 17937 | 24 | 36 |

The contents of the groups of 3 Reserved sectors in table 7 are not specified by this International Standard, and shall be ignored in interchange.

Each DMA shall contain a Disk Definition Structure (DDS), a Primary Defect List (PDL), and a Secondary Defect List (SDL). The contents of the four PDLs shall be identical and the contents of the four SDLs shall be identical. The only differences between the contents of the four DDSs shall be the pointers to each associated PDL and SDL.

After initialization of the disk, each DMA shall have the following content:

- The first DMA sector shall contain the DDS
- The second DMA sector shall be the first sector of the PDL for fully rewritable or partially embossed disks
- The SDL shall be located immediately after the PDL for fully rewritable or partially embossed disks.

The lengths of the PDL and SDL are determined by the number of entries in each. Fully embossed disks do not contain any PDLs or SDLs.

The content of the DMA sectors following the SDL is not specified for fully rewritable and partially embossed disks and shall be ignored in interchange. The bytes of the Data fields of the DMA sectors following the DDS for fully embossed disks shall be set to (FF).

The contents of the DDS are specified in 18.3; those of the PDL and SDL are specified in 19.1.5 and 19.1.6.

## 18.3 Disk Definition Structure (DDS)

The DDS shall consist of a table with a length of one sector. It specifies the method of initialization of the disk, the division of the rewritable, partially embossed and embossed zones into groups, the kind of data sectors within each band, and the start addresses of the PDL and SDL. The DDS shall be recorded in the first sector of each DMA at the end of initialization of the disk. On a fully embossed disk the DDS shall be embossed.

For partially embossed disks, values for some of the DDS parameters are specified by the manufacturer and recorded in the Control Zones.

The information on the disk structure given in table 8 shall be recorded in each of the four DDSs.

Copyright International Organization for Standardization
Provided by IHS under license with ISO
No reproduction or networking permitted without license from IHS
Not for Resale

**Table 8 - Byte assignment of the Disk Definition Structure**

| Byte No. | Description | Fully Rewritable | Partially Embossed | Fully Embossed |
|---|---|---|---|---|
| 0 | DDS Identifier | (0A) | (0A) | (0A) |
| 1 | DDS Identifier | (0A) | (0A) | (0A) |
| 2 | Reserved | (00) | (00) | (00) |
| 3 | Disk is fully embossed | N/A | N/A | (00) |
| | Disk has been certified | (01) | (01) | N/A |
| | Disk has not been certified | (02) | (02) | N/A |
| 4 | Number of groups MSB | (00) | (00) | (00) |
| 5 | Number of groups LSB (1 or 10) | (01\|0A) | (0A) | (01\|0A) |
| 6 | Disk layout Type 0 | (01) | (01) | (02) |
| 7 | Disk layout Type 1 | (00\|01) | (01/02) | (00\|02) |
| 8 | Disk layout Type 2 | (00\|01) | (01/02) | (00\|02) |
| 9 | Disk layout Type 3 | (00\|01) | (01/02) | (00\|02) |
| 10 | Disk layout Type 4 | (00\|01) | (01/02) | (00\|02) |
| 11 | Disk layout Type 5 | (00\|01) | (01/02) | (00\|02) |
| 12 | Disk layout Type 6 | (00\|01) | (01/02) | (00\|02) |
| 13 | Disk layout Type 7 | (00\|01) | (01/02) | (00\|02) |
| 14 | Disk layout Type 8 | (00\|01) | (01/02) | (00\|02) |
| 15 | Disk layout Type 9 | (00\|01) | (02) | (00\|02) |
| 16 | Start Address of PDL, Track MSB | - | - | (FF) |
| 17 | Start Address of PDL | - | - | (FF) |
| 18 | Start Address of PDL, Track LSB | - | - | (FF) |
| 19 | Start Address of PDL, Sector | - | - | (FF) |
| 20 | Start Address of SDL, Track MSB | - | - | (FF) |
| 21 | Start Address of SDL | - | - | (FF) |
| 22 | Start Address of SDL, Track LSB | - | - | (FF) |
| 23 | Start Address of SDL, Sector | - | - | (FF) |
| 24-511 | (00) | (00) | (00) | (00) |

In table 8

the symbol "-" means that the appropriate value is to be entered in the DDS, "N/A" means "not applicable". For bytes 6 to 15, the setting (01) means rewritable, (02) embossed and (00) not applicable.

An entry in the form "(**aa**|**bb**)" indicates:

**aa** is the value to be used when 1 group is employed, and
**bb** is the value to be used when 10 groups are employed.

An entry in the form "(**aa/bb**)" indicates:

**aa** is the value to be used when the band is rewritable, and
**bb** is the value to be used when the band is embossed.

### 18.3.1 Fully rewritable disks

The user area of fully rewritable disks shall contain a Rewritable Zone. The Rewritable Zone is intended for the user to write data into. The data field of all sectors in this zone shall not contain any embossed data.

The Rewritable Zone shall extend from sector 0 of track 5 to the last sector of track 17934 excluding interrupting buffer tracks. Every band of fully rewritable disks shall be recorded in bytes 6 to 15 of the DDS as being rewritable.

Copyright International Organization for Standardization
Provided by IHS under license with ISO
No reproduction or networking permitted without license from IHS Not for Resale

### 18.3.2 Fully embossed disks

The user area of fully embossed disks shall have an Embossed Zone. It shall contain data embossed by the manufacturer of the disk. The layout of the Data field of all sectors in this zone shall be as specified in annex E.

The Embossed Zone shall extend from sector 0 of track 5 to the last sector of track 17934 excluding interrupting buffer tracks. Every band of fully embossed disks shall be recorded in bytes 6 to 15 of the DDS as being embossed.

### 18.3.3 Partially embossed disks

The user area of partially embossed disks shall have a Partially Embossed Zone. The Partially Embossed Zone shall extend from sector 0 of track 5 to the last sector of track 17932. Each band of partially embossed disks shall be recorded in bytes 6 to 15 of the DDS as being either rewritable or embossed (except band 0 which is always rewritable and band 9 which is always embossed.)

Band 0 of partially embossed disks shall contain only rewritable sectors. The embossed zone shall start from sector 0 of the first track in one of the bands of bands 1 through 9 and shall end at track 17932 in band 9. The layout of the Data field of all sectors in this zone shall be as specified in annex E.

## 18.4 Partitioning

### 18.4.1 Fully rewritable disks

During initialization of the disk, the Rewritable Zone shall be partitioned into 1 or 10 consecutive groups. If one group is used, it shall span the entire User Area; if 10 groups are used, each group shall span one complete band excluding the two buffer tracks at the beginning and the two buffer tracks at the end of each band with the exception of tracks 2 to 4 in band 0 and tracks 17935 to 17937 of band 9. Each group shall comprise full tracks of data sectors followed by full tracks of spare sectors. The number of spare tracks per group are shown in table 9.

### 18.4.2 Partially embossed disks

During preparation of the embossed data for manufacturing of the disk, the disk shall be partitioned into 10 groups. Partially embossed disks shall have one to nine rewritable group(s) starting from Group 0, and the rest of group(s) shall be embossed. Thus, rewritable group(s) shall be located inner area and embossed group(s) shall be located outer area of Partially Embossed Zone. The data and spare (or Parity) area characteristics of a group are taken from either the rewritable or the fully embossed definition, whichever is appropriate. Each group shall comprise full tracks of data sectors followed by full tracks of spare sectors or parity sectors and shall span one complete band excluding the two buffer tracks at the beginning and the two buffer tracks at the end of each band with the exception of tracks 2 to 4 in band 0 and tracks 17933 to 17937 of band 9. The number of spare sector and parity sector tracks for each band is given in table 9 below.

Bytes 0 to 23 of the DDS for the disk shall be recorded in the Control tracks.

### 18.4.3 Fully embossed disks

During preparation of the embossed data for manufacturing of the disk, the disk shall be partitioned into either 1 or 10 groups. If one group is used, it shall span the entire User Area; if 10 groups are used, each of the 10 groups will span one band excluding the two buffer tracks at the beginning and the two buffer tracks at the end of each band with the exception of DMA tracks 2 to 4 in band 0 and tracks 17935 to 17937 of band 9. Each group shall comprise full tracks of data sectors followed by full tracks of parity sectors. The number of parity sector tracks for each band is given in table 9.

Notes to table 9

1 - The location of the spare sectors is the same for the rewritable bands of Type P-ROM and GRP10-R/W. The location of the parity sectors is the same for the embossed bands of Type P-ROM and GRP10-ROM.

2 - The total number of parity tracks of GRP1-ROM (693 tracks = 17325 sectors) consists of 17199 parity sectors and 126 consecutive unused parity sectors (see 19.2).



Copyright International Organization for Standardization
Provided by IHS under license with ISO
No reproduction or networking permitted without license from IHS Not for Resale

©ISO/IEC

## Table 9 - Usage of Tracks

GRP1-R/W

| Band Number | Number of Sector/ Physical Tracks | Start Track | Buffer Tracks | DMA 1&2 Tracks | Data Tracks | Number of Data Tracks | Spare Tracks | Number of Spare Tracks | Buffer Tracks | DMA 3&4 Tracks | Buffer Tracks | End Track |
|---|---|---|---|---|---|---|---|---|---|---|---|---|
| 0 | 30 | 0 | 0-1 | 2-4 | 6-1377 | 1373 | - | 0 | - | - | 1378-1379 | 1379 |
| 1 | 32 | 1380 | 1380-1381 | - | 1382-2849 | 1468 | - | 0 | - | - | 2850-2851 | 2851 |
| 2 | 34 | 2852 | 2852-2853 | - | 2854-4413 | 1660 | - | 0 | - | - | 4414-4416 | 4416 |
| 3 | 36 | 4416 | 4416-4417 | - | 4418-6069 | 1652 | - | 0 | - | - | 6070-6071 | 6071 |
| 4 | 38 | 6072 | 6072-6073 | - | 6074-7817 | 1744 | - | 0 | - | - | 7818-7819 | 7819 |
| 5 | 40 | 7820 | 7820-7821 | - | 7822-9657 | 1836 | - | 0 | - | - | 9658-9659 | 9659 |
| 6 | 42 | 9660 | 9660-9661 | - | 9662-11589 | 1928 | - | 0 | - | - | 11690-11691 | 11691 |
| 7 | 44 | 11692 | 11692-11693 | - | 11594-13613 | 2020 | - | 0 | - | - | 13614-13616 | 13616 |
| 8 | 46 | 13616 | 13616-13617 | - | 13618-16729 | 2112 | - | 0 | - | - | 16130-16731 | 16731 |
| 9 | 48 | 15732 | 15732-15733 | - | 16734-17893 | 2160 | 17894-17934 | 41 | - | 17935-17937 | 17938-17939 | 17939 |
| Total | | | | | | 17853 | | 41 | | | | |

GRP10-R/W

| Band Number | Number of Sector/ Physical Tracks | Start Track | Buffer Tracks | DMA 1&2 Tracks | Data Tracks | Number of Data Tracks | Spare Tracks | Number of Spare Tracks | Buffer Tracks | DMA 3&4 Tracks | Buffer Tracks | End Track |
|---|---|---|---|---|---|---|---|---|---|---|---|---|
| 0 | 30 | 0 | 0-1 | 2-4 | 6-1374 | 1370 | 1376-1377 | 3 | - | - | 1378-1379 | 1379 |
| 1 | 32 | 1380 | 1380-1381 | - | 1382-2846 | 1465 | 2847-2849 | 3 | - | - | 2850-2851 | 2851 |
| 2 | 34 | 2852 | 2852-2853 | - | 2854-4409 | 1556 | 4410-4413 | 4 | - | - | 4414-4416 | 4416 |
| 3 | 36 | 4416 | 4416-4417 | - | 4418-6065 | 1648 | 6066-6069 | 4 | - | - | 6070-6071 | 6071 |
| 4 | 38 | 6072 | 6072-6073 | - | 6074-7813 | 1740 | 7814-7817 | 4 | - | - | 7818-7819 | 7819 |
| 5 | 40 | 7820 | 7820-7821 | - | 7822-9653 | 1832 | 9654-9657 | 4 | - | - | 9658-9659 | 9659 |
| 6 | 42 | 9660 | 9660-9661 | - | 9662-11585 | 1924 | 11586-11589 | 4 | - | - | 11690-11691 | 11691 |
| 7 | 44 | 11592 | 11592-11593 | - | 11594-13608 | 2015 | 13609-13613 | 5 | - | - | 13614-13616 | 13616 |
| 8 | 46 | 13616 | 13616-13617 | - | 13618-15724 | 2107 | 15725-15729 | 5 | - | - | 16130-16731 | 16731 |
| 9 | 48 | 15732 | 15732-15733 | - | 16734-17929 | 2196 | 17930-17934 | 5 | - | 17935-17937 | 17938-17939 | 17939 |
| Total | | | | | | 17853 | | 41 | | | | |

Copyright International Organization for Standardization
Provided by IHS under license with ISO
No reproduction or networking permitted without license from IHS
Not for Resale

**Table 9 - Usage of Tracks (Continued)**

GRP1-ROM

| Band Number | Number of Sector/ Physical Tracks | Start Track | Buffer Tracks | DMA 1&2 Tracks | Data Tracks | Number of Data Tracks | Parity Tracks | Number of Parity Tracks | Buffer Tracks | DMA 3&4 Tracks | Buffer Tracks | End Track |
|---|---|---|---|---|---|---|---|---|---|---|---|---|
| 0 | 30 | 0 | 0-1 | 2-4 | 5-1377 | 1373 | - | 0 | - | - | 1378-1379 | 1379 |
| 1 | 32 | 1380 | 1380-1381 | - | 1382-2849 | 1468 | - | 0 | - | - | 2850-2851 | 2851 |
| 2 | 34 | 2852 | 2852-2853 | - | 2854-4413 | 1560 | - | 0 | - | - | 4414-4415 | 4415 |
| 3 | 36 | 4416 | 4416-4417 | - | 4418-6069 | 1652 | - | 0 | - | - | 6070-6071 | 6071 |
| 4 | 38 | 6072 | 6072-6073 | - | 6074-7817 | 1744 | - | 0 | - | - | 7818-7819 | 7819 |
| 5 | 40 | 7820 | 7820-7821 | - | 7822-9657 | 1836 | - | 0 | - | - | 9658-9659 | 9659 |
| 6 | 42 | 9660 | 9660-9661 | - | 9662-11589 | 1928 | - | 0 | - | - | 11690-11591 | 11691 |
| 7 | 44 | 11592 | 11592-11593 | - | 11594-13613 | 2020 | - | 0 | - | - | 13814-13815 | 13815 |
| 8 | 46 | 13616 | 13616-13617 | - | 13618-15729 | 2112 | - | 0 | - | - | 15730-15731 | 15731 |
| 9 | 48 | 15732 | 15732-15733 | - | 15734-17239 | 1506 | 17240-17932 | 693 | 17933-17934 | 17935-17937 | 17938-17939 | 17939 |
| Total | | | | | | 17199 | | 693 | | | | |

GRP10-ROM /PROM

| Band Number | Number of Sector/ Physical Track | Start Track | Buffer Tracks | DMA 1&2 Tracks | Data Tracks | Number of Data Track | Parity Tracks | Number of Parity Track | Buffer Tracks | DMA 3&4 Tracks | Buffer Tracks | End Track |
|---|---|---|---|---|---|---|---|---|---|---|---|---|
| 0 | 30 | 0 | 0-1 | 2-4 | 5-1324 | 1320 | 1325-1377 | 53 | - | - | 1378-1379 | 1379 |
| 1 | 32 | 1380 | 1380-1381 | - | 1382-2792 | 1411 | 2793-2849 | 57 | - | - | 2850-2851 | 2851 |
| 2 | 34 | 2852 | 2852-2853 | - | 2854-4353 | 1500 | 4354-4413 | 60 | - | - | 4414-4415 | 4415 |
| 3 | 36 | 4416 | 4416-4417 | - | 4418-6005 | 1588 | 6006-6069 | 64 | - | - | 6070-6071 | 6071 |
| 4 | 38 | 6072 | 6072-6073 | - | 6074-7749 | 1676 | 7750-7817 | 68 | - | - | 7818-7819 | 7819 |
| 5 | 40 | 7820 | 7820-7821 | - | 7822-9586 | 1765 | 9587-9657 | 71 | - | - | 9658-9659 | 9659 |
| 6 | 42 | 9660 | 9660-9661 | - | 9662-11514 | 1853 | 11515-11589 | 75 | - | - | 11590-11591 | 11591 |
| 7 | 44 | 11592 | 11592-11593 | - | 11594-13535 | 1942 | 13536-13613 | 78 | - | - | 13814-13815 | 13815 |
| 8 | 46 | 13616 | 13616-13617 | - | 13618-15647 | 2030 | 15648-15729 | 82 | - | - | 15730-15731 | 15731 |
| 9 | 48 | 15732 | 15732-15733 | - | 15734-17847 | 2114 | 17848-17932 | 85 | 17933-17934 | 17935-17937 | 17938-17939 | 17939 |
| Total | | | | | | 17199 | | 693 | | | | |

Copyright International Organization for Standardization
Provided by IHS under license with ISO
No reproduction or networking permitted without license from IHS

Not for Resale

# 19 Defect management

## 19.1 Rewritable groups: Spare sectors

Defective sectors in the Rewritable Zone shall be replaced by good sectors according to the defect management method described below. The disk shall be initialized before use. This International Standard allows initialization with or without certification. Defective sectors are handled by a Linear Replacement Algorithm and optionally, a sector Slipping Algorithm. The total number of defective sectors replaced by both algorithms shall not be greater than 1025. If 10 groups are used, the 41 (= 1025 / 25) spare sector tracks are distributed among groups proportionally to the number of data tracks in each group as shown in table 9.

### 19.1.1 Initialization of the disk

During initialization of the disk, the four DMAs are recorded prior to the first use of the disk. The Rewritable Zone shall be partitioned into 1 or 10 groups if the disk is fully rewritable. If the disk is partially embossed, the number of groups shall be 10. Each rewritable group shall contain a number of full tracks for data sectors followed by a number of full tracks for spare sectors. The spare sectors can be used as replacements for defective data sectors. Initialization can include a certification of the rewritable groups whereby defective sectors are identified and skipped.

All DDS parameters shall be recorded in the four DDS sectors. The PDL and SDL shall be recorded in the four DMAs. The requirements for the recording of the PDLs and SDLs are stated in tables 10 and 11.

### 19.1.2 Certification

If the disk is certified, the certification shall be applied to the data sectors and to the spare sectors in the groups. The method of certification is not stated by this International Standard. It may involve erasing, writing, and reading the sectors in the groups. Defective sectors found during certification shall be handled by the Slipping Algorithm or, where applicable, by the Linear Replacement Algorithm. Defective sectors shall not be used for reading or writing. Guidelines for replacing defective sectors are given in annex G.

#### 19.1.2.1 Slipping Algorithm

The Slipping Algorithm shall be applied individually to each and every group in the Rewritable Zone in case of certification is performed.

A defective data sector found during certification shall be replaced by the first good sector following the defective sector, and so causes a slip of one sector towards the end of the group. The last data sectors will slip into the spare sector area of the group. The address of the defective sector is written in the PDL. If no defective sectors are found during certification, an empty PDL is recorded.

The addresses of spare sectors, beyond the last data sector slipped into the spare area (if any), which are found to be defective during certification shall be recorded in the PDL. Thus, the number of available spare sectors is diminished accordingly.

If the spare sector area of a group becomes exhausted during certification, the defective sector shall be handled by the Linear Replacement Algorithm. This process involves assigning a replacement sector from the spare sector area of another group and cannot be accomplished until the other group has been certified. This is due to the fact that the next available spare sector is not known until its group is certified, i.e. the Slipping Algorithm has been applied.

#### 19.1.2.2 Linear Replacement Algorithm

The Linear Replacement Algorithm is used to handle defective sectors found after certification. It is also used during certification in the event of the spare area of a group becoming exhausted.

The defective sector shall be replaced by the first available good spare sector of the group. If there are no spare sectors left in the group, the defective sector shall be replaced by the first good spare sector of another group. The addresses of the defective sector and of the replacement sector shall be recorded in the SDL.

The addresses of sectors already recorded in the PDL shall not be recorded in the SDL.

If a replacement sector listed in the SDL is later found to be defective, it shall be dealt with by making a new entry in the SDL indicating a replacement sector for that defective sector.

### 19.1.3 Disks not certified

The Linear Replacement Algorithm is also used to handle sectors found defective on disks which have not been certified.



Copyright International Organization for Standardization
Provided by IHS under license with ISO
No reproduction or networking permitted without license from IHS Not for Resale

A defective sector shall be replaced by the first available good spare sector of the group. If there are no spare sectors left in the group, the defective sector shall be replaced by the first good spare sector of another group. The addresses of the defective sector and of the replacement sector shall be recorded in the SDL.

If there exists a list of addresses of the defective sectors in the PDL, these sectors shall be skipped for use even if the disks are not certified. This process is same as the process specified in 19.1.2.1 for the certified disks.

### 19.1.4 Write procedure

When writing data in the sectors of a group, a defective sector listed in the PDL shall be skipped, and the data shall be written in the next data sector, according to the Slipping Algorithm. If a sector to be written is listed in the SDL, the data shall be written in the spare sector pointed to by the SDL, according to the Linear Replacement Algorithm.

### 19.1.5 Primary Defect List (PDL)

A PDL shall always be recorded; it may be empty.

(Note - The disk formatted conforming to ISO/IEC 10090 may not have a PDL.)

A list of defective sectors may be obtained by means other than certification of the disk.

The PDL shall contain the addresses of all defective sectors identified at initialization. The addresses shall be listed in ascending order. The PDL shall be recorded in the minimum number of sectors necessary, and it shall begin in the first user data byte of the first sector. All unused bytes of the last sector of the PDL shall be set to (FF). The information in table 10 shall be recorded in each PDL.

In the case of multiple-sector PDL, the list of addresses of the defective sectors shall continue with the first byte of the second and subsequent sectors. Thus, the PDL Identifier and the Number of Addresses of the PDL shall be present only in the first sector.

In an empty PDL bytes 2 and 3 shall be set to (00) and bytes 4 to 511 shall be set to (FF).

**Table 10 - Content of the PDL**

| Byte | PDL Content |
|---|---|
| 0 | (00), PDL Identifier |
| 1 | (01), PDL Identifier |
| 2 | Number of Addresses in the PDL, MSB |
| 3 | Number of Addresses in the PDL, LSB<br>(if bytes 2 and 3 are (00), byte 3 is the end of the PDL) |
| 4 | Address of the First Defective Sector (Track Number, MSB) |
| 5 | Address of the First Defective Sector (Track Number) |
| 6 | Address of the First Defective Sector (Track Number, LSB) |
| 7 | Address of the First Defective Sector (Sector Number) |
| | ... |
| *x*-3 | Address of the Last Defective Sector (Track Number, MSB) |
| *x*-2 | Address of the Last Defective Sector (Track Number) |
| *x*-1 | Address of the Last Defective Sector (Track Number, LSB) |
| *x* | Address of the Last Defective Sector (Sector Number) |

### 19.1.6 Secondary Defect List (SDL)

The Secondary Defect List (SDL) is created during initialization and used during and after certification. All disks with a Rewritable Zone shall have an SDL recorded during initialization.

The SDL shall contain entries in the form of addresses of defective data sectors and addresses of the spare sectors which replace them. Each entry in the SDL contains 8 bytes, viz. four each for the address of a defective sector and for the address of its replacement sector.

The list of addresses shall contain the addresses of the defective sectors and their replacement sectors. The addresses of the defective sectors shall be in ascending order.



Copyright International Organization for Standardization
Provided by IHS under license with ISO
No reproduction or networking permitted without license from IHS Not for Resale

The SDL shall be recorded in the minimum number of sector necessary, and it shall begin in the first user data byte of the first sector. All unused bytes of the last sectors of the SDL shall be set to (FF). The following information shall be recorded in each of the four SDLs.

The addresses of sectors already recorded in the PDL shall not be recorded in the SDL.

If a replacement sector listed in the SDL is later found to be defective, an new entry shall be made in the SDL indicating a replacement sector for that defective sector.

In the case of a multiple-sector SDL, the list of addresses of defective and of replacement sectors shall continue with the first byte of the second and subsequent sectors. Thus, the contents of bytes 0 to 15 in table 11 shall be present only in the first sector.

**Table 11 - Content of the SDL**

| Byte | SDL Content |
|---|---|
| 0 | (00), SDL Identifier |
| 1 | (02), SDL Identifier |
| 2 | (00) |
| 3 | (01) |
| 4 | List Length in bytes in the SDL, MSB |
| 5 | List Length in bytes in the SDL, LSB |
| 6-7 | (00) |
| 8 | (02) |
| 9 | (01) |
| 10-13 | (00) |
| 14 | Number of Entries in the SDL, MSB |
| 15 | Number of Entries in the SDL, LSB |
| | (each entry is 8 bytes long) |
| 16 | Address of the First Defective Sector (Track Number, MSB) |
| 17 | Address of the First Defective Sector (Track Number) |
| 18 | Address of the First Defective Sector (Track Number, LSB) |
| 19 | Address of the First Defective Sector (Sector Number) |
| 20 | Address of the First Replacement Sector (Track Number, MSB) |
| 21 | Address of the First Replacement Sector (Track Number) |
| 22 | Address of the First Replacement Sector (Track Number, LSB) |
| 23 | Address of the First Replacement Sector (Sector Number) |
| | ... |
| *y*-7 | Address of the Last Defective Sector (Track Number, MSB) |
| *y*-6 | Address of the Last Defective Sector (Track Number) |
| *y*-5 | Address of the Last Defective Sector (Track Number, LSB) |
| *y*-4 | Address of the Last Defective Sector (Sector Number) |
| *y*-3 | Address of the Last Replacement Sector (Track Number, MSB) |
| *y*-2 | Address of the Last Replacement Sector (Track Number) |
| *y*-1 | Address of the Last Replacement Sector (Track Number, LSB) |
| *y* | Address of the Last Replacement Sector (Sector Number) |

## 19.2 Embossed groups: Parity sectors

The embossed parity sectors provide an error correction system for embossed data over the user data bytes and bytes 513 to 516 of each sector in addition to the ECC over the Data field and the control bytes of each sector. They allow the drive to correct one sector on a track that cannot be corrected by the ECC, assuring a high data integrity. If more than one sector on a track cannot be corrected by ECC, then it is not possible to recover any of these defective sectors by the use of parity sectors.

The Data field of a parity sector contains 516 parity bytes (PB), calculated as an Exclusive OR ($\oplus$) over the user data bytes and bytes 513 to 516 (DB), of the data sectors on one track of the group.



Copyright International Organization for Standardization
Provided by IHS under license with ISO
No reproduction or networking permitted without license from IHS Not for Resale

The algorithm shall be

$PB_{T,n} = DB_{t,0,n} \oplus DB_{t,l,n} \oplus ... DB_{t,j,n} \oplus ... \oplus DB_{t,24,n}$

where

$1 \leq t \leq n_2/25$

($n_2$ is number of embossed data sectors in the group)

$0 \leq j \leq 24$

$1 \leq n \leq 516$

$PB_{T,n}$ is byte $A_n$ of parity sector $T$, and $DB_{t,j,n}$ is byte $A_n$ of sector $j$ on track $t$ of the group. $A_n$ is defined in annex E. The parity bytes are calculated over the User data bytes and bytes 513 to 516, excluding the Resync bytes. The CRC, ECC, and Resync bytes as defined in annex E shall be required with each parity sector.

The parity sectors for each track of the group shall be stored consecutively in the sectors allocated to them in each group, staring with the first sector. The first parity sector of a group is associated with the first track with the data sectors of the same group, the second parity sector is associated with the second track with the data sectors, and so on until all tracks with the data sectors have an associated parity sector. The contents of the Data field of the unused parity sectors shall be set to (FF) and shall contain data complying with the layout as given in table E.1.

The Buffer tracks in the Data Zone shall not have associated parity sectors.

Copyright International Organization for Standardization
Provided by IHS under license with ISO
No reproduction or networking permitted without license from IHS
Not for Resale

# Section 4 : Characteristics of embossed information

## 20 Method of testing

The format of the embossed information on the disk is defined in clauses 13 to 18. Clauses 21 to 23 specify the requirements for the signals from grooves, Headers and embossed data, as obtained when using the Reference Drives defined in clause 9.

Clauses 21 to 23 specify only the average quality of the embossed information. Local deviations from the specified values, called defects, can cause tracking errors, erroneous Headers or errors in the Data fields. These errors are covered by section 6.

### 20.1 Environment

All signals in clauses 21 to 23 shall be within their specified ranges with the cartridge in any environment in the range of allowed operating environments defined in 8.1.2.

### 20.2 Use of the Reference Drive

All signals specified in clauses 21 to 23 shall be measured in the indicated channels of the Reference Drive. The drive shall have the following characteristics for the purpose of these tests.

#### 20.2.1 Optics and mechanics

The focussed optical beam shall have the properties defined in 9.2 a) to f). The disk shall rotate as specified in 9.5.

#### 20.2.2 Read power

For the wavelength 780 nm, the optical power incident on the entrance surface of the disk (used for reading the information) shall be in the range from 1,0 mW to $P_{max}$.

$P_{max}$ shall be in the range

$$1{,}2 \text{ mW} \leq P_{max} \leq 1{,}3 \text{ mW}$$

$P_{max}$ shall be specified in bytes 21 and 135 of the Control Zone.

For other wavelengths the values for this range are not specified by this International Standard.

Note - The recommended values for $P_{max}$ at other rotational frequencies are given in annex J.

#### 20.2.3 Read channels

The drive shall have a read channel, in which the total amount of light in the exit pupil of the objective lens is measured. This channel can have the implementation as given by Channel 1 in 9.1.

#### 20.2.4 Tracking

During the measurement of the signals, the axial tracking error between the focus of the optical beam and recording layer shall not exceed

$$e_{max}(\text{axial}) = 0{,}8 \ \mu\text{m}$$

and the radial tracking error between the focus of the optical beam and the centre of a track shall not exceed

$$e_{max}(\text{radial}) = 0{,}09 \ \mu\text{m}$$

The radial tracking servo used for this measurement requires a higher performance than that specified in 11.4.8.

### 20.3 Definition of signals

All signals are linearly related to currents through a photo-diode detector, and are therefore linearly related to the optical power falling on the detector.

The signals from the two halves of the split photo-diode detector in the tracking channel are indicated by $I_1$ and $I_2$. The signals in the tracking channel are referenced to the signal $(I_1 + I_2)_{OL}$,which is the maximum level of the sum of the signals in the information zone when the beam crosses the tracks without embossed mark.

The signals in Channel 1 are referenced to the signal $I_{OL}$, which is the signal in Channel 1 from an unrecorded, grooved area in the Information Zone.



Copyright International Organization for Standardization
Provided by IHS under license with ISO
No reproduction or networking permitted without license from IHS Not for Resale

Figure 17 shows the signals specified in clauses 21, 22 and 23.

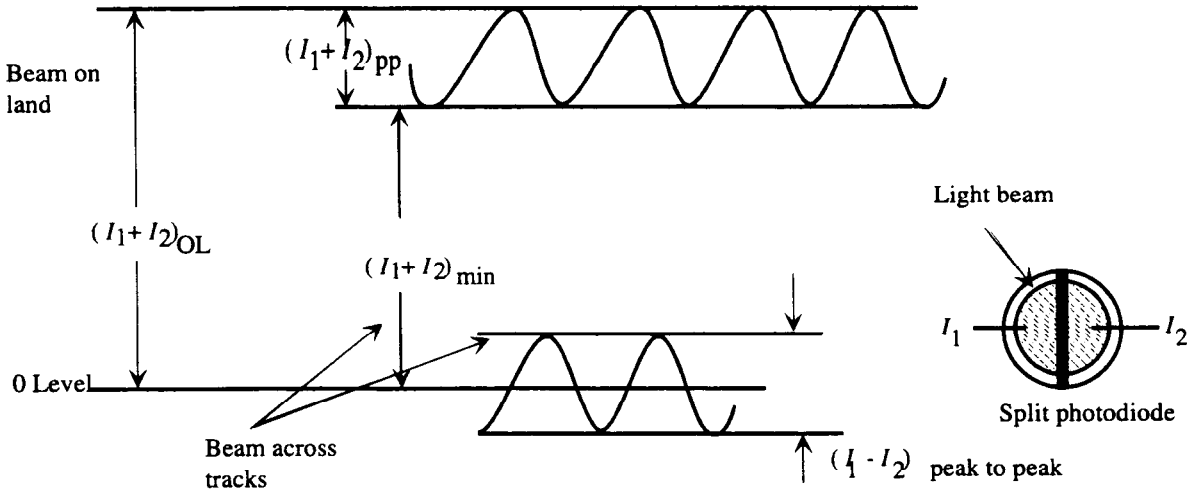


Signals from grooves in the tracking channel

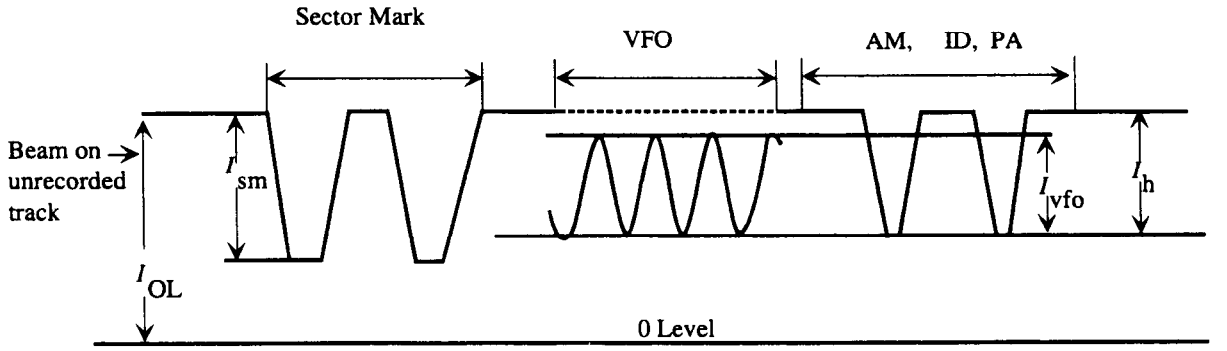


Signals from Headers in Channel 1

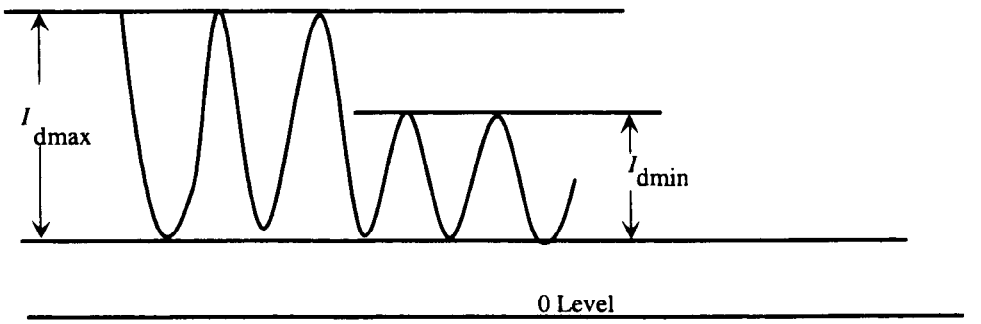


Signals from Recording fields in Channel 1

ECMA-94-0080-A

**Figure 17 - Signals from embossed areas**

Copyright International Organization for Standardization
Provided by IHS under license with ISO
No reproduction or networking permitted without license from IHS
Not for Resale

## 21 Signals from grooves

The signals $(I_1 + I_2)$ and $(I_1 - I_2)$ shall be filtered in order that frequencies above 1 MHz are attenuated by least 40 dB thereby eliminating the effect of modulation due to embossed marks. This condition shall not be applied to the measurement of the signal $(I_1 + I_2)_{OL}$.

The shape of the grooves and the embossed information shall be such that the following requirements for parallel and perpendicular polarization are met (see annex R).

### 21.1 Cross-track signal

The cross-track signal is the sinusoidal sum signal $(I_1 + I_2)$ in the tracking channel, when the focus of the optical beam crosses the tracks. The signal can be used by the drive to locate the centre of the tracks. The peak-to-peak value of the cross-track signal shall meet the following requirements:

a) in areas containing embossed Headers and embossed Recording fields:

Parallel polarization

$$0{,}12 \le \frac{(I_1 + I_2)_{pp}}{(I_1 + I_2)_{OL}} \le 0{,}60$$

Perpendicular polarization

$$0{,}20 \le \frac{(I_1 + I_2)_{pp}}{(I_1 + I_2)_{OL}} \le 0{,}75$$

b) in grooved areas in the Information Zone without embossed Recording fields:

Parallel polarization

$$0{,}23 \le \frac{(I_1 + I_2)_{pp}}{(I_1 + I_2)_{OL}} \le 0{,}65$$

Perpendicular polarization

$$0{,}30 \le \frac{(I_1 + I_2)_{pp}}{(I_1 + I_2)_{OL}} \le 0{,}75$$

The uniformity of the cross-track signal shall be such that the above ratio shall not vary by more than 15•% over any grooved area in the Information Zone without embossed Recording fields.

### 21.2 Cross-Track minimum signal

The cross-track minimum signal is the minimum of the sum signal $(I_1 + I_2)_{min}$ in the tracking channel, when the optical beam crosses the tracks.

The cross-track minimum signal shall meet the following requirements:

a) in grooved areas with embossed data in the Information Zone:

Parallel polarization

$$\frac{(I_1 + I_2)_{min}}{(I_1 + I_2)_{OL}} > 0{,}30$$

Perpendicular polarization

$$\frac{(I_1 + I_2)_{min}}{(I_1 + I_2)_{OL}} \ge 0{,}21$$

b) in grooved areas in the Information Zone without embossed Recording fields:

$$\frac{(I_1 + I_2)_{min}}{(I_1 + I_2)_{OL}} > 0{,}30 \qquad \frac{(I_1 + I_2)_{min}}{(I_1 + I_2)_{OL}} \ge 0{,}21$$

in grooved areas in the Information Zone with or without embossed data.

### 21.3 Push-pull signal

The push-pull signal is the sinusoidal difference signal $(I_1 - I_2)$ in the tracking channel, when the focus of the optical beam crosses the tracks. The signal can be used by the drive for radial tracking. The peak-to-peak value of the push-pull signal shall meet the following requirements:



Copyright International Organization for Standardization
Provided by IHS under license with ISO
No reproduction or networking permitted without license from IHS Not for Resale

a) in grooved areas with embossed data in the Information Zone:

Parallel polarization

$$0{,}35 \le \frac{(I_1 - I_2)_{pp}}{(I_1 + I_2)_{OL}} \le 0{,}90$$

Perpendicular polarization

$$0{,}22 \le \frac{(I_1 - I_2)_{pp}}{(I_1 + I_2)_{OL}} \le 0{,}70$$

b) in grooved areas in the Information Zone without embossed Recording fields:

Parallel polarization

$$0{,}55 \le \frac{(I_1 - I_2)_{pp}}{(I_1 + I_2)_{OL}} \le 0{,}90$$

Perpendicular polarization

$$0{,}35 \le \frac{(I_1 - I_2)_{pp}}{(I_1 + I_2)_{OL}} \le 0{,}70$$

## 21.4 Divided push-pull signal

The first term of the divided push-pull signal is the peak-to-peak amplitude derived from the instantaneous level of the differential output ($I_1$ - $I_2$) from the split photodiode detector when the light beam crosses the unrecorded or preformatted data area of grooved tracks divided by the instantaneous level of the sum output ($I_1$ + $I_2$) from the split photodiode detector when the light beam crosses these areas.

The second term of the divided push-pull signal is the ratio of the minimum peak-to-peak amplitude derived from the instantaneous level of the differential output ($I_1$ - $I_2$) divided by the instantaneous level of the sum output ($I_1$ + $I_2$) from the split photodiode detector when the light beam crosses the preformatted data area of grooved tracks to the maximum peak-to-peak amplitude derived from the instantaneous level of the differential output ($I_1$ - $I_2$) divided by the instantaneous level of the sum output ($I_1$ + $I_2$) from the split photodiode detector when the light beam crosses the preformatted data area of grooved tracks.

The split photodiode detector separator shall be parallel to the projected track axis. In this measurement, the $I_1$ and $I_2$ signals shall be provided by the split photodiode detector. The tracking servo shall be operating in open-loop mode during this measurement.

The first term shall meet the following requirements:

a) in grooved areas with embossed data in the Information Zone:

Parallel polarization

$$0{,}74 \le \left[\frac{(I_1 - I_2)}{(I_1 + I_2)}\right]_{pp} \le 1{,}10$$

Perpendicular polarization

$$0{,}45 \le \left[\frac{(I_1 - I_2)}{(I_1 + I_2)}\right]_{pp} \le 1{,}00$$

b) in grooved areas in the Information Zone without embossed Recording fields:

Parallel polarization

$$0{,}74 \le \left[\frac{(I_1 - I_2)}{(I_1 + I_2)}\right]_{pp} \le 1{,}10$$

Perpendicular polarization

$$0{,}65 \le \left[\frac{(I_1 - I_2)}{(I_1 + I_2)}\right]_{pp} \le 1{,}00$$

The second term shall satisfy:

Parallel polarization

$$\frac{\left[\frac{(I_1 - I_2)}{(I_1 + I_2)}\right]_{pp_{min}}}{\left[\frac{(I_1 - I_2)}{(I_1 + I_2)}\right]_{pp_{max}}} \ge 0{,}7$$

Perpendicular polarization

$$\frac{\left[\frac{(I_1 - I_2)}{(I_1 + I_2)}\right]_{pp_{min}}}{\left[\frac{(I_1 - I_2)}{(I_1 + I_2)}\right]_{pp_{max}}} \ge 0{,}7$$



Copyright International Organization for Standardization
Provided by IHS under license with ISO
No reproduction or networking permitted without license from IHS Not for Resale

### 21.5 Phase depth

The phase depth of the grooves shall be less than 180°.

### 21.6 Track location

The tracks are located at those radii on the disk where the push-pull signal equals 0 and the cross-track signal has its maximum value.

## 22 Signals from Headers

The signals obtained from the embossed Headers shall be measured in Channel 1 of the Reference Drive.

The signal from an embossed mark in the recording layer is defined as the peak-to-peak value of the modulation of the signal in Channel 1 caused by the mark when the beam follows a recorded track (see annex R).

The level of all signals from embossed marks shall be lower than $I_{OL}$.

### 22.1 Sector Mark

The signal $I_{sm}$ from the Sector Mark shall meet the following requirements:

$$I_{sm} / I_{OL} \geq 0{,}55$$

### 22.2 $VFO_1$ and $VFO_2$

The signal $I_{vfo}$ from the marks in the $VFO_1$ and $VFO_2$ fields shall meet the following requirements:

$$I_{vfo} / I_{OL} \geq 0{,}15$$

In addition the condition

$$I_{vfo} / I_{hmax} \geq 0{,}35$$

shall be satisfied within each Header, where $I_{hmax}$ is the maximum signal from marks of that Header in the fields defined in 22.3.

### 22.3 Address Mark, ID field and Postamble

The signal $I_h$ from marks in the Address Mark, ID and Postamble fields shall meet the following requirements:

$$I_h / I_{OL} \geq 0{,}15$$

$$I_{hmin} / I_{hmax} \geq 0{,}35$$

The last requirement applies over any Header. $I_{hmin}$ and $I_{hmax}$ are the signals with minimum and maximum amplitude in those fields of a sector mentioned above.

## 23 Signals from embossed Recording fields

If the disk has an embossed zone, the Recording field of all sectors in this zone shall contain embossed marks. The signals from these marks shall be measured in Channel 1 (see 9.1 and annex R). Acceptable defects of the marks are specified in section 6. The signal from all embossed Recording fields is defined as the peak-to-peak value of the modulation of the signal.

The signal $I_d$ from marks in the Recording fields of the embossed zone shall meet the following requirements:

$$I_d / I_{OL} \geq 0{,}15$$

$$I_{dmin} / I_{dmax} \geq 0{,}35$$

The last requirement applies over Recording fields. $I_{dmin}$ and $I_{dmax}$ are the signals with minimum and maximum amplitude in the Recording field of a sector.

For the focus tracks in the acquire zone, only $I_d / I_{OL}$ is defined.



Copyright International Organization for Standardization
Provided by IHS under license with ISO
No reproduction or networking permitted without license from IHS Not for Resale

# Section 5 : Characteristics of the recording layer

## 24 Method of testing

Clauses 25 to 27 describe a series of tests to assess the magneto-optical properties of the recording layer, as used for writing and erasing data. The tests shall be performed only in the Recording field of the sectors in the Rewritable Zone. If there is no Rewritable Zone for user recording, clauses 26 to 28 shall not apply. The write, read and erase operations necessary for the tests shall be made on the same Reference Drive (see also annex J).

Clauses 25 to 27 specify only the average quality of the recording layer. Local deviations from the specified values, called defects, can cause write or erase problems. These defects are covered by section 6.

### 24.1 Environment

All signals in clauses 25 to 27 shall be within their specified ranges with the cartridge in any environment in the range of allowed operating environments defined in 8.1.2.

### 24.2 Reference Drive

The write and erase tests described in clauses 25 to 27 shall be measured in Channel 2 of the Reference Drive. The drive shall have the following characteristics for the purpose of these tests.

#### 24.2.1 Optics and mechanics

The focussed optical beam shall have the properties defined in 9.2 a) to f). The disk shall rotate as specified in 9.5.

#### 24.2.2 Read power

The optical power incident on the entrance surface of the disk and used for reading the information shall be in the range from 1,0 mW to $P_{max}$.

#### 24.2.3 Read channel

The Reference Drive shall have a read channel which can detect magneto-optical marks in the recording layer. This channel shall have an implementation equivalent to that given by Channel 2 in 9.3.

#### 24.2.4 Tracking

During the measurement of the signals, the focus of the optical beam shall follow the tracks as specified in 20.2.4.

### 24.3 Write conditions

Marks are written on the disk by pulses of optical power superimposed on a bias power, in the presence of a magnetic field.

#### 24.3.1 Write pulse

The shape of the write pulse shall be as given in figure 18.



Copyright International Organization for Standardization
Provided by IHS under license with ISO
No reproduction or networking permitted without license from IHS Not for Resale

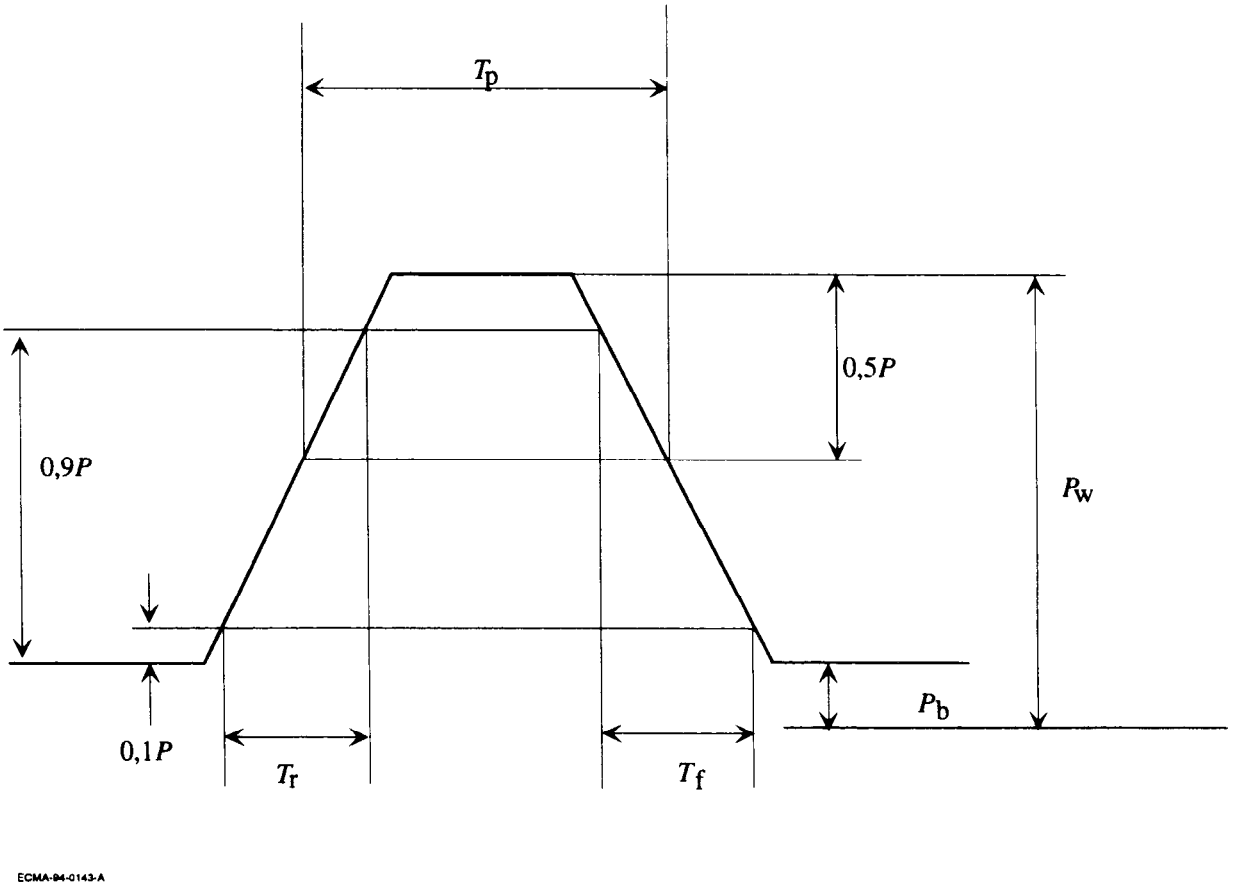


$P_w$ : write power $P_b$ : bias power

$T_r$ : rise time $T_f$ : fall time

$T_p$ : write pulse width $P$ : $P_w$ - $P_b$

**Figure 18 - Shape of write pulse**

The rise and fall times $T_r$ and $T_f$ shall each be less than (0,1 $T_p$ + 5) ns.

### 24.3.2 Write power and pulse width

The write power is the optical power incident on the entrance surface of the disk and used for writing marks.

The bias power $P_b$ shall be set between 0,9 mW and 1,1 mW.

The tests shall be carried out at a temperature of 23 °C ± 2 °C, at either

- one of the three constant pulse widths $T_p$ and a write power $P_w$ appropriate to the bands, as given in bytes 22 to 25 and 136 to 139 of the Control data (see annex F), or
- a constant pulse power $P_w$ given in bytes 31 and 145, and a pulse width appropriate to the bands given in bytes 32 to 34 and 146 to 148, respectively, of the Control data (see annex F).

For bands other than those specified the values shall be linearly interpolated. The actual power and pulse width used shall be within 5 % of those selected.

For other temperatures, the values should be compensated as shown in annex J, in which recommended maximum write powers for two optional rotational frequencies are also shown.

The required write power shall not exceed



Copyright International Organization for Standardization
Provided by IHS under license with ISO
No reproduction or networking permitted without license from IHS Not for Resale

$$50\left(\frac{1}{T_p}+\frac{1}{\sqrt{T_p}}\right)\text{mW} \quad \text{for } 10\text{ ns} \leq T_p \leq 50\text{ ns}$$

or

$$8\text{ mW} \quad \text{for } T_p > 50\text{ ns}.$$

$T_p$ is expressed in nanoseconds.

#### 24.3.3 Write magnetic field

The requirements of all tests shall be met for all magnetic field intensities at the recording layer during writing in the range from 16 000 A/m to 32 000 A/m.

The write magnetic field, pointing in the North to South direction, shall be within 15° from the normal to the disk reference plane P, in the direction of the incident beam, i.e. from the entrance surface to the recording layer.

### 24.4 Erase conditions

Marks are erased from the disk by a constant optical power in the presence of a magnetic field.

#### 24.4.1 Erase power

The erase power is the optical power incident on the entrance surface of the disk and used for erasing marks. The erase power shall not exceed the value calculated according to the formula in 24.3.2.

The tests shall be carried out at a temperature of 23 °C ± 2 °C and with an erase power appropriate to the radius, given in bytes 45 to 47 and 159 to 161 of the Control data (see annex F). For radii other than those specified the values shall be linearly interpolated. The actual power used shall be within ± 10 % of that selected.

For other temperatures the values should be compensated as shown in annex J, in which recommended maximum erase powers for two optional rotational frequencies are also shown.

#### 24.4.2 Erase magnetic field

The requirements of all tests shall be met for all magnetic field intensities at the recording layer during erasing in the range from 16 000 A/m to 32 000 A/m.

The erase magnetic field, pointing in the North to South direction, shall be within 15° from the normal to the disk reference plane P, in the direction of the reflected beam, i.e. from the recording layer to the entrance surface.

### 24.5 Definition of signals

The signals in Channel 2 are linearly related to the difference between the currents through the photo-diode detectors $K_1$ and $K_2$, and are therefore linearly related to the optical power falling on the detectors (see 9.1).

## 25 Magneto-optical characteristics

### 25.1 Figure of merit

The figure of merit $F$ of the recording layer is a measure of the magnitude of the signal obtained from magneto-optical marks. It is defined as $R \sin\theta \cos 2\beta$., where $R$ is the reflectance of the disk expressed as a decimal fraction, $\theta$ is the Kerr rotation of the optical polarization between a mark and no-mark, and $\beta$. is the ellipticity of the reflected beam, averaged over the aperture. The polarity of the figure of merit is defined to be negative for a magneto-optical mark written in an Fe-rich Fe-Tb alloy recording layer with the write magnetic field in the direction specified in 24.3.3. In this case the direction of the Kerr rotation is counter-clockwise as seen from the incident beam.

The polarity and magnitude of the value of the figure of merit shall be as specified in byte 10 and 11 of the Control data (see annex F). The figure of merit shall comply with

$$0{,}0025 < |F| < 0{,}0050$$

The measurement of the actual value $F_m$ shall be made according to annex H. This actual value $F_m$ shall be within 12 % of the nominal value.



Copyright International Organization for Standardization
Provided by IHS under license with ISO
No reproduction or networking permitted without license from IHS Not for Resale

## 25.2 Imbalance of the magneto-optical signal

The imbalance of the magneto-optical signal is the d.c. offset of the signal from Channel 2 of the Reference Drive, which can be due to birefringence of the substrate. The offset can be measured by writing marks on the disk in the low-frequency region where the modulation transfer function of the optical system is one, as in annex H. One can also use a series of marks that give a 50 % duty cycle read signal. The offset is now the signal level halfway between the extremes of the signal.

The imbalance shall be such that the offset in Channel 2 divided by the signal in Channel 1 shall not exceed 0,06 in the Recording field of any sector in the Rewritable Zone. The imbalance shall be measured in a bandwidth from d.c. to 40 kHz. The imbalance is specified for a Reference Drive with a beam splitter E with nominal values for the reflectances, the phase retarder shall be in the neutral position (see 9.1).

# 26 Write characteristics

## 26.1 Resolution

The resolution is the ratio of the signal amplitude from a high-density pattern of marks to the signal amplitude from a low-density pattern of marks. It shall be measured as follows.

Write two series of marks, one spaced eight Channel bits apart and one spaced three Channel bits apart, in the Recording field of a sector. The write conditions shall be as specified in 24.3.

Read the signals in Channel 2 under the conditions specified in 24.2.2 and 24.2.3. *IL* is the peak-to-peak value of the signal obtained from the widely spaced marks, *IH* is the peak-to-peak value of the signal obtained from the narrowly spaced marks.

The resolution *IH /IL* shall not be less than 0,3 within any sector in the Rewritable Zone for all allowed values of the write magnetic field. It shall not vary more than 0,2 over a track.

## 26.2 Narrow-band signal-to-noise ratio

The narrow-band signal-to-noise ratio is the ratio of the signal level to the noise level of a specified pattern, measured in a 30 kHz bandwidth. It shall be determined as follows.

Write a series of marks spaced three Channel bits apart in the Recording fields of a series of sectors. The write conditions shall be as specified in 24.3.

Read the Recording fields in Channel 2 under the conditions specified in 24.2.2 and 24.2.3, using a spectrum analyser with a bandwidth of 30 kHz. Measure the amplitudes of the signal obtained from narrowly spaced marks at the frequency appropriate to the band and the noise at this frequency as indicated in figure 19. The measurements shall be corrected for the effect of the Header fields, in order to obtain the value for the Recording field only. The narrow-band signal-to-noise ratio is

$$20 \log_{10}\left(\frac{\text{signal level}}{\text{noise level}}\right)$$

The narrow-band signal-to-noise ratio shall be greater than 43 dB in any sector in the Rewritable Zone for all allowed values of the write magnetic field and for all phase differences between -15° and +15° in the optical system as defined in 9.1.



Copyright International Organization for Standardization
Provided by IHS under license with ISO
No reproduction or networking permitted without license from IHS Not for Resale

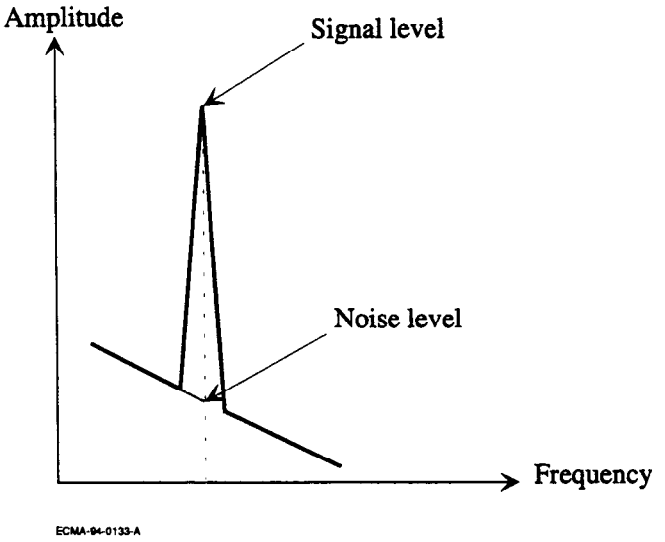


**Figure 19 - Spectrum analyser display**

### 26.3 Cross-talk

The test on cross-talk shall be carried out on any group of five adjacent unrecorded tracks, designated ($n$-2), ($n$-1), $n$, ($n$+1), ($n$+2), in the Rewritable Zone according to the following procedure:

- Erase the Recording field of each of the sectors in these tracks.
- Write a series of marks spaced eight Channel bits apart in the Recording fields of the sectors in track $n$. The write conditions shall be as specified in 24.3.
- Read the Recording fields of the sectors in the tracks ($n$-1), $n$ and ($n$+1) under the conditions specified in 24.2.2 and 24.2.3.

The cross-talk from a track $n$ to track ($n$-1) and to track ($n$+1) shall be lower than -26 dB.

## 27 Erase characteristics

Procedure:

a) Write a series of marks spaced three Channel bits apart in the Recording fields of any series of sectors in the Rewritable Zone. The write conditions shall be as specified in 24.3.

b) Read the Recording fields under the conditions specified in 24.2.2 and 24.2.3, using a spectrum analyser with a bandwidth of 30 kHz. Note the amplitude of the signal (as specified in 26.2).

c) Erase under the conditions specified in 24.4.

d) Repeat a) and c) 1 000 times.

e) Repeat a).

f) Repeat b); note the amplitude of the signal and the noise (as specified in 26.2).

g) Repeat c); note the amplitude of the residual signal of the written mark at the same frequency as in f).

Requirements:

1) The narrow-band signal-to-noise ratio calculated from the readings in f) shall be greater than 43 dB.

2) The residual signal in g) shall be less than -40 dB relative to the signal level of the written marks in b).



Copyright International Organization for Standardization
Provided by IHS under license with ISO
No reproduction or networking permitted without license from IHS
Not for Resale

# Section 6 : Characteristics of user data

## 28 Method of testing

Clauses 29 and 30 describe a series of measurements to test conformance of the user data on the disk with this International Standard. It checks the legibility of both embossed and user-written data. The data is assumed to be arbitrary. The user-written data may have been written by any drive in any environment. The read tests shall be performed on the Reference Drive.

Whereas clauses 20 to 27 disregard defects, clauses 29 and 30 include them as an unavoidable deterioration of the read signals. The gravity of a defect is determined by the correctability of the ensuing errors by the error detection and correction circuit in the read channel defined below. The requirements in clauses 29 and 30 define a minimum quality of the data, necessary for data interchange.

### 28.1 Environment

All signals in clauses 29 to 30 shall be within their specified ranges with the cartridge in any environment in the range of allowed operating environments defined in 8.1.2. It is recommended that before testing the entrance surface of the optical disk shall be cleaned according to the instructions of the manufacturer of the disk.

### 28.2 Reference Drive

All signals specified in clauses 29 to 30 shall be measured in the indicated channels of the Reference Drive. The drive shall have the following characteristics for the purpose of these tests:

#### 28.2.1 Optics and mechanics

The focussed optical beam shall have the properties already defined in 9.2 a) to f). The disk shall rotate as specified in 9.5.

#### 28.2.2 Read power

The optical power incident on the entrance surface of the disk (used for reading the information) shall be in the range from 1,0 mW to $P_{max}$.

#### 28.2.3 Read amplifiers

The read amplifiers after the photo-detectors in Channels 1 and 2 shall be as specified in 9.3.

#### 28.2.4 Analog-to-binary converters

The signals from both read amplifiers shall be converted from analog-to-binary with a peak detector.

The converter for Channel 1 shall operate correctly for analog signals from embossed marks with amplitudes as determined by clauses 22 and 23.

The converter for Channel 2 shall operate correctly for analog signals from user-written marks with an amplitude as determined by clauses 25 and 26.

#### 28.2.5 Error correction

Correction of errors in the data bytes shall be carried out by an error detection and correction system based on the definition in E.3 of annex E. There shall be an additional correction system for the embossed data, based on the Parity Sectors as defined in 18.4.3.

#### 28.2.6 Tracking

During measurement of the signals, the focus of the optical beam shall follow the tracks as specified in 20.2.4.

## 29 Minimum quality of a sector

This clause specifies the minimum quality of the Header and Recording field of a sector as required for interchange of the data contained in that sector. The quality shall be measured on the Reference Drive specified in 28.2.

A byte error occurs when one or more bits in a byte have a wrong setting, as detected by the ECC and/or CRC circuits.



Copyright International Organization for Standardization
Provided by IHS under license with ISO
No reproduction or networking permitted without license from IHS Not for Resale

### 29.1 Headers

#### 29.1.1 Sector Mark

At least three of the five long marks of the Sector Mark shall have the timing specified in 15.2 and the signals shall have the amplitude specified in 22.1.

#### 29.1.2 ID fields

At least one of the three ID fields in a Header read in Channel 1 shall not have any byte errors, as checked by the CRC in the field.

### 29.2 User-written data

The user-written data in a sector as read in Channel 2 shall not contain any byte errors that cannot be corrected by the error correction defined in 28.2.5.

### 29.3 Embossed data

The embossed data in a sector as read in Channel 1 shall not contain any byte errors that cannot be corrected by the error correction defined in 28.2.5.

## 30 Data interchange requirements

A disk offered for interchange of data shall comply with the following requirements.

### 30.1 Tracking

The focus of the optical beam shall not jump tracks unintentionally.

### 30.2 User-written data

Any sector written in the Rewritable Zone that does not comply with 29.1 and 29.2 shall have been replaced according to the rules of the defect management as defined in clause 19.

### 30.3 Embossed data

Any sector in the Embossed Zone that does not comply with 29.1 and 29.3 shall be correctable by the error correction based on the Parity Sectors as defined in 18.4.3.

### 30.4 Quality of disk

The quality of the disk is reflected in the number of replaced sectors in the Rewritable Zone. This International Standard allows a maximum of 1 025 replaced sectors.



Copyright International Organization for Standardization
Provided by IHS under license with ISO
No reproduction or networking permitted without license from IHS Not for Resale

# Annex A

**(normative)**

## Edge distortion test

**A.1** The distortion test checks if the case is free from unacceptable distortions and protrusions along its edges. The test is made by causing the cartridge to pass through the vertical slot of a gauge while applying a specified force including the gravitational pull.

**A.2** The gauge shall be made of a suitable material, e.g. of chrome-plated carbon steel. The inner surfaces shall be polished to a surface finish of 5 µm peak-to-peak.

**A.3** The dimensions shall be as follows (see figure A.1):

$L_a$ = 96,0 mm min.

$L_b$ = 91,0 mm ± 0,1 mm

$L_c$ = 8,6 $^{+0,1\ mm}_{-0,0\ mm}$

$L_d$ = 6,30 mm ± 0,01 mm

$L_e$ = 6,80 mm min.

**A.4** When the cartridge is inserted vertically into the gauge, a vertical downward force $F_i$ of 0,8 N maximum applied to the centre of the top edge of the cartridge shall cause the cartridge to pass through the gauge.

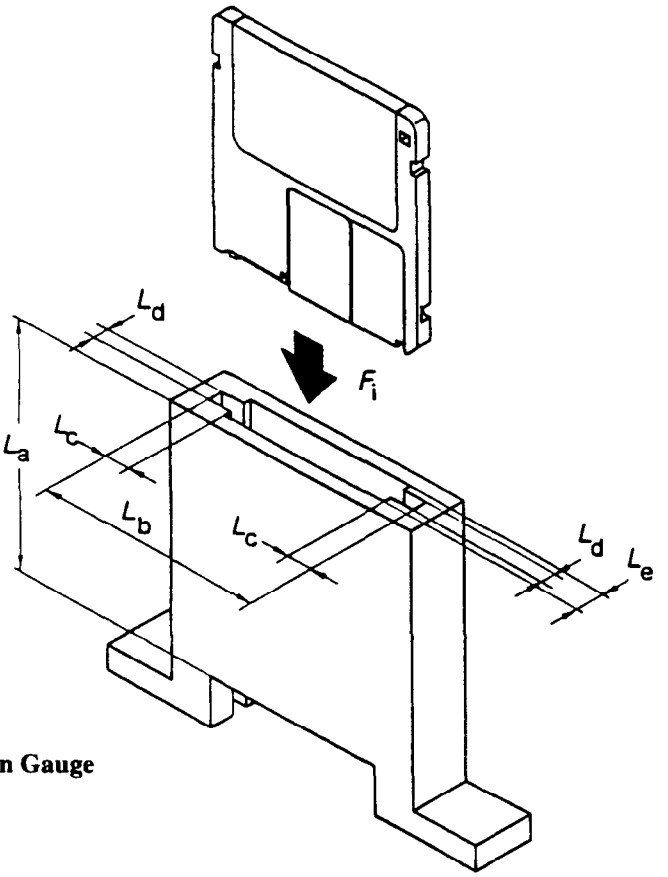


**Figure A.1 - Distortion Gauge**



Copyright International Organization for Standardization
Provided by IHS under license with ISO
No reproduction or networking permitted without license from IHS
Not for Resale

# Annex B

**(normative)**

## Compliance test

**B.1** The compliance test checks the flatness and flexibility of the case by forcing the four reference surfaces of the case into a plane. The test is made by placing the cartridge on the supports of a gauge and applying forces on the cartridge opposite to the supports.

**B.2** The location of the four reference surfaces S1, S2, S3 and S4 is defined in 10.3.4 and figure 4.

**B.3** The test gauge consists of a base plate on which four posts P1, P2, P3 and P4 are fixed so as to correspond to the four surfaces S1, S2, S3 and S4, respectively (see figure B.1). The dimensions are as follows (see figure B.2):

**Posts P1 and P2**

$D_a = 6{,}50$ mm ± 0,01 mm

$D_b = 3{,}50 \begin{matrix} +0{,}00 \text{ mm} \\ -0{,}02 \text{ mm} \end{matrix}$

$H_a = 1{,}0 \pm 0{,}1$ mm

$H_b = 2{,}0$ mm max.

**Posts P3 and P4**

$D_c = 5{,}50$ mm ± 0,01 mm.

The top area ($H_b$ - $H_a$) of posts P1 and P2 has a chamfer.

After assembly, the upper annular surfaces of the four posts shall lie between two horizontal planes spaced 0,01 mm apart.

**B.4** The cartridge shall be placed with its reference surfaces onto the posts of the horizontal gauge. A vertical downward force $F_c$ of 0,4 N shall be exerted on the cartridge opposite each of the four posts.

**B.5 Requirements**

Under the conditions of B.4, three of the four surfaces S1 to S4 shall be in contact with the annular surface of their respective posts, and any gap between the remaining surface S and the annular surface of its post shall not exceed 0,1 mm.



Copyright International Organization for Standardization
Provided by IHS under license with ISO
No reproduction or networking permitted without license from IHS Not for Resale

©ISO/IEC

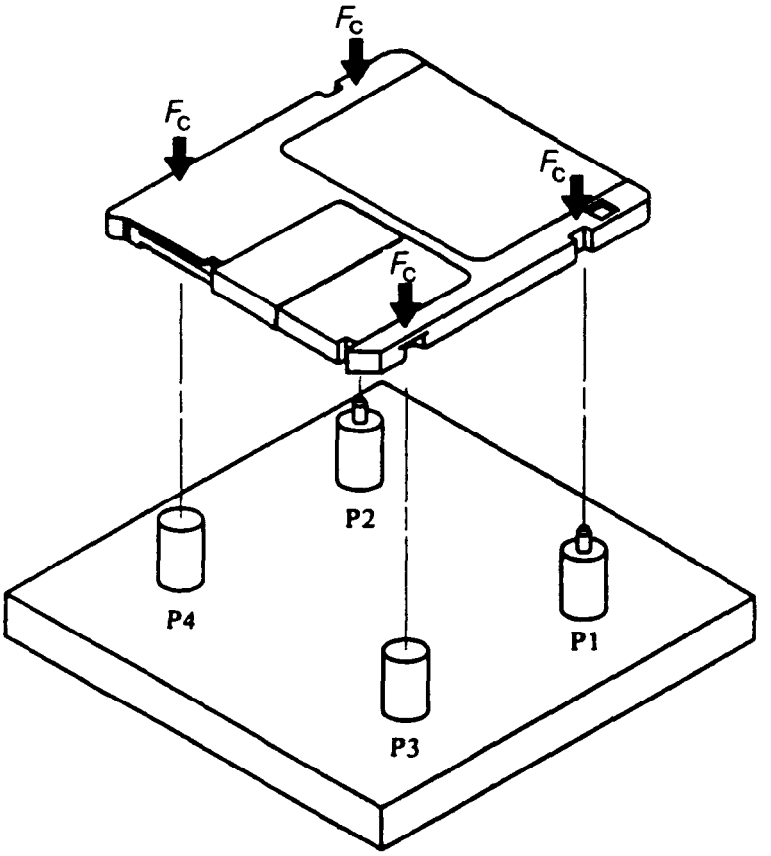


**Figure B.1 - Compliance gauge**

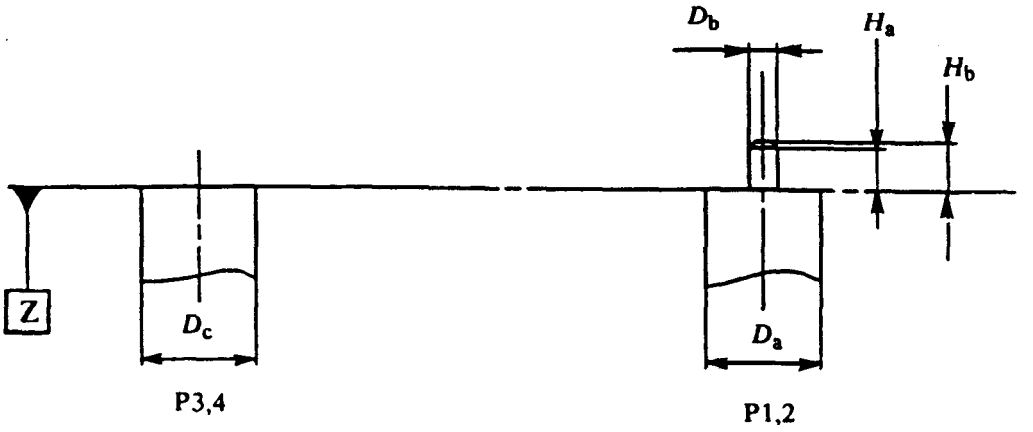


**Figure B.2 - Detail of posts**



Copyright International Organization for Standardization
Provided by IHS under license with ISO
No reproduction or networking permitted without license from IHS
Not for Resale

# Annex C

**(informative)**

## Track deviation measurement

The deviation of a track from its nominal location is measured in the same way as a drive sees a track, i.e. through a tracking servo. The strength of the reference servo used for the test is in general less than the strength of the same servo in a normal drive. The difference in strength is intended for margins in the drive. The deviation of the track is related to the tracking error between the track and the focus of the optical beam, remaining after the reference servo. The tracking error directly influences the performance of the drive, and is the best criterion for testing track deviations.

The specification of the axial and radial track deviations can be described in the same terms. Therefore, this annex applies to both axial and radial track deviations.

## C.1 Relation between requirements

The acceleration required by the motor of the tracking servo to make the focus of the optical beam follow the tracks on the disk (see 11.4.6 and 11.4.8) is a measure for the allowed deviations of the tracks. An additional measure is the allowed tracking error between the focus and the track (see 20.2.4). The relation between both is given in figure C.1, where the maximum allowed amplitude of a sinusoidal track deviation is given as function of the frequency of the deviation. It is assumed in the figure that there is only one sinusoidal deviation present at a time.

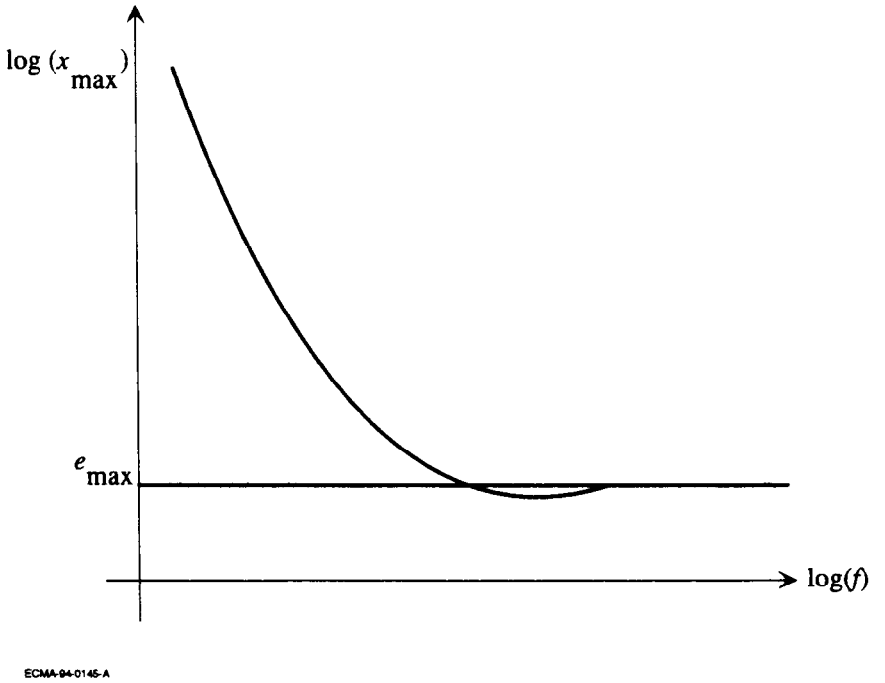


**Figure C.1 - Maximum allowed amplitude of a single, sinusoidal track deviation**

At low frequencies, the maximum allowed amplitude $x_{max}$ is given by

$$x_{max} = a_{max} / (2\pi f)^2, \quad (1)$$

where $a_{max}$ is the maximum acceleration of the servo motor. At high frequencies we have

$$x_{max} = e_{max} \quad (2)$$

where $e_{max}$ is the maximum allowed tracking error. The connection between both frequency regions is given in C.3.



Copyright International Organization for Standardization
Provided by IHS under license with ISO
No reproduction or networking permitted without license from IHS
Not for Resale

## C.2 Reference Servo

The above restriction of the track deviations is equal to the restriction of the track deviations for a Reference Servo. A Reference Servo has a well-defined transfer function, and reduces a single, sinusoidal track deviation with amplitude $x_{max}$ to a tracking error $e_{max}$ as in figure C.1.

The open-loop transfer function of the Reference Servo shall be

$$H_s(i\omega) = \frac{1}{c} \times \left( \frac{\omega_0}{i\omega} \right)^2 \times \frac{1 + \frac{i\omega c}{\omega_0}}{1 + \frac{i\omega}{c\omega_0}} \qquad (3)$$

where $i = \sqrt{-1}$, $\omega = 2\pi f$ and $\omega_0 = 2\pi f_0$, with $f_0$ the 0 dB frequency of the open-loop transfer function. The constant c gives the cross-over frequencies of the lead-lag network of the servo: the lead break frequency $f_1 = f_0 / c$ and the lag break frequency $f_2 = f_0 \times c$. The reduction of a track deviation $x$ to a tracking error e by the reference servo is given by

$$\frac{e}{x} = \frac{1}{1 + H_s} \qquad (4)$$

If the 0 dB frequency is specified as

$$\omega_0 = \sqrt{\frac{a_{max} c}{e_{max}}} \qquad (5)$$

then a low-frequency track deviation with an acceleration $a_{max}$ will be reduced to a tracking error $e_{max}$, and a high-frequency track deviation will not be reduced. The curve in figure C.1 is given by

$$x_{max} = e_{max} \, | \, 1 + H_s \, | \qquad (6)$$

The maximum acceleration required from the motor of this reference servo is

$$a_{max}(\text{motor}) = e_{max} \, \omega^2 \, | \, 1 + H_s \, | \qquad (7)$$

At low frequencies ($f < f_0 / c$) applies

$$a_{max}(\text{motor}) = a_{max}(\text{track}) = \frac{\omega_0^2 e_{max}}{c} \qquad (8)$$

Hence, it is permitted to use $a_{max}$(motor) as specified for low frequencies in 11.4.6 and 11.4.8 for the calculation of $\omega_0$ of a reference servo.

## C.3 Requirement for track deviations

The track deviations shall be such that, when tracking with a Reference Servo on a disk rotating at the specified frequency, the tracking error shall not be larger than $e_{max}$ during more than 12 µs.

The open-loop transfer function of the Reference Servo for axial and radial tracking shall be given by equation (3) within an accuracy such that $|1 + H|$ does not differ by more than ± 20 % from its nominal value in a bandwidth from 30 Hz to 100 kHz. The constant c shall be 3. The 0 dB frequency $\omega_0 / (2\pi)$ shall be given by equation (5), where $a_{max}$ and $e_{max}$ for axial and radial tracking are specified in 20.2.4, 11.4.6 and 11.4.8.

## C.4 Measurement implementation

Three possible implementations for an axial or radial measurement system have been given below. $H_a$ is the open-loop transfer function of the actual tracking servo of the drive, $H_s$ is the transfer function for the Reference Servo as given in equation (3). $x$ and $y$ are the position of the track and the focus of the optical beam. $e_s$ is the tracking error after a Reference Servo, which signal has to be checked according to the previous paragraph.



Copyright International Organization for Standardization
Provided by IHS under license with ISO
No reproduction or networking permitted without license from IHS Not for Resale

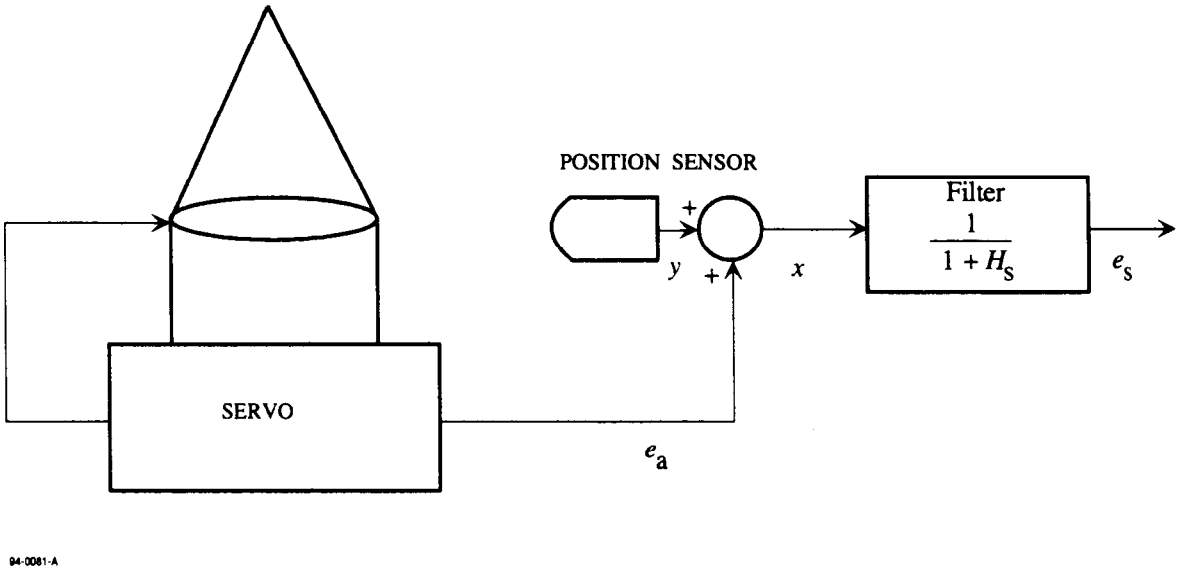


**Figure C.2 - Implementation of a Reference Servo by filtering the track position signal with the reduction characteristics of the Reference Servo**

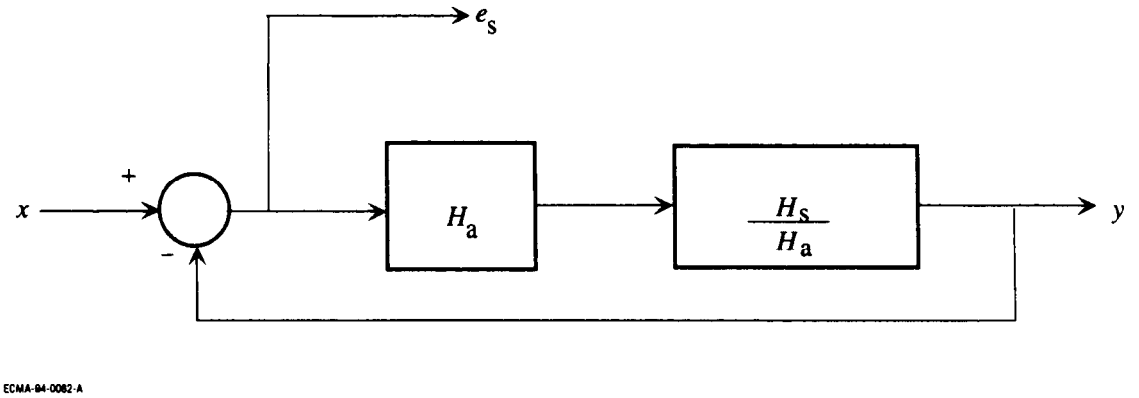


**Figure C.3 - Implementation of a Reference Servo by changing the transfer function of the actual servo**

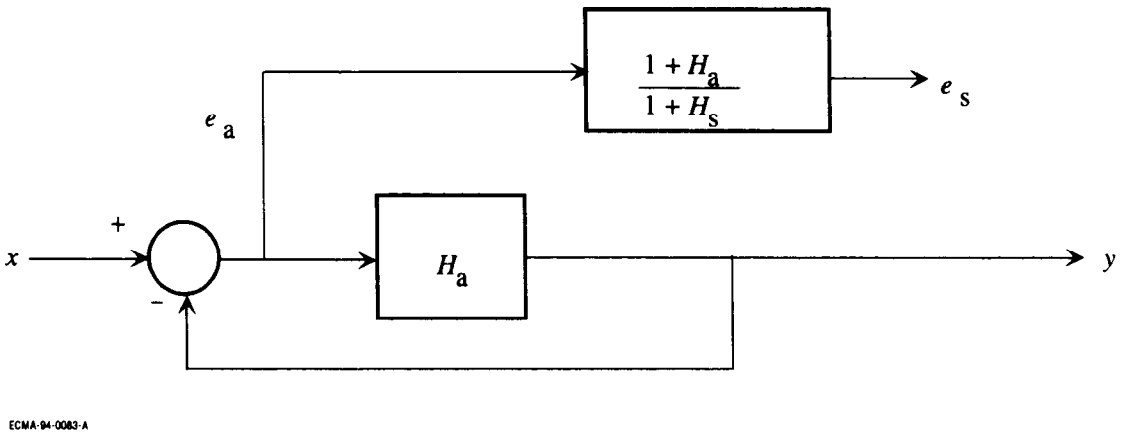


**Figure C.4 - Implementation of a Reference Servo by changing the tracking error of the actual servo**

The optimum implementation depends on the characteristics of $H_a$ and $H_s$. Good results for motors in leaf springs are often obtained by using separate circuits in a low and high frequency channel. The implementation of figure C.2 is used in the low-frequency channel, while that of figures C.3 or C.4 is used in the high-frequency channel. The signals from both channels are added with a reversed cross-over filter to get the required tracking error. In the low-frequency channel one can also use the current through the motor as a measure of the acceleration of the motor, provided the latter is free from hysteresis. The current



Copyright International Organization for Standardization
Provided by IHS under license with ISO
No reproduction or networking permitted without license from IHS
Not for Resale

must be corrected for the transfer function of the motor and then be converted to a tracking error with a filter with a transfer function $e/a = e/(x\omega^2)$, derived from equation (4).



Copyright International Organization for Standardization
Provided by IHS under license with ISO
No reproduction or networking permitted without license from IHS
Not for Resale

# Annex D

**(normative)**

## CRC for ID fields

The 16 check bits of the CRC of the ID field shall be computed over the first three bytes of this field. The generator polynomial shall be

$$G(x) = x^{16} + x^{12} + x^5 + 1$$

The residual polynomial is defined by

$$R(x) = \left( \sum_{i=8}^{i=23} \bar{b}_i x^i + \sum_{i=0}^{i=7} b_i x^i \right) x^{16} \bmod G(x)$$

where $b_i$ denotes a bit of the first three bytes and $\bar{b}_i$ an inverted bit. Bit $b_{23}$ is the highest order bit of the first byte.

The contents of the 16 check bits $c_k$ of the CRC are defined by

$$R_c(x) = \sum_{k=0}^{k=15} c_k x^k$$

$c_{15}$ is recorded in the highest order bit of the fourth byte in the ID field.



Copyright International Organization for Standardization
Provided by IHS under license with ISO
No reproduction or networking permitted without license from IHS
Not for Resale

# Annex E

**(normative)**

# Format of the Data field of a sector

## E.1 Contents of Data field

The bytes in the Data field constitute an ordered sequence $A_n$. The elements of $A_n$ are, depending on the value of $n$:

| | |
|---|---|
| $1 \le n \le 512$: $A_n = D_n$ | user data bytes |
| $513 \le n \le 516$: $A_n = F_m$ | bytes with non-specified content |
| $517 \le n \le 520$: $A_n = C_k$ | CRC check bytes |
| $521 \le n \le 600$: $A_n = E_{st}$ | ECC check bytes, |

where

$m = n - 512$

$k = n - 516$

$s = [(n - 521) \bmod 5] + 1$

$$t = \text{int}\left[\frac{n - 521}{5}\right] + 1$$

The notation int[$x$] denotes the largest integer not greater than $x$; ($x$ mod $y$) denotes the remainder of the integer division $x/y$.

The order of the user data bytes $D_n$ is the same as the order in which they are input into the controller of the drive, i.e. $D_1$ comes first. The Resync bytes are not included in $A_n$.

## E.2 Interleaving

Before the ECC and CRC bytes are calculated, the bytes in the Data field are five-way interleaved. For that purpose, the first three sub-groups of $A_n$ are mapped onto a two-dimensional matrix $B_{ij}$ with 104 rows and 5 columns (see table E.1). Thus

for $1 \le n \le 520$: $B_{ij} = A_n$,

where

$$i = 103 - \text{int}\left[\frac{n-1}{5}\right]$$

$j = (n - 1) \bmod 5$

## E.3 CRC and ECC

### E.3.1 General

The CRC and ECC shall be computed over the Galois field based on the primitive polynomial

$G_p(x) = x^8 + x^5 + x^3 + x^2 + 1$

The elements of the field are $\alpha^i = (\beta^i)^{88}$, where $\beta$ is a primitive root of $G_p(x)$. The value of the $n$-th bit in a byte is the coefficient of the $n$-th power of $\beta$, where $0 \le n \le 7$, when $\beta$ is expressed on a polynomial basis.



Copyright International Organization for Standardization
Provided by IHS under license with ISO
No reproduction or networking permitted without license from IHS Not for Resale

### E.3.2 CRC

The generator polynomial for the CRC bytes shall be

$$G_c(x) = \prod_{i=136}^{i=139} (x + \alpha^i)$$

The four check bytes of the CRC shall be computed over the user data and the four $F_m$ bytes. The information polynomial shall be

$$I_c(x) = \left[ \sum_{i=1}^{i=103} \sum_{j=0}^{j=4} B_{ij}\ x^{\,i} \right] + B_{0,0}\ x^{\,0}$$

The contents of the four check bytes $C_k$ of the CRC are defined by the residual polynomial

$$R_c(x) = I_c(x)\ x^4 \bmod G_c(x)$$

The storage locations for the coefficients of the polynomial are specified by

$$R_c(x) = \sum_{k=1}^{k=4} C_k\, x^{\,4-k}$$

### E.3.3 ECC

The primitive polynomial and the elements shall be as specified in E.3.1. The generator polynomial for the check bytes of the ECC shall be

$$G_e(x) = \prod_{i=120}^{i=135} (x + \alpha^i)$$

The 80 check bytes of the ECC shall be computed over the user data, the four $F_m$ bytes and the four CRC bytes. The corresponding five information polynomials shall be

$$I_{ej}(x) = \sum_{i=0}^{i=103} B_{ij}\, x^{\,i}$$

where $0 \le j \le 4$

The contents of the 16 check bytes $E_{st}$ for each polynomial $I_{ej}(x)$ are defined by the five residual polynomials

$$R_{ej}(x) = I_{ej}(x)\ x^{16} \bmod G_e(x)$$

The storage locations for the coefficients of the polynomials are specified by

$$P_{ej}(x) = \sum_{t=1}^{t=16} \overline{E}_{(j+1),t}\ x^{\,16-t}$$

The bits of the computed check bytes shall be inverted before they are encoded into Channel bits, as indicated by the use of $\overline{E}$ in the above formula and E in table E.1.

## E.4 Resync

The Resync fields shall be inserted in the Data field to prevent loss of byte synchronization and to limit the propagation of errors in the user data. Whilst they are numbered consecutively, all Resync fields are identical. They contain the following pattern in Channel bits which does not occur in user data

0010 0000 0010 0100 .

The Resync field $RS_n$ shall be inserted between bytes $A_{15n}$ and $A_{15n+1}$, where $1 \le n \le 39$.



Copyright International Organization for Standardization
Provided by IHS under license with ISO
No reproduction or networking permitted without license from IHS Not for Resale

## E.5 Recording Sequence

The bytes of the Data field shall be recorded on the disk immediately after the Sync field. Their order shall be according to the sequence $A_n$ with the Resync bytes inserted as specified in E.4.

Table E.1 shows in matrix form the arrangement of the bytes. The sequence of recording is from left to right and top to bottom. The first three bytes SB1, SB2 and SB3 form the Data Sync field, which precedes the Data field. The first 104 rows of the Data field contain user data and a few bytes with unspecified contents and CRC data. The last 16 rows contain the ECC check bytes.

**Table E.1 - Data field configuration. The indices *i* and *j* of bytes $B_{ij}$ are given along the sides of the matrix**

| Column No. *J* → | | | | 0 | 1 | 2 | 3 | 4 | Row No. *i* ↑ |
|---|---|---|---|---|---|---|---|---|---|
| | SB1 | SB2 | SB3 | $D_1$ | $D_2$ | $D_3$ | $D_4$ | $D_5$ | 103 |
| | | | | $D_6$ | $D_7$ | $D_8$ | $D_9$ | $D_{10}$ | 102 |
| | | | | $D_{11}$ | $D_{12}$ | $D_{13}$ | $D_{14}$ | $D_{15}$ | 101 |
| | | | $RS_1$ | $D_{16}$ | $D_{17}$ | $D_{18}$ | $D_{19}$ | $D_{20}$ | 100 |
| | | | | $D_{21}$ | $D_{22}$ | $D_{23}$ | $D_{24}$ | $D_{25}$ | 99 |
| 104 rows | | | | $D_{26}$ | $D_{27}$ | $D_{28}$ | $D_{29}$ | $D_{30}$ | 98 |
| | | | $RS_2$ | $D_{31}$ | $D_{32}$ | $D_{33}$ | $D_{34}$ | $D_{35}$ | 97 |
| | | | | | | | | | |
| | | | $RS_{33}$ | $D_{496}$ | $D_{497}$ | $D_{498}$ | $D_{499}$ | $D_{500}$ | 4 |
| | | | | $D_{501}$ | $D_{502}$ | $D_{503}$ | $D_{504}$ | $D_{505}$ | 3 |
| | | | | $D_{506}$ | $D_{507}$ | $D_{508}$ | $D_{509}$ | $D_{510}$ | 2 |
| | | | $RS_{34}$ | $D_{511}$ | $D_{512}$ | $D_{513}$ | $D_{514}$ | $D_{515}$ | 1 |
| | | | | $F_4$ | $C_1$ | $C_2$ | $C_3$ | $C_4$ | 0 |
| | | | | $E_{1,1}$ | $E_{2,1}$ | $E_{3,1}$ | $E_{4,1}$ | $E_{5,1}$ | -1 |
| | | | $RS_{35}$ | $E_{1,2}$ | $E_{2,2}$ | $E_{3,2}$ | $E_{4,2}$ | $E_{5,2}$ | -2 |
| | | | | $E_{1,3}$ | $E_{2,3}$ | $E_{3,3}$ | $E_{4,3}$ | $E_{5,3}$ | -3 |
| 16 rows | | | | | | | | | |
| | | | $RS_{39}$ | $E_{1,14}$ | $E_{2,14}$ | $E_{3,14}$ | $E_{4,14}$ | $E_{5,14}$ | -14 |
| | | | | $E_{1,15}$ | $E_{2,15}$ | $E_{3,15}$ | $E_{4,15}$ | $E_{5,15}$ | -15 |
| | | | | $E_{1,16}$ | $E_{2,16}$ | $E_{3,16}$ | $E_{4,16}$ | $E_{5,16}$ | -16 |

ECMA-94-0146-A



Copyright International Organization for Standardization
Provided by IHS under license with ISO
No reproduction or networking permitted without license from IHS
Not for Resale

# Annex F

**(normative)**

## Contents of the Control Zones

Each sector in the two Control Zones shall contain the same Control data provided by the manufacturer of the media. The Control data is divided into four groups in the following way.

1. The media characterization data gives a general characterization of the disk. It specifies the type of disk, the ECC, the tracking method, etc. The data is recorded in bytes 0 to 17. Bytes 0 to 9, 12 and 13 are mandatory for all media, bytes 10 and 11 are mandatory for rewritable and partially embossed media only.
2. The Recording Control data specifies the settings of the drive for reading, writing and erasing. Space is allocated for the following sets of data:
   - three wavelengths $L_1$, $L_2$ and $L_3$,
   - for each wavelength the reflectance $R$ of the disk,
   - for each wavelength four rotational frequencies $N_1$, $N_2$, $N_3$ and $N_4$
   - for each value of N:
     - the maximum read power
     - one set of erase conditions
     - three sets of write conditions: viz. two sets for constant pulse width and one set for constant pulse power (each set may contain three values for the inner, middle and outer radius of the Information Zone).

   The Recording Control data can be divided in two sub-groups, one for the conformance tests described in clauses 18 to 27, and one for control of user drives.

   a) The conformance test data specifies the settings for the Reference Drive. They can also be used as reference data for user drives. The conformance test data shall be recorded in bytes 18 to 34, 44 to 47, and are mandatory for rewritable and partially embossed media.

   b) The User reference data contains the recommendation of the media manufacturer for the settings of a user drive for operating the disk in the test environment. This data is recorded in bytes 48 to 359, and is optional, except in those bytes listed in c).

   c) The following bytes are reserved for future standardization and shall be set to (FF):

| | |
|---|---|
| 26 to 30 | 196 to 200 |
| 35 to 43 | 224 to 228 |
| 54 to 58 | 254 to 258 |
| 82 to 86 | 263 to 271 |
| 110 to 114 | 282 to 286 |
| 140 to 144 | 310 to 314 |
| 149 to 157 | 338 to 342 |
| 168 to 172 | |

3. The System data gives the characteristics of an Embossed Zone on the disk. The data shall be recorded in bytes 380 to 383, and is mandatory for partially and fully embossed media. Bytes 400 to 428 are mandatory for all types of media.
4. The last group contains unspecified data, recorded in bytes 480 to 511.

Optional bytes shall either contain the prescribed data or shall be set to (FF).



Copyright International Organization for Standardization
Provided by IHS under license with ISO
No reproduction or networking permitted without license from IHS Not for Resale

## F.1 Media characterization data

**Byte 0: Format Descriptor 1**

This byte shall be set to 01100000, indicating Continuous Composite Servo tracking, Logical ZCAV Rotational Recording mode, (2,7) RLL mark position Recording code.

**Byte 1: Format Descriptor 2**

This byte shall be set to 00010001, indicating Reed-Solomon Long Distance Error Correction Code of degree 16 with a 5-way interleave, 512 bytes user data per sector.

**Byte 2: Sectors per track**

This byte shall be set to 00011001, indicating 25 sectors per track.

**Byte 3: Reflectance**

This byte shall specify the disk manufacturer's specification of the reflectance $R$ of the disk, expressed as a fraction, when measured at a nominal wavelength of 780 nm. It is specified as a number $n$ such that

$$n = 100\ R$$

**Byte 4: On-land or in-groove recording**

This byte shall be set to 00000000, indicating on-land recording.

**Byte 5: Reserved**

This byte shall be set to (FF).

**Byte 6: Maximum read power**

This byte shall specify the lowest of the values specified in Bytes 21, 135 and 249 of the Control Zones. It specifies the maximum read power $P_w$, in milliwatts, permitted for reading the Control Zones. It is specified as a number $n$ such that

$$n = 20\ P_w$$

**Byte 7: Media type**

The allowed settings of this byte shall be

| | |
|---|---|
| 0000 0000: | indicates fully embossed media |
| 0010 0000: | indicates fully rewritable MO media |
| 1010 0000: | indicates rewritable MO media with partially embossed data |

Other settings of this byte are prohibited by this International Standard, they are reserved for future standardization. (See annex S)

**Bytes 8, 9: Last track in the Data Zone**

These bytes shall be set to 01000110 and 00010011, respectively, indicating the MSB, LSB of the track number of the last track in the Data Zone, viz. 17939.

**Byte 10: Polarity of the figure of merit**

This byte shall be set to 00000001, indicating that the polarity is negative.

**Byte 11: Magnitude of the figure of merit**

This byte shall indicate the magnitude of the figure of merit $F$, specified as a number $n$, such that

$$n = 10000\ F$$

**Byte 12: Track pitch**

This byte shall specify the track pitch in µm times 100. It shall be set to (8B) representing a track pitch of 1,39 µm.

**Byte 13: Reserved**

This byte shall be set to (FF).



Copyright International Organization for Standardization
Provided by IHS under license with ISO
No reproduction or networking permitted without license from IHS Not for Resale

**Bytes 14 to 17: Unspecified**

These bytes may be used for manufacturer identification. They shall be ignored in interchange.

## F.2 Recording control data

**Byte 18: Wavelength**

This byte shall specify the wavelength $L_1$, in nanometres, of the drive as a number $n$ such that

$$n = 1/5\ L_1.$$

This byte shall be set to $n = 156$.

**Byte 19: Reflectance**

This byte shall specify the reflectance $R_1$ of the disk measured at wavelength $L_1$ as a number $n$ such that

$$n = 100\ R_1.$$

The value of $n$ shall be equal to that recorded in byte 3.

**Byte 20: Rotational frequency**

This byte shall specify the rotational frequency $N_1$ in hertz of the disk as a number n such that

$$n = N_1.$$

This byte shall be set to $n = 30$.

**Byte 21: Maximum read power**

This byte shall specify the maximum read power $P_1$, in milliwatts, in the Information Zone under condition $L_1$ and $N_1$, expressed as a number $n$ such that

$$n = 20\ P_1$$

where $24 \leq n \leq 26$

**Bytes 22 to 25: Write power at constant pulse width**

Bytes 22 to 25 shall specify the write powers $P_w$, in milliwatts, for three values of a pulse width $T_p$, under condition $L_1$ and $N_1$, where T is the period of one Channel bit. $P_w$ is expressed as a number $n$ such that

$$n = 5\ P_w.$$

Byte 22 Write power at $T_p$ = 1,00 T ns and Band 0
Byte 23 Write power at $T_p$ = 1,00 T ns and Band 4
Byte 24 Write power at $T_p$ = 1,00 T ns and Band 9
Byte 25 Write power at $T_p$ = 0,50 T ns and Band 0.

**Bytes 26 to 30: Reserved**

These bytes shall be set to (FF).

**Bytes 31 to 34: Write pulse width at constant write power**

Bytes 31 to 34 shall specify the write pulse width $T_p$, in nanoseconds, at a write power $P_w$ under condition $L_1$ and $N_1$. $T_p$ is expressed as a number $n$ such that

$$n = T_p$$

Byte 31 Write power
Byte 32 Write pulse width at Band 0
Byte 33 Write pulse width at Band 4
Byte 34 Write pulse width at Band 9



Copyright International Organization for Standardization
Provided by IHS under license with ISO
No reproduction or networking permitted without license from IHS
Not for Resale

**Bytes 35 to 43: Reserved**

These bytes shall be set to (FF).

**Bytes 44 to 47: DC erase power**

Byte 44 shall be set to (00). Bytes 45 to 47 shall then specify erase powers $P_e$, in milliwatts, for a d.c. erase at three radii, under condition $L_1$ and $N_1$. $P_e$ is expressed in the same way as $P_w$ in bytes 22 to 30.

Byte 45 Erase power at Band 0
Byte 46 Erase power at Band 4
Byte 47 Erase power at Band 9
Byte 48: Rotational frequency

This byte shall specify the rotational frequency $N_2$, in hertz, of the disk, expressed in the same way as $N_1$ in byte 20.

If this byte is not set to (FF), $n$ shall be set to 50.

**Bytes 49 to 75**

These bytes shall specify the same parameters as in bytes 21 to 47, but under the condition $L_1$ and $N_2$, except bytes 54 to 58 which shall be set to (FF).

**Byte 76: Rotational frequency**

This byte shall specify the rotational frequency $N_3$, in hertz, of the disk, expressed in the same way as $N_1$ in byte 20.

If this byte is not set to (FF), $n$ shall be set to 60.

**Bytes 77 to 103**

These bytes shall specify the same parameters as in bytes 21 to 47, but under the condition $L_1$ and $N_3$, except bytes 82 to 86 which shall be set to (FF).

**Byte 104: Rotational frequency**

This byte shall specify the rotational frequency $N_4$, in hertz, of the disk, expressed in the same way as $N_1$ in byte 20.

If this byte is not set to (FF), $n$ shall have a value other than 30, 50 or 60.

**Bytes 105 to 131**

These bytes shall specify the same parameters as in bytes 21 to 47, but under the condition $L_1$ and $N_4$, except bytes 112 to 114 which shall be set to (FF).

**Byte 132: Wavelength**

This byte shall specify the wavelength $L_2$ of the drive, in nanometres, as a number $n$ such that

$$n = 1/5\ L_2$$

**Byte 133: Reflectance**

This byte shall specify the reflectance $R_2$ of the disk measured at wavelength $L_2$ as a number $n$ such that

$$n = 100\ R_2$$

**Byte 134: Rotational frequency**

This bytes shall specify the rotational frequency $N_1$ of the disk, in hertz, as a number $n$ such that

$$n = N_1$$

This byte shall be set to $n = 30$.

**Byte 135: Maximum read power**

This byte shall specify the maximum read power $P_2$ in the Information Zone, in milliwatts, under condition $L_2$ and $N_1$, expressed as a number $n$ such that

$$n = 20\ P_2$$



Copyright International Organization for Standardization
Provided by IHS under license with ISO
No reproduction or networking permitted without license from IHS Not for Resale

where $24 \leq n \leq 26$

**Bytes 136 to 139: Write power at constant pulse width**

These bytes shall specify the write powers $P_w$ in milliwatts for three values of a pulse width $T_p$, under condition $L_2$ and $N_1$ for three radii, where $T$ is the period of one Channel bit. $P_w$ is expressed as number $n$ such that

$$n = 5\ P_w$$

Byte 136 Write power at $T_p$ = 1,00 $T$ ns and Band 0
Byte 137 Write power at $T_p$ = 1,00 $T$ ns and Band 4
Byte 138 Write power at $T_p$ = 1,00 $T$ ns and Band 9
Byte 139 Write power at $T_p$ = 0,50 $T$ ns and Band 0

**Bytes 140 to 144: Reserved**

These bytes shall be set to (FF).

**Bytes 145 to 148: Write pulse width at constant write power**

These bytes shall specify the write pulse width $T_p$, in nanoseconds, at a write power $P_w$ under condition $L_2$ and $N_1$ for three radii. $T_p$ is expressed as a number $n$ such that

$$n = T_p$$

$P_w$ is expressed in the same way as in bytes 136 to 139.

Byte 145 Write power
Byte 146 Write pulse width at Band 0
Byte 147 Write pulse width at Band 4
Byte 148 Write pulse width at Band 9

**Bytes 149 to 157: Reserved**

These bytes shall be set to (FF).

**Bytes 158 to 161: DC erase power**

Byte 158 shall be set to (00). Bytes 159 to 161 shall then specify erase powers $P_e$, in milliwatts, for a d.c. erase at three radii, under condition $L_2$ and $N_1$. $P_e$ is expressed in the same way as $P_w$ in bytes 136 to 139.

Byte 159 Erase power at Band 0
Byte 160 Erase power at Band 4
Byte 161 Erase power at Band 9

**Byte 162: Rotational frequency**

This byte shall specify the rotational frequency $N_2$ of the disk, in hertz , expressed in the same way as $N_1$ in byte 134.

If this byte is not set to (FF), $n$ shall be set to 50.

**Bytes 163 to 189**

These bytes shall specify the same parameters as in bytes 135 to 161, but under the condition $L_2$ and $N_2$, except bytes 168 to 172 which shall be set to (FF).

Byte 190: Rotational frequency

This byte shall specify the rotational frequency $N_3$ of the disk, in hertz , expressed in the same way as $N_1$ in byte 134.

If this byte is not set to (FF), $n$ shall be set to 60.

**Bytes 191 to 217**

These bytes shall specify the same parameters as in bytes 135 to 161, but under the condition $L_2$ and $N_3$, except bytes 196 to 200 which shall be set to (FF).

**Byte 218: Rotational frequency**

This byte shall specify the rotational frequency $N_4$ of the disk, in hertz , expressed in the same way as $N_1$ in byte 134.



Copyright International Organization for Standardization
Provided by IHS under license with ISO
No reproduction or networking permitted without license from IHS Not for Resale

If this byte is not set to (FF), $n$ shall have a value other than 30, 50 or 60.

**Bytes 219 to 245**

These bytes shall specify the same parameters as in bytes 135 to 161, but under the condition $L_2$ and $N_4$, except bytes 226 to 228 which shall be set to (FF).

**Byte 246: Wavelength**

This byte shall specify the wavelength $L_3$ of the drive, in nanometres, expressed in the same way as $L_2$ in byte 132.

**Bytes 247 to 359**

These bytes shall specify the same parameters as in bytes 133 to 245, but under the condition $L_3$, except bytes 254 to 258, 263 to 271, 282 to 286, 310 to 314 and 338 to 342 which shall be set to (FF).

**Bytes 360 to 379: Reserved**

These bytes shall be set to (FF).

**Summary of recording control data**

Table F.1 summarizes the requirements for bytes 18 to 359. In this table:

- numbers on light shaded background are those of the bytes containing mandatory data, see 2a);
- numbers on darkly shaded background are those of the bytes which shall always be set to (FF), see 2c);
- numbers on white background are those of the bytes the content of which is optional. These bytes shall either contain the value specified for them in F.1 or be set to (FF) (see 2b).

## F.3 System data

Bytes 380 to 399 are mandatory for all Types and bytes 400 to 479 are mandatory for Type P-ROM.

**Bytes 380 and 387: Reserved**

These bytes shall be set to (FF).

**Bytes 388 and 389: Number of Tracks in the First Data Band**

These bytes shall be set to 00000101 and 01100100, respectively, indicating the MSB, LSB of the number of tracks in the first data Band, viz. 1380. The number includes DMA tracks.

**Bytes 390: Number of Bands**

These bytes shall be set to 00001010, indicating the number of bands is 10.

**Bytes 391: Banding Constant for the Media**

These bytes shall be set to 01011100, indicating the banding constant for the media is 92.

**Bytes 392 to 393: Number of Revolutions per Data Band**

These bytes shall be set to 00000100 and 01111110, respectively, indicating the MSB, LSB of the number of revolutions per Data Band, viz. 1150.

**Bytes 394 to 399: Reserved**

These bytes shall be set to (FF).

**Bytes 400 to 423: Control bytes for partially embossed disks**

This information is required for partially embossed disks and contains parameter values for bytes 0 to 23 of the DDS. These control bytes shall be defined by the manufacturer at the time the disk is manufactured. Bytes 416 to 423, which represent addresses of the PDL and SDL, shall be set to (FF). The control bytes can be used by the user as input to the format process and to recover the contents of the DDS if lost through machine error or if inadvertently overwritten. For fully rewritable and fully embossed disks, these bytes shall be set to (FF).



Copyright International Organization for Standardization
Provided by IHS under license with ISO
No reproduction or networking permitted without license from IHS Not for Resale

**Bytes 424 to 479: Reserved**

These bytes shall be set to (FF).

## F.4 Unspecified data

**Bytes 480 to 511**

The contents of these bytes are not specified in this International Standard. They may contain an identification of the manufacturer. They shall be ignored in interchange.



Copyright International Organization for Standardization
Provided by IHS under license with ISO
No reproduction or networking permitted without license from IHS
Not for Resale

**Table F.1 - Summary of recording control data**

| | $L_1$ $N_1$ | $L_1$ $N_2$ | $L_1$ $N_3$ | $L_1$ $N_4$ | $L_2$ $N_1$ | $L_2$ $N_2$ | $L_2$ $N_3$ | $L_2$ $N_4$ | $L_3$ $N_1$ | $L_3$ $N_2$ | $L_3$ $N_3$ | $L_3$ $N_4$ |
|---|---|---|---|---|---|---|---|---|---|---|---|---|
| $L$ | 18 | | | | 132 | | | | 246 | | | |
| $R$ | 19 | | | | 133 | | | | 247 | | | |
| $N$ | 20 | 48 | 76 | 104 | 134 | 162 | 190 | 218 | 248 | 276 | 304 | 332 |
| Max. $P_{read}$ | 21 | 49 | 77 | 105 | 135 | 163 | 191 | 219 | 249 | 277 | 305 | 333 |
| $P_w$ | 22 | 50 | 78 | 106 | 136 | 164 | 192 | 220 | 250 | 278 | 306 | 334 |
| $P_w$ | 23 | 51 | 79 | 107 | 137 | 165 | 193 | 221 | 251 | 279 | 307 | 335 |
| $P_w$ | 24 | 52 | 80 | 108 | 138 | 166 | 194 | 222 | 252 | 280 | 308 | 336 |
| $P_w$ | 25 | 53 | 81 | 109 | 139 | 167 | 195 | 223 | 253 | 281 | 309 | 337 |
| Reserved | 26 | 54 | 82 | 110 | 140 | 168 | 196 | 224 | 254 | 282 | 310 | 338 |
| Reserved | 27 | 55 | 83 | 111 | 141 | 169 | 197 | 225 | 255 | 283 | 311 | 339 |
| Reserved | 28 | 56 | 84 | 112 | 142 | 170 | 198 | 226 | 256 | 284 | 312 | 340 |
| Reserved | 29 | 57 | 85 | 113 | 143 | 171 | 199 | 227 | 257 | 285 | 313 | 341 |
| Reserved | 30 | 58 | 86 | 114 | 144 | 172 | 200 | 228 | 258 | 286 | 314 | 342 |
| $T_p$ | 31 | 59 | 87 | 115 | 145 | 173 | 201 | 229 | 259 | 287 | 315 | 343 |
| $T_p$ | 32 | 60 | 88 | 116 | 146 | 174 | 202 | 230 | 260 | 288 | 316 | 344 |
| $T_p$ | 33 | 61 | 89 | 117 | 147 | 175 | 203 | 231 | 261 | 289 | 317 | 345 |
| $T_p$ | 34 | 62 | 90 | 118 | 148 | 176 | 204 | 232 | 262 | 290 | 318 | 346 |
| Reserved | 35 | 63 | 91 | 119 | 149 | 177 | 205 | 233 | 263 | 291 | 319 | 347 |
| Reserved | 36 | 64 | 92 | 120 | 150 | 178 | 206 | 234 | 264 | 292 | 320 | 348 |
| Reserved | 37 | 65 | 93 | 121 | 151 | 179 | 207 | 235 | 265 | 293 | 321 | 349 |
| Reserved | 38 | 66 | 94 | 122 | 152 | 180 | 208 | 236 | 266 | 294 | 322 | 350 |
| Reserved | 39 | 67 | 95 | 123 | 153 | 181 | 209 | 237 | 267 | 295 | 323 | 351 |
| Reserved | 40 | 68 | 96 | 124 | 154 | 182 | 210 | 238 | 268 | 296 | 324 | 352 |
| Reserved | 41 | 69 | 97 | 125 | 155 | 183 | 211 | 239 | 269 | 297 | 325 | 353 |
| Reserved | 42 | 70 | 98 | 126 | 156 | 184 | 212 | 240 | 270 | 298 | 326 | 354 |
| Reserved | 43 | 71 | 99 | 127 | 157 | 185 | 213 | 241 | 271 | 299 | 327 | 355 |
| (00) | 44 | 72 | 100 | 128 | 158 | 186 | 214 | 242 | 272 | 300 | 328 | 356 |
| $P_e$ | 46 | 74 | 102 | 130 | 160 | 188 | 216 | 244 | 274 | 302 | 330 | 358 |
| $P_e$ | 45 | 73 | 101 | 129 | 159 | 187 | 215 | 243 | 273 | 301 | 329 | 357 |
| $P_e$ | 47 | 75 | 103 | 131 | 161 | 189 | 217 | 245 | 275 | 303 | 331 | 359 |

Mandatory: Bytes set to (FF) Mandatory Not mandatory

See F.1 for the specification of the content of each byte.



Copyright International Organization for Standardization
Provided by IHS under license with ISO
No reproduction or networking permitted without license from IHS Not for Resale

# Annex G

**(informative)**

## Guidelines for sector replacement

Clause 19 assumes that a sector is defective and will be replaced by the defect management, for instance when any of the following conditions exist:

a) a sector has two or three ID fields with each an error as detected by the CRC check;

b) the Sector Mark cannot be recognized;

c) a column in the Data field (see table E.1) contains more than three defective bytes $A_n$.



Copyright International Organization for Standardization
Provided by IHS under license with ISO
No reproduction or networking permitted without license from IHS Not for Resale

# Annex H

**(normative)**

## Measurement of the figure of merit

**H.1** The figure of merit enables a drive designer to determine the amplitude of the signal in Channel 2 of the drive from magneto-optical marks recorded on the disk at a low spatial frequency in both the radial and tangential direction.

Determination of the figure of merit using a drive as the Reference Drive specified in clause 9 will not measure media properties only but also the optical retardation of the optical system of the drive. Therefore, a calibration of the drive is needed with a conventional determination of the figure of merit by measuring the reflectance, Kerr rotation and ellipticity. This calibration can only be executed reliably on media with low coercivity.

**H.2** The drive shall be calibrated as follows. A test disk with negligible birefringence, e.g. a glass disk, and a low-coercivity magneto-optical layer is used for a conventional determination of the reflectance $R$, the Kerr rotation $\theta$ of the polarization between both opposite states of magnetization of the layer, and the Kerr ellipticity $\beta$. The figure of merit of the media is then

$$F_L = R \sin\theta \cos 2\beta$$

A low-frequency test pattern is written on the same disk. The written domains shall be substantially larger than the focal spot, so as to work in the low spatial frequency region where the modulation transfer function of the optical system is one. This implies that for a disk rotating at 30 Hz, a pattern of long domains with a frequency lower than 100 kHz has to be written on several consecutive tracks, while keeping the marks in neighbouring tracks radially aligned and overlapping.

The pattern is read with the drive to be calibrated. The resulting peak-to-peak amplitude $VL$ of the signal in Channel 2 of the drive is the required calibration constant for this drive.

**H.3** The figure of merit of any low- or high-coercivity disk can now be determined on the calibrated drive by writing the above test pattern and reading the peak-to-peak amplitude $V$ of the signal in Channel 2. The figure of merit $F$ of this disk is then

$$F = F_L \frac{V}{VL}$$



Copyright International Organization for Standardization
Provided by IHS under license with ISO
No reproduction or networking permitted without license from IHS
Not for Resale

# Annex J

**(informative)**

## Read power, write power and erase power

## J.1 Read power

The values of $P_{max}$ for two further rotational frequencies are defined in table J.1. The value contained in the Control Zone may not exceed these values for a specific rotational frequency.

**Table J.1 - Rotational frequency and maximum read power**

| Rotational Frequency | Maximum Read Power $P_{max}$ |
|---|---|
| 50 Hz | 1,6 mW ≤ $P_{max}$ ≤ 1,7 mW |
| 60 Hz | 1,8 mW ≤ $P_{max}$ ≤ 2,0 mW |

## J.2 Write power and erase power

The values of write power and erase power contained in the Control Zones are described as the values at the temperature of 23 °C only and should not exceed the values for the following two rotational frequencies as follows:

| Rotational Frequency | Maximum Write Power and Maximum Erase Power | |
|---|---|---|
| 50 Hz | $P_{w,e} = 50\left(\frac{1}{T_p} + \frac{1}{\sqrt{T_p}}\right)$ mW | $T_p \leq 30$ ns |
| | $P_{w,e} = 11$ mW | $T_p > 30$ ns |
| 60 Hz | $P_{w,e} = 50\left(\frac{1}{T_p} + \frac{1}{\sqrt{T_p}}\right)$ mW | $T_p \leq 25$ ns |
| | $P_{w,e} = 12$ mW | $T_p > 25$ ns |

where $P_{w,e}$ is the write power ($P_w$) or erase power ($P_e$) and $T_p$ is the numeric value in nanoseconds of the write pulse width.

The write power and erase power should be compensated for the temperature of the disk according to the formula:

$$P_t = P_{23} - [0{,}03\ (T_{op} - 23)]$$

where

$P_t$ is the compensated power,
$P_{23}$ is the value described in the Control Zone, and
$T_{op}$ is the numeric value in degrees centigrade (°C) of the temperature of the disk.



Copyright International Organization for Standardization
Provided by IHS under license with ISO
No reproduction or networking permitted without license from IHS
Not for Resale

# Annex K

**(normative)**

## Test method for measuring the adsorbent force of the hub

**K.1** The purpose of this test is to determine the magnetic characteristic of the magnetizable material of the hub.

**K.2** The test device (see figure K.1) consists of a spacer, a magnet, a back yoke and a centre shaft. The dimensions of the test device are as follows:

$D_d$ = 7,0 mm ± 0,1 mm

$D_e$ = 14,0 mm ± 0,1 mm

$D_f$ = 13,0 mm max.

$D_g = 3{,}9\ ^{+0{,}0\ \text{mm}}_{-0{,}1\ \text{mm}}$

$H_c$ = 0,40 mm ± 0,01 mm

$H_d$ = 1,00 mm ± 0,05 mm (Typical, to be adjusted to meet the requirement of K.4)

**K.3** The material of the test device shall be:

| | |
|---|---|
| Magnet | : Sm-Co |
| Back yoke | : Any suitable magnetizable material |
| Spacer | : Non-magnetizable material or air gap |
| Centre shaft | : Non-magnetizable material |

**K.4** The characteristics of the magnet with back yoke are as follows:

| | |
|---|---|
| Number of poles | : 4 (Typical) |
| Maximum energy product (BHmax) | :175 kJ/m$^3$ ± 16 kJ/m$^3$ (Typical) |

The characteristics of the magnet with back yoke shall be adjusted by the use of a pure nickel plate with the following dimensions (see figure K.2), and the adsorbent force of this plate at the point of $H_c$ = 0,4 mm when spaced from the magnet surface shall be 3,3 N ± 0,2 N.

$D_h$ = 6,0 mm ± 0,1 mm

$D_i$ = 15,0 mm ± 0,1 mm

$H_e$ = 1,00 mm ± 0,05 mm

**K.5** The test condition for temperature shall be as specified in 8.1.1.



Copyright International Organization for Standardization
Provided by IHS under license with ISO
No reproduction or networking permitted without license from IHS Not for Resale

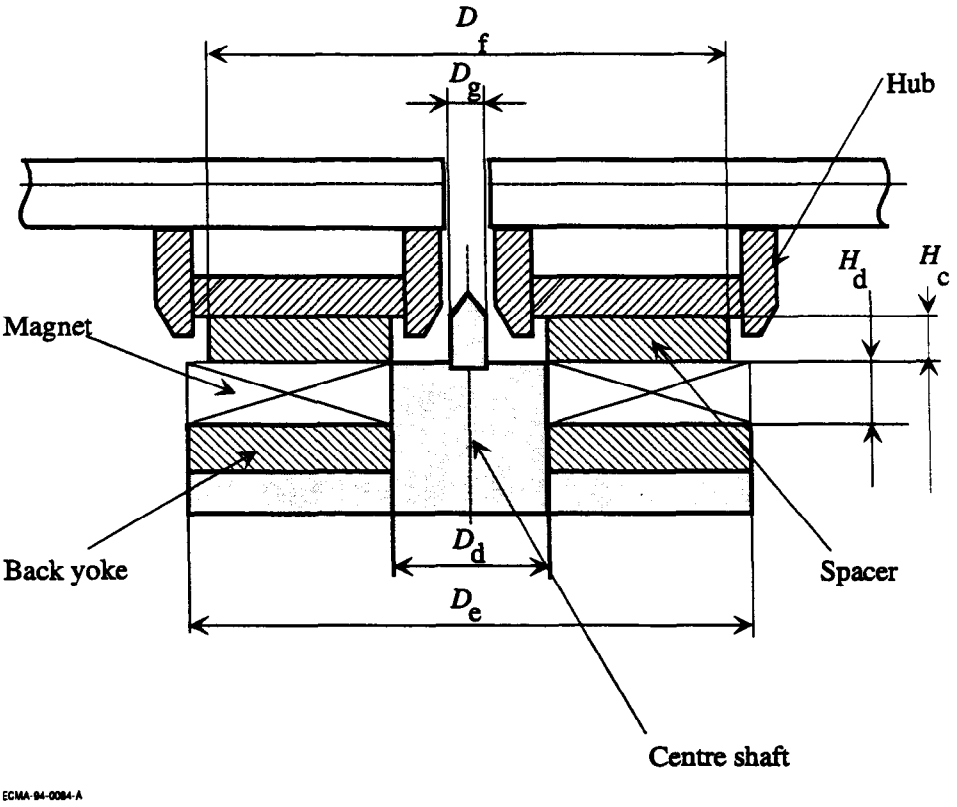


**Figure K.1 - Test device for the clamping characteristic of the hub**

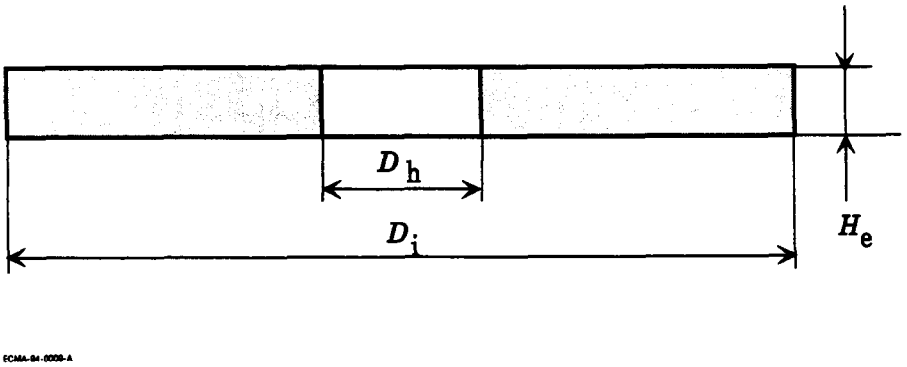


**Figure K.2 - Calibration plate of the test device**



Copyright International Organization for Standardization
Provided by IHS under license with ISO
No reproduction or networking permitted without license from IHS
Not for Resale

# Annex L

**(informative)**

## Derivation of the operating climatic environment

This annex gives some background on how some of the conditions of the operating environment in clause 8.1.2 have been derived.

### L.1 Standard climatic environment classes

The conditions of the ODC operating environment are, with a few exceptions mentioned below, based on parameter values of the IEC standard climatic environment class 3K3 described in IEC publication 721-3-3:1987[1]. This publication defines environmental classes for stationary use of equipment at weather-protected locations.

The IEC class 3K3 refers to climatic conditions which

"... may be found in normal living or working areas, e.g. living rooms, rooms for general use (theatres, restaurants, etc.), offices, shops, workshops for electronic assemblies and other electrotechnical products, telecommunication centres, storage rooms for valuable and sensitive products."

### L.2 Overtemperature considerations

While IEC class 3K3 defines the limits for the room climate only, the ODC operating environment specification in this International Standard takes into consideration also system and drive overtemperature. This means that when inserted in a drive, the ODC will sense a temperature which is above the ambient room temperature. The figures in the operating environment specification have been calculated from the assumption that this overtemperature may be up to 20 °C.

### L.3 Absolute humidity

The introduction of the parameter

absolute humidity [unit: g water / $m^3$ of air]

is very useful when studying overtemperature. When the temperature rises inside a drive, the relative humidity goes down but the absolute humidity remains substantially constant. So, making room for overtemperature in the operating environment specification affects not only the upper temperature limit but also the lower relative humidity limit. The relationship between these parameters is shown in the climatogram (the relative humidity versus temperature map) of the ODC operating environment, figure L.1.

The absolute humidity restrictions influence the operating environment in the following two ways:

a) Combinations of high temperatures and high relative humidities are excluded. Such combinations could have negative influence on the performance and the life of ODCs.

b) Combinations of low temperatures and low relative humidities are excluded. Such combinations are very unlikely to occur in worldwide normal office environments.

### L.4 Deviations from the IEC standard environment class

Apart from the changes introduced by the overtemperature considerations mentioned above, there are a few more parameter values which are not based on IEC class 3K3. These are:

---

[1] *Classification of environmental conditions - Part 3: Classification of groups of environmental parameters and their severities. Stationary use at weatherprotected locations.*



Copyright International Organization for Standardization
Provided by IHS under license with ISO
No reproduction or networking permitted without license from IHS Not for Resale

- Atmospheric pressure

  The IEC class 3K3 lower limit of 70 kPa has been extended to 60 kPa. ODCs show no intrinsic pressure sensitivity and 70 kPa excludes some possible markets for ODCs.

- Absolute humidity

  The IEC class 3K3 value for the upper limit of 25 $g/m^3$ has been raised to 30 $g/m^3$ in view of some expected operation in portable devices outside the controlled office environment.

- Temperature

  The maximum temperature around the ODC, i.e. room temperature plus overtemperature, has been limited to 55 °C (while IEC class 3K3 + 20 °C would have become 60 °C). For ODCs according to this International Standard, however, the 55 °C limit is considered to be a physical limit above which operation (as well as storage) is not safe.

  This means that equipment designers may want to ensure adequate cooling inside the drive especially when the room temperature approaches the upper IEC class 3K3 limit of 40 °C.

- Further

  The rates of change (the gradients) of temperature and relative humidity are not according to IEC class 3K3.

## L.5 Wet bulb temperature specifications

Instead of specifying limits for the absolute humidity, some of the earlier standards for ODCs as well as those for other digital data storage media often used restrictions of the parameter

wet bulb temperature [unit: °C]

in order to avoid too severe combinations of high temperatures and high relative humidities.

In order to facilitate comparisons between different specifications, figure L.2 shows wet bulb temperatures of interest for the ODC operating environment, as well as for the testing and storage environments. Since wet bulb temperatures vary slightly with the atmospheric pressure, the diagram is valid for the normal pressure of 101,3 kPa only.



Copyright International Organization for Standardization
Provided by IHS under license with ISO
No reproduction or networking permitted without license from IHS Not for Resale

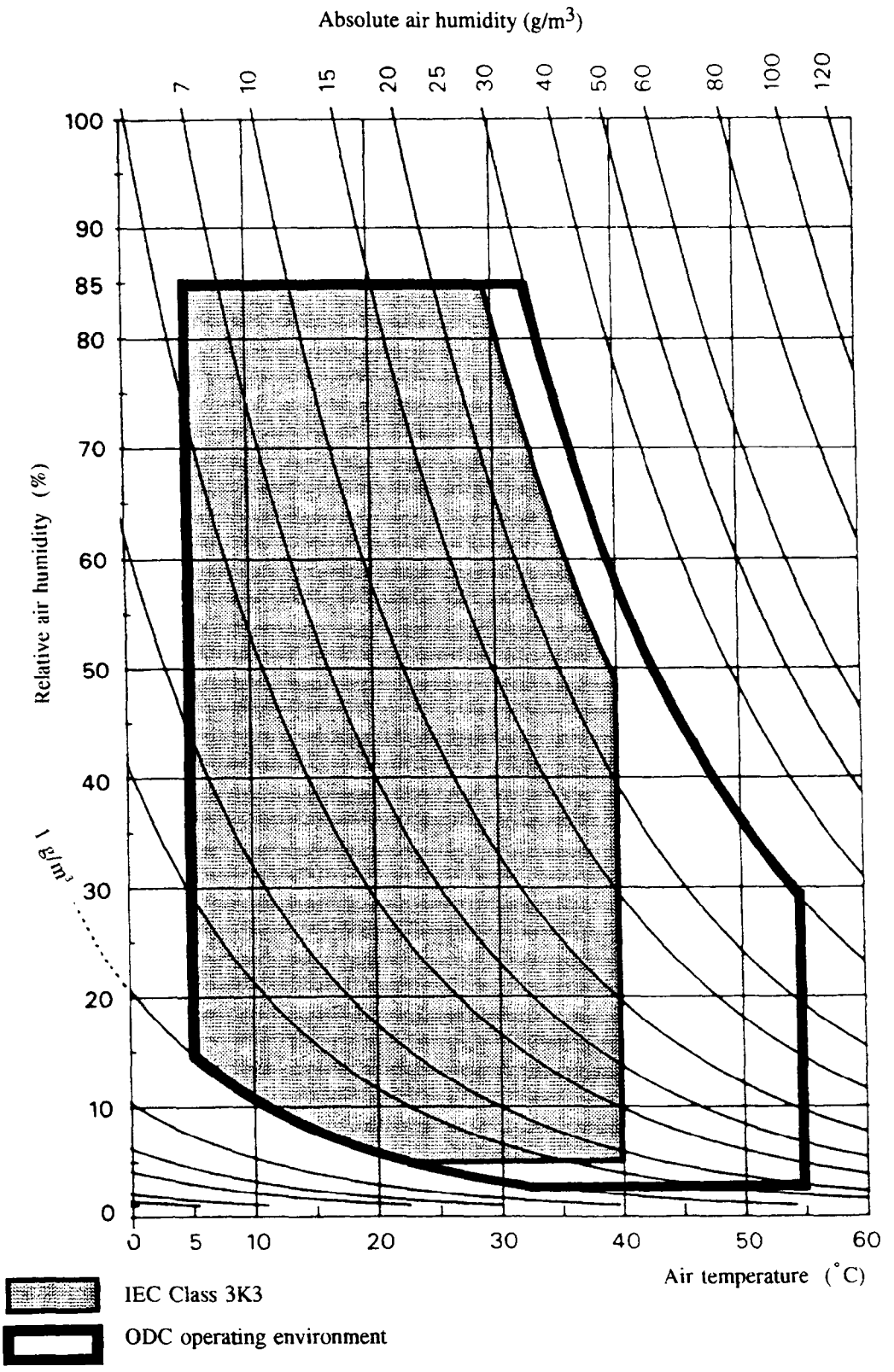


**Figure L.1 - Climatogram of IEC Class 3K3 and the ODC operating environment**



Copyright International Organization for Standardization
Provided by IHS under license with ISO
No reproduction or networking permitted without license from IHS
Not for Resale

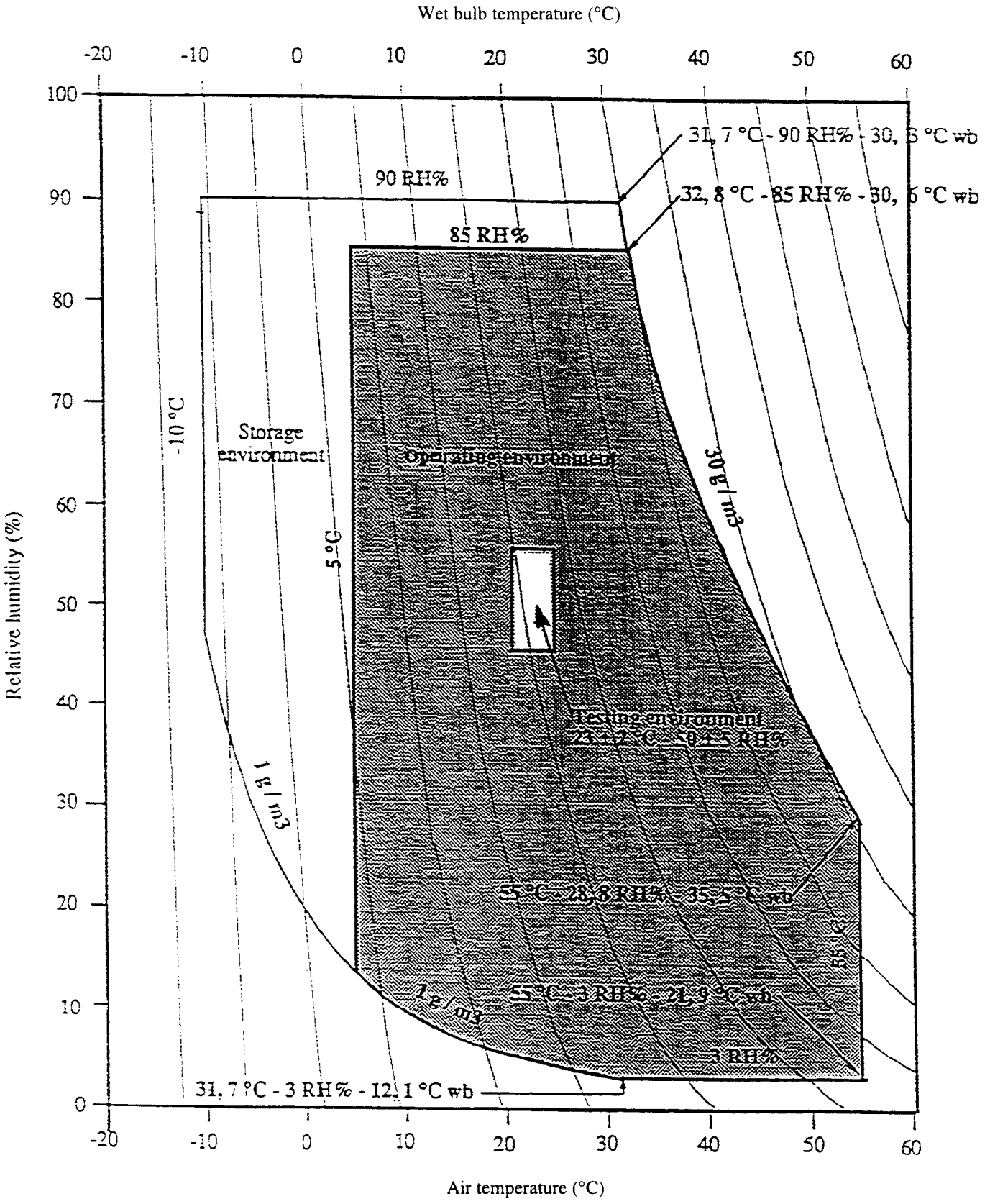


Note - Temperature (°C) - Relative humidity (RH%) - Wet bulb temperature (°C wb)

**Figure L.2 - Wet bulb temperatures of the operating and storage environments**



Copyright International Organization for Standardization
Provided by IHS under license with ISO
No reproduction or networking permitted without license from IHS
Not for Resale

# Annex M

**(normative)**

## Air cleanliness class 100 000

The classification of air cleanliness is based on a particle count with a maximum allowable number of specified minimum sized particles per unit volume, and on a statistical average particle size distribution.

### M.1 Definition

The particle count shall not exceed a total of 3 500 000 particles per cubic metre of a size 0,5 µm and larger.

The statistical average particle size distribution is given in figure M.1. Class 100 000 means that 3 500 000 particles per cubic metre of a size of 0,5 µm and larger are allowed, but only 25 000 particles per cubic metre of a size of 5,0 µm and larger.

It should be recognized that single sample distribution may deviate from this curve because of local or temporary conditions. Counts below 350 000 particles per cubic metre are unreliable except when a large number of samplings is taken.

### M.2 Test method

For particles of sizes of the 0,5 µm to 5,0 µm, equipment employing light-scattering principles shall be used. The air in the controlled environment is sampled at a known flow rate. Particles contained in the sampled air are passed through an illuminated sensing zone in the optical chamber of the instrument. Light scattered by individual particles is received by a photo detector which converts the light pulses into electrical current pulses. An electronic system relates the pulse height to particle size and counts the pulses such that the number of particles in relation to particle size is registered or displayed.

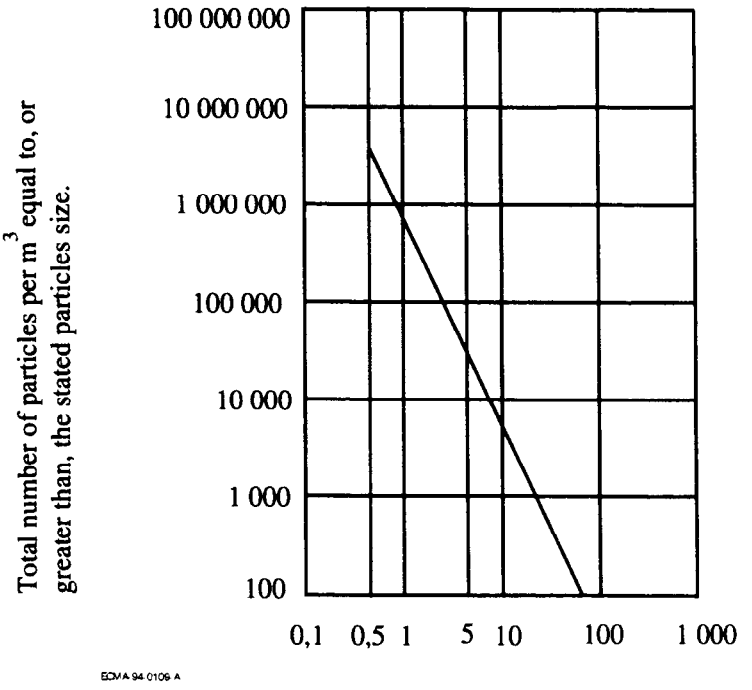


**Figure M.1 - Particle size distribution curve**



Copyright International Organization for Standardization
Provided by IHS under license with ISO
No reproduction or networking permitted without license from IHS
Not for Resale

# Annex N

**(normative)**

## Position of the cartridge relative to the reference planes

This annex shows the position of the cartridge relative to the reference planes, as specified in 10.2.

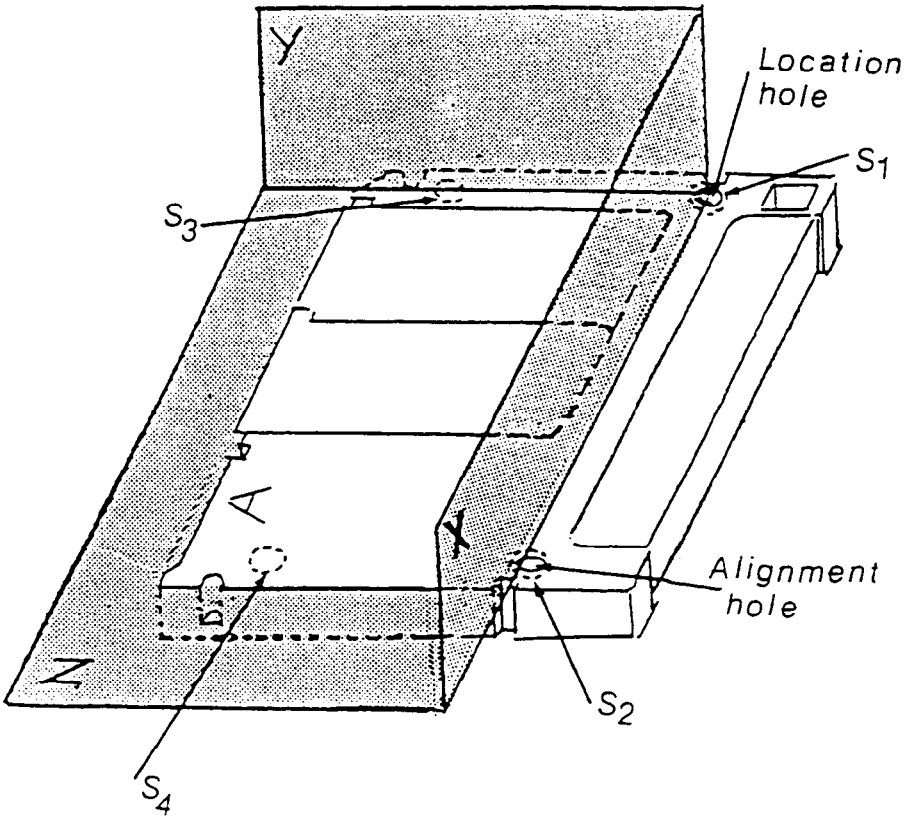


**Figure N.1 - Position of the cartridge**



Copyright International Organization for Standardization
Provided by IHS under license with ISO
No reproduction or networking permitted without license from IHS
Not for Resale

# Annex P

**(informative)**

# Transportation

## P.1 General

As transportation occurs under a wide range of temperature and humidity variations, for differing periods, by many methods of transport and in all parts of the world it is not possible to specify conditions for transportation or for packaging.

## P.2 Packaging

The form of packaging should be agreed between sender and recipient or, in the absence of such agreement, is the responsibility of the sender. It should take account of the following hazards.

### P.2.1 Temperature and humidity

Insulation and wrapping should be designed to maintain the conditions for storage over the estimated period of transportation.

### P.2.2 Impact loads and vibration

a) Avoid mechanical loads that would distort the shape of the cartridge.

b) Avoid dropping the cartridge.

c) Cartridges should be packed in a rigid box containing adequate shock-absorbent material.

d) The final box should have a clean interior and a construction that provides sealing to prevent the ingress of dirt and moisture.



Copyright International Organization for Standardization
Provided by IHS under license with ISO
No reproduction or networking permitted without license from IHS Not for Resale

# Annex Q

**(informative)**

## Office environment

Due to their construction and mode of operation optical disk cartridges have considerable resistance to the effects of dust particles around and inside the disk drive. Consequently it is not generally necessary to take special precaution to maintain a sufficiently low concentration of dust particles.

Operation in heavy concentrations of dust should be avoided, e.g. in a machine shop or on a building site.

Office environment implies an environment in which personnel may spend a full working day without protection and without suffering temporary or permanent discomfort.



Copyright International Organization for Standardization
Provided by IHS under license with ISO
No reproduction or networking permitted without license from IHS
Not for Resale

# Annex R

**(normative)**

## Relaxation by zones of the requirements for signals

Table R.1 shows the zones in which the requirements specified in the body of this International Standard shall be satisfied and those in which they are relaxed.

indicates the zones in which the values of the signals shall be within the range specified.

indicates the zones in which the range is extended from 80 % of the lower limit to 120 % of the upper limit. The requirement for uniformity is extended from ± 12 % to ± 20 %.

No marking indicates the zones for which the requirements are not applicable.

**Table R.1 - Requirements for signals in each zone**

| CLAUSE | SIGNAL | ZONES | | | | | | | | | | |
|---|---|---|---|---|---|---|---|---|---|---|---|---|
| | | INITIAL | ACQUIRE | | TEST | | CONTROL | DATA | CONTROL | TEST | | BUFFER |
| | | | LEAD | FOCUS | MFG. | DRIVE | | | | DRIVE | MFG. | |
| 11.5.4 | Reflectance | | | | | | | | | | | |
| 11.5.4 | Uniformity | | | | | | | | | | | |
| 21.1.a | Cross Track | | | | | | | | | | | |
| 21.1.b | Cross Track | | | | | | | | | | | |
| 21.2 | Cross Track Min. | | | | | | | | | | | |
| 21.3.a | PP | | | | | | | | | | | |
| 21.3.b | PP | | | | | | | | | | | |
| 21.4 | DPP (first) | | | | | | | | | | | |
| 21.4 | DPP (second) | | | | | | | | | | | |
| 21.5 | On Track | | | | | | | | | | | |
| 22.1 | SM | | | | | | | | | | | |
| 22.2 | $VFO_1$, $VFO_2$ | | | | | | | | | | | |
| 22.3 | AM, ID, PA | | | | | | | | | | | |
| 23 | Embossed Data | | | | | | | | | | | |
| 24.3.2 | Write Power | | | | | | | | | | | |
| 24.4.1 | Erase Power | | | | | | | | | | | |
| 25.1 | FOM | | | | | | | | | | | |
| 25.2 | Imbalance | | | | | | | | | | | |
| 26.1 | Resolution | | | | | | | | | | | |
| 26.2 | NBSN | | | | | | | | | | | |
| 26.3 | Cross Talk | | | | | | | | | | | |
| 27 | Erase Char. | | | | | | | | | | | |



Copyright International Organization for Standardization
Provided by IHS under license with ISO
No reproduction or networking permitted without license from IHS
Not for Resale

# Annex S

**(informative)**

## Values to be implemented in existing and future standards

This International Standard specifies values for bytes which identify optical cartridges which conform to this International Standard. It is expected that other types of optical disk cartridges will be developed in future. It is therefore recommended that the following values be used for these other cartridges.

## S.1 Byte 0 of the Control Track

Setting of bits 6 to 4:

000 should mean Constant Angular Velocity (CAV)
001 should mean Constant Linear Velocity (CLV)
010 should mean Zoned Constant Angular Velocity (ZCAV)
011 should mean Zoned Constant Linear Velocity (ZCLV)
110 should mean Logical Zoned Constant Angular Velocity (Logical ZCAV)

## S.2 Byte 7 of the Control Track

The following bit patterns should have the indicated meanings:

| | |
|---|---|
| 0000 0000 | Read-only ODCs (ROM) |
| 0001 0000 | Write-once ODCs |
| 0001 0001 | Write-once ODCs using MO recording |
| 0010 0000 | Rewritable ODCs using MO recording |
| 0011 0000 | Rewritable ODCs using Phase Change recording |
| 1001 0000 | Partial ROM of Write-once ODCs |
| 1010 0000 | Partial ROM of MO |
| 1011 0000 | Partial ROM of Phase Change |



Copyright International Organization for Standardization
Provided by IHS under license with ISO
No reproduction or networking permitted without license from IHS Not for Resale

© ISO/IEC

**ICS 35.220.30**

**Descriptors:** data processing, information interchange, data recording devices, optical disks, optical disk cartridges, specifications, dimensions, recording characteristics, track formats, optical properties, mechanical properties, tests.

Price based on 97 pages

Copyright International Organization for Standardization
Provided by IHS under license with ISO
No reproduction or networking permitted without license from IHS

Not for Resale