INTERNATIONAL STANDARD

ISO/IEC 13872

Second edition
2003-04-01

Information technology — Telecommunications and information exchange between systems — Private Integrated Services Network — Specification, functional model and information flows — Call Diversion supplementary services

Technologies de l'information — Télécommunications et échange d'information entre systèmes — Réseau privé à intégration de services — Spécification, modèle fonctionnel et débit d'information — Services supplémentaires de diversion

Reference number
ISO/IEC 13872:2003(E)

© ISO/IEC 2003

Copyright International Organization for Standardization
Provided by IHS under license with ISO
No reproduction or networking permitted without license from IHS

Not for Resale

PDF disclaimer

This PDF file may contain embedded typefaces. In accordance with Adobe's licensing policy, this file may be printed or viewed but shall not be edited unless the typefaces which are embedded are licensed to and installed on the computer performing the editing. In downloading this file, parties accept therein the responsibility of not infringing Adobe's licensing policy. The ISO Central Secretariat accepts no liability in this area.

Adobe is a trademark of Adobe Systems Incorporated.

Details of the software products used to create this PDF file can be found in the General Info relative to the file; the PDF-creation parameters were optimized for printing. Every care has been taken to ensure that the file is suitable for use by ISO member bodies. In the unlikely event that a problem relating to it is found, please inform the Central Secretariat at the address given below.

© ISO/IEC 2003

All rights reserved. Unless otherwise specified, no part of this publication may be reproduced or utilized in any form or by any means, electronic or mechanical, including photocopying and microfilm, without permission in writing from either ISO at the address below or ISO's member body in the country of the requester.

ISO copyright office
Case postale 56 • CH-1211 Geneva 20
Tel. + 41 22 749 01 11
Fax + 41 22 749 09 47
E-mail copyright@iso.org
Web www.iso.org

Published in Switzerland

Copyright International Organization for Standardization
Provided by IHS under license with ISO
No reproduction or networking permitted without license from IHS

© ISO/IEC 2003 — All rights reserved

Not for Resale

Contents

Foreword		**vii**
Introduction		**viii**
1	Scope	**1**
2	Conformance	**1**
3	Normative references	**1**
4	Terms and definitions	**2**
4.1	External definitions	**2**
4.2	Other definitions	**2**
4.2.1	Additional network feature	**2**
4.2.2	Busy	**2**
4.2.3	Call, basic call	**3**
4.2.4	Connected number	**3**
4.2.5	Call Deflection	**3**
4.2.6	Call Deflection from Alert	**3**
4.2.7	Call Deflection Immediate	**3**
4.2.8	Diversion	**3**
4.2.9	Diversion from Alert	**3**
4.2.10	Diversion Immediate	**3**
4.2.11	Diverted-to number	**3**
4.2.12	Diverted-to subaddress	**3**
4.2.13	Diverted-to user	**3**
4.2.14	Diverting cause	**3**
4.2.15	Diverting number	**3**
4.2.16	Forwarding	**3**
4.2.17	Forward switching	**3**
4.2.18	Last diverting user	**3**
4.2.19	Original called number	**4**
4.2.20	Original called user	**4**
4.2.21	Partial rerouteing	**4**
4.2.22	Presentation indicator	**4**
4.2.23	PISN number	**4**
4.2.24	Private	**4**
4.2.25	Public	**4**
4.2.26	Public ISDN	**4**
4.2.27	Rerouteing	**4**
4.2.28	Served user	**4**
4.2.29	Terminal, terminal equipment	**4**
4.2.30	User A	**4**
4.2.31	User B	**4**
4.2.32	User B1, user B2, user B3, etc.	**4**
4.2.33	User C	**4**
5	Acronyms	**5**
6	SS-CFU stage 1 specification	**6**
6.1	Description	**6**
6.1.1	General description	**6**
6.1.2	Qualifications on applicability to telecommunication services	**6**

© ISO/IEC 2003 – All rights reserved

Copyright International Organization for Standardization
Provided by IHS under license with ISO
No reproduction or networking permitted without license from IHS
Not for Resale

6.2 Procedures **6**

6.2.1 Provision/withdrawal **6**
6.2.2 Normal procedures **6**
6.2.3 Exceptional procedures **9**

6.3 Interactions with other supplementary services and ANFs **10**

6.3.1 Calling Line Identification Presentation (CLIP) **10**
6.3.2 Connected Line Identification Presentation (COLP) **10**
6.3.3 Calling/Connected Line Identification Restriction (CLIR) **10**
6.3.4 Calling Name Identification Presentation (CNIP) **11**
6.3.5 Connected Name Identification Presentation (CONP) **11**
6.3.6 Calling/Connected Name Identification Restriction (CNIR) **11**
6.3.7 Completion of Calls to Busy Subscriber (CCBS) **11**
6.3.8 Completion of Calls on No Reply (CCNR) **11**
6.3.9 Call Transfer (CT) **11**
6.3.10 Call Forwarding Busy (CFB) **11**
6.3.11 Call Forwarding No Reply (CFNR) **12**
6.3.12 Call Deflection (CD) **12**
6.3.13 Path Replacement (PR) **12**

6.4 Interworking considerations **12**

7 SS-CFB stage 1 specification **12**

7.1 Description **12**

7.1.1 General description **12**
7.1.2 Qualifications on applicability to telecommunication services **12**

7.2 Procedures **12**

7.2.1 Provision/withdrawal **12**
7.2.2 Normal procedures **12**
7.2.3 Exceptional procedures **12**

7.3 Interactions with other supplementary services and ANFs **13**

7.3.1 Calling Line Identification Presentation (CLIP) **13**
7.3.2 Connected Line Identification Presentation (COLP) **13**
7.3.3 Calling/Connected Line Identification Restriction (CLIR) **13**
7.3.4 Calling Name Identification Presentation (CNIP) **13**
7.3.5 Connected Name Identification Presentation (CONP) **13**
7.3.6 Calling/Connected Name Identification Restriction (CNIR) **13**
7.3.7 Completion of Calls to Busy Subscriber (CCBS) **13**
7.3.8 Completion of Calls on No Reply (CCNR) **13**
7.3.9 Call Transfer (CT) **13**
7.3.10 Call Forwarding Unconditional (CFU) **13**
7.3.11 Call Forwarding No Reply (CFNR) **13**
7.3.12 Call Deflection **13**
7.3.13 Path Replacement (PR) **13**

7.4 Interworking Considerations **14**

8 SS-CFNR stage 1 specification **14**

8.1 Description **14**

8.1.1 General description **14**
8.1.2 Qualifications on applicability to telecommunication services **14**

8.2 Procedures **14**

8.2.1 Provision/withdrawal **14**

© ISO/IEC 2003 – All rights reserved
Copyright International Organization for Standardization
Provided by IHS under license with ISO
No reproduction or networking permitted without license from IHS
Not for Resale

8.2.2 Normal procedures **14**
8.2.3 Exceptional Procedures **14**

8.3 Interactions with other supplementary services and ANFs **15**

8.3.1 Calling Line Identification Presentation (CLIP) **15**
8.3.2 Connected Line Identification Presentation (COLP) **15**
8.3.3 Calling/Connected Line Identification Restriction (CLIR) **15**
8.3.4 Calling Name Identification Presentation (CNIP) **15**
8.3.5 Connected Name Identification Presentation (CONP) **15**
8.3.6 Calling/Connected Name Identification Restriction (CNIR) **15**
8.3.7 Completion of Calls to Busy Subscriber (CCBS) **15**
8.3.8 Completion of Calls on No Reply (CCNR) **15**
8.3.9 Call Transfer (CT) **16**
8.3.10 Call Forwarding Unconditional (CFU) **16**
8.3.11 Call Forwarding Busy (CFB) **16**
8.3.12 Call Deflection (CD) **16**
8.3.13 Path Replacement (PR) **16**

8.4 Interworking Considerations **16**

9 SS-CD stage 1 specification **16**

9.1 Description **16**

9.1.1 General description **16**
9.1.2 Qualifications on applicability to telecommunication services **16**

9.2 Procedures **16**

9.2.1 Provision/withdrawal **16**
9.2.2 Normal procedures **16**
9.2.3 Exceptional Procedures **17**

9.3 Interaction with other supplementary services and ANFs **17**

9.3.1 Calling Line Identification Presentation (CLIP) **17**
9.3.2 Connected Line Identification Presentation (COLP) **17**
9.3.3 Calling/Connected Line Identification Restriction (CLIR) **18**
9.3.4 Calling Name Identification Presentation (CNIP) **18**
9.3.5 Connected Name Identification Presentation (CONP) **18**
9.3.6 Calling/Connected Name Identification Restriction (CNIR) **18**
9.3.7 Completion of Calls to Busy Subscriber (CCBS) **18**
9.3.8 Completion of Calls on No Reply (CCNR) **18**
9.3.9 Call Transfer (CT) **18**
9.3.10 Call Forwarding Unconditional (CFU) **18**
9.3.11 Call Forwarding on Busy (CFB) **18**
9.3.12 Call Forwarding on No Reply (CFNR) **18**
9.3.13 Path Replacement (PR) **18**

9.4 Interworking considerations **18**
9.5 Overall SDL **18**

10 SS-DIV stage 2 specification **22**

10.1 Functional model **22**

10.1.1 Functional model description **22**
10.1.2 Description of the functional entities **23**
10.1.3 Relationship of functional model to basic call functional model **24**

10.2 Information flows **26**

10.2.1 Definition of information flows **26**
10.2.2 Examples of information flow sequences **35**

© ISO/IEC 2003 – All rights reserved

Copyright International Organization for Standardization
Provided by IHS under license with ISO
No reproduction or networking permitted without license from IHS
Not for Resale

10.3 Functional entity actions **53**

10.3.1 Functional entity actions of FE1 **53**
10.3.2 Functional entity actions of FE2 **53**
10.3.3 Functional entity actions of FE3 **53**
10.3.4 Functional entity actions of FE4 **54**
10.3.5 Functional entity actions of FE5 **54**
10.3.6 Functional entity actions of FE6 **55**
10.3.7 Functional entity actions of FE7 **55**
10.3.8 Functional entity actions of FE8 **55**
10.3.9 Functional entity actions of FE9 **55**

10.4 Functional entity behaviour **55**

10.4.1 Behaviour of FE1 **55**
10.4.2 Behaviour of FE2 **56**
10.4.3 Behaviour of FE3 **58**
10.4.4 Behaviour of FE4 **60**
10.4.5 Behaviour of FE5 **64**
10.4.6 Behaviour of FE6 **65**
10.4.7 Behaviour of FE7 **67**
10.4.8 Behaviour of FE8 **68**
10.4.9 Behaviour of FE9 **69**

10.5 Allocation of functional entities to physical equipment **70**
10.6 Interworking considerations **71**

Annex A - Bibliography **72**

© ISO/IEC 2003 – All rights reserved
Copyright International Organization for Standardization
Provided by IHS under license with ISO
No reproduction or networking permitted without license from IHS
Not for Resale

Foreword

ISO (the International Organization for Standardization) and IEC (the International Electrotechnical Commission) form the specialized system for worldwide standardization. National bodies that are members of ISO or IEC participate in the development of International Standards through technical committees established by the respective organization to deal with particular fields of technical activity. ISO and IEC technical committees collaborate in fields of mutual interest. Other international organizations, governmental and non-governmental, in liaison with ISO and IEC, also take part in the work. In the field of information technology, ISO and IEC have established a joint technical committee, ISO/IEC JTC 1.

International Standards are drafted in accordance with the rules given in the ISO/IEC Directives, Part 2.

The main task of the joint technical committee is to prepare International Standards. Draft International Standards adopted by the joint technical committee are circulated to national bodies for voting. Publication as an International Standard requires approval by at least 75 % of the national bodies casting a vote.

Attention is drawn to the possibility that some of the elements of this document may be the subject of patent rights. ISO and IEC shall not be held responsible for identifying any or all such patent rights.

ISO/IEC 13872 was prepared by ECMA (as ECMA-173) and was adopted, under a special “fast-track procedure”, by Joint Technical Committee ISO/IEC JTC 1, *Information technology*, in parallel with its approval by national bodies of ISO and IEC.

This second edition cancels and replaces the first edition (ISO/IEC 13872:1995), which has been technically revised.

© ISO/IEC 2003 – All rights reserved

Copyright International Organization for Standardization
Provided by IHS under license with ISO
No reproduction or networking permitted without license from IHS
Not for Resale

Introduction

This International Standard is one of a series of Standards defining services and signalling protocols applicable to Private Integrated Services Networks (PISNs). The series uses ISDN concepts as developed by ITU-T and conforms to the framework of International Standards for Open Systems Interconnection as defined by ISO/IEC.

This International Standard specifies the Call Diversion supplementary services:

- Call Forwarding Unconditional (SS-CFU)
- Call Forwarding Busy (SS-CFB)
- Call Forwarding No Reply (SS-CFNR)
- Call Deflection (SS-CD)

This International Standard is based upon the practical experience of ECMA member companies and the results of their active and continuous participation in the work of ISO/IEC JTC 1, ITU-T, ETSI and other international and national standardization bodies. It represents a pragmatic and widely based consensus.

--`,,`-`-`,,`,,`,`,,`---

© ISO/IEC 2003 – All rights reserved
Copyright International Organization for Standardization
Provided by IHS under license with ISO
No reproduction or networking permitted without license from IHS
Not for Resale

Information technology — Telecommunications and information exchange between systems — Private Integrated Services Network — Specification, functional model and information flows — Call Diversion supplementary services

1 Scope

This International Standard specifies the supplementary services Call Forwarding Unconditional (CFU), Call Forwarding Busy (CFB), Call Forwarding No Reply (CFNR) and Call Deflection (CD), which are applicable to various basic services supported by Private Integrated Services Networks (PISN). Basic services are specified in ISO/IEC 11574.

SS-CFU, SS-CFB and SS-CFNR are supplementary services which apply during call establishment providing a diversion of an incoming call to an other destination. SS-CD is a supplementary service which allows a served user to respond to an incoming call by requesting redirection of that call to another number specified in the response.

Supplementary service specifications are produced in three stages, according to the method described in ETS 300 387. This International Standard contains the stage 1 and stage 2 specifications of the Call Diversion supplementary services. The stage 1 specifications (clauses 6, 7, 8 and 9) specify the supplementary services as seen by users of PISNs. The stage 2 specification (clause 10) identifies the functional entities involved in the supplementary services and the information flows between them.

2 Conformance

In order to conform to this International Standard, a stage 3 standard shall specify signalling protocols and equipment behaviour that are capable of being used in a PISN which supports the supplementary services specified in this International Standard. This means that, to claim conformance, a stage 3 standard is required to be adequate for the support of those aspects of clauses 6, 7, 8 and 9 (stage 1) and clause 10 (stage 2) which are relevant to the interface or equipment to which the stage 3 standard applies.

A stage 3 standard for SS-CFU shall support clauses 6 and 10 respectively.

A stage 3 standard for SS-CFB shall support clauses 7 and 10 respectively.

A stage 3 standard for SS-CFNR shall support clauses 8 and 10 respectively.

A stage 3 standard for SS-CD shall support clauses 9 and 10 respectively.

3 Normative references

The following referenced documents are indispensable for the application of this document. For dated references, only the edition cited applies. For undated references, the latest edition of the referenced document (including any amendments) applies.

ISO/IEC 11571:1998, *Information technology - Telecommunications and information exchange between systems - Private Integrated Services Networks - Addressing*

ISO/IEC 11574:2000, *Information technology - Telecommunications and information exchange between systems - Private Integrated Services Network - Circuit-mode 64 kbit/s bearer services - Service description, functional capabilities and information flows*

ISO/IEC 11579-1:1994, *Information technology - Telecommunications and information exchange between systems - Private integrated services network - Part 1: Reference configuration for PISN Exchanges (PINX)*

ISO/IEC 13864:1995, *Information technology - Telecommunications and information exchange between systems - Private Integrated Services Network - Specification, functional model and information flows - Name identification supplementary services*

ISO/IEC 14136:1995, *Information technology - Telecommunications and information exchange between systems - Private Integrated Services Network - Specification, functional model and information flows - Identification supplementary services*

© ISO/IEC 2003 – All rights reserved

Copyright International Organization for Standardization
Provided by IHS under license with ISO
No reproduction or networking permitted without license from IHS
Not for Resale

ETS 300 387:1994, *Private Telecommunication Network (PTN); Method for the specification of basic and supplementary services*

ITU-T Rec. I.112:1993, *Vocabulary of terms for ISDNs*

ITU-T Rec. I.210:1993, *Principles of telecommunication services supported by an ISDN and the means to describe them*

ITU-T Rec. Z.100:1999, *Specification and description language (SDL)*

4 Terms and definitions

For the purposes of this document, the following terms and definitions apply.

4.1 External definitions

This International Standard uses the following terms defined in other documents:

– Basic Service (ITU-T Rec. I.210)

– Connection (ITU-T Rec. I.112)

– Integrated Services Digital Network (ITU-T Rec. I.112)

– Service (ITU-T Rec. I.112)

– Signalling (ITU-T Rec. I.112)

– Supplementary Service (ITU-T Rec. I.210)

– Private Integrated services Network eXchange (PINX) (ISO/IEC 11579-1)

– Private Integrated Services Network (PISN) (ISO/IEC 11579-1)

– User (ISO/IEC 11574)

This International Standard refers to the following basic call functional entities (FEs) defined in ISO/IEC 11574:

– Call Control (CC)

– Call Control Agent (CCA)

This International Standard refers to the following basic call inter-FE relationships defined in ISO/IEC 11574:

– r1

– r2

– r3

This International Standard refers to the following basic call information flows defined in ISO/IEC 11574:

– DISCONNECT request/indication

– REPORT request/indication

– RELEASE request/indication

– SETUP request/indication

– SETUP response/confirmation

– SETUP REJECT request/indication

4.2 Other definitions

4.2.1 Additional network feature

An Additional network feature (ANF) is a capability, over and above that of a basic service, provided by a PISN, but not directly to a PISN user.

4.2.2 Busy

An ISDN destination is considered to be busy if either a "network determined user busy" or a "user determined user busy" condition exists.

© ISO/IEC 2003 – All rights reserved
Copyright International Organization for Standardization
Provided by IHS under license with ISO
No reproduction or networking permitted without license from IHS
Not for Resale

4.2.3 Call, basic call

A call or basic call is an instance of the use of a basic service.

4.2.4 Connected number

The number of the user that answers (User C).

4.2.5 Call Deflection

Call deflection is the type of diversion invoked by a served user's request.

4.2.6 Call Deflection from Alert

Call Deflection from Alert (CDA) is the type of diversion invoked by a served user's request during the alerting phase of an incoming call.

4.2.7 Call Deflection Immediate

Call Deflection Immediate (CDI) is the type of diversion invoked by a served user's request immediately after the receipt of an incoming call.

4.2.8 Diversion

Diversion is the redirection of a call, on behalf of a called user and prior to answer, to a number different from the number of that called user.

4.2.9 Diversion from Alert

Diversion from Alert is the type of diversion invoked from an alerting state.

NOTE - Diversion from Alert can occur as a result of the supplementary services CFNR and CD as specified in this International Standard.

4.2.10 Diversion Immediate

Diversion Immediate is the type of diversion invoked prior to reaching the alerting state.

NOTE - Diversion Immediate can occur as a result of the supplementary services CFB, CFU and CD as specified in this International Standard.

4.2.11 Diverted-to number

The diverted-to number is the number to which a call is diverted.

4.2.12 Diverted-to subaddress

The diverted-to subaddress is the subaddress to which a call is diverted.

4.2.13 Diverted-to user

The diverted-to user is the user to which a call is diverted.

4.2.14 Diverting cause

The diverting cause is a parameter which contains the reason for the diversion: CD, CFU, CFB, CFNR.

4.2.15 Diverting number

The diverting number is the number of the served user.

4.2.16 Forwarding

Forwarding is the type of diversion invoked automatically by the network in accordance with information previously registered in the network against the called number.

4.2.17 Forward switching

A network routeing algorithm which performs the diversion by joining together the first connection from User A's node to User B's node and a second, new connection from User B's node to User C's node.

4.2.18 Last diverting user

The last diverting user is the served user from the point of view of the diverted-to user for a particular stage of call diversion. In the case of a call subject to a single stage of call diversion, User B is the last diverting user from the point of view of User C. In the case of a call subject to multiple stages of call diversion, user B1 is the last diverting user from the point of view of user B2, user B2 is the last diverting user from the point of view of user B3, etc. The served user for the final stage of call diversion is the last diverting user from the point of view of User C.

© ISO/IEC 2003 – All rights reserved

Copyright International Organization for Standardization
Provided by IHS under license with ISO
No reproduction or networking permitted without license from IHS
Not for Resale

4.2.19 Original called number

The original called number is the number of User B (in case of multiple call diversion user B1).

4.2.20 Original called user

The original called user is the first served user of a call which is subject to one or more stages of call diversion, i.e. User B or B1.

4.2.21 Partial rerouteing

A network routeing algorithm which performs the call diversion by replacing a particular part of the connection from User A's node (located in the public ISDN) to User B's node (located in a PISN) by another connection from User A's node to User C's node (located in the public ISDN). The new connection is established completely within the public ISDN by joining together the original connection from User A's node to the public ISDN gateway node and a second, new connection from the public ISDN gateway node to User C's node.

4.2.22 Presentation indicator

The presentation indicator is the indicator showing whether the diverted-to number should be presented to the calling user, as derived from User C's COLR supplementary service.

4.2.23 PISN number

A PISN number is a number belonging to a PISN numbering plan (E.164 ISDN/Private/Implicit numbering plan) specified in ISO/IEC 11571.

4.2.24 Private

An attribute indicating that the application of the so qualified item, e.g. a network, a unit of equipment, a service, is offered to or is in the interest of a determined set of users.

4.2.25 Public

An attribute indicating that the application of the so qualified item, e.g. a network, a unit of equipment, a service, is offered to the general public.

4.2.26 Public ISDN

A public telecommunication network which supports ISDN services between any two T-reference points.

4.2.27 Rerouteing

A network routeing algorithm which performs the call diversion by replacing the connection from User A's node to User B's node by another connection from User A's node to User C's node.

4.2.28 Served user

The served user is the user of a particular PISN number who is requesting that calls to his number be diverted. This user may also be referred to as the diverting user or the called user.

4.2.29 Terminal, terminal equipment

An item of equipment attached to a telecommunication network to provide access for a user to one or more services.

4.2.30 User A

User A is the calling user of a call which is subject to call diversion.

4.2.31 User B

User B is the served (diverting) user of a call which is subject to call diversion.

4.2.32 User B1, user B2, user B3, etc.

These are the served (diverting) users of a call which are subject to multiple stages of diversion. B1 is the first served user, B2 is the second served user, B3 is the third served user, etc.

NOTE - B2 is also the diverted-to user with respect to the first stage of call diversion, B3 is also the diverted-to user with respect to the second stage of call diversion, etc.

4.2.33 User C

User C is the diverted-to user with respect to the final stage of call diversion.

© ISO/IEC 2003 – All rights reserved
Copyright International Organization for Standardization
Provided by IHS under license with ISO
No reproduction or networking permitted without license from IHS
Not for Resale

5 Acronyms

ANF	Additional Network Feature
CC	Call Control (functional entity)
CCA	Call Control Agent (functional entity)
CDA	Call Deflection from Alert
CDI	Call Deflection Immediate
CLIP	Calling Line Identification Presentation
CLIR	Calling/Connected Line Identification Restriction
CNIP	Calling Name Identification Presentation
CNIR	Calling/Connected Name Identification Restriction
COLP	Connected Line Identification Presentation
CONP	Connected Name Identification Presentation
DIVA	Diversion from Alert
DIVI	Diversion Immediate
DTN	Diverted-to number
FE	Functional Entity
ISDN	Integrated Services Digital Network
MSN	Multiple Subscriber Number
NDUB	Network Determined User Busy
NSO	Notification Subscription Option
PINX	Private Integrated services Network eXchange
PISN	Private Integrated Services Network
SDL	Specification and Description Language
SS-CD, CD	Call Deflection supplementary service
SS-CF, CF	Call Forwarding supplementary services
SS-CFB, CFB	Call Forwarding Busy supplementary service
SS-CFNR, CFNR	Call Forwarding No Reply supplementary service
SS-CFU, CFU	Call Forwarding Unconditional supplementary service
SS-DIV, DIV	Call Diversion supplementary services
TE	Terminal Equipment
UDUB	User Determined User Busy

© ISO/IEC 2003 – All rights reserved

Copyright International Organization for Standardization
Provided by IHS under license with ISO
No reproduction or networking permitted without license from IHS
Not for Resale

6 SS-CFU stage 1 specification

6.1 Description

6.1.1 General description

SS-CFU enables a served user to have the PISN redirect to another user calls which are addressed to the served user's PISN number. SS-CFU may operate on all calls or just those associated with specified basic services. The served user's ability to originate calls is unaffected by SS-CFU. After CFU has been activated calls are forwarded independently of the status of the served user.

CFU is provided on a per PISN number basis.

The maximum number of diversions to a single call is an implementation option. When counting the number of diversions, all types of diversions shall be included.

6.1.2 Qualifications on applicability to telecommunication services

This supplementary service is applicable to all basic services defined in ISO/IEC 11574.

6.2 Procedures

6.2.1 Provision/withdrawal

Provision and withdrawal of CFU shall be by pre-arrangement with the service provider. CFU subscription shall be on a per PISN number basis. For each PISN number, the supplementary service may be subscribed to collectively for all basic services subscribed to at that PISN number or for only some of the basic services subscribed to at that PISN number.

The subscription parameters and values offered by a PISN are an implementation matter. A stage 3 standard shall support the parameters and values specified in table 1. A PISN may offer more or less parameters and values than those specified in table 1.

Parameters apply separately to each basic service subscribed to on each PISN number. For each subscription parameter only one value is selectable.

Table 1 - Subscription options

Subscription Parameter	Value
Served user receives notification that call has been diverted	- No - Yes
Calling user receives notification that call has been diverted	- No - Yes without diverted-to number/name - Yes with diverted-to number/name
Served user releases his/her number/name to diverted to user	- No - Yes

6.2.2 Normal procedures

6.2.2.1 Activation/deactivation/registration/interrogation

CFU may be either permanently activated or activated/deactivated under user control. If activation/deactivation is under user control, the PISN may optionally provide for activation/deactivation by the served user (local activation/deactivation), by another user (remote activation/ deactivation) or both.

The PISN may provide interrogation, which can be local, remote or both.

Registration of information is performed on activation of CFU. There are no separate registration procedures.

6.2.2.1.1 Local activation/deactivation

The served user shall be able to activate CFU separately for each basic service for which CFU is subscribed to and thereby request a different diverted-to number and/or subaddress for each basic service for which CFU is subscribed to, and/or shall be able to activate CFU for all basic services for which CFU is subscribed to.

To activate CFU, the served user shall supply:

1. the diverted-to number, which may be accompanied by a diverted-to subaddress;

--`,,,`-`-`,,`,,`,`,,`---

© ISO/IEC 2003 – All rights reserved
Copyright International Organization for Standardization
Provided by IHS under license with ISO
No reproduction or networking permitted without license from IHS
Not for Resale

2. information as to whether CFU is to apply to all basic services for which CFU is subscribed to or to a specified basic service out of the basic services for which CFU is subscribed to;

3. where there is more than one PISN number assigned to the access (i.e. in the context of an MSN arrangement), the PISN number for which CFU shall apply.

Verification that the diverted-to number exists and that the specified basic service is subscribed to at that number may be carried out before accepting the CFU activation request.

The service provider shall return notification of acceptance of the request. Notification of acceptance shall include the number of the diverted-to user to whom the CFU is active.

If a single number is used by more than one terminal, activation/deactivation of CFU shall be possible from any terminal which uses this number. When the served user has more than one compatible terminal for the basic service(s) specified at activation time, notification of successful activation/deactivation shall be sent to all the compatible terminals.

In the absence of any of the parameters in the activation procedure (e.g. the diverted-to number), default parameters already known to the PISN may be used.

It shall be possible to deactivate CFU by means of an explicit request for deactivation. An explicit request for deactivation shall be treated as follows:

– if deactivation of CFU for an individual basic service is requested, it shall be accepted only if CFU is already activated for that basic service and shall result in the discarding of the diverted-to number and diverted-to subaddress;

– if deactivation of CFU collectively for all basic services is requested, it shall result in the discarding of any diverted-to numbers and diverted-to subaddresses for individual basic services and any diverted-to number and diverted-to subaddress collectively for all basic services.

It shall be possible to deactivate CFU by activating CFU to a different diverted-to number and/or diverted-to subaddress. A request for activation of CFU when CFU is already activated shall be treated as follows:

– if activation of CFU for an individual basic service is requested, it shall be accepted only if CFU is not already activated collectively for all basic services and, if CFU is already activated for that individual basic service, shall result in the overwriting of the existing diverted-to number and diverted-to subaddress;

– if activation of CFU collectively for all basic services is requested, it shall result in the discarding of any existing diverted-to numbers and diverted-to subaddresses for individual basic services and the overwriting of any existing diverted-to number and diverted-to subaddress collectively for all basic services.

6.2.2.1.2 Remote activation/deactivation

Remote activation/deactivation of CFU shall use one or more of the following procedures:

1. A special authorized user may activate and/or deactivate CFU at the served user. Authorization shall be implementation dependent (e.g. attendants may be authorized).

2. A user may activate CFU at the served user such that the activating user becomes the diverted-to user, subject to the served user having remote activation enabled in advance. The intended diverted-to user shall be able to activate CFU regardless of whether CFU is already active. The served user may disable a remote activation at any time. If the disable procedure is performed whilst CFU is activated, the CFU shall not be automatically deactivated. The enable and disable procedure may be performed either by the served user or by an implementation specific entity.

3. The diverted-to user may deactivate CFU at the served user. This shall not be dependent on whether the served user has enabled remote activation. The diverted-to user shall lose this capability as soon as CFU is deactivated in this way, and shall not regain the capability if CFU is activated again to a different diverted-to user.

4. The diverted-to user, at the same time as deactivating CFU in accordance with item 3. above, may be able to activate CFU from the served user to another diverted-to user (i.e. change the destination of CFU). The diverted-to user shall lose this capability as soon as CFU is reactivated in this way. The new diverted-to user shall gain the capability.

When a remote activation/deactivation procedure is performed successfully, the served user and the activating/ deactivating user shall be notified. The notification to the served user shall include the number of the diverted-to user and the basic service.

It shall be possible, that the served user activates CFU and the remote user deactivates CFU and vice versa.

NOTE - The use of a password facility for remote activation as an implementation option is not excluded.

© ISO/IEC 2003 – All rights reserved

Copyright International Organization for Standardization
Provided by IHS under license with ISO
No reproduction or networking permitted without license from IHS
Not for Resale

6.2.2.1.3 Local interrogation

If local interrogation is provided, a PISN shall support interrogation on a per number basis for all basic services and/or for a user specified basic service. Where there is more than one PISN number assigned to the access (i.e. in the context of an MSN arrangement), the user shall apply the PISN number for which interrogation of CFU is required. The PISN response to an interrogation request shall provide the following information to the user:

- activated or deactivated state of the supplementary service,
- if activated:
  - diverted-to number and, if applicable, diverted-to subaddress
  - whether activated for all basic services or an individual basic service and the identity of the individual basic service.

As additional information, the interrogation may provide information to the served user, whether remote activation has been enabled (allowed).

Where interrogation is for all basic services for which CFU is subscribed to and CFU has been activated separately for more than one basic service, the above information shall be repeated for each activation.

6.2.2.1.4 Remote interrogation

If remote interrogation is provided, it shall be possible from one or both of the following remote users:

1. A special authorized user may interrogate CFU conditions on the served user. Authorization shall be implementation dependent (e.g. attendants may be authorized).
2. The diverted-to user may interrogate CFU at the served user.

The remote interrogation request and response shall include the information as specified for local interrogation and additionally the PISN number of the served user.

6.2.2.2 Invocation and operation

All incoming calls indicating a basic service for which CFU is active shall be diverted without being presented to the served user.

6.2.2.2.1 Served user notification

The served user, as a subscription option, may receive notification of the diversion (but will not be able to answer the incoming call). This notification shall be given as soon as the PISN originates the call to the diverted-to user and shall include the following information (on the call that has been diverted):

1. Indication that a call has been forwarded and the reason (CFU);
2. Bearer Capability information and, if available, High Layer Compatibility information and Low Layer Compatibility information;
3. User B's number (applicable in the context of an MSN arrangement);

If a previous diversion has occurred, the notification shall include in addition:

4. last diverting user's number, if presentation is permitted by the last diverting user;
5. cause for last diversion.

If more than one previous diversion has occurred, the notification shall also include:

6. original called user's number, if presentation is permitted by the original called user;
7. cause for original diversion

6.2.2.2.2 Diverted-to user notification

The diverted-to user shall receive an indication that the call has been diverted with the appropriate diversion cause. According to the served user's subscription option, the diverted-to user may receive the served user's number.

If multiple diversion has occurred, the diverted-to user may receive the original called user's number and the last diverting user's number, according to subscription options at those two users. When multiple diversion occurs, the diverted-to user may receive the reason for the original diversion as well as for the last diversion.

© ISO/IEC 2003 – All rights reserved
Copyright International Organization for Standardization
Provided by IHS under license with ISO
No reproduction or networking permitted without license from IHS
Not for Resale

The notification to the diverted-to user may, provided the subscription options allow, additionally include the identification of the served user's name (in case of multiple diversion the name of the original called user and of the last diverting user).

6.2.2.2.3 Calling user notification

As a subscription option of the served user, the calling user may receive a notification that the call has been diverted and as an additional option that notification may include the diverted-to user's number.

For single diversion, notifications shall be sent to the calling user depending on the subscription option of the served user as follows:

- If "No", no notification shall be sent to User A.
- If "Yes, without diverted-to number/name", a notification without number/name shall be sent to User A.
- If "Yes, with diverted-to number/name", a notification with User C's number and optionally the User C's name shall be sent to User A if CLIR/CNIR is not invoked by User C.

For multiple diversions, notifications shall be sent to the calling user depending on the subscription options of the served users as follows:

- If user B1 has "No", no notification shall be sent to User A.
- If user B1 does not have "No", a notification shall be sent to User A as a result of the diversion at user B1. Diversions at successive served users B2, B3, etc. each shall also result in a notification to User A, but only if both
  - the alerting state has been reached at the served user, and
  - none of the served users has the "No" option.

The number and optionally the name of User C shall be sent to User A, but only if both

- all served users have "Yes, with diverted-to number/name", and
- CLIR/CNIR is not invoked by User C.

In addition, the number and optionally the name of a user Bn may be sent to User A, if the alerting state has been reached at user Bn, if all users B1 to Bn-1 have "Yes, with diverted-to number/name", and if there is no possibility of CLIR/CNIR being invoked at user Bn.

6.2.3 Exceptional procedures

6.2.3.1 Activation/deactivation

If the PISN cannot accept an activation request, the activating user shall receive a notification that CFU activation was unsuccessful. Possible causes for rejection are e.g.:

– service or option not subscribed to,

– insufficient information,

– diverted-to number is a special service code (e.g. police),

– diverted-to number is the served user's number,

– diverted-to number is an invalid PISN number,

– basic service to which relevance is requested is not subscribed to,

– incorrect served user's number.

If the PISN cannot accept a deactivation request, the deactivating user shall receive a notification that CFU deactivation was unsuccessful. Possible causes for rejection are e.g.:

– service or option not subscribed to,

– insufficient information,

– service not activated,

– incorrect served user's number.

© ISO/IEC 2003 – All rights reserved

Copyright International Organization for Standardization
Provided by IHS under license with ISO
No reproduction or networking permitted without license from IHS
Not for Resale

In case of remote activation/deactivation the notification of an unsuccessful activation/deactivation request shall be sent to the activating/deactivating user only.

6.2.3.2 Interrogation

If the PISN cannot accept an interrogation request, the interrogating user shall receive a notification that CFU interrogation was unsuccessful. Possible causes for rejection are e.g.:

– service or option not subscribed to,

– insufficient information,

– basic service to which relevance is requested is not subscribed to.

6.2.3.3 Invocation and operation

CFU shall not be invoked on a call to the served user if the call uses a basic service for which CFU has not been activated.

In cases where a calling user normally receives, as part of notification, the number of the diverted-to user, the last diverting user or the original called user and this number is unavailable (e.g. due to number presentation restriction, or interworking), the user who would have been given the number shall receive an indication of the reason why no number is given.

In cases where a calling user normally receives, as part of notification, the name of the diverted-to user, the last diverting user or the original called user and this name is unavailable (e.g. due to name presentation restriction, or interworking), the user who would have been given the name shall receive an indication of the reason why no number is given.

Within a PISN the total number of all diversions for each call shall be limited. The maximum number of such diversions for each call shall be an implementation option. When counting the number of diversions, all types of diversions shall be included. If the limit is reached and an attempt is made to divert the call an additional time, either the calling user shall receive call clearing with an appropriate cause or further diversions shall be overridden by offering the call to the served user.

If the diverted call cannot be completed to the diverted-to destination, then the PISN shall clear the call. Specifically, if CFU has been invoked and CFNR has not occurred previously during the call setup, then the call shall be cleared back towards the calling user and to the calling user shall be sent an indication that the call cannot be completed. This indication shall not reveal that the call has been diverted. If CFNR has previously occurred, then the procedures for the failure of CFNR shall apply.

The diversion may be overridden for specific calls, e.g. calls from the diverted-to user to the diverting user. The conditions for this shall be implementation specific.

6.3 Interactions with other supplementary services and ANFs

Interactions with other supplementary services and ANFs for which PISN standards were available at the time of publication of this International Standard are specified below.

6.3.1 Calling Line Identification Presentation (CLIP)

Served user: If subscribed to, the served user shall receive, as part of the served user notification of diversion, the Calling Line Identification of the diverted call, unless CLIR applies and the served user has no override capability.

Diverted-to users, who have subscribed to CLIP shall receive the calling user's number unless CLIR applies and the diverted-to user has no override capability.

6.3.2 Connected Line Identification Presentation (COLP)

If the served user, or any served user in the case of multiple diversions, subscribes to the option that the calling user is not notified of diversion, then the calling user shall not be provided with COLP, unless the calling user has override capability.

If the served user, or any served user in the case of multiple diversions, subscribes to the option that the calling user is notified, but without the diverted-to user number, then the calling user shall not be provided with COLP, unless the calling user has an overide capability.

6.3.3 Calling/Connected Line Identification Restriction (CLIR)

When diversion occurs, the number of a calling PISN user which has invoked CLIR, shall not be presented to the diverting user or the diverted-to user, unless the diverting user or diverted-to user has the service profile to override this restriction.

A diverted-to user which has invoked CLIR shall not have its number presented to the calling user, either as CONP or as part of a notification of diversion, unless the calling user has an override service profile. A diverted-to user which is provided with CLIR temporary mode shall not have its identity revealed to the calling user as part of a notification of call diversion until the

--`,,,`-`-`,,`,,`,`,,`---
© ISO/IEC 2003 – All rights reserved
Copyright International Organization for Standardization
Provided by IHS under license with ISO
No reproduction or networking permitted without license from IHS
Not for Resale

diverted-to user has responded and it is known that restriction is not to be invoked, unless the calling user has an override service profile.

NOTE - The diverted-to user's number can still be released on answer, after confirmation, or using the default.

In each of the above situations, a calling user that subscribes to COLP and who has override capability shall not be able to receive the diverted-to user's number as part of the diverting notification information, but can invoke COLP with override in order to receive the connected line identity when the call is answered.

6.3.4 Calling Name Identification Presentation (CNIP)

Diverted-to users who have subscribed to CNIP shall receive the calling user's name unless CNIR has been invoked and the diverted-to user has no override capability. In addition, unless restriction applies and the served user has no override capability, the served user (or users if the call is diverted more than once) shall receive the name of the calling user as part of any notification to the served user that a call has been diverted.

6.3.5 Connected Name Identification Presentation (CONP)

If the served user, or any served user in the case of multiple diversions, subscribes to the option that the calling user is not notified of diversion, then the calling user shall not be provided with CONP, unless the calling user has override capability.

If the served user, or any served user in the case of multiple diversions, subscribes to the option that the calling user is notified, but without the diverted-to user number/name, then the calling user shall not be provided with CONP, unless the calling user has an overide capability.

In all other cases, the provision of the diverted-to user's name shall be in accordance with CONP.

6.3.6 Calling/Connected Name Identification Restriction (CNIR)

When diversion occurs, the name of a calling PISN user which has invoked CNIR shall not be presented to the diverting user or the diverted-to user, unless the diverting user or diverted-to user has the service profile to override this restriction.

A diverted-to user which has invoked CNIR shall not have its name presented to the calling user, either as CONP or as part of a notification of diversion, unless the calling user has an override service profile. A diverted-to user which is provided with CNIR temporary mode shall not have its identity revealed to the calling user as part of a notification of call diversion until the diverted-to user has responded and it is known that restriction is not to be invoked, unless the calling user has an override service profile.

NOTE - The invocation of CNIR at the diverting user has no impact on Call Diversion.

6.3.7 Completion of Calls to Busy Subscriber (CCBS)

If the call to User B is diverted to User C by CFU and User C is busy, then a CCBS request from User A shall be applied to the diverted-to User C.

If User B activates CFU after User A has requested CCBS and whilst the CCBS recall has not yet been accepted by User A, then the CCBS request shall either continue to be applied to User B or be cancelled.

If a user invokes CCBS whilst CFU is activated, or a user invokes CCBS and subsequently activates CFU, CCBS Recall shall still be given to that user.

6.3.8 Completion of Calls on No Reply (CCNR)

If the call to User B is diverted to User C by CFU and User C does not answer, then a CCNR request from User A shall be applied to the diverted-to User C.

If User B activates CFU after User A has requested CCNR and whilst the CCNR recall has not yet been accepted by User A, then the CCNR request shall either continue to be applied to User B or be cancelled.

If a user invokes CCNR whilst CFU is activated, or a user invokes CCNR and subsequently activates CFU, CCNR Recall shall still be given to that user.

6.3.9 Call Transfer (CT)

No interaction.

6.3.10 Call Forwarding Busy (CFB)

The invocation of CFU shall take precedence over CFB.

--`,,`-`-`,,`,,`,`,,`---

© ISO/IEC 2003 – All rights reserved

Copyright International Organization for Standardization
Provided by IHS under license with ISO
No reproduction or networking permitted without license from IHS
Not for Resale

6.3.11 Call Forwarding No Reply (CFNR)

The invocation of CFU shall take precedence over CFNR.

6.3.12 Call Deflection (CD)

No interaction.

6.3.13 Path Replacement (PR)

No interaction.

6.4 Interworking considerations

Interworking with other networks is optional. When interworking with another network, the implementation specific limit of the total number of known diversions for each call shall still apply.

Where a remote user is on a different network, notifications to the remote user, if applicable, shall be sent to the remote user's network for delivery to the remote user. Numbers included in this information shall be provided as required for the other network.

If the private network detects diversion back to a destination in the public network, the private network may request that diversion is performed by the public network.

The PISN may activate, deactivate and interrogate CFU in the public ISDN on behalf of a PISN user.

7 SS-CFB stage 1 specification

7.1 Description

7.1.1 General description

SS-CFB enables a served user to have the PISN redirect to another user calls which are addressed to the served user's PISN number and meet busy. SS-CFB may operate on all calls or just those associated with specified basic services. The served user's ability to originate calls is unaffected by SS-CFB.

CFB is provided on a per PISN number basis.

The maximum number of diversions to a single call is an implementation option. When counting the number of diversions, all types of diversions shall be included.

7.1.2 Qualifications on applicability to telecommunication services

This supplementary service is applicable to all basic services defined in ISO/IEC 11574.

7.2 Procedures

7.2.1 Provision/withdrawal

6.2.1 shall apply with "CFU" replaced by "CFB".

7.2.2 Normal procedures

7.2.2.1 Activation/deactivation/registration/interrogation

6.2.2.1 shall apply with "CFU" replaced by "CFB".

7.2.2.2 Invocation and operation

All incoming calls indicating a basic service for which CFB is active shall be diverted if the served user is busy.

7.2.2.2.1 Served user notification

6.2.2.2.1 shall apply with "CFU" replaced by "CFB".

7.2.2.2.2 Diverted-to user notification

6.2.2.2.2 shall apply.

7.2.2.2.3 Calling user notification

6.2.2.2.3 shall apply.

7.2.3 Exceptional procedures

6.2.3 shall apply with "CFU" replaced by "CFB".

© ISO/IEC 2003 – All rights reserved
Copyright International Organization for Standardization
Provided by IHS under license with ISO
No reproduction or networking permitted without license from IHS
Not for Resale

7.3 Interactions with other supplementary services and ANFs

Interactions with other supplementary services and ANFs for which PISN standards were available at the time of publication of this International Standard are specified below.

7.3.1 Calling Line Identification Presentation (CLIP)

6.3.1 shall apply.

7.3.2 Connected Line Identification Presentation (COLP)

6.3.2 shall apply.

7.3.3 Calling/Connected Line Identification Restriction (CLIR)

6.3.3 shall apply.

7.3.4 Calling Name Identification Presentation (CNIP)

6.3.4 shall apply.

7.3.5 Connected Name Identification Presentation (CONP)

6.3.5 shall apply. In addition, as an implementation option, if User C is also busy, the original user's name may be presented to the calling user instead of the user's C name.

7.3.6 Calling/Connected Name Identification Restriction (CNIR)

6.3.6 shall apply.

7.3.7 Completion of Calls to Busy Subscriber (CCBS)

If the call to User B is diverted to User C by CFB and User C is busy, then a CCBS request from User A shall be applied either to the diverted-to User C or to the originally called User B.

If User B activates CFB after User A has requested CCBS and whilst the CCBS recall has not yet been accepted by User A, then the CCBS request shall continue to be applied to User B.

If a user invokes CCBS whilst CFB is activated, or a user invokes CCBS and subsequently activates CFB, this shall not affect the provision of the CCBS recall to that user.

7.3.8 Completion of Calls on No Reply (CCNR)

If the call to User B is diverted to User C by CFB and User C does not answer, then a CCNR request from User A shall be applied to the diverted-to User C.

If User B activates CFB after User A has requested CCNR and whilst the CCNR recall has not yet been accepted by User A, then the CCNR request shall continue to be applied to User B.

If a user invokes CCNR whilst CFB is activated, or a user invokes CCNR and subsequently activates CFB, this shall not affect the provision of the CCNR recall to that user .

7.3.9 Call Transfer (CT)

No interaction.

7.3.10 Call Forwarding Unconditional (CFU)

The invocation of CFU shall take precedence over CFB.

7.3.11 Call Forwarding No Reply (CFNR)

No interaction.

7.3.12 Call Deflection

No interaction.

NOTE - In case of NDUB (Network Determined User Busy) the call is not presented to the user, and thus CFB takes precedence over CD. If an NDUB condition is not met, the incoming call is presented to the called user and invocation of either CFB or CD depends on the user's response.

7.3.13 Path Replacement (PR)

No interaction.

© ISO/IEC 2003 – All rights reserved

Copyright International Organization for Standardization
Provided by IHS under license with ISO
No reproduction or networking permitted without license from IHS
Not for Resale

7.4 Interworking Considerations

6.4 shall apply with "CFU" replaced by "CFB".

8 SS-CFNR stage 1 specification

8.1 Description

8.1.1 General description

SS-CFNR enables a served user to have the PISN redirect to another user calls which are addressed to the served user's PISN number and for which the connection is not established within a predefined period of time. SS-CFNR may operate on all calls or just those associated with specified basic services. The served user's ability to originate calls is unaffected by SS-CFNR.

CFNR is provided on a per PISN number basis.

The maximum number of diversions to a single call is an implementation option. When counting the number of diversions, all types of diversions shall be included.

8.1.2 Qualifications on applicability to telecommunication services

This supplementary service is applicable to all basic services defined in ISO/IEC 11574.

8.2 Procedures

8.2.1 Provision/withdrawal

6.2.1 shall apply with "CFU" replaced by "CFNR".

8.2.2 Normal procedures

8.2.2.1 Activation/deactivation/registration/interrogation

6.2.2.1 shall apply with "CFU" replaced by "CFNR".

8.2.2.2 Invocation and operation

All incoming calls indicating a basic service for which CFNR is active shall be diverted if the served user does not reply within a specified time interval.

The original call shall continue to alert the served user, who shall still be able to accept the call until the call to the diverted-to user has reached an alerting state.

8.2.2.2.1 Served user notification

6.2.2.2.1 shall apply with "CFU" replaced by "CFNR".

8.2.2.2.2 Diverted-to user notification

6.2.2.2.2 shall apply.

8.2.2.2.3 Calling user notification

6.2.2.2.3 shall apply.

8.2.3 Exceptional Procedures

8.2.3.1 Activation/Deactivation

6.2.3.1 shall apply with "CFU" replaced by "CFNR".

8.2.3.2 Interrogation

6.2.3.3 shall apply.

8.2.3.3 Invocation and operation

CFNR shall not be invoked on a call to the served user if the call uses a basic service for which CFNR has not been activated.

In cases where a user normally receives, as part of notification, the number of the diverted-to user, the last diverting user or the original called user and this number is unavailable (e.g. due to number presentation restriction, or interworking), the user who would have been given the number shall receive an indication of the reason why no number can be given.

Within a PISN the total number of all diversions for each call shall be limited. The maximum number of such diversions for each call shall be an implementation option. When counting the number of diversions, all types of diversions shall be included. If the limit is reached and an attempt is made to divert the call an additional time, the diversion shall not take place.

--`,,`-`-`,,`,,`,`,,`---

© ISO/IEC 2003 – All rights reserved
Copyright International Organization for Standardization
Provided by IHS under license with ISO
No reproduction or networking permitted without license from IHS
Not for Resale

If the diverted call cannot be completed to the diverted-to destination, then the PISN shall clear the diverted leg of the call and continue to alert the diverting user. If the diverting user has already been notified of CFNR, then that user shall be notified of failure of CFNR.

The call diversion may be overridden for specific calls, e.g. calls from the diverted-to user to the diverting user. The conditions for this shall be implementation specific.

8.3 Interactions with other supplementary services and ANFs

Interactions with other supplementary services and ANFs for which PISN standards were available at the time of publication of this International Standard are specified below.

8.3.1 Calling Line Identification Presentation (CLIP)

Diverted-to users, who have subscribed to CLIP shall receive the calling user's number unless CLIR applies and the diverted-to user has no override capability.

NOTE - If subscribed to, the served (diverting) user receives the Calling Line Identification of all calls, unless CLIR applies and the served user has no override capability.

8.3.2 Connected Line Identification Presentation (COLP)

6.3.2 shall apply.

8.3.3 Calling/Connected Line Identification Restriction (CLIR)

6.3.3 shall apply.

8.3.4 Calling Name Identification Presentation (CNIP)

Diverted-to users, who have subscribed to CNIP shall receive the calling user's name unless CNIR has been invoked and the diverted-to user has no override capability.

NOTE - If subscribed to, the served (diverting) user receives the Calling Name Identification of all calls, unless CNIR applies and the served user has no override capability.

8.3.5 Connected Name Identification Presentation (CONP)

If the served user subscribes to the option that the calling user is not notified of call diversion, then the calling user shall not be provided with CONP, unless the calling user has override capability.

If the served user subscribes to the option that the calling user is notified, but without the diverted-to user number/name, then the calling user shall not be provided with CONP, unless the calling user has an override capability.

In all other cases, the provision of the diverted-to user's name on answer shall be in accordance with CONP. The diverted-to user's name shall not be provided on commencement of alerting.

8.3.6 Calling/Connected Name Identification Restriction (CNIR)

6.3.6 shall apply.

8.3.7 Completion of Calls to Busy Subscriber (CCBS)

If User B activates CFNR after User A has requested CCBS and whilst the CCBS recall has not yet been accepted by User A, then the CCBS request shall continue to be applied to User B.

NOTE - In such a case, the call resulting from successful completion of CCBS can be subject to CFNR if not answered.

If a user invokes CCBS whilst CFNR is activated, or a user invokes CCBS and subsequently activates CFNR, this shall not affect the provision of the CCBS recall to that user.

8.3.8 Completion of Calls on No Reply (CCNR)

If the call to User B is diverted to User C by CFNR and User C does not answer, then a CCNR request from User A shall be applied to either User B or User C.

If User B activates CFNR after User A has requested CCNR and whilst the CCNR recall has not yet been accepted by User A, then the CCNR request shall continue to be applied to User B.

If a user invokes CCNR whilst CFNR is activated, or a user invokes CCNR and subsequently activates CFNR, this shall not affect the provision of the CCNR recall to that user.

© ISO/IEC 2003 – All rights reserved

Copyright International Organization for Standardization
Provided by IHS under license with ISO
No reproduction or networking permitted without license from IHS
Not for Resale

8.3.9 Call Transfer (CT)

If User C who has subscribed to CFNR, does not answer the transferred call, then upon expiration of the CFNR timer, the CFNR shall be attempted.

8.3.10 Call Forwarding Unconditional (CFU)

The invocation of CFU shall take precedence over CFNR.

8.3.11 Call Forwarding Busy (CFB)

No interaction.

8.3.12 Call Deflection (CD)

If at one alerting served user there are several diversion requests (CFNR, CDA), the PISN shall only accept the first valid request. After acceptance of a diversion request, new diversion requests (either CFNR or CDA) from the same served user shall not be accepted unless the diverted call of the previously accepted request cannot be completed to the diverted-to destination.

8.3.13 Path Replacement (PR)

No interaction.

8.4 Interworking Considerations

6.4 shall apply with "CFU" replaced by "CFNR".

9 SS-CD stage 1 specification

9.1 Description

9.1.1 General description

Call Deflection permits a served user to respond to an incoming call offered by the PISN by requesting diversion of that call to another number specified in the response. This request is only allowed before the called user has answered the call. The served user's originating service is unaffected.

CD is invoked on a call by call basis.

The maximum number of diversions to a single call is an implementation option. When counting the number of diversions, all types of diversions shall be included.

9.1.2 Qualifications on applicability to telecommunication services

This supplementary service is applicable to all basic services defined in ISO/IEC 11574.

9.2 Procedures

9.2.1 Provision/withdrawal

6.2.1 shall apply with "CFU" replaced by "CD" and table 1 replaced by table 2.

Table 2 - Subscription options

Subscription Parameter	Value
Calling user receives notification that call has been diverted	- No - Yes, without diverted-to number/name - Yes, with diverted-to number/name
Served user releases his/her number/name to diverted-to user	- No - Yes

9.2.2 Normal procedures

9.2.2.1 Activation/deactivation/registration/interrogation

Activation, deactivation and interrogation procedures are not applicable.

9.2.2.2 Invocation and operation

The served user can respond to an incoming call offered by normal basic call procedure by requesting the Call Deflection service. The request shall contain the diverted-to number. The diverted-to number may be accompanied by a diverted-to

© ISO/IEC 2003 – All rights reserved
Copyright International Organization for Standardization
Provided by IHS under license with ISO
No reproduction or networking permitted without license from IHS
Not for Resale

subaddress. The served user can request CD either from an alerting state (CDA) or immediately in response to a call request from the PISN (CDI).

On acceptance of the CD request, the PISN shall perform the diversion towards the indicated diverted-to number. For clearing the call to User B two cases are to be distinguished:

1. CDA: On acceptance of the CD request the original call at the served user shall remain in the alerting state and the served user shall still be able to accept the call until the diverted-to user enters an alerting state. When the diverted-to user enters the alerting state the call to the served user is cleared.
2. CDI: The call to the served user is cleared immediately on acceptance of the CD request.

9.2.2.2.1 Served user notification

On acceptance of the CD request the PISN shall send a notification with a positive acknowledgement to the CD request.

9.2.2.2.2 Diverted-to user notification

6.2.2.2.2 shall apply.

9.2.2.2.3 Calling user notification

6.2.2.2.3 shall apply.

9.2.3 Exceptional Procedures

9.2.3.1 Activation/Deactivation

Not applicable.

9.2.3.2 Invocation and Operation

If the PISN cannot accept a CD request, the invoking user shall receive a notification with appropriate cause that the request was unsuccessful. Possible causes for rejection are e.g.:

– service or option not subscribed to,

– diverted-to number is an invalid PISN number,

– diverted-to number is the served user's number,

– insufficient information,

– incoming call has already been answered,

– the number of diversions has reached the upper limit.

If the CD request is rejected by the PISN, the PISN shall continue the call at the diverting user. If alerting at the diverting user had begun, the alerting is not interrupted.

If the diverted call cannot be completed to the diverted-to destination, then the PISN shall clear the diverted leg of the call. If the served user is still in an alerting state, alerting will continue and the invoking (served) user shall be notified of failure of CD.

NOTE - After rejection of the CD request or after unsuccessful completion of the diverted call at the diverted-to user the served user may again invoke SS-CD.

9.2.3.3 Interrogation

Not applicable.

9.3 Interaction with other supplementary services and ANFs

Interactions with other supplementary services and ANFs for which PISN standards were available at the time of publication of this International Standard are specified below.

9.3.1 Calling Line Identification Presentation (CLIP)

8.3.1 shall apply.

9.3.2 Connected Line Identification Presentation (COLP)

6.3.2 shall apply.

© ISO/IEC 2003 – All rights reserved

Copyright International Organization for Standardization
Provided by IHS under license with ISO
No reproduction or networking permitted without license from IHS
Not for Resale

9.3.3 Calling/Connected Line Identification Restriction (CLIR)

6.3.3 apply.

9.3.4 Calling Name Identification Presentation (CNIP)

8.3.4 shall apply.

9.3.5 Connected Name Identification Presentation (CONP)

6.3.5 shall apply.

9.3.6 Calling/Connected Name Identification Restriction (CNIR)

6.3.6 shall apply.

9.3.7 Completion of Calls to Busy Subscriber (CCBS)

If User B deflects an incoming call to User C using CDI and User C is busy, then a CCBS request if made by User A shall be applied to User C.

NOTE - In case of using CDA, if User C is busy, the call continues alerting User B (see § 9.2.3.2).

If CCBS was invoked by User A on User B, then User B shall be able to deflect the CCBS call.

A user shall not be able to deflect a CCBS recall.

9.3.8 Completion of Calls on No Reply (CCNR)

If User B deflects an incoming call to User C and User C does not answer, then a CCNR request if made by User A shall be applied to User C.

If CCNR was invoked by User A on User B, then User B shall be able to deflect the CCNR call.

A user shall not be able to deflect a CCNR recall.

9.3.9 Call Transfer (CT)

If a user has transferred a call to a user still in the alerting state, then the alerted user may invoke CD in order to divert the transferred call to another user

9.3.10 Call Forwarding Unconditional (CFU)

No interaction.

9.3.11 Call Forwarding on Busy (CFB)

7.3.12 shall apply.

9.3.12 Call Forwarding on No Reply (CFNR)

8.3.9 shall apply.

9.3.13 Path Replacement (PR)

No interaction.

9.4 Interworking considerations

6.4 shall apply with "CFU" replaced by "CD".

9.5 Overall SDL

Figure 1 contains the dynamic description of SS-DIV using the Specification and Description Language (SDL) defined in ITU-T Rec. Z.100. The SDL process represents the behaviour of the PISN in providing SS-DIV.

Output signals to the left represent primitives to the calling user. Output signals to the right represent primitives to the served user or to the diverted-to user. Input signals from the right represent internal stimuli.

© ISO/IEC 2003 – All rights reserved
Copyright International Organization for Standardization
Provided by IHS under license with ISO
No reproduction or networking permitted without license from IHS
Not for Resale

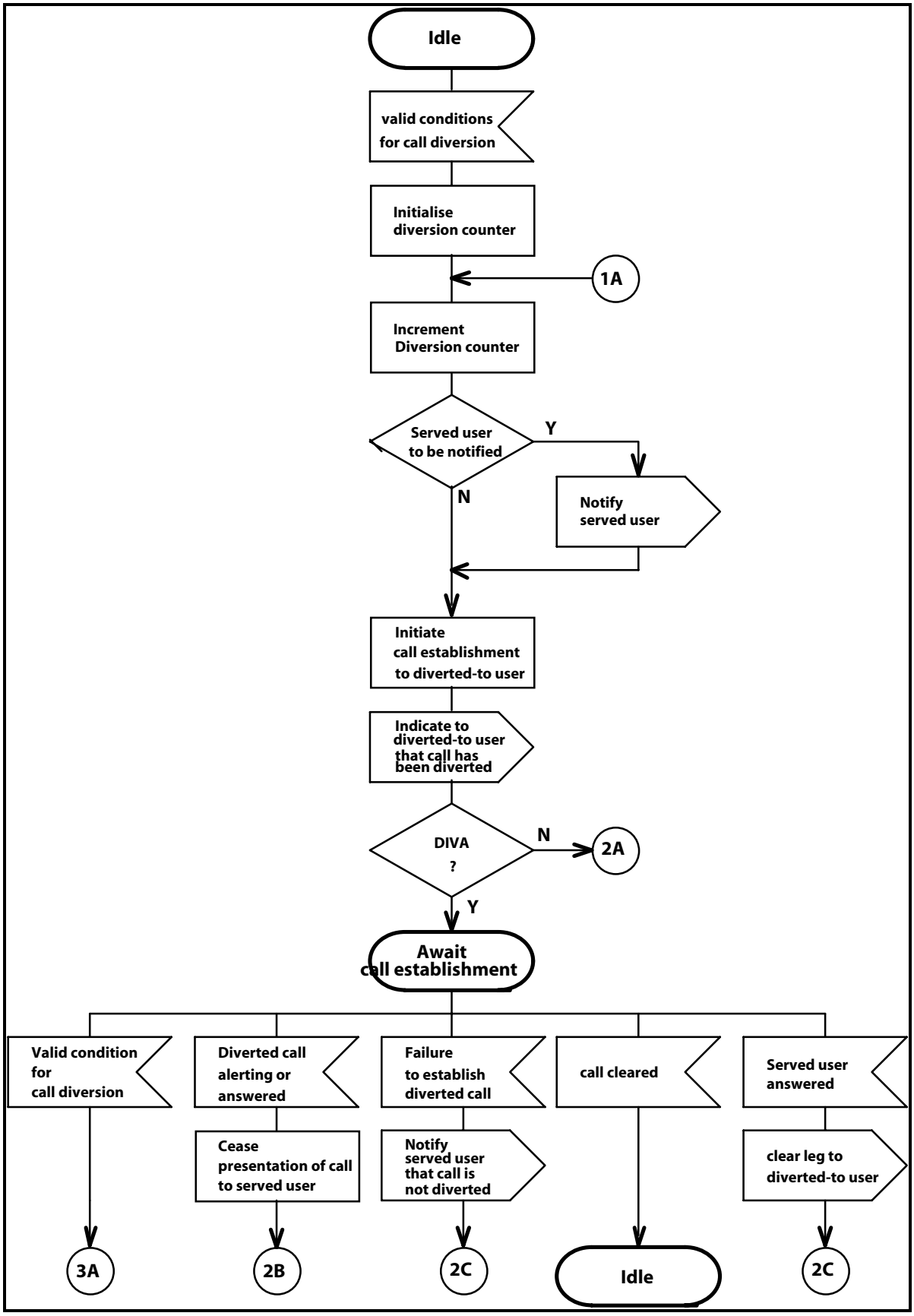

Figure 1 - SS-DIV, Overall SDL (part 1)

© ISO/IEC 2003 – All rights reserved
Copyright International Organization for Standardization
Provided by IHS under license with ISO
No reproduction or networking permitted without license from IHS
Not for Resale

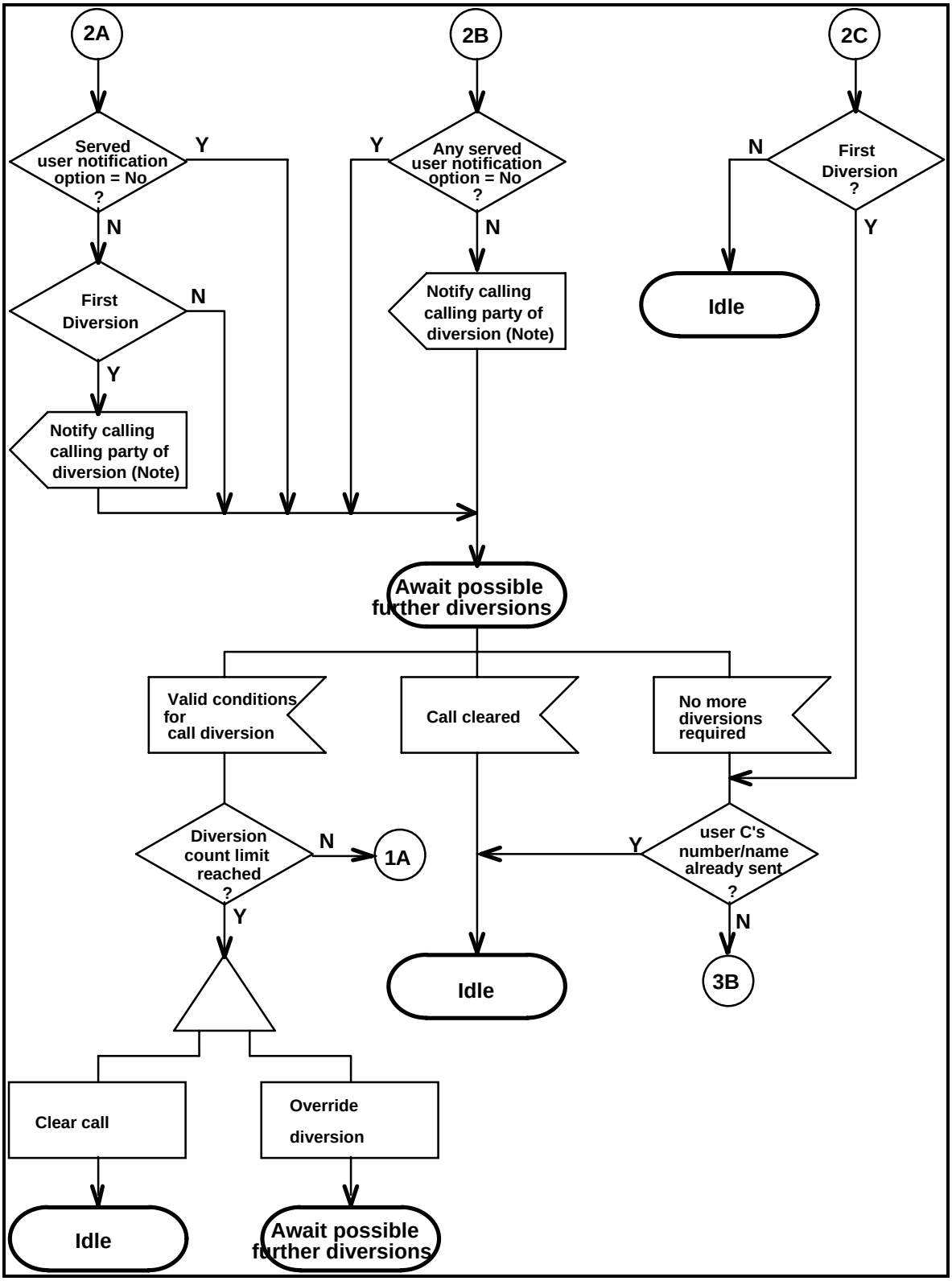

NOTE - May be accompanied by a notification of number/name according to the provision in clause 6.2.2.2.3.

Figure 1 - SS-DIV, Overall SDL (part 2)

© ISO/IEC 2003 – All rights reserved
Copyright International Organization for Standardization
Provided by IHS under license with ISO
No reproduction or networking permitted without license from IHS
Not for Resale

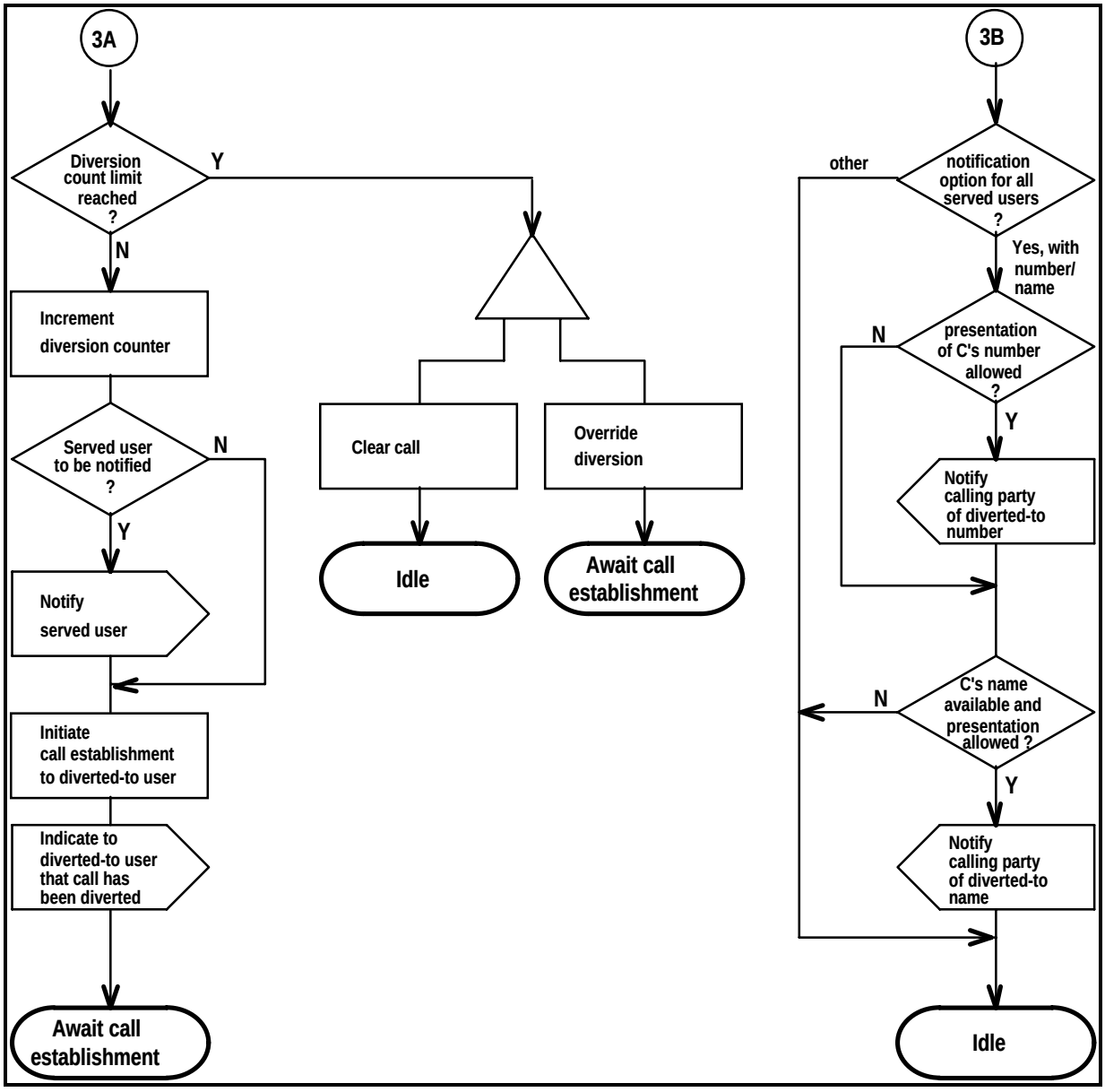

Figure 1 - SS-DIV, Overall SDL (part 3)

© ISO/IEC 2003 – All rights reserved

Copyright International Organization for Standardization
Provided by IHS under license with ISO
No reproduction or networking permitted without license from IHS
Not for Resale

10 SS-DIV stage 2 specification

This clause defines the stage 2 of the Call Diversion supplementary services (CFU, CFB, CNFR and CD) using the "forward switching" network routeing algorithm and the "rerouteing" network routeing algorithm.

10.1 Functional model

10.1.1 Functional model description

The functional model shall comprise the following functional entities (FEs):

FE1: Calling user's service agent
FE2: Calling user's service control entity
FE3: Call diversion execution entity
FE4: Call diversion detection and control entity
FE5: Served user's service agent
FE6: Diverted-to user's service control entity
FE7: Diverted-to user's service agent
FE8: User's activation, deactivation and interrogation control entity
FE9: User's activation, deactivation and interrogation agent

The following functional relationships shall exist between these FEs:

ra between FE1 and FE2,
rb between FE2 and FE3,
rc between FE3 and FE4,
rd between FE4 and FE5,
re between FE3 and FE6,
rf between FE6 and FE7,
rg between FE4 and FE8,
ri between FE4 and FE6 and
rh between FE8 and FE9.

Different types of call diversion (e.g. CFU, CFB, CFNR and CD) may be concatenated during multiple call diversion as well as different network routeing algorithms (call diversion by "forward switching" and call diversion by "rerouteing").

Figure 2 shows the FEs and relationships for a single stage of call diversion.

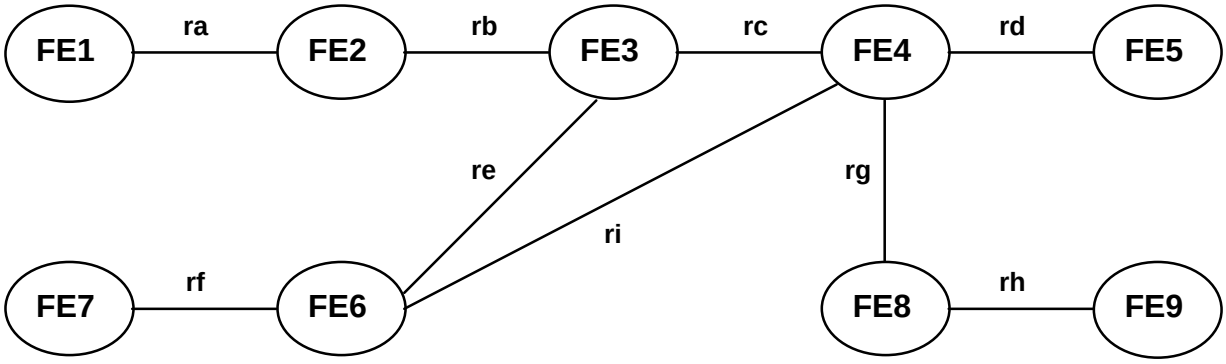

Figure 2 - Functional Model for a single stage of call forwarding

© ISO/IEC 2003 – All rights reserved
Copyright International Organization for Standardization
Provided by IHS under license with ISO
No reproduction or networking permitted without license from IHS
Not for Resale

Figure 3 shows the FEs and relationships for two stages of call diversion.

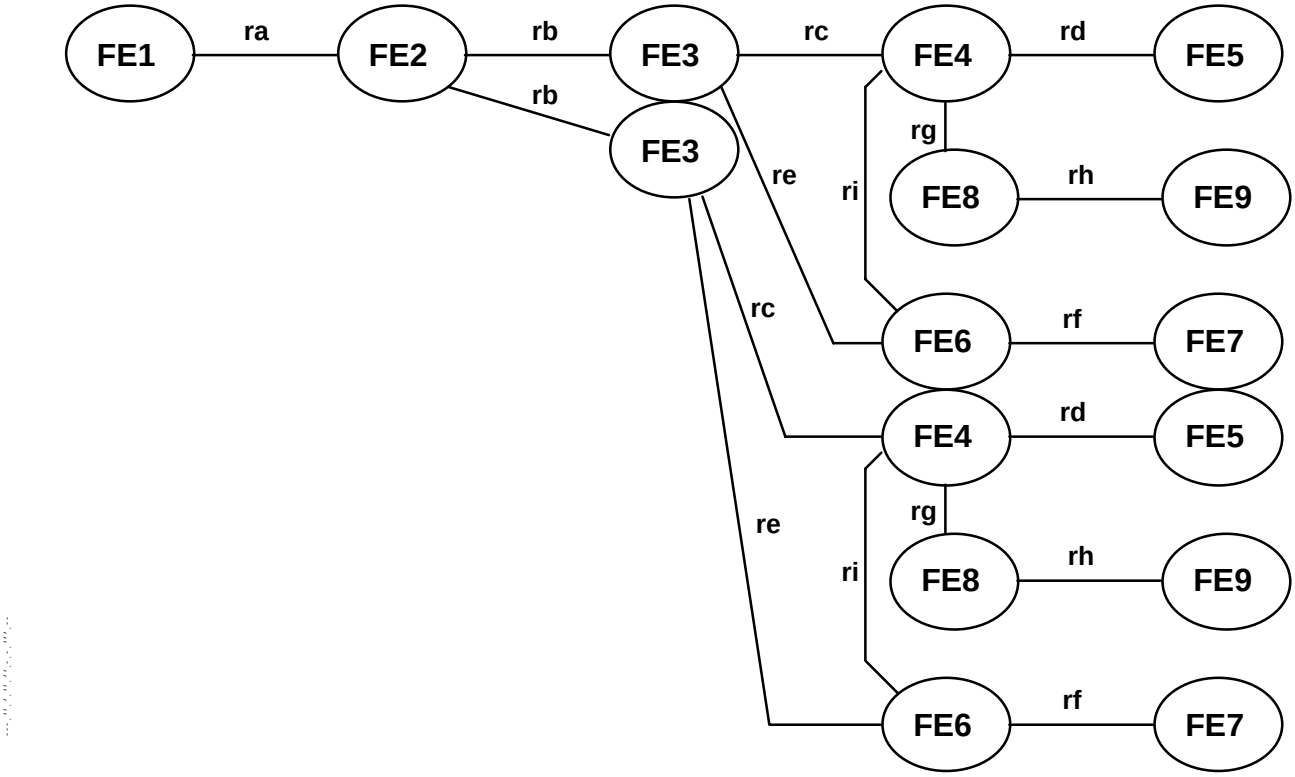

Figure 3 - Functional Entity Model for two stages of call diversion

10.1.2 Description of the functional entities

10.1.2.1 Calling user's service agent, FE1

This FE delivers the call diversion notifications to the calling user.

10.1.2.2 Calling user's service control entity, FE2

This FE provides the appropriate call diversion notifications to FE1 according to the information received from FE3 and FE6.

10.1.2.3 Call diversion execution entity, FE3

This FE executes call diversion by initiating a new call establishment, and requesting release of the leg to the original called user. FE3 also relays call diversion information to FE2 and FE6.

10.1.2.4 Call diversion detection and control entity, FE4

a) Call Forwarding (CFU, CFB, CFNR)

This FE detects a call diversion request and supervises this request. FE4 provides a notification to FE5 and provides call diversion information to FE3. FE 4 also receives activation, deactivation and interrogation requests from FE8 and provides responses to FE8. FE4 is responsible for modifying data related to activation, deactivation and remote activation enabling and disabling.

b) Call Deflection

This FE receives from FE5 a call diversion request and supervises this request. FE4 provides also a notification to FE5 and provides call diversion information to FE3.

10.1.2.5 Served user's service agent, FE5

This FE delivers call forwarding notifications to the served user. In addition, in case of CD, it detects a call diversion request by the served user and passes that request to FE4.

© ISO/IEC 2003 – All rights reserved

Copyright International Organization for Standardization
Provided by IHS under license with ISO
No reproduction or networking permitted without license from IHS
Not for Resale

10.1.2.6 Diverted-to user's service control entity, FE6

This FE provides appropriate call diversion notifications to FE7 and provides also number presentation restriction information to FE2 via FE3.

10.1.2.7 Diverted-to user's service agent, FE7

This FE delivers call diversion notification to the diverted-to user.

10.1.2.8 User's activation, deactivation and interrogation control, FE8

This FE relays activation, deactivation and interrogation requests and responses between FE9 and FE4. FE8 is empty in case of SS-CD.

10.1.2.9 User's activation, deactivation and interrogation agent, FE9

This FE provides activation, deactivation and interrogation requests to FE8 and delivers corresponding responses to the requesting user. FE9 is empty in case of SS-CD.

10.1.3 Relationship of functional model to basic call functional model

- Functional entity FE1 shall be collocated with user A's CCA.
- Functional entity FE2 shall be collocated with user A's CC or with any Incoming Gateway CC.
- Functional entity FE3 shall be collocated with user A's CC or with any Incoming Gateway CC or any Transit CC in the case of call diversion by rerouteing. Functional entity FE3 shall be collocated with user B's CC (users B1 ... Bn in case of multiple call diversion) in the case of call diversion by forward switching.
- Functional entity FE4 shall be collocated with user B's CC (users B1 ... Bn in case of multiple call diversion).
- Functional entity FE5 shall be collocated with user B's CCA.
- Functional entity FE6 shall be collocated with user C's CC, and also with the CCs for users B2 ... Bn in case of multiple call diversion.
- Functional entity FE7 shall be collocated with user C's CCA.
- Functional entity FE8 shall be collocated with either the user B's CC or any remote user's CC.
- Functional entity FE9 shall be collocated with either the user B's CCA or any remote user's CCA.

An example of the relationship with a basic service is shown in figure 4. This example is used as the basis for the information flow sequence diagrams in 10.2.2.

© ISO/IEC 2003 – All rights reserved
Copyright International Organization for Standardization
Provided by IHS under license with ISO
No reproduction or networking permitted without license from IHS
Not for Resale

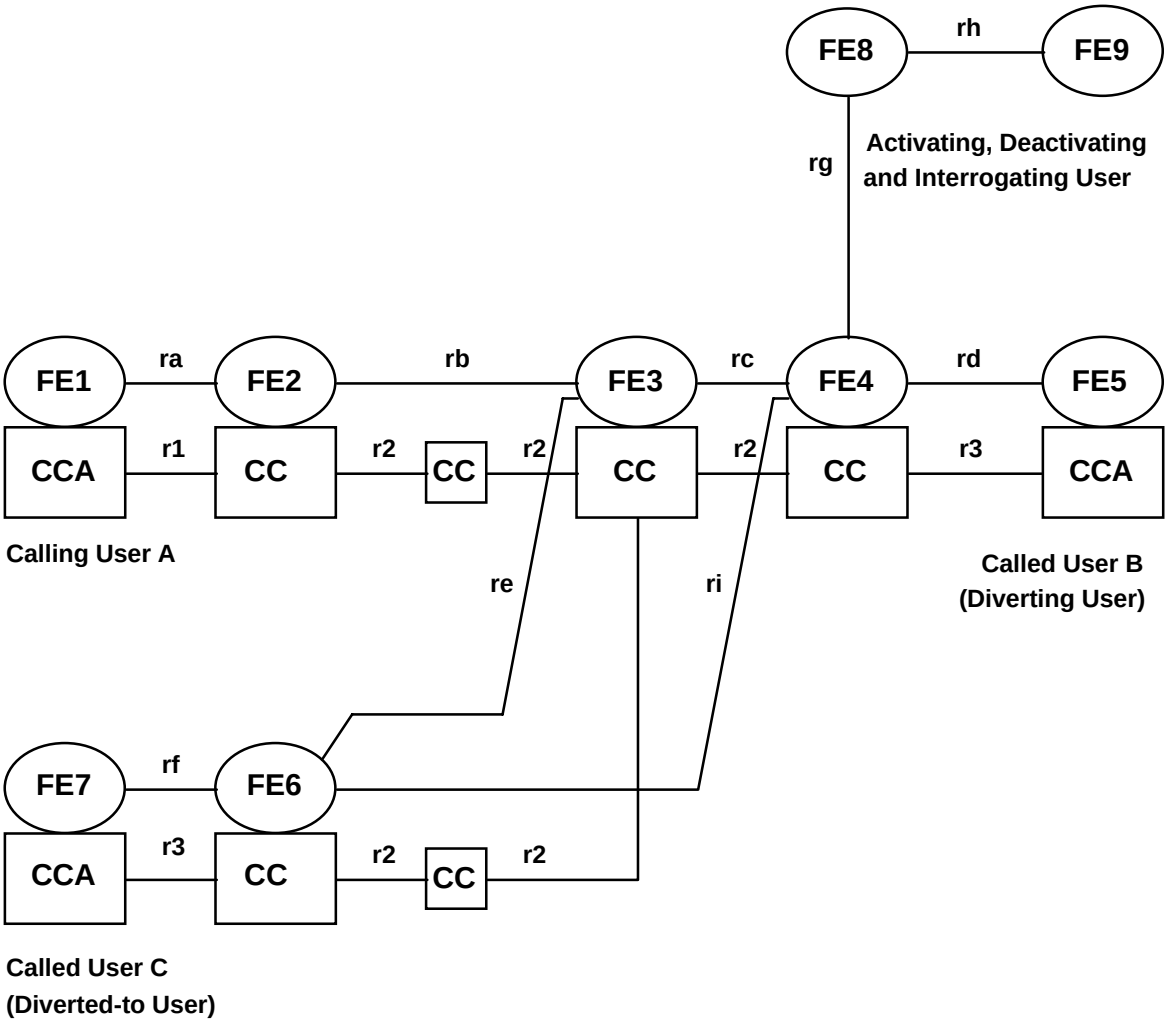

Figure 4 - Functional Entity Model Relationship

© ISO/IEC 2003 – All rights reserved

Copyright International Organization for Standardization
Provided by IHS under license with ISO
No reproduction or networking permitted without license from IHS
Not for Resale

10.2 Information flows

10.2.1 Definition of information flows

In the tables below, the column headed "Request" indicates which of the service elements are mandatory (M) and which are optional (O) in an request/indication information flow. The column headed "Confirm" indicates which of the service elements are mandatory (M) and which are optional (O) in a response/confirmation information flow.

10.2.1.1 INFORM 1

This unconfirmed information flow indicates to FE2 that call diversion has been initiated and informs of calling user notification restrictions (subscription options of user B). It shall be sent over relationship rb and it shall contain the service elements listed in table 3.

Table 3 - Content of INFORM 1

Service elements	Allowed value	Request	Confirm
Notificat. Subscription Option	No Yes,without number/name Yes, with number/name	M	
Diverting Cause	CFU/CDI,CFB,CFNR/CDA	M	
Diverted-to Number		M	

10.2.1.2 INFORM 2

This unconfirmed information flow indicates to FE1 that call diversion has been initiated. It shall only be sent if required by the subscription options of user B. It shall be sent over relationship ra.

There is no service element in this information flow.

© ISO/IEC 2003 – All rights reserved
Copyright International Organization for Standardization
Provided by IHS under license with ISO
No reproduction or networking permitted without license from IHS
Not for Resale

10.2.1.3 INFORM 3

This unconfirmed information flow indicates to FE5 that call forwarding has been initiated. It shall only be sent if required by the subscription options of user B and it shall not be sent in case of a failure of the call forwarding invocation request. It shall be sent over relationship rd and it shall contain the service elements listed in table 4.

Table 4 - Content of INFORM 3

Service elements	Allowed value	Request
Diverting Cause	CFU,CFB,CFNR	M
Served User's MSN Number		O (Notes 3 & 6)
Original Diverting Cause	CFU/CDI,CFB,CFNR/CDA	O (Notes 3 & 7)
Last Diverting Cause	CFU/CDI,CFB,CFNR/CDA	O (Notes 3 & 7)
Connection Type		M
Originating Number including restriction indicator		O (Notes 1 & 3)
OriginatingSubaddress		O (Notes 3 & 8)
Calling Party Name including restriction indicator		O (Notes 2 & 3)
Last Diverting Number including restriction indicator		O (Notes 3, 5, 7)
Original Called Number including restriction indicator		O (Notes 3, 4, 7)

NOTES

1. If CLIP applies, this service element shall be included as defined for the Identification supplementary services in ISO/IEC 14136.
2. This shall comprise the service elements of information flow INFORM 2 in ISO/IEC 13864.
3. This service element shall not be included in case of CFNR.
4. This service element is defined in ISO/IEC 11574.
5. This service element shall only be included if allowed by the previous served user(s).
6. This service element shall only be included if MSN applies for user B.
7. This service element shall only be included in case of multiple diversion.
8. If CLIP applies, this service element may be included as defined for the Identification supplementary services in ISO/IEC 14136.

© ISO/IEC 2003 – All rights reserved

Copyright International Organization for Standardization
Provided by IHS under license with ISO
No reproduction or networking permitted without license from IHS
Not for Resale

10.2.1.4 INFORM 4

This unconfirmed information flow indicates to FE6 that call diversion is taking place. It shall be sent over relationship re and it shall contain the service elements listed in table 5.

NOTE - The Diverted-to Number (= Destination Number), Originating Number, Originating Subaddress, Connection Type and Call History are carried in the basic call to user C and are not shown in INFORM 4. The basic call service elements are defined in ISO/IEC 11574.

Table 5 - Content of INFORM 4

Service elements	**Allowed value**	**Request**
Last Diverting Cause	CFU/CDI,CFB,CFNR/CDA	M
Original Diverting Cause	CFU/CDI,CFB,CFNR/CDA	O
Diversion Counter		M
Diverting Number, including restriction indicator		M
Original Called Number including restriction indicator		O (Note 3)
Calling Party Name		O (Note 1)
Original Called Name including restriction indicator		O (Notes 2 & 3)
Diverting Party Name including restriction indicator		O (Note 2)

NOTES

1. This shall comprise service elements of information flow INFORM 1 in ISO/IEC 13864.
2. This service element may be omitted in case of name not available or in case of presentation restricted or if not implemented.
3. This service element shall only be included in case of multiple diversion.

© ISO/IEC 2003 – All rights reserved
Copyright International Organization for Standardization
Provided by IHS under license with ISO
No reproduction or networking permitted without license from IHS
Not for Resale

10.2.1.5 INFORM 5

This unconfirmed information flow indicates to FE7 that call diversion is taking place. It shall be sent over relationship rf and it shall contain the service elements listed in table 6.

NOTE - The Diverted-to Number (= Destination Number), Connection Type and Call History are carried in the basic call to user C and are not shown in INFORM 5. The basic call service elements are defined in ISO/IEC 11574.

Table 6 - Content of INFORM 5

Service elements	Allowed value	Request
Original Diverting Cause	CFU/CDI,CFB,CFNR/CDA	O (Note 3)
Last Diverting Cause	CFU/CDI,CFB,CFNR/CDA	M
Diverting Number		O (Note 4)
Original Called Number		O (Notes 3 & 4)
Originating Number		O (Note 1)
Originating Subaddress		O (Note 1)
Calling Party Name		O (Note 2)
Original Called Name		O (Notes 3, 4, 5)
Diverting Party Name		O (Note 4 & 5)

NOTES

1. This shall comprise service elements of information flow INFORM 2 in ISO/IEC 14136.
2. This service element shall be included as defined for the Name Identification supplementary services in ISO/IEC 13864.
3. This service element shall only be included in case of multiple diversion.
4. This service element shall only be included if no restriction exists.
5. This service element may be omitted in case of name not available or if not implemented.

10.2.1.6 INFORM 6

This unconfirmed information flow indicates whether presentation of user C's number and name is allowed. It shall be sent over relationship re between FE6 and FE3 and over relationship rb between FE3 and FE2 and it shall contain the service elements listed in table 7.

Table 7 - Content of INFORM 6

Service elements	Allowed value	Request	Confirm
Presentation Indicator	present. allowed present. not allowed	M (Note 1)	
Diverted-to Party Name including restriction indicator		O (Note 2)	

NOTES

1. The Presentation Indicator shall apply only to the indication of user C's number.
2. This service element may be omitted in case of name not available or in case of presentation restricted or if not implemented.

--`,,`-`-`,,`,,`,`,,`---

© ISO/IEC 2003 – All rights reserved

Copyright International Organization for Standardization
Provided by IHS under license with ISO
No reproduction or networking permitted without license from IHS
Not for Resale

10.2.1.7 INFORM 7

This unconfirmed information flow informs FE1 of the user C's number and name if appropriate. It shall only be sent if required by the subscription options of user B and if user C's number is not presentation restricted. It shall be sent over relationship ra and it shall contain the service elements listed in table 8.

Table 8 - Contents of INFORM 7

Service elements	Allowed value	Request	Confirm
Diverted-to Number	PISNnumber number not available	M	
Diverted-to Party Name	name name not available	O (Note)	
NOTE - This service element shall only be included if no restriction exists. It may be omitted in case of name not available or if not implemented.			

10.2.1.8 INFORM 8

This unconfirmed information flow indicates to FE5 that CFU/CFB/CFNR has been activated. It shall be sent over relationship rd and it shall contain the service elements listed in table 9.

Table 9 - Contents of INFORM 8

Service elements	Allowed value	Request	Confirm
Diverted-to Number		M	
BasicService	all or a specific one	M	
Served User`s MSN Number		O (Note)	
Diversion procedure	CFU,CFB,CFNR	M	
NOTE - This service element shall only be included if MSN applies for user B.			

10.2.1.9 INFORM 9

This unconfirmed information flow indicates to FE5 that CFU/CFB/CFNR has been deactivated. It shall be sent over relationship rd and it shall contain the service elements listed in table 10.

Table 10 - Contents of INFORM 9

Service elements	Allowed value	Request	Confirm
Basic Service	all or a specific one	M	
Served user's MSN number		O (Note)	
Diversion procedure	CFU,CFB,CFNR	M	
NOTE - This service element shall only be included if MSN applies for user B.			

10.2.1.10 INFORM 10

This unconfirmed information flow indicates to FE4 and FE5 that DIVA has not been completed. It shall be sent over relationship rc and rd and it shall contain the service element listed in table 11.

Table 11 - Contents of INFORM 10

Service elements	Allowed value	Request	Confirm
Call State Notification	Diversion leg cleared	M	

--`,,,`-`-`,,`,,`,`,,`---
© ISO/IEC 2003 – All rights reserved
Copyright International Organization for Standardization
Provided by IHS under license with ISO
No reproduction or networking permitted without license from IHS
Not for Resale

10.2.1.11 DIVERT

This confirmed information flow invokes call diversion operation. It shall be sent over relationship rc and it shall contain the service elements listed in table 12.

Table 12 - Contents of DIVERT

Service elements	Allowed value	Request	Confirm
Diverting Cause	CFU/CDI,CFB,CFNR/CDA	M	
Diverted-to Number including restriction indicator		M	
Diverted-to Subaddress		O	
Diversion Counter		M	
Connection Type		M (Note 1)	
Originating Number		M (Note 1)	
Originating Subaddress		O (Note 2)	
Calling Party Name		O (Note 5)	
Notific. Subscript. Option:	No Yes,with number/name Yes,without number/name	M	
Call History		O (Note 2)	
Diverting Number including restriction indicator		M	
Original Called Number including restriction indicator		O (Note 3)	
Original Called Name including restriction indicator		O (Notes 3 & 4)	
Diverting Party Name including restriction indicator		O (Note 4	
Diverting Invocation Result	accepted/rejected		M

NOTES

1. This service element is obtained from the basic call SETUP request/indication information flow.
2. This service element shall be included if available in the basic call SETUP request/indication information flow.
3. This service element shall only be included in case of multiple diversion.
4. This service element may be omitted in case of name not available or in case of presentation restricted or if not implemented.
5. This shall comprise the service elements of information flow INFORM 1 in ISO/IEC 14136.

© ISO/IEC 2003 – All rights reserved

Copyright International Organization for Standardization
Provided by IHS under license with ISO
No reproduction or networking permitted without license from IHS
Not for Resale

10.2.1.12 DEFLECT

This confirmed information flow indicates to FE4 that CD has been invoked. It shall be sent over relationship rd and it shall contain the service elements listed in table 13.

Table 13 - Contents of DEFLECT

Service elements	Allowed value	Request	Confirm
Diverted-to Number		M	
Diverted-to Subaddress		O	
CD invocation result	accepted/rejected		M

10.2.1.13 INTERROGATE

This confirmed information flow conveys call forwarding interrogation. It may be sent over relationship rg and relationship rh and it shall contain the service elements listed in table 14.

Table 14 - Contents of INTERROGATE

Service elements	Allowed value	Request	Confirm
Diversion Procedure	CFU,CFB,CFNR	M	
BasicService	all or a specific one	M	
Served User's Number		O (Note 1)	
Interrogating User's Number		O (Note 5)	
Interrogating User's MSN Number		O (Note 2)	
Interrogation Request Result	activated not activated or rejected		M
Basic Service			O (Note 3)
Diverted-to Number for Basic Service			O (Note 3)
Diverted-to Subaddress for Basic Service			O (Note 3)
Remote Activation	enabled or disabled		O (Note 4)

NOTES

1. This service element shall only be included in the case of remote interrogation.
2. This service element shall be included over relationship rh if MSN applies at the interrogating user. Otherwise this service element shall not be included.
3. This service element shall only be included if call diversion is activated. It may be repeated, if the INTERROGATE request/indication indicates " all basic services".
4. This service element may be repeated, if the INTERROGATE request/indication indicates "all basic services".
5. The service element shall be included over relationship rg and shall not be included over relationship rh.

© ISO/IEC 2003 – All rights reserved
Copyright International Organization for Standardization
Provided by IHS under license with ISO
No reproduction or networking permitted without license from IHS
Not for Resale

10.2.1.14 ACTIVATE

This confirmed information flow activates call forwarding. It may be sent over relationship rg and relationship rh and it shall contain the service elements listed in table 15.

Table 15 - Contents of ACTIVATE

Service elements	Allowed value	Request	Confirm
Diversion Procedure	CFU,CFB,CFNR	M	
Diverted-to Number		M	M
Diverted-to Subaddress		O	
Basic Service	all or a specific one	M	
Served User's Number		O (Note 1)	
Activating User's Number		O (Note 4)	
Activating User's MSN Number		O (Note 2)	
Activation Request Result	accepted/rejected		M
Cause for rejection	* service not subscribed * insufficient information * no valid diverted-to number * basic service not subscribed		O (Note 3)

NOTES

1. This service element shall only be included in the case of remote activation.
2. This service element shall be included over relationship rh if MSN applies at the activating user. Otherwise this service element shall not be included .
3. This service element shall only be included in case of rejection.
4. The service element shall be included over relationship rg and shall not be included over relationship rh.

--`,,`-`-`,,`,,`,`,,`---

© ISO/IEC 2003 – All rights reserved

Copyright International Organization for Standardization
Provided by IHS under license with ISO
No reproduction or networking permitted without license from IHS
Not for Resale

10.2.1.15 DEACTIVATE

This confirmed information flow deactivates call forwarding. It may be sent over relationship rg and relationship rh and it shall contain the service elements listed in table 16.

Table 16 - Contents of DEACTIVATE

Service elements	Allowed value	Request	Confirm
Diversion Procedure	CFU,CFB,CFNR	M	
Basic Service	all or a specific one	M	
Served User's Number		O (Note 1)	
Deactivating User's Number		O (Note 4)	
Deactivating User's MSN Number		O (Note 2)	
Deactivation Request Result	accepted/rejected		M
Cause for rejection	* service not subscribed * insufficient information * basic service not subscribed		O (Note 3)

NOTES

1. This service element shall only be included in case of remote deactivation.
2. This service element shall be included over relationship rh if MSN applies at the deactivating user. Otherwise this service element shall not be included.
3. This service element shall only be included in case of rejection.
4. The service element shall be included over relationship rg and shall not be included over relationship rh.

10.2.1.16 ENABLE

This confirmed information flow enables remote call forwarding activation. It may be sent over relationship rd and it shall contain the service elements listed in table 17.

Table 17 - Contents of ENABLE

Service elements	Allowed value	Request	Confirm
Diversion Procedure	CFU,CFB,CFNR	M	
Basic Service	all or a specific one	M	
Served User's MSN Number		O (Note 1)	
Enable Request Result	accepted/rejected		M
Cause for rejection	* service not subscribed * insufficient information * basic service not subscribed		O (Note 2)

NOTES

1. This service element shall only be included if MSN applies for user B.
2. This service element shall only be included in case of rejection.

--`,,`-`-`,,`,,`,`,,`---
© ISO/IEC 2003 – All rights reserved
Copyright International Organization for Standardization
Provided by IHS under license with ISO
No reproduction or networking permitted without license from IHS
Not for Resale

10.2.1.17 DISABLE

This confirmed information flow disables remote call forwarding activation. It may be sent over relationship rd and it shall contain the service elements listed in table 18.

Table 18 - Contents of DISABLE

Service elements	Allowed value	Request	Confirm
Diversion Procedure	CFU,CFB,CFNR	M	
Basic Service	all or a specific one	M	
Served User's MSN Number		O (Note 1)	
Disable Request Result	accepted/rejected		M
Cause for rejection	* service not subscribed * insufficient information * basic service not subscribed		O (Note 2)
NOTES 1. This service element shall only be included if MSN applies for user B. 2. This service element shall only be included in case of rejection.			

10.2.1.18 CHECK

This confirmed information flow is used to check if the diverted-to number and basic service(s) exist. It may be sent over relationship ri and it shall contain the service elements listed in table 19.

Table 19 - Contents of CHECK

Service elements	Allowed value	Request	Confirm
Diverted-to Number		M	
Basic Service	all or a specific one	M	
Served User's Number		M	
Check Request Result	accepted/rejected		M
Cause for rejection	* insufficient information * no valid diverted-to number * basic service not subscribed		O (Note)
NOTE - This service element shall only be included in case of rejection.			

10.2.2 Examples of information flow sequences

Signalling procedures shall be provided in support of the information flow sequences specified below. In addition, signalling procedures should be provided to cover other sequences arising from error situations, interactions with basic call, interactions with other supplementary services, different topologies , etc.

In the figures, SS-DIV information flows are represented by solid arrows and basic call information flows are represented by broken arrows. An ellipse embracing two information flows indicates that the two information flows occur together. Within a column representing an SS-DIV functional entity, the numbers refer to functional entity actions listed in 11.3.

Basic call information flows are represented only as far as necessary for the understanding of the SS-DIV procedures.

© ISO/IEC 2003 – All rights reserved

Copyright International Organization for Standardization
Provided by IHS under license with ISO
No reproduction or networking permitted without license from IHS
Not for Resale

10.2.2.1 Information flow sequences for CFU/CFB operation

The information flow sequence for successful CFU/CFB operation is shown in figure 5.

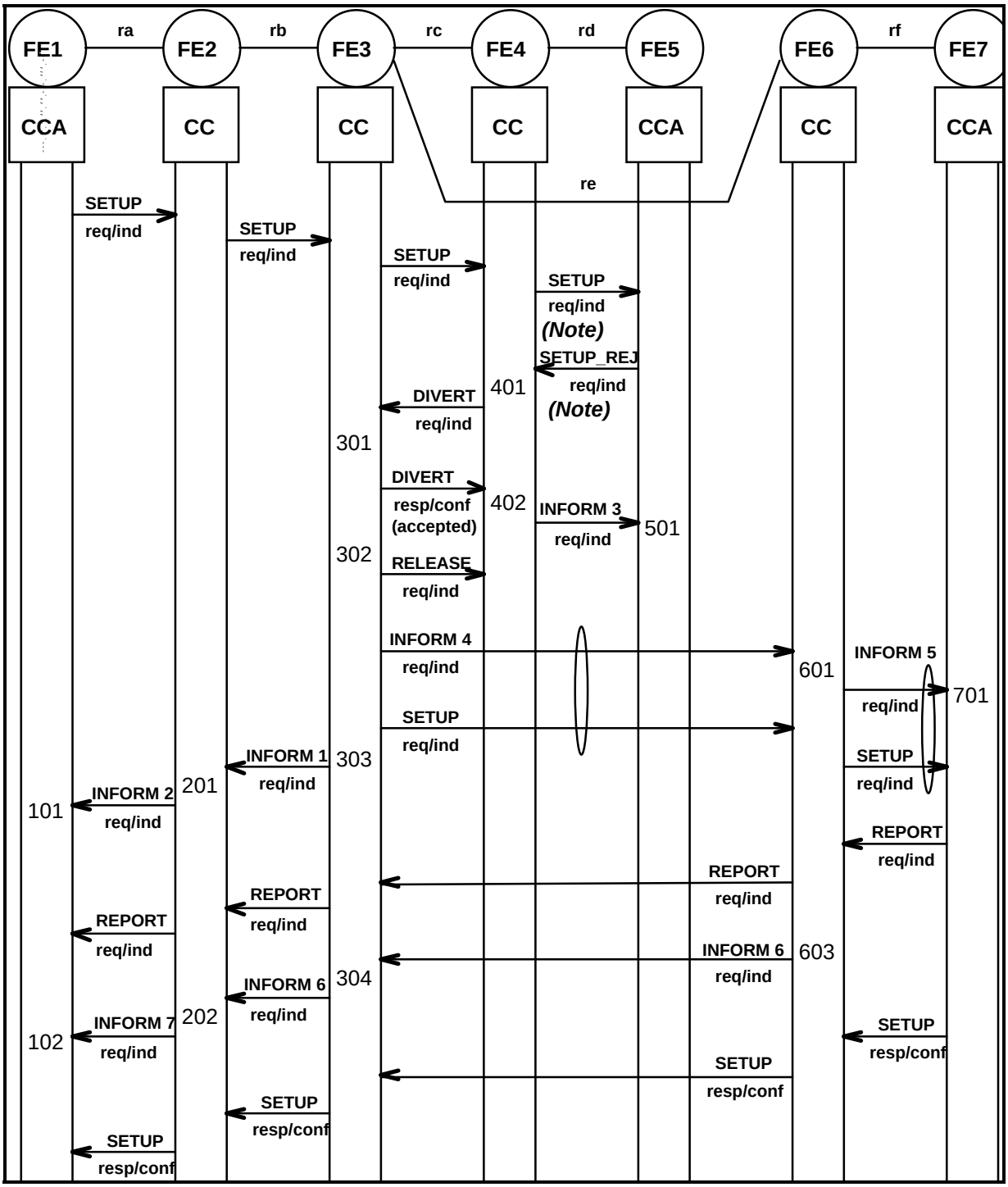

NOTE - This information flow is only applicable in case of CFB-UDUB.

Figure 5 - Information Flow Sequence for successful CFU/CFB operation

© ISO/IEC 2003 – All rights reserved
Copyright International Organization for Standardization
Provided by IHS under license with ISO
No reproduction or networking permitted without license from IHS
Not for Resale

The information flow sequences for unsuccessful CFU/CFB operation are shown in figures 6 and 7.

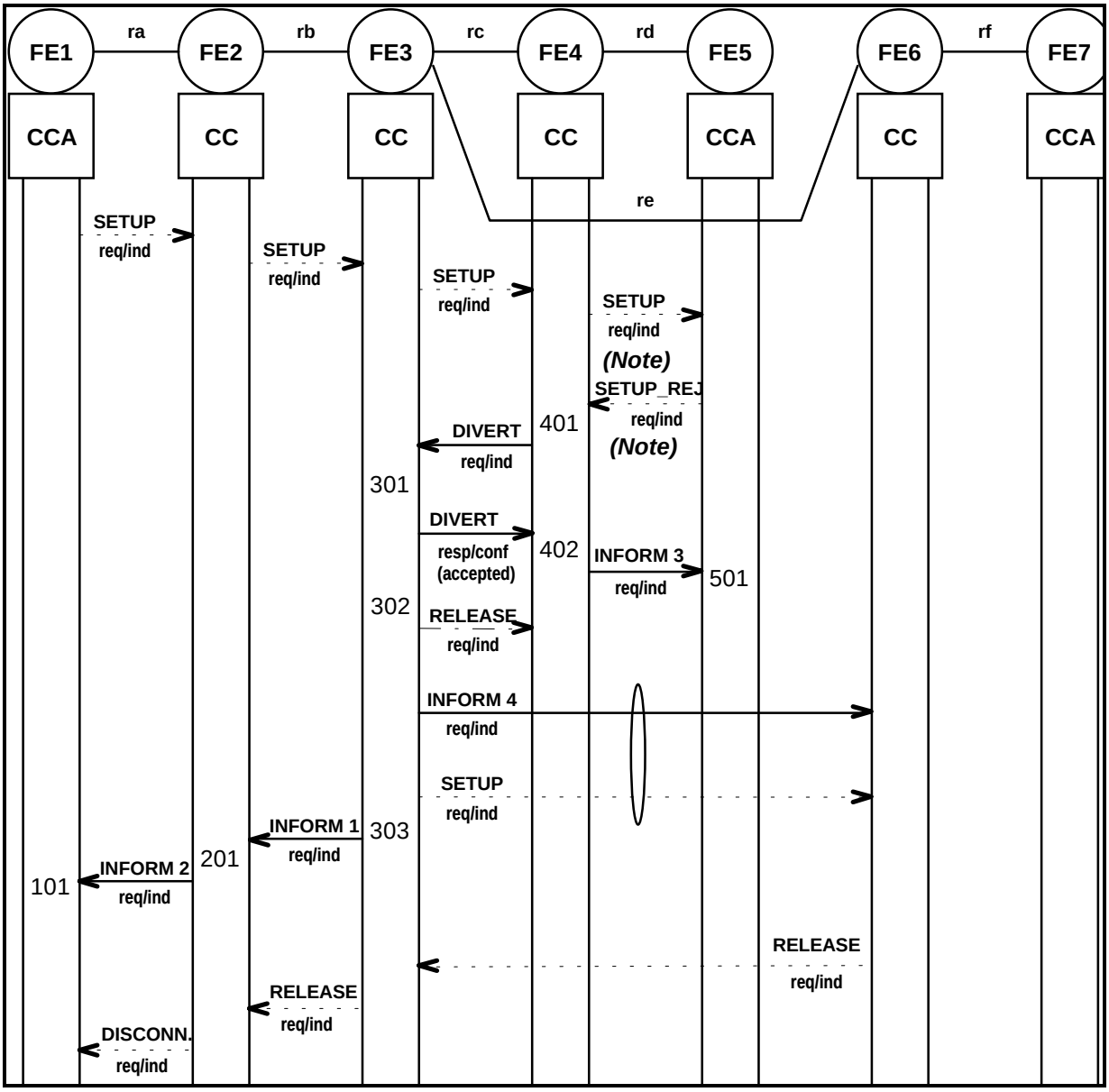

NOTE - This information flow is only applicable in case of CFB-UDUB.

Figure 6 - Information Flow Sequence for unsuccessful CFU/CFB operation: Failure of diverted call

--`,,`-`-`,,`,,`,`,,`---
© ISO/IEC 2003 – All rights reserved
Copyright International Organization for Standardization
Provided by IHS under license with ISO
No reproduction or networking permitted without license from IHS
Not for Resale

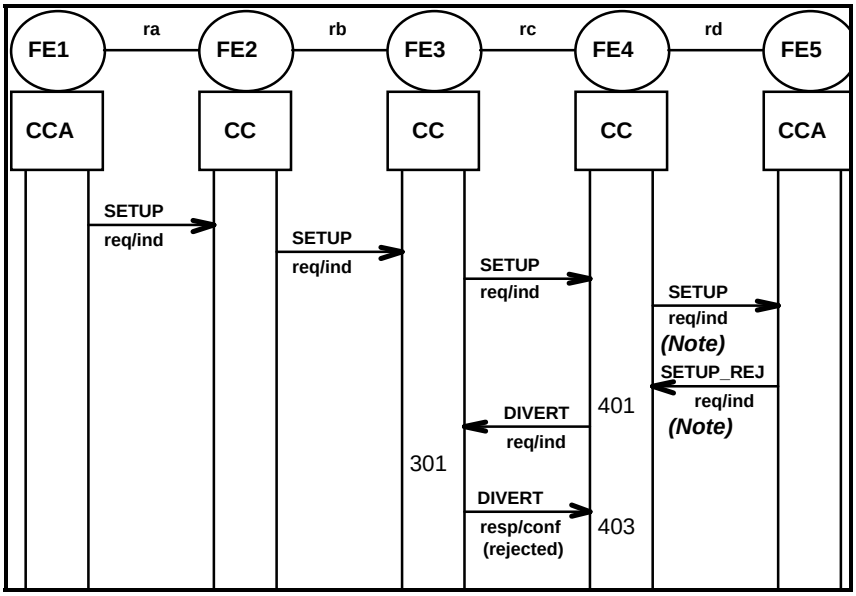

NOTE - This information flow is only applicable in case of CFB-UDUB.

Figure 7 - Information Flow Sequences for unsuccessful CFU/CFB operation: Rejection of Call Diversion

© ISO/IEC 2003 – All rights reserved
Copyright International Organization for Standardization
Provided by IHS under license with ISO
No reproduction or networking permitted without license from IHS
Not for Resale

10.2.2.2 Information flow sequences for CFNR operation

The information flow sequence for successful CFNR operation is shown in figure 8.

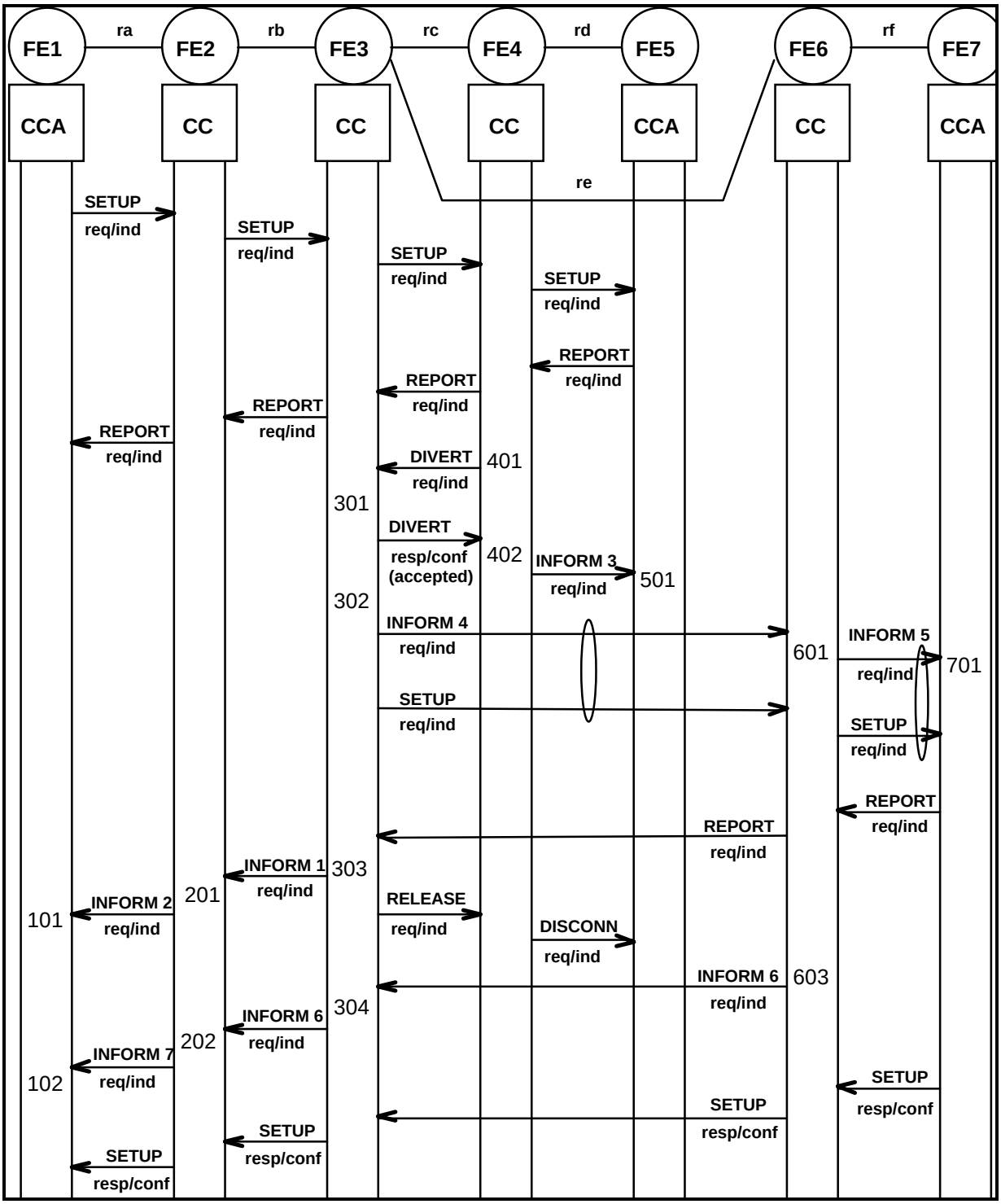

Figure 8 - Information Flow Sequence for successful CFNR operation

© ISO/IEC 2003 – All rights reserved
Copyright International Organization for Standardization
Provided by IHS under license with ISO
No reproduction or networking permitted without license from IHS
Not for Resale

The information flow sequence for clearing by user A during CFNR operation is shown in figure 9.

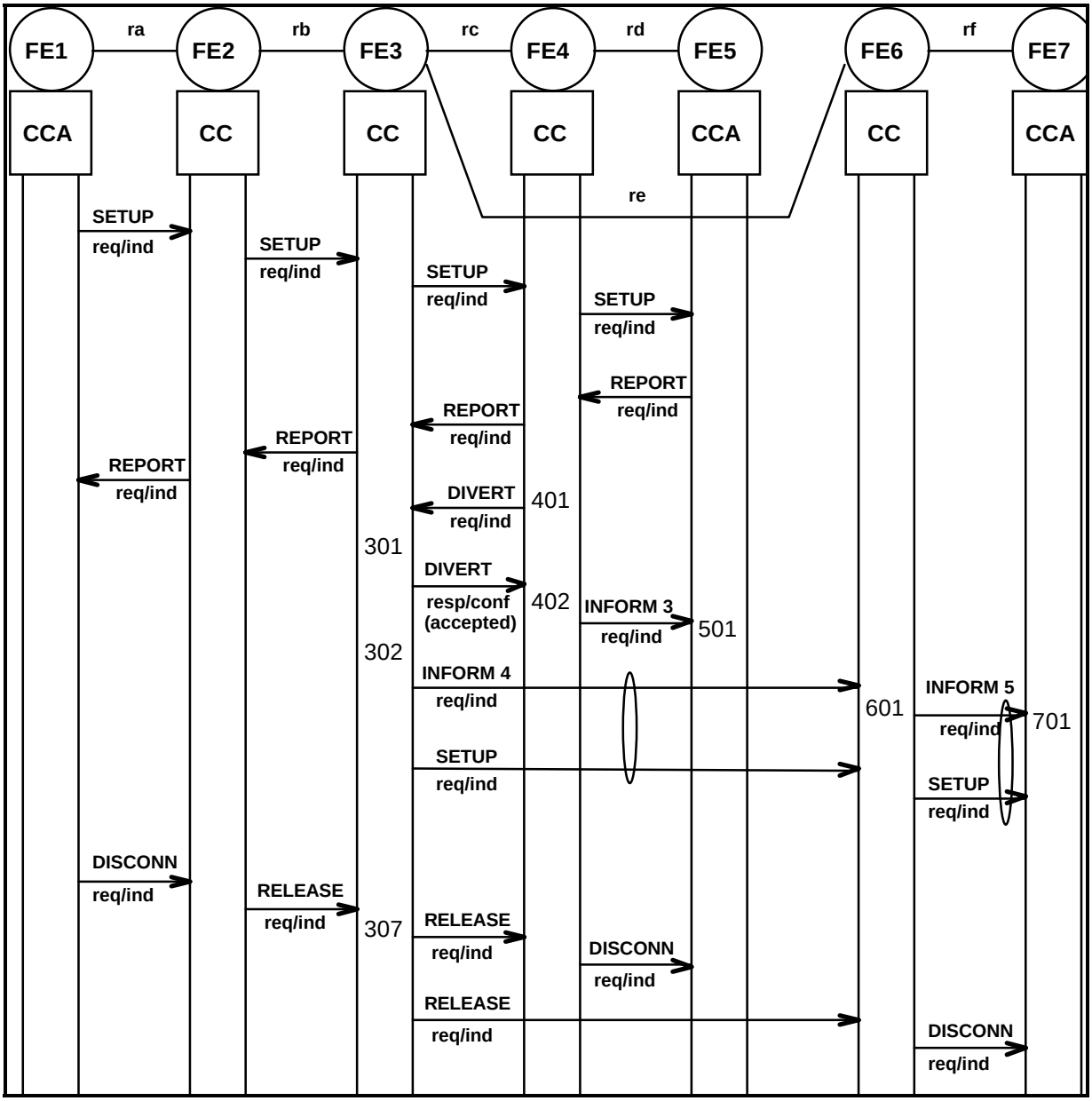

Figure 9 - Information Flow Sequence for clearing by user A during CFNR operation

© ISO/IEC 2003 – All rights reserved
Copyright International Organization for Standardization
Provided by IHS under license with ISO
No reproduction or networking permitted without license from IHS
Not for Resale

The information flow sequences for unsuccessful CFNR operation are shown in figures 10 and 11.

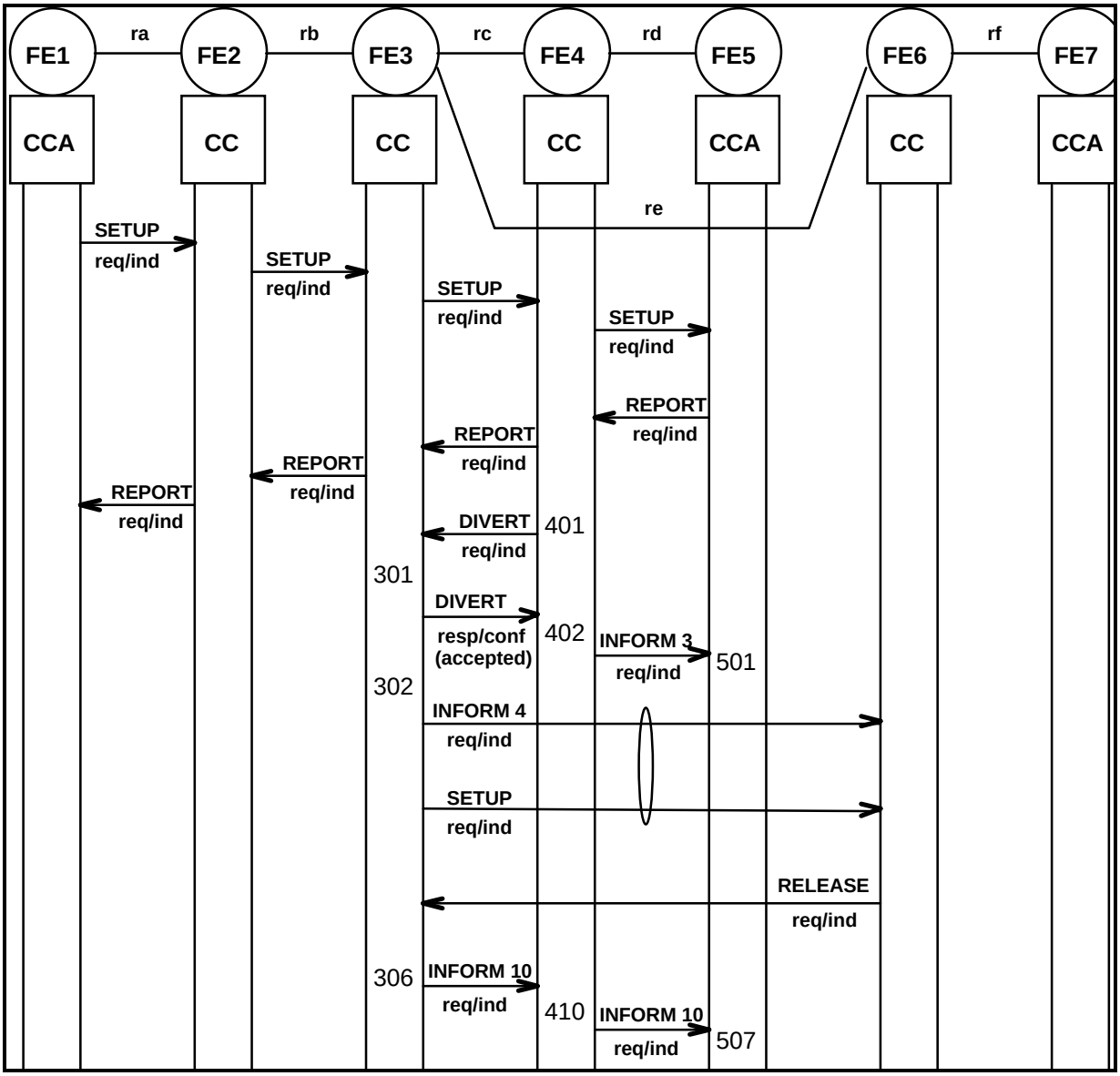

Figure 10 - Information Flow Sequences for unsuccessful CFNR operation: CFNR not completed, original call remains

© ISO/IEC 2003 – All rights reserved
Copyright International Organization for Standardization
Provided by IHS under license with ISO
No reproduction or networking permitted without license from IHS
Not for Resale

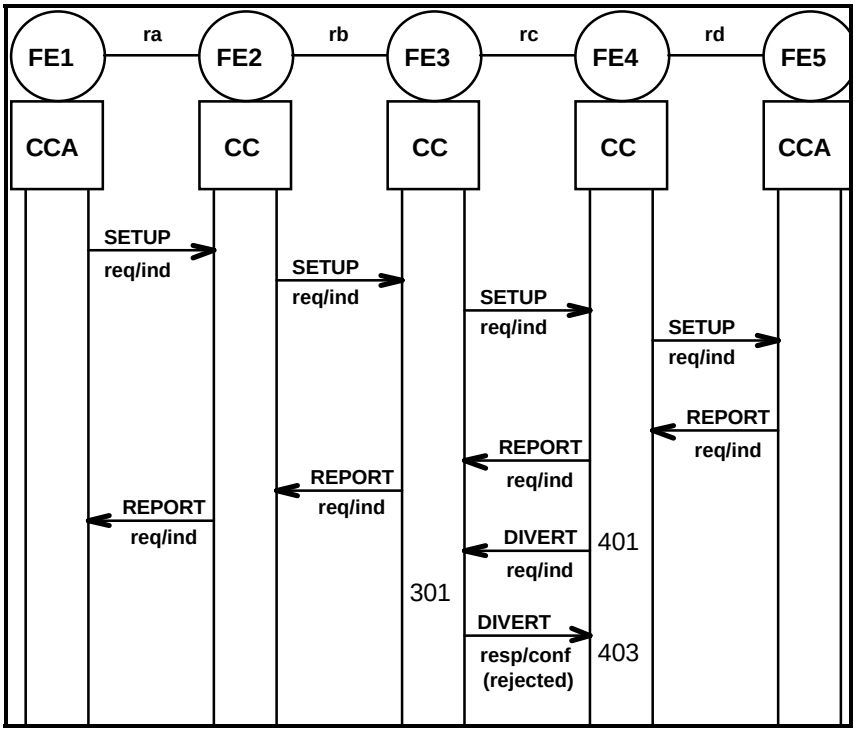

Figure 11 - Information Flow Sequences for unsuccessful CFNR operation: CFNR rejected, original call remains

© ISO/IEC 2003 – All rights reserved
Copyright International Organization for Standardization
Provided by IHS under license with ISO
No reproduction or networking permitted without license from IHS
Not for Resale

The information flow sequence if user B answers before receipt of REPORT (alerting) from user C is shown in figure 12.

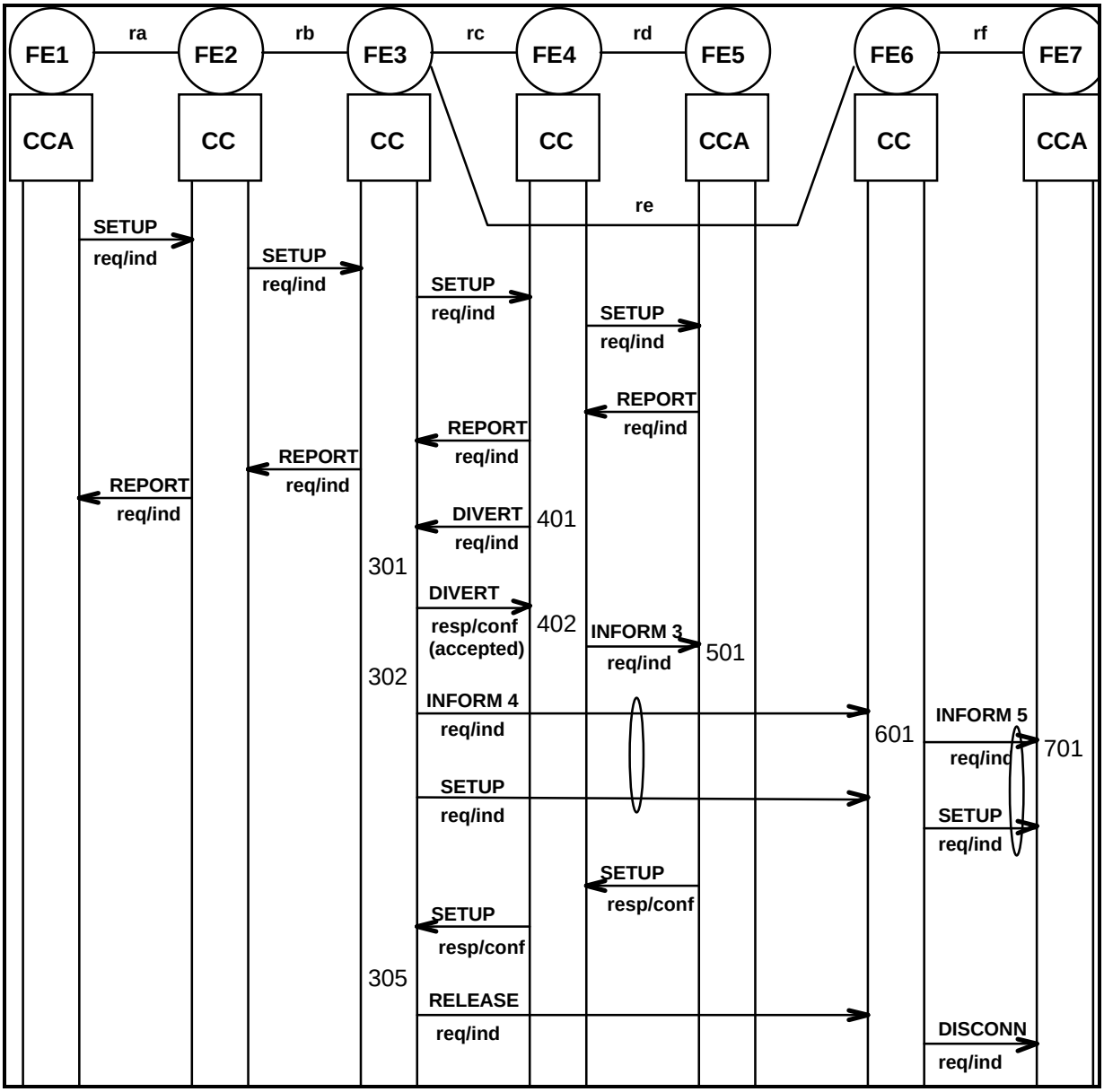

Figure 12 - Information Flow Sequence for CFNR operation:
User B answers before alerting of user C

© ISO/IEC 2003 – All rights reserved

Copyright International Organization for Standardization
Provided by IHS under license with ISO
No reproduction or networking permitted without license from IHS
Not for Resale

10.2.2.3 Information flow sequences for CD operation

The information flow sequences for successful CD operation is shown in figures 13 and 14.

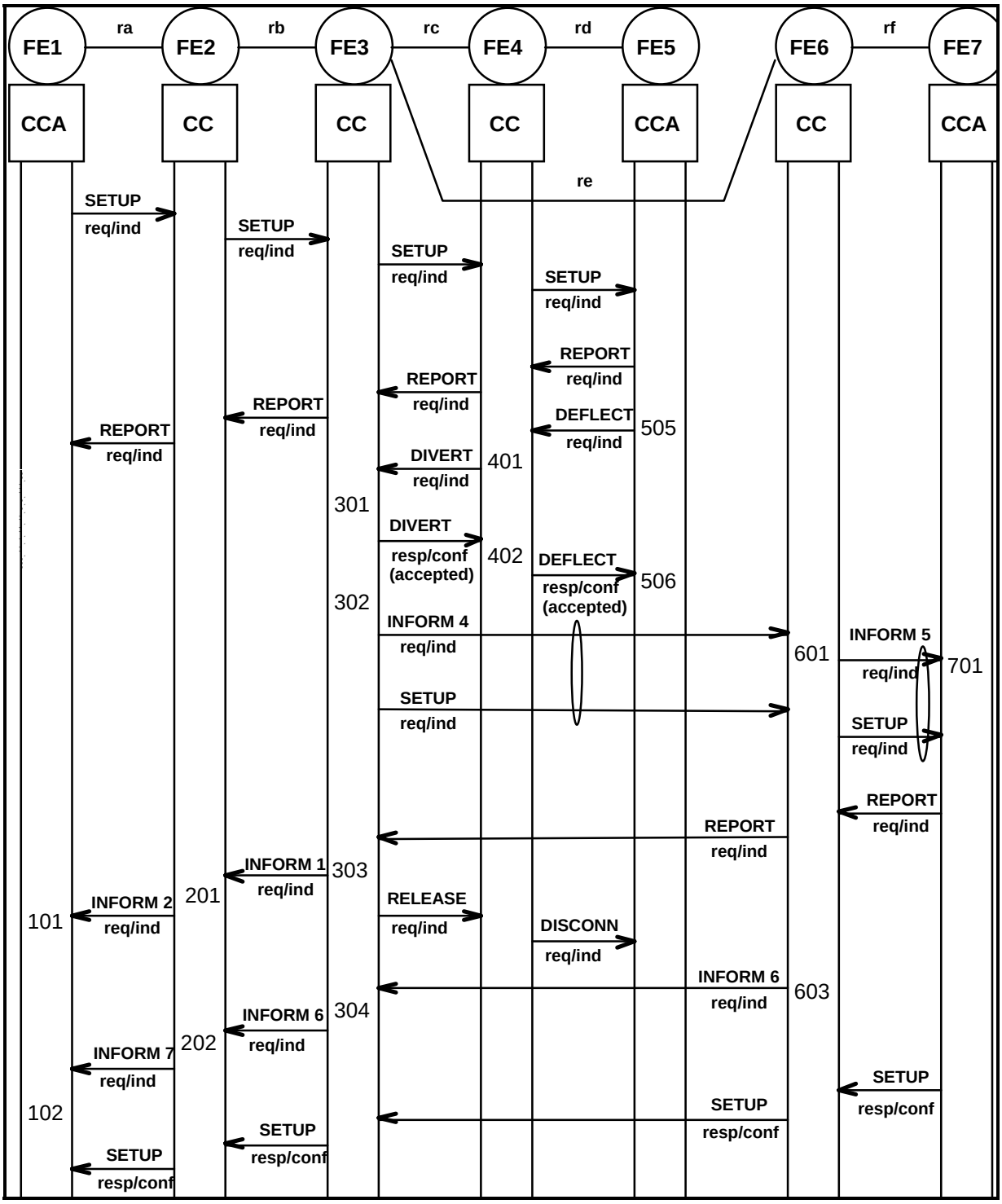

Figure 13 - Information Flow Sequence for successful Call Deflection From Alert

© ISO/IEC 2003 – All rights reserved
Copyright International Organization for Standardization
Provided by IHS under license with ISO
No reproduction or networking permitted without license from IHS
Not for Resale

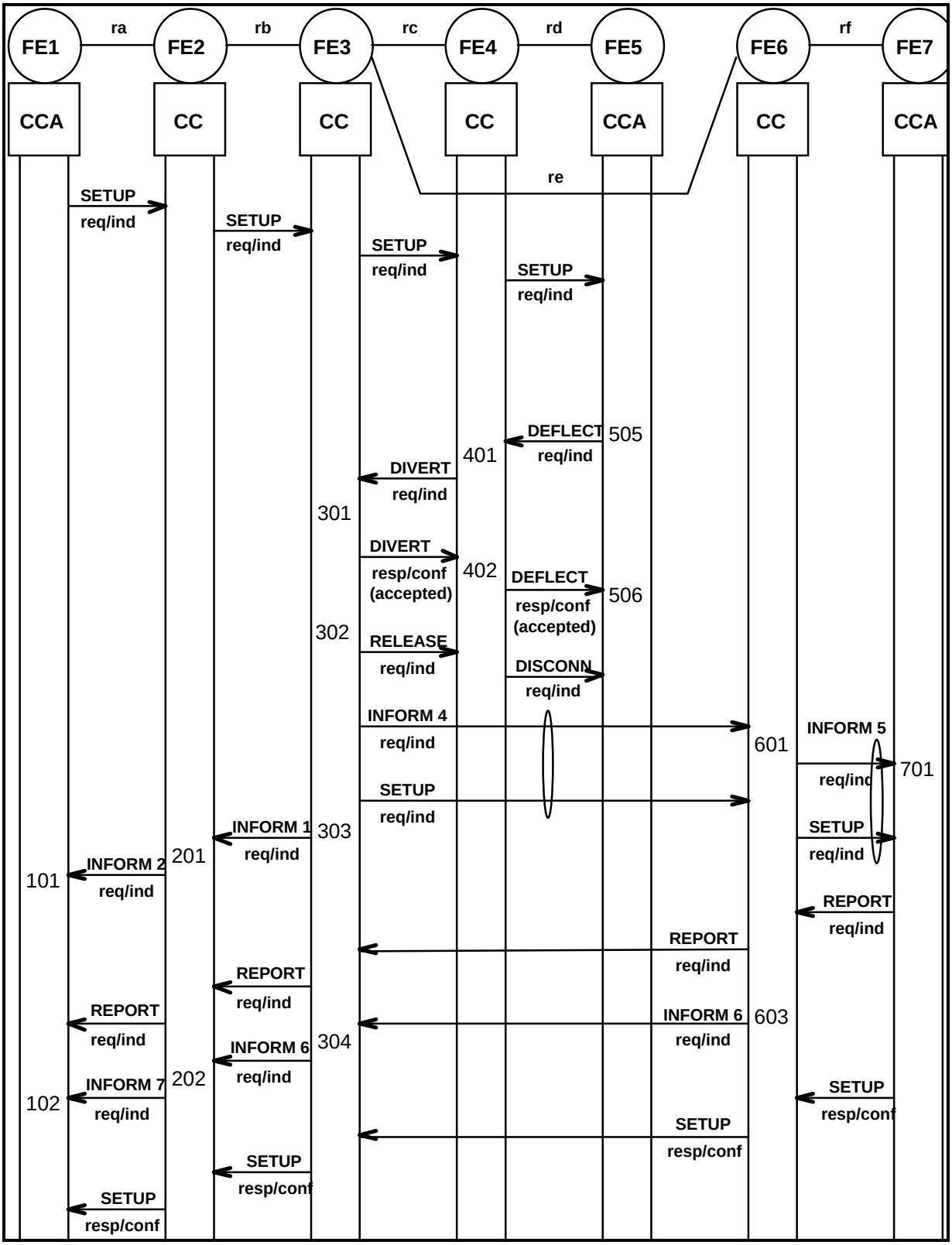

Figure 14 - Information Flow Sequence for successful Call Deflection Immediate

© ISO/IEC 2003 – All rights reserved
Copyright International Organization for Standardization
Provided by IHS under license with ISO
No reproduction or networking permitted without license from IHS
Not for Resale

The information flow sequence for clearing by user A during CDA is shown in figure 15.

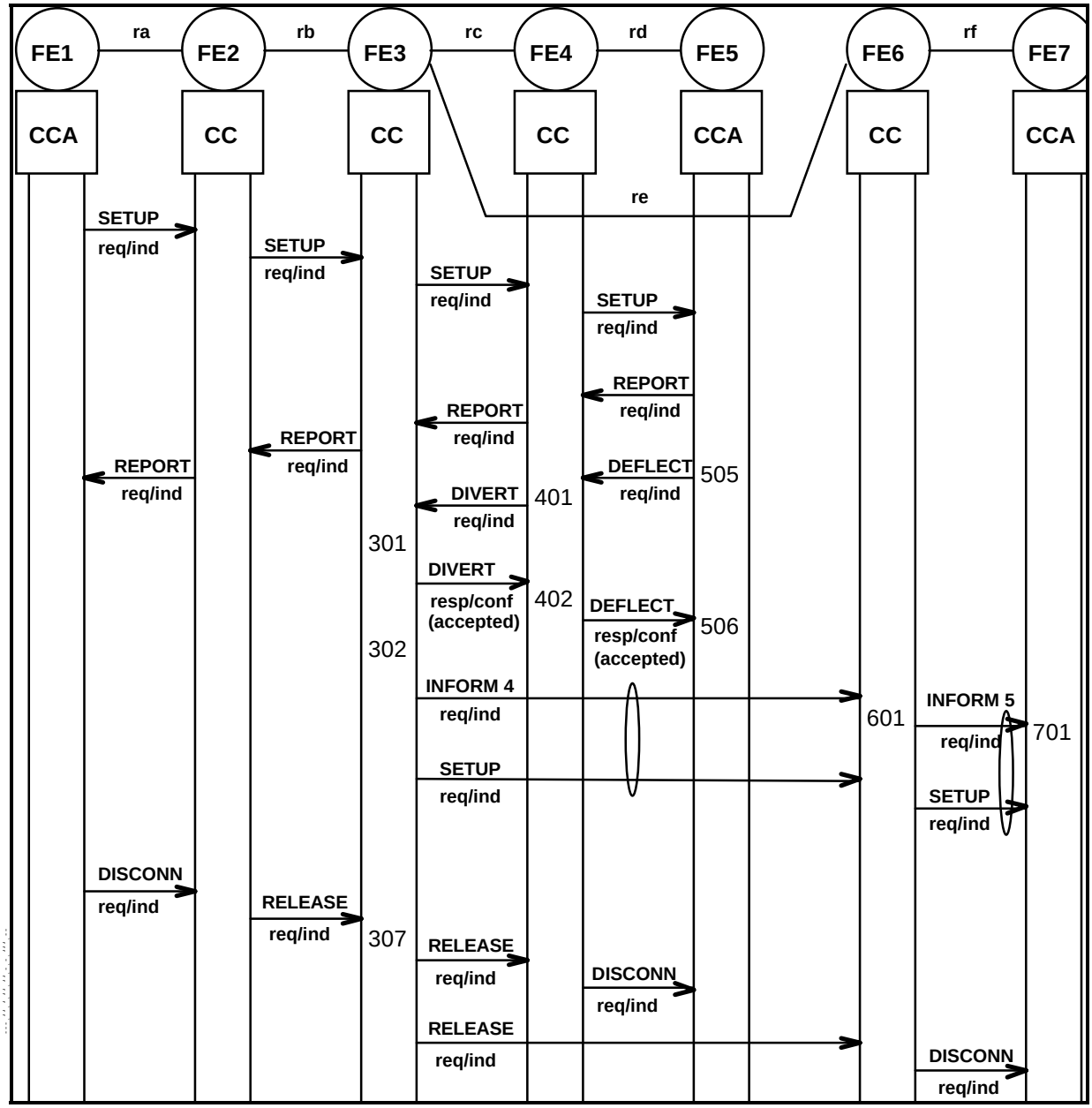

Figure 15 - Information Flow Sequence for clearing by user A during Call Deflection From Alert

© ISO/IEC 2003 – All rights reserved
Copyright International Organization for Standardization
Provided by IHS under license with ISO
No reproduction or networking permitted without license from IHS
Not for Resale

The information flow sequences for unsuccessful CD operation are shown in figures 16, 17 and 18.

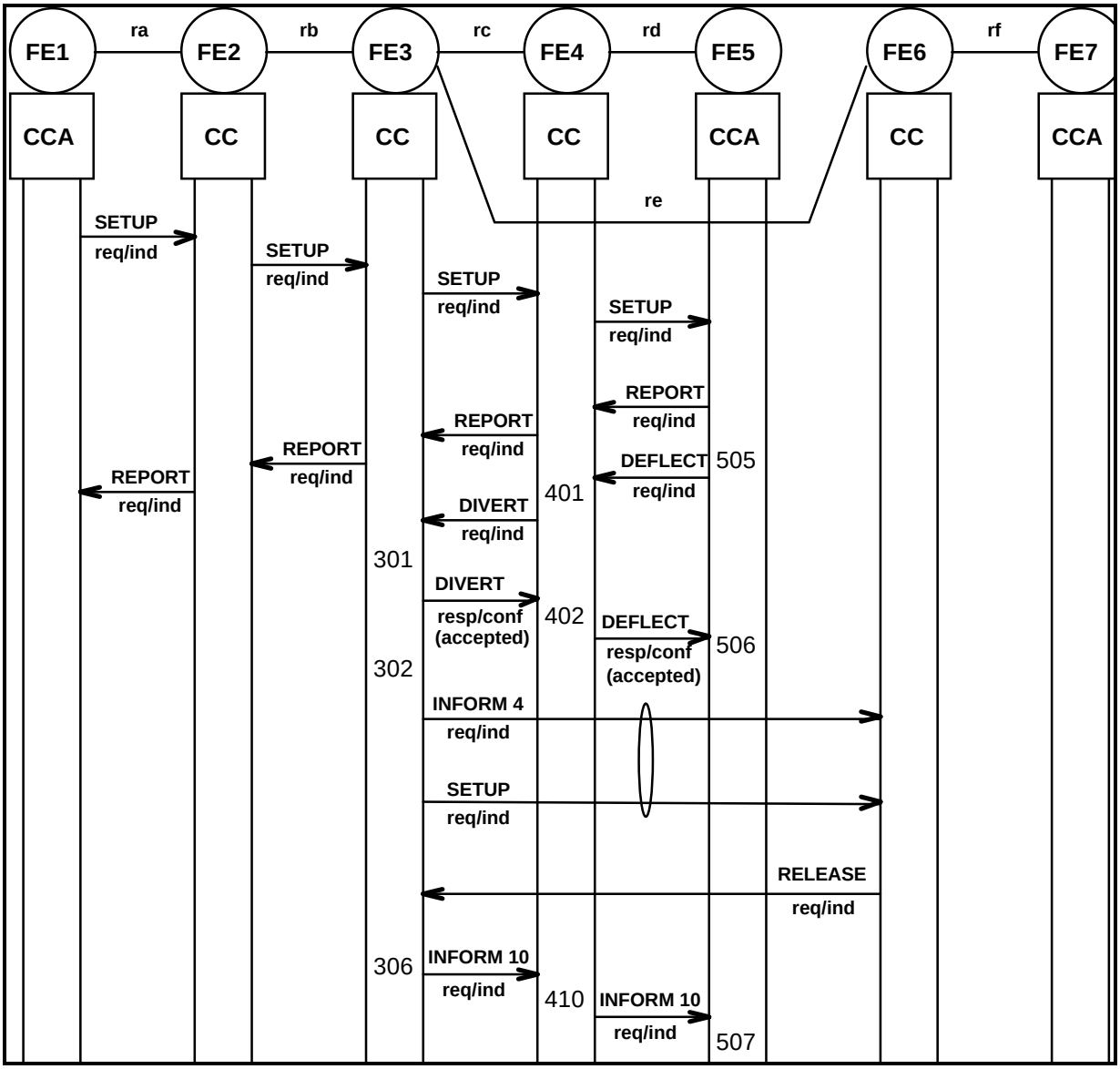

Figure 16 - Information Flow Sequence for unsuccessful Call Deflection from Alert: CD not completed, original call remains

© ISO/IEC 2003 – All rights reserved

Copyright International Organization for Standardization
Provided by IHS under license with ISO
No reproduction or networking permitted without license from IHS
Not for Resale

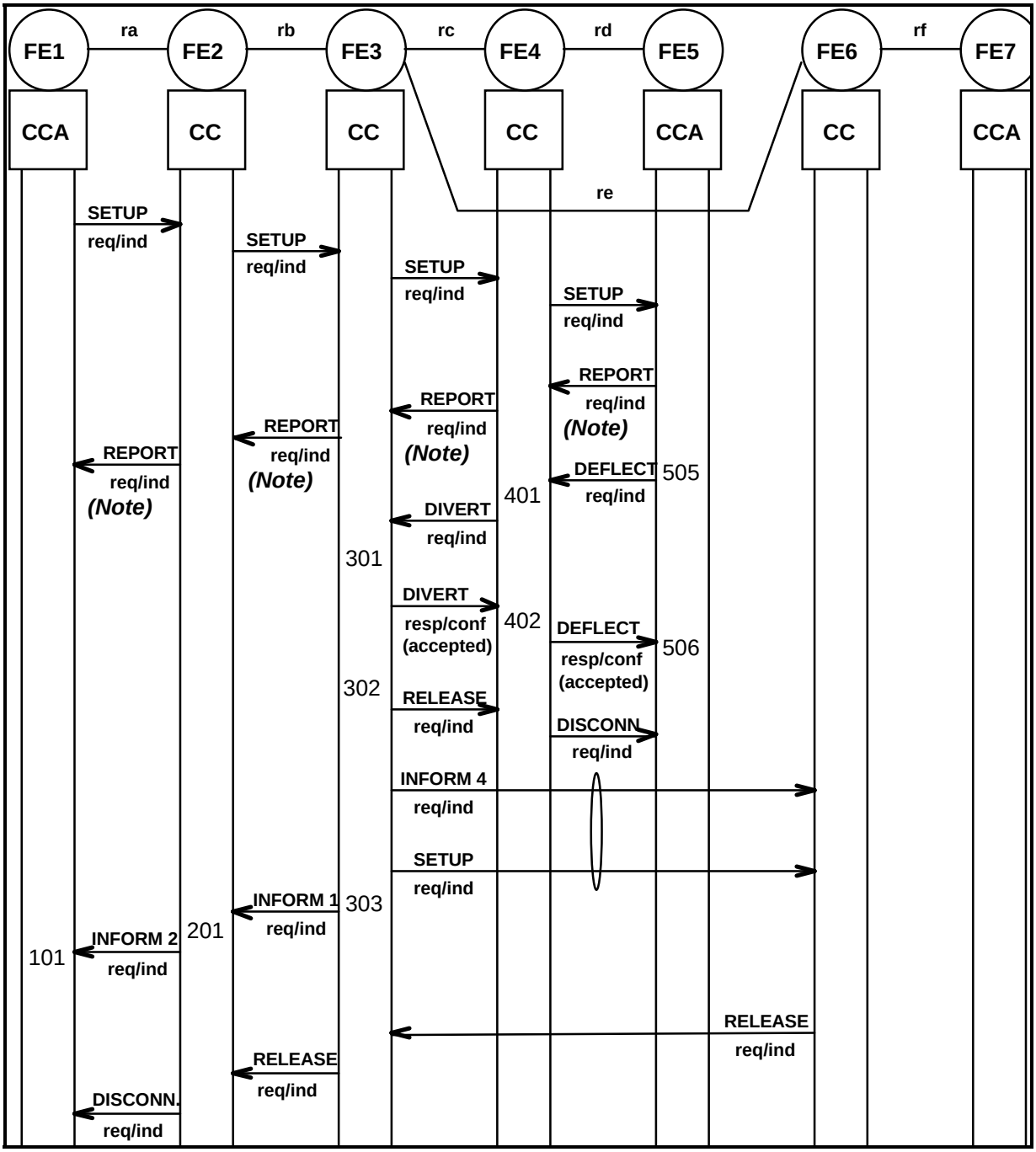

Figure 17 - Information Flow Sequence for unsuccessful Call Deflection Immediate: CD not completed, original call cleared

© ISO/IEC 2003 – All rights reserved
Copyright International Organization for Standardization
Provided by IHS under license with ISO
No reproduction or networking permitted without license from IHS
Not for Resale

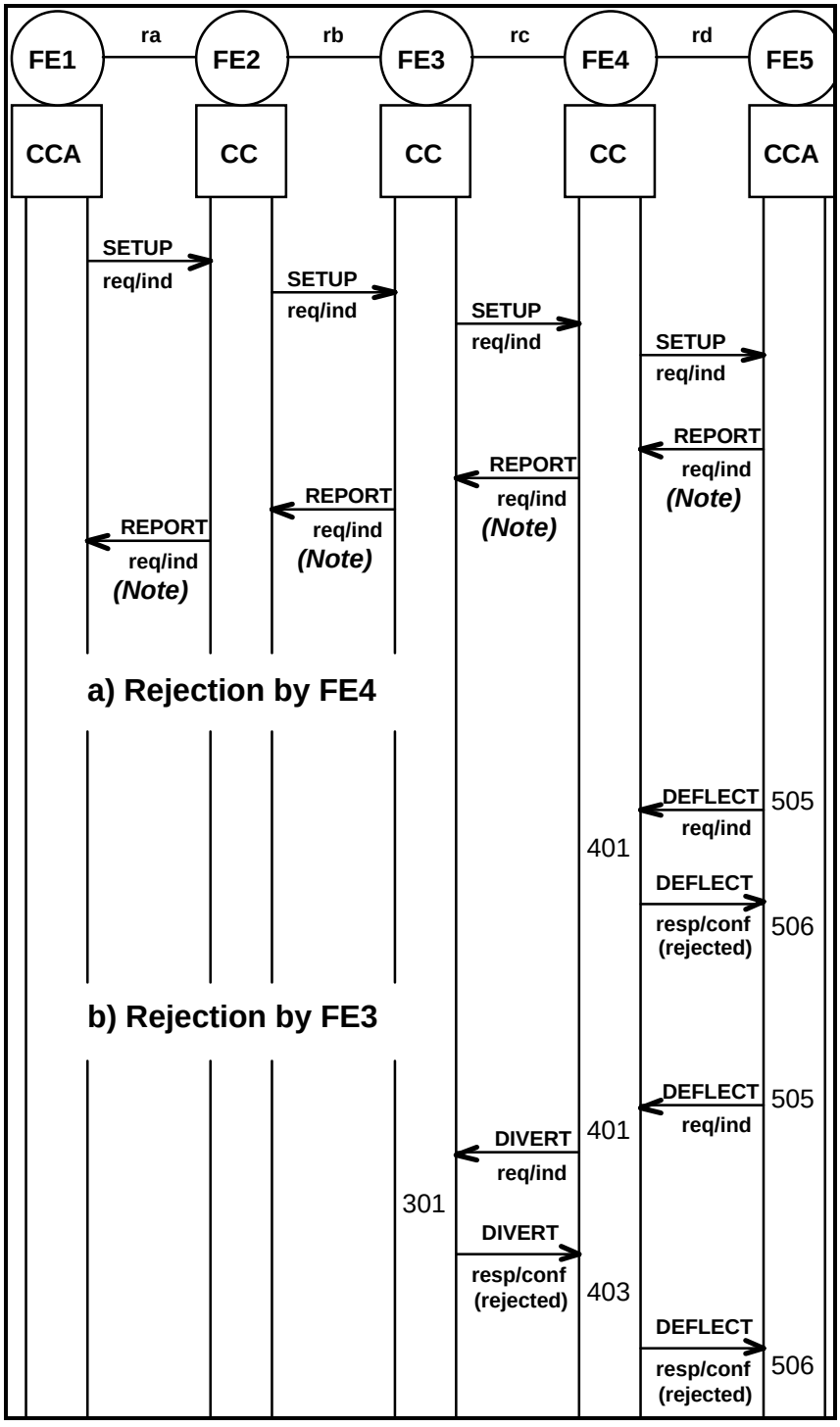

NOTE - This information flow is sent only in case of SS-CD From Alerting.

Figure 18 - Information Flow Sequence for unsuccessful Call Deflection operation: CD request rejected, original call remains

© ISO/IEC 2003 – All rights reserved
Copyright International Organization for Standardization
Provided by IHS under license with ISO
No reproduction or networking permitted without license from IHS
Not for Resale

The information flow sequence if user B answers before receipt of REPORT (alerting) from user C is shown in figure 19.

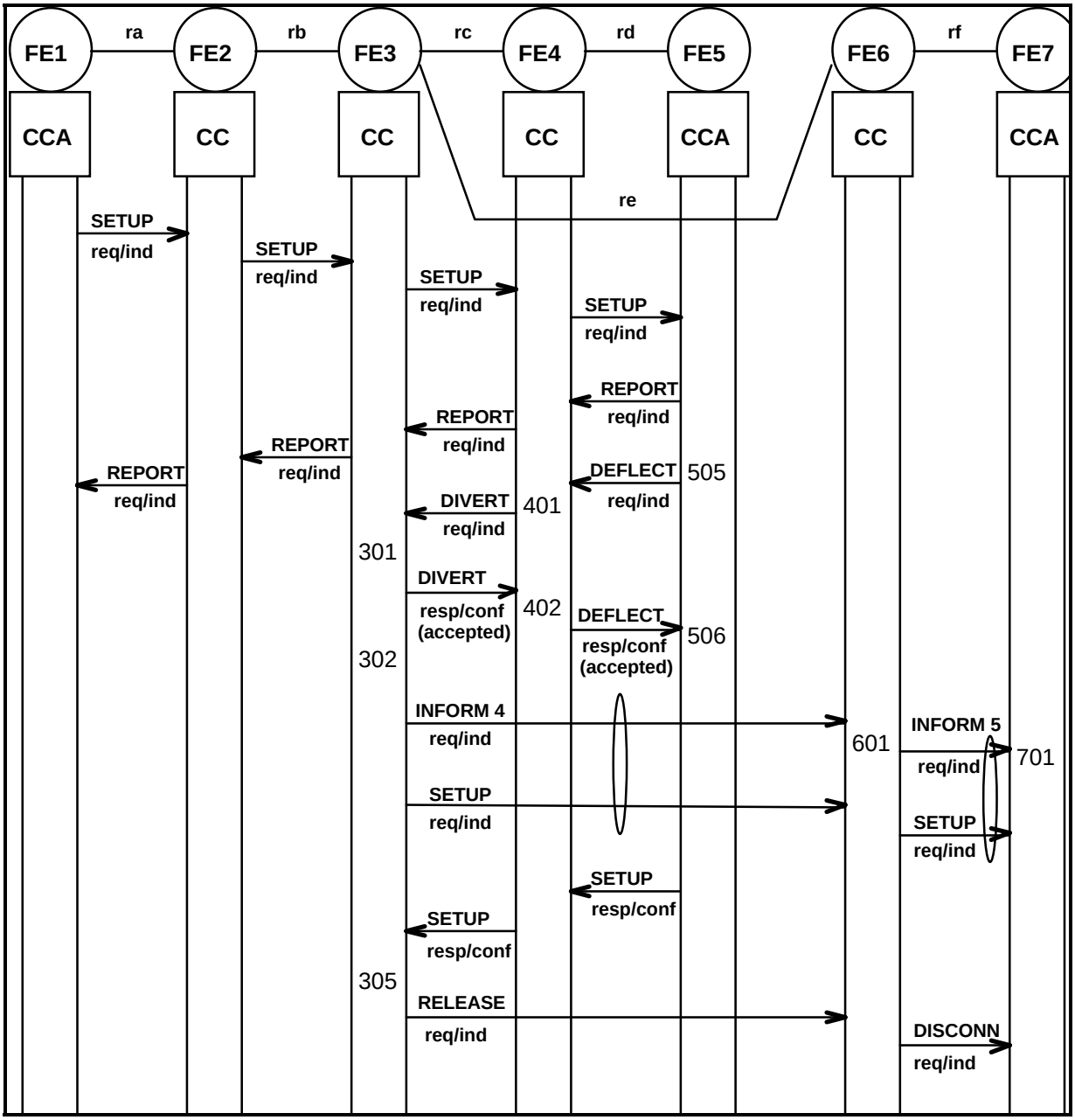

Figure 19 - Information Flow Sequence for Call Deflection fromAlerting: User B answers before alerting of user C

© ISO/IEC 2003 – All rights reserved
Copyright International Organization for Standardization
Provided by IHS under license with ISO
No reproduction or networking permitted without license from IHS
Not for Resale

10.2.2.4 Information flow sequences for SS-CF activation

The information flow sequences for activation of SS-CF are shown in figures 20 and 21.

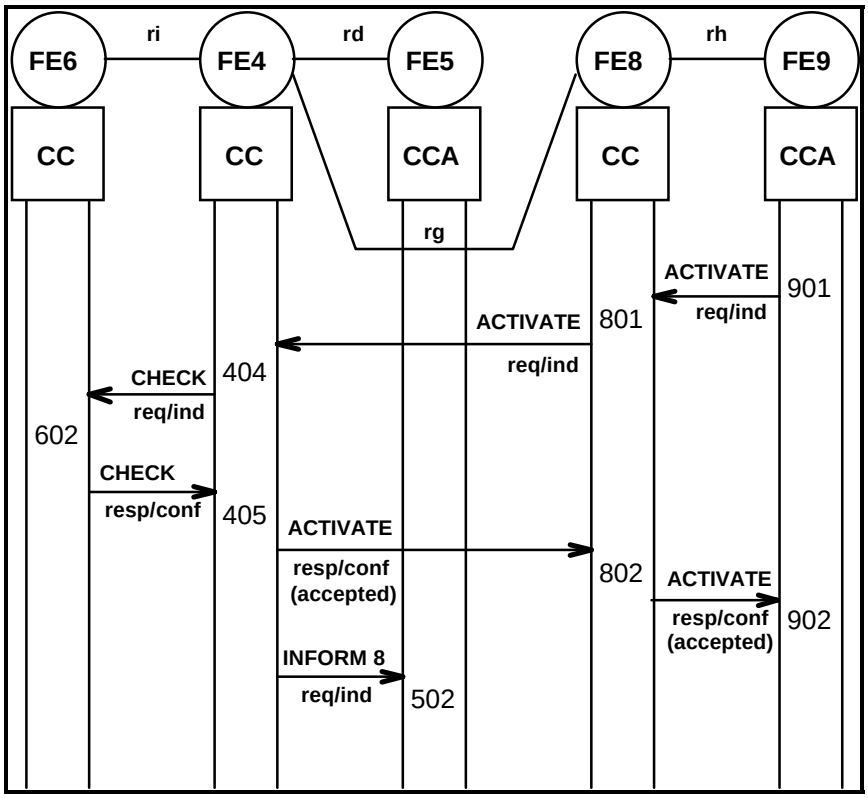

Figure 20 - Information Flow Sequence for activation with CHECK information flow

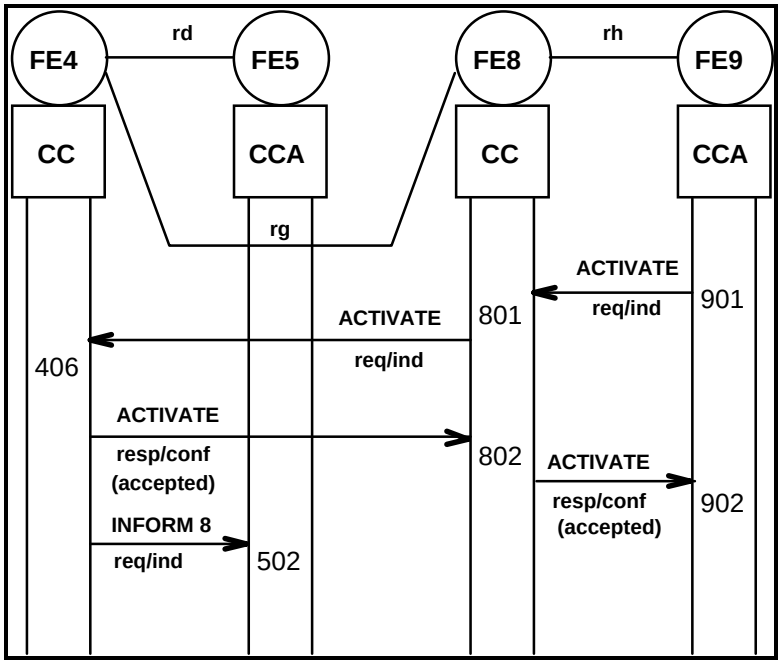

Figure 21 - Information Flow Sequence for activation without CHECK information flow

--`,,`-`-`,,`,,`,`,,`---
© ISO/IEC 2003 – All rights reserved
Copyright International Organization for Standardization
Provided by IHS under license with ISO
No reproduction or networking permitted without license from IHS
Not for Resale

10.2.2.5 Information flow sequence for SS-CF deactivation

The information flow sequences for deactivation of SS-CF is shown in figure 22.

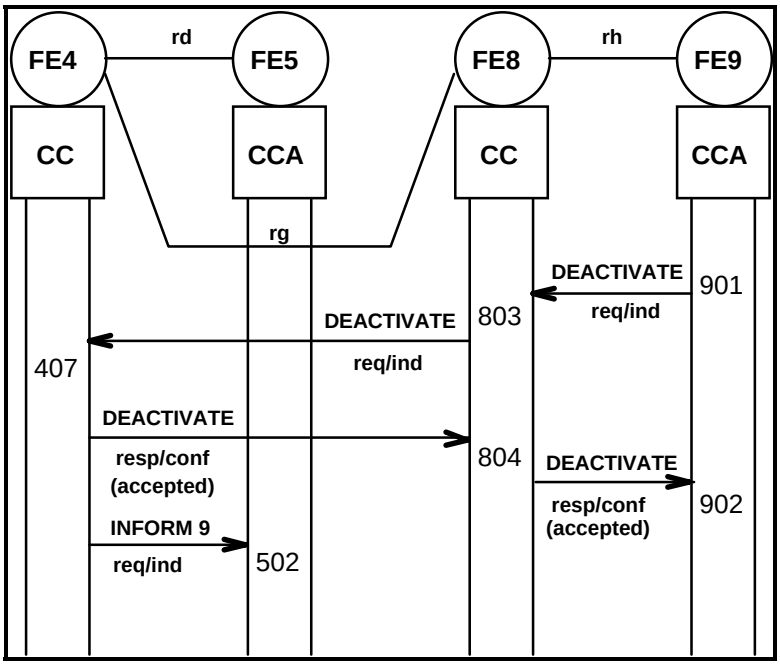

Figure 22 - Information Flow Sequence for deactivation

10.2.2.6 Information flow sequence for enabling/disabling of remote SS-CF activation

The information flow sequences for enabling/disabling of remote SS-CF activation is shown in figure 23.

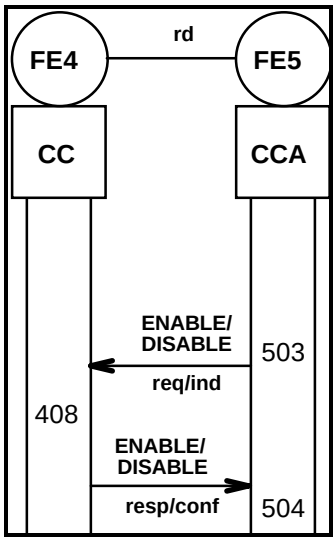

Figure 23 - Information Flow Sequence for enabling/disabling of remote activation

© ISO/IEC 2003 – All rights reserved
Copyright International Organization for Standardization
Provided by IHS under license with ISO
No reproduction or networking permitted without license from IHS
Not for Resale

10.2.2.7 Information flow sequence for SS-CF interrogation

The information flow sequences for interrogation of SS-CF is shown in figure 24.

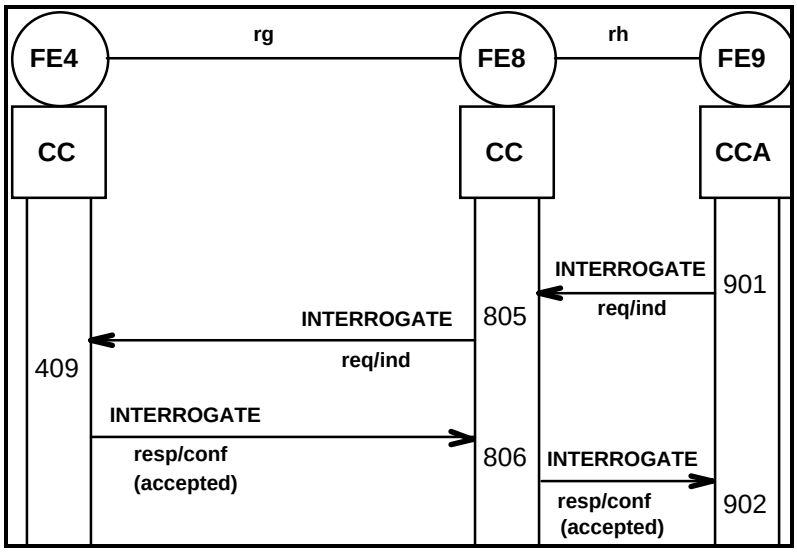

Figure 24 - Information Flow Sequences for interrogation

10.3 Functional entity actions

The following FE actions shall occur at the points indicated in the figures of 11.2.2:

10.3.1 Functional entity actions of FE1

101 Deliver call diversion notifications to the user as received from FE2 in INFORM 2 request/indication.

102 Deliver number and name notifications to the user as received in INFORM 7 request/indication from FE2.

10.3.2 Functional entity actions of FE2

201 Receive (multiple) INFORM 1 request/indication from FE3 and send each time a call diversion notification (without number information) in INFORM 2 request/indication to FE1 if allowed. Store the notification subscription options and the diverted-to number.

202 Receive INFORM 6 request/indication from FE3, get the stored notification subscription options, determine if presentation of information is allowed and send the appropriate number and name information in INFORM 7 request/indication to FE1 if allowed.

10.3.3 Functional entity actions of FE3

301 Receive DIVERT request/indication, check whether the request is allowed and valid and respond to FE4 with DIVERT response/confirmation accordingly.

302 Stimulate the basic call establishment to FE6 if the diversion request is valid. Stimulate the release procedure at leg rc (original call) in case of CFU/CDI, CFB. Send INFORM 4 request/indication to FE6.

303 Send INFORM 1 request/indication to FE2. In case of CFNR/CDA, stimulate the release procedure at leg rc on receipt of REPORT request/indication or SETUP response/confirmation from user C.

304 Relay the presentation indicator and the name received in INFORM 6 request/indication from FE6 to FE2.

305 In case of CFNR/CDA, stimulate the release procedure at the diverted-to leg (re), when user B answers before alerting of user C.

306 Send INFORM 10 request/indication to FE4 when CFNR/CDA is not completed.

307 For CFNR/CDA, stimulate release of the legs rc and re if the calling user releases the call.

© ISO/IEC 2003 – All rights reserved

Copyright International Organization for Standardization
Provided by IHS under license with ISO
No reproduction or networking permitted without license from IHS
Not for Resale

10.3.4 Functional entity actions of FE4

401 Immediate in the case of CFU, on detection of busy in the case of CFB, after a specified time interval in case of CFNR or after CD invocation by user B:

- Recognize call diversion activated and invoked from Basic Service.
- Increment the diversion counter.
- If the incremented diversion counter has exceeded the upper limit or if FE4 cannot accept a CD request, reject the diversion request and do the following:
  – for CFU/CFB either release the call or override call diversion (implementation options),
  – for CFNR maintain the original call,
  – for CD maintain the original call and send a DEFLECT response/ confirmation (rejected) to FE5.
- If the incremented diversion counter is not above the upper limit and, in cases of CD, if FE4 accepts the CD request, then send a DIVERT request/ indication to FE3.

402 Receive the positive DIVERT response/confirmation from FE3 and send

– INFORM 3 request/indication to FE5 in case of CFU, CFB and CFNR,
– DEFLECT response/confirm (accepted) in case of CD.

For Diversions from Alert new diversion requests shall not be accepted unless an INFORM 10 request/ indication is received.

403 Receive the negative DIVERT response/confirmation from FE3. For CFU/CFB: stimulate release of the call to the calling user or perform an implementation specific procedure, e.g. send DIVERT request/indication to an FE3 at a different location. For CFNR: maintain the original call to the served user or perform an implementation specific procedure, e.g. send DIVERT request/indication to an FE3 at a different location.

In case of CD send a DEFLECT response/confirmation (rejected) to FE5 and maintain the original call to the served user.

404 Validate received ACTIVATE request/indication and send a CHECK request/indication to FE6 in order to check if the diverted-to number and basic service(s) exist.

405 On receipt of a CHECK response/confirmation, further validate received ACTIVATE request/indication and respond to FE8 with ACTIVATE response/confirmation. Inform FE5 of a successful activation (INFORM 8 request/indication).

406 Validate received ACTIVATE request/indication and respond to FE8 with ACTIVATE response/ confirmation. Inform FE5 of a successful activation (INFORM 8 request/indication).

407 Validate received DEACTIVATE request/indication and respond to FE8 with DEACTIVATE response/ confirmation. Inform FE5 of a successful deactivation (INFORM 9 request/indication).

408 Validate received ENABLE/DISABLE request/indication and respond to FE5 with ENABLE/DISABLE response/confirmation.

409 Validate received INTERROGATE request/indication and respond to FE8 with INTERROGATE response/ confirmation.

410 Relay optionally INFORM 10 request/indication from FE3 to FE5 if received, if an INFORM 3 request/ indication or a DEFLECT response/confirmation has previously been sent. New diversions shall now be allowed.

10.3.5 Functional entity actions of FE5

501 Deliver notifications to the user as received from FE4 in INFORM 3 request/indication.

502 Deliver notifications on activation and deactivation to the user as received from FE4.

503 Send enable/disable requests to FE4 as received from the user.

504 Deliver enable/disable responses to the user as received from FE4.

505 Send CD request to FE4 as received from the user B in DEFLECT request/indication.

506 Deliver notifications to user B as received from FE4 in DEFLECT response/confirmation.

© ISO/IEC 2003 – All rights reserved
Copyright International Organization for Standardization
Provided by IHS under license with ISO
No reproduction or networking permitted without license from IHS
Not for Resale

507 Inform the user that CFNR/CDA has failed.

10.3.6 Functional entity actions of FE6

601 Determine if presentation of the number and the name information received from FE3 in INFORM 4 request/indication is allowed and send INFORM 5 request/indication to FE7. Store the last diversion number and original called number and associated presentation restriction indicators for further multiple call diversions.

602 Receive CHECK request/indication from FE4, check optionally if the diverted-to number and basic service(s) exist, and respond to FE4 with CHECK response/confirmation.

603 Send the presentation indicator of the diverted-to user's number and the name of the diverted-to user either on receipt of REPORT request/indication (alerting) if possible or at latest on answer of the basic call to FE3 in INFORM 6 request/indication.

10.3.7 Functional entity actions of FE7

701 Deliver notifications to the diverted-to user as received from FE6.

10.3.8 Functional entity actions of FE8

801 Receive ACTIVATE request/indication from FE9. Perform address checking and either relay the ACTIVATE request/indication to FE4 or send a negative ACTIVATE response/confirmation to FE9.

802 Receive ACTIVATE response/confirmation from FE4 and relay it to FE9.

803 Receive DEACTIVATE request/indication from FE9. Perform address checking and either relay the DEACTIVATE req/ind to FE4 or send a negative DEACTIVATE response/confirmation to FE9.

804 Receive DEACTIVATE response/confirmation from FE4 and relay it to FE9.

805 Receive INTERROGATE request/indication from FE9. Perform address checking and either relay the INTERROGATE request/indication to FE4 or send a negative INTERROGATE response/confirmation to FE9.

806 Receive INTERROGATE response/confirmation from FE4 and relay it to FE9.

10.3.9 Functional entity actions of FE9

901 Send activation/deactivation/interrogation requests to FE8 as received from the user.

902 Deliver activation/deactivation/interrogation responses to the user as received from FE8.

10.4 Functional entity behaviour

The figures in this clause are intended to illustrate typical FE behaviour in terms of information flows sent and received.

The behaviour of each FE is shown using the Specification and Description Language (SDL) defined in ITU-T Rec. Z.100.

10.4.1 Behaviour of FE1

Figure 25 contains the SDL diagram for the functional entity FE1.

- Input signals from the right represent information flows from FE2.
- Output signals to the left represent primitives to the user.

--`,,`-`-`,,`,,`,`,,`---
© ISO/IEC 2003 – All rights reserved

Copyright International Organization for Standardization
Provided by IHS under license with ISO
No reproduction or networking permitted without license from IHS
Not for Resale

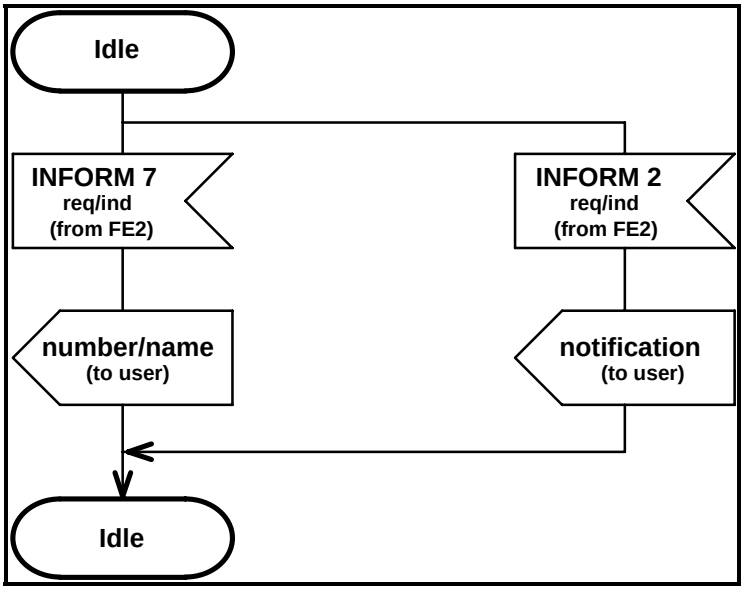

Figure 25 - SDL for Functional Entity FE1

10.4.2 Behaviour of FE2

Figure 26 contains the SDL diagram for the functional entity FE2.

- Input signals from the left represent primitives from local CC.
- Input signals from the right represent information flows from FE3.
- Output signals to the left represent information flows to FE1.

--`,,,`-`-`,,`,,`,`,,`---
© ISO/IEC 2003 – All rights reserved
Copyright International Organization for Standardization
Provided by IHS under license with ISO
No reproduction or networking permitted without license from IHS
Not for Resale

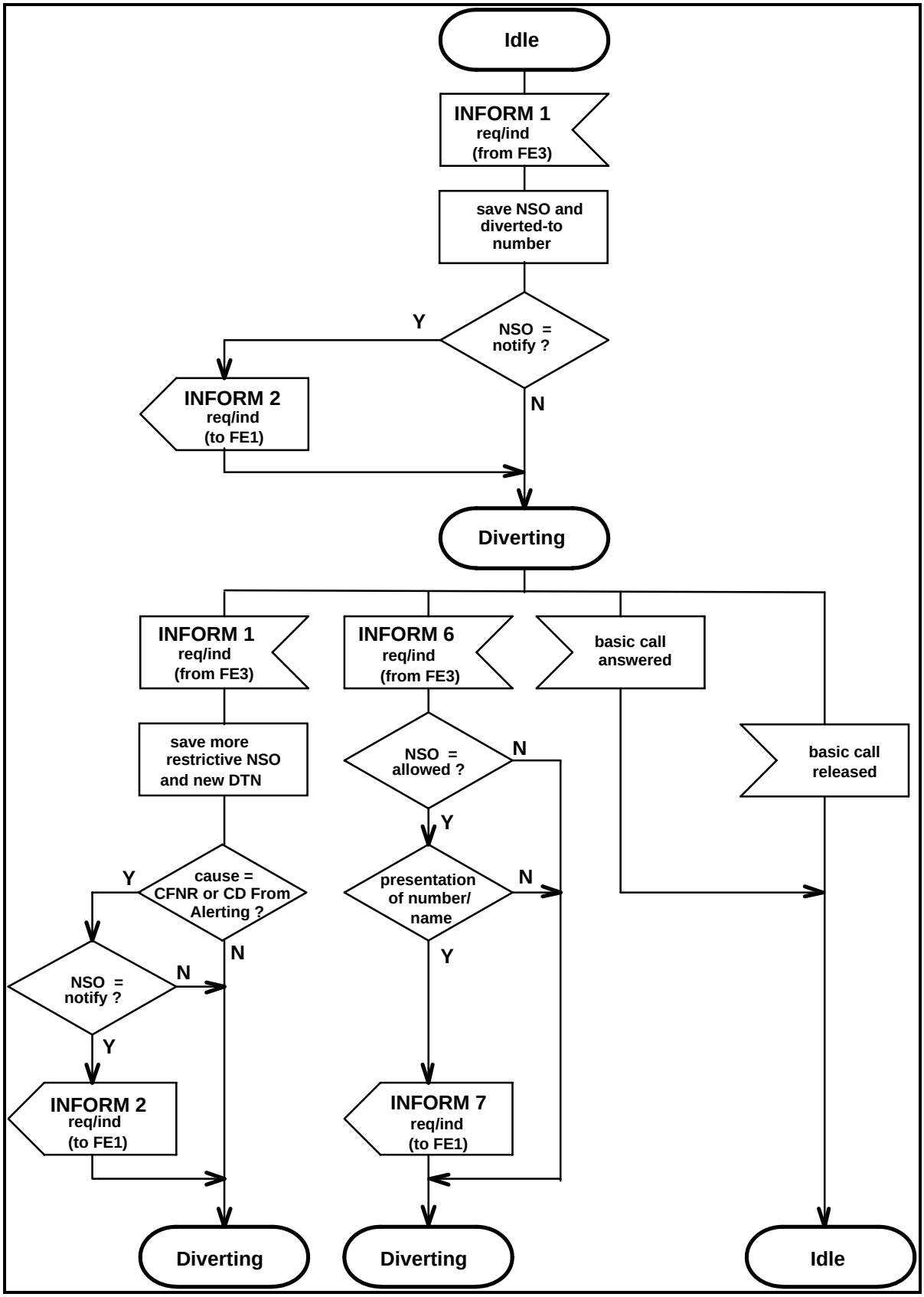

Figure 26 - SDL for Functional Entity FE2

© ISO/IEC 2003 – All rights reserved
Copyright International Organization for Standardization
Provided by IHS under license with ISO
No reproduction or networking permitted without license from IHS
Not for Resale

10.4.3 Behaviour of FE3

Figure 27 contains the SDL diagram for the functional entity FE3.

- Input signals from the left represent primitives from local CC.
- Input signals from the right represent information flows from other functional entities.
- Output signals to the right and to the left represent information flows to other function al entities.

The relationship to the basic call process is also indicated in task symbols or in the annotations.

--`,,,`--`-`-`,,`,,`,`,,`---

© ISO/IEC 2003 – All rights reserved
Copyright International Organization for Standardization
Provided by IHS under license with ISO
No reproduction or networking permitted without license from IHS
Not for Resale

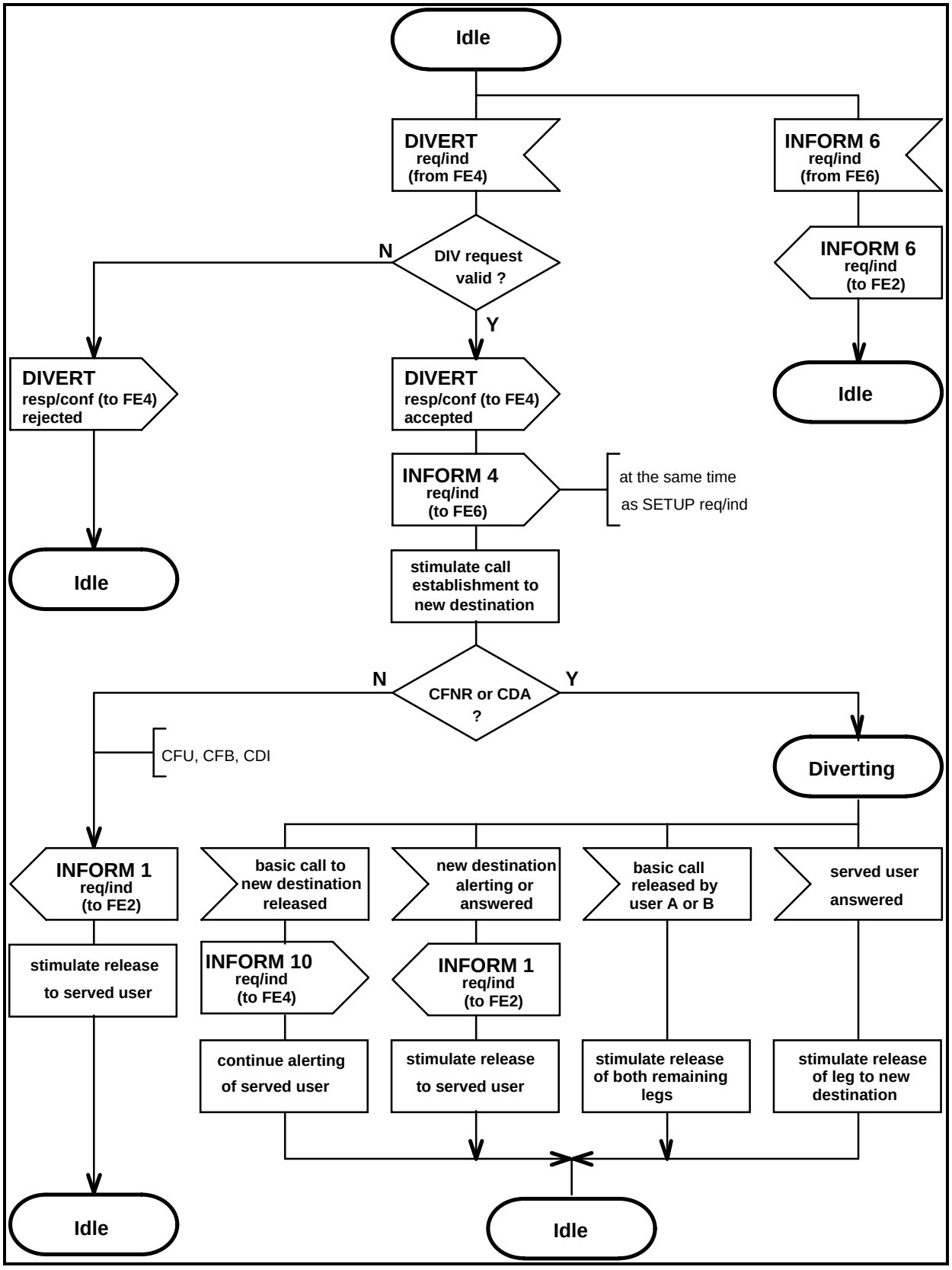

Figure 27 - SDL for Functional Entity FE3

--`,,,`-`-`,,`,,`,`,,`---
© ISO/IEC 2003 – All rights reserved
Copyright International Organization for Standardization
Provided by IHS under license with ISO
No reproduction or networking permitted without license from IHS
Not for Resale

10.4.4 Behaviour of FE4

Figures 28, 29 and 30 contain the SDL diagram for the functional entity FE4.

- Input signals from the left represent information flows from other functional entities or primitives from local CC.
- Input signals from the right represent information flows from other functional entities or internal stimuli.
- Output signals to the right and to the left represent information flows to other functional entities.

The relationship to the basic call process is also indicated in task symbols or in the annotations.

NOTE - The interaction between multiple invocations of CFNR and/or CDA is not taken into account.

© ISO/IEC 2003 – All rights reserved
Copyright International Organization for Standardization
Provided by IHS under license with ISO
No reproduction or networking permitted without license from IHS
Not for Resale

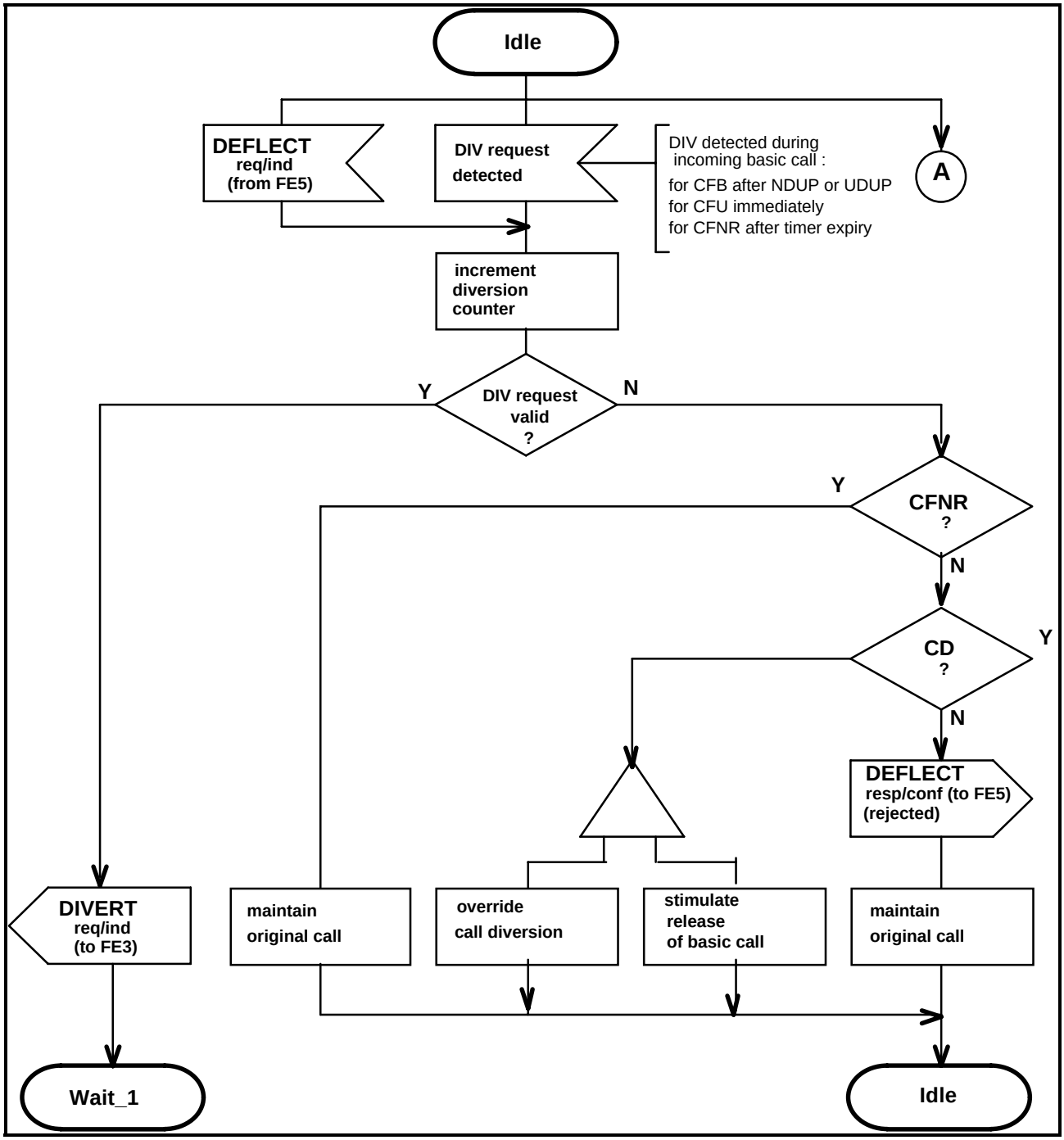

Figure 28 - SDL for Functional Entity FE4 (part 1)

© ISO/IEC 2003 – All rights reserved
Copyright International Organization for Standardization
Provided by IHS under license with ISO
No reproduction or networking permitted without license from IHS
Not for Resale

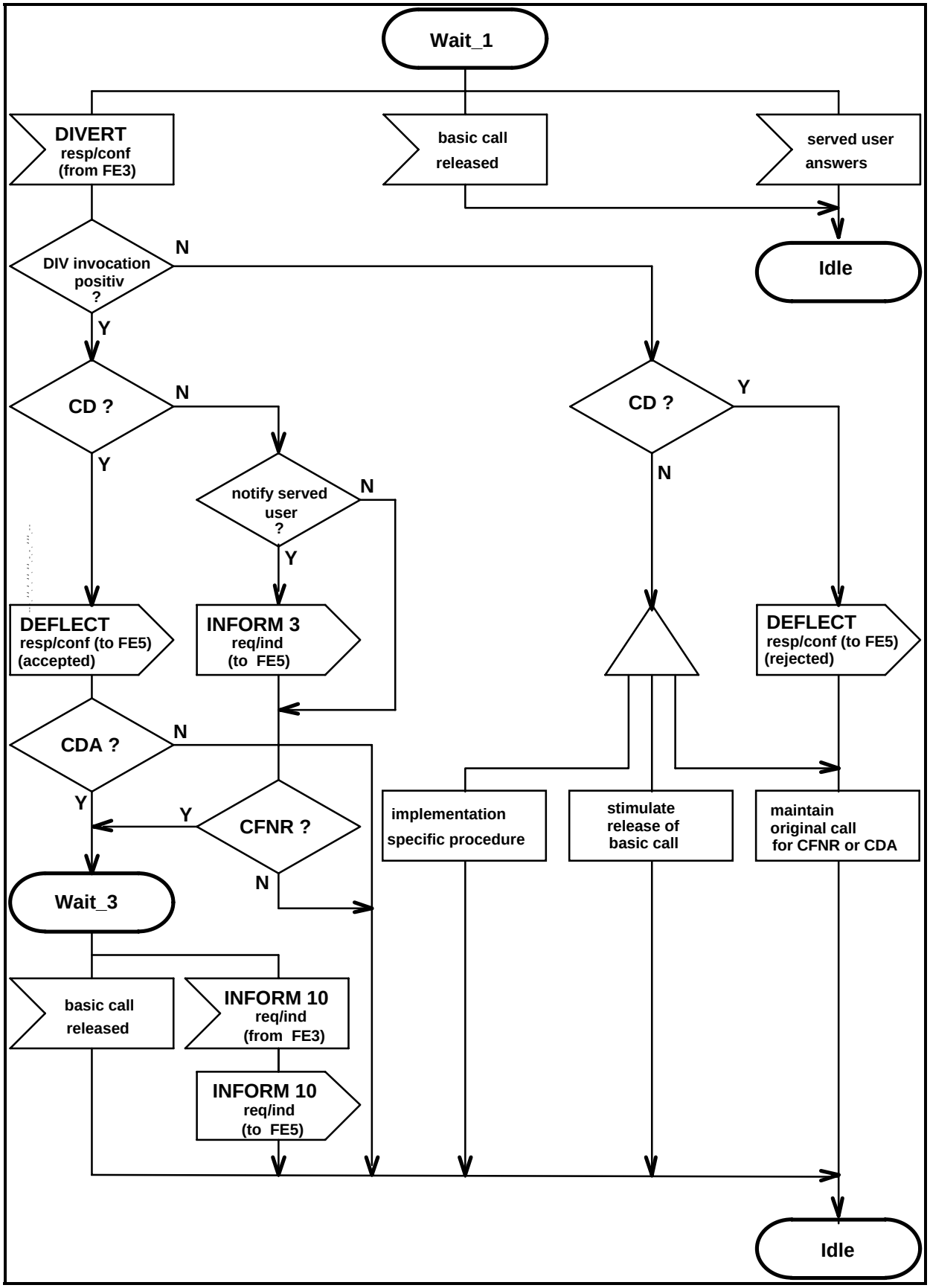

Figure 29 - SDL for Functional Entity FE4 (part 2)

© ISO/IEC 2003 – All rights reserved
Copyright International Organization for Standardization
Provided by IHS under license with ISO
No reproduction or networking permitted without license from IHS
Not for Resale

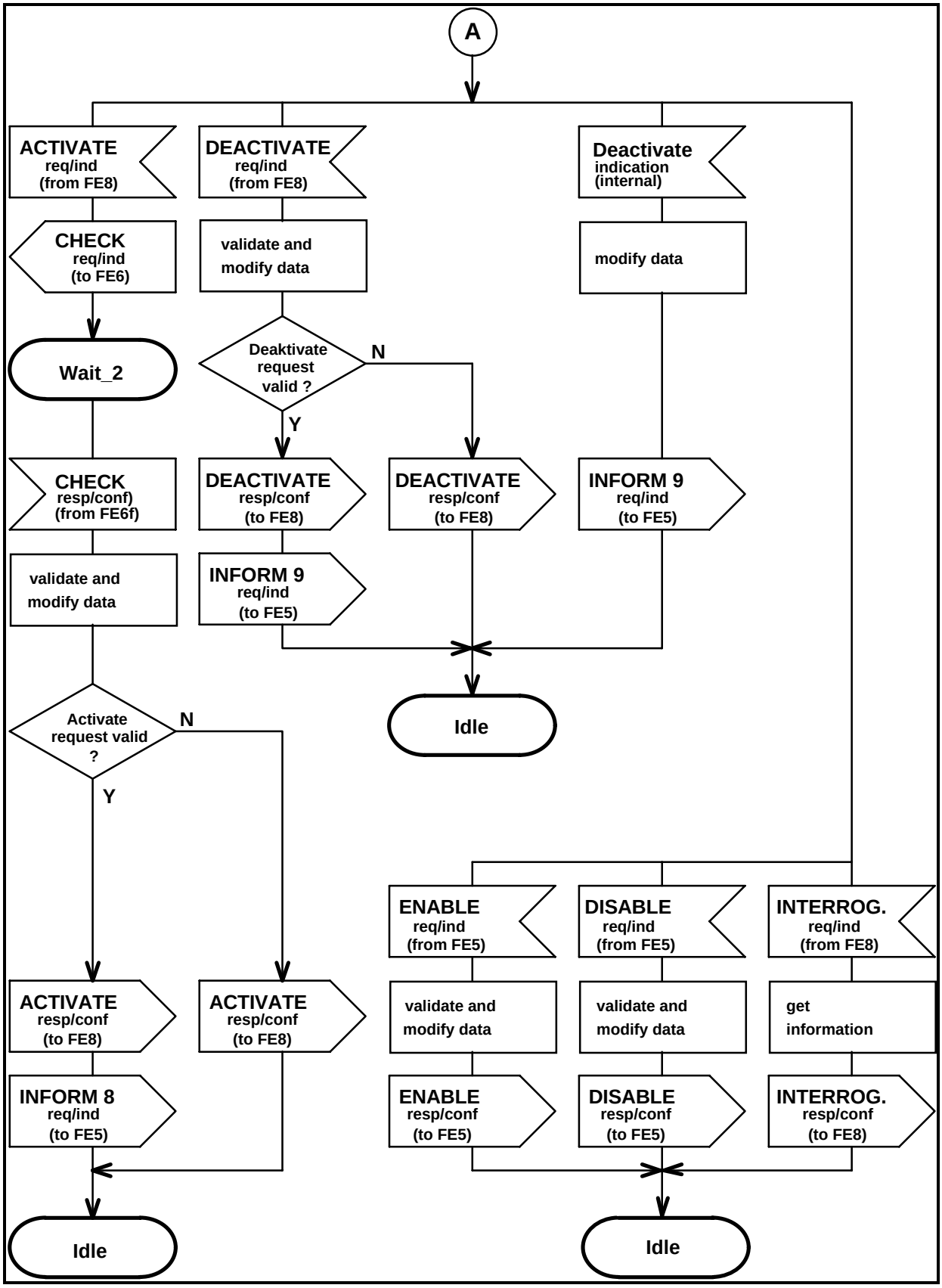

Figure 30 - SDL for Functional Entity FE4 (part 3)

© ISO/IEC 2003 – All rights reserved
Copyright International Organization for Standardization
Provided by IHS under license with ISO
No reproduction or networking permitted without license from IHS
Not for Resale

10.4.5 Behaviour of FE5

Figure 31 contains the SDL diagram for the functional entity FE5.

- Input signals from the left represent information flows from FE4.
- Input signals from the right represent primitives from the user.
- Output signals to the left represent information flows to FE4.
- Output signals to the right represent primitives to the user.

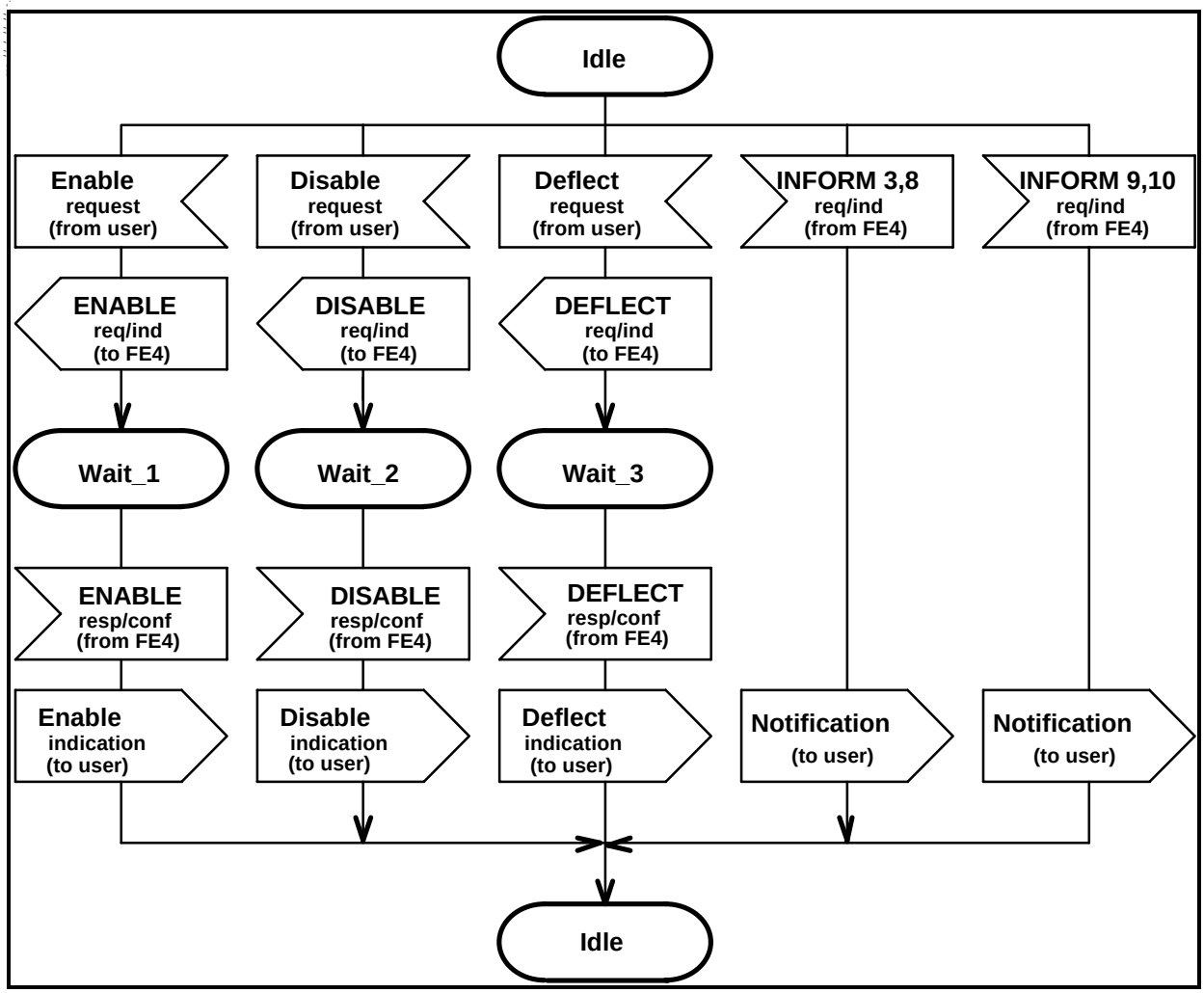

Figure 31 - SDL for Functional Entity FE5

© ISO/IEC 2003 – All rights reserved
Copyright International Organization for Standardization
Provided by IHS under license with ISO
No reproduction or networking permitted without license from IHS
Not for Resale

10.4.6 Behaviour of FE6

Figure 32 contains the SDL diagram for the functional entity FE6.

- Input signals from the left represent information flows from FE3 or FE4.
- Input signals from the right represent primitives from local CC.
- Output signals to the right and to the left represent information flows to other functional entities.

The relationship to the basic call process is also indicated in task symbols or in the annotations.

© ISO/IEC 2003 – All rights reserved

Copyright International Organization for Standardization
Provided by IHS under license with ISO
No reproduction or networking permitted without license from IHS
Not for Resale

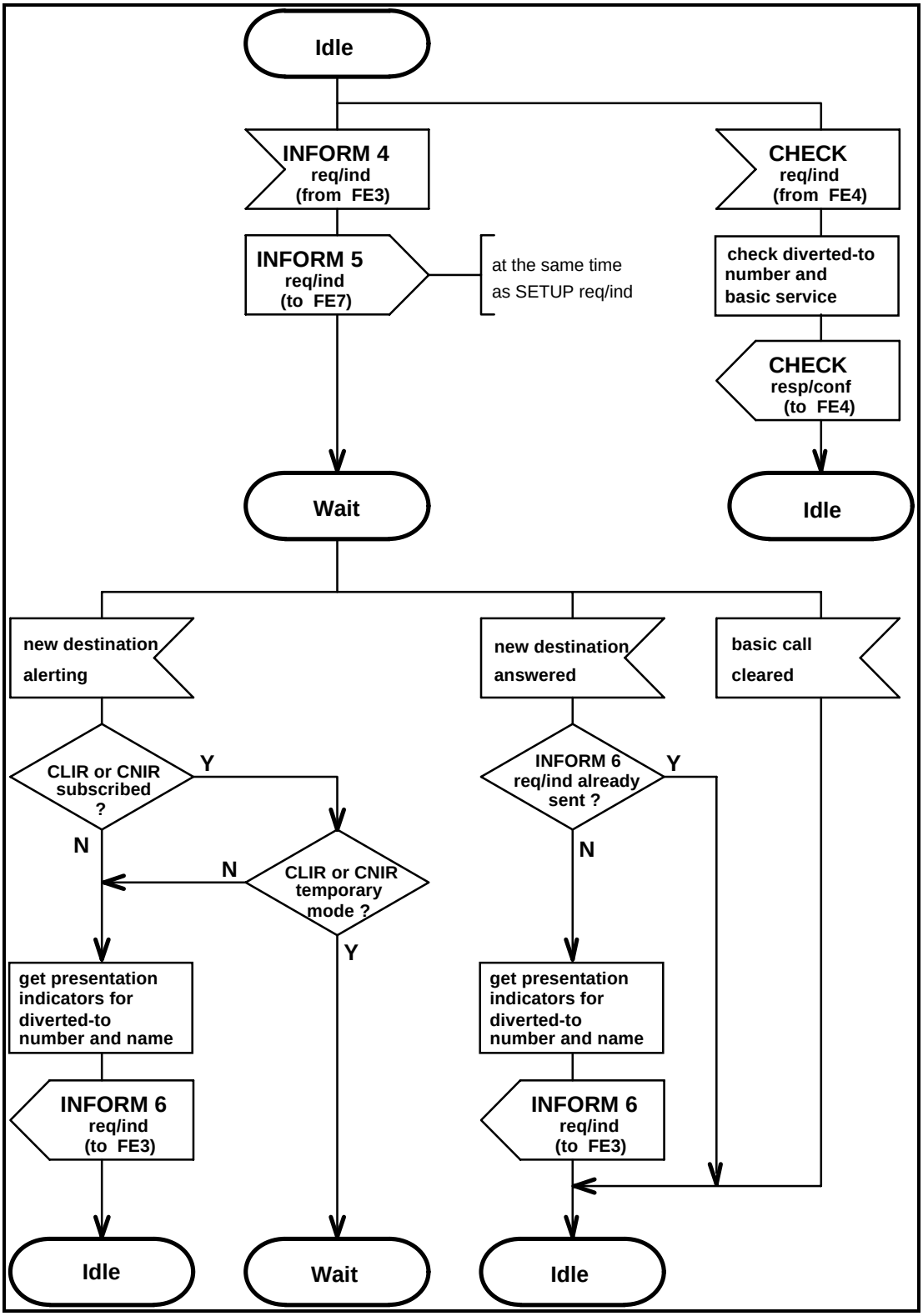

Figure 32 - SDL for Functional Entity FE6

© ISO/IEC 2003 – All rights reserved
Copyright International Organization for Standardization
Provided by IHS under license with ISO
No reproduction or networking permitted without license from IHS
Not for Resale

10.4.7 Behaviour of FE7

Figure 33 contains the SDL diagram for the functional entity FE7.

- Input signals from the left represent information flows from FE6.
- Output signals to the right represent primitives to the user.

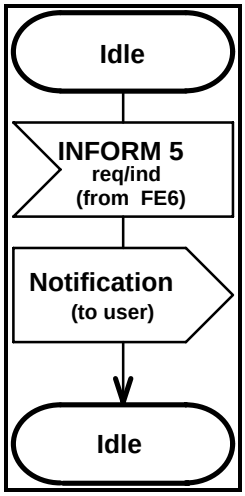

Figure 33 - SDL for Functional Entity FE7

© ISO/IEC 2003 – All rights reserved

Copyright International Organization for Standardization
Provided by IHS under license with ISO
No reproduction or networking permitted without license from IHS
Not for Resale

10.4.8 Behaviour of FE8

Figure 34 contains the SDL diagram for the functional entity FE8.

- Input signals from the left represent information flows from FE4.
- Input signals from the right represent information flows from FE9.
- Output signals to the right represent information flows to FE9.
- Output signals to the left represent information flows to FE4.

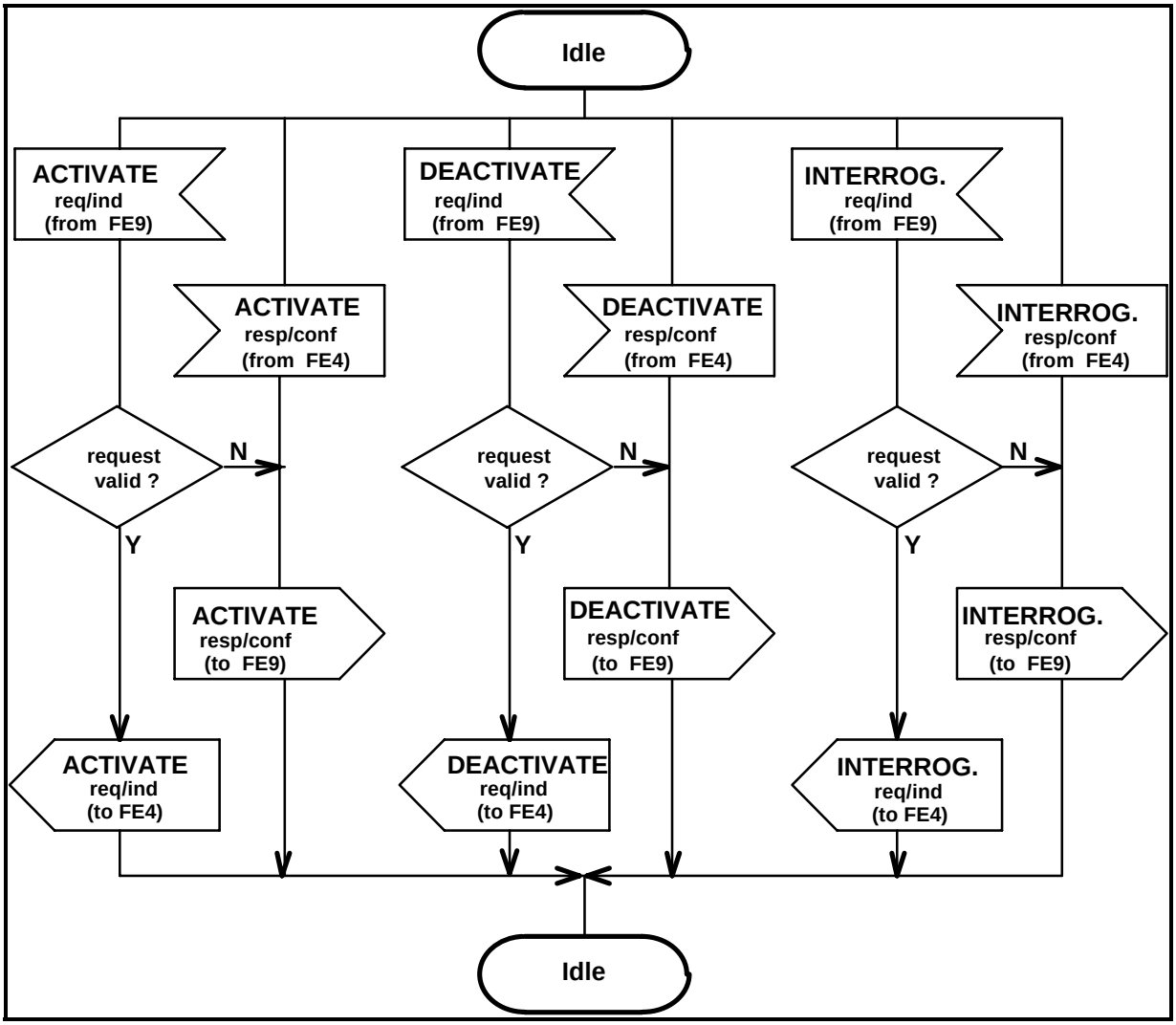

Figure 34 - SDL for Functional Entity FE8

© ISO/IEC 2003 – All rights reserved
Copyright International Organization for Standardization
Provided by IHS under license with ISO
No reproduction or networking permitted without license from IHS
Not for Resale

10.4.9 Behaviour of FE9

Figure 35 contains the SDL diagram for the functional entity FE8.

- Input signals from the left represent information flows from FE8.
- Input signals from the right represent primitives from the user.
- Output signals to the left represent information flows to FE8.
- Output signals to the right represent primitives to the user.

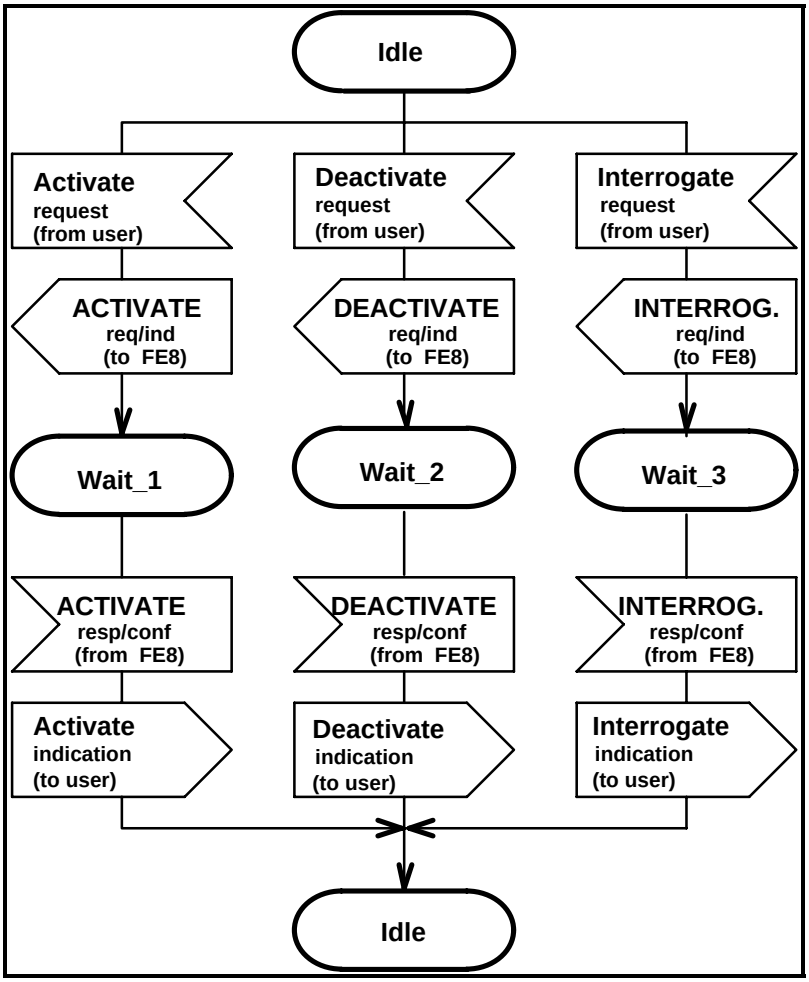

Figure 35 - SDL for Functional Entity FE9

--`,,,`-`-`,,`,,`,`,,`---
© ISO/IEC 2003 – All rights reserved

Copyright International Organization for Standardization
Provided by IHS under license with ISO
No reproduction or networking permitted without license from IHS
Not for Resale

10.5 Allocation of functional entities to physical equipment

The allocation of FEs to physical locations as shown in tables 20, 21 and 22 shall apply. In these tables, "TE" indicates a TE attached to a PISN. Where a terminal involved is stimulus with respect to call diversion, any FE shown as residing in the corresponding user's TE, shall reside instead in that user's PINX.

Table 20 - Allocation for call diversion operation by "forward switching" and "partial rerouteing"

	User A FE1	**User A FE2**	**FE3**	**User B FE4**	**User B FE5**	**User C FE6**	**User C FE7**
Scenario 1	TE	PINX	User B PINX	PINX	TE	PINX	TE
Scenario 2	TE	other network	other network	other network	other network	other network	other network
Scenario 3	other network	other network	User B PINX	PINX	TE	other network	other network
Scenario 4	other network	other network	other network	other network	other network	PINX	TE
Scenario 5	TE	other network	other network	other network	other network	PINX	TE
Scenario 6	TE	PINX	User B PINX	PINX	TE	other network	other network
Scenario 7	other network	other network	User B PINX	PINX	TE	PINX	TE
Scenario 8	other network	other network	other network	other network	TE	other network	other network
Scenario 9	other network	other network	other network	other network	TE	PINX	TE
Scenario 10	TE	other network	other network	other network	TE	other network	other network
Scenario 11	TE	other network	other network	other network	TE	PINX	TE
Scenario 12	other network	other network	other network	PINX	TE	other network	other network
Scenario 13	TE	other network	other network	PINX	TE	other network	other network
Scenario 14	other network	other network	other network	PINX	TE	PINX	TE
Scenario 15	TE	other network	other network	PINX	TE	PINX	TE

© ISO/IEC 2003 – All rights reserved
Copyright International Organization for Standardization
Provided by IHS under license with ISO
No reproduction or networking permitted without license from IHS
Not for Resale

Table 21 - Allocation for call diversion operation by "rerouteing"

	User A FE1	User A FE2	FE3	User B FE4	User B FE5	User C FE6	User C FE7
Scenario 16	TE	PINX	Originat. PINX	PINX	TE	PINX	TE
Scenario 17	TE	PINX	Originat. PINX	PINX	TE	other network	other network
Scenario 18	other network	other network	Gateway PINX	PINX	TE	PINX	TE
Scenario 19	other network	other network	Gateway PINX	PINX	TE	other network	other network

Table 22 - Allocation for call forwarding activation/deactivation and interrogation

		Served User B FE4	Served User B FE5	De/activating User Interrogating User FE8	De/activating User Interrogating User FE9
Scenario 20		PINX	TE	User B PINX	TE
Scenario 21		PINX	TE	any PINX	TE
Scenario 22		other network	TE	other network	TE

10.6 Interworking considerations

In cases where FE2, FE3 or FE6 is in another network, information pertaining to relationship rb, rc or re shall be passed as appropriate to the other network by the Gateway PINX, except any restricted number or name information. In cases where FE4 is in another network, information pertaining to relationship rh shall be passed to the other network by the Gateway PINX, if the other network supports the equivalent information flow.

In cases where information is received from a FE located in another network by a Gateway PINX, the information required for SS-CFU, SS-CFB, SS-CFNR and SS-CD shall be used by that PINX.

© ISO/IEC 2003 – All rights reserved
Copyright International Organization for Standardization
Provided by IHS under license with ISO
No reproduction or networking permitted without license from IHS
Not for Resale

Annex A
(informative)

Bibliography

ITU-T Rec. I.252.2 Integrated Services Digital Network (ISDN), Call Forwarding Busy (CFB) supplementary service, service description (1992)

ITU-T Rec. I.252.3 Integrated Services Digital Network (ISDN), Call Forwarding No Reply (CFNR) supplementary service, service description (1992)

ITU-T Rec. I.252.4 Integrated Services Digital Network (ISDN), Call Forwarding Unconditional (CFU) supplementary service, service description (1992)

ITU-T Rec. I.252.5 Integrated Services Digital Network (ISDN), Call Deflection (CD) supplementary service, service description (1992)

© ISO/IEC 2003 – All rights reserved
Copyright International Organization for Standardization
Provided by IHS under license with ISO
No reproduction or networking permitted without license from IHS
Not for Resale

Copyright International Organization for Standardization
Provided by IHS under license with ISO
No reproduction or networking permitted without license from IHS
Not for Resale

ICS 33.040.35

Price based on 72 pages

© ISO/IEC 2003 – All rights reserved
Copyright International Organization for Standardization
Provided by IHS under license with ISO
No reproduction or networking permitted without license from IHS
Not for Resale