INTERNATIONAL STANDARD

ISO/IEC 13864

First edition
1995-11-15

Information technology — Telecommunications and information exchange between systems — Private Integrated Services Network — Specification, functional model and information flows — Name identification supplementary services

Technologies de l'information — Télécommunications et échange d'information entre systèmes — Réseau privé à intégration de services — Spécification, modèle fonctionnel et flux d'informations — Services supplémentaires d'identification de nom



Reference number
ISO/IEC 13864:1995(E)

Copyright International Organization for Standardization
Provided by IHS under license with ISO
No reproduction or networking permitted without license from IHS

Not for Resale

Contents

1 Scope 1

2 Conformance 1

3 Normative references 1

4 Definitions 2

4.1 External Definitions 2

4.2 Other definitions 3

5 List of acronyms 3

6 SS-CNIP Stage 1 Description 4

6.1 Description 4

6.1.1 General Description 4

6.1.2 Qualifications on Applicability to Telecommunication Services 4

6.2 Procedures 4

6.2.1 Provision/Withdrawal 4

6.2.2 Normal Procedures 4

6.2.2.1 Activation/Deactivation/Registration/Interrogation 4

6.2.2.2 Invocation and Operation 4

6.2.3 Exceptional Procedures 4

6.2.3.1 Invocation and Operation 4

6.3 Interactions with other Supplementary Services and ANFs 4

6.3.1 Connected Name Identification Presentation (CONP) 5

6.3.2 Calling/Connected Name Identification Restriction (CNIR) 5

6.3.3 Calling Line Identification Presentation (CLIP) 5

6.3.4 Connected Line Identification Presentation (COLP) 5

6.3.5 Calling/Connected Line Identification Restriction (CLIR) 5

6.3.6 Call Forwarding Unconditional (CFU) 5

© ISO/IEC 1995
All rights reserved. Unless otherwise specified, no part of this publication may be reproduced or utilized in any form or by any means, electronic or mechanical, including photocopying and microfilm, without permission in writing from the publisher.

ISO/IEC Copyright Office • Case postale 56 • CH-1211 Genève 20 • Switzerland

Printed in Switzerland

Copyright International Organization for Standardization
Provided by IHS under license with ISO
No reproduction or networking permitted without license from IHS Not for Resale

6.3.7 Call Forwarding Busy (CFB) 5
6.3.8 Call Forwarding No Reply (CFNR) 5
6.3.9 Call Deflection (CD) 5
6.3.10 Call Transfer (CT) 5
6.3.11 Completion of Calls to Busy Subscriber (CCBS) 5
6.3.12 Completion of Calls on No Reply (CCNR) 5
6.3.13 Path Replacement (SS-PR) 5
6.4 Interworking Considerations 6
6.4.1 Incoming Calls 6
6.4.2 Outgoing Calls 6
6.5 Overall SDL 6

7 SS-CONP Stage 1 Description 8
7.1 Description 8
7.1.1 General Description 8
7.1.2 Qualifications on Applicability to Telecommunication Services 8
7.2 Procedures 8
7.2.1 Provision/Withdrawal 8
7.2.2 Normal Procedures 8
7.2.2.1 Activation/Deactivation/Registration/Interrogation 8
7.2.2.2 Invocation and Operation 8
7.2.3 Exceptional Procedures 9
7.2.3.1 Invocation and Operation 9
7.3 Interactions with other Supplementary Services and ANFs 9
7.3.1 Calling Name Identification Presentation (CNIP) 9
7.3.2 Calling/Connected Name Identification Restriction (CNIR) 9
7.3.3 Calling Line Identification Presentation (CLIP) 9
7.3.4 Connected Line Identification Presentation (COLP) 9
7.3.5 Calling/Connected Line Identification Restriction (CLIR) 9
7.3.6 Call Forwarding Unconditional (CFU) 9
7.3.7 Call Forwarding Busy (CFB) 9
7.3.8 Call Forwarding No Reply (CFNR) 9
7.3.9 Call Deflection (CD) 9
7.3.10 Call Transfer (CT) 9
7.3.11 Completion of Calls to Busy Subscribers (CCBS) 10
7.3.12 Completion of Calls on No Reply (CCNR) 10
7.3.13 Path Replacement (PR) 10
7.4 Interworking Considerations 10
7.4.1 Outgoing Calls 10
7.4.2 Incoming Calls 10
7.5 Overall SDL 10

8 SS-CNIR Stage 1 Description 12
8.1 Description 12
8.1.1 General Description 12
8.1.2 Qualifications on applicability to Telecommunication Services 12
8.2 Procedures 12
8.2.1 Provision/Withdrawal 12
8.2.2 Normal Procedures 12
8.2.2.1 Activation/Deactivation/Registration/Interrogation 12
8.2.2.2 Invocation and Operation 12
8.2.3 Exceptional Procedures 13
8.2.3.1 Invocation and Operation 13

Copyright International Organization for Standardization
Provided by IHS under license with ISO
No reproduction or networking permitted without license from IHS
Not for Resale

8.3 Interactions with other Supplementary Services and ANFs 13
8.3.1 Calling Name Identification Presentation (CNIP) 13
8.3.2 Connected Name Identification Presentation (CONP) 13
8.3.3 Calling Line Identification Presentation (CLIP) 13
8.3.4 Connected Line Identification Presentation (COLP) 13
8.3.5 Calling/Connected Line Identification Restriction (CLIR) 13
8.3.6 Call Forwarding Unconditional (CFU) 13
8.3.7 Call Forwarding Busy (CFB) 13
8.3.8 Call Forwarding No Reply (CFNR) 13
8.3.9 Call Deflection (CD) 13
8.3.10 Call Transfer (CT) 13
8.3.11 Completion of Calls to Busy Subscribers (CCBS) 13
8.3.12 Completion of Calls on No Reply (CCNR) 13
8.3.13 Path Replacement (PR) 13
8.4 Interworking Considerations 14
8.4.1 Incoming Calls 14
8.4.2 Outgoing Calls 14
8.5 Overall SDL 14

9 SS-CNIP Stage 2 Description 16
9.1 Functional Model 16
9.1.1 Functional Model Description 16
9.1.2 Description of the Functional Entities 16
9.1.3 Relationship of the Functional Model to the Basic Call Functional Model 16
9.2 Information Flows 16
9.2.1 Definition of Information Flows 16
9.2.1.1 INFORM 1 17
9.2.1.2 INFORM 2 17
9.2.2 Relationship of Information Flows to Basic Call Information Flow 17
9.2.3 Information Flow Sequences 18
9.3 The Functional Entity Actions 18
9.4 Functional Entity Behaviour 19
9.5 Allocation of Functional Entities to Physical Locations 21

10 SS-CONP Stage 2 Description 22
10.1 Functional Model 22
10.1.1 Functional Model Description 22
10.1.2 Description of the Functional Entities 22
10.1.3 Relationship of the Functional Model to the Basic Call Functional Model 22
10.2 Information Flows 23
10.2.1 Definition of Information Flows 23
10.2.1.1 INFORM 3 23
10.2.1.2 INFORM 4 23
10.2.1.3 INFORM 5 24
10.2.1.4 INFORM 6 24
10.2.1.5 INFORM 7 25
10.2.1.6 INFORM 8 25
10.2.2 Relationship of Information Flows to Basic Call Information Flow 25
10.2.3 Information Flow Sequences 26
10.3 Functional Entity Actions 27
10.4 Functional Entity Behaviour 28

Copyright International Organization for Standardization
Provided by IHS under license with ISO
No reproduction or networking permitted without license from IHS Not for Resale

10.5 Allocation of Functional Entities to Physical Locations 30

11 SS-CNIR Stage 2 Description 31

11.1 Functional Model 31

11.1.1 Functional Model Description 31

11.1.2 Description of the Functional Entities 31

11.1.3 Relationship of the Functional Model to the Basic Call Functional Model 31

11.2 Information Flows 32

11.2.1 Definition of Information Flows 32

11.2.2 Relationship of the Functional Model to the Basic Call Functional Model 32

11.2.2 Relationship of Information Flows to Basic Call Information Flows 32

11.2.3 Information Flow Sequences 32

11.3 Functional Entity Actions 33

11.4 Functional Entity Behaviour 33

11.5 Allocation of Functional Entities to Physical Locations 36

Annex A: Structure and Content of a PISN Name 37

--`,,```,,,,````-`-`,,`,,`,`,,`---

Copyright International Organization for Standardization
Provided by IHS under license with ISO
No reproduction or networking permitted without license from IHS

Not for Resale

Foreword

ISO (the International Organization for Standardization) and IEC (the International Electrotechnical Commission) form the specialized system for worldwide standardization. National bodies that are members of ISO or IEC participate in the development of International Standards through technical committees established by the respective organization to deal with particular fields of technical activity. ISO and IEC technical committees collaborate in fields of mutual interest. Other international organizations, governmental and non-governmental, in liaison with ISO and IEC, also take part in the work.

In the field of information technology, ISO and IEC have established a joint technical committee, ISO/IEC JTC1. Draft International Standards adopted by the joint technical committee are circulated to the national bodies for voting. Publication as an International Standard requires approval by at least 75% of the national bodies casting a vote.

International Standard ISO/IEC 13864 was prepared by Joint Committee ISO/IEC JTC1, *Information Technology*, Subcommittee SC6, *Telecommunications and information exchange between systems*.

Annex A forms an integral part of this International Standard.

Copyright International Organization for Standardization
Provided by IHS under license with ISO
No reproduction or networking permitted without license from IHS
Not for Resale

Introduction

This International Standard is one of a series of ISO International Standards defining services and signalling protocols applicable to Private Integrated Services Networks. The series uses the ISDN concepts as developed by ITU-T and conforms to the framework of standards for Open Systems Interconnection as defined by ISO/IEC.

This particular International Standard specifies the Name Identification Supplementary Services.

--`,,```,,,,````-`-`,,`,,`,`,,`---

Copyright International Organization for Standardization
Provided by IHS under license with ISO
No reproduction or networking permitted without license from IHS

Not for Resale

Information technology — Telecommunications and information exchange between systems — Private Integrated Services Network — Specification, functional model and information flows — Name identification supplementary services

This International Standard specifies the supplementary services Calling Name Identification Presentation (SS-CNIP), Connected Name Identification Presentation (SS-CONP) and Calling/Connected Name Identification Restriction (SS-CNIR), which are applicable to various basic services supported by Private Integrated Services Networks (PISNs). Basic services are specified in ISO/IEC 11574.

Calling Name Identification Presentation (CNIP) is a supplementary service which is offered to the called user and which provides the name of the calling user (calling party name) to the called user.

Connected Name Identification Presentation (CONP) is a supplementary service which is offered to the calling user and which provides to the calling user the following:

- the name of the user who answers the call (connected party name);
- optionally the name of the alerting user (called party name);
- optionally the name of the called user who cannot be reached (busy party name).

Calling/Connected Name Identification Restriction (CNIR) is a supplementary service which is offered to a user to restrict presentation of that user's name to another user.

Service specifications are produced in three stages, according to the method described in CCITT Recommendations I.130.

This International Standard contains the stage 1 and 2 specifications of the Name Identification supplementary services. The stage 1 specifications (clauses 6,7 and 8) specify the supplementary services as seen by users of PISNs. The stage 2 specifications (clauses 9,10 and 11) identify the functional entities involved in the supplementary services and the information flows between them.

2 Conformance

In order to conform to this International Standard, a Stage 3 standard shall specify signalling protocols and equipment behaviour that are capable of being used in a PISN which supports the supplementary services specified in this International Standard. This means that, to claim conformance, a Stage 3 standard is required to be adequate for the support of those aspects of clauses 6, 7 and 8 (stage 1) and clauses 9,10 and 11 (stage 2) which are relevant to the interface or equipment to which the Stage 3 Standard applies.

3 Normative References

The following standards contain provisions which, through reference in this text, constitute provisions of this International Standard. At the time of publication, the editions indicated were valid. All standards are subject to revision, and parties to agreements based on this International Standard are encouraged to investigate the possibility of applying the most recent editions of the standards indicated below. Members of IEC and ISO maintain registers of currently valid International Standards.

ISO/IEC 11574:1994, *Information technology — Telecommunications and information exchange between systems — Private Integrated Services Network — Circuit-mode 64 kbit/s bearer services — Service description, functional capabilities and information flows.*

Copyright International Organization for Standardization
Provided by IHS under license with ISO
No reproduction or networking permitted without license from IHS
Not for Resale

ISO/IEC 11579-1:1994, *Information technology — Telecommunications and information exchange between systems — Private Integrated Services Network — Part 1: Reference configuration for PISN exchanges (PINX).*

ISO/IEC 13872:1995, *Information technology — Telecommunications and information exchange between systems — Private Integrated Services Network — Specification, functional model and information flows — Call diversion supplementary services.*

ISO 8859-1:1987, *Information processing — 8-bit single-byte coded graphic character sets — Part 1: Latin alphabet No. 1.*

CCITT Rec. I.112, *Vocabulary of terms for ISDN (Blue Book).*

CCITT Rec. I.130, *Method for the characterization of telecommunication services supported by an ISDN and network capabilities of an ISDN (Blue Book).*

CCITT Rec. I.210, *Principles of telecommunication services supported by an ISDN and the means to describe them (Blue Book).*

CCITT Rec. Z.100, *Specification and Description Language (Blue Book).*

CCITT Rec. T.61, *Character repertoire and coded character sets for the international teletex service (Blue Book).*

4 Definitions

For the purposes of this International Standard, the following definitions apply.

4.1 External Definitions

This International Standard uses the following terms defined in other documents:

- Basic Service (CCITT Rec. I.210)
- Private Integrated Services Network (PISN) (ISO/IEC 11579-1)
- Private Integrated Services Network Exchange (PINX) (ISO/IEC 11579-1)
- Service (CCITT Rec. I.112)
- Signalling (CCITT Rec. I.112)
- Supplementary Service (CCITT Rec. I.210)
- User (ISO/IEC 11574)

This International Standard refers to the following basic call functional entities defined in ISO/IEC 11574:

- Call Control (CC)
- Call Control Agent (CCA)

This International Standard refers to the following basic call information flows defined in ISO/IEC 11574:

- r1
- r2
- r3

This International Standard refers to the following basic call information flows defined in ISO/IEC 11574:

- DISCONNECT request/indication
- REPORT request/indication
- RELEASE request/indication
- SETUP request/indication
- SETUP response/confirmation
- SETUP REJECT request/indication

Copyright International Organization for Standardization
Provided by IHS under license with ISO
No reproduction or networking permitted without license from IHS Not for Resale

4.2 Other definitions

4.2.1 additional network feature: A capability, over and above that of a basic service, provided by a PISN user.

4.2.2 application identifier: Manufacturer specific information which can imply the structure of the name information.

4.2.3 busy: An ISDN destination is considered to be busy if either a "network determined user busy" or a "user determined user busy" condition occurs.

4.2.4 busy party name: The name of the called user who cannot be reached because of a busy condition.

4.2.5 call, basic call: An instance of the use of a basic service.

4.2.6 calling party name: The name of the calling user.

4.2.7 connected party name: The name of the user who answers the call.

4.2.8 called party name: The name of the alerting user.

4.2.9 name: A string of maximum 50 characters which is used for the name identification of the PISN user of a call.

NOTE - The structure and content of a name are defined in annex A.

4.2.10 terminal, terminal equipment: An item of equipment attached to a PISN to provide access for a user to one or more services.

5 List of acronyms

CC	Call Control (functional entity)
CCA	Call Control Agent (functional entity)
CONP	Connected Name Identification Presentation
CNIP	Calling Name Identification Presentation
CNIR	Calling/Connected Name Identification Restriction
FE	Functional Entity
ISDN	Integrated Services Digital Network
PISN	Private Integrated Services Network
PINX	Private Integrated Services Network Exchange
SDL	Specification and Description Language
SS-CONP	Connected Name Identification Presentation supplementary service
SS-CNIP	Calling Name Identification Presentation supplementary service
SS-CNIR	Calling/Connected Name Identification Restriction supplementary service
TE	Terminal Equipment

Copyright International Organization for Standardization
Provided by IHS under license with ISO
No reproduction or networking permitted without license from IHS
Not for Resale

6 SS-CNIP Stage 1 Description

6.1 Description

6.1.1 General Description

Calling Name Identification Presentation (SS-CNIP) is a supplementary service which is offered to the called user and which provides the name of the calling user (calling party name) to the called user.

The PISN provides the calling party name to the called user if available and allowed (according to the restrictions defined in 6.2.3.1) whenever an incoming call is presented.

The possible provision of the calling party name by the calling user to the PISN is outside the scope of this International Standard.

6.1.2 Qualifications on Applicability to Telecommunication Services

This supplementary service is applicable to all basic services defined in ISO/IEC 11574.

6.2 Procedures

6.2.1 Provision/Withdrawal

This supplementary service shall be generally available.

Some users may have a service profile which permits the override of calling name identification restriction.

6.2.2 Normal Procedures

6.2.2.1 Activation/Deactivation/Registration/Interrogation

SS-CNIP shall be permanently activated. No information needs to be registered with the PISN for this supplementary service and therefore interrogation is not applicable.

6.2.2.2 Invocation and Operation

The PISN shall provide the called user with the calling party name at the same time as indicating an incoming call.

The PISN may truncate the calling party name in accordance with what the user can receive.

The method by which the PISN obtains the name information is implementation dependent and outside the scope of this International Standard. The management of the PISN name directory system is also outside the scope of this International Standard.

In some cases where calling name identification restriction has been invoked, there may be certain categories of called user that have the service profile to override this restriction and have the calling party name presented, e.g. emergency stations, PISN operators. In these circumstances, presentation shall include an indication that restriction has been invoked.

6.2.3 Exceptional Procedures

6.2.3.1 Invocation and Operation

There are two exceptions when the calling party name shall not be presented to the called user:

- when the calling name identification restriction has been invoked (see definition of Calling/Connected Name Identification Restriction), and
- when the calling party name is not available, e.g. due to interworking with another network or when no name is registered against the calling PISN user.

In such cases the called user shall receive an indication of the situation.

6.3 Interactions with other Supplementary Services and ANFs

This clause specifies interactions with other supplementary services and ANFs for which PISN standards were available at the time of publication of this International Standard.

Copyright International Organization for Standardization
Provided by IHS under license with ISO
No reproduction or networking permitted without license from IHS Not for Resale

6.3.1 Connected Name Identification Presentation (CONP)

No interactions.

6.3.2 Calling/Connected Name Identification Restriction (CNIR)

The calling party name shall not be presented if calling name identification restriction has been invoked at the calling user, unless the called user has the service profile to override this restriction.

6.3.3 Calling Line Identification Presentation (CLIP)

No interactions.

6.3.4 Connected Line Identification Presentation (COLP)

No interactions.

6.3.5 Calling/Connected Line Identification Restriction (CLIR)

No interactions.

6.3.6 Call Forwarding Unconditional (CFU)

Interaction specified in ISO/IEC 13872 shall apply.

6.3.7 Call Forwarding Busy (CFB)

Interactions specified in ISO/IEC 13872 shall apply.

6.3.8 Call Forwarding No Reply (CFNR)

Interactions specified in ISO/IEC 13872 shall apply.

6.3.9 Call Deflection (CD)

Interactions specified in ISO/IEC 13872 shall apply.

6.3.10 Call Transfer (CT)

No interactions.

NOTE - When Call Transfer has been performed, the names of the connected users are provided to each other, unless restriction applies, as part of the Call Transfer supplementary service.

6.3.11 Completion of Calls to Busy Subscribers (CCBS)

No interactions.

NOTE - Unless restriction applies, SS-CNIP applies to the called user when the call is eventually offered to that user.

6.3.12 Completion of Calls on No Reply (CCNR)

No interactions.

NOTE - Unless restriction applies, SS-CNIP applies to the called user when the call is eventually offered to that user.

6.3.13 Path Replacement (ANF-PR)

No interactions.

Copyright International Organization for Standardization
Provided by IHS under license with ISO
No reproduction or networking permitted without license from IHS Not for Resale

6.4 Interworking Considerations

6.4.1 Incoming Calls

On calls incoming from another network, the calling party name shall be obtained from the other network if available. Where no name is provided by the other network, the called PISN user shall be given an indication "name unavailable" or "presentation restricted", as appropriate.

If the number of characters in the calling party name exceeds 50, the PISN shall truncate the excess characters.

6.4.2 Outgoing Calls

On outgoing calls to another network, the PISN shall provide the calling party name to the other network if this network supports an equivalent supplementary service and if the name is available and presentation not restricted.

If the number of characters in a name exceeds the maximum number of characters that can be transmitted to the other network, the trailing characters shall be truncated.

6.5 Overall SDL

Figure 1 contains the dynamic description of SS-CNIP using the SDL defined in CCITT Rec. Z.100. The SDL process represents the behaviour of the network in providing SS-CNIP. The relationship to the basic call process is indicated in the annotations.

Output signals to the right represent primitives to the called PISN user. Input signals from the left represent internal stimuli.

Copyright International Organization for Standardization
Provided by IHS under license with ISO
No reproduction or networking permitted without license from IHS Not for Resale

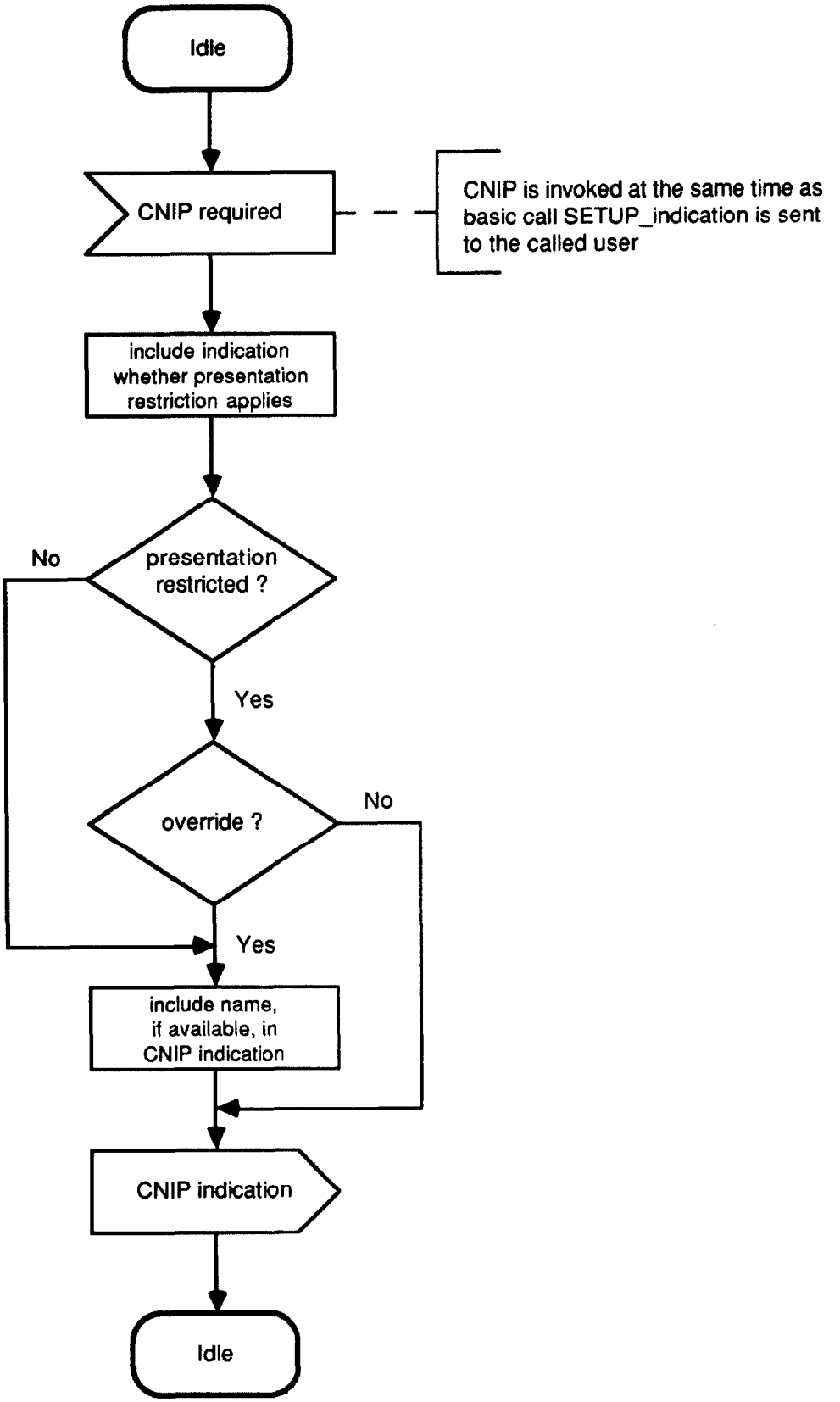

Figure 1 - SS-CNIP Overall SDL

Copyright International Organization for Standardization
Provided by IHS under license with ISO
No reproduction or networking permitted without license from IHS
Not for Resale

7 SS-CONP Stage 1 Description

7.1 Description

7.1.1 General Description

Connected Name Identification Presentation (SS-CONP) is a supplementary service which is offered to the calling user and which provides to the calling user the following:

- the name of the user who answers the call (connected party name),
- optionally the name of the alerting user (called party name),
- optionally the name of the called user who cannot be reached (busy party name).

The PISN provides the connected party name to the calling user when the called user connects to the incoming call. The PISN optionally provides the busy party name to the calling user when the called user is busy. The PISN optionally provides the called party name to the calling user when the called user is alerting.

NOTE - Interactions with certain supplementary services may cause the connected party name to differ from the called party name.

The possible provision of the connected party name by the connected user to the PISN is outside the scope of this International Standard.

7.1.2 Qualifications on Applicability to Telecommunication Services

This supplementary service is applicable to all basic services defined in ISO/IEC 11574.

7.2 Procedures

7.2.1 Provision/Withdrawal

This Supplementary service shall be generally available.

Some users may have a service profile which permits the override of connected/called/busy name identification restriction.

7.2.2 Normal Procedures

7.2.2.1 Activation/Deactivation/Registration/Interrogation

SS-CONP shall be permanently activated. No information needs to be registered with the PISN for this supplementary service and therefore interrogation is not applicable.

7.2.2.2 Invocation and Operation

The PISN shall provide the calling user with the connected party name at the same time as indicating that call establishment is complete. The PISN may provide the calling user with the busy party name at the same time as indicating that call establishment is unsuccessful. The PISN may provide the calling user with the called party name at the same time as indicating that the call is alerting.

The PISN may truncate the connected/called/busy party name in accordance with what the user can receive.

The method by which the PISN obtains the name information is implementation dependent and outside the scope of this International Standard. The management of the PISN name directory system is also outside the scope of this International Standard.

In some cases where Connected Name Identification Restriction has been invoked, there may be certain categories of calling user that have the service profile to override this restriction and have the connected/called/busy party name presented, e.g. emergency stations, PISN operators. In these circumstances, presentation shall include an indication that restriction has been invoked.

Copyright International Organization for Standardization
Provided by IHS under license with ISO
No reproduction or networking permitted without license from IHS Not for Resale

7.2.3 Exceptional Procedures

7.2.3.1 Invocation and Operation

There are two exceptions when the connected/called/busy party name shall not be presented to the calling user:

- when the connected/called/busy/ name identification restriction has been invoked (see definition of Calling/Connected Name Identification Restriction), and
- when the connected/called/busy party name is not available, e.g. due to interworking with another network or when no name is registered against the destination PISN user.

In such cases the calling user shall receive an indication of the situation.

7.3 Interactions with other Supplementary Services and ANFs

This clause specifies interactions with other supplementary services for which PISN Standards were available at the same time of publication of this International Standard.

7.3.1 Calling Name Identification Presentation (CNIP)

No interactions.

7.3.2 Calling/Connected Name Identification Restriction (CNIR)

The connected/called/busy party name shall not be presented if Connected Name Identification Restriction has been invoked at the destination user, unless the calling user has the service profile to override this restriction.

7.3.3 Calling Line Identification Presentation (CLIP)

No interactions

7.3.4 Connected Line Identification Presentation (COLP)

No interactions.

7.3.5 Calling/Connected Line Identification Restriction (CLIR)

No interactions.

7.3.6 Call Forwarding Unconditional (CFU)

Interactions specified in ISO/IEC 13872 shall apply.

7.3.7 Call Forwarding Busy (CFB)

Interactions specified in ISO/IEC 13872 shall apply.

7.3.8 Call Forwarding No Reply (CFNR)

Interactions specified in ISO/IEC 13872 shall apply.

7.3.9 Call Deflection (CD)

Interactions specified in ISO/IEC 13872 shall apply.

7.3.10 Call Transfer (CT)

No interactions.

NOTE - When Call Transfer has been performed, the names of the connected users (and optionally of the alerting user) are provided to each other, unless restriction applies, as part of the Call Transfer supplementary service.

Copyright International Organization for Standardization
Provided by IHS under license with ISO
No reproduction or networking permitted without license from IHS
Not for Resale

7.3.11 Completion of Calls to Busy Subscribers (CCBS)

No protocol interactions.

NOTE - Unless restriction applies, SS-CONP applies to the calling user when the call is established as a result of Completion of Calls to Busy Subscriber.

7.3.12 Completion of Calls on No Reply (CCNR)

No protocol interactions.

NOTE - Unless restriction applies, SS-CONP applies to the calling user when the call is established as a result of Completion of Calls on No Reply.

7.3.13 Path Replacement (PR)

No protocol interactions.

7.4 Interworking Considerations

7.4.1 Outgoing Calls

On calls outgoing to another network, the connected/called/busy party name shall be obtained from the other network if available. Where no name is provided by the other network, the calling PISN user shall be given an indication "name unavailable" or "presentation restricted", as appropriate.

If the number of characters in the connected/called/busy party name exceeds 50, the PISN shall truncate the excess characters.

7.4.2 Incoming Calls

On incoming calls from another network, the PISN shall provide the connected/called/busy party name to the other network if this network supports an equivalent supplementary service and if the name is available and presentation not restricted.

If the number of characters in a name exceeds the maximum number of characters that can be transmitted to the other network, the trailing characters shall be truncated.

7.5 Overall SDL

Figure 2 contains the dynamic description of SS-CONP using the SDL defined in CCITT Rec. Z.100. The SDL process represents the behaviour of the network in providing SS-CONP. The relationship to the basic call process is indicated in the annotations.

Output signals to the left represent primitives to the calling PISN user. Input signals from the right represent internal stimuli.

Copyright International Organization for Standardization
Provided by IHS under license with ISO
No reproduction or networking permitted without license from IHS Not for Resale

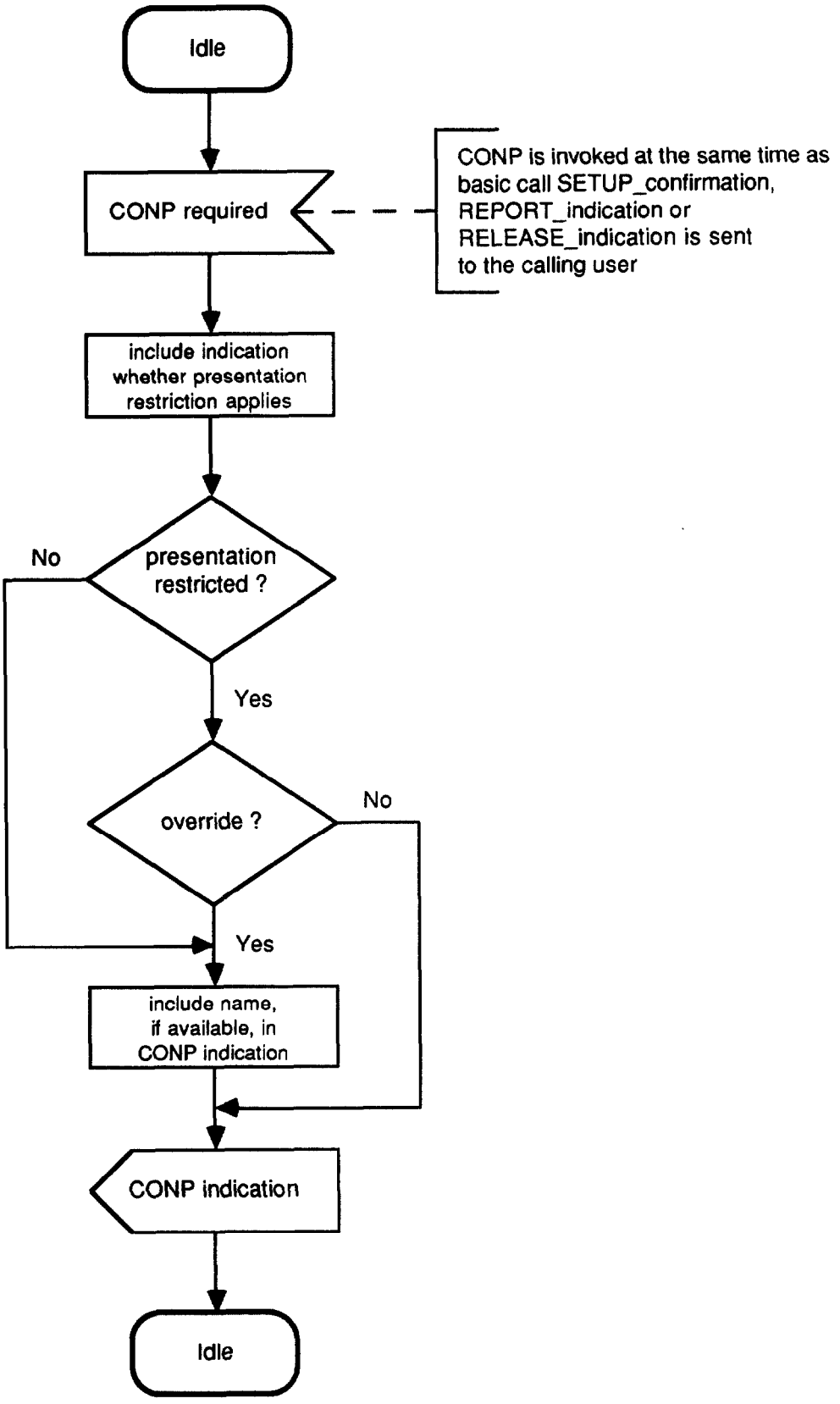

Figure 2 - SS-CONP Overall SDL

Copyright International Organization for Standardization
Provided by IHS under license with ISO
No reproduction or networking permitted without license from IHS
Not for Resale

8 SS-CNIR Stage 1 Description

8.1 Description

8.1.1 General Description

Calling/connected Name Identification Restriction (SS-CNIR) is a supplementary service which is offered to a user to restrict presentation of that user's name to another user.

When SS-CNIR applies to a user, the user's name is normally not presented to any other user.

8.1.2 Qualifications on applicability to Telecommunication Services

The supplementary service is applicable to all basic services defined in ISO/IEC 11574.

8.2 Procedures

8.2.1 Provision/Withdrawal

SS-CNIR shall be provided on a service profile basis. A PISN may provide one or more of several service options. The options shall apply separately to each name. The following service profile options are available.

- SS-CNIR mode:

  permanent (invoked for all calls)

  temporary (specified by user per call)

- Default for temporary mode:

  presentation restricted

  presentation not restricted

8.2.2 Normal Procedures

8.2.2.1 Activation/Deactivation/Registration/Interrogation

SS-CNIR shall be activated on provision and deactivated on withdrawal. This supplementary service requires no registration and admits no interrogation.

8.2.2.2 Invocation and Operation

If permanent mode is provided, then calling party name restriction shall be invoked automatically for all calls originating from the PISN user concerned, and connected/called/busy identification restriction shall be invoked automatically for all calls that terminate at the PISN user concerned.

If temporary mode is provided, the called party name and busy name shall not be presented. If temporary mode with default "presentation restricted" is provided, identification restriction of the calling party name and connected party name shall be invoked automatically for all calls originating or terminating at the PISN user concerned, unless requested otherwise by the PISN user at call establishment time. If temporary mode with default "presentation not restricted" is provided, identification restriction of the calling party name and connected party name shall not be invoked automatically for calls originating or terminating at the PISN user concerned, unless requested otherwise by the PISN user at call establishment time.

To override the default for an outgoing call when temporary mode is provided, the calling user makes a request for restriction or no restriction at the same time as requesting call establishment. To override the default for an incoming call when temporary mode is provided, the called user makes a request for restriction or no restriction at the same time as responding to the incoming call indication.

If identification restriction is invoked for an outgoing call, the calling party name shall be marked by the PISN as "presentation restricted". This prevents presentation to the called user (unless the called user has an override service profile).

Copyright International Organization for Standardization
Provided by IHS under license with ISO
No reproduction or networking permitted without license from IHS Not for Resale

If identification restriction is invoked for an incoming call, the connected/called/busy party name shall be marked by the PISN as "presentation restricted". This prevents presentation to the calling user (unless the calling user has an override service profile).

8.2.3 Exceptional Procedures

8.2.3.1 Invocation and Operation

A request from the PISN user for the override of a default shall be ignored if the PISN user is not provided with the temporary mode.

8.3 Interactions with other Supplementary Services and ANFs

This clause specifies interactions with other supplementary services for which PISN Standards were available at the time of publication of this International Standard.

8.3.1 Calling Name Identification Presentation (CNIP)

See SS-CNIP clause 6.3.2.

8.3.2 Connected Name Identification Presentation (CONP)

See SS-CONP clause 7.3.2

8.3.3 Calling Line Identification Presentation (CLIP)

No interactions.

8.3.4 Connected Line Identification Presentation (COLP)

No interactions.

8.3.5 Calling/Connected Line Identification Restriction (CLIR)

No interactions.

8.3.6 Call Forwarding Unconditional (CFU)

Interactions specified in ISO/IEC 13872 shall apply.

8.3.7 Call Forwarding Busy (CFB)

Interactions specified in ISO/IEC 13872 shall apply.

8.3.8 Call Forwarding No Reply (CFNR)

Interactions specified in ISO/IEC 13872 shall apply.

8.3.9 Call Deflection (CD)

Interactions specified in ISO/IEC 13872 shall apply.

8.3.10 Call Transfer (CT)

Interactions specified in ISO/IEC 13869 shall apply.

8.3.11 Completion of Calls to Busy Subscribers (CCBS)

No interactions.

8.3.12 Completion of Calls on No Reply (CCNR)

No interactions.

8.3.13 Path Replacement (PR)

No interactions.

Copyright International Organization for Standardization
Provided by IHS under license with ISO
No reproduction or networking permitted without license from IHS
Not for Resale

8.4 Interworking Considerations

8.4.1 Incoming Calls

This PISN supplementary service does not apply to the calling user of an incoming call. The other network may provide the equivalent service, in which case the PISN may receive an indication that presentation of the calling party name is restricted. In such a situation the other network may or may not supply the calling party name to the PISN. If not provided, even a called PISN user with an override service profile will be given only an indication that presentation is restricted.

If the called user has invoked name identification restriction, only the indication that presentation is restricted shall be passed on to the other network, and no connected/called/busy party name shall be passed.

8.4.2 Outgoing Calls

This PISN supplementary service does not apply to the connected user of an outgoing call. The other network may provide the equivalent service, in which case the PISN may receive an indication that presentation of the connected/called/busy party name is restricted. In such a situation the other network may or may not supply the connected/called/busy party name to the PISN. If not provided, even a calling PISN user with an override service profile will be given only an indication that presentation is restricted.

If the calling user has invoked Name Identification restriction, the calling party name shall be marked as "presentation restricted". Only this indication shall be passed on to the other network.

8.5 Overall SDL

Figure 3 contains the dynamic description of SS-CNIR using the SDL defined in CCITT Rec. Z.100. The SDL process represents the behaviour of the network in providing SS-CNIR. The relationship to the basic call process is indicated in the annotations.

Input signals from the left represent primitives from the served PISN user. Input signals from the right represent internal stimuli.

Copyright International Organization for Standardization
Provided by IHS under license with ISO
No reproduction or networking permitted without license from IHS Not for Resale

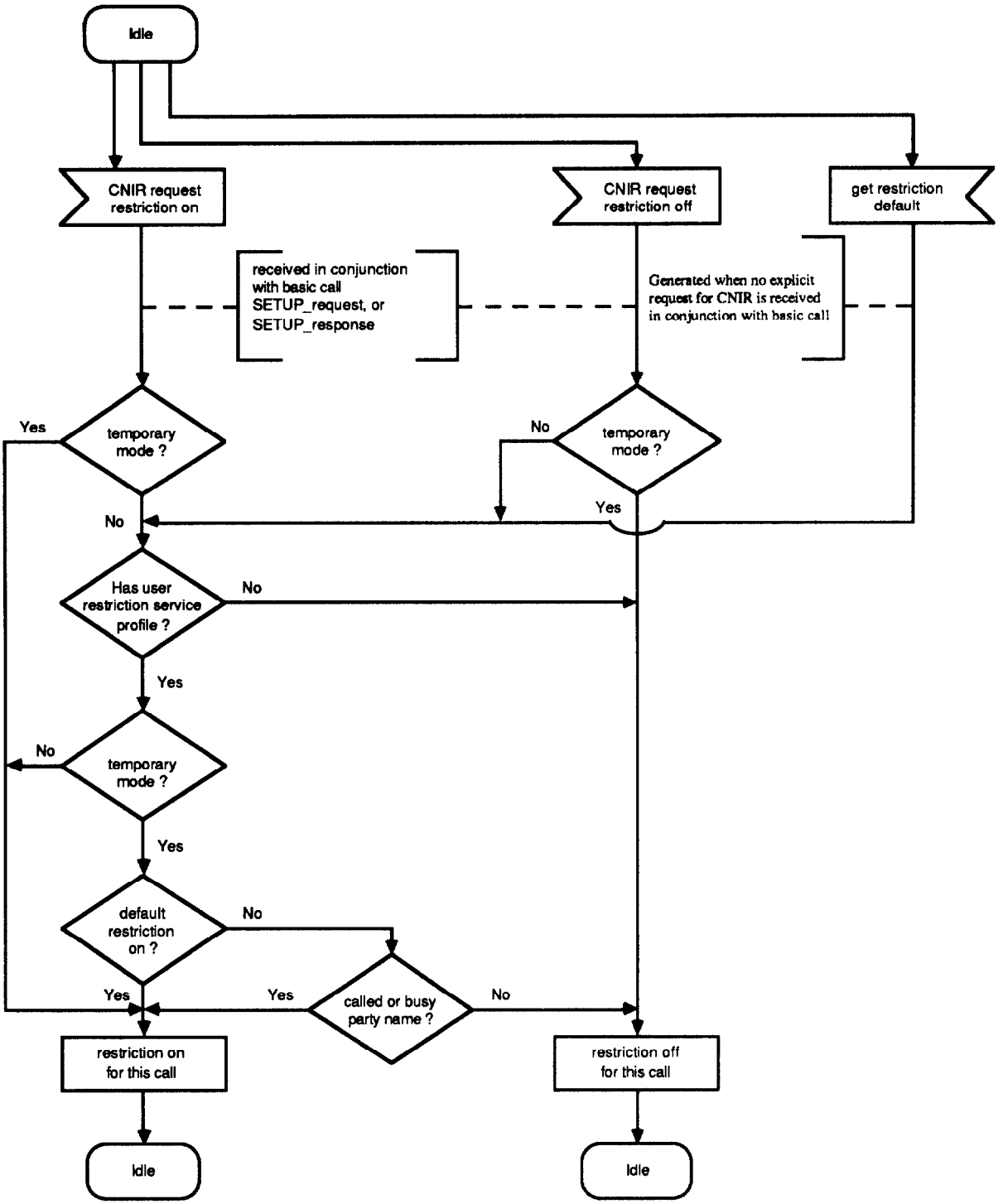

Figure 3 - SS-CNIR Overall SDL

Copyright International Organization for Standardization
Provided by IHS under license with ISO
No reproduction or networking permitted without license from IHS
Not for Resale

9 SS-CNIP Stage 2 Description

9.1 Functional Model

9.1.1 Functional Model Description

The functional model for SS-CNIP shall comprise the FEs "CNIP Provision" (FE1), "CNIP Presentation" (FE2) and "CNIP Reception" (FE3). A relationship ra shall exist between FE1 and FE2 and relationship rb shall exist between FE2 and FE3. Figure 4 shows these FEs and relationships.

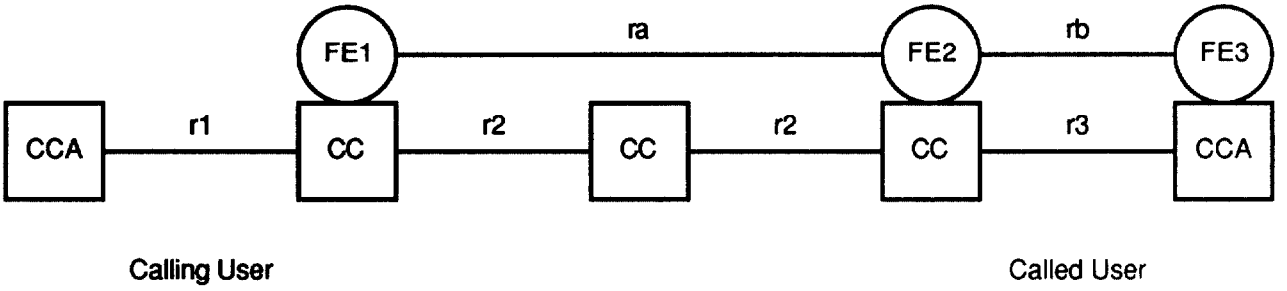

Figure 4 - Functional model and relationship to basic call for SS-CNIP

9.1.2 Description of the Functional Entities

The functional entities required by SS-CNIP shall be as follows:

- FE1 CNIP Provision: responsible for provision of the calling party name information and associated indicators to FE2.
- FE2 CNIP Presentation: responsible for reporting the calling party name information and associated indicators to FE3.
- FE3 CNIP Reception: responsible for delivery of the calling party name information and associated indicators to the PISN user.

NOTES

1 The structure of the name information is described in annex A of this International Standard.

2 The possibility, that the name information is stored in another FE (data base) and provided to FE1 on request for delivery to FE2 is outside the scope of this International Standard.

9.1.3 Relationship of the Functional Model to the Basic Call Functional Model

Figure 4 shows also the relationship with a basic service for SS-CNIP.

9.2 Information Flows

9.2.1 Definition of Information Flows

The information flows INFORM 1 and INFORM 2 shall apply for SS-CNIP.

In the tables below, the column headed "Request" indicates which of the service elements are mandatory (M) and which are optional (O) in an request/indication information flow. The column headed "Confirm" indicates which of the service elements are mandatory (M) and which are optional (O) in a response/confirmation information flow.

Copyright International Organization for Standardization
Provided by IHS under license with ISO
No reproduction or networking permitted without license from IHS Not for Resale

9.2.1.1 INFORM 1

This unconfirmed information flow, which conveys the calling party name, shall be sent over relationship ra (optional in case of name not available otherwise mandatory). It shall contain the service elements listed in table 1.

Table 1 - Content of INFORM 1

Service Elements	Allowed Value	Request
Presentation Indicator	presentation not restricted presentation restricted calling party name not available	M
Name		O (Note)
Type of Character Set		O (Note)
Application Identifier		O

NOTE - The service element shall be present if and only if the name is available.

9.2.1.2 INFORM 2

This unconfirmed information flow, which conveys the calling party name, shall be sent over relationship rb (optional in case of name not available, otherwise mandatory). It shall contain the service elements listed in table 2.

Table 2 - Content of INFORM 2

Service Elements	Allowed Value	Request
Presentation Indicator	presentation not restricted presentation restricted calling party name not available	M
Name		O (Note)
Type of Character Set		O (Note)
Application Identifier		O

NOTE - The service element shall be present as indicated if the name is available and not restricted or if restricted and the called user has an override service profile. Otherwise the service element shall be omitted.

9.2.2 Relationship of Information Flows to Basic Call Information Flows

The SS-CNIP information flows shall be sent at the same time as the basic call information flow SETUP req/ind (r2/r3)

Copyright International Organization for Standardization
Provided by IHS under license with ISO
No reproduction or networking permitted without license from IHS
Not for Resale

9.2.3 Information Flow Sequences

Signalling procedures shall be provided in support of the information flow sequences specified below. In addition, signalling procedures shall be provided to cover other sequences arising from error situations, interactions with basic call, interactions with other supplementary services, different topologies, etc..

In the figure, SS-CNIP information flows are represented by solid arrows and basic call information flows are represented by shaded arrows. An ellipse embracing two information flows indicates that the two information flows occur together. Within a column representing an SS-CNIP functional entity, the numbers refer to functional entity actions listed in 9.3.

Figure 5 shows the information flow sequence for normal operation of SS-CNIP. (Note that not all basic call information flows are shown in this figure; only those which have related name identification information flows.)

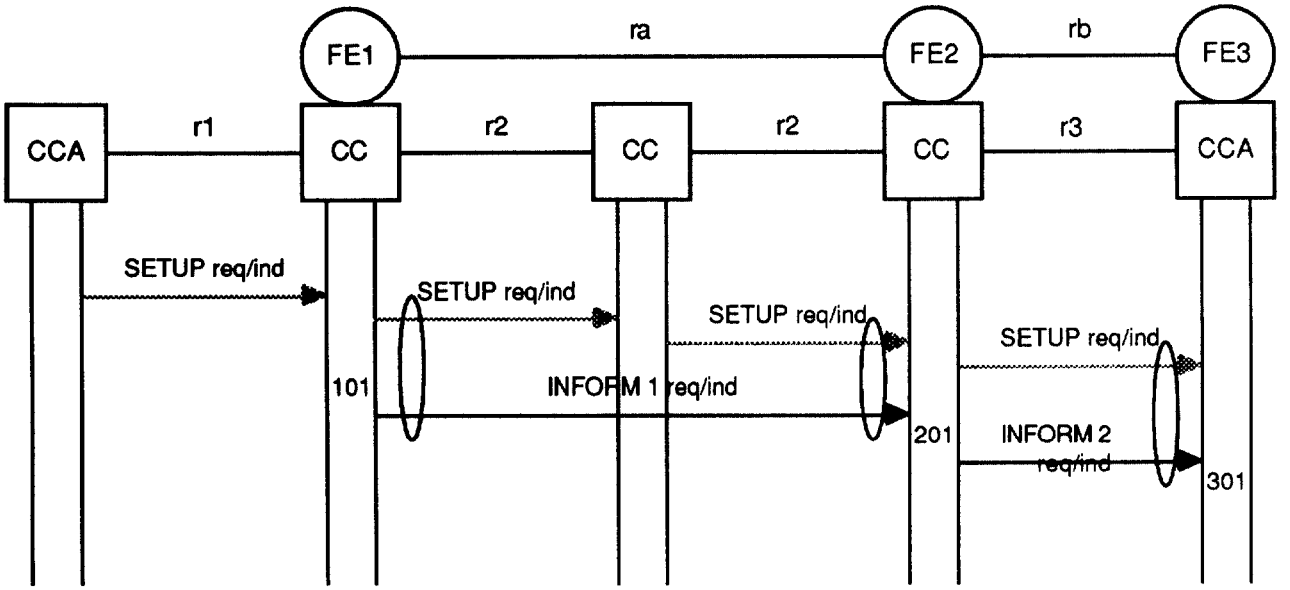

Figure 5 - Information Flow Sequence for SS-CNIP

9.3 The Functional Entity Actions

The following FE actions shall occur at the points indicated in the figure of 9.2.3:

- **FE1 action 101:**
  Generate INFORM 1 request/indication (if available) and send it at the same time as the basic call SETUP request/indication to the subsequent functional entity FE2.
- **FE2 action 201:**
  Receive INFORM 1 request/indication, remove the name information according to element presentation indicator and the override service profile of the called user and send INFORM 2 at the same time as the basic call SETUP request/indication to the functional entity FE3.
- **FE3 action 301:**
  Receive INFORM 2 request/indication and provide the received information to the called PISN user.

Copyright International Organization for Standardization
Provided by IHS under license with ISO
No reproduction or networking permitted without license from IHS
Not for Resale

9.4 Functional Entity Behaviour

Figures 6, 7 and 8 are intended to illustrate typical FE behaviour in terms of information flows sent and received. The figures show the behaviour of the functional entities FE1, FE2 and FE3 in providing SS-CNIP using the SDL defined in CCITT Rec. Z.100.

Output signals to the right represent information flows to other functional entities or primitives to the called PISN user. Input signals from the left represent information flows from other functional entities or internal stimuli. The relationship to the basic call process is indicated in the annotations.

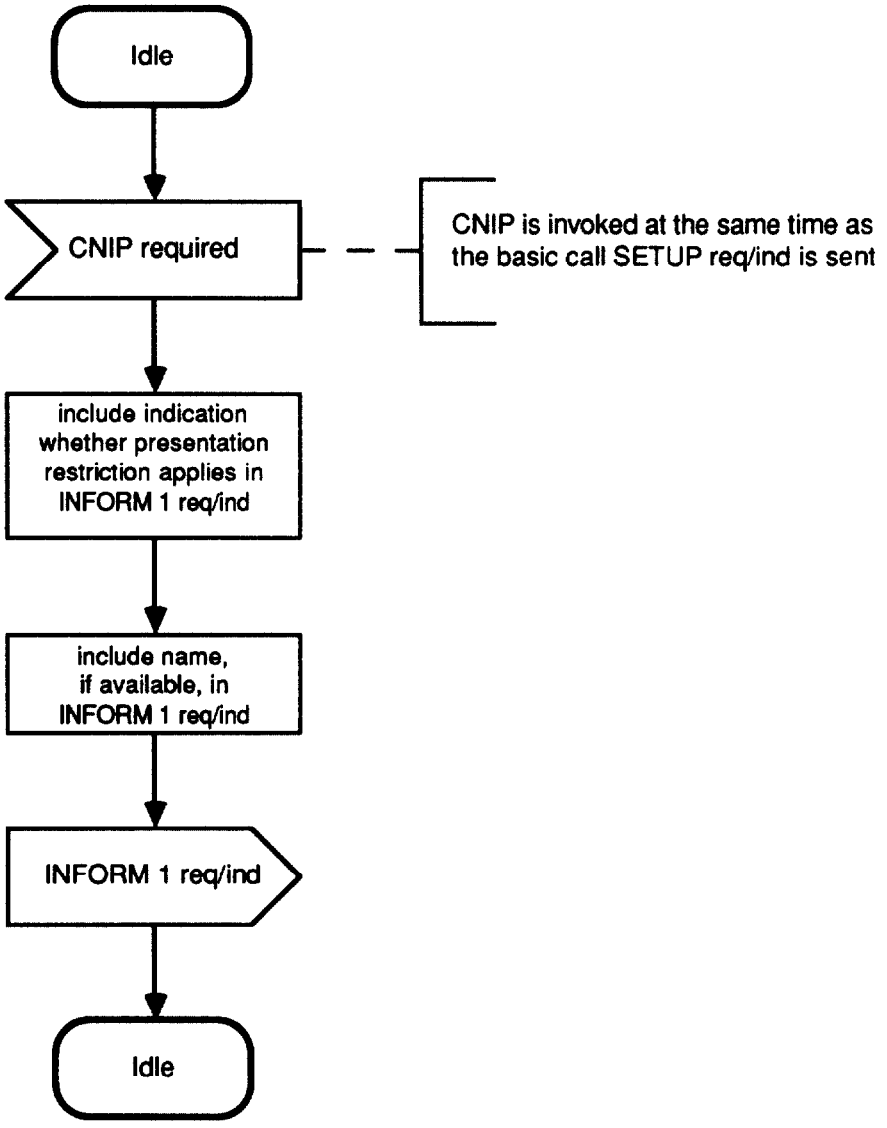

Figure 6 - SDL for Functional Entity FE1

Copyright International Organization for Standardization
Provided by IHS under license with ISO
No reproduction or networking permitted without license from IHS
Not for Resale

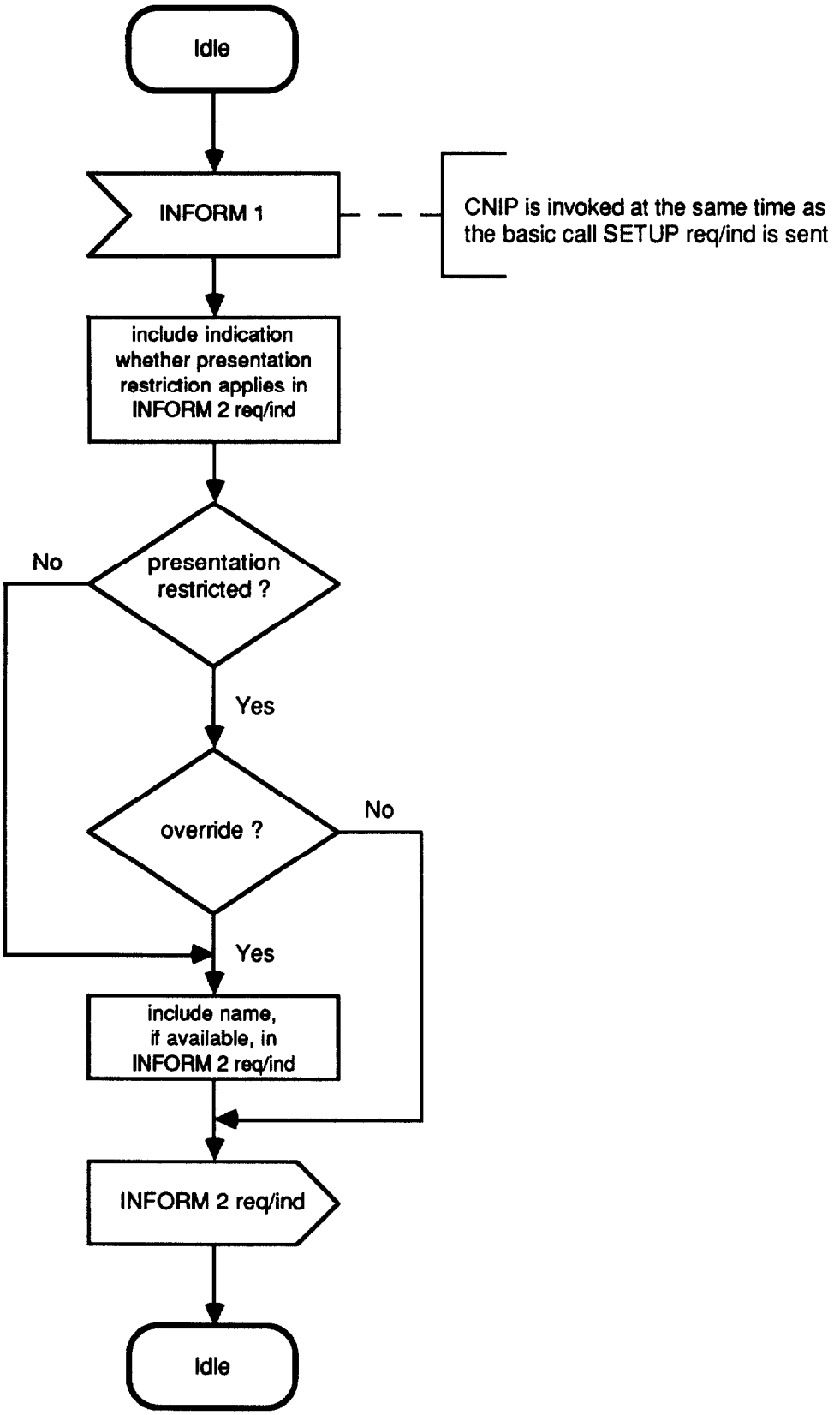

Figure 7 - SDL for Functional Entity FE2

Copyright International Organization for Standardization
Provided by IHS under license with ISO
No reproduction or networking permitted without license from IHS
Not for Resale

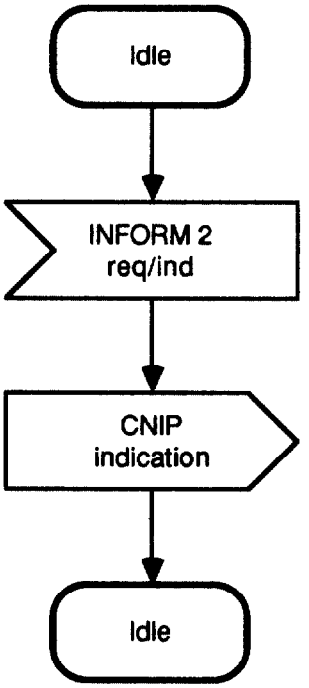

Figure 8 - SDL for functional Entity FE3

9.5 Allocation of Functional Entities to Physical Locations

The allocation of FEs to physical equipment for SS-CNIP as shown in table 3 shall apply. If the served user's TE is stimulus with respect to SS-CNIP, FE3 shall be allocated in the Destination PINX.

Table 3 - Allocation of functional entities to physical location for SS-CNIP

	Calling User	Called User	
Scenario	FE1	FE2	FE3
Scenario 1	Originating PINX	Destination PINX	TE
Scenario 2	Originating PINX	Gateway PINX	other network
Scenario 3	other network	Destination PINX	TE

Copyright International Organization for Standardization
Provided by IHS under license with ISO
No reproduction or networking permitted without license from IHS
Not for Resale

10 SS-CONP Stage 2 Description

10.1 Functional Model

10.1.1 Functional Model Description

The functional model for SS-CONP shall comprise the FEs "CONP Provision" (FE4), "CONP Presentation" (FE5) and "CONP Reception" (FE6). A relationship rc shall exist between FE4 and FE5 and a relationship rd shall exist between FE5 and FE6. Figure 9 shows these FEs and relationships.

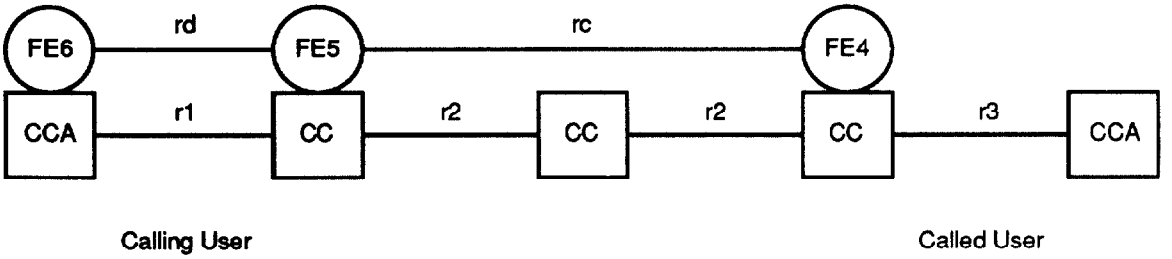

Figure 9 - Functional model and relationship to basic call for SS-CONP

10.1.2 Description of the Functional Entities

The functional entities required by SS-CONP shall be as follows:

- FE4 CONP Provision: responsible for provision of the connected/called/busy party name information and associated indicators to FE5.
- FE5 CONP Presentation: responsible for reporting the connected/called/busy party name information and associated indicators to FE6.
- FE6 CONP Reception: responsible for delivery of the connected/called/busy party name information and associated indicators to the PISN user.

NOTES

1 The structure of the name information is described in annex A of this International Standard.

2 The possibility, that the name information is stored in another FE (data base) and provided to FE4 on request for delivery to FE5 is outside the scope of this International Standard.

3 Interactions with certain supplementary services may cause the connected/busy party name to differ from the called party name.

10.1.3 Relationship of the Functional Model to the Basic Call Functional Model

Figure 9 shows also the relationship with a basic service for SS-CONP.

Copyright International Organization for Standardization
Provided by IHS under license with ISO
No reproduction or networking permitted without license from IHS Not for Resale

10.2 Information Flows

10.2.1 Definition of Information Flows

The information flows INFORM 3, INFORM 4, INFORM 5, INFORM 6, INFORM 7 and INFORM 8 shall apply for SS-CONP.

In the tables below, the column headed "Request" indicates which of the service elements are mandatory (M) and which are optional (O) in an request/indication flow. The column headed "Confirm" indicates which of the service elements are mandatory (M) and which are optional (O) in a response/confirmation information flow.

10.2.1.1 INFORM 3

This unconfirmed information flow, which conveys the connected party name, shall be sent over relationship rc (optional in case of name not available, otherwise mandatory). It shall contain the service elements listed in table 4.

Table 4 - Content of INFORM 3

Service Elements	Allowed Value	Request
Presentation Indicator	presentation not restricted presentation restricted connected party name not available	M
Name		O (Note)
Type of Character Set		O (Note)
Application Identifier		O

NOTE - The service element shall be present if and only if the name is available.

10.2.1.2 INFORM 4

This unconfirmed information flow, which conveys the connected party name, shall be sent over relationship rd (optional in case of name not available, otherwise mandatory). It shall contain the service elements listed in table 5.

Table 5 - Content of INFORM 4

Service Elements	Allowed Value	Request
Presentation Indicator	presentation not restricted presentation restricted connected party name not available	M
Name		O (Note)
Type of Character Set		O (Note)
Application Identifier		O

NOTE - The service element shall be present as indicated if the name is available and not restricted or if restricted and the calling user has an override service profile. Otherwise the service element shall be omitted.

Copyright International Organization for Standardization
Provided by IHS under license with ISO
No reproduction or networking permitted without license from IHS
Not for Resale

10.2.1.3 INFORM 5

This unconfirmed information flow, which conveys the called party name, may be sent over relationship rc. It shall contain the service elements listed in table 6.

Table 6 - Content of INFORM 5

Service Elements	Allowed Value	Request
Presentation Indicator	presentation not restricted presentation restricted called party name not available	M
Name		O (Note)
Type of Character Set		O (Note)
Application Identifier		O

NOTE - The service element shall be present if and only if the name is available.

10.2.1.4 INFORM 6

This unconfirmed information flow, which conveys the called party name, may be sent over relationship rd. It shall contain the service elements listed in table 7.

Table 7 - Content of INFORM 6

Service Elements	Allowed Value	Request
Presentation Indicator	presentation not restricted presentation restricted called party name not available	M
Name		O (Note)
Type of Character Set		O (Note)
Application Identifier		O

NOTE - The service element shall be present as indicated if the name is available and not restricted or if restricted and the calling user has an override service profile. Otherwise the service element shall be omitted.

Copyright International Organization for Standardization
Provided by IHS under license with ISO
No reproduction or networking permitted without license from IHS Not for Resale

10.2.1.5 INFORM 7

This unconfirmed information flow, which conveys the busy party name, may be sent over relationship rc. It shall contain the service elements listed in table 8.

Table 8 - Content of INFORM 7

Service Elements	Allowed Value	Request
Presentation Indicator	presentation not restricted presentation restricted busy party name not available	M
Name		O (Note)
Type of Character Set		O (Note)
Application Identifier		O

NOTE - The service element shall be present if and only if the name is available.

10.2.1.6 INFORM 8

This unconfirmed information flow, which conveys the busy party name, may be sent over relationship rd. It shall contain the service elements listed in table 9.

Table 9 - Content of INFORM 8

Service Elements	Allowed Value	Request
Presentation Indicator	presentation not restricted presentation restricted busy party name not available	M
Name		O (Note)
Type of Character Set		O (Note)
Application Identifier		O

NOTE - The service element shall be present as indicated if the name is available and not restricted or if restricted and the calling user has an override service profile. Otherwise the service element shall be omitted.

10.2.2 Relationship of Information Flows to Basic Call Information Flows

The SS-CONP information flows INFORM 3 request/indication and INFORM 4 request/indication shall be sent at the same time as the basic call information flow SETUP response/confirmation (r2/r1) for the connected party name. The SS-CONP information flows INFORM 5 request/indication and INFORM 6 request/indication shall be sent at the same time as the basic call information flow REPORT request/indication (r2/r1) for the called party name. The SS-CONP information flows INFORM 7 request/indication and INFORM 8 request/indication shall be sent at the same time as the basic call information flow RELEASE request/indication (r2) and DISCONNECT request/indication (r1) for the busy party name.

Copyright International Organization for Standardization
Provided by IHS under license with ISO
No reproduction or networking permitted without license from IHS
Not for Resale

10.2.3 Information Flow Sequences

Signalling procedures shall be provided in support of the information flow sequences specified below. In addition, signalling procedures shall be provided to cover other sequences arising from error situations, interactions with basic call, interactions with other supplementary services, different topologies, etc..

In the figures, SS-CONP information flows are represented by solid arrows and basic call information flows are represented by shaded arrows. An ellipse embracing two information flows indicates that the information flows occur together. Within a column representing an SS-CONP functional entity, the numbers refer to functional entity actions listed in 10.3.

Figures 10 and 11 show the information flow sequences for normal operation of SS-CONP. (Note that not all basic call information flows are shown in these figures; only those which have related name identification information flows.)

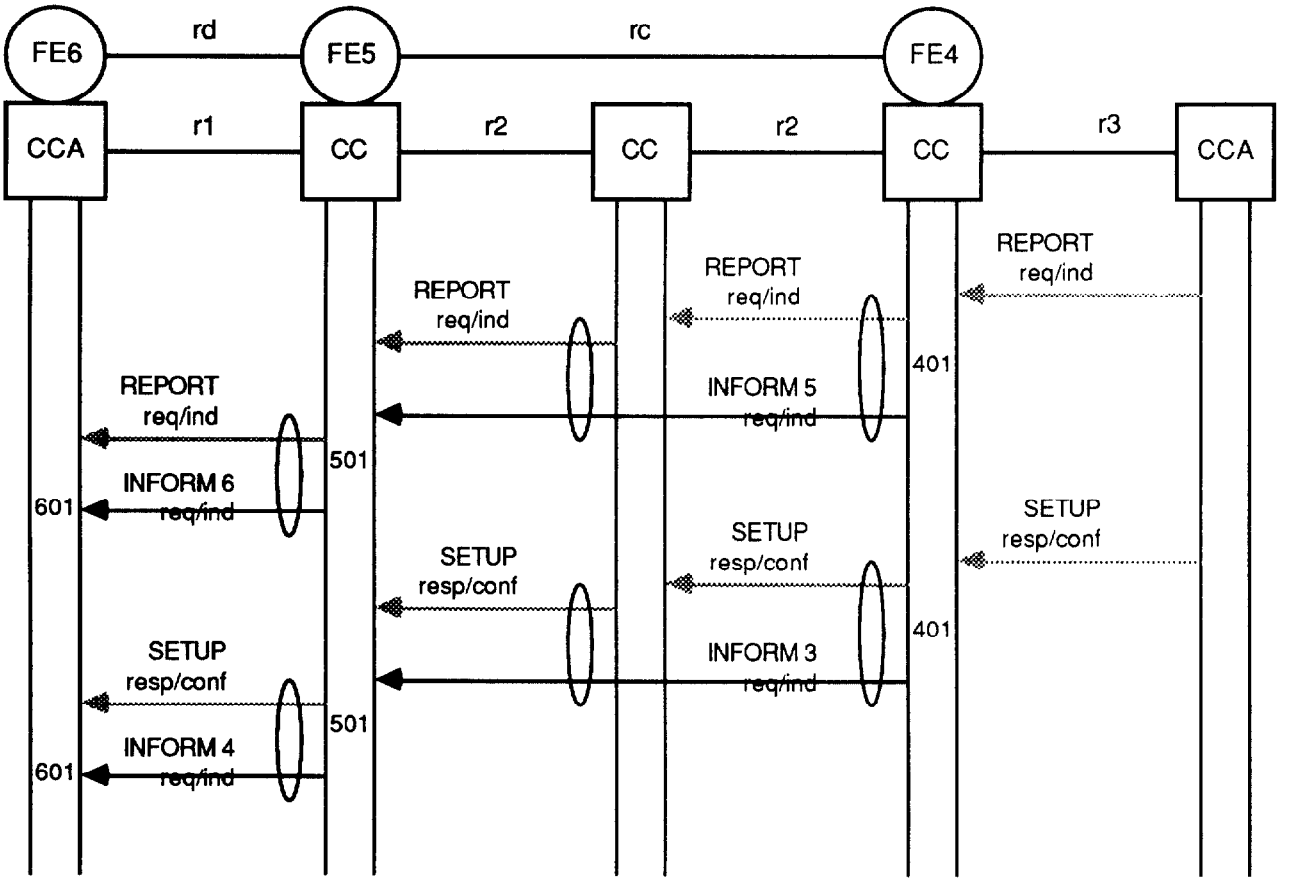

Figure 10 - Information Flow Sequence for SS-CONP when the called user is free

Copyright International Organization for Standardization
Provided by IHS under license with ISO
No reproduction or networking permitted without license from IHS
Not for Resale

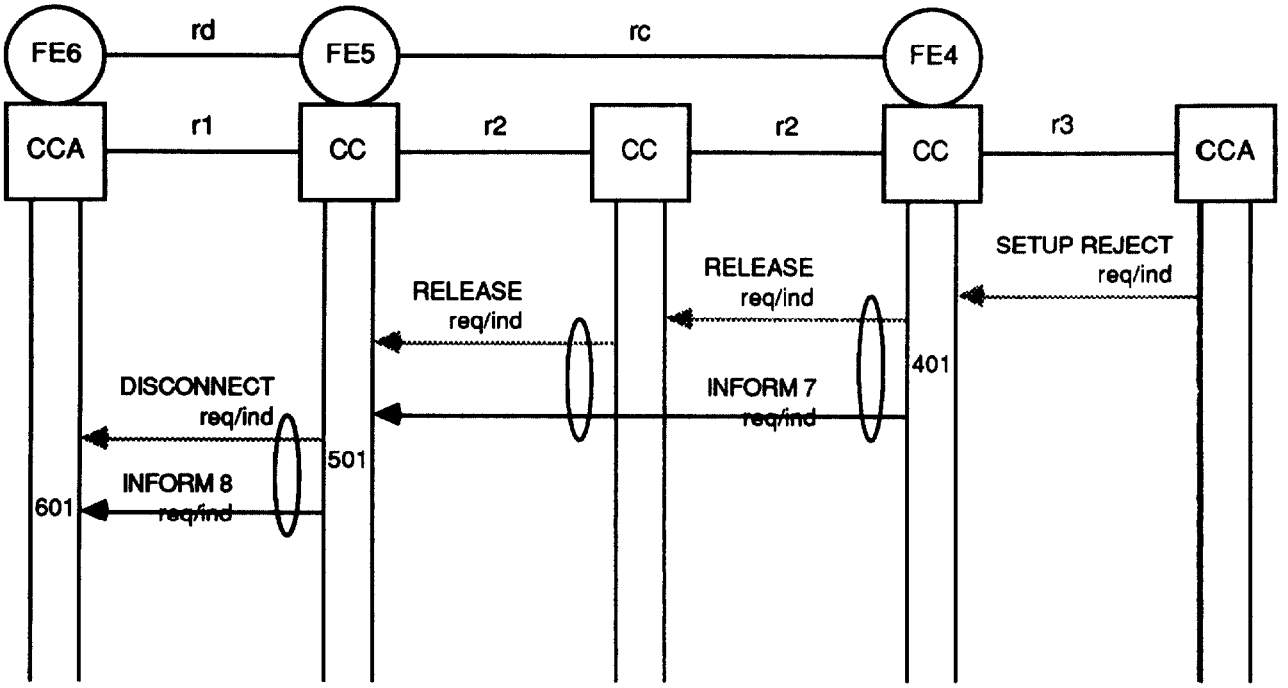

Figure 11 - Information Flow Sequence for SS-CONP when the called user is busy

10.3 Functional Entity Actions

The following FE actions shall occur at the points indicated in the figures of 10.2.3:

- **FE4 action 401:**
  Generate INFORM 3 request/indication (if available) and send it at the same time as the basic call SETUP response/confirmation to the subsequent functional entity FE5. Generate optionally INFORM 5 request/indication (if available) and send it at the same time as the basic call REPORT request/indication to the subsequent functional entity FE5. Generate optionally INFORM 7 request /indication (if available) and send it at the same time as the basic call RELEASE request/indication to the subsequent functional entity FE5.

- **FE5 action 501:**
  Receive INFORM 3 request/indication, remove the name according to service element Presentation Indicator and the override service profile of the calling user and send this information in INFORM 4 request/indication at the same time as the basic call SETUP response/confirmation to the functional entity FE6. Receive optionally INFORM 5 request/indication, remove the name according to service element Presentation Indicator and the override service profile of the calling user and send this information in INFORM 6 request/indication at the same time as the basic call REPORT request/indication to the functional entity FE6. Receive optionally INFORM 7 request/indication, remove the name according to service element Presentation Indicator and the override service profile of the calling user and send this information in INFORM 8 request/indication at the same time as the basic call DISCONNECT request/indication to the entity FE6.

- **FE6 action 601:**
  Receive INFORM 4 request/indication, receive optionally INFORM 6 request/indication and INFORM 8 request/indication and provide the received information to the calling PISN user.

Copyright International Organization for Standardization
Provided by IHS under license with ISO
No reproduction or networking permitted without license from IHS
Not for Resale

10.4 Functional Entity Behaviour

Figures 12, 13, and 14 are intended to illustrate typical FE behaviour in terms of information flows sent and received. The figures show the behaviour of the functional entities FE4, FE5 and FE6 in providing SS-CONP using the SDL defined in CCITT Rec. Z.100.

Output signals to the left represent information flows to other functional entities or primitives to the calling PISN user. Input signals from the right represent information flows from other functional entities or internal stimuli. The relationship to the basic call process is indicated in the annotations.

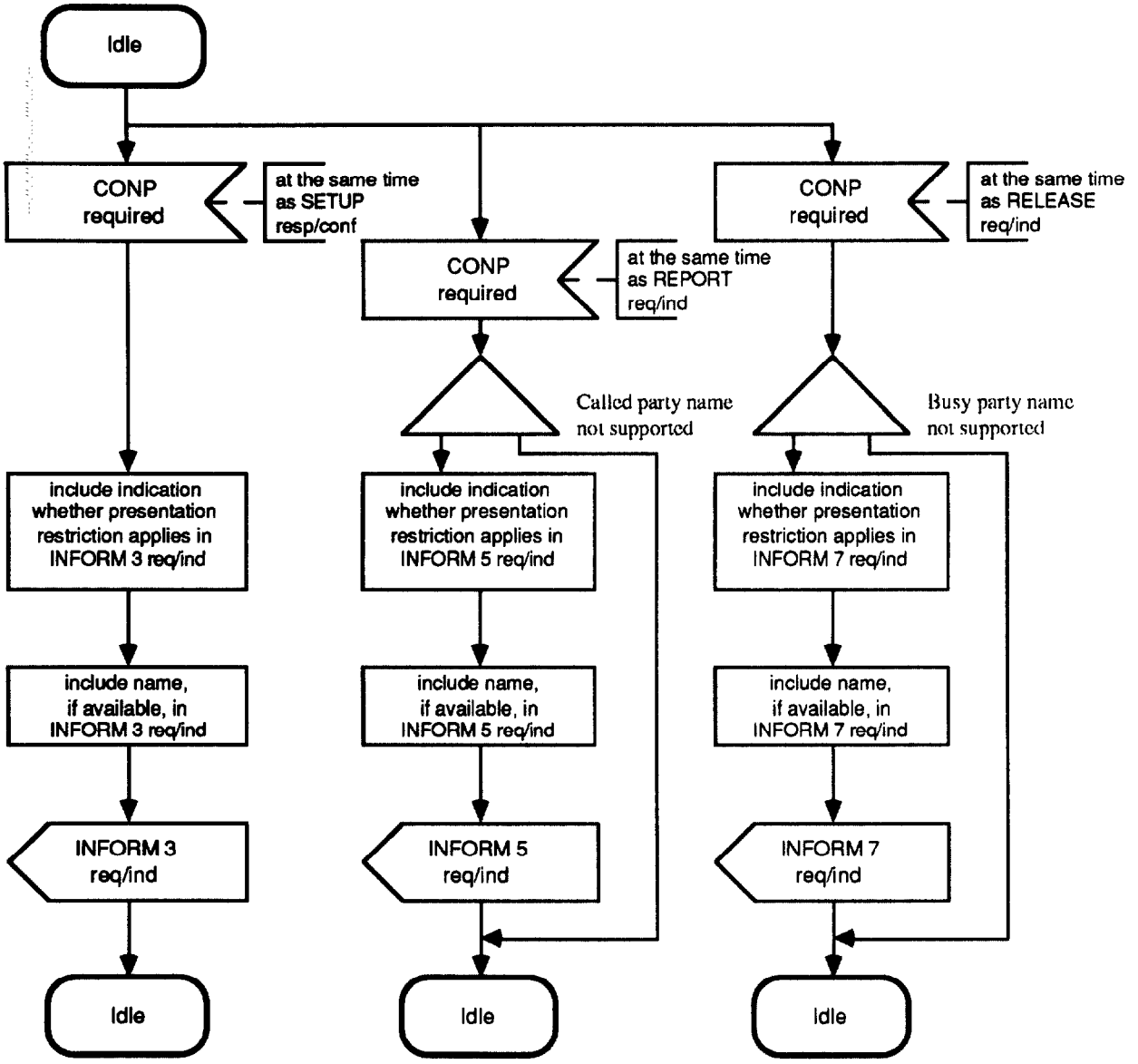

Figure 12 - SDL for Functional Entity FE4

Copyright International Organization for Standardization
Provided by IHS under license with ISO
No reproduction or networking permitted without license from IHS
Not for Resale

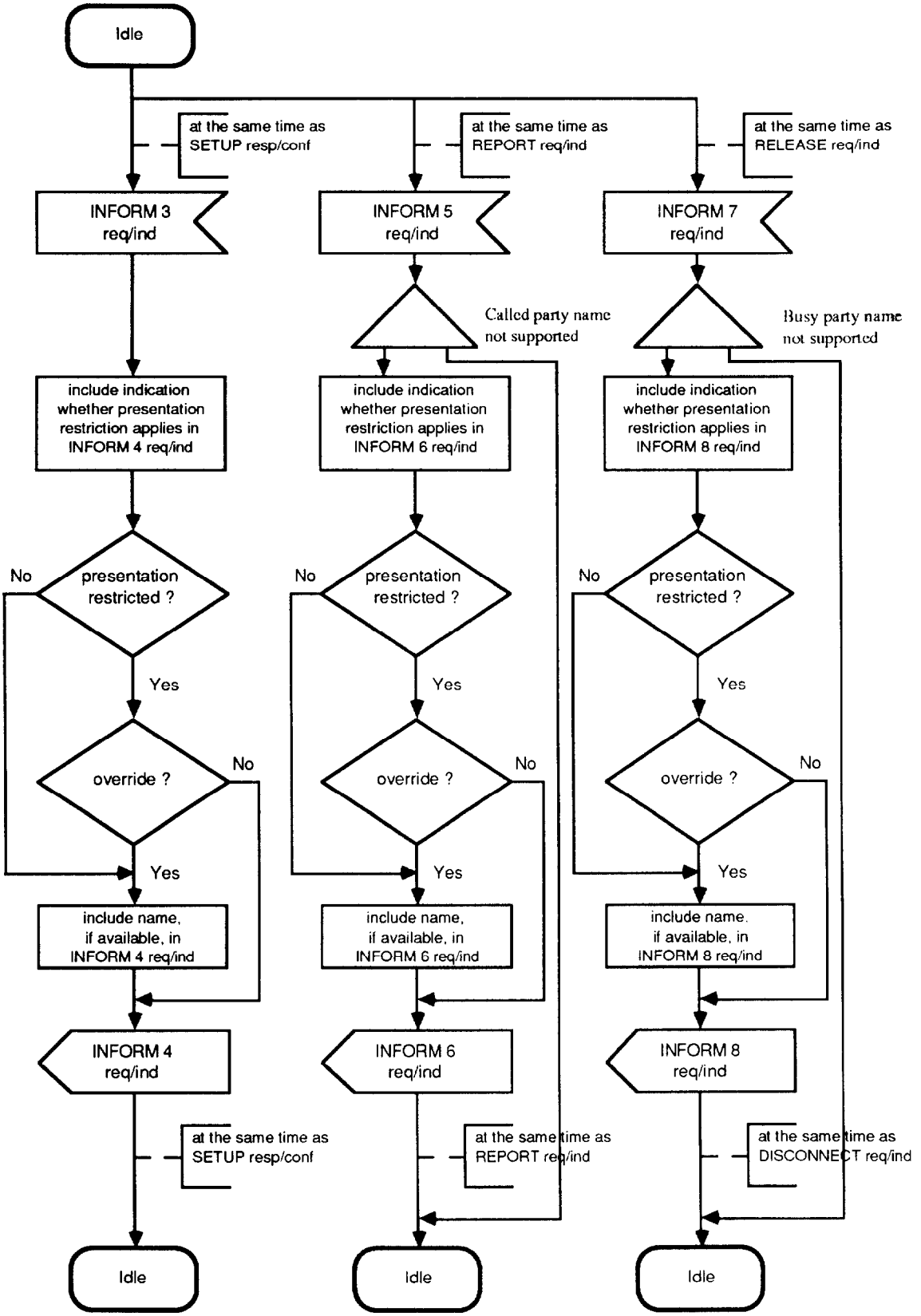

Figure 13 - SDL for Functional Entity FE5

Copyright International Organization for Standardization
Provided by IHS under license with ISO
No reproduction or networking permitted without license from IHS
Not for Resale

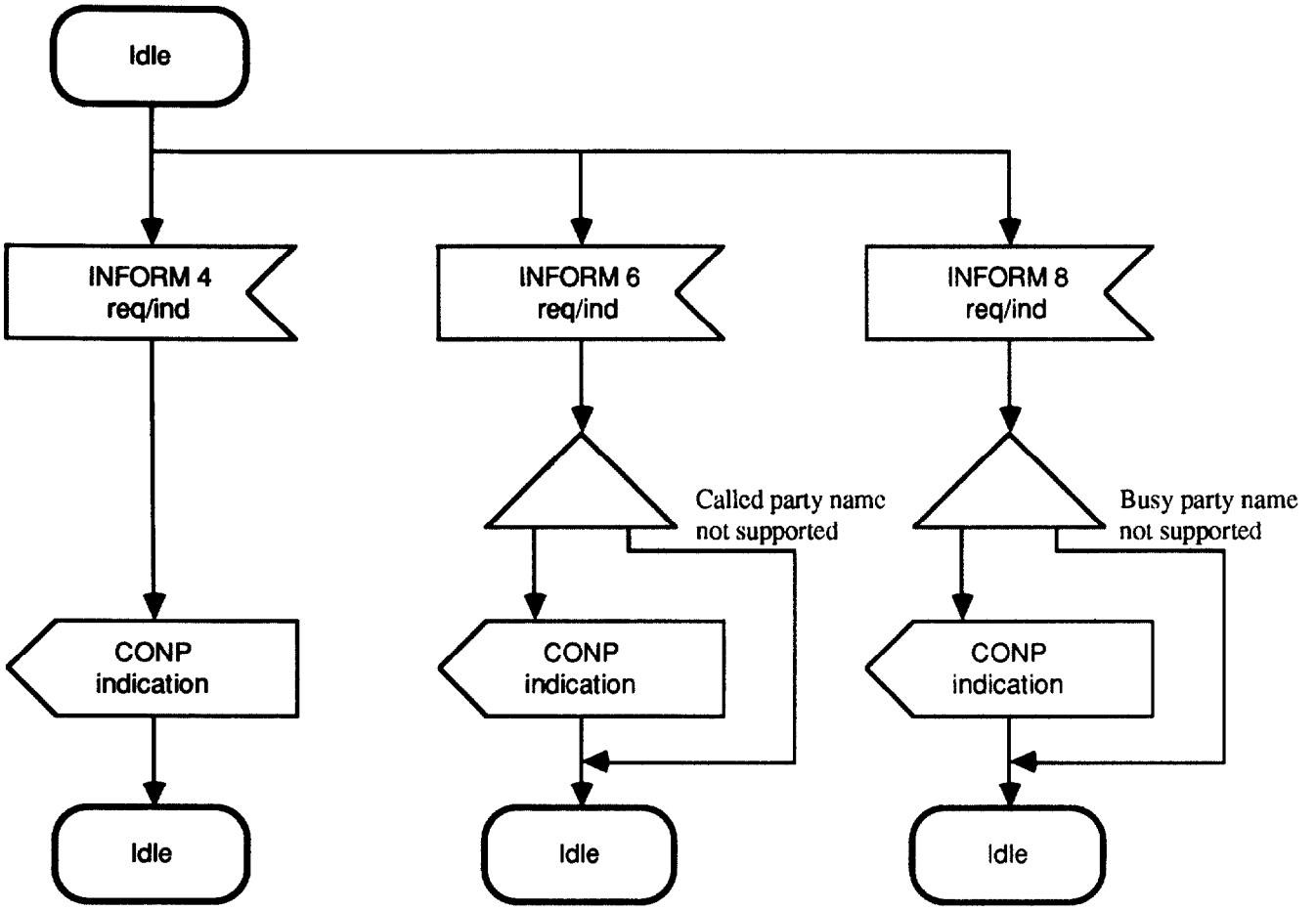

Figure 14 - SDL for Functional Entity FE6

10.5 Allocation of Functional Entities to Physical Locations

The allocation of FEs to physical equipment for SS-CONP as shown in table 10 shall apply. If the served user's TE is stimulus with respect to SS-CONP, FE6 shall be located in the Originating PINX.

Table 10 - Allocation of functional entities to physical location for SS-CONP

	Calling User		Called User
Scenario	FE6	FE5	FE4
Scenario 1	TE	Originating PINX	Destination PINX
Scenario 2	TE	Originating PINX	other network
Scenario 3	other network	Gateway PINX	Destination PINX

Copyright International Organization for Standardization
Provided by IHS under license with ISO
No reproduction or networking permitted without license from IHS
Not for Resale

11 SS-CNIR Stage 2 Description

11.1 Functional Model

11.1.1 Functional Model Description

The functional model for SS-CNIR shall comprise the FEs "Restriction Request" (FE7) and "Restriction Control" (FE8). A relationship re shall exist between FE7 and FE8. Figure 15 shows these FEs and relationships.

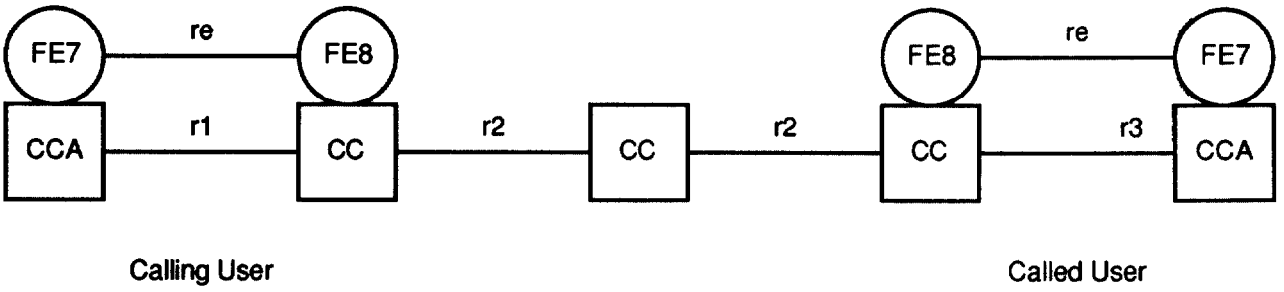

Figure 15 - Functional model and relationship to basic call for SS-CNIR

11.1.2 Description of the Functional Entities

The functional entities required by SS-CNIR shall be as follows:

- FE7 Restriction Request: responsible for receiving PISN user requests for override of the temporary mode default and passing them on to FE8.
- FE8 Restriction Control: responsible for determining whether to invoke restriction on behalf of a user in a call, based on the user's service profile and any requests from FE7 for the override of the temporary mode default.

11.1.3 Relationship of the Functional Model to the Basic Call Functional Model

Figure 15 shows also the relationship with a basic service for SS-CNIR.

Copyright International Organization for Standardization
Provided by IHS under license with ISO
No reproduction or networking permitted without license from IHS
Not for Resale

11.2 Information Flows

11.2.1 Definition of Information Flows

The information flow RESTRICT shall apply for SS-CNIR.

In the table below, the column headed "Request" indicates which of the service elements are mandatory (M) and which are optional (O) in an request/indication information flow. The column headed "Confirm" indicates which of the service elements are mandatory (M) and which are optional (O) in a response/confirmation information flow.

This unconfirmed information flow, which conveys to a PISN user a request to override the SS-CNIR temporary mode default, shall be sent over relationship re. It shall contain the service element listed in table 11.

Table 11 - Content of RESTRICT

Service Elements	Allowed Value	Request	Confirm
Restriction Indicator	presentation not restricted presentation restricted	M	

11.2.2 Relationship of Information Flows to Basic Call Information Flows

When the calling PISN user wishes to override the SS-CNIR temporary mode default, the Restrict request/indication information flow shall be sent at the same time as the basic call information flow SETUP request/indication (r1).

When the called PISN user wishes to override the SS-CNIR temporary mode default, the Restrict request/indication information flow shall be sent at the same time as the basic call information flow SETUP response/confirmation (r3).

NOTE - If FE8 invokes SS-CNIR on behalf of the calling or called user (automatically or on request from the PISN user), an indication that restriction applies is included in the INFORM 1 request/indication, INFORM 3 request/indication, INFORM 5 request/indication or INFORM 7 request/indication information flow respectively. It is then the responsibility of the FEs of SS-CNIP or SS-CONP to ensure that identification information is not presented to the other user.

11.2.3 Information Flow Sequences

Signalling procedures shall be provided in support of the information flow sequences specified below. In addition, signalling procedures shall be provided to cover other sequences arising from error situations, interactions with basic call, interactions with other supplementary services, different topologies, etc..

In the figure, SS-CNIR information flows are represented by solid arrows and basic call information flows are represented by shaded arrows. An ellipse embracing two information flows indicates that the two information flows occur together. Within a column representing an SS-CNIR functional entity, the numbers refer to functional entity actions listed in 11.3

Copyright International Organization for Standardization
Provided by IHS under license with ISO
No reproduction or networking permitted without license from IHS Not for Resale

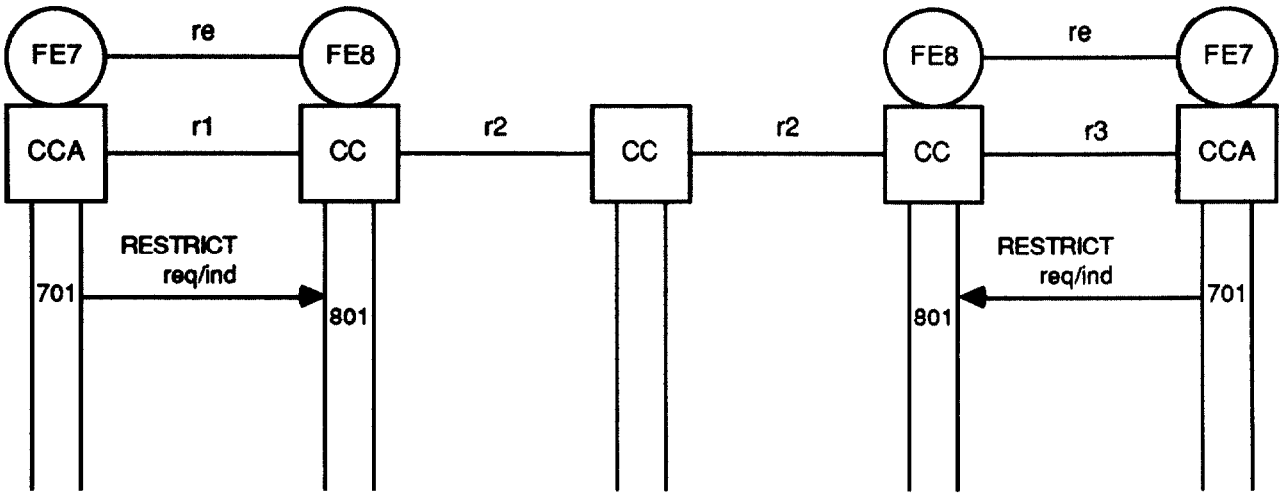

Figure 16 - Information Flow Sequence for SS-CNIR

11.3 Functional Entity Actions

The following FE actions shall occur at the points indicated in the figure of 11.2.2 3:

- **FE7 action 701:**
  If served user wishes to override the CNIR temporary mode restriction default, generate a RESTRICT request/indication and send to FE8.

- **FE8 action 801:**
  Assign the appropriate presentation restriction indicator to the served user's Name Identification, based on whether CNIR permanent mode or temporary mode applies and, in the case of temporary mode, whether a request to override the default has been received from FE7.

11.4 Functional Entity Behaviour

Figures 17 and 18 are intended to illustrate typical FE behaviour in terms of information flows sent and received. The figures show the behaviour of the functional entities FE7 and FE8 in providing SS-CNIR using the SDL defined in CCITT Rec. Z.100.

Output signals to the right represent information flows to other functional entities. Input signals from the left represent internal stimuli or input from other functional entities. The relationship to the basic call process is indicated in the annotations.

Copyright International Organization for Standardization
Provided by IHS under license with ISO
No reproduction or networking permitted without license from IHS
Not for Resale

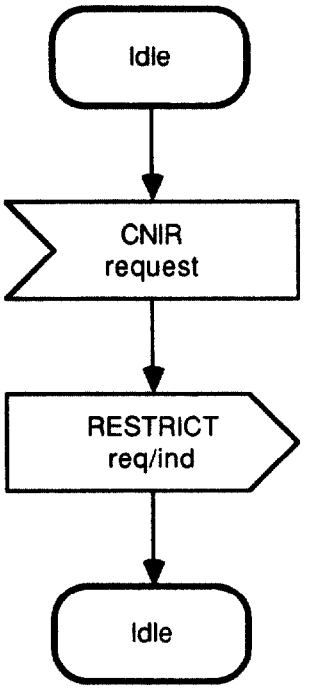

Figure 17 - SDL for Functional Entity FE7

Copyright International Organization for Standardization
Provided by IHS under license with ISO
No reproduction or networking permitted without license from IHS
Not for Resale

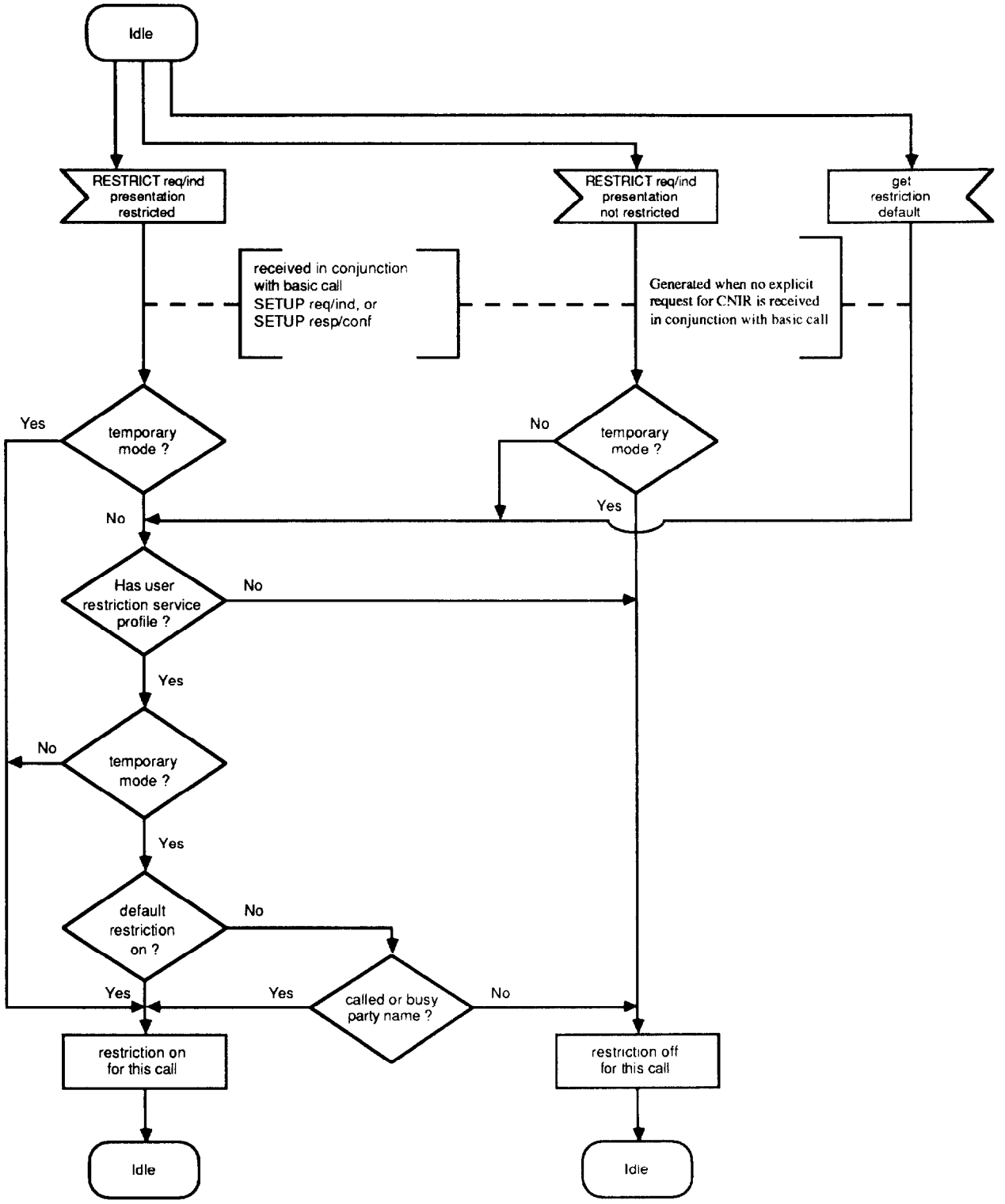

Figure 18 - SDL for Functional Entity FE8

Copyright International Organization for Standardization
Provided by IHS under license with ISO
No reproduction or networking permitted without license from IHS
Not for Resale

11.5 Allocation of Functional Entities to Physical Locations

The allocation of FEs to physical equipment for SS-CNIR as shown in table 12 shall apply. If the served user's TE is stimulus with respect to SS-CNIR, FE7 shall be located in the served user's PINX.

Table 12 - Allocation of functional entities to physical location for SS-CNIR

	Calling User		Called User	
Scenario	**FE7**	**FE8**	**FE8**	**FE7**
Scenario 1	TE	Originating PINX		
Scenario 2			Destination PINX	TE

Copyright International Organization for Standardization
Provided by IHS under license with ISO
No reproduction or networking permitted without license from IHS
Not for Resale

Annex A

(normative)

Structure and Content of a PISN Name

The string of characters, which constitutes a name, shall be accompanied by the indication of the type of used character set and optionally by an application identifier.

The application identifier is defined as manufacturer specific information which can imply the structure of the name information.

Various character sets may be used including an application specific character set which is qualified by manufacturer specific information. At least one of the specified standard character sets shall be supported by a manufacturer.

The list of possible character set shall include:

- The 8-bit single byte character set defined in ISO 8859-1, Part 1: Latin alphabet No.1; and
- The character set defined in CCITT Rec. T.61.

Not all of the specified characters in a set have to be implemented by a PINX or TE.

Copyright International Organization for Standardization
Provided by IHS under license with ISO
No reproduction or networking permitted without license from IHS
Not for Resale

© ISO/IEC

ICS 35.120

Descriptors: data processing, information interchange, telecommunications, network interconnection, telecommunication network, private network, ISDN, data transmission, services.

Price based on 37 pages

Copyright International Organization for Standardization
Provided by IHS under license with ISO
No reproduction or networking permitted without license from IHS

Not for Resale