INTERNATIONAL STANDARD

ISO/IEC 13863

Second edition
1998-12-15

Information technology — Telecommunications and information exchange between systems — Private Integrated Services Network — Specification, functional model and information flows — Path replacement additional network feature

Technologies de l'information — Télécommunications et échange d'information entre systèmes — Réseau privé à intégration de services — Spécification, modèle fonctionnel et flux d'informations — Caractéristique de réseau additionnelle de remplacement de chemin

Reference number
ISO/IEC 13863:1998(E)

Copyright International Organization for Standardization
Provided by IHS under license with ISO
No reproduction or networking permitted without license from IHS

Not for Resale

Contents

Foreword v

Introduction vi

1 Scope 1

2 Conformance 1

3 Normative references 1

4 Definitions 1

4.1 External definitions 2
4.2 Other definitions 2

4.2.1 Additional network feature 2
4.2.2 ANF-PR user 2
4.2.3 Call, basic call 2
4.2.4 Connection 2
4.2.5 New connection 2
4.2.6 Old connection 2
4.2.7 Trombone connection 2

5 List of acronyms 3

6 ANF-PR stage 1 specification 3

6.1 Description 3

6.1.1 General description 3
6.1.2 Qualifications on applicability to telecommunication services 3

6.2 Procedures 3

6.2.1 Provision/withdrawal 3
6.2.2 Normal procedures 3
6.2.3 Exceptional procedures 4

6.3 Interaction with other supplementary services and ANFs 4

6.3.1 Calling Line Identification Presentation (SS-CLIP) 4
6.3.2 Connected Line Identification Presentation (SS-COLP) 4
6.3.3 Calling/connected Line Identification Restriction (SS-CLIR) 4
6.3.4 Calling Name Identification Presentation (SS-CNIP) 4
6.3.5 Connected Name Identification Presentation (SS-CONP) 4
6.3.6 Calling/connected Name Identification Restriction (SS-CNIR) 4
6.3.7 Completion of Calls to Busy Subscriber (SS-CCBS) 4
6.3.8 Completion of Calls on No Reply (SS-CCNR) 4
6.3.9 Call Transfer (SS-CT) 4
6.3.10 Call Forwarding Unconditional (SS-CFU) 5

© ISO/IEC 1998

All rights reserved. Unless otherwise specified, no part of this publication may be reproduced or utilized in any form or by any means, electronic or mechanical, including photocopying and microfilm, without permission in writing from the publisher.

ISO/IEC Copyright Office • Case Postale 56 • CH-1211 Genève 20 • Switzerland

Printed in Switzerland

Copyright International Organization for Standardization
Provided by IHS under license with ISO
No reproduction or networking permitted without license from IHS Not for Resale

6.3.11 Call Forwarding Busy (SS-CFB) **5**
6.3.12 Call Forwarding No Reply (SS-CFNR) **5**
6.3.13 Call Deflection (SS-CD) **5**

6.4 Interworking considerations **5**
6.5 Overall SDL **5**

7 ANF-PR stage 2 specification - basic operation **6**

7.1 Functional model **6**

7.1.1 Functional model description **6**
7.1.2 Description of the functional entities **7**
7.1.3 Relationship of functional model to basic call functional model **7**

7.2 Information flows **8**

7.2.1 Definition of information flows **8**
7.2.2 Relationship of information flows to basic call information flows **9**
7.2.3 Examples of information flow sequences **9**

7.3 Functional entity actions **12**

7.3.1 Functional entity actions of FE1 **12**
7.3.2 Functional entity actions of FE2 **12**

7.4 Functional entity behaviour **12**

7.4.1 Behaviour of FE1 **13**
7.4.2 Behaviour of FE2 **14**

7.5 Allocation of functional entities to physical equipment **15**
7.6 Interworking considerations **15**

8 ANF-PR stage 2 specification - re-use of connection elements **15**

8.1 Functional model **15**

8.1.1 Functional model description **15**
8.1.2 Description of the functional entities **16**
8.1.3 Relationship of functional model to basic call functional model **16**

8.2 Information flows **17**

8.2.1 Definition of information flows **17**
8.2.2 Relationship of information flows to basic call information flows **17**
8.2.3 Examples of information flow sequences **17**

8.3 Functional entity actions **21**

8.3.1 Functional entity actions of FE1 **21**
8.3.2 Functional entity actions of FE2 **21**
8.3.3 Functional entity actions of FE3 **21**

8.4 Functional entity behaviour **21**

8.4.1 Behaviour of FE1 **21**
8.4.2 Enhanced behaviour of FE2 **22**
8.4.3 Behaviour of FE3 **23**

8.5 Allocation of functional entities to physical equipment **24**
8.6 Interworking considerations **24**

9 ANF-PR stage 2 specification - basic operation with inviting entity **24**

9.1 Functional model **24**

9.1.1 Functional model description **24**

Copyright International Organization for Standardization
Provided by IHS under license with ISO
No reproduction or networking permitted without license from IHS Not for Resale

9.1.2 Description of the functional entities **24**
9.1.3 Relationship of functional model to basic call functional model **24**

9.2 Information flows **25**

9.2.1 Definition of information flows **25**
9.2.2 Relationship of information flows to basic call information flows **26**
9.2.3 Examples of information flow sequences **26**

9.3 Functional entity actions **30**

9.3.1 Functional entity actions of FE1´ **30**
9.3.2 Functional entity actions of FE2 **30**
9.3.3 Functional entity actions of FE4 **30**

9.4 Functional entity behaviour **30**

9.4.1 Behaviour of FE1´ **31**
9.4.2 Behaviour of FE2 **32**
9.4.3 Behaviour of FE4 **32**

9.5 Allocation of functional entities to physical equipment **32**
9.6 Interworking considerations **33**

Annexes

A - Circumstances in which ANF-PR might be invoked **34**
B - Avoidance of unacceptable disruption to user information **36**

Copyright International Organization for Standardization
Provided by IHS under license with ISO
No reproduction or networking permitted without license from IHS Not for Resale

Foreword

ISO (the International Organization for Standardization) and IEC (the International Electrotechnical Commission) form the specialized system for worldwide standardization. National bodies that are members of ISO or IEC participate in the development of International Standards through technical committees established by the respective organization to deal with particular fields of technical activity. ISO and IEC technical committees collaborate in fields of mutual interest. Other international organizations, governmental and non-governmental, in liaison with ISO and IEC, also take part in the work.

In the field of information technology, ISO and IEC have established a joint technical committee, ISO/IEC JTC 1. Draft International Standards adopted by the joint technical committee are circulated to national bodies for voting. Publication as an International Standard requires approval by at least 75 % of the national bodies casting a vote.

International Standard ISO/IEC 13863 was prepared by ECMA (as ECMA-175) and was adopted, under a special “fast-track procedure”, by Joint Technical Committee ISO/IEC JTC 1, *Information technology*, in parallel with its approval by national bodies of ISO and IEC.

This second edition cancels and replaces the first edition (ISO/IEC 13863:1995), which has been technically revised.

Annexes A and B of this International Standard are for information only.

--`,,```,,,,````-`-`,,`,,`,`,,`---

Copyright International Organization for Standardization
Provided by IHS under license with ISO
No reproduction or networking permitted without license from IHS Not for Resale

Introduction

This International Standard is one of a series of International Standards defining services and signalling protocols applicable to Private Integrated Services Networks (PISNs). The series uses ISDN concepts as developed by ITU-T and conforms to the framework of International Standards for Open Systems Interconnection as defined by ISO/IEC.

This International Standard specifies the Path Replacement additional network feature.

This International Standard is based upon the practical experience of ECMA member companies and the results of their active and continuous participation in the work of ISO/IEC JTC1, ITU-T, ETSI and other international and national standardization bodies. It represents a pragmatic and widely based consensus.

--`,,```,,,,````-`-`,,`,,`,`,,`---
Copyright International Organization for Standardization
Provided by IHS under license with ISO
No reproduction or networking permitted without license from IHS Not for Resale

Information technology - Telecommunications and information exchange between systems - Private Integrated Services Network - Specification, functional model and information flows - Path replacement additional network feature

1 Scope

This International Standard specifies the Path Replacement additional network feature (ANF-PR), which is applicable to various basic services supported by Private Integrated Services Networks (PISN). Basic services are specified in ISO/IEC 11574.

ANF-PR is a feature which applies to an established call, allowing that call's connection between Private Integrated Services Network Exchanges (PINXs) to be replaced by a new connection. If the new connection is required to satisfy certain criteria, ANF-PR should be used in conjunction with other supplementary services and/or ANFs. Annex A gives examples of the circumstances under which ANF-PR can be used and criteria which can govern the selection of the new connection.

Additional network feature specifications are produced in three stages, according to the method described in CCITT Recommendation I.130 for supplementary services. This International Standard contains the stage 1 and stage 2 specifications of ANF-PR. The stage 1 specification (clause 6) specifies the feature as seen by an entity which initiates path replacement, the ANF-PR user. The stage 2 specification (clauses 7, 8 and 9) identifies the functional entities involved in the feature and the information flows between them. Clause 7 contains the stage 2 specification for basic operation of the feature. Clause 8 contains the stage 2 specification for an enhanced mode of working which can be employed when supported by all the equipment involved. It allows some of the elements of the old connection to be re-used. Clause 9 contains the stage 2 specification for an optional enhancement of the basic operation of the feature. It allows the ANF-PR user to be located in any PINX in the old connection and to decide the direction of the new connection.

2 Conformance

In order to conform to this International Standard, a stage 3 standard shall specify signalling protocols and equipment behaviour that are capable of being used in a PISN which supports the feature specified in this International Standard. This means that, to claim conformance, a stage 3 standard is required to be adequate for the support of those aspects of clause 6 (stage 1) and clauses 7, 8 and 9 (stage 2) which are relevant to the interface or equipment to which the stage 3 standard applies.

3 Normative references

The following standards contain provisions which, through reference in this text, constitute provisions of this International Standard. At the time of publication, the editions indicated were valid. All standards are subject to revision, and parties to agreements based on this International Standard are encouraged to investigate the possibility of applying the most recent editions of the standards indicated below. Members of IEC and ISO maintain registers of currently valid International Standards.

ISO/IEC 11571:1994, *Information technology - Telecommunications and information exchange between systems - Numbering and sub-addressing in private integrated services networks.*

ISO/IEC 11574:1994, *Information technology - Telecommunications and information exchange between systems - Private Integrated Services Network - Circuit-mode 64 kbit/s bearer services - Service description, functional capabilities and information flows.*

ISO/IEC 11579-1:1994, *Information technology - Telecommunications and information exchange between systems - Private Integrated Services Network - Part 1: Reference configuration for PISN Exchanges (PINX).*

ITU-T Rec. I.112:1993, *Vocabulary of terms for ISDNs.*

CCITT Rec. I.130:1988, *Method for the characterization of telecommunication services supported by an ISDN and network capabilities of an ISDN.*

ITU-T Rec. I.210:1993, *Principles of telecommunication services supported by an ISDN and the means to describe them.*

ITU-T Rec. Z.100:1993, *Specification and description language.*

Copyright International Organization for Standardization
Provided by IHS under license with ISO
No reproduction or networking permitted without license from IHS Not for Resale

4 Definitions

For the purposes of this International Standard, the following definitions apply.

4.1 External definitions

Definitions

This International Standard uses the following terms defined in other documents:

– Basic service (ITU-T Rec. I.210)

– Private Integrated Services Network (PISN) (ISO/IEC 11579-1)

– Private Integrated Services Network Exchange (PINX) (ISO/IEC 11579-1)

– Service (ITU-T Rec. I.112)

– Signalling (ITU-T Rec. I.112)

– Supplementary Service (ITU-T Rec. I.210)

– User (except in the context of ANF-PR user) (ISO/IEC 11574)

This International Standard refers to the following basic call functional entities (FEs) defined in ISO/IEC 11574:

– Call Control (CC)

– Call Control Agent (CCA)

This International Standard refers to the following basic call inter-FE relationships defined in ISO/IEC 11574:

– r1

– r2

– r3

This International Standard refers to the following basic call information flows defined in ISO/IEC 11574:

– CHANNEL_ACKNOWLEDGE request/indication

– RELEASE request/indication

– RELEASE response/confirmation

– SETUP request/indication

– SETUP response/confirmation.

This International Standard refers to the following basic call information flow service element defined in ISO/IEC 11574:

– Destination Number.

4.2 Other definitions

4.2.1 Additional network feature : An additional network feature (ANF) is a capability, over and above that of a basic service, provided by a PISN, but not directly to a PISN user.

4.2.2 ANF-PR user : An entity, within a PISN, that requests ANF-PR.

4.2.3 Call, basic call : An instance of the use of a basic service.

4.2.4 Connection : As defined in ITU-T Rec. I.112, but limited to the case of providing for the transfer of signals between two PINXs.

Note 1 - A connection between two PINXs can pass through zero or more Transit PINXs.

4.2.5 New connection : The connection established by ANF-PR and used to replace all or part of the old connection.

4.2.6 Old connection : The connection existing before ANF-PR is invoked.

4.2.7 Trombone connection : A connection which has both its ends in the same PINX but which involves at least one Transit PINX.

Copyright International Organization for Standardization
Provided by IHS under license with ISO
No reproduction or networking permitted without license from IHS Not for Resale

5 List of acronyms

ANF	Additional Network Feature
ANF-PR	ANF Path Replacement
CC	Call Control (functional entity)
CCA	Call Control Agent (functional entity)
CID	Call Identity (information flow service element)
FE	Functional Entity
ISDN	Integrated Services Digital Network
PINX	Private Integrated Services Network Exchange
PISN	Private Integrated Services Network
PRE	Path Replacement Error (information flow)
PRI	Path Replacement Invite (information flow)
PRP	Path Replacement Propose (information flow)
PRR	Path Replacement Re-use (information flow)
PRRR	PRR Result (information flow service element)
PRS	Path Replacement Setup (information flow)
PRSR	PRS Result (information flow service element)
RN	Rerouteing Number (information flow service element)
SDL	Specification and Description Language

6 ANF-PR stage 1 specification

6.1 Description

6.1.1 General description

ANF-PR is invoked by an ANF-PR user for an established call, allowing that call's connection through the PISN to be replaced by a new connection. The direction of the new connection may be decided by the ANF-PR user. If the new connection is required to satisfy certain criteria, ANF-PR should be used in conjunction with other supplementary services and/or ANFs. Annex A gives examples of the circumstances under which ANF-PR can be used and criteria which can govern the selection of the new connection.

6.1.2 Qualifications on applicability to telecommunication services

This additional network feature is applicable to all basic services defined in ISO/IEC 11574.

Note 2 - For certain teleservices or certain applications of certain basic bearer services the changeover from the old connection to the new connection can cause unacceptable disruption. See annex B.

6.2 Procedures

6.2.1 Provision/withdrawal

This ANF shall be PISN instigated.

Note 3 - Means can be provided for preventing the use of ANF-PR for applications where the changeover from the old connection to the new connection is likely to cause unacceptable disruption. See annex B.

6.2.2 Normal procedures

6.2.2.1 Activation/deactivation/registration/interrogation

The feature shall be permanently activated.

Copyright International Organization for Standardization
Provided by IHS under license with ISO
No reproduction or networking permitted without license from IHS Not for Resale

6.2.2.2 Invocation and operation

Invocation shall be on request from an ANF-PR user and shall be permitted only after a call has reached the active state. As an implementation option, the ANF-PR user may indicate the direction of the new connection.

On invocation an attempt shall be made to establish a new connection between the users. In the absence of specific criteria, the new connection shall be established using the routeing rules which apply to basic call establishment. If the new connection is successfully established it shall be used to replace the old connection, which shall be released.

Changeover from the old connection to the new connection should be done in a manner which minimises disruption to user information.

Note 4 - The means of specifying criteria and ensuring that the new connection satisfies those criteria can involve the use of another ANF or supplementary service, which can be either standardized or manufacturer specific.

In some circumstances it may be possible to re-use some elements of the old connection, so that only part of the old connection has to be replaced by a new connection, subject to the given criteria being achievable in that way.

6.2.3 Exceptional procedures

6.2.3.1 Activation/deactivation/registration/interrogation

Not applicable.

6.2.3.2 Invocation and operation

If it is not possible to establish a new connection, the call shall continue to use the old connection and any resources reserved for the new connection shall be released. There shall be no disruption to user information.

In the event of two ANF-users (at opposite ends of the connection) requesting the feature simultaneously, both requests shall be rejected.

Note 5 - An ANF-PR user can request the feature again later in the event of failure. In the case of failure due to simultaneous requests, care should be taken to avoid a repeat occurrence, e.g., by use of a random delay.

6.3 Interaction with other supplementary services and ANFs

Interactions with other supplementary services and ANFs for which PISN Standards were available at the time of publication of this International Standard are specified below.

6.3.1 Calling Line Identification Presentation (SS-CLIP)

No interaction.

6.3.2 Connected Line Identification Presentation (SS-COLP)

No interaction.

6.3.3 Calling/connected Line Identification Restriction (SS-CLIR)

No interaction.

6.3.4 Calling Name Identification Presentation (SS-CNIP)

No interaction.

6.3.5 Connected Name Identification Presentation (SS-CONP)

No interaction.

6.3.6 Calling/connected Name Identification Restriction (SS-CNIR)

No interaction.

6.3.7 Completion of Calls to Busy Subscriber (SS-CCBS)

No interaction

6.3.8 Completion of Calls on No Reply (SS-CCNR)

No interaction

6.3.9 Call Transfer (SS-CT)

If call transfer occurs while ANF-PR is in progress, ANF-PR shall be aborted.

--`,,```,,,,````-`-`,,`,,`,`,,`---
Copyright International Organization for Standardization
Provided by IHS under license with ISO
No reproduction or networking permitted without license from IHS Not for Resale

ANF-PR can apply to a call which has been transferred. The fact that transfer has occurred can be a reason for invoking ANF-PR (see annex A).

6.3.10 Call Forwarding Unconditional (SS-CFU)

ANF-PR can apply to a call which has been forwarded.

6.3.11 Call Forwarding Busy (SS-CFB)

ANF-PR can apply to a call which has been forwarded.

6.3.12 Call Forwarding No Reply (SS-CFNR)

ANF-PR can apply to a call which has been forwarded.

6.3.13 Call Deflection (SS-CD)

ANF-PR can apply to a call which has been deflected.

6.4 Interworking considerations

The requirements below apply to both incoming calls and outgoing calls.

It shall be possible to use ANF-PR on the PISN part of the connection. The new connection through the PISN shall replace the old connection through the PISN.

When interworking with another network which supports an equivalent feature, it may be possible to cooperate with the other network in order to replace the entire connection.

6.5 Overall SDL

Figure 1 contains the dynamic description of ANF-PR using the Specification and Description Language (SDL) defined in ITU-T Rec. Z.100. The SDL process represents the behaviour of the PISN in providing ANF-PR. Input signals from the left and output signals to the left represent primitives from and to the ANF-PR user.

Copyright International Organization for Standardization
Provided by IHS under license with ISO
No reproduction or networking permitted without license from IHS Not for Resale

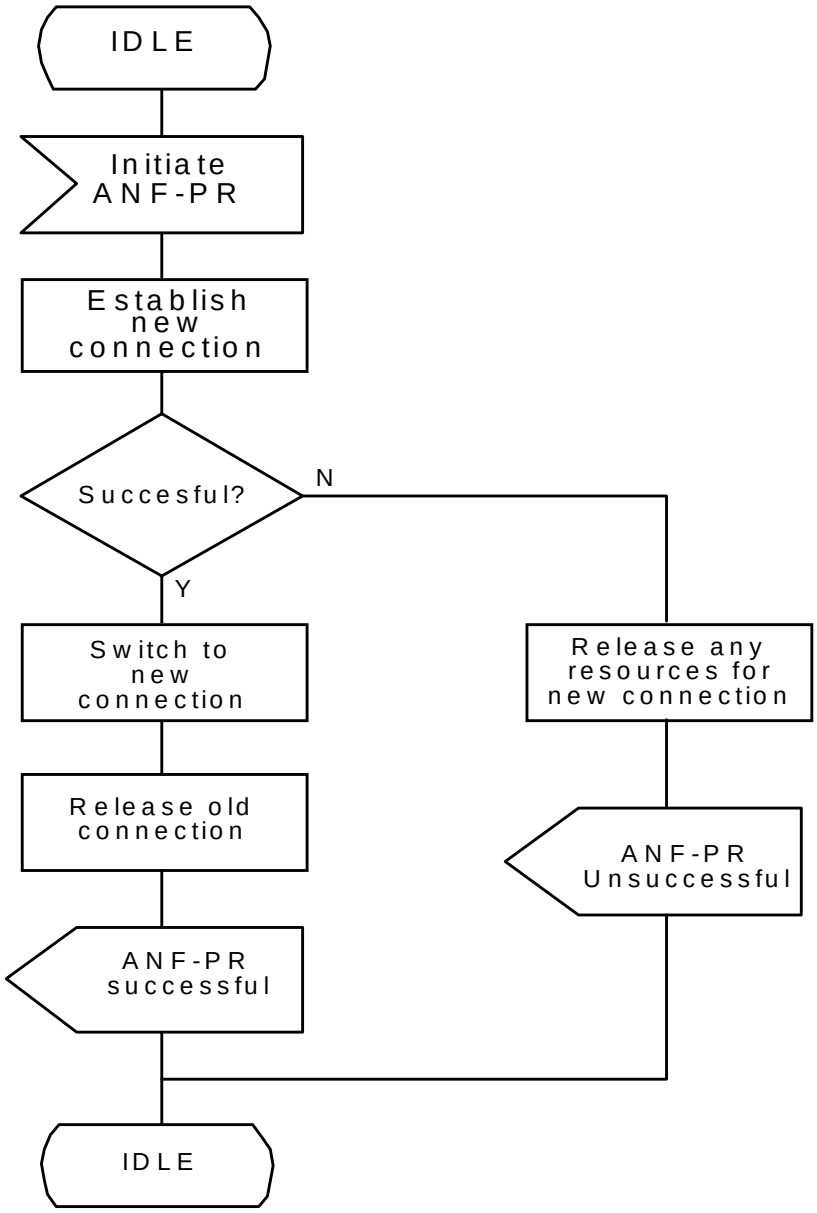

Figure 1 - ANF-PR, overall SDL

7 ANF-PR stage 2 specification - basic operation

Clause 7 contains the stage 2 for ANF-PR restricted to supporting the request for ANF-PR from end PINXs in a call. An optional extension to ANF-PR is documented in clause 9 which contains the stage 2 for ANF-PR whereby the request for ANF-PR can be done by any PINX in the connection.

7.1 Functional model

7.1.1 Functional model description

The functional model shall comprise the following functional entities (FEs):

FE1 Path Replacement Destination;

FE2 Path Replacement Source.

Copyright International Organization for Standardization
Provided by IHS under license with ISO
No reproduction or networking permitted without license from IHS Not for Resale

The following functional relationship shall exist between these FEs:

rx between FE1 and FE2

Figure 2 shows these FEs and this relationship.

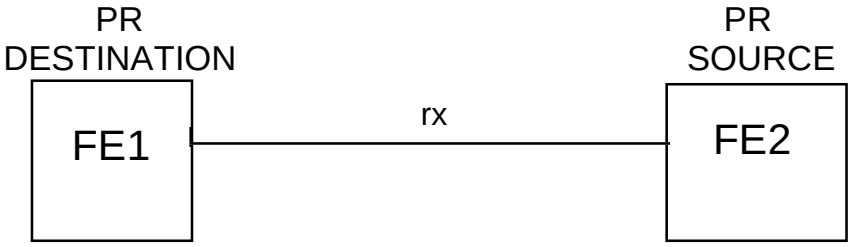

Figure 2 - Functional model for ANF-PR

7.1.2 Description of the functional entities

7.1.2.1 Path replacement destination functional entity, FE1

This functional entity receives a request from ANF-PR user to initiate ANF-PR and instructs FE2 to attempt to establish a new connection back towards FE1 If the new connection is successfully established, FE1 switches to the new connection and awaits the release of the old connection.

7.1.2.2 Path replacement source functional entity, FE2

On receipt of instruction from FE1 and if able to proceed with ANF-PR, this functional entity initiates the establishment of a new connection back towards FE1. If the new connection is successfully established, FE2 switches to the new connection and initiates release of the old connection.

7.1.3 Relationship of functional model to basic call functional model

During successful invocation of ANF-PR, the Transit CCs, if any, involved in the old connection shall be replaced by the Transit CCs, if any, involved in the new connection. The Originating and Terminating CCs shall remain.

For the case of a call originating and terminating within the PISN, ANF-PR functional entities shall be related to basic call functional entities as follows:

– FE1 shall be collocated with the Originating CC or the Terminating CC, depending on the location of the ANF-PR user;

– FE2 shall be collocated with the Terminating CC if FE1 is collocated with the Originating CC, or with the Originating CC if FE1 is collocated with the Terminating CC.

Figure 3 shows an example of the relationship between the model for ANF-PR and the model for the basic call. This example is used as the basis of the information flow sequences in 7.2.3.

Note 6 - The number of Transit CCs on the new connection can differ from the number on the old connection.

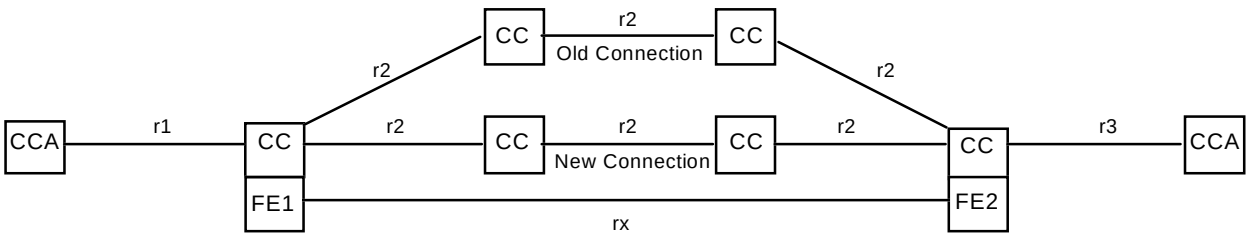

Figure 3 - Example relationship between models for ANF-PR and basic call

Copyright International Organization for Standardization
Provided by IHS under license with ISO
No reproduction or networking permitted without license from IHS Not for Resale

7.2 Information flows

7.2.1 Definition of information flows

In the tables listing the service elements in information flows, the column headed "Request" indicates which of these service elements are mandatory (M) and which are optional (O) in a request/indication information flow, and the column headed "Confirm" indicates which of these service elements are mandatory (M) and which are optional (O) in a response/confirmation information flow.

7.2.1.1 PRP (Path Replacement Propose)

PRP is an unconfirmed information flow across rx from FE1 to FE2 which proposes path replacement to FE2.

PRP request/indication is sent using the signalling path of the old connection.

Table 1 lists the service elements within the PRP information flow.

Table 1 - Content of PRP

Service element	Request
Rerouteing Number (RN)	M
Call Identity (CID)	M

Service element RN shall always be included in the PRP request/indication information flow at rx. It shall contain a number from one of the native numbering plans of the PISN (see ISO/IEC 11571). The number shall be suitable for use for routeing the new connection to the physical location where FE1 resides.

Service element CID shall always be included in the PRP request/indication information flow at rx. It shall contain a number which, in conjunction with the number in service element RN, identifies the particular FE1, and therefore the call on which ANF-PR is being invoked. This number need not have significance outside the physical location where FE1 resides.

7.2.1.2 PRS (Path Replacement Setup)

PRS is a confirmed information flow across rx from FE2 to FE1 which indicates to FE1 that the new connection being established is for the purpose of path replacement. The response indicates whether FE1 has successfully correlated the new connection with the old connection and is prepared to switch to the new connection.

PRS request/indication and PRS response/confirmation are sent using the signalling path of the new connection at the time of establishment of that connection.

Table 2 lists the service elements within the PRS information flow.

Table 2 - Content of PRS

Service element	Request	Confirm
Call Identity (CID)	M	-
PRS Result (PRSR)	-	M

Service element CID shall always be included in the PRS request/indication information flow at rx. It shall contain the value received in the corresponding service element of the PRP request/indication information flow.

Service element PRSR shall always be included in the PRS response/confirmation information flow at rx. It indicates whether the request was successful, and if not the reason for failure.

7.2.1.3 PRE (Path Replacement Error)

PRE is an unconfirmed information flow across rx from FE2 to FE1 which indicates to FE1 that path replacement has failed.

Table 3 lists the service element within the PRE information flow.

Copyright International Organization for Standardization
Provided by IHS under license with ISO
No reproduction or networking permitted without license from IHS Not for Resale

Table 3- Content of PRE

Service element	Request
Reason for failure	M

7.2.2 Relationship of information flows to basic call information flows

The PRS request/indication information flow shall be sent in conjunction with the basic call information flow Setup request/-indication for the new connection sent across basic call relationship r2. Service element Destination Number of information flow Setup request/indication shall contain the number provided in service element RN of information flow PRP request/-indication.

The PRS response/confirmation information flow shall be sent in conjunction with the basic call information flow Setup response/confirmation for the new connection across basic call relationship r2.

Failure to establish the new connection shall result in the initiation of its release using basic call information flow Release request/indication across relationship r2.

Successful switch over to the new connection shall result in the initiation of the release of the old connection using basic call information flow Release request/indication across relationship r2.

7.2.3 Examples of information flow sequences

A stage 3 standard for ANF-PR shall provide signalling procedures in support of the information flow sequences specified below. In addition, signalling procedures should be provided to cover other sequences arising from error situations, interactions with basic call, interactions with other supplementary services, different topologies, etc..

In the figures, ANF-PR information flows are represented by solid arrows and basic call information flows are represented by broken arrows. An ellipse embracing two information flows indicates that the two information flows occur simultaneously. Within a column representing an ANF-PR functional entity, the numbers refer to functional entity actions listed in 7.3. The following abbreviations are used:

req request

ind indication

res response

con confirmation

Copyright International Organization for Standardization
Provided by IHS under license with ISO
No reproduction or networking permitted without license from IHS Not for Resale

7.2.3.1 Normal operation of ANF-PR

Figure 4 shows the information flow sequence for normal operation of ANF-PR.

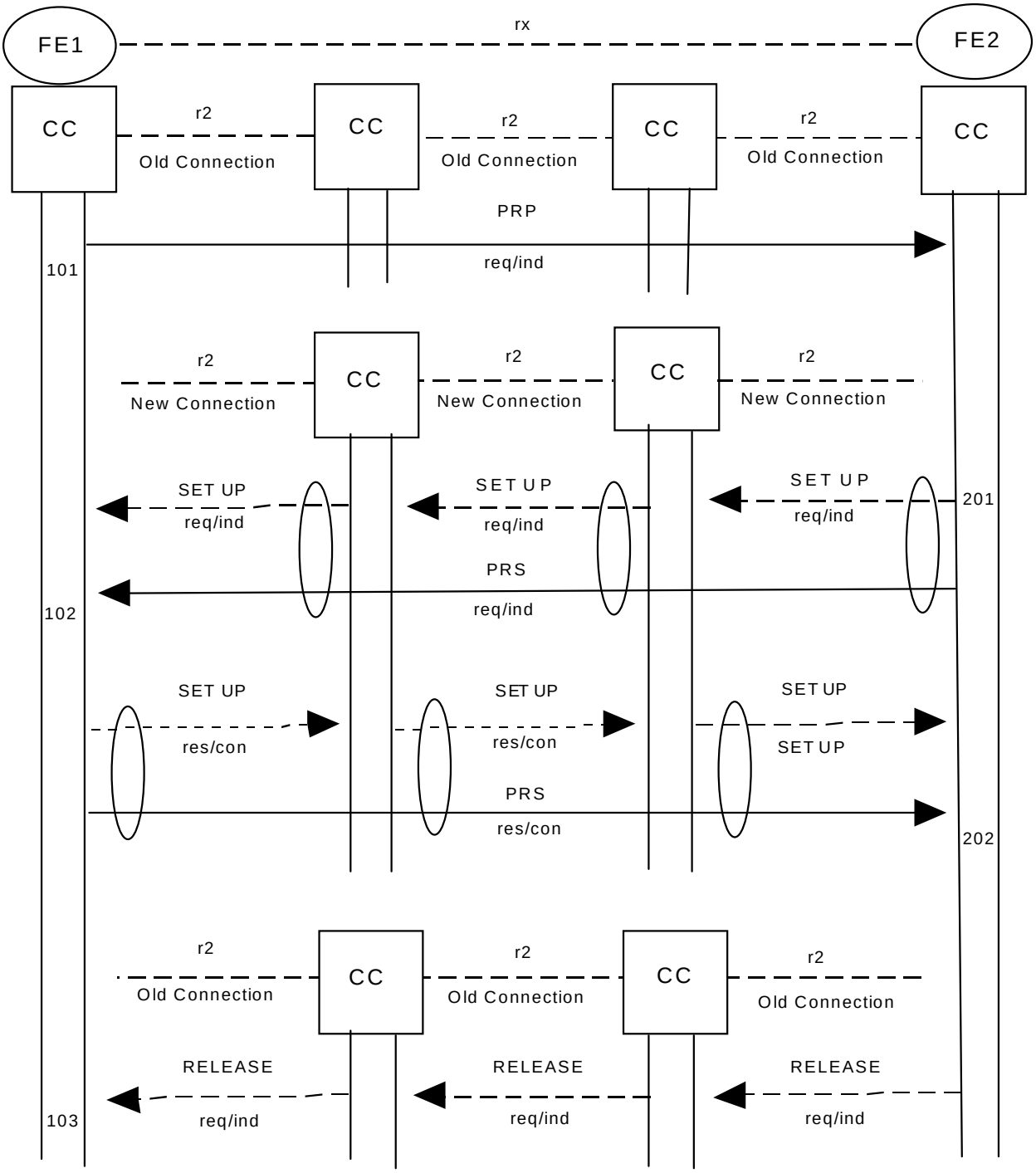

Note - For simplicity, basic call information flows Channel_Acknowledge request/indication and Release response/confirmation are not shown.

Figure 4 - Information flow sequence - normal operation of ANF-PR

Copyright International Organization for Standardization
Provided by IHS under license with ISO
No reproduction or networking permitted without license from IHS
Not for Resale

7.2.3.2 Failure to establish new connection

Figure 5 shows the information flow sequence when establishment of the new connection fails.

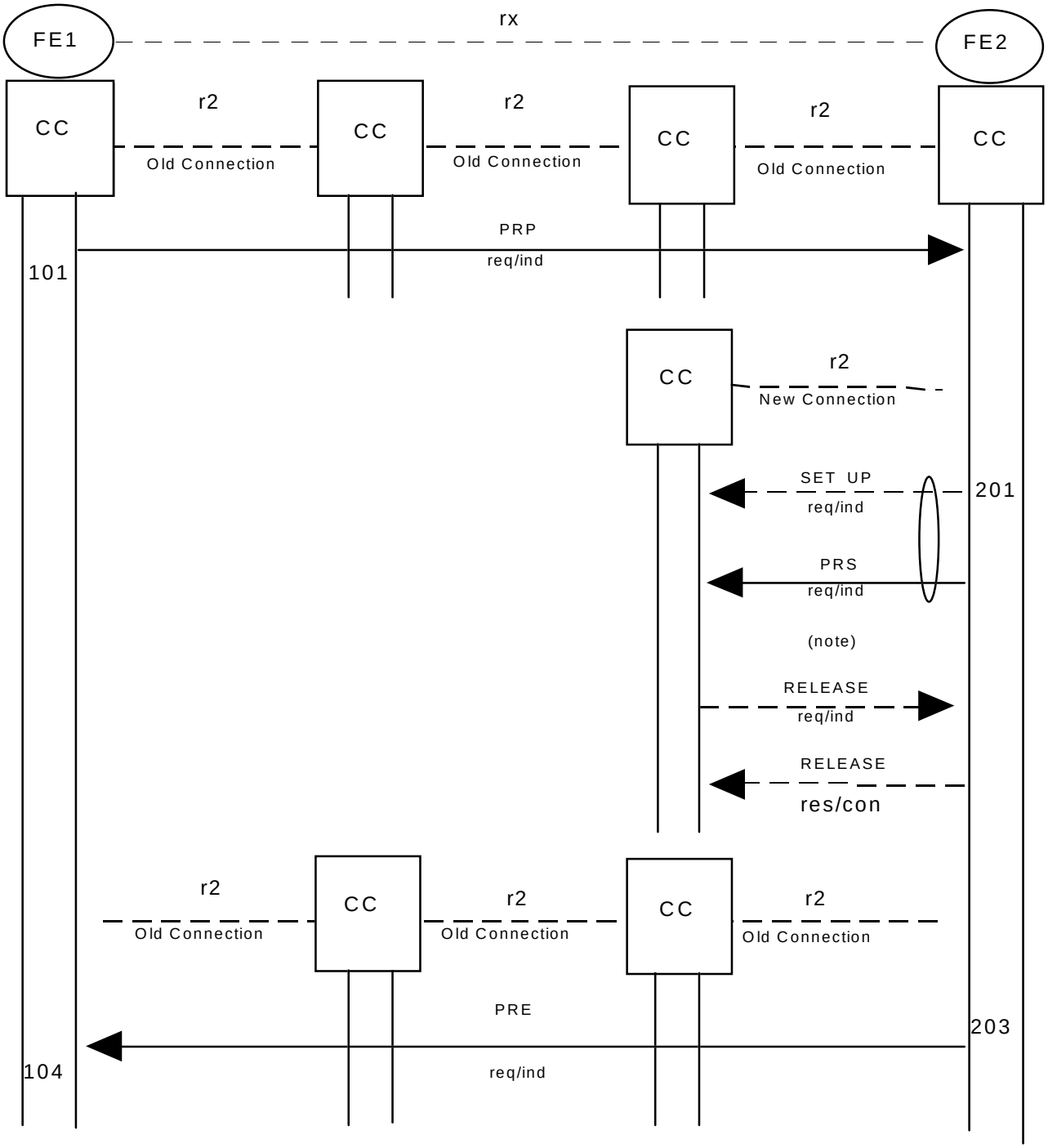

Note - Because of failure to establish the new connection, the PRS request/-indication will not reach FE1.

Figure 5 - Information flow sequence - failure to establish new connection

Copyright International Organization for Standardization
Provided by IHS under license with ISO
No reproduction or networking permitted without license from IHS
Not for Resale

7.3 Functional entity actions

The following FE actions shall occur at the points indicated in the figures of 7.2.3.

7.3.1 Functional entity actions of FE1

101 On receipt of a request from ANF-PR user, obtain Rerouteing Number and Call Identity, and include in PRP request/indication to FE2.

102 On receipt of PRS request/indication (in conjunction with basic call Setup request/indication): correlate new connection with old connection; switch over to the user information channel of the new connection; terminate the user information channel of the old connection in a suitable manner (pending its release); stimulate the sending of a basic call Setup response/confirmation; and return with it a PRS response/confirmation.

Note 7 - The method of terminating the old connection's user information channel is an implementation matter. See also annex B.

103 On receipt of an indication from the local CC that the old connection has been released, indicate successful completion of ANF-PR to the ANF-PR user.

104 On receipt of PRE request/indication, terminate ANF-PR and retain the old connection. Depending on the reason for failure, indicate to the ANF-PR user whether it is worthwhile invoking again later.

7.3.2 Functional entity actions of FE2

201 On receipt of PRP request/indication, check that ANF-PR is allowed and stimulate the establishment of a new connection. In conjunction with basic call SETUP request/indication, send PRS request/indication to FE1. Terminate the new connection's user information channel suitably.

Note 8 - The method of terminating the new connection's user information channel is an implementation matter. See also annex B.

202 On receipt of PRS response/confirmation indicating success (in conjunction with basic call Setup response/-confirmation), switch over to the new connection. Disconnect the old user information channel and initiate release of the old connection. Terminate ANF-PR.

203 On inability to accept the PRP request/indication, failure to establish the new connection, or receipt of PRS response/confirmation indicating failure (in conjunction with basic call Release request/indication), send PRE request/indication to FE1 and terminate ANF-PR.

7.4 Functional entity behaviour

The FE behaviours shown below are intended to illustrate typical FE behaviour in terms of information flows sent and received.

The behaviour of each FE is shown using the Specification and Description Language (SDL) defined in ITU-T Rec. Z.100 (1993).

Copyright International Organization for Standardization
Provided by IHS under license with ISO
No reproduction or networking permitted without license from IHS Not for Resale

7.4.1 Behaviour of FE1

Figure 6 shows the normal behaviour of FE1. Input signals from the right and output signals to the right represent information flows from and to FE2 and from the local basic call CC. Input signals from the left and output signals to the left represent primitives from and to the ANF-PR user.

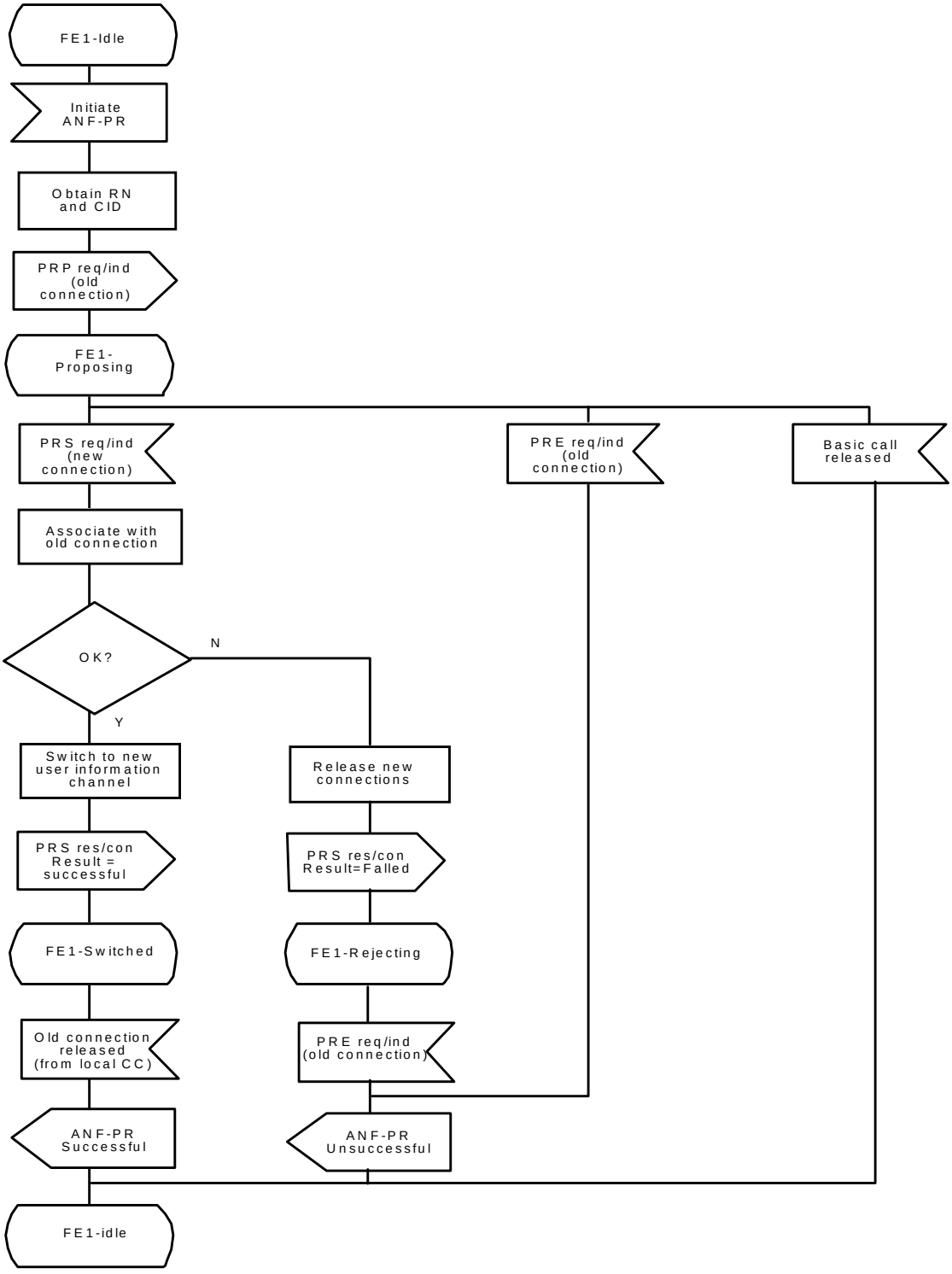

Figure 6 - ANF-PR, SDL for functional entity FE1

Copyright International Organization for Standardization
Provided by IHS under license with ISO
No reproduction or networking permitted without license from IHS
Not for Resale

7.4.2 Behaviour of FE2

Figure 7 shows the normal behaviour of FE2. Input signals from the left and output signals to the left represent information flows from and to FE1. Input signals from the right represent indications from the local CC.

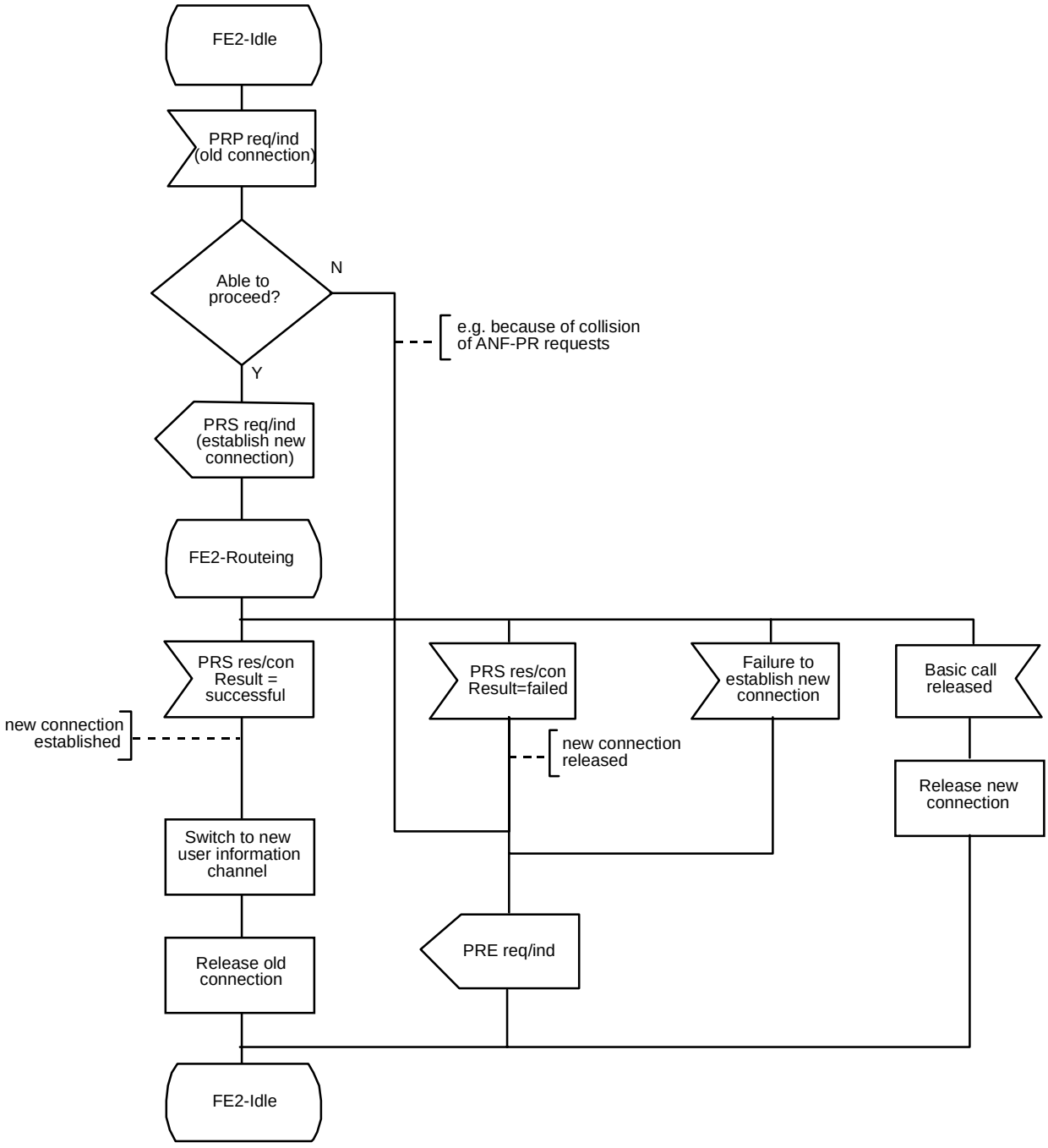

Figure 7 - ANF-PR, SDL for functional entity FE2

Copyright International Organization for Standardization
Provided by IHS under license with ISO
No reproduction or networking permitted without license from IHS Not for Resale

7.5 Allocation of functional entities to physical equipment

The allocations of FEs to physical equipment shown in table 4 shall apply.

FE1 shall be located at either End PINX, depending on where the need for invoking ANF-PR arises. This will depend on the application.

In the case of a trombone connection, the Originating PINX or Incoming Gateway PINX will be the same PINX as the Terminating PINX or Outgoing Gateway PINX. Therefore FE1 and FE2 will be collocated and the new connection and those information flows sent using the signalling path of the new connection will be intra-PINX. Information flow PRP request/-indication sent using the signalling path of the old connection will enable FE2 to determine that FE1 is collocated.

Table 4 - Scenarios for the allocation of FEs to physical equipment

	FE1	FE2
Scenario 1	Originating PINX	Terminating PINX
Scenario 2	Originating PINX	Outgoing Gateway PINX (note)
Scenario 3	Incoming Gateway PINX (note)	Terminating PINX
Scenario 4	Incoming Gateway PINX (note)	Outgoing Gateway PINX (note)
Scenario 5	Terminating PINX	Originating PINX
Scenario 6	Terminating PINX	Incoming Gateway PINX (note)
Scenario 7	Outgoing Gateway PINX (note)	Originating PINX
Scenario 8	Outgoing Gateway PINX (note)	Incoming Gateway PINX (note)

Note - When interworking with another network which supports an equivalent feature, FE1 or FE2 may be located in that other network, thereby permitting replacement of the entire connection.

7.6 Interworking considerations

When interworking with another network which does not support an equivalent feature, the FEs for ANF-PR shall be located within PINXs, in accordance with 7.5. All information flows will be internal to the PISN.

When interworking with another network which supports an equivalent feature, the two networks may cooperate in the operation of ANF-PR. In this case, either FE1 or FE2 will be located in the other network and the information flows within the PISN will map on to equivalent information flows in the other network.

8 ANF-PR stage 2 specification - re-use of connection elements

The enhanced functional breakdown of the feature as specified in this clause allows the possibility of re-using some elements of the old connection, so that only part of the old connection has to be replaced by a new connection.

8.1 Functional model

8.1.1 Functional model description

The functional model shall be as specified in 7.1.1 for basic operation, but with the addition of one or more instances of FE "Path Replacement Re-use" (FE3). The functionality of FE2 is enhanced. Additional relationship rz shall exist between FE1 and the adjacent instance of FE3. Additional relationship ry shall exist between adjacent instances of FE3 and between FE2 and the adjacent instance of FE3. See figure 8.

Copyright International Organization for Standardization
Provided by IHS under license with ISO
No reproduction or networking permitted without license from IHS Not for Resale

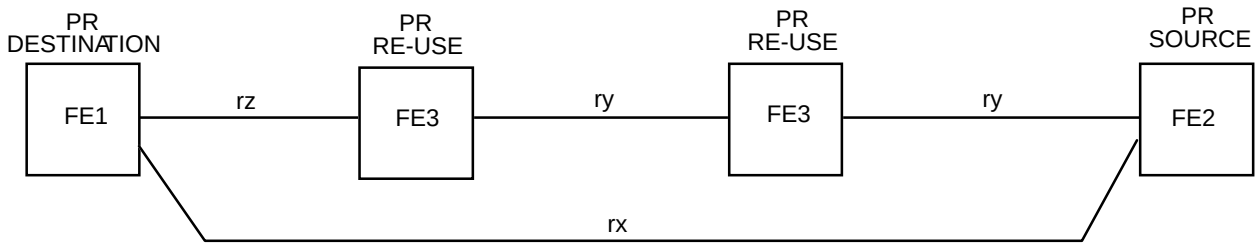

Figure 8 - Functional model for enhanced operation of ANF-PR

8.1.2 Description of the functional entities

8.1.2.1 Path replacement destination functional entity, FE1

7.1.2.1 shall apply.

8.1.2.2 Path replacement source functional entity, FE2

The functions of FE2 are as specified in 7.1.2.2 with the following enhancement.

FE2 determines whether the existing element of the old connection as far as the next CC can be re-used, and if so instructs an instance of FE3 located at the next CC to establish and switch to the new connection.

8.1.2.3 Path replacement re-use functional entity, FE3

On receipt of instruction from FE2 or an intervening FE3, this functional entity initiates the establishment of a new connection back towards FE1. If the new connection is successfully established, FE3 connects the re-used connection element from FE2 to the new connection and initiates release of the unwanted parts of the old connection.

FE3 determines whether the existing element of the old connection as far as the next CC can be re-used, and if so instructs a further instance of FE3 located at the next CC to establish and switch to the new connection.

8.1.3 Relationship of functional model to basic call functional model

7.1.3 shall apply with the following modifications.

During successful invocation of ANF-PR with re-use of some or all of the elements of the old connection, the Transit CCs in that part of the old connection which is not re-used are replaced by the Transit CCs, if any, involved in the new connection. Other Transit CCs, including the one from which the new connection starts, are retained, and each has a collocated FE3.

Figure 9 shows an example of the relationship between the model for ANF-PR and the model for the basic call. In this example elements of the old connection are re-used from FE2 as far as the first Transit CC. This example is used as the basis of the information flow sequences in 8.2.3.

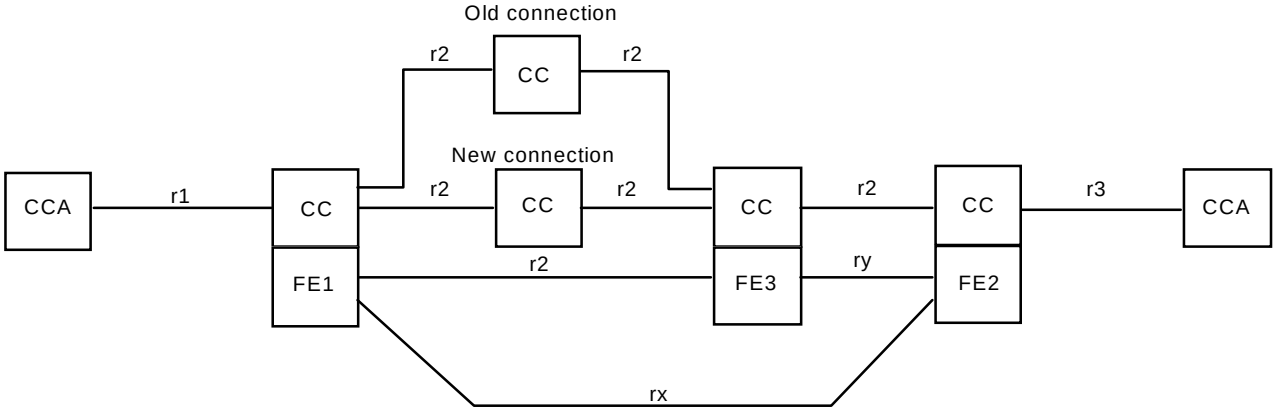

Figure 9 - Example relationship between models for ANF-PR and basic call - re-use of part of the old connection

--`,,```,,,,````-`-`,,`,,`,`,,`---
Copyright International Organization for Standardization
Provided by IHS under license with ISO
No reproduction or networking permitted without license from IHS
Not for Resale

8.2 Information flows

8.2.1 Definition of information flows

8.2.1.1 PRP (Path Replacement Propose)

7.2.1.1 shall apply.

8.2.1.2 PRS (Path Replacement Setup)

7.2.1.2 shall apply, with the exception that information flow PRS shall occur across relationship rz instead of rx.

8.2.1.3 PRE (Path Replacement Error)

7.2.1.4 shall apply.

8.2.1.4 PRR (Path Replacement Re-use)

PRR is a confirmed information flow across ry from FE2 or FE3 to the next FE3. It instructs the next FE3 to establish and switch to a new connection, elements of the old connection as far as that next FE3 being re-used. The response indicates whether a new connection has been successfully established and switched to.

PRR request/indication and PRR response/confirmation are sent using the signalling path of the old connection.

Table 5 lists the service elements within the PRR information flow. The column headed "Request" indicates which of these service elements are mandatory (M) and which are optional (O) in a PRR request/indication information flow. The column headed "Confirm" indicates which of these service elements are mandatory (M) and which are optional (O) in a PRR response/confirmation information flow.

Table 5 - Content of PRR

Service element	Request	Confirm
Rerouteing Number (RN)	M	-
Call Identity (CID)	M	-
PRR Result (PRRR)	-	M

Service element RN shall always be included in the PRR request/indication information flow at ry. It shall contain the number sent to FE2 in service element RN of the PRP request/indication information flow.

Service element CID shall always be included in the PRR request/indication information flow at ry. It shall contain the value received in the corresponding service element of the PRP request/indication information flow.

Service element PRRR shall always be included in the PRR response/confirmation information flow at ry. It indicates whether the request was successful, and if not the reason for failure.

8.2.2 Relationship of information flows to basic call information flows

7.2.2 shall apply.

8.2.3 Examples of information flow sequences

Below are examples of typical sequences of information flows. In addition to providing signalling procedures in support of these sequences, a stage 3 standard shall also cover other sequences arising from error situations, interactions with basic call, interactions with other supplementary services, different topologies, etc..

In the figures, ANF-PR information flows are represented by solid arrows and basic call information flows are represented by broken arrows. An ellipse embracing two information flows indicates that the two information flows occur simultaneously. Within a column representing an ANF-PR functional entity, the numbers refer to functional entity actions listed in 8.3.

8.2.3.1 Normal operation of ANF-PR with re-use of part of old connection

Figure 10 shows the information flow sequence for normal operation of ANF-PR when that part of the old connection up to the first Transit CC is re-used. The new connection starts at the first Transit CC, at which an instance of FE3 is located.

--`,,```,,,,````-`-`,,`,,`,`,,`---
Copyright International Organization for Standardization
Provided by IHS under license with ISO
No reproduction or networking permitted without license from IHS Not for Resale

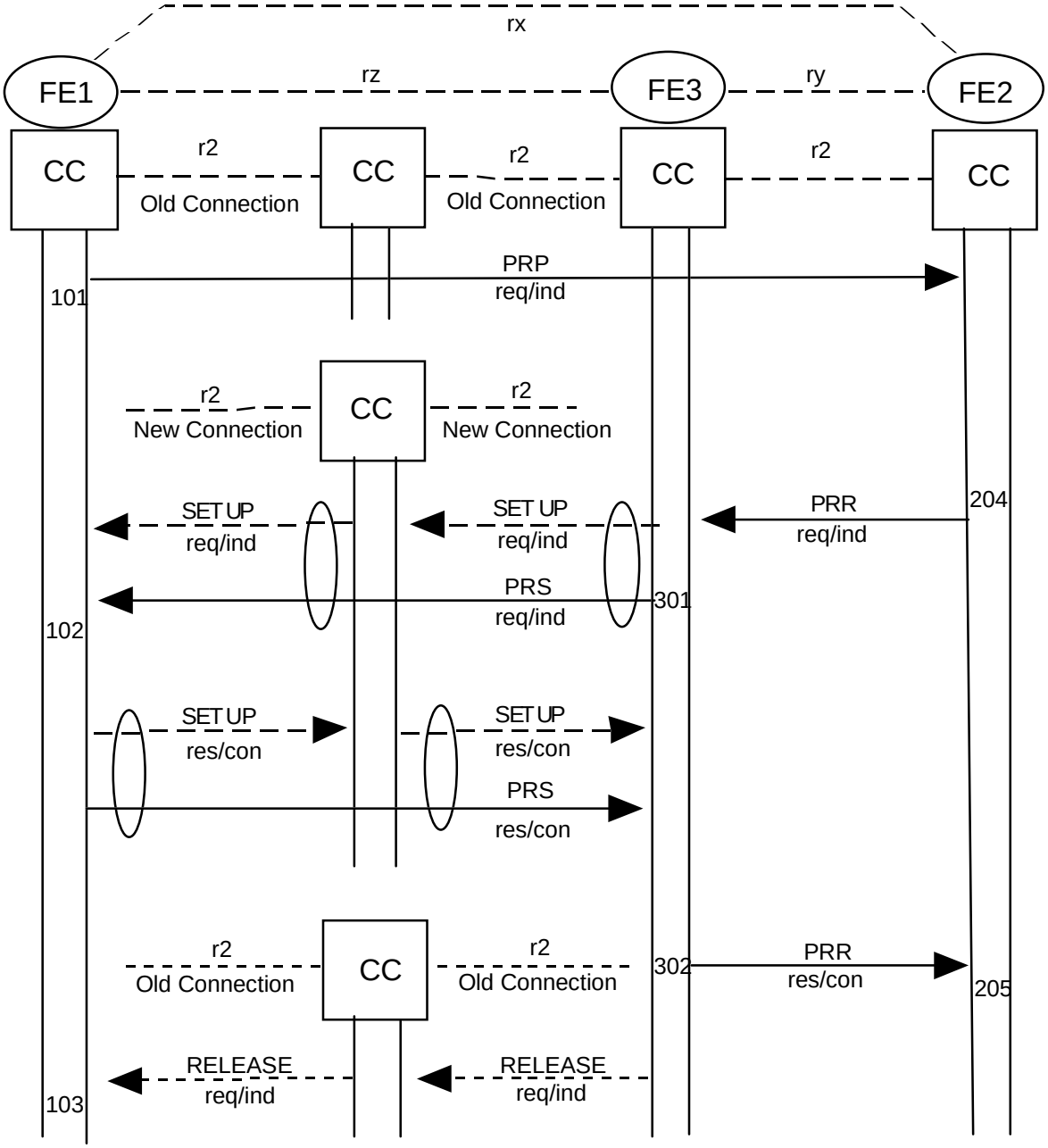

Note - For simplicity, basic call information flows Channel_Acknowledge request/indication and Release response/confirmation are not shown.

Figure 10 - Information flow sequence - normal operation of ANF-PR with re-use of part of old connection

Copyright International Organization for Standardization
Provided by IHS under license with ISO
No reproduction or networking permitted without license from IHS
Not for Resale

8.2.3.2 Failure to establish new connection to replace part of old connection

Figure 11 shows the information flow sequence when establishment of a new connection to replace part of the old connection fails. The new connection attempt is from the first Transit CC, at which an instance of FE3 is located.

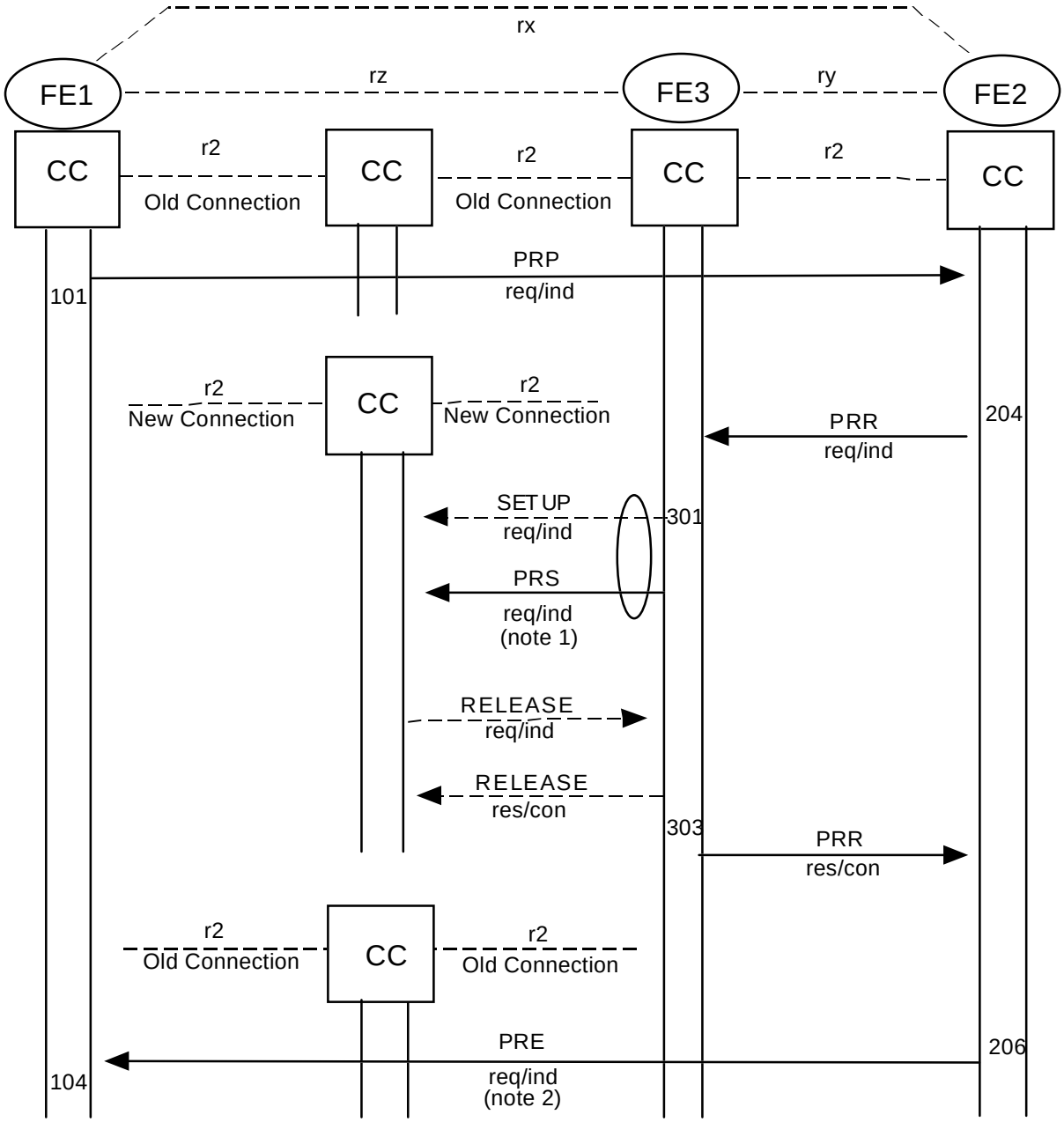

Note 1 - Because of failure to establish the new connection, the PRS request/indication will not reach FE1.

Note 2 - Because of failure to establish the new connection, PRE request/indication is sent . Alternatively FE2 may revert to basic operation and attempt to establish a new connection without re-use of part of the old connection.

Figure 11 - Information flow sequence - failure to establish new connection to replace part of old connection

Copyright International Organization for Standardization
Provided by IHS under license with ISO
No reproduction or networking permitted without license from IHS
Not for Resale

8.2.3.3 Retention of all of the old connection

Figure 12 shows the information flow sequence for operation of ANF-PR when an attempt is made to re-use the old connection as far as the CC where FE1 is located. This can arise only if the old connection already meets the criteria for the new connection. The old connection is retained and ANF-PR is deemed to have terminated successfully. An FE3 occurs at each Transit CC and at the CC where FE1 is located.

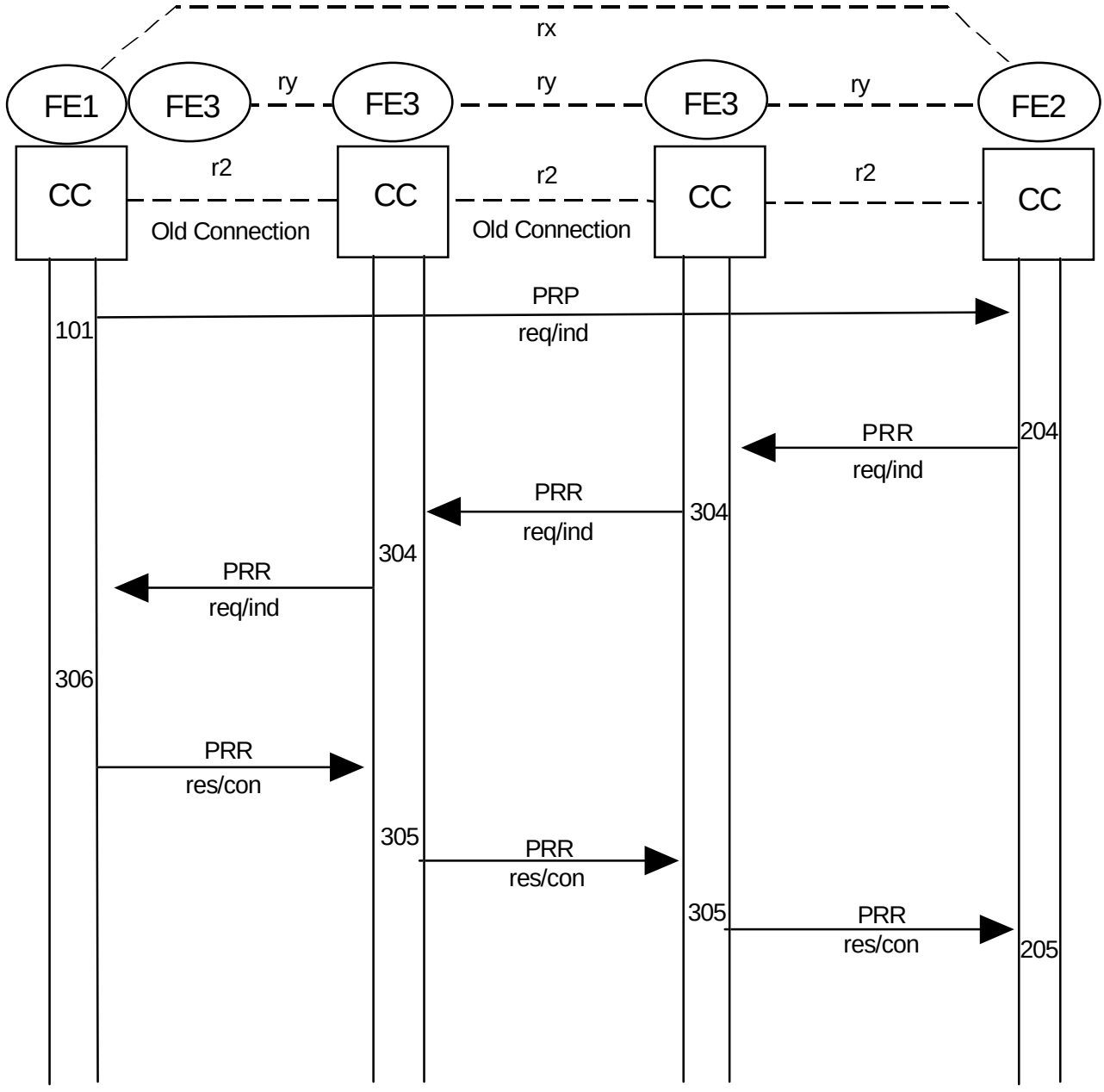

Figure 12 - Information flow sequence - retention of all of the old connection

Copyright International Organization for Standardization
Provided by IHS under license with ISO
No reproduction or networking permitted without license from IHS Not for Resale

8.3 Functional entity actions

The following FE actions shall occur at the points indicated in the figures of 8.2.3.

8.3.1 Functional entity actions of FE1

7.3.1 shall apply.

8.3.2 Functional entity actions of FE2

7.3.2 shall apply. In addition, the following actions shall apply.

204 On receipt of PRP request/indication, check that ANF-PR is allowed and discover that the old connection can be re-used as far as the next CC. Send PRR request/indication to FE3.

205 On receipt of PRR response/confirmation indicating success, terminate ANF-PR.

206 On inability to accept the PRP request/indication or receipt of PRR response/confirmation indicating failure, send PRE request/indication to FE1 and terminate ANF-PR. Alternatively, on receipt of PRR response/confirmation indicating failure, attempt path replacement without re-use of elements of the old connection (action 201).

8.3.3 Functional entity actions of FE3

301 On receipt of PRR request/indication from FE2 or the previous FE3, check that ANF-PR is allowed and initiate the establishment of a new connection. In conjunction with basic call SETUP request/indication, send PRS request/indication to FE1. Terminate the new connection's user information channel suitably.

Note 9 - The method of terminating the new connection's user information channel is an implementation matter. See also annex B.

302 On receipt of PRS response/confirmation indicating success (in conjunction with basic call Setup response/confirmation), switch over to the new connection and send a PRR response/confirmation to FE2 or the previous FE3. Initiate release of the unwanted part of the old connection and terminate ANF-PR.

303 On inability to accept the PRR request/indication, failure to establish the new connection, or receipt of PRS response/confirmation indicating failure (in conjunction with basic call Release request/indication), send PRR response/confirmation indicating failure to FE2 or the previous FE3 and terminate ANF-PR.

304 On receipt of PRR request/indication from FE2 or the previous FE3, check that ANF-PR is allowed and discover that the old connection can be re-used as far as the next CC. Send PRR request/indication to the next FE3.

305 On receipt of PRR response/confirmation from the next FE3, send PRR response/confirmation indicating success to FE2 or the previous FE3

306 On receipt of a PRR request/indication from FE2 or a previous FE3, if this FE3 is collocated with FE1 (i.e., the old connection has been found to satisfy the given criteria) send a PRR response/confirmation indicating success to FE2 or the previous FE3 and terminate ANF-PR.

8.4 Functional entity behaviour

The FE behaviours shown below are intended to illustrate typical FE behaviour in terms of information flows sent and received.

The behaviour of each FE is shown using the Specification and Description Language (SDL) defined in ITU-T Rec. Z.100 (1993).

8.4.1 Behaviour of FE1

7.4.1 is applicable.

Copyright International Organization for Standardization
Provided by IHS under license with ISO
No reproduction or networking permitted without license from IHS Not for Resale

8.4.2 Enhanced behaviour of FE2

Figure 13 shows the enhanced behaviour of FE2. Input signals from the left and output signals to the left represent information flows from and to FE3 (where stated) and FE1 (otherwise). Input signals from the right represent indications from the local CC.

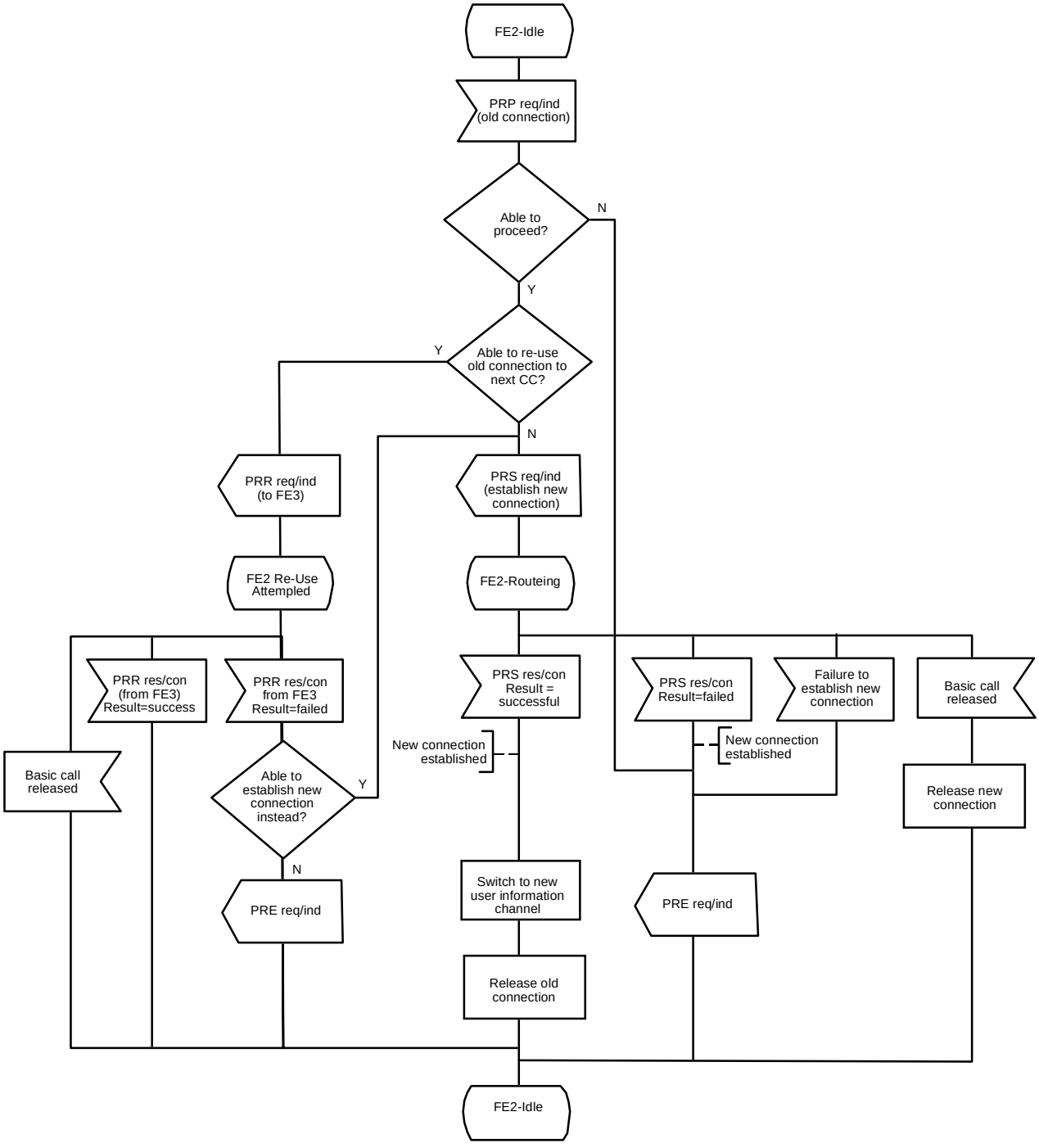

Figure 13 - ANF-PR, SDL for enhanced functional entity FE2

Copyright International Organization for Standardization
Provided by IHS under license with ISO
No reproduction or networking permitted without license from IHS Not for Resale

8.4.3 Behaviour of FE3

Figure 14 shows the behaviour of FE3. Input signals from the left and output signals to the left represent information flows from and to the next FE3 (where stated) and FE1 (otherwise). Input signals from the right and output signals to the right represent information flows from and to FE2 or the previous FE3 and indications from the local CC.

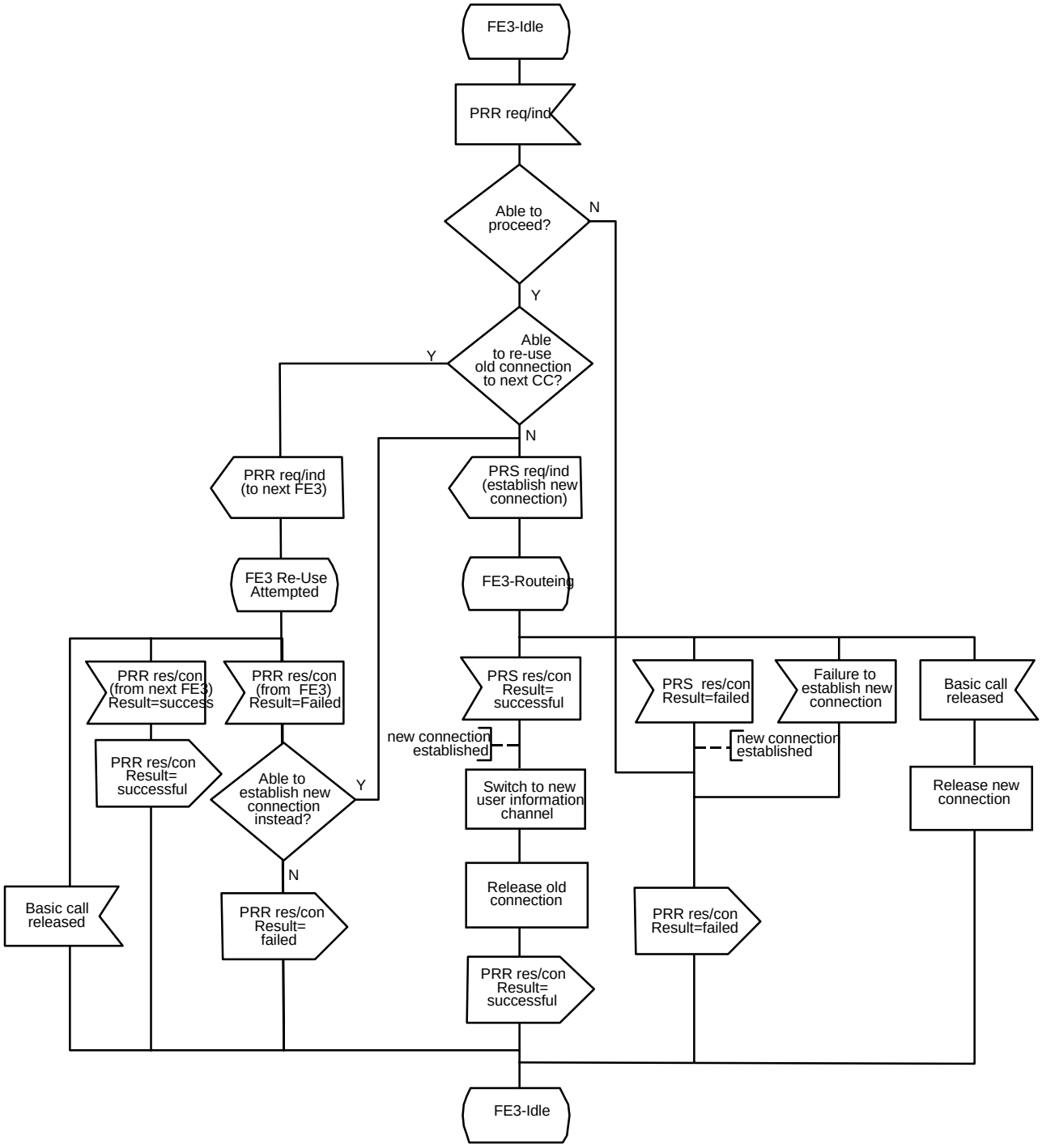

Figure 14 - ANF-PR, SDL for functional entity FE3

Copyright International Organization for Standardization
Provided by IHS under license with ISO
No reproduction or networking permitted without license from IHS
Not for Resale

8.5 Allocation of functional entities to physical equipment

7.5 shall apply with the following enhancement.

An instance of FE3 shall be located at the Transit PINX at which the new connection starts and at each Transit PINX between that PINX and FE2.

8.6 Interworking considerations

7.6 shall apply. If FE2 is located in another network which supports the re-use of elements of the old connection, an FE3 can be located at the Gateway PINX.

9 ANF-PR stage 2 specification - basic operation with inviting entity

Clause 9 contains an optional extension of the stage 2 for ANF-PR in which the request for ANF-PR can be from any PINX in the connection.

9.1 Functional model

9.1.1 Functional model description

The functional model shall comprise the following functional entities:

FE1´ Path Replacement Destination;

FE2 Path Replacement Source.

FE4 Path Replacement Invitation.

The following functional relationship shall exist between these FEs:

rx between FE1' and FE2

rw between FE4 and FE1´.

Figure 15 shows these FEs and this relationship.

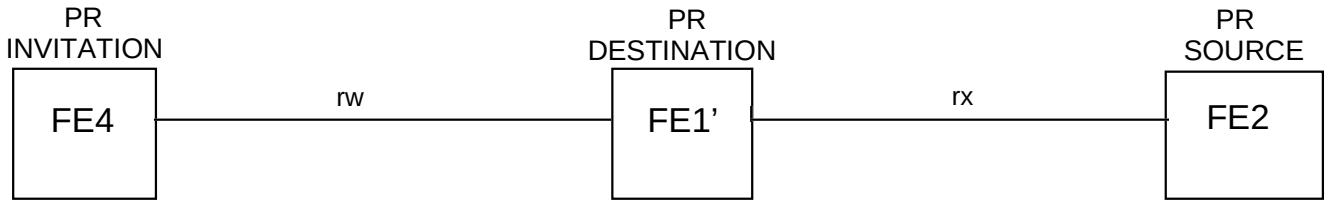

Figure 15 - Functional model for ANF-PR

9.1.2 Description of the functional entities

9.1.2.1 Path replacement destination functional entity, FE1´

7.1.2.1 shall apply with the exception that FE1´ receives the request from FE4 instead of the ANF-PR user.

9.1.2.2 Path replacement source functional entity, FE2

7.1.2.2 shall apply.

9.1.2.3 Path replacement invitation functional entity, FE4

This functional entity receives a request from the ANF-PR user and invites FE1´ to initiate ANF-PR.

9.1.3 Relationship of functional model to basic call functional model

During successful invocation of ANF-PR, the Transit CCs, if any, involved in the old connection shall be replaced by the Transit CCs, if any, involved in the new connection. The Originating and Terminating CCs shall remain.

For the case of a call originating and terminating within the PISN, ANF-PR functional entities shall be related to basic call functional entities as follows:

– FE1´ shall be collocated with the Originating CC or the Terminating CC.

Copyright International Organization for Standardization
Provided by IHS under license with ISO
No reproduction or networking permitted without license from IHS Not for Resale

– FE2 shall be collocated with the Terminating CC if FE1´ is collocated with the Originating CC, or with the Originating CC if FE1´ is collocated with the Terminating CC.

– FE4 may be collocated with any CC in the connection.

Figure 16 shows an example of the relationship between the model for ANF-PR and the model for the basic call. This example is used as the basis of the information flow sequences in 9.2.3.

Note 10 - The number of Transit CCs on the new connection can differ from the number on the old connection.

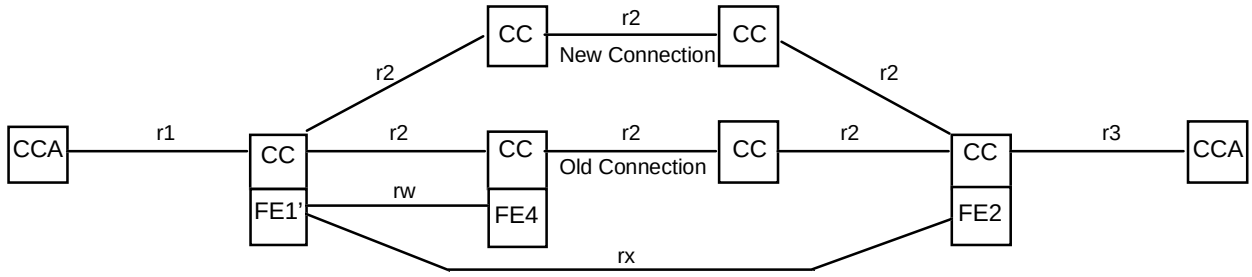

Figure 16 - Example relationship between models for ANF-PR and basic call

9.2 Information flows

9.2.1 Definition of information flows

7.2.1 shall apply.

9.2.1.1 PRP (Path Replacement Propose)

7.2.1.1 shall apply.

9.2.1.2 PRS (Path Replacement Setup)

7.2.1.2 shall apply.

9.2.1.3 PRI (Path Replacement Invite)

PRI request/indication is an unconfirmed information flow across rw from FE4 to FE1´ which indicates that ANF-PR shall be invoked at FE1´. PRI is sent towards FE1´ using the signalling path of the existing connection.

Table 6 lists the service element within the PRI information flow.

Table 6 - Content of PRI

Service element	Request
Call Identity (CID)	M

9.2.1.4 PRE (Path Replacement Error)

7.2.1.3 shall apply.

9.2.1.5 PRIF (Path Replacement Invite Failure)

PRIF is an unconfirmed and optional information flow across rw from FE1´ to FE4 which indicates to FE4 that path replacement has failed.

Table 7 lists the service element within the PRIF information flow.

Copyright International Organization for Standardization
Provided by IHS under license with ISO
No reproduction or networking permitted without license from IHS Not for Resale

Table 7 - Content of PRIF

Service element	Request
Reason for failure	M

9.2.2 Relationship of information flows to basic call information flows

7.2.2 shall apply. The PRI information flow is not related to any basic call information flow.

9.2.3 Examples of information flow sequences

7.2.3 shall apply.

--`,,```,,,,````-`-`,,`,,`,`,,`---

Copyright International Organization for Standardization
Provided by IHS under license with ISO
No reproduction or networking permitted without license from IHS Not for Resale

9.2.3.1 Normal operation of ANF-PR

Figure 17 shows the information flow sequence for normal operation of ANF-PR.

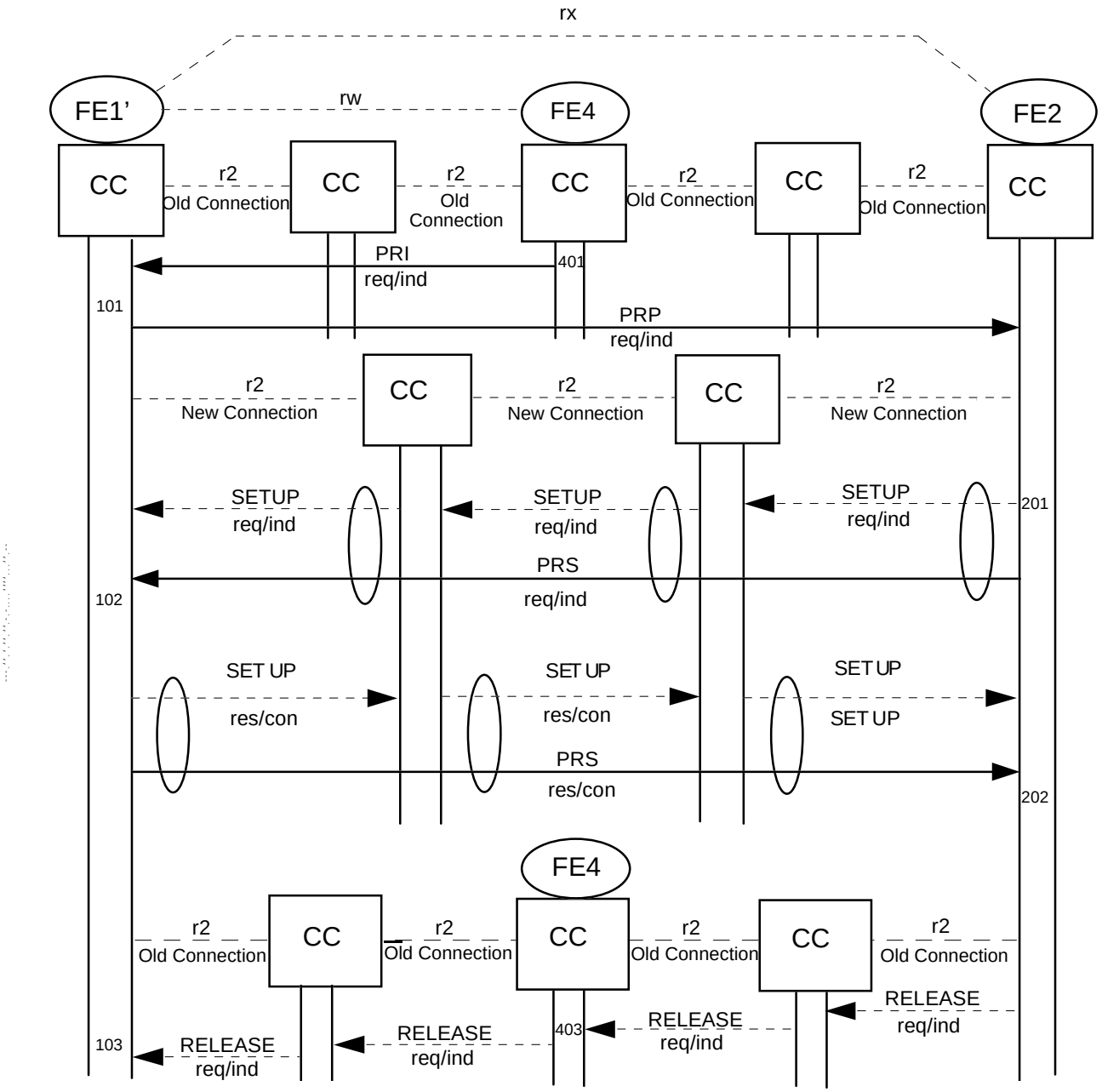

Note - For simplicity, basic call information flows Channel_Acknowledge request/indication and Release response/confirmation are not shown.

Figure 17 - Information flow sequence - normal operation of ANF-PR

Copyright International Organization for Standardization
Provided by IHS under license with ISO
No reproduction or networking permitted without license from IHS
Not for Resale

9.2.3.2 Failure to establish new connection - immediate rejection

Figure 18 shows the information flow sequence for immediate rejection of ANF-PR.

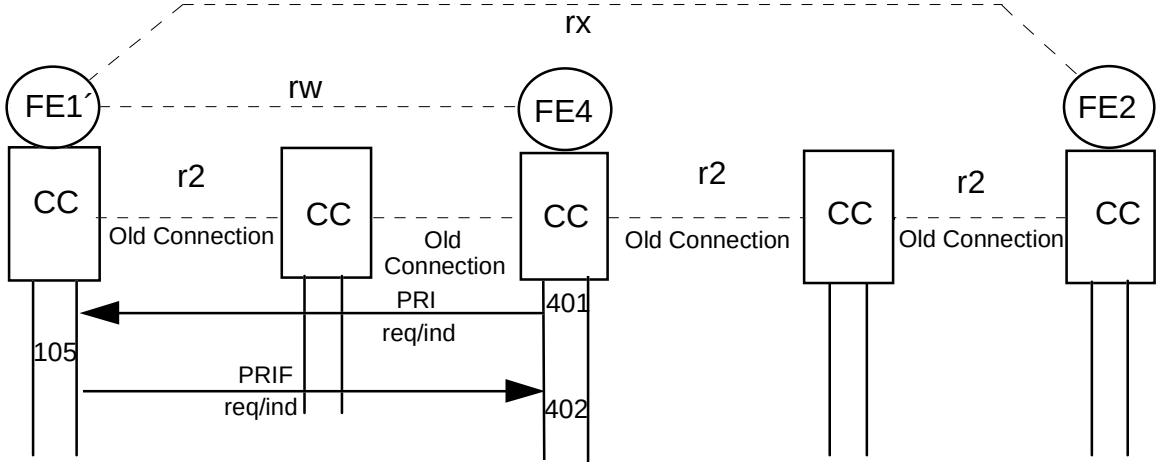

Figure 18 - Information flow sequence - failure to establish new connection

Copyright International Organization for Standardization
Provided by IHS under license with ISO
No reproduction or networking permitted without license from IHS Not for Resale

9.2.3.3 Failure to establish new connection - during ANF-PR execution

Figure 19 shows the information flow sequence when establishment of the new connection fails.

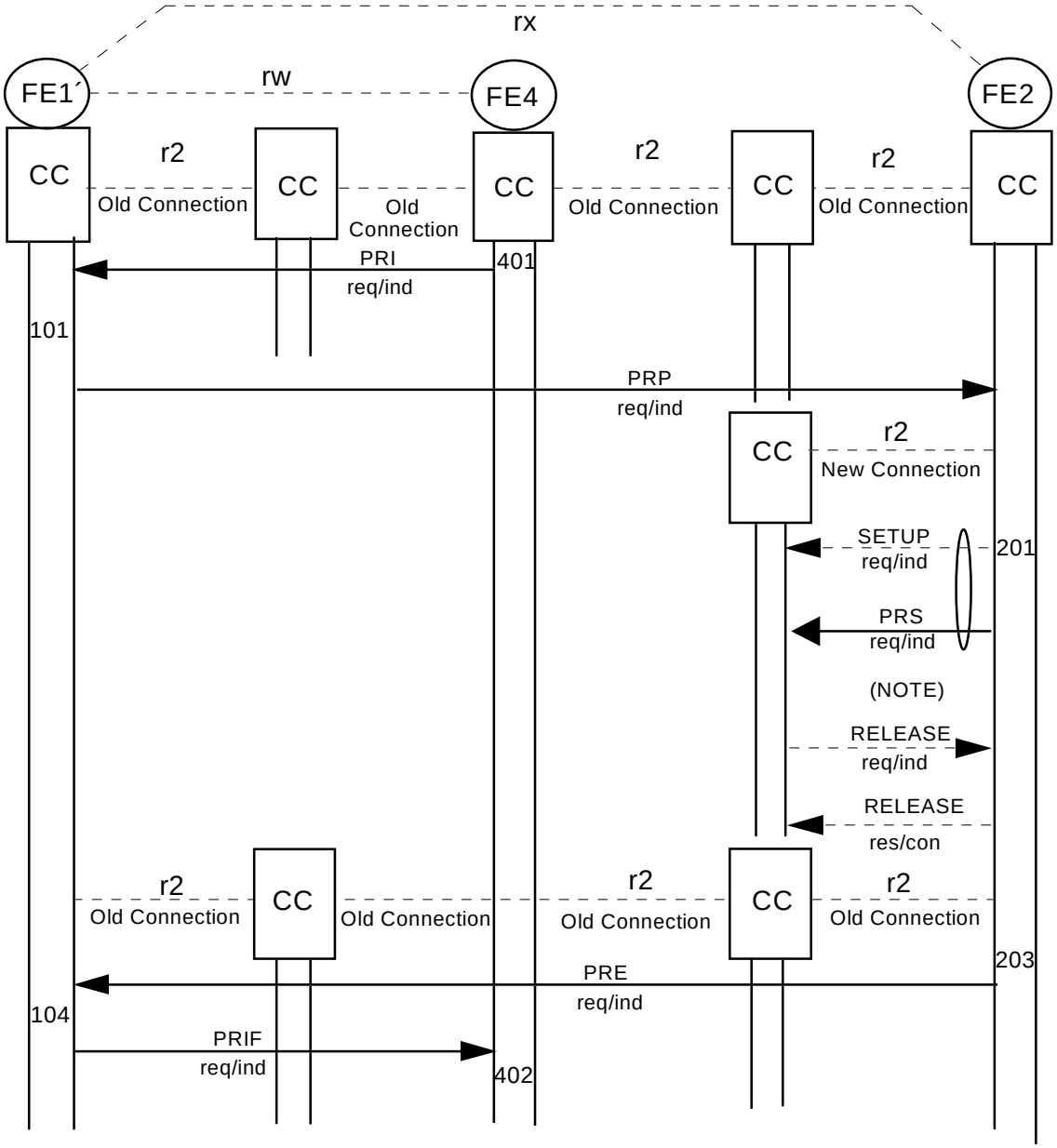

Note - Because of failure to establish the new connection, the PRS request/-indication will not reach FE1´.

Figure 19 - Information flow sequence - failure to establish new connection

Copyright International Organization for Standardization
Provided by IHS under license with ISO
No reproduction or networking permitted without license from IHS
Not for Resale

9.3 Functional entity actions

The following FE actions shall occur at the points indicated in the figures of 9.2.3.

9.3.1 Functional entity actions of FE1´

101 On receipt of a PRI request/-indication from FE4, obtain Rerouteing Number and Call Identity, and include in PRP request/indication to FE2.

102 Procedure 102 in 7.3.1 and Note 7 shall apply.

103 On receipt of an indication from the local CC that the old connection has been released, treat ANF-PR as successfully completed.

104 On receipt of PRE request/indication, terminate ANF-PR and retain the old connection. Depending on the reason for failure optionally inform FE4 in a PRIF request/indication.

105 If FE1´ does not accept the invitation it may optionally inform FE4 about the reason by sending a PRIF request/-indication.

Note 11 - One reason for rejection may be that ANF-PR is in progress already.

9.3.2 Functional entity actions of FE2

7.3.2 shall apply.

9.3.3 Functional entity actions of FE4

401 On receipt of a request from the ANF-PR user send the PRI request/-indication to FE1´.

402 On receipt of a PRIF request/indication, terminate ANF-PR. Depending on the reason for failure, indicate to the ANF-PR user whether it is worthwhile invoking again later.

403 On receipt of an indication from the local CC that the old connection has been released, indicate successful completion of ANF-PR to the ANF-PR user.

9.4 Functional entity behaviour

The FE behaviours shown below are intended to illustrate typical FE behaviour in terms of information flows sent and received.

The behaviour of each FE is shown using the Specification and Description Language (SDL) defined in ITU-T Rec. Z.100 (1993).

Copyright International Organization for Standardization
Provided by IHS under license with ISO
No reproduction or networking permitted without license from IHS Not for Resale

9.4.1 Behaviour of FE1´

Figure 20 shows the normal behaviour of FE1´. Input signals from the right and output signals to the right represent information flows from and to FE2 and from the local basic call CC. Input signals from the left and output signals to the left represent information flows from and to FE4.

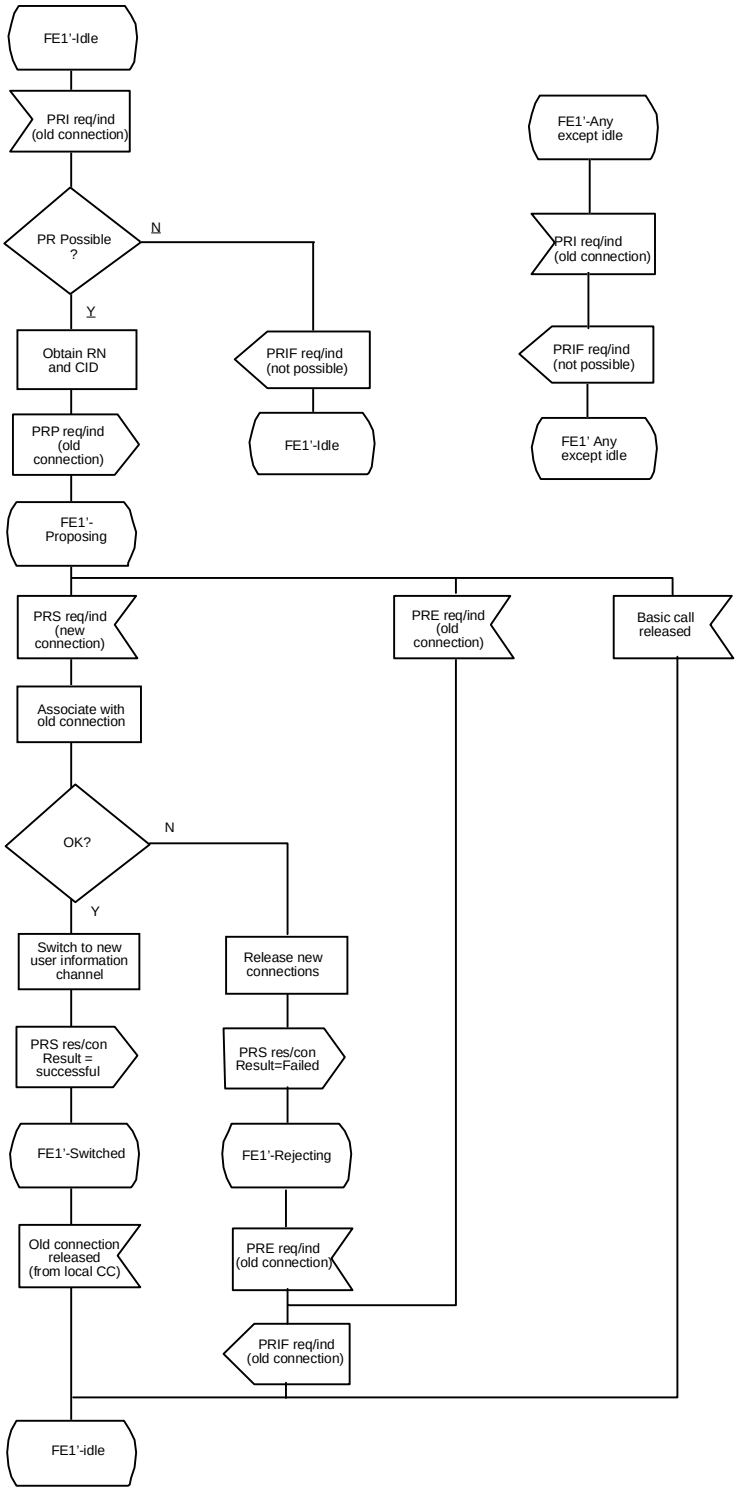

Figure 20 - ANF-PR, SDL for functional entity FE1´

Copyright International Organization for Standardization
Provided by IHS under license with ISO
No reproduction or networking permitted without license from IHS
Not for Resale

9.4.2 Behaviour of FE2

7.4.2 shall apply with the exception that input signals from the left and output signals to the left represent information flows from and to FE1´.

9.4.3 Behaviour of FE4

Figure 21 shows the normal behaviour of FE4. Input signal from the left and output signals to the left represent primitives from and to the ANF-PR user. Input signals from the right and output signals to the right represent information flows from and to FE1´ and from and to the basic call CC.

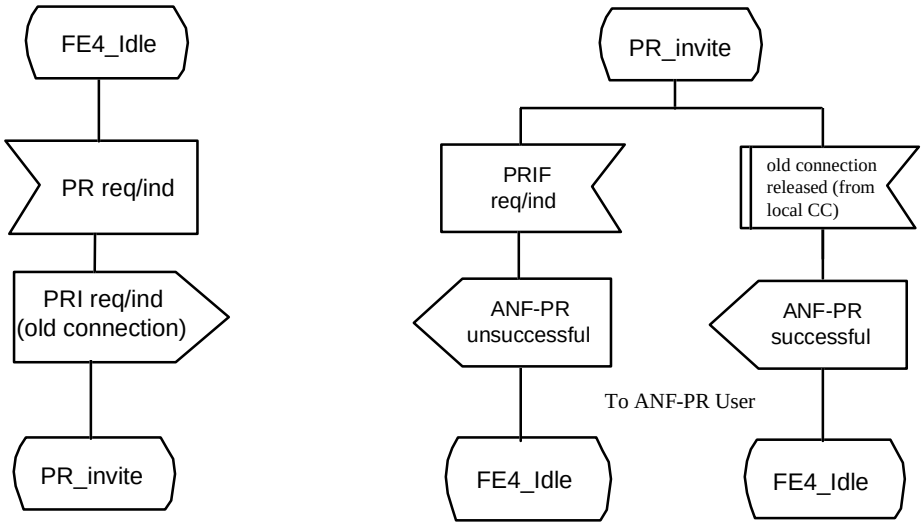

Figure 21 - ANF-PR, SDL for functional entity FE4

9.5 Allocation of functional entities to physical equipment

The allocations of FEs to physical equipment shown in table 8 shall apply.

FE1´ shall be located at either End PINX, depending on where the need for invoking ANF-PR arises. This will depend on the application.

In the case of a trombone connection, the Originating PINX or Incoming Gateway PINX will be the same PINX as the Terminating PINX or Outgoing Gateway PINX. Therefore FE1´ and FE2 will be collocated and the new connection and those information flows sent using the signalling path of the new connection will be intra-PINX. Information flow PRP request/-indication sent using the signalling path of the old connection will enable FE2 to determine that FE1´ is collocated.

FE4 may be located in any PINX in the connection.

Copyright International Organization for Standardization
Provided by IHS under license with ISO
No reproduction or networking permitted without license from IHS Not for Resale

Table 8 - Scenarios for the allocation of FEs to physical equipment

	FE1´ (note 2)	**FE2**	**FE4** (note 2)
Scenario 1	Originating PINX	Terminating PINX	any PINX in the connection
Scenario 2	Originating PINX	Outgoing Gateway PINX (note 1)	any PINX in the connection
Scenario 3	Incoming Gateway PINX (note 1)	Terminating PINX	any PINX in the connection
Scenario 4	Incoming Gateway PINX (note 1)	Outgoing Gateway PINX (note 1)	any PINX in the connection
Scenario 5	Terminating PINX	Originating PINX	any PINX in the connection
Scenario 6	Terminating PINX	Incoming Gateway PINX (note 1)	any PINX in the connection
Scenario 7	Outgoing Gateway PINX (note 1)	Originating PINX	any PINX in the connection
Scenario 8	Outgoing Gateway PINX (note 1)	Incoming Gateway PINX (note 1)	any PINX in the connection

Note 1 - When interworking with another network which supports an equivalent feature, FE1´, FE2 or FE4 may be located in that other network, thereby permitting replacement of the entire connection.

Note 2 - When FE1´ and FE4 are collocated the functionality is equivalent with FE1 of clause 7.

9.6 Interworking considerations

When interworking with another network which does not support an equivalent feature, the FEs for ANF-PR shall be located within PINXs, in accordance with 9.5. All information flows will be internal to the PISN.

When interworking with another network which supports an equivalent feature, the two networks may cooperate in the operation of ANF-PR. One or more of FE1´,FE2 or FE4 may be located in the other network and the information flows within the PISN will map on to equivalent information flows in the other network.

Copyright International Organization for Standardization
Provided by IHS under license with ISO
No reproduction or networking permitted without license from IHS Not for Resale

Annex A

(informative)

Circumstances in which ANF-PR might be invoked

ANF-PR can be used either to replace a connection which is no longer suitable or to obtain an improved connection. This annex describes some of the reasons why such situations can arise.

In some cases a separate ANF is used to provide criteria governing the routeing of the new connection. In the absence of specific criteria, the new connection will be established using the routeing rules which apply to basic call establishment.

A.1 Cost reduction

Even if there are no direct costs involved in a connection through a PISN, there are indirect costs through the use of inter-PINX connections and other resources which incur costs in some way, e.g., rental costs. Therefore the cost of a connection can be related to the resources used. By reducing the resources used, particularly the number of inter-PINX connections (and therefore the number of Transit PINXs), the cost can be reduced. The extreme case is the replacement of a trombone connection with an intra-PINX connection.

A higher cost connection can arise as a result of a supplementary service, as a result of a change in the relative costs of different connections (e.g., at certain times of day) or because of lack of resources necessary to establish a least cost connection. Some examples of how supplementary services can lead to higher cost connections are:

– for a call created by means of the "transfer by join" option of supplementary service Explicit Call Transfer, the connection will pass through the transferring user's PINX, which will not necessarily lie along a path which a least cost connection between the transferred users would occupy;

– for a call created by termination of an add-on conference, the connection will pass through the PINX which supplied the conference bridge, which will not necessarily lie along a path which a least cost connection between the two remaining users would occupy;

– for a call which has undergone Call Forwarding by Forward Switching, the connection will be routed via the forwarding PINX, which will not necessarily lie along a path which a least cost connection between the calling user and the forwarded to user would occupy.

Following a supplementary service which can lead to a higher cost connection, ANF-PR can be invoked immediately, provided the call has been answered. The decision to invoke ANF-PR can be based upon knowledge of whether the supplementary service has led to a connection which is not a least cost connection or, if that knowledge is not available, ANF-PR can be attempted anyway.

Similar considerations apply to the use of ANF-PR following a change in the relative costs of different connections.

Following normal call establishment, to avoid invoking ANF-PR on every call, it should be invoked only if it is known that a higher cost connection has been used. Invocation should wait until it is known that resources have become free or until sufficient time has elapsed for there to be a reasonable chance of resources having become free (e.g., 2 minutes).

The way in which it is determined that a higher cost connection is in use and the means by which it is ensured that the new connection is of lower cost than the old connection are outside the scope of this International Standard. It may involve the use of a separate ANF or manufacturer specific signalling protocols. A simplified means of ensuring that the new connection is not of higher cost than the old connection would be to switch to a new connection only if it is a least cost connection.

Following failure of ANF-PR to establish a connection of lower cost, further invocations of ANF-PR can be made at intervals (e.g., 2 minutes) until successful or until the call is released.

A.2 Change of bearer capability

If it is required to change basic service during a call, the bearer capabilities of the connection for the call can be inadequate for the support of the new basic service. ANF-PR can be invoked by the PISN while carrying out the change of basic service to

--`,,```,,,,````-`-`,,`,,`,`,,`---

Copyright International Organization for Standardization
Provided by IHS under license with ISO
No reproduction or networking permitted without license from IHS Not for Resale

obtain a new connection providing the bearer capabilities required. Failure to obtain a new path with the required bearer capabilities should result in abandonment of the attempt to change to the new basic service.

Because the flow of user information is interrupted during a change of basic service, there is no need in this case for ANF-PR to take steps to minimise disruption.

A.3 Quality of service improvement

ANF-PR can be used to obtain a new connection having better quality of service characteristics than the old connection. This need can arise when a connection has inadequate quality of service due to lack of availability of resources at the time of establishment or as a result of a supplementary service such as Call Transfer.

Following a supplementary service such as Call Transfer, ANF-PR can be invoked immediately, provided the call has been answered. The decision to invoke ANF-PR can be based upon knowledge of whether the supplementary service has led to inadequate quality of service characteristics or, if that knowledge is not available, ANF-PR can be attempted anyway.

Following normal call establishment, to avoid invoking ANF-PR on every call, it should be invoked only if it is known that the connection has inadequate quality of service characteristics. Invocation should wait until it is known that resources have become free to provide improved characteristics or until sufficient time has elapsed for there to be a reasonable chance of resources having become free (e.g., 2 minutes).

The way in which it is determined that a connection has inadequate quality of service characteristics and the means by which it is ensured that the new connection has adequate or improved characteristics are outside the scope of this International Standard. It may involve the use of a separate ANF or manufacturer specific signalling protocols.

Following failure of ANF-PR to establish a connection with improved quality of service characteristics, further invocations of ANF-PR can be made at intervals (e.g., 2 minutes) until successful or until the call is released.

A.4 Maintenance actions

ANF-PR can be used to change from a connection which involves failed equipment or equipment which is to be taken out of service. This is particularly useful for calls of long duration and permanent calls.

The way in which it is determined that a equipment has failed or is to be taken out of service and the means by which the new connection avoids the use of such equipment falls within the scope of network management. It is outside the scope of this International Standard.

Copyright International Organization for Standardization
Provided by IHS under license with ISO
No reproduction or networking permitted without license from IHS Not for Resale

Annex B

(informative)

Avoidance of unacceptable disruption to user information

Disruption to the flow of user information will occur if there is a difference in transmission delay between the new connection and the old connection. This source of disruption, which is unavoidable, will result in a number of consecutive bits being lost or received twice. The effect will be similar in each direction.

Disruption can also occur because FE1 (or FE1´) and FE2 switch over to the new connection at different times, owing to signalling delays. Whether this second source of disruption occurs and what its effect will be depend on the method of handling the user information channels at the two FEs.

B.1 Methods of handling user information channels

Although the method of handling user information channels is an implementation matter, two basic approaches are foreseen: simultaneous switch over of both directions of transmission and separate switch over of each direction of transmission. Each has certain advantages and disadvantages, and choice can be influenced or dictated by PINX design.

B.1.1 Simultaneous switch over of both directions of transmission

With this approach, switch over occurs at FE1 (or FE1´) (when sending PRS response/confirmation) followed by switch over at FE2 (on receipt of PRS response/confirmation). The effect is a loss of user information in each direction for the time taken for PRS response/confirmation to reach and be processed by FE2.

This method can be enhanced for certain services, e.g., telephony, by using a conference bridge at FE1 (or FE1´) to connect the old user information channel in conference with the new user information channel until PRP response/confirmation is received. This enhancement avoids any loss of user information due to signalling delays. To avoid feeding unwanted information into the conference bridge, FE2 should ensure that a silence pattern is transmitted on the new user information channel prior to switch over and on the old user information channel after switch over.

B.1.2 Separate switch over of each direction of transmission

With this approach, FE2 transmits on the new user information channel as soon as it has been agreed with the next CC, whilst continuing to transmit and receive on the old user information channel. When sending the PRS response/confirmation, FE1 (or FE1´) switches over to the new user information channel for transmission and reception, but also continues to transmit on the old user information channel. On receipt of the PRS response/confirmation, FE2 switches over to the new user information channel for reception as well as transmission. Effectively the two directions of transmission are switched over at different times, and any disruption in user information due to signalling delays is eliminated.

B.1.3 Mixed operation

Because the method of handling the user information channels is an implementation matter, the situation can arise where FE1 (or FE1´) and FE2 adopt different approaches. This is likely to lead to loss of information in one or both directions for a period determined by signalling delays. In the case where FE1 (or FE1´) uses a conference bridge, it can also lead to a period of noise.

B.2 Preventing the use of ANF-PR

Whichever, approach is taken, there will be some disruption to user information. For some applications this will not matter, e.g., because of recovery mechanisms at higher layers or because the transmission of user information has been interrupted anyway (as is the case during In-Call Modification). For other applications this disruption might be unacceptable, and therefore steps should be taken to prevent the use of ANF-PR on such calls. Possible means include:

– limiting ANF-PR to basic services where it is known that the disruption caused can be tolerated;

– service marking users which are known to use certain applications so that ANF-PR will not be invoked for certain basic services;

Copyright International Organization for Standardization
Provided by IHS under license with ISO
No reproduction or networking permitted without license from IHS Not for Resale

– allowing users to request, on a per call basis, that ANF-PR be prevented.

B.3 Replacement of trombone connections

The special case of changing from a trombone connection to an intra-PINX connection is not subject to additional disruption due to signalling delays, and therefore ANF-PR might be possible even for applications which cannot tolerate ANF-PR under normal circumstances.

--`,,```,,,,````-`-`,,`,,`,`,,`---

Copyright International Organization for Standardization
Provided by IHS under license with ISO
No reproduction or networking permitted without license from IHS Not for Resale

ICS 33.040.35

Price based on 37 pages

Copyright International Organization for Standardization
Provided by IHS under license with ISO
No reproduction or networking permitted without license from IHS Not for Resale