INTERNATIONAL STANDARD

ISO/IEC 13842

First edition
1995-12-15

Information technology — 130 mm optical disk cartridges for information interchange — Capacity: 2 Gbytes per cartridge

Technologies de l'information — Cartouches de disque optique de diamètre 130 mm *pour l'échange d'informations — Capacité: 2 Gbytes par cartouche*

Reference number
ISO/IEC 13842:1995(E)

Copyright International Organization for Standardization
Provided by IHS under license with ISO
No reproduction or networking permitted without license from IHS

Not for Resale

Contents

Section 1: General 1

1 Scope 1

2 Conformance 1

2.1 Optical Disk Cartridge (ODC) 1
2.2 Generating system 1
2.3 Receiving system 1
2.4 Compatibility statement 1

3 Normative reference 2

4 Definitions 2

4.1 band 2
4.2 case 2
4.3 clamping zone 2
4.4 control track 2
4.5 Cyclic Redundancy Check (CRC) 2
4.6 defect management 2
4.7 disk reference plane 2
4.8 entrance surface 2
4.9 Error Correction Code (ECC) 2
4.10 format 2
4.11 hub 2
4.12 interleaving 2
4.13 Kerr rotation 2
4.14 land and groove 2
4.15 logical track 2
4.16 mark 2
4.17 mark edge 2
4.18 mark edge recording 2
4.19 optical disk 3
4.20 optical disk cartridge (ODC) 3
4.21 physical track 3
4.22 polarization 3
4.23 pre-recorded mark 3
4.24 read power 3
4.25 recording layer 3

© ISO/IEC 1995
All rights reserved. Unless otherwise specified, no part of this publication may be reproduced or utilized in any form or by any means, electronic or mechanical, including photocopying and microfilm, without permission in writing from the publisher.
ISO/IEC Copyright Office * Case Postale 56 * CH-1211 Genève 20 * Switzerland
Printed in Switzerland

Copyright International Organization for Standardization
Provided by IHS under license with ISO
No reproduction or networking permitted without license from IHS
Not for Resale

4.26 Reed-Solomon code 3
4.27 spindle 3
4.28 substrate 3
4.29 track pitch 3
4.30 write-inhibit hole 3
4.31 write once functionality 3
4.32 zone 3

5 Conventions and notations 3

5.1 Representation of numbers 3
5.2 Names 4

6 List of acronyms 4

7 General description of the optical disk cartridge 4

8 General requirements 5

8.1 Environments 5

8.1.1 Test environment 5
8.1.2 Operating environment 5
8.1.3 Storage environment 5
8.1.4 Transportation 6

8.2 Temperature shock 6
8.3 Safety requirements 6
8.4 Flammability 6

9 Reference Drive 6

9.1 Optical system 6
9.2 Optical beam 8
9.3 Read channels 8
9.4 Tracking 8
9.5 Rotation of the disk 8

Section 2: Mechanical and physical characteristics 9

10 Dimensional and physical characteristics of the case 9

10.1 General description of the case 9
10.2 Relationship of Sides A and B 9
10.3 Reference axes and case reference planes 9
10.4 Case drawings 9
10.5 Dimensions of the case 9

10.5.1 Overall dimensions 9
10.5.2 Location hole 10
10.5.3 Alignment hole 11
10.5.4 Surfaces on Reference Planes P 11
10.5.5 Insertion slots and detent features 12
10.5.6 Gripper slots 13
10.5.7 Write-inhibit holes 13
10.5.8 Media sensor holes 13
10.5.9 Head and motor window 15
10.5.10 Shutter 16
10.5.11 Slot for shutter opener 16
10.5.12 Shutter sensor notch 17
10.5.13 User label areas 17

10.6 Mechanical characteristics 17

Copyright International Organization for Standardization
Provided by IHS under license with ISO
No reproduction or networking permitted without license from IHS
Not for Resale

10.6.1 Materials 17
10.6.2 Mass 17
10.6.3 Edge distortion 17
10.6.4 Compliance 18
10.6.5 Shutter opening force 18

10.7 Drop test 18

11 Dimensional, mechanical and physical characteristics of the disk 18

11.1 General description of the disk 18
11.2 Reference axis and plane of the disk 18
11.3 Dimensions of the disk 18

11.3.1 Hub dimension 18

11.4 Mechanical characteristics 19

11.4.1 Material 19
11.4.2 Mass 20
11.4.3 Moment of inertia 20
11.4.4 Imbalance 20
11.4.5 Axial deflection 20
11.4.6 Axial acceleration 20
11.4.7 Radial runout 20
11.4.8 Radial acceleration 21
11.4.9 Tilt 21

11.5 Optical characteristics 21

11.5.1 Index of refraction 21
11.5.2 Thickness 21
11.5.3 Birefringence 21
11.5.4 Reflectance 21

12 Interface between cartridge and drive 22

12.1 Clamping method 22
12.2 Clamping force 22
12.3 Capture cylinder (see figure 13) 22
12.4 Disk position in the operating condition 22

Section 3: Format of information 37

13 Track geometry 37

13.1 Track shape 37
13.2 Direction of track spiral 37
13.3 Track pitch 37
13.4 Logical track number 37
13.5 Physical track number 37

14 Track format 37

14.1 Physical track layout 37

14.2 Logical track layout 38
14.3 Radial alignment 38
14.4 Sector number 38

15 Sector format 38

15.1 Sector layout 38
15.2 Sector mark 39

Copyright International Organization for Standardization
Provided by IHS under license with ISO
No reproduction or networking permitted without license from IHS Not for Resale

15.3 VFO fields 40
15.4 Address Mark (AM) 41
15.5 ID fields 41
15.6 Postamble (PA) 41
15.7 Gap 42
15.8 Auto Laser Power Control (ALPC) 42
15.9 Sync 42
15.10 Data field 42

15.10.1 User data bytes 43
15.10.2 CRC and ECC bytes 43
15.10.3 Bytes for control information (DMP) 43
15.10.4 Last bytes of the data field of the 512-byte sector format 43
15.10.5 Resync bytes 43

15.11 Buffer field 43

16 Recording code 44

17 Formatted Zone 45

17.1 General description of the Formatted Zone 45
17.2 Division of the Formatted Zone 45

17.2.1 Lead-in Zone 46
17.2.2 Manufacturer Zones 46
17.2.3 User Zone 47
17.2.4 Reflective Zone 47
17.2.5 Control Track Zones 47

17.3 Control Track PEP Zone 47

17.3.1 Recording in the PEP Zone 47
17.3.2 Format of the tracks of the PEP Zone 48

17.4 Control Track SFP Zones 51

17.4.1 Duplicate of the PEP information 51
17.4.2 Media information 51
17.4.3 System Information 56

18 Layout of the User Zone 57

18.1 General description of the User Zone 57
18.2 Divisions of the User Zone 57
18.3 User Area 58
18.4 Defect Management Areas (DMAs) 65
18.5 Disk Definition Structure 65
18.6 Rewritable Zone 67

18.6.1 Location 68
18.6.2 Partitioning 68

18.7 Embossed Zone 68

18.7.1 Location 68
18.7.2 Partitioning 68
18.7.3 Parity sectors 68

18.8 Write Once Zone 69

18.8.1 Location 69
18.8.2 Partitioning 69

Copyright International Organization for Standardization
Provided by IHS under license with ISO
No reproduction or networking permitted without license from IHS
Not for Resale

19 Defect Management in the Rewritable and Write Once Zones 69

19.1 Initialization of the disk 69
19.2 Certification 69

19.2.1 Slipping Algorithm 69
19.2.2 Linear Replacement Algorithm 70

19.3 Disks not certified 70
19.4 Write procedure 70
19.5 Primary Defect List (PDL) 70
19.6 Secondary Defect List (SDL) 71

Section 4: Characteristics of embossed information 73

20 Method of testing 73

20.1 Environment 73
20.2 Use of the Reference Drive 73

20.2.1 Optics and mechanics 73
20.2.2 Read power 73
20.2.3 Read channels 73
20.2.4 Tracking 73

20.3 Definition of signals 73

21 Signal from grooves 75

21.1 Cross-track signal modulation ratio 75
21.2 Cross-track minimum signal ratio 75
21.3 Push-pull ratio 75
21.4 Divided push-pull signal 76
21.5 On-track signal ratio 76
21.6 Phase depth 77
21.7 Track location 77

22 Signals from Headers 77

22.1 Sector Mark Signals 77
22.2 VFO signals 77
22.3 Address Mark, ID and PA signals 77
22.4 Timing jitter 78

23 Signals from embossed Recording fields 78

23.1 Signal amplitude 78
23.2 Modulation method offset 78
23.3 Timing Jitter 79

24 Signals from Control Track PEP marks 79

Section 5: Characteristics of the recording layer 80

25 Method of testing 80

25.1 Environment 80
25.2 Reference Drive 80

25.2.1 Optics and mechanics 80
25.2.2 Read power 80
25.2.3 Read Channel 80
25.2.4 Tracking 80
25.2.5 Signal detection for testing purposes 80

Copyright International Organization for Standardization
Provided by IHS under license with ISO
No reproduction or networking permitted without license from IHS Not for Resale

25.3 Write conditions 81

25.3.1 Write pulse and power 81
25.3.2 Write magnetic field and temperature 81
25.3.3 2T and 4T pulse power determination 81
25.3.4 Media power sensitivity 81

25.4 Erase conditions 82

25.4.1 Erase power 82
25.4.2 Erase magnetic field 82

25.5 Definition of signals 82

26 Magneto-optical characteristics 82

26.1 Figure of merit for magneto-optical signal 82
26.2 Imbalance of magneto-optical signal 82

27 Write characteristics 83

27.1 Resolution 83
27.2 Narrow-band signal-to-noise ratio 83
27.3 Cross-talk ratio 84

27.3.1 Rewritable track test method 84
27.3.2 Embossed track test method 84

27.4 Timing Jitter 85
27.5 Media thermal build-up during mark formation 85

28 Erase power determination 86

Section 6: Characteristics of user data 87

29 Method of testing 87

29.1 Environment 87
29.2 Reference Drive 87

29.2.1 Optics and mechanics 87
29.2.2 Read power 87
29.2.3 Read amplifiers 87
29.2.4 Mark Quality 87
29.2.5 Channel bit clock 88
29.2.6 Binary-to-digital converters 88
29.2.7 Error correction 88
29.2.8 Tracking 88

30 Minimum quality of a sector 88

30.1 Headers 88

30.1.1 Sector Mark 88
30.1.2 D fields 88

30.2 User-written data 88

30.2.1 Byte errors 88
30.2.2 Modulation method offset 88
30.2.3 Timing jitter 89

30.3 Embossed data 89

30.3.1 Byte errors 89
30.3.2 Modulation method offset 89

Copyright International Organization for Standardization
Provided by IHS under license with ISO
No reproduction or networking permitted without license from IHS
Not for Resale

30.3.3 Timing jitter 89

31 Data interchange requirements 89

31.1 Tracking 89
31.2 User-written data 89
31.3 Embossed data 89
31.4 Quality of disk 89

Annexes

A - Air cleanliness class 100 000 90

B - Edge distortion test 91

C - Compliance test 92

D - Test method for measuring the adsorbent force of the hub 94

E - CRC for ID fields 96

F - Interleave, CRC, ECC, Resync for the data field 97

G - Determination of Resync pattern 103

H - Read Channel for measuring C/N and jitter 108

J - Timing jitter measuring procedure 109

K - Definition of write pulse shape 110

L - Measurement of figure of merit 111

M - Implementation Independent Mark Quality Determination (IIMQD) for the interchange of recorded media 112

N - Requirements for interchange 113

P - Office environment 115

Q - Derivation of the operating climatic environment 116

R - Transportation 120

S - Sector retirement guidelines 121

T - Track deviation measurement 122

U - Values to be implemented in existing and future standards 126

V - Guidelines for the use of Type WO ODCs 127

Copyright International Organization for Standardization
Provided by IHS under license with ISO
No reproduction or networking permitted without license from IHS Not for Resale

Foreword

ISO (the International Organization for Standardization) and IEC (the International Electrotechnical Commission) form the specialized system for worldwide standardization. National bodies that are members of ISO or IEC participate in the development of International Standards through technical committees established by the respective organization to deal with particular fields of technical activity. ISO and IEC technical committees collaborate in fields of mutual interest. Other international organizations, governmental and non-governmental, in liaison with ISO and IEC, also take part in the work.

In the field of information technology, ISO and IEC have established a joint technical committee, ISO/IEC JTC 1. Draft International Standards adopted by the joint technical committee are circulated to national bodies for voting. Publication as an International Standard requires approval by at least 75 % of the national bodies casting a vote.

International Standard ISO/IEC 13842 was prepared by Joint Technical Committee ISO/IEC JTC 1, *Information technology*, Subcommittee SC23, *Optical disk cartridges for information interchange*.

Annexes A to N form an integral part of this International Standard. Annexes P to V are for information only.

Copyright International Organization for Standardization
Provided by IHS under license with ISO
No reproduction or networking permitted without license from IHS
Not for Resale

Introduction

This International Standard specifies the characteristics of a series of related 130 mm optical disk cartridges (ODCs) by using a number of Type designations.

The two sides of the disk, called Side A and Side B, with each a nominal storage capacity of 1 Gigabyte are given specific Type designations. Thus, Side A and Side B may be different types.

Types R/W, R/W-R	provide for data to be written, read and erased many times over the whole of both recording surfaces of the corresponding disk side, using the thermo-magnetic and magneto-optical effects.
Types P-ROM, P-ROM-R	provide for part of both disk surfaces to be pre-recorded and reproduced by stamping or other means. This part of the disk is read without recourse to the magnetico-optical effect. All parts which are not pre-recorded provide for data to meet the requirements of Types R/W and R/W-R, respectively.
Types O-ROM, O-ROM-R	provide for the whole of both disk surfaces to be pre-recorded and reproduced by stamping or other means. The corresponding disk sides are read without recourse to the magneto-optical effects.
Types WO, WO-R	provide write-once, read-multiple functionality using the thermo-magnetic and the magneto-optical effects.
Type B	indicates that the cartridge side shall not be used. This Type designation may be used for Side B only.

The suffix - **R**, which may be used for Side B only, indicates that the tracks of Side B spiral in the opposite direction to those on Side A. Such ODCs facilitate simultaneous access to both sides of the disk by a dual optical system.

The 20 combinations of Types allowed by this International Standard for the two sides of disks are specified in table 2 in clause 10.5.8.

In addition, for each Type, this International Standard provides for 512-byte and 1 024-byte sector sizes. All sectors of an ODC are the same size.

Copyright International Organization for Standardization
Provided by IHS under license with ISO
No reproduction or networking permitted without license from IHS
Not for Resale

Information technology — 130 mm optical disk cartridges for information interchange — Capacity: 2 Gbytes per cartridge

Section 1: General

1 Scope

This International Standard specifies

- the conditions for conformance testing and the Reference Drive;
- the environments in which the cartridges are to be operated and stored;
- the mechanical, physical and dimensional characteristics of the cartridge, so as to provide mechanical interchangeability between data processing systems;
- the format of the information on the disk, both embossed and user-written, including the physical disposition of the tracks and sectors, the error correction codes, the modulation methods used;
- the characteristics of the embossed information on the disk;
- the magneto-optical characteristics of the disk, enabling processing systems to write data onto the disk;
- the minimum quality of user-written data on the disk, enabling data processing systems to read data from the disk.

This International Standard provides for interchange between optical disk drives. Together with a Standard for volume and file structure it provides for full data interchange between data processing systems.

2 Conformance

2.1 Optical Disk Cartridge (ODC)

An ODC claiming conformance with this International Standard shall specify the Type of its two sides. It shall be in conformance if it meets all mandatory requirements specified herein for those Types of sides.

2.2 Generating system

A claim of conformance with this International Standard shall specify which of Types R/W, R/W-R, P-ROM, P-ROM-R, O-ROM, O-ROM-R, WO, WO-R, and B is(are) supported. A system generating an ODC for interchange shall be entitled to claim conformance with this International Standard if it meets the mandatory requirements of this Standard for the Type(s) supported.

2.3 Receiving system

A claim of conformance with this International Standard shall specify which Type(s) of side(s) is(are) supported.

A system receiving an ODC for interchange shall be entitled to claim conformance with this International Standard if it is able to handle any recording made on the cartridge according to 2.1 on the Types specified.

2.4 Compatibility statement

A claim of conformance by a generating or receiving system with this International Standard shall include a statement listing any other International Optical Disk Cartridge Standard supported. This statement shall specify the number of the Standard (s), including, where appropriate, the ODC Type(s), or the Types of side, and whether support includes reading only or both reading and writing.

Copyright International Organization for Standardization
Provided by IHS under license with ISO
No reproduction or networking permitted without license from IHS
Not for Resale

3 Normative reference

The following standard contains provisions which, through reference in this text, constitute provisions of this International Standard. At the time of publication, the edition indicated was valid. All standards are subject to revision, and parties to agreements based on this International Standard are encouraged to investigate the possibility of applying the most recent editions of the standard indicated below. Members of IEC and ISO maintain registers of currently valid International Standards.

IEC 950:1991, *Safety of information technology equipment , including electrical business equipment.*

4 Definitions

For the purpose of this International Standard, the following definitions apply.

4.1 band: An annular area within the user zone on the disk having a constant clock frequency.

4.2 case: The housing for an optical disk, that protects the disk and facilitates disk interchange.

4.3 clamping zone: The annular part of the disk within which the clamping force is applied by the clamping device.

4.4 control track: A track containing the information on media parameters and format necessary for writing, reading and erasing the remaining tracks on the optical disk.

4.5 Cyclic Redundancy Check (CRC): A method for detecting errors in data.

4.6 defect management: A method for handling the defective areas on the disk.

4.7 disk reference plane: A plane defined by the perfectly flat annular surface of an ideal spindle onto which the clamping zone of the disk is clamped, and which is normal to the axis of rotation.

4.8 entrance surface: The surface of the disk on to which the optical beam first impinges.

4.9 Error Correction Code (ECC): An error-detecting code designed to correct certain kinds of errors in data.

4.10 format: The arrangement or layout of information on the disk.

4.11 hub: The central feature on the disk which interacts with the spindle of the disk drive to provide radial centring and the clamping force.

4.12 interleaving: The process of allocating the physical sequence of units of data so as to render the data more immune to burst errors.

4.13 Kerr rotation: The rotation of the plane of polarization of an optical beam upon reflection from the recording layer as caused by the magneto-optical Kerr effect.

4.14 land and groove: A trench-like feature of the disk, applied before the recording of any information, and used to define the track location. The groove is located nearer to the entrance surface than the land with which it is paired to form a track.

4.15 logical track: Either 31 consecutive sectors for 512-byte sector disks or 17 consecutive sectors for disks with 1 024-byte sector in one or more physical tracks. The first sector of each logical track is assigned sector number 0.

4.16 mark: A feature of the recording layer which may take the form of a magnetic domain, a pit, or any other type or form that can be sensed by the optical system. The pattern of marks represents the data on the disk.

NOTE 1 - Subdivisions of a sector which are named "mark" are not marks in the sense of this definition.

4.17 mark edge: The transition between a region with a mark and one without a mark or vice versa, along the track.

4.18 mark edge recording: A recording method which uses a mark edge to represent a Channel bit.

Copyright International Organization for Standardization
Provided by IHS under license with ISO
No reproduction or networking permitted without license from IHS Not for Resale

4.19 optical disk: A disk that will accept and retain information in the form of marks in a recording layer, that can be read with an optical beam.

4.20 optical disk cartridge (ODC): A device consisting of a case containing an optical disk.

4.21 physical track: The path which is followed by the focus of the optical beam during one revolution of the disk. This path is not directly addressable.

4.22 polarization: The direction of polarization of an optical beam is the direction of the electric vector of the beam.

NOTE 2 - The plane of polarization is the plane containing the electric vector and the direction of propagation of the beam. The polarization is right-handed when to an observer looking in the direction of propagation of the beam, the end-point of the electric vector would appear to describe an ellipse in the clockwise sense.

4.23 pre-recorded mark: A mark so formed as to be unalterable by magneto-optical means.

4.24 read power: The read power is the optical power, incident at the entrance surface of the disk, used when reading.

NOTE 3 - It is specified as a maximum power that may be used without damage to the written data. Lower power may be used providing that the signal-to-noise ratio and other requirements of this International Standard are met.

4.25 recording layer: A layer of the disk on, or in, which data is written during manufacture and/or use.

4.26 Reed-Solomon code: An error detection and/or correction code which is particularly suited to the correction of errors which occur in bursts or are strongly correlated.

4.27 spindle: The part of the disk drive which contacts the disk and/or hub.

4.28 substrate: A transparent layer of the disk, provided for mechanical support of the recording layer, through which the optical beam accesses the recording layer.

4.29 track pitch: The distance between adjacent track centrelines, measured in a radial direction.

4.30 write-inhibit hole: A hole in the case which, when detected by the drive to be open, inhibits both write and erase operations.

4.31 write once functionality: A technique whereby a rewritable MO ODC is restricted to initialization and writing once only; erase is not permitted.

4.32 zone: An annular area of the disk.

5 Conventions and notations

5.1 Representation of numbers

A measured value is rounded off to the least significant digit of the corresponding specified value. It implies that a specified value of 1,26 with a positive tolerance of +0,01, and a negative tolerance of -0,02 allows a range of measured values from 1,235 to 1,275.

Letters and digits in parentheses represent numbers in hexadecimal notation.

The setting of a bit is denoted by ZERO or ONE.

Numbers in binary notation and bit combinations are represented by strings of ZEROs and ONEs.

Numbers in binary notation and bit combinations are shown with the most significant bit to the left.

Negative values of numbers in binary notation are given in TWO's complement.

In each field the data is recorded so that the most significant byte (byte 0) is recorded first. Within each byte the least significant bit is numbered 0 and is recorded last, the most significant bit (numbered 7 in an 8-bit byte) is recorded first. This order of recording applies also to the data input of the Error Detection and Correction circuits and their output.

Copyright International Organization for Standardization
Provided by IHS under license with ISO
No reproduction or networking permitted without license from IHS
Not for Resale

Unless otherwise stated, groups of decimal digits of the form xx ... x/yy ... y indicate that the value xx ... x applies to 1 024-byte sectors and that the value yy ... y applies to 512-byte sectors.

5.2 Names

The names of entities, e.g. specific tracks, fields, etc., are given with a capital initial.

6 List of acronyms

ALPC	Auto Laser Power Control
AM	Address Mark
CRC	Cyclic Redundancy Code
DDS	Disk Definition Structure
DMA	Defect Management Area
DMP	Defect Management Pointers
ECC	Error Correction Code
EDAC	Error Detection and Correction Code
ID	Identifier
LBA	Logical Block Address
LSB	Least Significant Byte
MO	Magneto-Optical
MSB	Most Significant Byte
ODC	Optical Disk Cartridge
O-ROM	Optical Read Only Memory
PA	Postamble
PDL	Primary Defect List
PEP	Phase-Encoded Part of the Control Tracks
P-ROM	Partial Read Only Memory
RLL(1,7)	Run Length Limited (code)
R-S	Reed-Solomon (code)
R/W	Rewritable
R-S/LDC	Reed-Solomon Long Distance Code
SCSI	Small Computer System Interface
SDL	Secondary Defect List
SFP	Standard Formatted Part of the Control Tracks
SM	Sector Mark
VFO	Variable Frequency Oscillator
WO	Write Once
ZCAV	Zoned Constant Angular Velocity

7 General description of the optical disk cartridge

The optical disk cartridge which is the subject of this International Standard consists of a case containing an optical disk.

The case is a protective enclosure for the disk. It has access windows covered by a shutter. The windows are automatically uncovered by the drive when the cartridge is inserted into it.

The optical disk consists of two sides assembled together with their recording layers, if any, on the inside. The disk sides may be of different Types as specified in table 2.

The optical disk may be recordable on both sides which may be read and written simultaneously. Data can be written onto the disk as marks in the form of magnetic domains in the recording layer and can be erased from it with a focused optical beam, using the thermo-magnetic effect. The data can be read with a focused optical beam, using the magneto-optical effect. The beam accesses the recording layer through the transparent substrate of the disk side.

Part of the disk or the entire disk may contain read-only data in the form of pre-embossed pits. This data can be read using the diffraction of the optical beam by the embossed pits.

Copyright International Organization for Standardization
Provided by IHS under license with ISO
No reproduction or networking permitted without license from IHS Not for Resale

The entire disk may be used for write once recording of data using the thermo-magnetic effect. This data can be read using the magneto-optical effect.

8 General requirements

8.1 Environments

8.1.1 Test environment

The test environment is the environment where the air immediately surrounding the optical disk cartridge has the following properties:

temperature	: 23 °C ± 2 °C
relative humidity	: 45 % to 55 %
atmospheric pressure	: 60 kPa to 106 kPa
air cleanliness	: Class 100 000 (see annex A)

No condensation on or in the optical disk cartridge shall occur. Before testing, the optical disk cartridge shall be conditioned in this environment for 48 h minimum. It is recommended that, before testing, the entrance surface of the disk be cleaned according to the instructions of the manufacturer of the disk.

Unless otherwise stated, all tests and measurements shall be made in this test environment.

8.1.2 Operating environment

This International Standard requires that an optical disk cartridge which meets all requirements of this International Standard in the specified test environment provides data interchange over the specified ranges of environmental parameters in the operating environment.

The operating environment is the environment where the air immediately surrounding the optical disk cartridge has the following properties:

temperature	: 5 °C to 55 °C
relative humidity	: 3 % to 85 %
absolute humidity	: 1 g/m^3 to 30 g/m^3
atmospheric pressure	: 60 kPa to 106 kPa
temperature gradient	: 10 °C/h max.
relative humidity gradient	: 10 %/h max.
air cleanliness	: office environment (see annex P)
magnetic field strength at the recording layer for any condition under which a beam is in focus	: 32 000 A/m max.
Magnetic field strength at the recording layer during any other condition	: 48 000 A/m max.

No condensation on or in the optical disk cartridge shall occur. If an optical disk cartridge has been exposed to conditions outside those specified in this clause, it shall be acclimatized in an allowed operating environment for at least 2 hours before use. (See also annex Q).

8.1.3 Storage environment

The optical disk cartridge without any protective enclosure shall not be stored in an environment outside the range allowed for storage. The storage environment is defined as an environment where the air immediately surrounding the optical disk cartridge has the following properties:

temperature	: -10 °C to 55 °C
relative humidity	: 3 % to 90 %
absolute humidity	: 1 g/m^3 to 30 g/m^3
atmospheric pressure	: 60 kPa to 106 kPa
temperature gradient	: 15 °C/h max.
relative humidity gradient	: 10 %/h max.
air cleanliness	: office environment (see annex P)
magnetic field strength at the recording layer	: 48 000 A/m max.

Copyright International Organization for Standardization
Provided by IHS under license with ISO
No reproduction or networking permitted without license from IHS
Not for Resale

No condensation on or in the optical disk cartridge shall occur.

8.1.4 Transportation

This International Standard does not specify requirements for transportation; guidance is given in annex R.

8.2 Temperature shock

The optical disk cartridge shall withstand a temperature shock of up to 20 °C when inserted into, or removed from, the drive.

8.3 Safety requirements

The cartridge shall satisfy the safety requirements of Standard IEC 950, when used in the intended manner or in any foreseeable use in an information processing system.

8.4 Flammability

The cartridge and its components shall be made from materials that comply with the flammability class for HB materials, or better, as specified in Standard IEC 950.

9 Reference Drive

The Reference Drive is a drive several critical components of which have well defined properties and which is used to test write, read and erase parameters of the disk for conformance to this International Standard. The critical components vary from test to test. This clause gives an outline of all components; components critical for tests in specific clauses are specified in those clauses.

9.1 Optical system

The basic set-up of the optical system of the Reference Drive used for measuring the write, read and erase parameters is shown in figure 1. Different components and locations of components are permitted, provided that the performance remains the same as that of the set-up in figure 1. The optical system shall be such that the detected light reflected from the entrance surface of the disk is minimized so as not to influence the accuracy of the measurements.

Copyright International Organization for Standardization
Provided by IHS under license with ISO
No reproduction or networking permitted without license from IHS Not for Resale

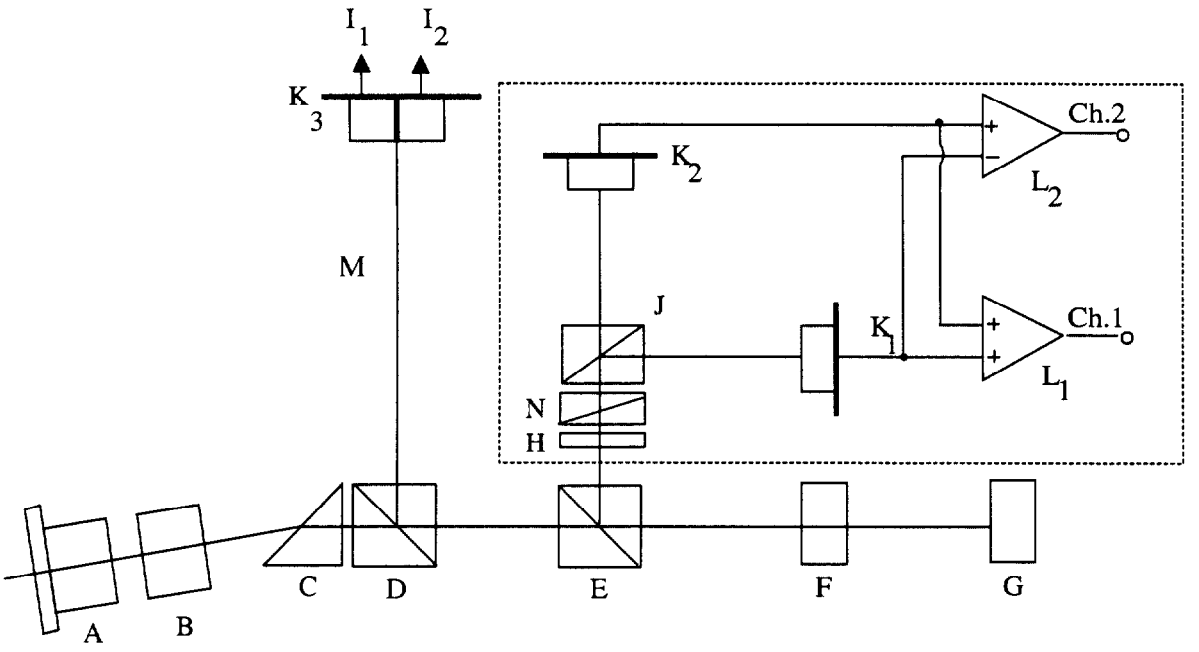

95-0041-I

A	Laser diode	G	Optical disk
B	Collimator lens	H	Optional half-wave plate
C	Optional shaping prism	I_1,I_2	Tracking signals from photodiode K_3
Ch.1	Channel 1	J	Polarizing beam splitter
Ch.2	Channel 2	K_1,K_2	Photodiodes for channels 1 and 2
D	Beam splitter	K_3	Split photodiode
E	Polarizing beam splitter	L_1,L_2	DC-coupled amplifiers
F	Objective lens	M	Tracking Channel (see 20.3)
		N	Phase retarder

Figure 1 - Optical system of the Reference Drive

In the absence of polarization changes in the disk, the polarizing beam splitter J shall be aligned to make the signal of detector K_1 equal to that of detector K_2. The direction of polarization in this case is called the neutral direction. The phase retarder I shall be adjusted such that the optical system does not have more than 2,5° phase retardation between the neutral polarization and the polarization perpendicular to it. This position of the retarder is called the neutral position.

The phase retarder can be used for the measurement of the narrow-band signal-to-noise ratio (see 26.2).

The beam splitter J shall have a p-s intensity reflectance ratio of at least 100.

The beam splitter E shall have an intensity reflectance R_p from F to H of nominally 0,30 for the neutral polarization direction. The reflectance R_s for the polarization perpendicular to the neutral direction shall be nominally 0,95. The actual value of R_s shall not be smaller than 0,90.

The imbalance of the magneto-optical signal is specified for a beam splitter with nominal reflectance. If the measurement is made on a drive with reflectance's $R_{p'}$ and $R_{s'}$ for beam splitter E, then the measured imbalance shall be multiplied by

$$\sqrt{\frac{R_s R_{p'}}{R_p R_{s'}}}$$

to make it correspond to the nominal beam splitter E.

Copyright International Organization for Standardization
Provided by IHS under license with ISO
No reproduction or networking permitted without license from IHS
Not for Resale

The output of Channel 1 is the sum of the currents through photodiodes K_1 and K_2, and is used for reading embossed marks. The output of Channel 2 is the difference between photo-diode currents, and is used for reading user-written marks with the magneto-optical effect.

NOTE 4 - For Type - R sides, the optical system shall be duplicated such that measurements on both sides of the disk may be taken without flipping the disk.

9.2 Optical beam

The focused optical beam used for writing, reading and erasing data shall have the following properties:

a)	Wavelength (λ)	780 nm $^{+15\ nm}_{-10\ nm}$
b)	Wavelength (λ) divided by the numerical aperture of the objective lens (NA)	λ / NA = 1,423 µm ± 0,023 µm
c)	Filling D/W of the aperture of the objective lens	1,0 max.
d)	Variance of the wavefront of the optical beam near the recording layer	λ^2/ 180 max.
e)	Polarization	Linear - parallel or perpendicular to the groove where appropriate
f)	Extinction ratio	0,01 max.

g) The optical power and pulse width for writing, reading and erasing, and the magnetic field shall be as specified in 20.2.2, 25.2.2, 25.3, 25.4 and 29.2.2.

D is the diameter of the lens aperture and W is the beam diameter of the Gaussian beam where the intensity is $1/e^2$ of the maximum intensity.

The extinction ratio is the ratio of the minimum over the maximum power observed behind a linear polarizer in the optical beam, which is rotated over at least 180°.

9.3 Read channels

Two read channels shall be provided to generate signals from the marks in the recording layer. Channel 1 shall be used for reading the embossed marks, using the diffraction of the optical beam by the marks. Channel 2 shall be used for reading the user-written marks, using the rotation of the polarization of optical beam due to the magneto-optical effect of the marks. The read amplifiers after the photo-detectors in Channel 1 and Channel 2 shall have a flat response within ±1 dB from 100 Hz to 25 MHz.

The signal from Channel 2 is not equalized before detection. The signal should be low-pass filtered with a 3-pole Butterworth filter with a cut-off frequency of one half the Channel clock frequency.

9.4 Tracking

The Tracking Channel of the drive provides the tracking error signals to control the servos for the axial and radial tracking of the optical beam. The method of generating the axial tracking error is not specified for the Reference Drive. The radial tracking error is generated by a split photodiode detector in the tracking Channel. The division of the diode runs parallel to the image of the tracks on the diode.

The requirements for the accuracy with which the focus of the optical beam must follow the tracks is specified in 20.2.4.

9.5 Rotation of the disk

The spindle shall position the disk as specified in 12.4. It shall rotate the disk at 50,0 Hz ± 0,5 Hz. The direction of rotation shall be as specified in 10.5.8.

Copyright International Organization for Standardization
Provided by IHS under license with ISO
No reproduction or networking permitted without license from IHS Not for Resale

Section 2 : Mechanical and physical characteristics

10 Dimensional and physical characteristics of the case

10.1 General description of the case

The case (see figure 3) is a rigid protective container of rectangular shape. It has spindle windows on both sides to allow the spindle of the drive to clamp the disk by its hub. Both sides of the case have a head window, one for the optical head of the drive, the other for the magnetic head providing the necessary magnetic fields, which also allow for simultaneous read and write of both sides of the media. A shutter uncovers the windows upon insertion into the drive, and automatically covers them upon removal from the drive. The case has write-inhibit, reflectance detection, and rotation direction detection features, and gripper slots for an autochanger.

10.2 Relationship of Sides A and B

The features essential for physical interchangeability are represented in figure 3. When Side A of the cartridge faces upwards, Side A of the disk faces downwards. Sides A and B of the case are identical as far as the features given here are concerned, except as noted below. The description is given for one side only. References to Sides A and B can be changed to B or A respectively.

Only the shutter and the slot for the shutter opener, described in 10.5.10 and 10.5.11, are not identical for both sides of the case.

10.3 Reference axes and case reference planes

There is a reference plane P for each side of the case. Each reference plane P contains two orthogonal axes X and Y to which the dimensions of the case are referred. The intersection of the X and Y axes defines the centre of the location hole. The X axis extends through the centre of the alignment hole.

10.4 Case drawings

The case is represented schematically by the following drawings.

- Figure 2 shows the hub dimensions.
- Figure 3 shows a composite drawing of Side A of the case in isometric form, with the major features identified from Side A.
- Figure 4 shows the envelope of the case with respect to a location hole at the intersection of the X and Y axes and reference plane P.
- Figure 5 shows the surfaces S1, S2, S3 and S4 which establish the reference plane P.
- Figure 5a shows the details of surface S3.
- Figure 6 shows the details of the insertion slot and detent.
- Figure 7 shows the gripper slots, used for automatic handling.
- Figure 8 shows the write-inhibit holes.
- Figure 9 shows the media ID sensor holes.
- Figure 10 shows the shutter sensor notch.
- Figure 11 shows the head and motor window.
- Figure 12 shows the shutter opening features.
- Figure 13 shows the capture cylinder.
- Figure 14 shows the user label areas.

10.5 Dimensions of the case

The dimensions of the case shall be measured in the test environment. The dimensions of the case in an operating environment can be estimated from the dimensions specified in this clause.

10.5.1 Overall dimensions

The total length of the case (see figure 4) shall be

$$L_1 = 153{,}0 \text{ mm} \pm 0{,}4 \text{ mm}$$

Copyright International Organization for Standardization
Provided by IHS under license with ISO
No reproduction or networking permitted without license from IHS Not for Resale

The distance from the top of the case to the reference axis X shall be

$$L_2 = 127{,}0 \text{ mm} \pm 0{,}3 \text{ mm}$$

The distance from the bottom of the case to the reference axis X shall be

$$L_3 = 26{,}0 \text{ mm} \pm 0{,}3 \text{ mm}$$

The total width of the case shall be

$$L_4 = 135{,}0 \text{ mm} \begin{matrix} +\,0{,}0 \text{ mm} \\ -\,0{,}6 \text{ mm} \end{matrix}$$

The distance from the left-hand side of the cartridge to the reference axis Y shall be

$$L_5 = 128{,}5 \text{ mm} \begin{matrix} +\,0{,}0 \text{ mm} \\ -\,0{,}5 \text{ mm} \end{matrix}$$

The distance from the right-hand side of the cartridge to the reference axis Y shall be

$$L_6 = 6{,}5 \text{ mm} \pm 0{,}2 \text{ mm}$$

The width shall be reduced on the top by the radius

$$R_1 = L_4$$

originating from a point defined by L_5 and

$$L_7 = 101{,}0 \text{ mm} \pm 0{,}3 \text{ mm}$$

The two corners of the top shall be rounded with a radius

$$R_2 = 1{,}5 \text{ mm} \pm 0{,}5 \text{ mm}$$

and the two corners at the bottom with a radius

$$R_3 = 3{,}0 \text{ mm} \pm 1{,}0 \text{ mm}$$

The thickness of the case shall be

$$L_8 = 11{,}00 \text{ mm} \pm 0{,}30 \text{ mm}$$

The eight long edges of the case shall be rounded with a radius

$$R_4 = 1{,}0 \text{ mm max.}$$

10.5.2 Location hole

The centre of the location hole (see figure 4) shall coincide with the intersection of the reference axes X and Y. It shall have a square form with a side length of

$$L_9 = 4{,}10 \text{ mm} \begin{matrix} +\,0{,}00 \text{ mm} \\ -\,0{,}06 \text{ mm} \end{matrix}$$

held to a depth of

$$L_{10} = 1{,}5 \text{ mm (i.e. typical wall thickness)}$$

after which a cavity extends through to the alignment hole on the opposite side of the case.

The lead-in edges shall be rounded with a radius

$$R_5 = 0{,}5 \text{ mm max.}$$

Copyright International Organization for Standardization
Provided by IHS under license with ISO
No reproduction or networking permitted without license from IHS Not for Resale

10.5.3 Alignment hole

The centre of the alignment hole (see figure 4) shall lie on reference axis X at a distance of

$$L_{11} = 122{,}0 \text{ mm} \pm 0{,}2 \text{ mm}$$

from the reference axis Y.

The dimensions of the hole shall be

$$L_{12} = 4{,}10 \text{ mm}^{+0{,}00 \text{ mm}}_{-0{,}06 \text{ mm}}$$

and

$$L_{13} = 5{,}0 \text{ mm}^{+0{,}2 \text{ mm}}_{-0{,}0 \text{ mm}}$$

held to a depth of L_{10}, after which a cavity extends through to the location hole on the opposite side of the case.

The lead-in edges shall be rounded with radius R_5.

10.5.4 Surfaces on Reference Planes P

The reference plane P (see figures 5 and 5a) for a side of the case shall contain four surfaces (S1, S2, S3 and S4) on that side of the case, specified as follows:

- Two circular surfaces S1 and S2.

Surface S_1 shall be a circular area centred around the square location hole and have a diameter of

$$D_1 = 9{,}0 \text{ mm min.}$$

Surface S2 shall be a circular area centred around the rectangular alignment hole and have a diameter of

$$D_2 = 9{,}0 \text{ mm min.}$$

- Two elongated surfaces S3 and S4, that follow the contour of the cartridge and shutter edges.

Surfaces S3 and S4 are shaped symmetrically.

Surface S3 shall be defined by two circular sections with radii

$$R_6 = 1{,}5 \text{ mm} \pm 0{,}1 \text{ mm}$$

with an origin given by

$$L_{14} = 4{,}0 \text{ mm} \pm 0{,}1 \text{ mm}$$

$$L_{15} = 86{,}0 \text{ mm} \pm 0{,}3 \text{ mm},$$

and

$$R_7 = 1{,}5 \text{ mm} \pm 0{,}1 \text{ mm}$$

with an origin given by

$$L_{16} = 1{,}9 \text{ mm} \pm 0{,}1 \text{ mm}$$

$$L_{17} = 124{,}5 \text{ mm} \pm 0{,}3 \text{ mm}$$

The arc with radius R_7 shall continue on the right hand side with radius

$$R_8 = 134{,}0 \text{ mm}^{+0{,}2 \text{ mm}}_{-0{,}7 \text{ mm}}$$

Copyright International Organization for Standardization
Provided by IHS under license with ISO
No reproduction or networking permitted without license from IHS
Not for Resale

which is a dimension resulting from $L_5 + L_{14} + R_6$ with an origin given by L_5 and L_7. A straight, vertical line shall smoothly join the arc of R_6 to the arc of R_8.

The left-hand side of S3 shall be bounded by radius

$R_9 = 4{,}5 \text{ mm} \pm 0{,}3 \text{ mm}$

which is a dimension resulting from $L_{18} + L_{14} - R_6$ with an origin given by

$L_{18} = 2{,}0 \text{ mm} \pm 0{,}1 \text{ mm}$

$L_{19} = 115{,}5 \text{ mm} \pm 0{,}3 \text{ mm}.$

The left-hand side of the boundary shall be closed by two straight lines. The first one shall smoothly join the arc of R_6 to the arc of R_9. The second one shall run from the left hand tangent of R_7 to its intersection with R_9. Along the left hand side of surface S3 there shall be a zone to protect S3 from being damaged by the shutter. In order to keep this zone at a minimum practical width

$R_{10} = 4{,}1 \text{ mm max.}$

This radius originates from the same point as R_9.

10.5.5 Insertion slots and detent features

The case shall have two symmetrical insertion slots with embedded detent features (see figure 6). The slots shall have a length of

$L_{20} = 26{,}0 \text{ mm} \pm 0{,}3 \text{ mm}$

a width of

$$L_{21} = 6{,}0 \text{ mm} \begin{matrix} + 0{,}3 \text{ mm} \\ - 0{,}0 \text{ mm} \end{matrix}$$

and a depth of

$L_{22} = 3{,}0 \text{ mm} \pm 0{,}1 \text{ mm}$

located

$L_{23} = 2{,}5 \text{ mm} \pm 0{,}2 \text{ mm}$

from reference plane P.

The slots shall have a lead-in chamfer given by

$L_{24} = 0{,}5 \text{ mm max.}$

$L_{25} = 5{,}0 \text{ mm max.}$

The detent notch shall be a semi-circle of radius

$R_{11} = 3{,}0 \text{ mm} \pm 0{,}2 \text{ mm}$

with the origin given by

$L_{26} = 13{,}0 \text{ mm} \pm 0{,}3 \text{ mm}$

$L_{27} = 2{,}0 \text{ mm} \pm 0{,}1 \text{ mm}$

$L_{73} = 114{,}0 \text{ mm} \pm 0{,}3 \text{ mm}$

The dimensions L_2, L_{26}, L_{73} are interrelated, their values shall be such so that they are all three within specification.

Copyright International Organization for Standardization
Provided by IHS under license with ISO
No reproduction or networking permitted without license from IHS Not for Resale

10.5.6 Gripper slots

The case shall have two symmetrical gripper slots (see figure 7) with a depth of

L_{28} = 5,0 mm ± 0,3 mm

from the edge of the case and a width of

L_{29} = 6,0 mm ± 0,3 mm

The upper edge of a slot shall be

L_{30} = 12,0 mm ± 0,3 mm

above the bottom of the case.

10.5.7 Write-inhibit holes

Sides A and B shall each have a write-inhibit hole (see figure 8). The case shall include a device for opening and closing each hole. The hole at the left-hand side of Side A of the case, is the write-inhibit hole for Side A of the disk. The protected side of the disk shall be made clear by inscriptions on the case or by the fact that the device for Side A of the disk can only be operated from Side A of the case.

When writing on Side A of the disk is not allowed, the write-inhibit hole shall be open all through the case. It shall have a diameter

D_3 = 4,0 mm min.

Its centre shall be specified by

L_{31} = 8,0 mm ± 0,2 mm

L_{32} = 111,0 mm ± 0,3 mm

on Side A of the case.

When writing is allowed on Side A of the disk, the write-inhibit hole shall be closed on Side A of the case, at a depth of typically L_{10}, i.e. the wall thickness of the case. In this state, the opposite side of the same hole, at Side B of the case, shall be closed and not recessed from the reference plane P of Side B of the case by more than

L_{33} = 0,5 mm

The opposite side of the write-inhibit hole for protecting Side B of the disk shall have a diameter D_3. Its centre shall be specified by L_{31} and

L_{34} = 11,0 mm ± 0,2 mm

on Side A of the case.

10.5.8 Media sensor holes

There shall be two sets of four media sensor holes (see figure 9). The set of holes at the lower left hand corner of Side A of the case pertains to Side A of the disk. The holes shall extend through the case, and have a diameter of

$$D_4 = 4{,}0 \text{ mm}^{+0{,}3 \text{ mm}}_{-0{,}0 \text{ mm}}$$

the positions of their centres shall be specified by L_{32}, L_{34} and

L_{35} = 19,5 mm ± 0,2 mm

L_{36} = 17,0 mm ± 0,2 mm

L_{37} = 23,0 mm ± 0,2 mm

Copyright International Organization for Standardization
Provided by IHS under license with ISO
No reproduction or networking permitted without license from IHS
Not for Resale

L_{38} = 29,0 mm ± 0,2 mm

L_{39} = 93,0 mm ± 0,3 mm

L_{40} = 99,0 mm ± 0,3 mm

L_{41} = 105,0 mm ± 0,3 mm

A hole is deemed to be open when there is no obstruction in this hole over a diameter D_4 all through the case.

A hole for Side A of the disk is deemed to be closed, when the hole is closed on both Side A and Side B of the case. The closure shall be recessed from reference plane P by

L_{42} = 0,1 mm max.

The holes are numbered consecutively from 1 to 4. Number 1 is the hole closest to the left hand edge of the case.

Hole No. 1 shall indicate high reflectance of Type O-ROM disks. The hole shall be open for a Type O-ROM disk with high reflectance. The hole shall be closed for ODCs of Type R/W, P-ROM, and WO specified by this International Standard.

Hole No. 2 shall indicate whether Side B shall not be used, in which case the hole shall be open. When Side B shall be used, the hole shall be closed.

Hole No. 3 shall indicate the required direction of disk rotation. The hole shall be open to indicate that the direction of rotation as viewed from the objective lens shall be clockwise. The hole shall be closed to indicate that the direction of rotation as viewed from the objective lens shall be counter clock-wise.

An optical disk cartridge conforming to this International Standard does not use hole No. 4. The hole shall be closed. The meaning of the holes shall be as in table 1. The combinations of open and closed holes permitted according to this International Standard shall be as shown in table 2.

Table 1 - Media sensor holes

Sensor hole No.	Indication	Closed	Open
1	Reflectance range of disks	Low reflectance	High reflectance
2	Disk side accessible	Yes	No
3	Required direction of rotation of disk	Counterclock-wise	Clock-wise
4	Not used	Always	-

Copyright International Organization for Standardization
Provided by IHS under license with ISO
No reproduction or networking permitted without license from IHS
Not for Resale

Table 2 - Allowed settings of media sensor holes

Hole No. ⟶	Side A 1 2 3 4	Type of side	Side B 1 2 3 4	Type of side
	C C C C	R/W	C C C C	R/W
		R/W		P-ROM
		P-ROM		R/W
		P-ROM		P-ROM
		WO		WO
	C C C C	R/W	C C O C	R/W-R
		R/W		P-ROM-R
		P-ROM		R/W-R
		P-ROM		P-ROM-R
		WO		WO-R
	C C C C	R/W	C O C C	B
		P-ROM		B
		WO		B
	C C C C	R/W	O C C C	O-ROM
	C C C C	R/W	O C O C	O-ROM-R
	O C C C	O-ROM	O C C C	O-ROM
	O C C C	O-ROM	O C O C	O-ROM-R
	O C C C	O-ROM	C C C C	R/W
	O C C C	O-ROM	C C O C	R/W-R
	O C C C	O-ROM	C O C C	B

Legend: C = closed hole
O = open hole

10.5.9 Head and motor window

The case shall have a window on each side to enable the optical head and the motor to access the disk (see figure 11). The dimensions are referenced to a centreline, located at a distance of

L_{46} = 61,0 mm ± 0,2 mm

to the left of reference axis Y.

The width of the head access shall be

L_{47} = 20,00 mm min.

L_{48} = 20,00 mm min.

and its height shall extend from

L_{49} = 118,2 mm min. to

L_{50} = 57,0 mm max.

Copyright International Organization for Standardization
Provided by IHS under license with ISO
No reproduction or networking permitted without license from IHS
Not for Resale

The four inside corners shall be rounded with a radius of

R_{12} = 3,0 mm max.

The motor access has a diameter of

D_5 = 35,0 mm min.

and its centre shall be defined by L_{46} and

L_{51} = 43,0 mm ± 0,2 mm

10.5.10 Shutter

The case shall have a spring-loaded, unidirectional shutter (see figure 12) with an optional latch, designed to completely cover the head and motor windows when closed. A shutter movement of 41,5 mm minimum shall be sufficient to ensure that the head and motor window is opened to the minimum size specified in 10.5.9. The shutter shall be free to slide in a recessed area of the case in such a way as to ensure that the overall thickness of the case and shutter shall not exceed L_8. The right-hand side of the top of the shutter shall have a lead-in ramp with an angle

A_2 = 16° max.

The distance from the reference planes P to the nearest side of the ramp shall be

L_{52} = 2,5 mm max.

The left hand side of the shutter shall not extend closer than

L_{52B} = 14,0 mm min.

to the datum plane.

10.5.11 Slot for shutter opener

The shutter shall have only one slot (see figure 12) in which the shutter opener of the drive can engage to open the shutter. The slot shall be dimensioned as follows: When the shutter is closed, the vertical edge used to push the shutter open shall be located at a distance of

L_{53} = 34,5 mm ± 0,5 mm

from reference axis Y on Side B of the case.

The length of the slot shall be

L_{54} = 4,5 mm ± 0,1 mm

and the angle of the lead-out ramp shall be

A_3 = 52,5° ± 7,5°.

The depth of the slot shall be

L_{55} = 3,5 mm ± 0,1 mm

The width of the slot from the reference plane P of Side B of the case shall be

$L_{56} = 6{,}0\ \text{mm}^{+0{,}5\ \text{mm}}_{-0{,}0\ \text{mm}}$

If a shutter latch is employed, the distance between the latch and reference plane P of Side B of the case shall be

L_{57} = 2,5 mm max.

The edges of the case beneath the shutter, upon which the shutter door opening mechanism may slide, shall have a thickness of

B_1 = 1,0 mm min.

Copyright International Organization for Standardization
Provided by IHS under license with ISO
No reproduction or networking permitted without license from IHS Not for Resale

located at

B_2 = 0,9 mm max.

from plane P (see detail A in figure 12).

The edges shall also be straight to within STR (straightness of surface) = 0,2 mm in both planes for length C_1. (See detail in figure 12. C_1 is defined by the manufacturer's shutter design).

10.5.12 Shutter sensor notch

The shutter sensor notch (see figure 10) is used to ensure that the shutter is fully open after insertion of the optical disk cartridge into the drive. Therefore, the notch shall be exposed only when the shutter is fully open. The dimensions shall be

L_{43} = 3,5 mm ± 0,2 mm

L_{44} = 71,0 mm ± 0,3 mm and

$L_{45} = 9{,}0\ \text{mm}\ {}^{+\ 0{,}0\ \text{mm}}_{-\ 2{,}0\ \text{mm}}$

The notch shall have a lead-out ramp with an angle

$A_1 = 45° \pm 2°$

10.5.13 User label areas

The case shall have the following minimum areas for user labels (see figure 14):

- on Side A and Side B: 35,0 mm x 65,0 mm
- on the bottom side: 6,0 mm x 98,0 mm

These areas shall be recessed by 0,2 mm min. Their positions are specified by the following dimensions and relations between dimensions.

L_{61} = 4,5 mm min.

$L_{62} - L_{61}$ = 65,0 mm min.

$L_{64} - L_{63}$ = 35,0 mm min.

L_{65} = 4,5 mm min.

$L_{66} - L_{65}$ = 65,0 mm min.

$L_{67} + L_{68}$ = 35,0 mm min.

$L_8 - L_{71} - L_{72}$ = 6,0 mm min.

$L_4 - L_{69} - L_{70}$ = 98,0 mm min.

10.6 Mechanical characteristics

All requirements of this clause shall be met in the operating environment.

10.6.1 Materials

The case shall be constructed from any suitable materials such that it meets the requirements of this International Standard.

10.6.2 Mass

The mass of the case without the optical disk shall not exceed 150 g.

10.6.3 Edge distortion

The cartridge shall meet the requirement of the edge distortion test defined in annex B.

Copyright International Organization for Standardization
Provided by IHS under license with ISO
No reproduction or networking permitted without license from IHS
Not for Resale

10.6.4 Compliance

The cartridge shall meet the requirement of the compliance (flexibility) test defined in annex C. The requirement guarantees that a cartridge can be constrained in the proper plane of operation within the drive.

10.6.5 Shutter opening force

The spring force on the shutter shall be such that the force required to open the shutter does not exceed 3 N.

It shall be sufficiently strong to close a free-sliding shutter, irrespective of the orientation of the case.

10.7 Drop test

The optical disk cartridge shall withstand dropping on each surface and on each corner from a height of 760 mm on to a concrete floor covered with a vinyl layer 2 mm thick. The cartridge shall withstand all such impacts without any functional failure.

11 Dimensional, mechanical and physical characteristics of the disk

11.1 General description of the disk

The disk shall consist of two sides assembled together.

Each disk side shall consist of a circular substrate with a hub on one face and a recording layer coated on the other face. The recording layer may be protected from environmental influences by a protective layer. The Formatted Zone (see clause 17) of the substrate shall be transparent to allow an optical beam to focus on the recording layer through the substrate.

The two disk sides shall be assembled together with the recording layer facing inwards.

The circular hubs are in the centre of the disk. They interact with the spindle of the drive, and provide the radial centring of the clamping force.

11.2 Reference axis and plane of the disk

Some dimensions of the hub are referred to a Disk Reference Plane P (see figure 2). The Disk Reference Plane P is different from that described in 10.3 for the cartridge. P is defined by the perfectly flat annular surface of an ideal spindle onto which the clamping zone of the disk is clamped, and which is normal to the axis of rotation of this spindle. This axis A passes through the centre of the centre hole of the hub, and is normal to Disk Reference Plane P.

11.3 Dimensions of the disk

The dimensions of the disk shall be measured in the test environment. The dimensions of the disk in an operating environment can be estimated from the dimensions specified in this clause.

The outer diameter of the disk shall be 130,0 mm nominal. The tolerance is determined by the movement of the disk inside the case allowed by 12.3 and 12.4.

The total thickness of the disk outside the hub area shall be 2,40 mm min. and 2,80 mm max.

NOTE 5 - Disks that conform to ISO/IEC 10089 are known to exist which have a total thickness of 3,2 mm.

Within the zone defined by the outer diameter of the clamping zone (*D*6) and the inner diameter of the reflective zone (see clause 17) there shall be no projection from the Disk Reference Plane P in the direction of the optical system of more than 0,2 mm.

11.3.1 Hub dimension

The outer diameter of the hub (see figure 2) shall be

$$D_8 = 25{,}0 \text{ mm}\ {}^{+\ 0{,}0 \text{ mm}}_{-\ 0{,}2 \text{ mm}}$$

The height of the hub shall be

Copyright International Organization for Standardization
Provided by IHS under license with ISO
No reproduction or networking permitted without license from IHS
Not for Resale

$$h_1 = 2{,}2 \text{ mm} \begin{matrix} +0{,}0 \text{ mm} \\ -0{,}2 \text{ mm} \end{matrix}$$

The diameter of the centre hole of the hub shall be

$$D_9 = 4{,}004 \text{ mm} \begin{matrix} +0{,}012 \text{ mm} \\ -0{,}000 \text{ mm} \end{matrix}$$

The height of the top of the centring hole at diameter D_9, measured above the Disk Reference Plane P, shall be

$$h_2 = 1{,}9 \text{ mm min.}$$

The centring length at diameter D_9 shall be

$$h_3 = 0{,}5 \text{ mm min.}$$

The hole shall have a diameter larger than, or equal to, D_9 between the centring length and the Disk Reference Plane P. The hole shall extend through the substrate.

There shall be a radius at the rim of the hub at diameter D_9 with height

$$h_4 = 0{,}2 \text{ mm} \pm 0{,}1 \text{ mm}$$

At the two surfaces which it intersects, the radius shall be blended to prevent offsets or sharp ridges.

The height of the chamfer at the rim of the hub at diameter D_8 shall be

$$h_5 = 0{,}2 \text{ mm} \begin{matrix} +0{,}2 \text{ mm} \\ -0{,}0 \text{ mm} \end{matrix}$$

The angle of the chamfer shall be 45°, or a corresponding full radius shall be used.

The outer diameter if the magnetizable ring shall be

$$D_{10} = 19{,}0 \text{ mm min.}$$

The inner diameter of the magnetizable ring shall be

$$D_{11} = 8{,}0 \text{ mm max.}$$

This thickness of the magnetizable material shall be

$$h_6 = 0{,}5 \text{ mm min.}$$

The position of the top of the magnetizable ring relative to the Disk Reference Plane P shall be

$$h_7 = 2{,}2 \text{ mm} \begin{matrix} +0{,}0 \text{ mm} \\ -0{,}1 \text{ mm} \end{matrix}$$

The outer diameter of the clamping zone shall be

$$D_6 = 35{,}0 \text{ mm min.}$$

The inner diameter of the zone shall be

$$D_7 = 27{,}0 \text{ mm max.}$$

11.4 Mechanical characteristics

All requirements in this clause must be met in the operating environment.

11.4.1 Material

The disk shall be made from any suitable materials such that it meets the requirements of this International Standard. The only material properties specified by this International Standard are the magnetic properties of the magnetizable zone in the hub (see 11.3.1) and the optical properties of the substrate in the Formatted Zone (see 11.5).

Copyright International Organization for Standardization
Provided by IHS under license with ISO
No reproduction or networking permitted without license from IHS
Not for Resale

11.4.2 Mass

The mass of the disk shall not exceed 120 g.

11.4.3 Moment of inertia

The moment of inertia of the disk relative to axis A shall not exceed 0,22 g·m^2.

11.4.4 Imbalance

The imbalance of the disk relative to axis A shall not exceed 0,01 g·m.

11.4.5 Axial deflection

The axial deflection of the disk is measured as the axial deviation of the recording layer. Thus it comprises the tolerances on the thickness of the substrate, on its index of refraction and the deviation of the entrance surface from the Disk Reference Plane P on each side of the disk. The nominal position of the recording layer with respect to the Disk Reference Plane P on each side of the disk is determined by the nominal thickness of the substrate.

The deviation of any point of the recording layer from its nominal position, in a direction normal to the Disk Reference Plane, shall not exceed ± 0,22 mm for rotational frequencies of the disk as specified in 9.5. For Type - R disks, this requirement shall also be met for each side of the disk when measured with the disk accessed from both sides. The deviation shall be measured by the optical system defined in clause 9.

11.4.6 Axial acceleration

The maximum allowed axial error e_{max}(see annex T) shall not exceed ± 1,0 µm, measured using the Reference Drive for axial tracking of the recording layer. The rotational frequency of the disk shall be as specified in 9.5. The stationary part of the motor is assumed to be motionless (no external disturbances). The measurement shall be made using a servo with the transfer function

$$H_s(i\omega) = \frac{1}{3} \times \left(\frac{\omega_0}{i\omega} \right)^2 \times \frac{1 + \dfrac{3i\omega}{\omega_0}}{1 + \dfrac{i\omega}{3\omega_0}}$$

where

$\omega = 2\pi f$

$\omega_0/2\pi$ = 1 600 Hz

$i = \sqrt{-1}$

or any other servo with $|1+H|$ within 20% of $|1+H_s|$ in the bandwidth of 50 Hz to 170 kHz. Thus, the disk shall not require an acceleration of more than 33,4 m/s^2 at low frequencies from the servo motor of the Reference Servo. For Type - R disks, this requirement shall also be met for each side of the disk when measured with the disk accessed from both sides.

11.4.7 Radial runout

The radial runout of the tracks in the recording layer in the Information zone is measured as seen by the optical head of the Reference Drive. Thus it includes the distance between the axis of rotation of the spindle and reference axis A, the tolerances on the dimensions between axis A and the location of the track, and effects of non-uniformity's in the index of refraction.

The difference between the maximum and the minimum distance of any track from the axis of rotation, measured along a fixed radial line over one physical track of the disk, shall not exceed 50 µm as measured by the optical system under conditions of a hub mounted on a perfect sized test fixture shaft, for rotational frequencies of the disk as specified in 9.5. For Type - R disks, this requirement shall also be met for each side of the disk when measured with the disk accessed from both sides.

Copyright International Organization for Standardization
Provided by IHS under license with ISO
No reproduction or networking permitted without license from IHS Not for Resale

11.4.8 Radial acceleration

The maximum allowed radial error e_{max} (see annex T) shall not exceed ± 0,15 µm, measured using the Reference Drive for radial tracking of the tracks. The rotational frequency of the disk shall be as specified in 9.5. The stationary part of the motor is assumed to be motionless (no external disturbances). The measurement shall be made using a servo with the transfer function

$$H_s(i\omega) = \frac{1}{3} \times \left(\frac{\omega_0}{i\omega} \right)^2 \times \frac{1 + \dfrac{3i\omega}{\omega_0}}{1 + \dfrac{i\omega}{3\omega_0}}$$

where

$\omega = 2\pi f$

$\omega_0/2\pi = 2\,050$ Hz

$i = \sqrt{-1}$

or any other servo with $|1+H|$ within 20% of $|1+H_s|$ in the bandwidth of 50 Hz to 170 kHz. Thus, the disk shall not require an acceleration of more than 8,3 m/s^2 at low frequencies from the servo motor of the Reference Servo. For Type - R disks, this requirement shall also be met for each side of the disk when measured with the disk accessed from both sides.

11.4.9 Tilt

The tilt angle, defined as the angle which the normal to the entrance surface, averaged over a circular area of 1 mm diameter, makes with the normal to the Disk Reference Plane P, shall not exceed 4 mrad in the operating environment. For Type - R disks, this requirement shall also be met for each side of the disk when measured with the disk accessed from both sides.

11.5 Optical characteristics

11.5.1 Index of refraction

Within the Formatted Zone (see clause 17) the index of refraction of the substrate shall be within the range from 1,46 to 1,60.

11.5.2 Thickness

The thickness of the substrate from the entrance surface to the recording layer, within the Formatted Zone shall be:

$$0{,}509\,3 \times \frac{n^3}{n^2 - 1} \times \frac{n^2 + 0{,}265\,0}{n^2 + 0{,}592\,9}\ \text{mm} \pm 0{,}05\ \text{mm}$$

where n is the index of refraction.

11.5.3 Birefringence

The effect of the birefringence of the substrate is included in the measurement of the imbalance of the signals in Channel 2 of the Reference Drive (see 25.2).

11.5.4 Reflectance

The baseline reflectance R is the value of the reflectance of an unrecorded, ungrooved area of the PEP Zone, measured through the substrate and does not include the reflectance of the entrance surface.

The nominal value R of the baseline reflectance shall be specified by the manufacturer

- in byte 3 of the Control Track PEP Zone (see 17.3.2.1.4), and

- in byte 19 of the Control Track SFP Zone (see 17.4.2).The actual value R_m of the reflectance shall be measured under the conditions a) to f) of 9.2 and those of 20.2.2.

Copyright International Organization for Standardization
Provided by IHS under license with ISO
No reproduction or networking permitted without license from IHS
Not for Resale

In any ungrooved, unrecorded area of the Control Track PEP Zone, the value R_m shall be within R (1 ± 0,12), and both R and R_m shall be within the range 0,14 to 0,29 for low reflectance disks, and within the range 0,50 to 0,90 for high reflectance disks.

12 Interface between cartridge and drive

12.1 Clamping method

When the cartridge is inserted into the drive, the shutter of the case is opened and the drive spindle engages the disk. The disk is held against the spindle by an axial clamping force, provided by the magnetizable material in the hub and the magnets in the spindle. The radial positioning of the disk is provided by the centring of the axis of the spindle in the centre hole of the hub. A turntable of the spindle shall support the disk in its clamping zone, determining the axial position of the disk in the case.

12.2 Clamping force

The clamping force exerted by the spindle shall be less than 14 N.

The adsorbent force measured by the test device specified in annex D shall be in the range of 8,0 N to 12,0 N.

12.3 Capture cylinder (see figure 13)

The capture cylinder is defined as the volume in which the spindle can expect the centre of the hole of the hub to be at the maximum height of the hub, just prior to capture. The size of the cylinder limits the allowable play of the disk inside its cavity in the case. This cylinder is referred to perfectly located and perfectly sized alignment and location pins in the drive, and includes tolerances of dimensions of the case and the disk between the two pins mentioned and the centre of the hub. The bottom of the cylinder is parallel to the Disk Reference Plane P, and shall be located at a distance of

L_{58} = 0,5 mm min.

above the Disk Reference Plane P of Side B of the case when Side A of the disk is to be used. The top of the cylinder shall be located at a distance of

L_{59} = 4,3 mm max.

above the same Disk Reference Plane P, i.e. that of Side B. The diameter of the cylinder shall be

D_{12} = 3,0 mm max.

Its centre shall be defined by the nominal values of L_{46} and L_{51}.

12.4 Disk position in the operating condition

When the disk is in the operating condition (see figure 13) within the drive, the position of the active recording layer shall be

L_{60} = 5,35 mm ± 0,15 mm

above the Disk Reference Plane P of that side of the case that faces the optical system. Moreover, the torque to be exerted on the disk in order to maintain a rotational frequency of 50 Hz shall not exceed 0,01 Nm, when the axis of rotation is within a circle of diameter

D_{13} = 0,2 mm max.

and a centre given by the nominal values of L_{46} and L_{51}.

Copyright International Organization for Standardization
Provided by IHS under license with ISO
No reproduction or networking permitted without license from IHS Not for Resale

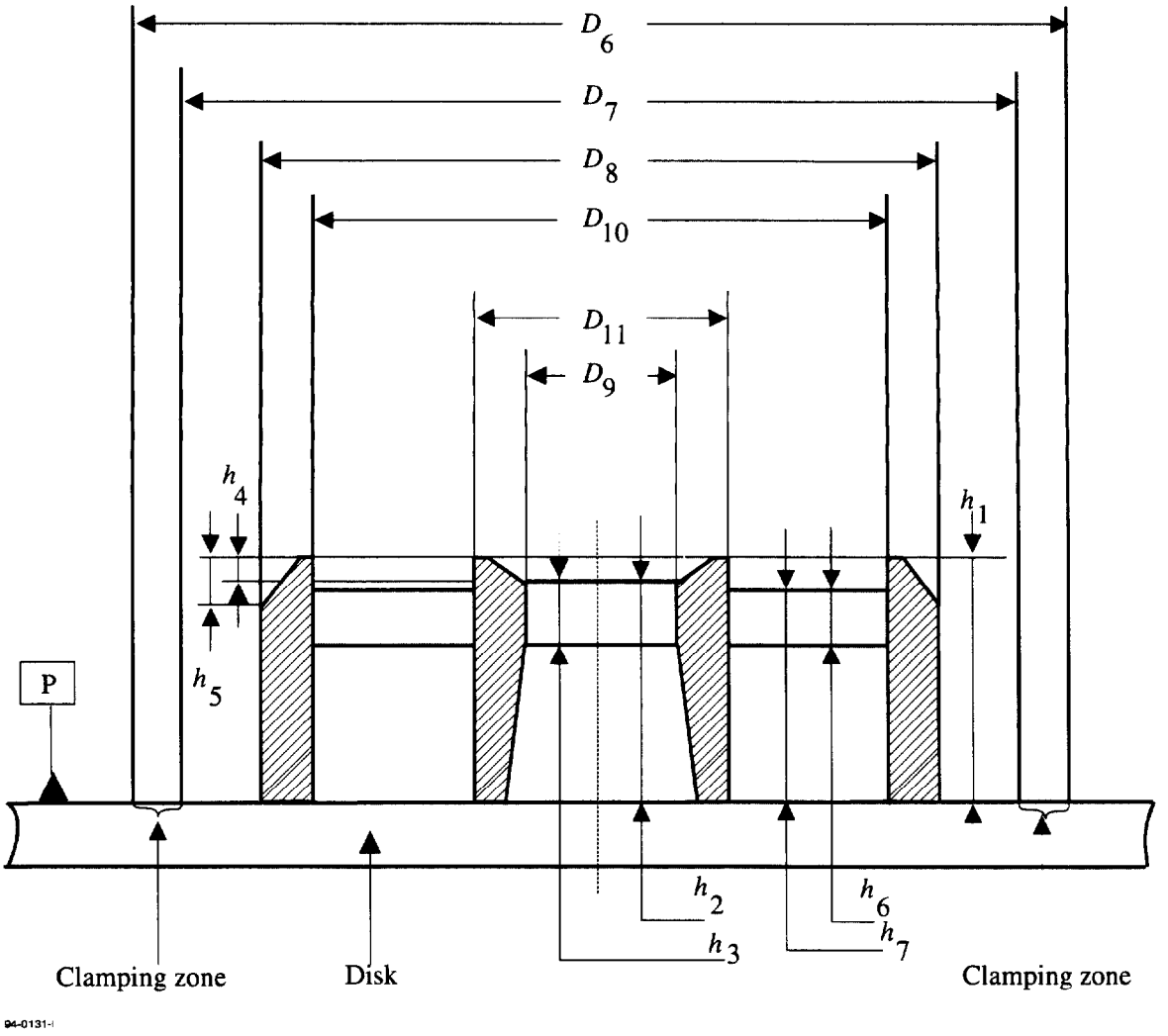

Figure 2 - Hub dimensions

Copyright International Organization for Standardization
Provided by IHS under license with ISO
No reproduction or networking permitted without license from IHS
Not for Resale

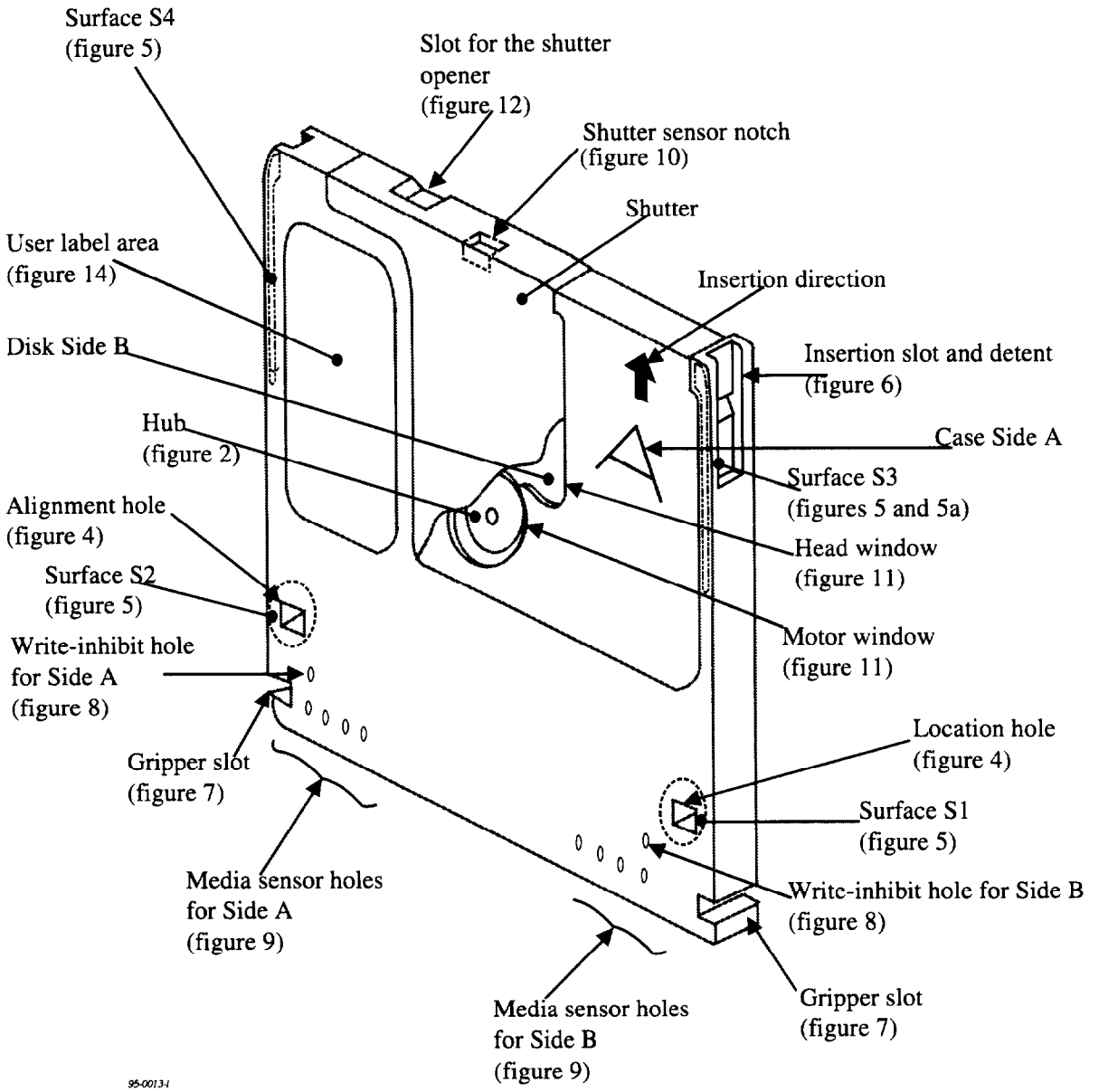

Figure 3 - Case

Copyright International Organization for Standardization
Provided by IHS under license with ISO
No reproduction or networking permitted without license from IHS
Not for Resale

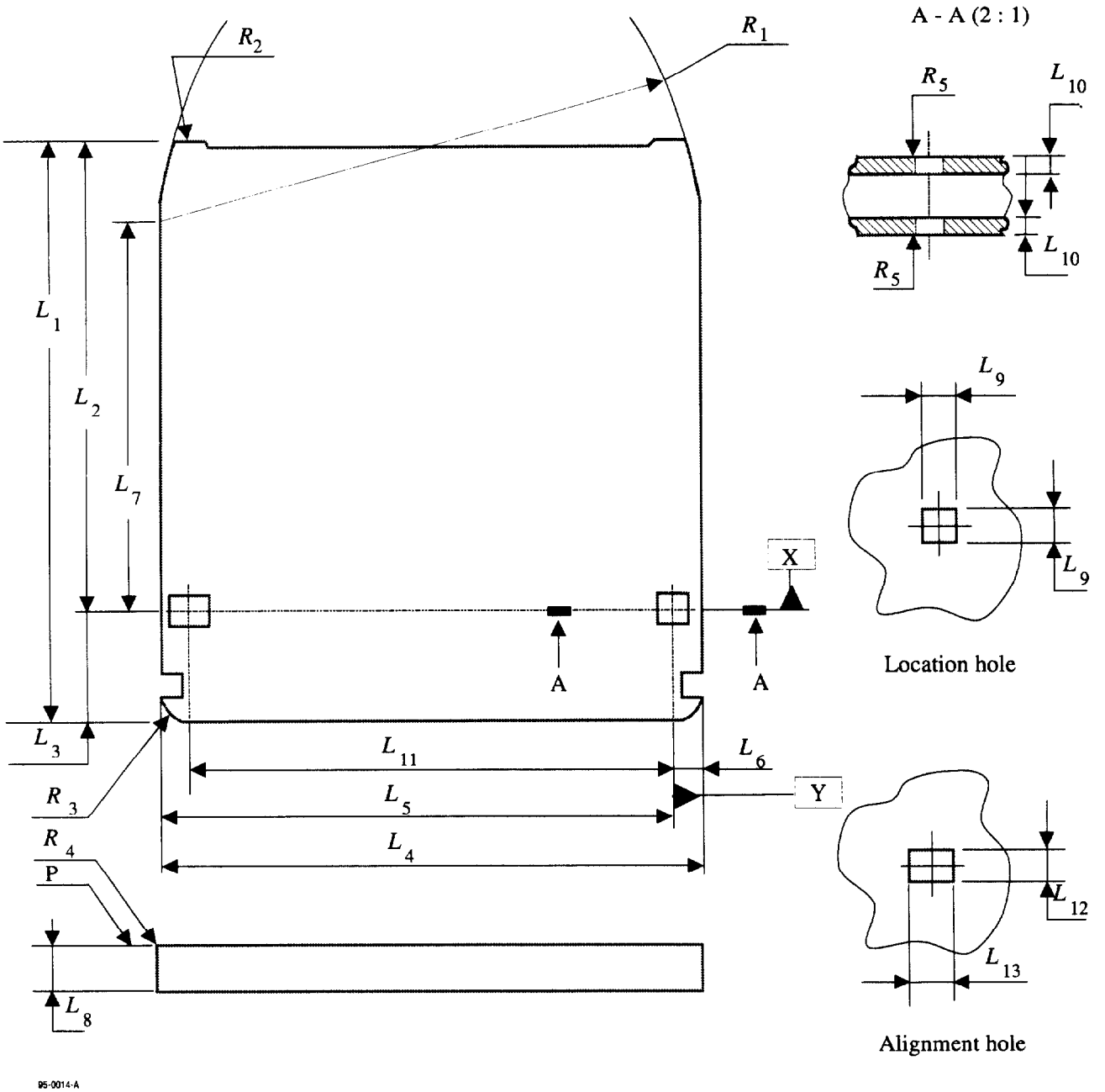

Figure 4 - Overall dimensions and reference axes

Copyright International Organization for Standardization
Provided by IHS under license with ISO
No reproduction or networking permitted without license from IHS
Not for Resale

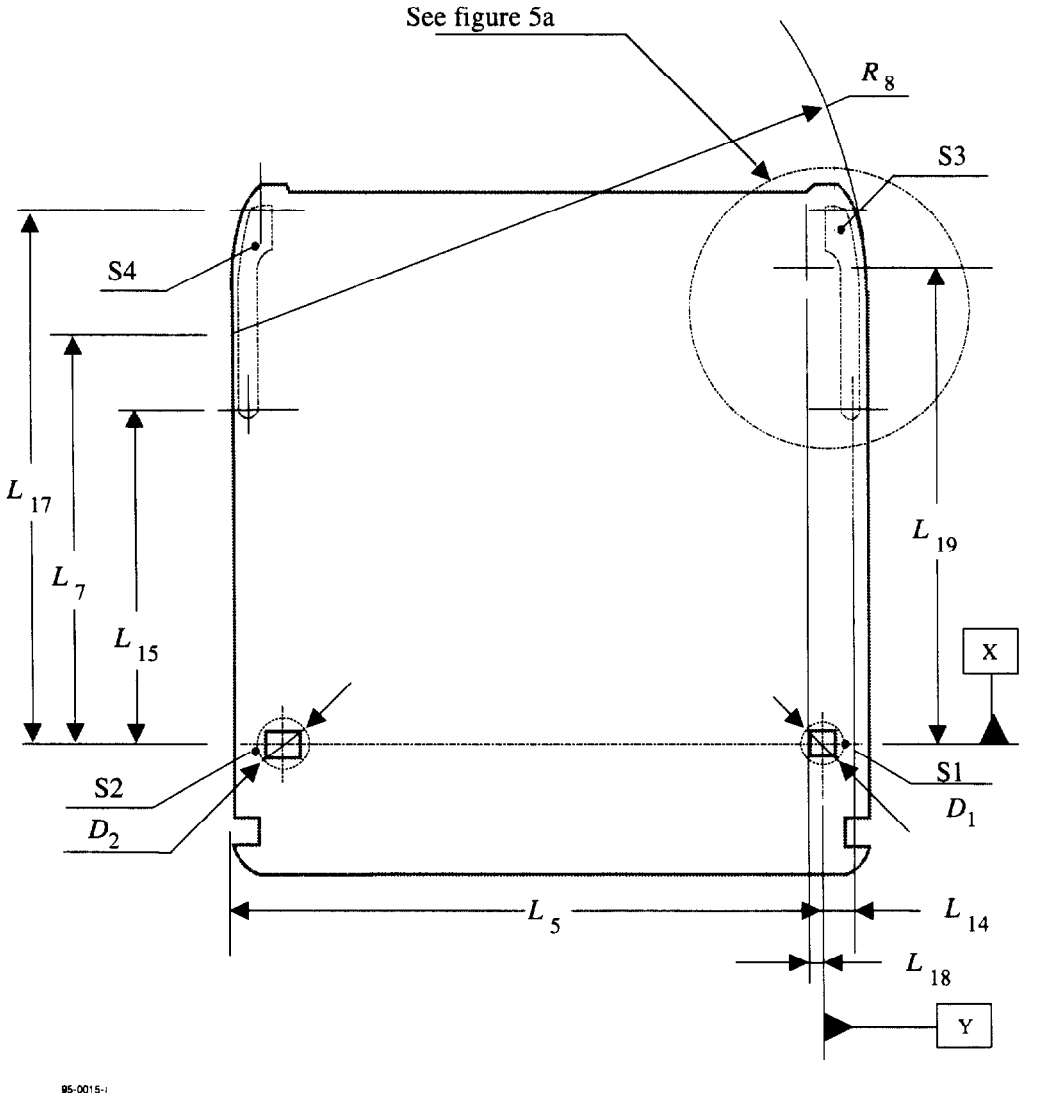

Figure 5 - Surfaces S1, S2, S3 and S4 of the reference plane P

Copyright International Organization for Standardization
Provided by IHS under license with ISO
No reproduction or networking permitted without license from IHS
Not for Resale

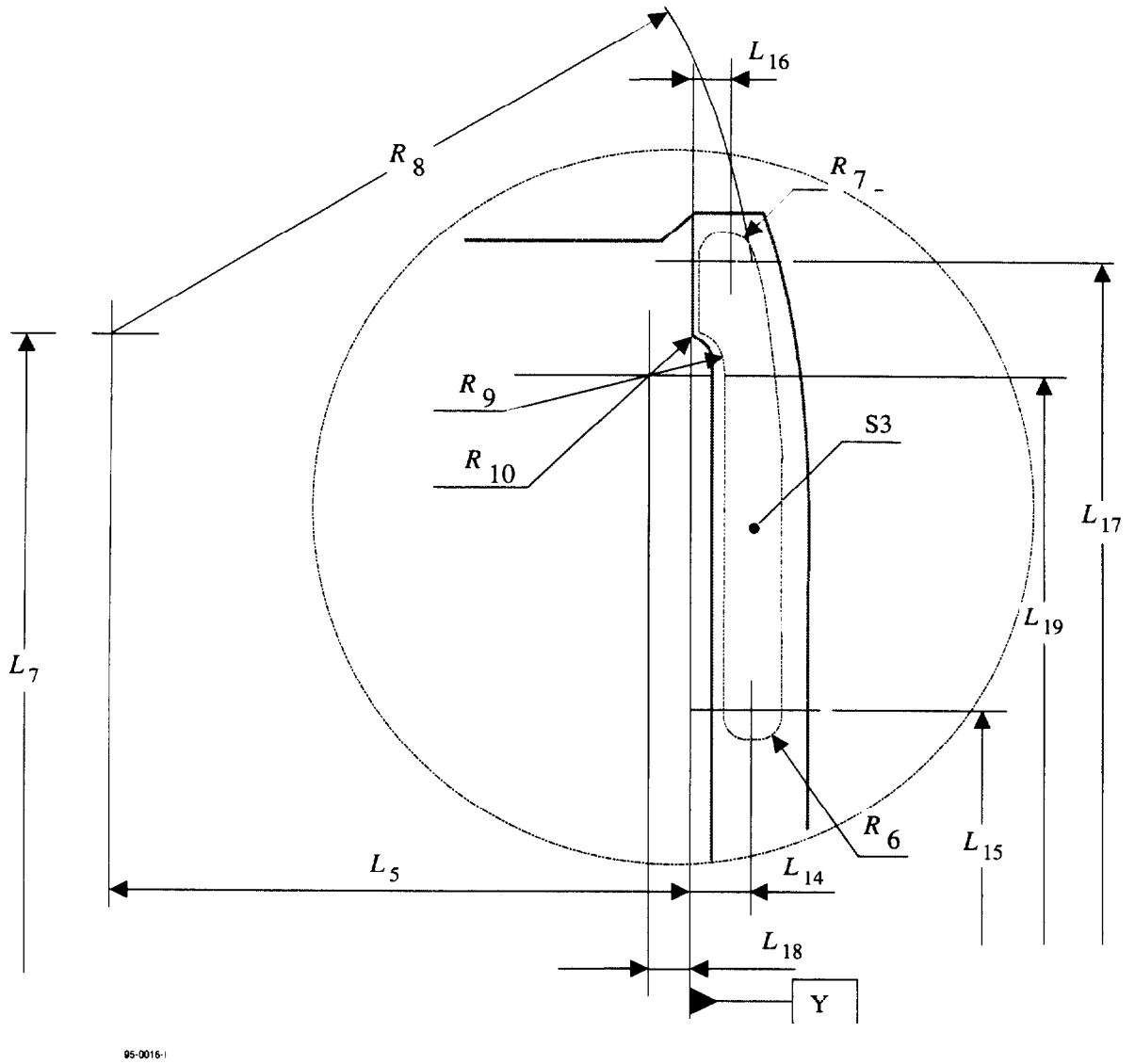

Figure 5a - Detail of surface S3

Copyright International Organization for Standardization
Provided by IHS under license with ISO
No reproduction or networking permitted without license from IHS
Not for Resale

©ISO/IEC

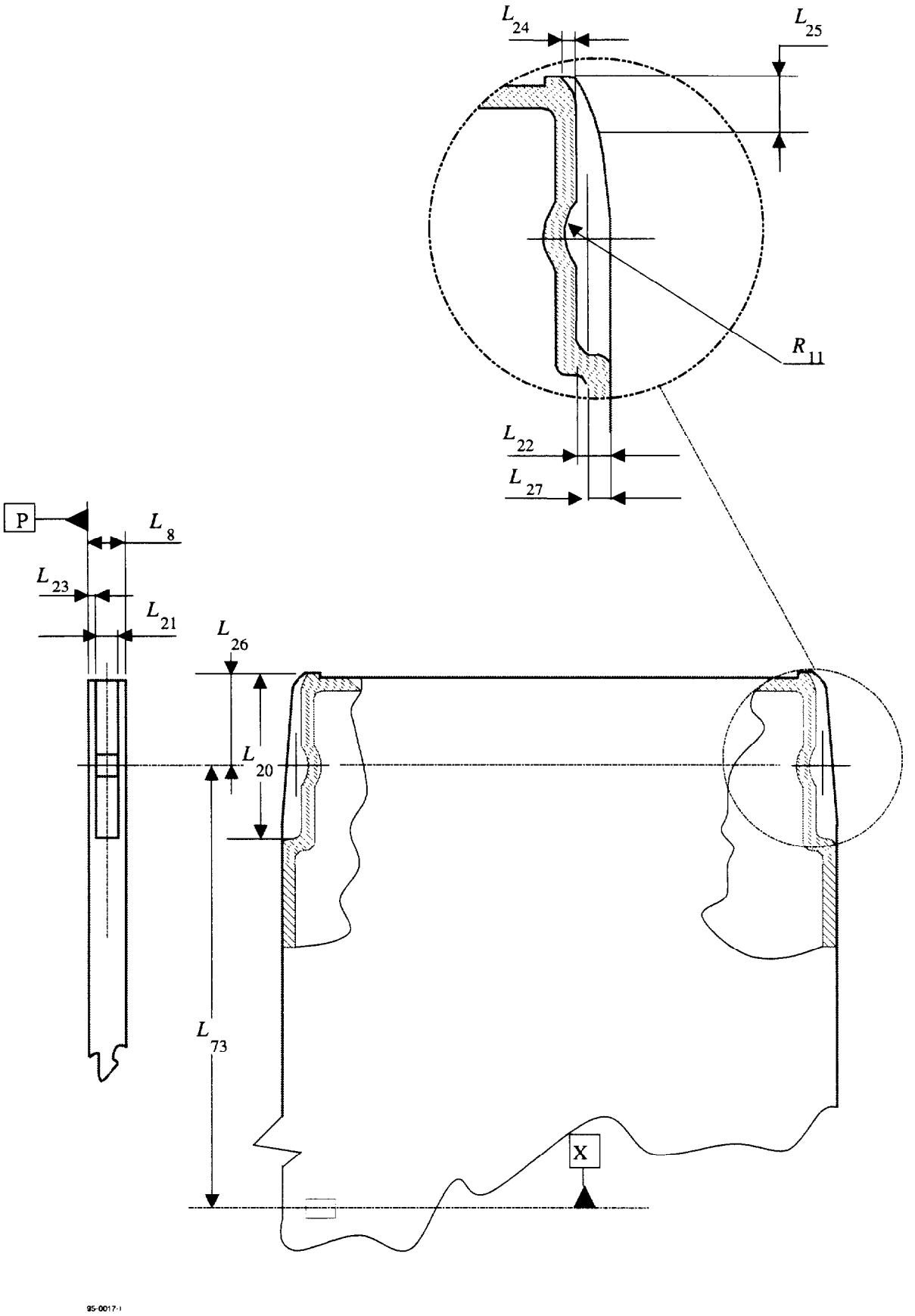

Figure 6 - Insertion slot and detent

Copyright International Organization for Standardization
Provided by IHS under license with ISO
No reproduction or networking permitted without license from IHS
Not for Resale

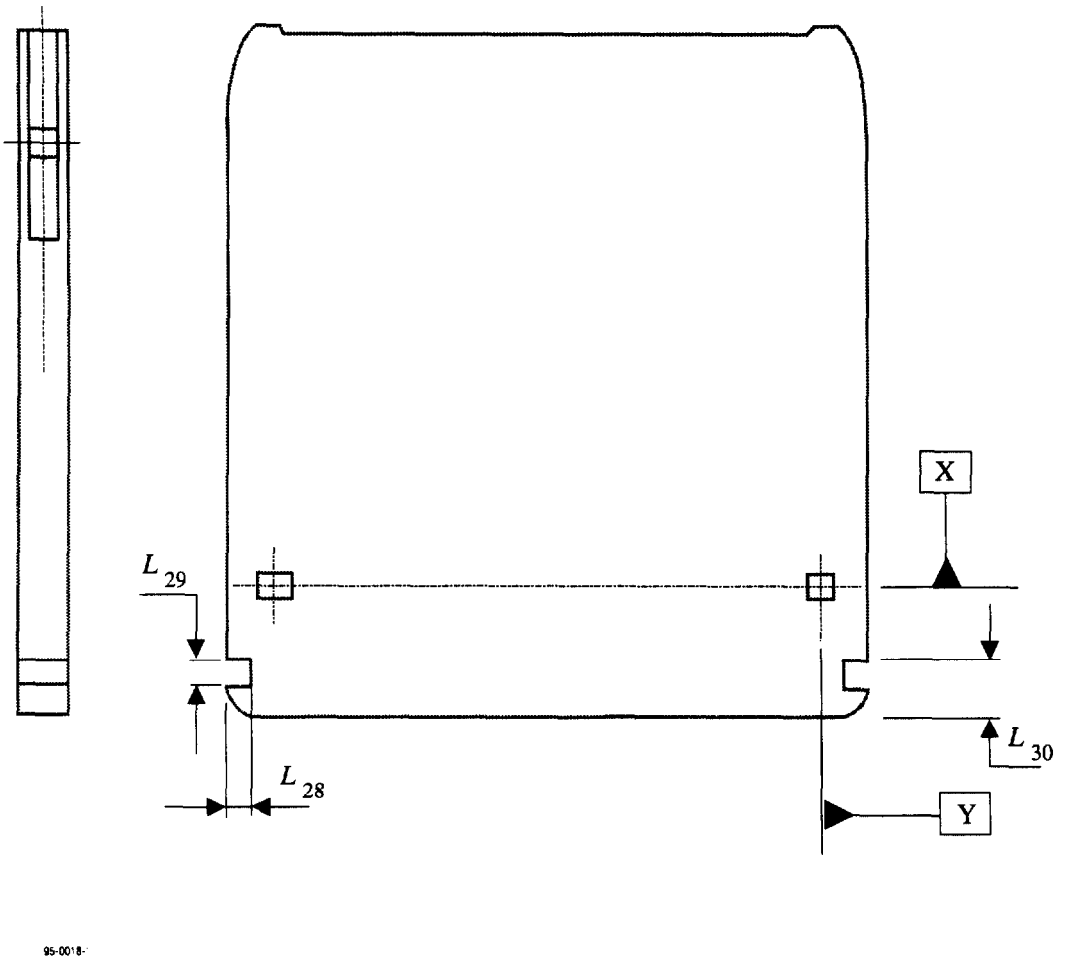

Figure 7 - Gripper slots

Copyright International Organization for Standardization
Provided by IHS under license with ISO
No reproduction or networking permitted without license from IHS
Not for Resale

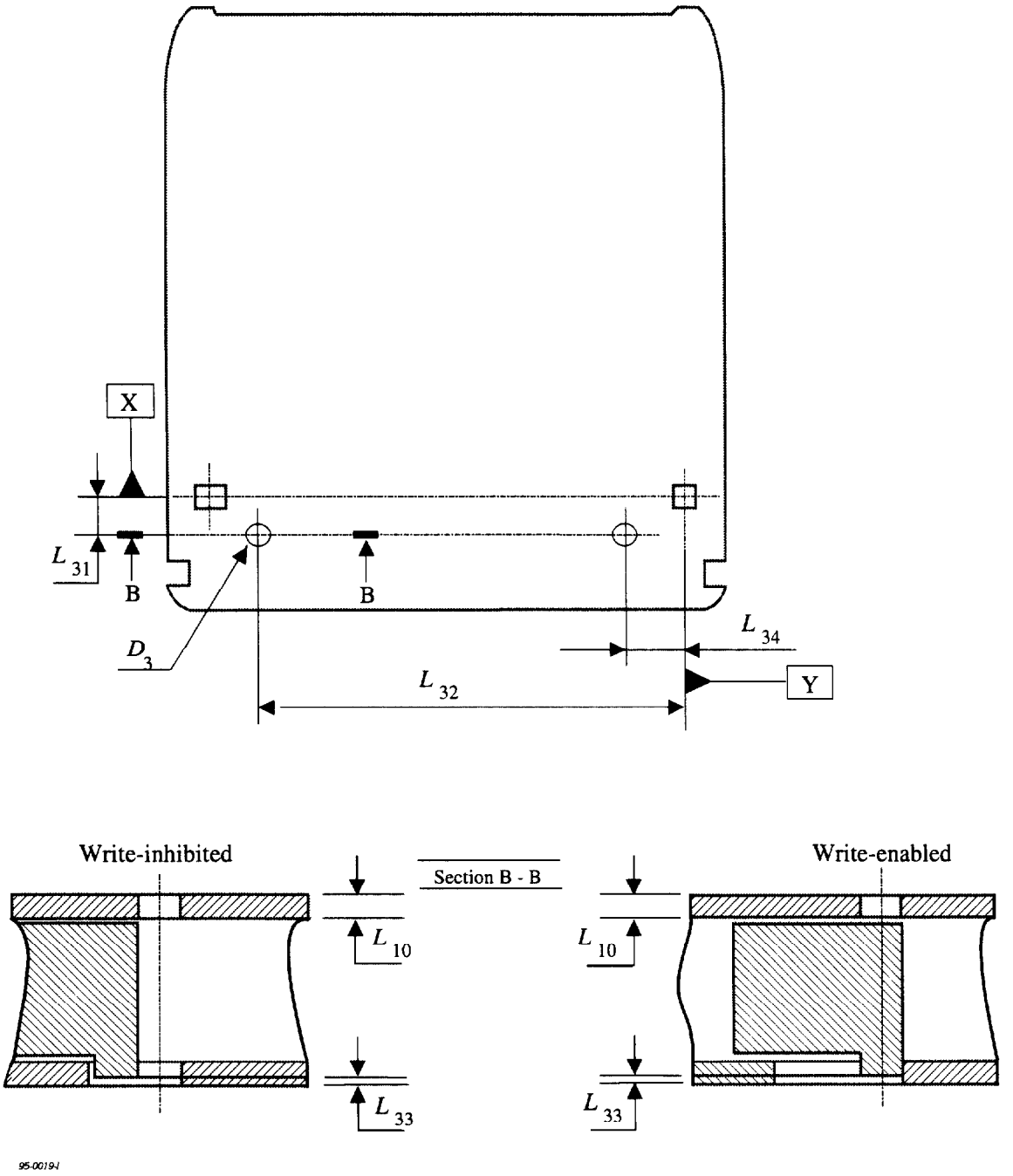

Figure 8 - Write-Inhibit holes

Copyright International Organization for Standardization
Provided by IHS under license with ISO
No reproduction or networking permitted without license from IHS
Not for Resale

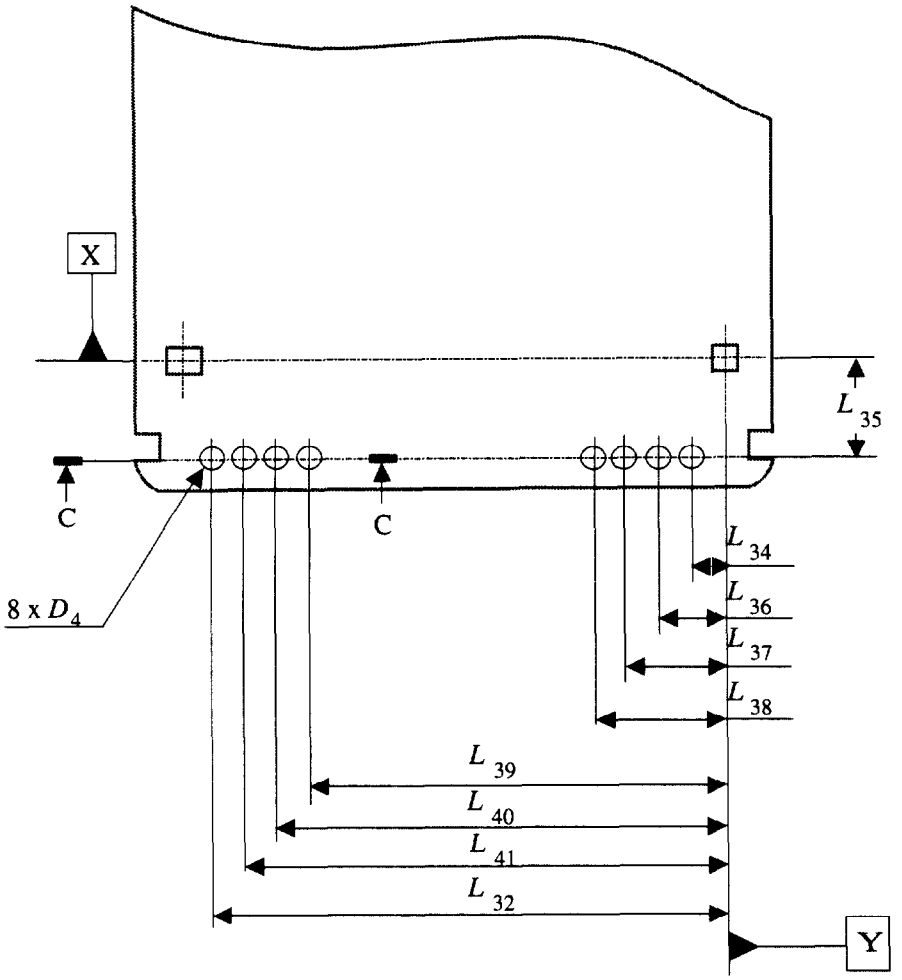

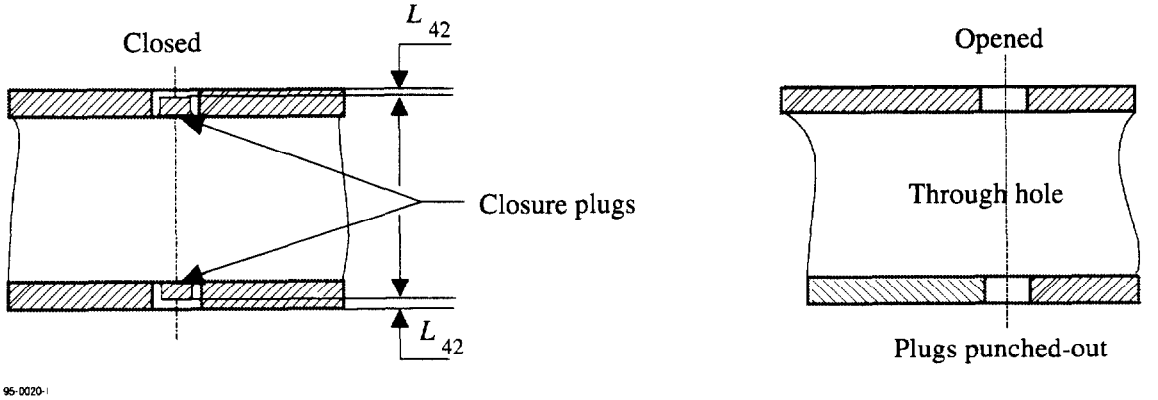

Figure 9 - Media ID sensor holes

Copyright International Organization for Standardization
Provided by IHS under license with ISO
No reproduction or networking permitted without license from IHS
Not for Resale

©ISO/IEC

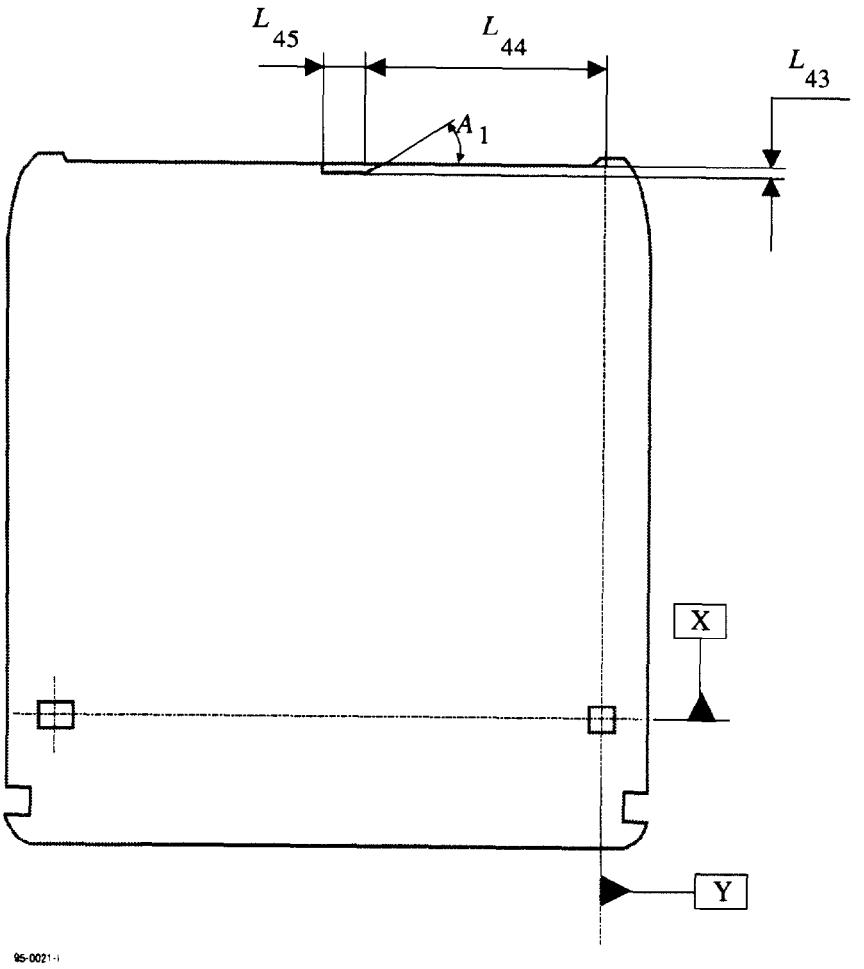

Figure 10 - Shutter sensor notch viewed from Side A

Copyright International Organization for Standardization
Provided by IHS under license with ISO
No reproduction or networking permitted without license from IHS
Not for Resale

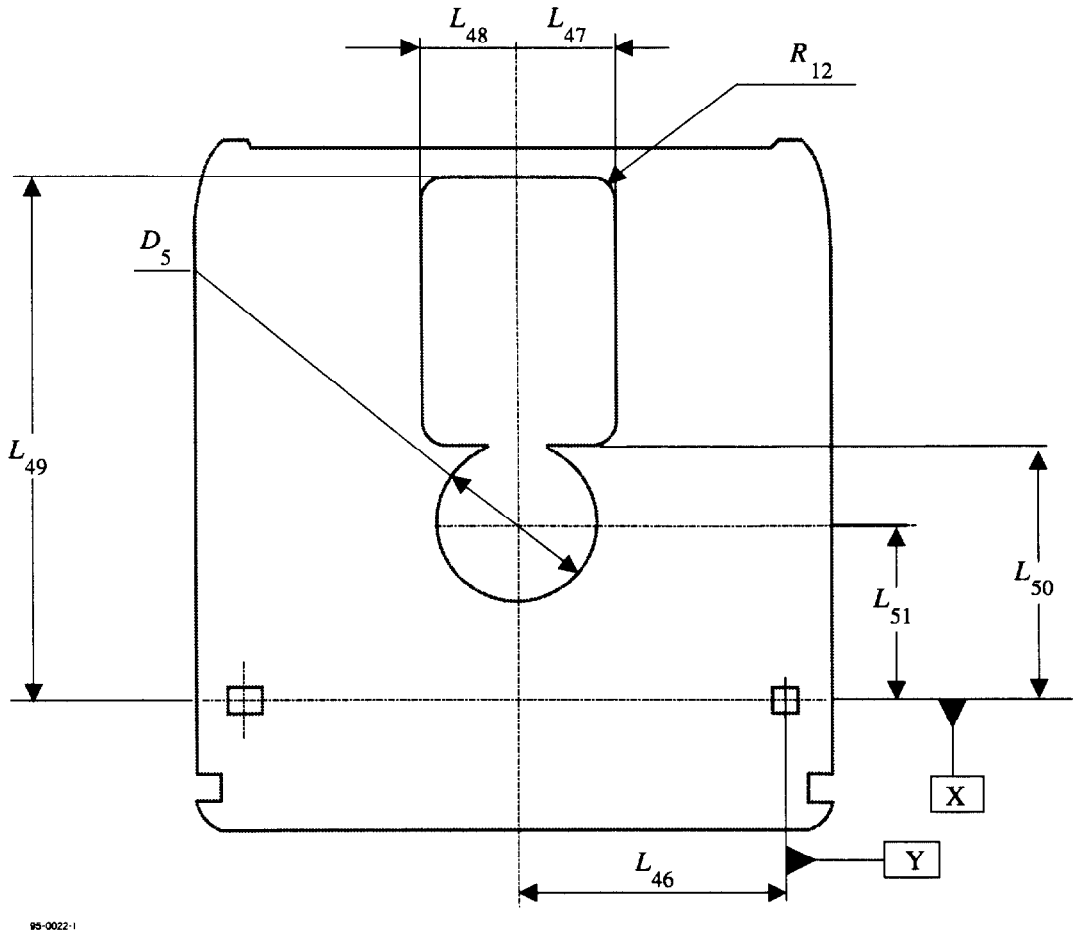

Figure 11 - Head and motor window

Copyright International Organization for Standardization
Provided by IHS under license with ISO
No reproduction or networking permitted without license from IHS
Not for Resale

©ISO/IEC

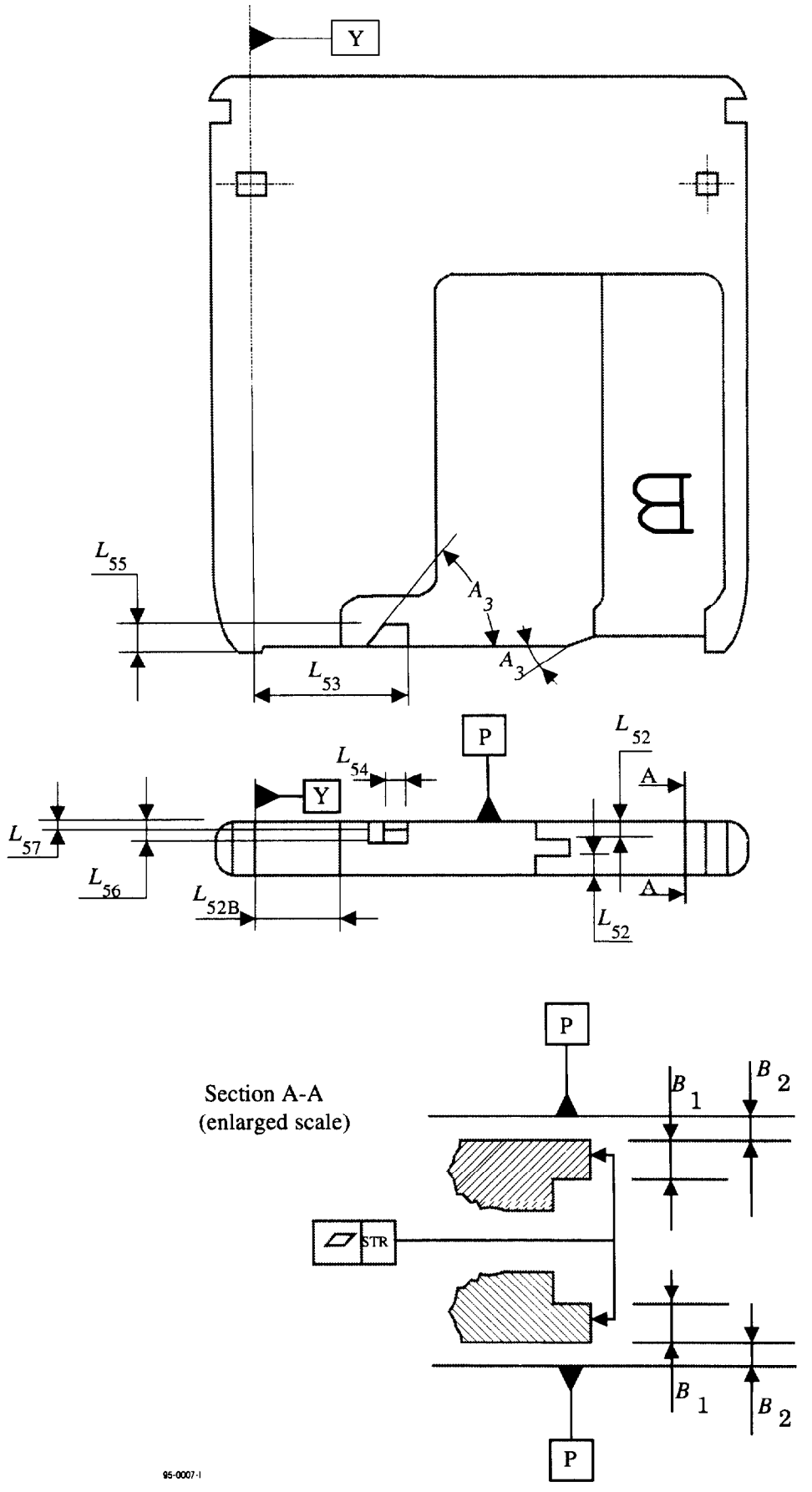

Figure 12 - Shutter opening feature

Copyright International Organization for Standardization
Provided by IHS under license with ISO
No reproduction or networking permitted without license from IHS
Not for Resale

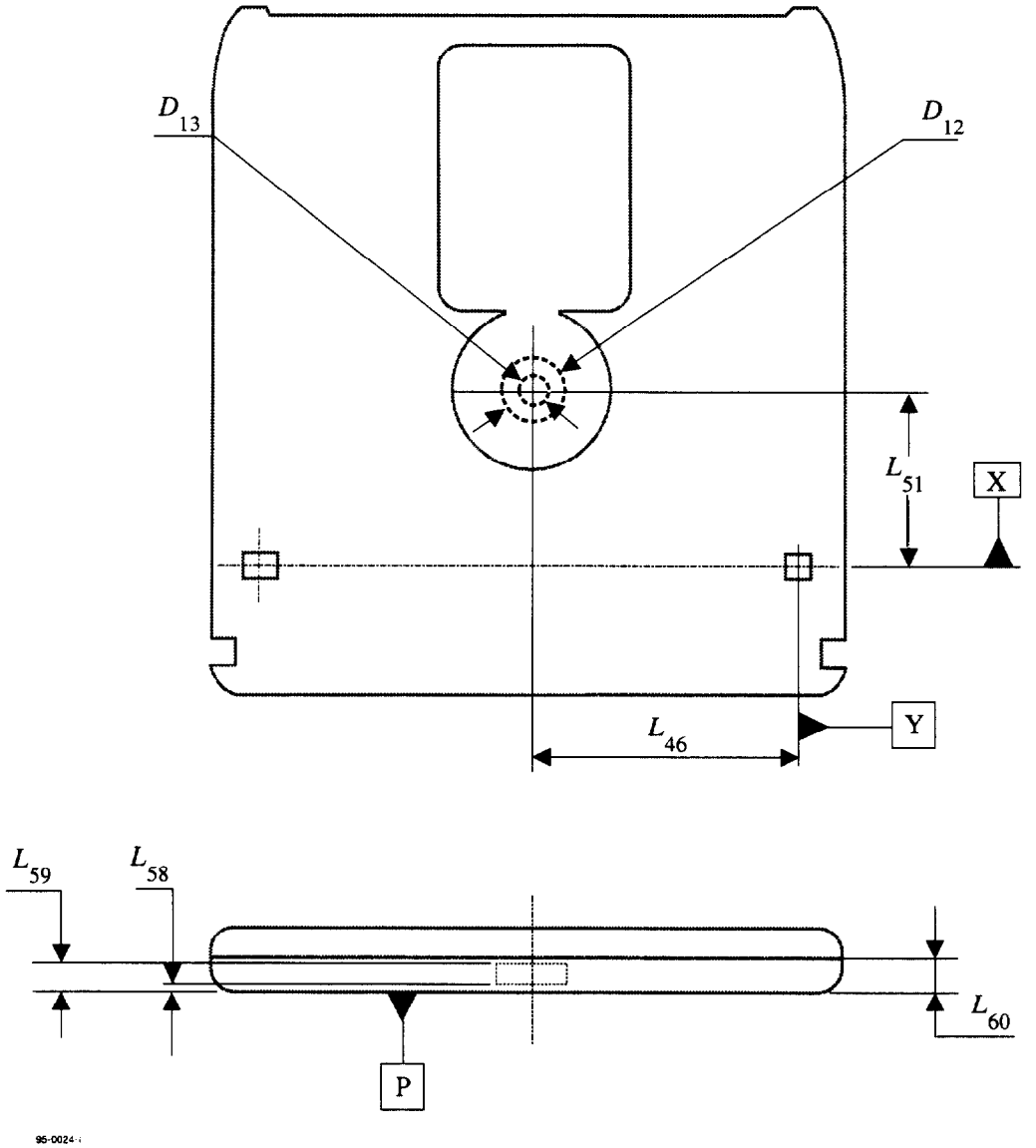

Figure 13 - Capture cylinder

Copyright International Organization for Standardization
Provided by IHS under license with ISO
No reproduction or networking permitted without license from IHS
Not for Resale

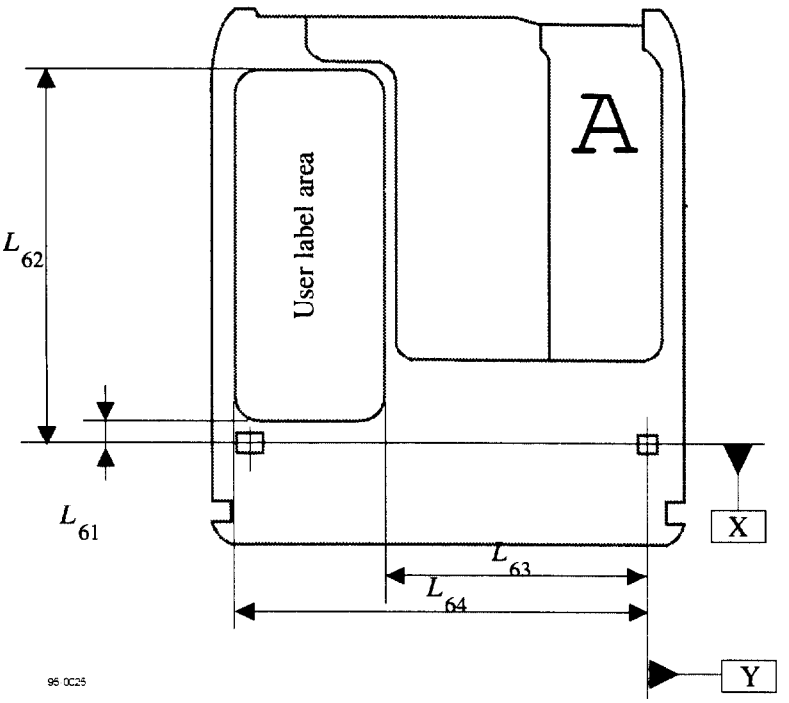

Figure 14a - User label area on Side A

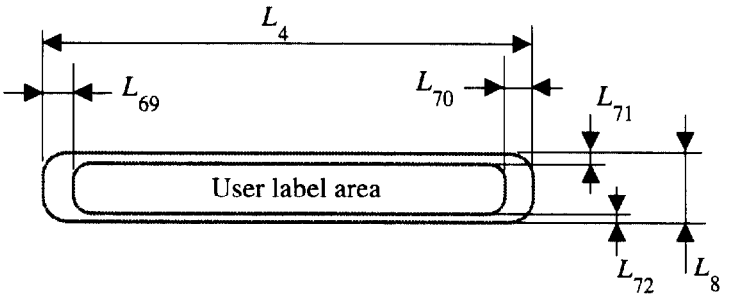

Figure 14b - User label area on bottom surface

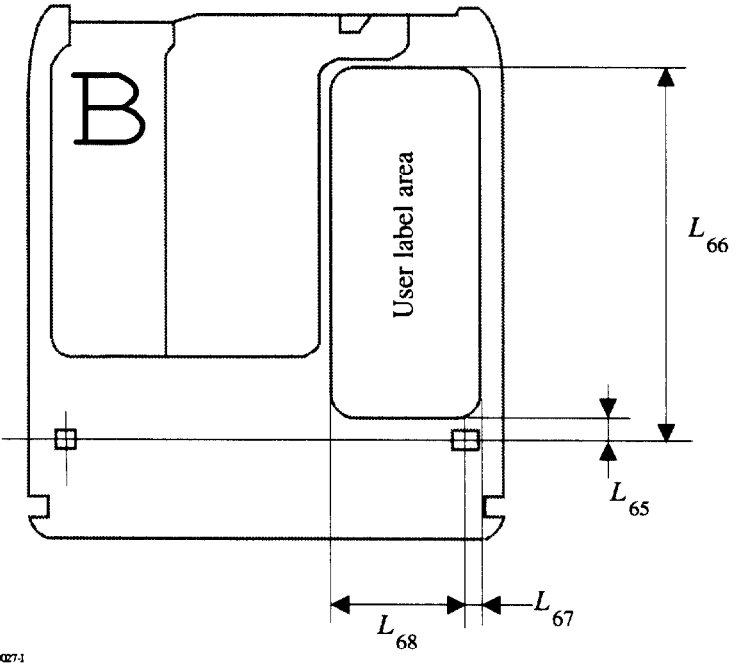

Figure 14c - User label area on Side B

Figure 14 - User label area

Copyright International Organization for Standardization
Provided by IHS under license with ISO
No reproduction or networking permitted without license from IHS
Not for Resale

Section 3 : Format of information

13 Track geometry

13.1 Track shape

The Formatted Zone shall, for radii greater than 29,52 mm / 29,51 mm, contain tracks intended for the continuous servo tracking method.

A track consists of a groove-land-groove combination, where each groove is shared with a neighbouring track. A groove is a trench-like feature, the bottom of which is located nearer to the entrance surface than the land. The centre of the track, i.e. where the recording is made, is the centre of the land. The grooves shall be continuous. The shape of the groove is determined by the requirements in clause 21.

This International Standard distinguishes between physical and logical tracks. A physical track forms a 360° turn of a continuous spiral. A logical track is a portion of a physical track containing a defined number of consecutive sectors (see 14.2).

13.2 Direction of track spiral

The track shall spiral inward from the outer diameter to the inner diameter.

13.3 Track pitch

The track pitch is the distance between adjacent track centrelines, measured in a radial direction. It shall be 1,34 mm ± 0,08 mm except in the Control Track PEP Zone. The width of a group of bands corresponding to 22 388 physical tracks shall be 30,0 mm ± 0,1 mm.

13.4 Logical track number

Each logical track shall be identified by a logical track number (see 15.5). Unless otherwise stated all track numbers refer to logical tracks only.

Track 0 shall be located at radius 60,00 mm ± 0,10 mm.

The logical track numbers of logical tracks located at radii smaller than that of track 0 shall be increased by 1 for each track.

The logical track numbers of logical tracks located at radii larger than that of track 0 shall be negative, and decrease by 1 for each track. Their value is given in TWO's complement, thus track -1 is indicated by (FFFF).

13.5 Physical track number

In cases where track numbers refer to physical tracks this is clearly stated.

Physical track 0 shall begin with sector 0 of logical track 0.

The track numbers of physical tracks located at radii smaller than that of physical track 0 shall be increased by 1 for each physical track.

The track numbers of physical tracks located at radii larger than that of physical track 0 shall be negative, and decrease by 1 for each physical track.

14 Track format

14.1 Physical track layout

All sectors on the disk shall be the same size.

For disks with 1 024-byte sectors, on each physical track there shall be 30 to 59 sectors. Each sector shall comprise 1 410 bytes. A byte is represented on the disk by 12 Channel bits. Hence, the length of one Channel bit is determined by the requirement that there are (30 to 59) x 1 410 x 12 = 507 600 to 998 280 Channel bits on a physical track. The sectors shall be equally spaced over a physical track in such a way that the distance between the first Channel bit of a sector and the first

Copyright International Organization for Standardization
Provided by IHS under license with ISO
No reproduction or networking permitted without license from IHS
Not for Resale

Channel bit of the next sector shall be 16 920 Channel bits ± 5 Channel bits. At the rotational speed of 50 Hz, the period T of a Channel bit equals

$$T = \frac{10^9}{50 \times (507\,600 \text{to } 998\,280)} \text{ns} = 39{,}4 \text{ to } 20 \text{ ns}$$

For disks with 512-byte sectors, on each physical track there shall be 51 to 105 sectors. Each sector shall comprise 799 bytes. A byte is represented on the disk by 12 Channel bits. Hence, the length of one Channel bit is determined by the requirement that there are (51 to 105) x 799 x 12 = 488 988 to 1 006 740 Channel bits on a physical track. The sectors shall be equally spaced over a physical track in such a way that the distance between the first Channel bit of a sector and the first Channel bit of the next sector shall be 9 588 Channel bits ± 5 Channel bits. At the rotational speed of 50 Hz, the period T of a Channel bit equals

$$T = \frac{10^9}{50 \times (488\,988 \text{ to } 1\,006\,\,740)} \text{ns} = 40{,}9 \text{ to } 19{,}9 \text{ ns}$$

14.2 Logical track layout

On each logical track there shall be 17/31 sectors.

14.3 Radial alignment

The Headers of the sectors in each band shall be radially aligned in such a way that the distance between the first Channel bit of sectors in adjacent physical tracks shall be less than 5 Channel bits. The Headers of the first sector in all bands shall be radially aligned in such a way that the distance between the first Channel bit of the first sectors of each band shall be less than 120 Channel bits.

14.4 Sector number

The sectors of a logical track shall be numbered consecutively from 0 to 16/30.

15 Sector format

15.1 Sector layout

Sectors shall have one of the two layouts shown in figure 15 and figure 16 depending on the number of user bytes in the Data field. In figure 15 and figure 16 the numbers below the fields indicate the number of bytes in each field. The number of user bytes per sector is specified by byte 1 of each of the Control Track Zones. The pre-formatted area of 67 bytes, the Header, and the gap area of 10 bytes are the same for both sector formats.

On the disk 8-bit bytes shall be represented by 12 Channel bits (see clause 16).

SM	VFO_1	AM	ID_1	VFO_2	AM	ID_2	PA
8	26	1	5	20	1	5	1

Pre-formatted Header

Gap	ALPC	Gap
5	2	3

ALPC and Gaps

Pre-formatted Header	ALPC, Gaps	VFO_3	Sync	Data field	Buffer
67	10	27	4	1 278 (User Data, DMP, CRC, Resync)	24

Figure 15 - Sector format for 1 024 user bytes

Copyright International Organization for Standardization
Provided by IHS under license with ISO
No reproduction or networking permitted without license from IHS Not for Resale

SM	VFO_1	AM	ID_1	VFO_2	AM	ID_2	PA
8	26	1	5	20	1	5	1

Pre-formatted Header

Gap	ALPC	Gap
5	2	3

ALPC and Gaps

Pre-formatted Header	ALPC, Gaps	VFO_3	Sync	Data field	Buffer
67	10	27	4	670 (User Data, DMP, CRC, Resync)	21

Figure 16 - Sector format for 512 user bytes

15.2 Sector Mark

The Sector Mark shall consist of an embossed pattern that does not occur in RLL (1,7) code (see 16) and is intended to enable the drive to identify the start of the sector without recourse to a phase-locked loop.

The Sector Mark shall have a length of 96 Channel bits and shall consist of pre-recorded, continuous, long marks of different Channel bit lengths followed by a lead-in to the VFO_1 field. This pattern does not exist in data.

There are two kinds of Sector Marks to identify even-numbered and odd-numbered bands. The Sector Mark pattern shall be as shown in figure 17, where T corresponds to the time length of one Channel bit. The signal obtained from a mark is less than a signal obtained from no mark. The lead-in shall have the Channel bit pattern 000101 for odd-numbered bands and 000001 for even-numbered bands.

Copyright International Organization for Standardization
Provided by IHS under license with ISO
No reproduction or networking permitted without license from IHS
Not for Resale

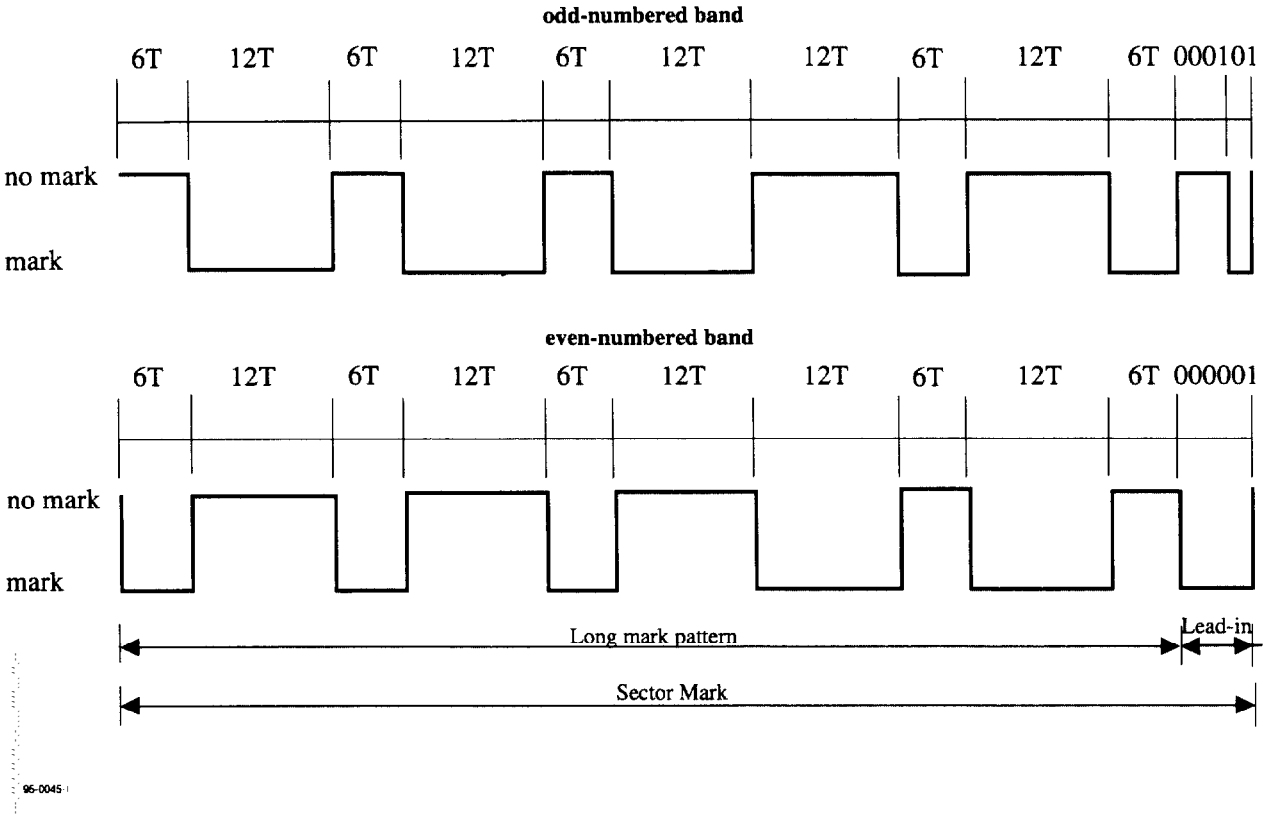

Figure 17 - Sector Mark pattern

15.3 VFO fields

There shall be three fields designated VFO_1, VFO_2 and VFO_3 (figure 18) to give the VFO of the phase-locked loop of the read channel bit synchronization.

These fields shall be embossed, except for rewritable and write once sectors, in which case the VFO_3 field shall be written by the drive when data is written to the sector.

The continuous Channel bit pattern for VFO fields shall be:

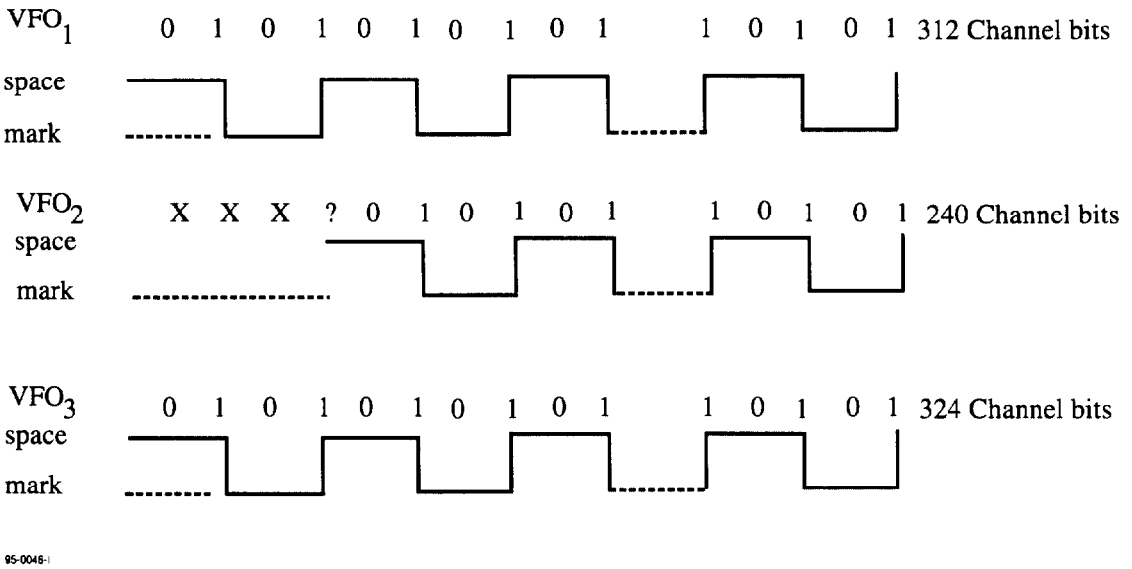

Figure 18 - VFO Field Patterns

Copyright International Organization for Standardization
Provided by IHS under license with ISO
No reproduction or networking permitted without license from IHS Not for Resale

The starting bits of VFO_2, indicated by XXX, shall be determined by the preceding Channel bit and are the result of encoding

1. current data bits set to ZERO ONE,
2. preceding Channel bit set to ZERO, and
3. a following data bit set to ONE.

The 4th bit (identified by ?) shall be set to either a ONE or ZERO in order to produce the mark-space pattern as defined. The objective is to begin the following Address Mark field with an 8T space. This value shall be such to produce the same pattern thereafter as the other VFO fields and to end this field in the trailing edge of an embossed mark.

The start of the VFO_3 field shall be not more than 6 Channel bits apart from the ideal positions given in this International Standard. This tolerance allows for timing inaccuracies of the optical drive controller and will be compensated for by the Gap preceding the VFO_3 field and the Buffer field at the end of the sector.

15.4 Address Mark (AM)

The Address Mark shall consist of an embossed pattern that does not occur in RLL (1,7) code and which is a run-length violation for this code. The field is intended to give the drive byte synchronization for the following ID field. It shall have a length of 12 Channel bits with the following pattern:

0000000010x0

where the value x shall be determined as follows:

if the first data bits of the following ID field are set to ZERO ZERO, x shall be set to ONE

if the first data bits of the following ID field are not set to ZERO ZERO, x shall be set to ZERO.

Since the last bit of the preceding VFO field is set to ONE, and a bit set to ONE appears in the AM after 8 other Channel bits, this 10-bit sequence constitutes the detection pattern.

15.5 ID fields

The two ID fields shall each contain the addresses of the sector, i.e. track number and sector number of the sector, and CRC bytes. Each field shall consist of five bytes with the following embossed contents:

1st byte

This byte shall specify the most significant byte of the logical track number.

2nd byte

This byte shall specify the least significant byte of the logical track number.

3rd byte

bit 7 shall specify the ID number.
when set to ZERO shall mean the ID_1 field,
when set to ONE shall mean the ID_2 field,

bits 6 to 0 shall specify the sector number in binary notation .

4th and 5th bytes

These two bytes shall specify a 16-bit CRC computed over the first three bytes of this field (see annex E).

The first two data bits of the ID field shall be encoded using table 3. When doing this, the last Channel bit from the AM shall be used as input to the encoder.

The first three Channel bits of the ID field shall be decoded using table 4. When doing this, the last two Channel bits from the AM shall be used as input to the decoder.

15.6 Postamble (PA)

This field shall be equal in length to 12 Channel bits following the ID_2 field.

Copyright International Organization for Standardization
Provided by IHS under license with ISO
No reproduction or networking permitted without license from IHS
Not for Resale

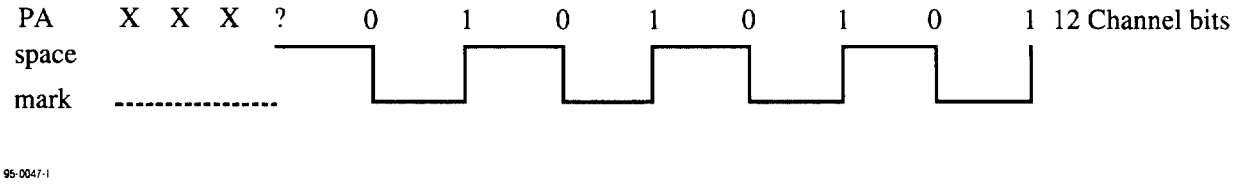

Figure 19 - Postamble pattern

The starting bits of the PA, indicated by XXX, shall be determined by the preceding Channel bit and are the result of encoding

1. current data bits set to ZERO ONE,
2. preceding Channel bit set to ZERO, and
3. a following data bit set to ONE.

and the value of the 4th bit (identified by ?) shall be such to end this field in the trailing edge of an embossed mark such that the following gap field is always recorded as a space. Due to the use of the RLL (1,7) encoding scheme (see 16), the framing of the last byte of the CRC in the ID_2 field is uncertain within a few bit times. The Postamble allows the last byte of the CRC to achieve closure and permits the ID field to end always in a predictable manner. This is necessary in order to locate the following field in a consistent manner.

15.7 Gap

There are two Gap fields in each sector.

The first Gap shall be equal in length to 60 Channel bits. Its contents are not specified and shall be ignored in interchange, but shall not be embossed. It is the first field after the pre-formatted header and gives the drive some time for processing after it has finished reading the header.

The second gap shall be equal in length to 36 Channel bits ± 6 Channel bits. This tolerance is needed to allow for the tolerance on the position of the following VFO_3 field. Moreover, it need not start exactly on a Channel bit position as extrapolated from the header.

In the case of R/W or WO sectors, this field shall be unrecorded, but in the case of an embossed sector, it shall be pre-recorded with the same embossed marks in byte pattern as for the VFO_3.

15.8 Auto Laser Power Control (ALPC)

This field shall be equal in length to 24 Channel bits. It is intended for testing the laser power level.

In the case of R/W or WO sectors, the contents of this field are not specified by this International Standard. In the case of embossed sectors, this field shall be pre-recorded with the same embossed marks in the byte pattern as for the VFO_3 field.

15.9 Sync

The sync field is intended to allow the drive to obtain byte synchronization for the following Data field. It shall have a length of 48 Channel bits and be recorded with the bit pattern

0100 0010 0100 0010 0010 0010 0100 0100 1000 0010 0100 10x0

where the value x shall be as follows:

if the first data bits of the following Data field are set to ZERO ZERO, x shall be set to ONE

if the first data bits of the following Data field are not set to ZERO ZERO, x shall be set to ZERO.

15.10 Data field

The Data field is intended for recording user data. It shall consist of either:

– 1 278 bytes comprising

1 024 user bytes
242 bytes for CRC, ECC and Resync

Copyright International Organization for Standardization
Provided by IHS under license with ISO
No reproduction or networking permitted without license from IHS Not for Resale

12 bytes for control information (DMP)

or

– 670 bytes comprising

512 user bytes
144 bytes for CRC, ECC and Resync
12 bytes for control information (DMP)
2 (FF)-bytes.

The disposition of these bytes in the Data field is specified in annex F.

The first two data bits of the Data field shall be encoded using table 3. When doing this, the last Channel bit from the Sync field shall be used as input to the encoder.

The first three Channel bits of the Data field shall be decoded using table 4. When doing this, the last two Channel bits from the Sync field shall be used as input to the decoder.

15.10.1 User data bytes

These bytes are at the disposal of the user for recording information. There are 1 024 or 512 such bytes depending on the sector format.

15.10.2 CRC and ECC bytes

The Cyclic Redundancy Check bytes and Error Correction Code bytes are used by the error detection and correction system to rectify erroneous data. The ECC is a Reed-Solomon code of degree 16.

The computation of the check bytes of the CRC and ECC shall be as specified in annex F.

15.10.3 Bytes for control information (DMP)

There shall be 12 bytes for control information. They are intended for use by drives handling Types WO and WO-R disks and indicate whether or not a sector on a disk of this type have been previously written (see also annex V).

For Type WO and WO-R disks, this field shall be unrecorded when the sector does not contain user data. When user data have been written to the sector, the bytes of this field shall be set to (FF).

For all other Types of disks, these bytes shall always be set to (FF) when data is recorded in the sector.

15.10.4 Last bytes of the data field of the 512-byte sector format

The last two bytes of the Data field of the 512-byte sector format shall be set to (FF).

15.10.5 Resync bytes

The Resync bytes enable a drive to regain byte synchronization after a large defect in the data field.

Annex G specifies the Resync bytes and the criteria for selection of which of the two bytes is to be used.

The Resync fields shall be inserted among the rest of the bytes of the Data field as specified in annex-F.

15.11 Buffer field

The Buffer field shall have a nominal length of 288/252 Channel bits, ± 96/60 Channel bits and is divided into two parts. The first part shall have a length of twelve Channel bits which shall be used for RLL (1,7) closure. The second part of this field shall not contain any data and is needed to allow for drive motor speed tolerances and other electrical and mechanical tolerances.

In the first part of this field, the RLL (1,7) closure shall end in a space to ensure that the second part will consist of spaces. Permitted RLL closures can be either the PA defined in 15.6 or any other valid RLL (1,7) closure.

The second part of this field is needed for four reasons. Firstly, the tolerance on the header-to-header distance as specified in 14.1. Secondly, the tolerance in the start of the VFO_3 field as specified in 15.7. Thirdly, the actual length of the written data, as

Copyright International Organization for Standardization
Provided by IHS under license with ISO
No reproduction or networking permitted without license from IHS
Not for Resale

determined by the runout of the track and the speed variations of the disk during writing of the data. Fourthly, to ensure that all data written previously, the length of which is subject to the above tolerances, has been erased.

16 Recording code

The 8-bit bytes in the two ID fields and in the data field shall be converted to Channel bits on the disk according to table 3 and annex G. Channel bits in these fields shall be demodulated to information bits according to table 4 and annex G. All other fields in a sector have already been defined in terms of Channel bits. Write pulses shall produce marks in a manner such that the edge between a mark and space or a space and a mark corresponds to a Channel bit that is a ONE.

The recording code used to record all data in the formatted areas of the disk shall be the run-length limited code known as RLL (1,7) as defined in tables 3 and 4.

Table 3 - Conversion of input bits to Channel bits

Preceding Channel bit	Current input bits	Following input bits	Channel bits RLL(1,7)
X	00	0X	001
0	00	1X	000
1	00	1X	010
0	01	0X	001
0	01	1X	000
1	01	00	010
1	01	not 00	000
0	10	0X	101
0	10	1X	010
0	11	00	010
0	11	not 00	100

NOTE: "not 00" means 01, 10, 11

"X" means the value is either 1 or 0

The coding shall start at the first bit of the first byte of the field to be converted. After a Resync field the RLL (1,7) coding shall start again with the last two input bits of the Resync bytes.

Table 4 - Demodulation of Channel bits to information bits

Preceding Channel bits	Current Channel bits	Following Channel bits	Decoded information bits
10	000	XX	00
0X	000	XX	01
00	001	0X	01
01 or 10	001	0X	00
X0	010	00	11
X0	010	01 or 10	10
01	010	00	01
01	010	01 or 10	00
X0	100	XX	11
X0	101	0X	10

NOTE: "X" means the value is either 1 or, 0

Copyright International Organization for Standardization
Provided by IHS under license with ISO
No reproduction or networking permitted without license from IHS Not for Resale

17 Formatted Zone

17.1 General description of the Formatted Zone

The Formatted Zone contains all information on the disk relevant for data interchange. The information comprises embossed tracking provisions, embossed headers, embossed data and, possibly, user-written data. In this clause the term 'data' is reserved for the content of the Data field of a sector, which, in general, is transferred to the host.

Clause 17 defines the layout of the information; the characteristics of signals obtained from this information are specified in section 4 and 6.

17.2 Division of the Formatted Zone

The Formatted Zone shall be divided into zones containing the logical tracks indicated in table 5.

The dimensions are given as reference only, and are nominal locations. The tolerance on the location of logical track 0 is specified in 13.4. The tolerances on other radii are determined by the tolerance on the track pitch as specified in 13.3.

Table 5 - Layout of the Formatted Zone

Zone	Logical Track Address		Radius in mm	
	1 024-byte sectors	512-byte sectors	1 024-byte sectors	512-byte sectors
- Lead-in Zone	-2 596 to -1 299	-2 520 to -1 261	61,00 to 60,50	61,00 to 60,50
- Outer Control Track SFP Zone	-1 298 to -414	-1 260 to -421	60,50 to 60,16	60,50 to 60,17
- Outer Manufacturer Zone	-413 to -1	-420 to -1	60,16 to 60,00	60,17 to 60,00
- User Zone	0 to 58 739	0 to 55 769	60,00 to 29,93	60,00 to 30,30
- Inner Manufacturer Zone	58 740 to 59 039	55 770 to 56 483	29,93 to 29,70	30,30 to 29,72
- Guard Band	58 740 to 58 769	55 770 to 56 228	29,93 to 29,91	30,30 to 29,93
- Manufacturer Test Zone	58 770 to 58 919	56 229 to 56 432	29,91 to 29,79	29,93 to 29,76
- Guard Band	58 920 to 59 039	56 433 to 56 483	29,79 to 29,70	29,76 to 29,72
- Inner Control Track SFP Zone	59 040 to 59 279	56 484 to 56 738	29,70 to 29,52	29,72 to 29,51
- Transition Zone for SFP			29,52 to 29,50	29,51 to 29,50
- Control -Track PEP Zone			29,50 to 29,00	29,50 to 29,00
- Reflective Zone			29,00 to 27,00	29,00 to 27,00

The Formatted Zone shall extend from radius 61,00 mm to radius 27,00 mm. From radius 61,00 mm to radius 29,52 mm / 29,51 mm, it shall be provided with tracks containing servo and address information.

The location of the zones defined in table 5 are also shown in figure 20.

Copyright International Organization for Standardization
Provided by IHS under license with ISO
No reproduction or networking permitted without license from IHS
Not for Resale

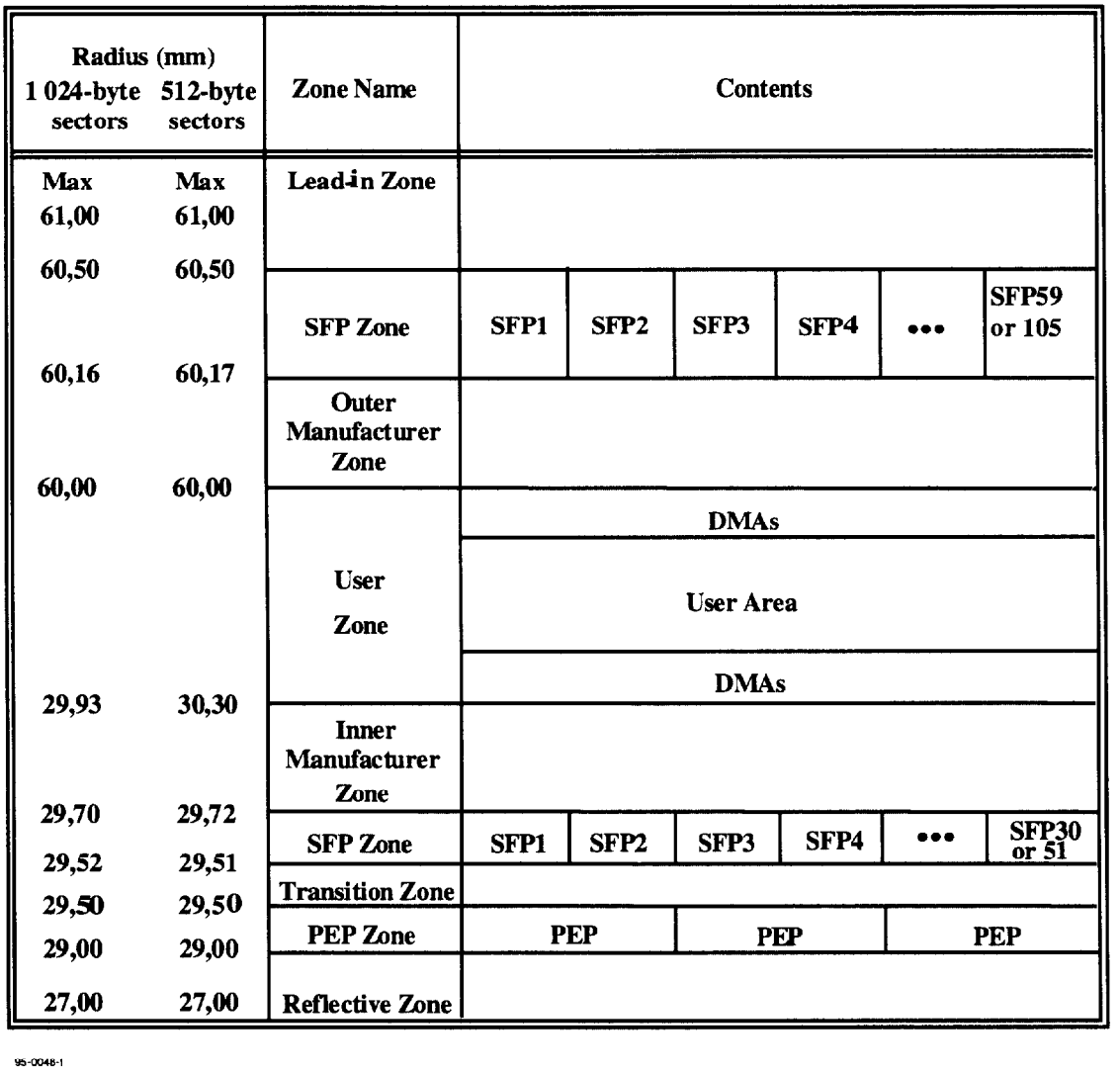

Figure 20 - Location of the defined Zones

17.2.1 Lead-in Zone

The Lead-In Zone shall be used for positioning purposes only.

17.2.2 Manufacturer Zones

There is an Inner and an Outer Manufacturer Zone. They are provided to allow the media manufacturer to perform tests on the disk, including write operations, in an area located away from recorded information.

17.2.2.1 Outer Manufacturer Zone

The Outer Manufacturer Zone shall comprise 413/420 logical tracks.

Logical tracks -1 to -8 are a buffer and shall not be used. Other logical tracks may have embossed marks in the data field (15.10) that need not comply with the requirements of clause 15.10 or clause 16. The information in this zone is not specified by this International Standard and shall be ignored in interchange.

All physical tracks in the Outer Manufacturer Zone shall contain 59/105 sectors.

17.2.2.2 Inner Manufacturer Zone

The Inner Manufacturer Zone is divided into three parts: Two Guard bands and in between the actual Manufacturer Test zone.

The purpose of the Guard bands is to protect and buffer the areas that contain information from accidental damage when the area between the Guard bands is used for testing or calibration of the optical system.

Copyright International Organization for Standardization
Provided by IHS under license with ISO
No reproduction or networking permitted without license from IHS Not for Resale

The manufacturer test zone may have embossed marks in the data field (15.10) that need not comply with the requirements of 15.10 or clause 16. The information in this zone is not specified by this International Standard and shall be ignored in interchange.

All physical tracks of the Inner Manufacturer zone shall contain 30/51 sectors.

17.2.3 User Zone

The Data fields in the User Zone can be user-written or contain embossed data, in the format of clause 15, depending upon the type of the disk.

The layout of the User Zone and its sub-divisions is specified in clause 18.

17.2.4 Reflective Zone

This International Standard does not specify the format of the Reflective Zone, except that it shall have the same recording layer as the remainder of the Formatted Zone.

17.2.5 Control Track Zones

The three zones

Control track PEP Zone
Inner Control Track SFP Zone
Outer Control Track SFP Zone

shall be used for recording control track information.

The control track information shall be recorded in two different formats, the first format in the Control Track PEP Zone, and the second format in the Inner and Outer Control Track SFP Zones.

The Control Track PEP Zone shall be recorded using low frequency phase-encoded modulation.

The Inner and Outer Control Track SFP Zones shall each consist of tracks recorded by the same modulation method and format as is used in the User Zone (see clauses 16 and 18).

The Transition Zone for SFP is an area in which the format changes from the Control Track PEP Zone which contains no servo information to a zone including servo information.

All physical tracks in the Inner Control Track SFP Zone shall have 30/51 sectors.

All physical tracks in the Outer Control Track SFP Zone shall have 59/105 sectors.

17.3 Control Track PEP Zone

The information contained in the Control Track PEP Zone gives a general characterization of the disk. It specifies the type of disk, the ECC, the tracking method, etc.

This zone shall not contain any servo information. All information shall be pre-recorded in phase-encoded modulation. The marks in all tracks of this zone shall be radially aligned, so as to allow information recovery from this zone without radial tracking being established by the drive.

The read power shall not exceed 0,65 mW.

17.3.1 Recording in the PEP Zone

In the PEP Zone there shall be 561 to 567 PEP-channel bit cells per physical track. A PEP-Channel bit cell shall be 656 PEP-Channel bits ± 1 PEP-Channel bits long. A PEP-channel bit is recorded by writing marks in either the first or the second half of the cell.

A mark shall be nominally two PEP-Channel bits long and shall be separated from adjacent marks by a space of nominally two PEP-channel bits.

A ZERO shall be represented by a change from marks to no marks at the centre of the cell and a ONE by a change from no marks to marks at this centre.

Copyright International Organization for Standardization
Provided by IHS under license with ISO
No reproduction or networking permitted without license from IHS
Not for Resale

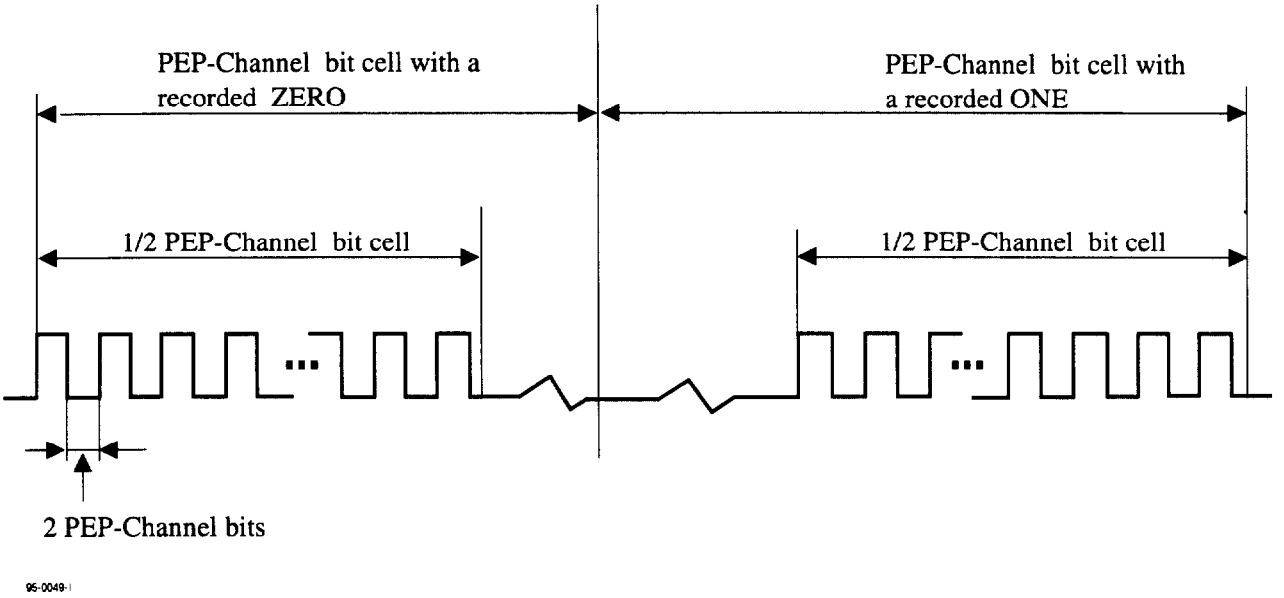

Figure 21 - Example of phase-encoded modulation in the PEP Zone

Requirements for the density of the tracks and the shape of marks in the Control Track PEP Zone are specified in clause 24.

17.3.2 Format of the tracks of the PEP Zone

Each physical track in the PEP Zone shall have three sectors. On Side B of Type - R ODCs, the PEP shall be recorded bit-wise in the reverse direction. This feature allows drives conforming to previous standards to read correctly the PEP Zone of ODCs conforming to this International Standard. The numbers below the fields in figure 22 indicate the number of PEP bits in each field.

|<---------- ------- One physical track (3 sectors) ---------->|

Sector	Gap	Sector	Gap	Sector	Gap
177		177		177	

Figure 22 - Track format in the PEP Zone

The gaps between sectors shall be unrecorded areas having a length corresponding to 10 to 12 PEP bit cells.

17.3.2.1 Format of a sector

Each sector of 177 PEP bits shall have the following layout.

|<---------- ------- One sector (177 bits) ---------->|

Preamble	Sync	Sector Number	Data	CRC
16	1	8	144	8

Figure 23 - Sector format in the PEP Zone

17.3.2.1.1 Preamble field

This field shall consist of 16 ZERO bits.

17.3.2.1.2 Sync field

This field shall consist of 1 ONE bit.

17.3.2.1.3 Sector Number field

This field shall consist of eight bits specifying in binary notation the Sector Number from 0 to 2.

17.3.2.1.4 Data field

This field shall comprise 18 8-bit bytes numbered 0 to 17. These bytes shall specify the following.

Copyright International Organization for Standardization
Provided by IHS under license with ISO
No reproduction or networking permitted without license from IHS Not for Resale

Byte 0

bit 7 shall be set to ZERO indicating the continuous servo tracking method,

bits 6 to 4 shall be set to 110 indicating a logical ZCAV.

Other settings of these bits are prohibited by this International Standard (see also annex V).

bit 3 shall be set to ZERO

bits 2 to 0 shall be set to 010 indicating RLL (1,7) mark edge modulation,

Other settings of these bits are prohibited by this International Standard.

Byte 1

bit 7 shall be set to ZERO

bits 6 to 4 specify the error correction code:

when set to 000 shall indicate R-S LDC degree 16, and 10 interleaves.
when set to 001 shall indicate R-S LDC degree 16, and 5 interleaves.

Other settings of these bits are prohibited by this International Standard.

bit 3 shall be set to ZERO

bits 2 to 0 these bits shall specify in binary notation the power n of 2 in the following formula which expresses the number of user bytes per sector

256×2^n

Values of n other than 1 or 2 are prohibited by this International Standard. The contents of these bits shall be identical everywhere on a disk.

Byte 2

This byte shall specify in binary notation the number of sectors in each logical track.

Byte 3

This byte shall give the manufacturer's specification for the baseline reflectance R of the disk when measured at a nominal wavelength of 780 nm. It is specified as a number n such that

$$n = 100\ R.$$

Byte 4

This byte shall specify that the recording is on-land and it shall indicate the signal amplitude of the pre-recorded marks.

bit 7 shall be set to ZERO to specify on-land recording.

The absolute value of the signal amplitude is given as a number n between -20 and -50, such that

$$n = -50\ (I_{sm} / I_0)$$

where I_{sm} is the signal from the Sector Mark in Channel 1 and I_0 is the signal from an unrecorded, ungrooved area in the Control Track PEP Zone.

bits 6 to 0 shall express this number n. Bit 6 shall be set to ONE to indicate that this number is negative and expressed by bits 5 to 0 in TWO's complement. Recording is high-to-low.

Byte 5

This byte shall be set either to (00) or to (FF).

Copyright International Organization for Standardization
Provided by IHS under license with ISO
No reproduction or networking permitted without license from IHS Not for Resale

Byte 6

This byte shall specify in binary notation a number n representing 20 times the maximum read power expressed in milliwatts which is permitted for reading the SFP Zone at a rotational frequency of 50 Hz and a wavelength of 780 nm. This number *n* shall be between 0 and 40.

Byte 7

The byte shall specify the disk Type.

0010 0000	shall mean Rewritable (Type R/W)
0000 0000	shall mean Fully Embossed (Type O-ROM)
1010 0000	shall mean Partially Embossed (Type P-ROM)
0001 0001	shall mean Write Once (Type WO)

Other settings of this byte are prohibited by this International Standard (see also annex V).

Byte 8

This byte shall specify the most significant byte of the logical track number in which the Outer Control Track SFP Zone starts. It shall be set to (FA) or (FB) representing the MSB of track number -1 298/-1 260.

Byte 9

This byte shall specify the least significant byte of the logical track number in which the Outer Control Track SFP Zone starts. It shall be set to (EE) or (14) representing the LSB of track number -1 298/-1 260.

Byte 10

This byte shall specify the most significant byte of the logical track number in which the Inner Control Track SFP Zone starts. It shall be set to (E6) or (DC) representing the MSB of Logical Track Number 59 040/56 484.

Byte 11

This byte shall specify the least significant byte of the logical track number in which the Inner Control Track SFP Zone starts. It shall be set to (A0) or (A4) representing the LSB of Logical Track Number 59 040/56 484.

Byte 12

This byte shall specify the track pitch in micrometers times 100. It shall be set to (86) representing a track pitch of 1,34 mm.

Byte 13

This byte shall be set to (FF) and shall be ignored in interchange.

Bytes 14 to 17

The contents of these bytes are not specified by this International Standard.

17.3.2.1.5 CRC

The eight bits of the CRC shall be computed over the Sector Number field and the Data field of the PEP sector.

The generator polynomial shall be

$$G(x) = x^8 + x^4 + x^3 + x^2 + 1$$

The residual polynomial $R(x)$ shall be

$$R(x) = \left(\sum_{i=144}^{i=151} \overline{a_i} x^i + \sum_{i=0}^{i=143} a_i x^i \right) x^8 \mod G(x)$$

where a_i denotes a bit of the input data and $\overline{a_i}$ an inverted bit. The highest order bit of the sector number field is a_{151}.
The eight bits c_k of the CRC are defined by

Copyright International Organization for Standardization
Provided by IHS under license with ISO
No reproduction or networking permitted without license from IHS Not for Resale

$$R(x) = \sum_{k=0}^{k=7} c_k x^k$$

where c_7 is recorded as the highest order bit of the CRC byte of the PEP sector.

17.3.2.2 Summary of the format of the Data field of a sector

Table 6 - Format of the Data field of a sector of the PEP Zone

Byte \ Bit	7	6	5	4	3	2	1	0
0	Format	Logical ZCAV			0	Modulation code		
1	0	ECC			0	Number of user bytes		
2	Number of sectors in each logical track							
3	Baseline reflectance at 780 nm							
4	0	Amplitude and polarity of pre-formatted data						
5	(00) or (FF)							
6	Maximum read power for the SFP Zone at 50 Hz and 780 nm							
7	ODC Type							
8	Start track of Outer SFP Zone, MSB of Logical Track Number							
9	Start track of Outer SFP Zone, LSB of Logical Track Number							
10	Start track of Inner SFP Zone, MSB of Logical Track Number							
11	Start track of Inner SFP Zone, LSB of Logical Track Number							
12	Track pitch							
13	(FF)							
14	Not specified by this International Standard							
15	Not specified by this International Standard							
16	Not specified by this International Standard							
17	Not specified by this International Standard							

17.4 Control Track SFP Zones

The two Control Track SFP Zones shall be pre-recorded in the sector format specified in clause 15. The pre-recorded data marks shall satisfy the requirements for the signals specified in clause 23.

Each sector of the SFP Zones (see 17.2.5) shall include 512 bytes of information numbered 0 to 511;

- a duplicate of the PEP information (18 bytes),
- media information (362 bytes),
- system information (132 bytes),

In the case of 1 024-byte sectors these first 512 bytes shall be followed by 512 (FF)-bytes.

17.4.1 Duplicate of the PEP information

Bytes 0 to 17 shall be identical with the 18 bytes of the Data field of a sector of the PEP Zone (see 17.3.2.1.4).

17.4.2 Media information

Bytes 18 to 359 shall specify read and write parameters at three laser wavelengths L_1 = 780 nm, L_2 = 685 nm, and L_3. For each wavelength the baseline reflectance R_1, R_2 or R_3 is specified. The read and write powers are specified for four different rotational frequencies N_1 = 50 Hz, N_2 = 60 Hz, N_3 and N_4 for each wavelength. For each value of N one set of write power for the 4T mark is given: it contains three values for the inner, middle and outer radius.

Bytes 18 to 47 shall specify the conditions for

L_1 = 780-nm and N_1 = 50 Hz.

Copyright International Organization for Standardization
Provided by IHS under license with ISO
No reproduction or networking permitted without license from IHS
Not for Resale

All values specified in bytes 18 to 359 shall be such that the requirements of 11.5 and of clauses 25, 26, 27 and 28 are met (see table 7).

Byte 18

This byte shall specify the wavelength L_1, in nanometres, as a number n between 0 and 255 such that

$$n = 1/5\ L_1$$

This byte shall be set to $n = 156$ for ODCs according to this International Standard.

Byte 19

This byte shall specify the baseline reflectance R_1 (see 11.5.4) at wavelength L_1 as a number n such that

$$n = 100\ R_1$$

Byte 20

This byte shall specify the rotational frequency N_1, in hertz, as a number n such that

$$n = N_1$$

This byte shall be set to $n = 50$ for ODCs according to this International Standard.

Byte 21

This byte shall specify the maximum read power P_1 in milliwatts, for the User Zone as a number n between 0 and 40 such that

$$n = 20\ P_1$$

Bytes 22 to 24

These bytes are not used and shall bet set to (FF).

The following bytes 25 to 27 shall specify the write power P_w for 4T marks in milliwatts indicated by the manufacturer of the disk (see 25.3.3). P_w is expressed as a number n between 0 and 255 such that

$$n = 5P_w$$

Byte 25

This byte shall specify P_w for

$$r = 30 \text{ mm}$$

Byte 26

This byte shall specify P_w for

$$r = 45 \text{ mm}$$

Byte 27

This byte shall specify P_w for

$$r = 60 \text{ mm}$$

The following bytes 28 to 30 shall specify the thermal build-up offset O_{th} in percent of the time period T of one Channel bit indicated by the manufacturer of the disk (see 27.5). O_{th} shall be expressed as a number n between 0 and 255 such that

$$n = 2\ O_{th}$$

Byte 28

This byte shall specify O_{th} for

$$r = 30 \text{ mm}$$

Copyright International Organization for Standardization
Provided by IHS under license with ISO
No reproduction or networking permitted without license from IHS Not for Resale

Byte 29

This byte shall specify O_{th} for

$r = 45$ mm

Byte 30

This byte shall specify O_{th} for

$r = 60$ mm

The following bytes 31 to 33 shall specify the write power P_w for 2T marks in milliwatts indicated by the manufacturer (see 25.3.3). P_w is expressed by a number n between 0 and 255 such that

$n = 5 P_w$

Byte 31

This byte shall specify P_w for

$r = 30$ mm

Byte 32

This byte shall specify P_w for

$r = 45$ mm

Byte 33

This byte shall specify P_w for

$r = 60$ mm

Bytes 34 to 43

These bytes are not used and shall be set to (FF).

Byte 44

This byte shall be set to (00)

The following bytes 45 to 47 shall specify the DC erase power P_e in milliwatts indicated by the manufacturer of the disk (see clause 28). P_e shall be expressed as a number n between 0 and 255 such that

$n = 5 P_e$

Byte 45

This byte shall specify P_e for

$r = 30$ mm

Byte 46

This byte shall specify P_e for

$r = 45$ mm

Byte 47

This byte shall specify P_e for

$r = 60$ mm

Bytes 48 to 358 shall be set to either the values indicated or (FF).

Copyright International Organization for Standardization
Provided by IHS under license with ISO
No reproduction or networking permitted without license from IHS
Not for Resale

Byte 48

This byte shall specify, at wavelength L_1, the rotational frequency N_2, in hertz, as a number n between 0 and 255 such that

$$n = N_2$$

If this byte is not set to (FF), n shall be set to 60 for ODCs according to this International Standard.

Byte 49

This byte shall specify the maximum read power P_2, in milliwatts, for the User Zone as a number n between 0 and 255 such that

$$n = 20\,P_2$$

Bytes 50 to 75

For the values specified in bytes 18, 19, 48 and 49, bytes 50 to 75 shall specify the parameters indicated in bytes 22 to 47.

Byte 76

This byte shall specify, at wavelength L_1, rotational frequency N_3, in hertz, expressed as a number n between 0 and 255 such that

$$n = N_3$$

Byte 77

This byte shall specify the maximum read power P_3, in milliwatts, for the User Zone, as a number n between 0 and 255 such that

$$n = 20\,P_3$$

Bytes 78 to 103

For the values specified in bytes 18, 19, 76 and 77, bytes 78 to 103 shall specify the parameters indicated in bytes 22 to 47.

Byte 104

This byte shall specify, at wavelength L_1, rotational frequency N_4, in hertz, as a number n between 0 and 255 such that

$$n = N_4$$

Byte 105

This byte shall specify the maximum read power P_4, in milliwatts, for the User Zone as a number n between 0 and 255 such that

$$n = 20\,P_4$$

Bytes 106 to 131

For the values specified in bytes 18, 19, 104 and 105, bytes 106 to 131 shall specify the parameters indicated in bytes 22 to 47.

Byte 132

This byte shall specify wavelength L_2, in nanometres, as a number n between 0 and 255 such that

$$n = 1/5\,L_2$$

If this byte is not set to (FF), n shall be set to 137 for ODCs according to this International Standard. This value indicates that the actual wavelength equals 685 nm ± 10 nm.

Byte 133

This byte shall specify the baseline reflectance R_2 at wavelength L_2 as a number n between 0 and 100 such that

$$n = 100\,R_2.$$

Copyright International Organization for Standardization
Provided by IHS under license with ISO
No reproduction or networking permitted without license from IHS Not for Resale

Bytes 134 to 245

The allocation of information to, or the setting of, these bytes shall correspond to those of bytes 20 to 131. The values specified shall be for L_2 (byte 132) and R_2 (byte 133).

Byte 246

This byte shall specify wavelength L_3, in nanometres, as a number n between 0 and 255 such that

$$n = 1/5\ L_3$$

Byte 247

This byte shall specify the baseline reflectance R_3 at wavelength L_3 as a number n between 0 and 100 such that

$$n = 100\ R_3.$$

Bytes 248 to 359

The allocation of information to, or the setting of, these bytes shall correspond to those of bytes 20 to 131. The values specified shall be for L_3 (byte 246) and R_3 (byte 247).

Bytes 360 to 363

These bytes shall be set to (FF).

Byte 364

This byte shall specify the polarity of the figure of merit (see 26.1). It shall be set to (01) to mean that the polarity is negative (the direction of Kerr rotation due to the written mark is counterclock-wise).

Byte 365

This byte shall specify the figure of merit F as a number n (see 26.1), such that

$$n = 10\,000\ F$$

Bytes 366 to 379

These bytes shall be set to (FF).

Copyright International Organization for Standardization
Provided by IHS under license with ISO
No reproduction or networking permitted without license from IHS
Not for Resale

Table 7 - Summary of media information

L_1 and R_1				L_2 and R_2				L_3 and R_3			
N_1	N_2	N_3	N_4	N_1	N_2	N_3	N_4	N_1	N_2	N_3	N_4
18				132				246			
19				133				247			
20	48	76	104	134	162	190	218	248	276	304	332
21	49	77	105	135	163	191	219	249	277	305	333
22	50	78	106	136	164	192	220	250	278	306	334
23	51	79	107	137	165	193	221	251	279	307	335
24	52	80	108	138	166	194	222	252	280	308	336
25	53	81	109	139	167	195	223	253	281	309	337
26	54	82	110	140	168	196	224	254	282	310	338
27	55	83	111	141	169	197	225	255	283	311	339
28	56	84	112	142	170	198	226	256	284	312	340
29	57	85	113	143	171	199	227	257	285	313	341
30	58	86	114	144	172	200	228	258	286	314	342
31	59	87	115	145	173	201	229	259	287	315	343
32	60	88	116	146	174	202	230	260	288	316	344
33	61	89	117	147	175	203	231	261	289	317	345
34	62	90	118	148	176	204	232	262	290	318	346
35	63	91	119	149	177	205	233	263	291	319	347
36	64	92	120	150	178	206	234	264	292	320	348
37	65	93	121	151	179	207	235	265	293	321	349
38	66	94	122	152	180	208	236	266	294	322	350
39	67	95	123	153	181	209	237	267	295	323	351
40	68	96	124	154	182	210	238	268	296	324	352
41	69	97	125	155	183	211	239	269	297	325	353
42	70	98	126	156	184	212	240	270	298	326	354
43	71	99	127	157	185	213	241	271	299	327	355
44	72	100	128	158	186	214	242	272	300	328	356
45	73	101	129	159	187	215	243	273	301	329	357
46	74	102	130	160	188	216	244	274	302	330	358
47	75	103	131	161	189	217	245	275	303	331	359
364				365							
360		361		362		363					
366		367		368		369		370	371		372
373		374		375		376		377	378		379

Mandatory information

Bytes set to (FF)

Bytes set to (00)

As specified or (FF)

17.4.3 System Information

Bytes 380 to 385 are mandatory. Bytes 384 and 385 shall specify in binary notation the Logical Track Number of the last logical track of the User Zone. The total number of logical tracks in this zone equals the Logical Track Number of the last logical track of the User Zone increased by 1. For disks with 1 024-byte sectors, the Logical Track Number of the last logical

Copyright International Organization for Standardization
Provided by IHS under license with ISO
No reproduction or networking permitted without license from IHS
Not for Resale

track of the User Zone shall be 58 739. For disks with 512-byte sectors, the Logical Track Number of the last logical track of the User Zone shall be 55 769.

Bytes 380 to 383: Reserved

These bytes shall be set to (FF).

Byte 384

This byte shall be set to (E5) for 1 024-byte sector and (D9) for 512-byte sector, the most significant byte of the number of the last logical track of the User Zone.

Byte 385

This byte shall be set to (73) for 1 024-byte sector and (D9) for 512-byte sector, the least significant byte of the number of the last logical track of the User Zone.

Bytes 386 to 389

These bytes shall be set to (FF).

Bytes 390 to 399: Reserved

These bytes shall be set to (FF).

Bytes 400 to 476: Control bytes for partially embossed disks

This information is required for Type P-ROM and Type P-ROM-R and contains parameter values for bytes 0 to 76 of the DDS. The value of Byte 3 of the DDS may be chosen during initialization and need not agree with SFP Byte 403. These control bytes shall be defined by the manufacturer at the time the disk is manufactured. Bytes 414 to 421, which represent addresses of the PDL and SDL, shall be set to (FF).

For Types R/W, R/W-R, O-ROM, O-ROM-R, WO and WO-R these bytes shall be set to (FF).

Bytes 477 to 479: Reserved.

These bytes shall be set to (FF).

Bytes 480 to 511: Unspecified data

The contents of these bytes are not specified in this International Standard. They may contain an identification of the manufacturer. They shall be ignored in interchange.

18 Layout of the User Zone

18.1 General description of the User Zone

The User Zone data capacity per side is 1,014 Gbytes for disks with 1 024-byte sectors and 0,871 Gbytes for disks with 512-byte sectors. The spare sectors and the non-usable sectors are included in the above figures.

The location and size of the User Zone are specified in clause 17.

18.2 Divisions of the User Zone

The User Zone shall include four Defect Management Areas (DMA), two at the beginning of the zone and two at the end. The area between the two sets of DMAs is called the User Area.

The entire User Zone shall also be divided into bands as a result of the ZCAV organization of the disk.

Each of these bands shall contain the same number of physical tracks. Each such band is divided into logical tracks which have the same number of sectors. The number of logical tracks per band decreases from band to band moving from the outer radius to the inner radius.

When the sectors contain 1 024 user bytes, the User Zone shall be divided into 30 bands numbered 0 to 29 as shown in table 8 and 9.

When the sectors contain 512 bytes of user data, the User Zone shall be divided into 55 bands numbered 0 to 54 as shown in table 10 and 11.

Copyright International Organization for Standardization
Provided by IHS under license with ISO
No reproduction or networking permitted without license from IHS Not for Resale

The hierarchy is thus:

For 1 024-byte sector disks:	17 sectors	= 1 logical track
	1 320 to 2 596 logical tracks	= 1 band
	748 physical tracks	= 1 band
	30 bands	= the User Zone
For 512-byte sector disks:	31 sectors	= 1 logical track
	632 to 1 365 logical tracks	= 1 band
	403 physical tracks	= 1 band
	55 bands	= the User Zone

18.3 User Area

The Data fields in the User Area are intended for recording of user data.

The User Area shall consist of:

- a Rewritable Zone, or
- an Embossed Zone, or
- an Embossed Zone and a Rewritable zone, or
- a Write Once Zone.

The User Area shall begin with track 4 and end with track 58 727/ 55 757. However, at the boundaries between bands, it shall not include the last 12 tracks of a band, and it shall not include the first four tracks of the next band.

There shall be 150/110 spare logical tracks in the User Area.

In addition, the User Area shall be partitioned into groups of bands. This International Standard describes two alternatives for partitioning:

1. Each group resides in one band, i.e. there is a total of 30/55 groups.
2. The entire User Area forms one group.

Type R/W, R/W-R, O-ROM, O-ROM-R, WO and WO-R disks shall be partitioned according to either alternative 1 or alternative 2. Type P-ROM and P-ROM-R disks shall be partitioned according to alternative 1. See 18.6.2, 18.7.2, and 18.8.2.

Copyright International Organization for Standardization
Provided by IHS under license with ISO
No reproduction or networking permitted without license from IHS Not for Resale

Table 8 - 1 024-byte sector disks: 30 groups

Band Number	Sectors per rev.	Number of tracks per Band	Start Track	Buffer Start	Data Start	Parity Start	Spares Start	Buffer Start	Test Start	Buffer Start
0	59	2 596	0		4	2 440	2 579	2 584	2 588	2 592
DMA1			0							
DMA2			2							
1	58	2 552	2 596	2 596	2 600	4 994	5 131	5 136	5 140	5 144
2	57	2 508	5 148	5 148	5 152	7 504	7 639	7 644	7 648	7 652
3	56	2 464	7 656	7 656	7 660	9 970	10 103	10 108	10 112	10 116
4	55	2 420	10 120	10 120	10 124	12 392	12 524	12 529	12 533	12 537
5	54	2 376	12 540	12 540	12 544	14 770	14 899	14 904	14 908	14 912
6	53	2 332	14 916	14 916	14 920	17 104	17 231	17 236	17 240	17 244
7	52	2 288	17 248	17 248	17 252	19 394	19 519	19 524	19 528	19 532
8	51	2 244	19 536	19 536	19 540	21 640	21 763	21 768	21 772	21 776
9	50	2 200	21 780	21 780	21 784	23 842	23 963	23 968	23 972	23 976
10	49	2 156	23 980	23 980	23 984	26 000	26 119	26 124	26 128	26 132
11	48	2 112	26 136	26 136	26 140	28 114	28 231	28 236	28 240	28 244
12	47	2 068	28 248	28 248	28 252	30 184	30 299	30 304	30 308	30 312
13	46	2 024	30 316	30 316	30 320	32 210	32 323	32 328	32 332	32 336
14	45	1 980	32 340	32 340	32 344	34 192	34 303	34 308	34 312	34 316
15	44	1 936	34 320	34 320	34 324	36 130	36 239	36 244	36 248	36 252
16	43	1 892	36 256	36 256	36 260	38 024	38 131	38 136	38 140	38 144
17	42	1 848	38 148	38 148	38 152	39 874	39 979	39 984	39 988	39 992
18	41	1 804	39 996	39 996	40 000	41 680	41 783	41 788	41 792	41 796
19	40	1 760	41 800	41 800	41 804	43 442	43 543	43 548	43 552	43 556
20	39	1 716	43 560	43 560	43 564	45 160	45 259	45 264	45 268	45 272
21	38	1 672	45 276	45 276	45 280	46 834	46 931	46 936	46 940	46 944
22	37	1 628	46 948	46 948	46 952	48 464	48 559	48 564	48 568	48 572
23	36	1 584	48 576	48 576	48 580	50 050	50 143	50 148	50 152	50 156
24	35	1 540	50 160	50 160	50 164	51 592	51 683	51 688	51 692	51 696
25	34	1 496	51 700	51 700	51 704	54 090	54 179	54 184	54 188	54 192
26	33	1 452	53 196	53 196	53 200	54 544	54 631	54 636	54 640	54 644
27	32	1 408	54 648	54 648	54 652	55 954	56 039	56 044	56 048	56 052
28	31	1 364	56 056	56 056	56 060	57 320	57 403	57 408	57 412	57 416
29	30	1 320	57 420	57 420	57 424	58 642	58 723	58 732	58 736	
DMA3			58 728							
DMA4			58 730							

Copyright International Organization for Standardization
Provided by IHS under license with ISO
No reproduction or networking permitted without license from IHS
Not for Resale

Table 9 - 1 024-byte sector disks: 1 group

Band Number	Sectors per rev.	Number of tracks per Band	Start Track	Buffer Start	Data Start	Parity Start	Spares Start	Buffer Start	Test Start	Buffer Start
0	59	2 596	0		4			2 584	2 588	2 592
DMA1			0							
DMA2			2							
1	58	2 552	2 596	2 596	2 600			5 136	5 140	5 144
2	57	2 508	5 148	5 148	5 152			7 644	7 648	7 652
3	56	2 464	7 656	7 656	7 660			10 108	10 112	10 116
4	55	2 420	10 120	10 120	10 124			12 528	12 532	12 536
5	54	2 376	12 540	12 540	12 544			14 904	14 908	14 912
6	53	2 332	14 916	14 916	14 920			17 236	17 240	17 244
7	52	2 288	17 248	17 248	17 252			19 524	19 528	19 532
8	51	2 244	19 536	19 536	19 540			21 768	21 772	21 776
9	50	2 200	21 780	21 780	21 784			23 968	23 972	23 976
10	49	2 156	23 980	23 980	23 984			26 124	26 128	26 132
11	48	2 112	26 136	26 136	26 140			28 236	28 240	28 244
12	47	2 068	28 248	28 248	28 252			30 304	30 308	30 312
13	46	2 024	30 316	30 316	30 320			32 328	32 332	32 336
14	45	1 980	32 340	32 340	32 344			34 308	34 312	34 316
15	44	1 936	34 320	34 320	34 324			36 244	36 248	36 252
16	43	1 892	36 256	36 256	36 260			38 136	38 140	38 144
17	42	1 848	38 148	38 148	38 152			39 984	39 988	39 992
18	41	1 804	39 996	39 996	40 000			41 788	41 792	41 796
19	40	1 760	41 800	41 800	41 804			43 548	43 552	43 556
20	39	1 716	43 560	43 560	43 564			45 264	45 268	45 272
21	38	1 672	45 276	45 276	45 280			46 936	46 940	46 944
22	37	1 628	46 948	46 948	46 952			48 564	48 568	48 572
23	36	1 584	48 576	48 576	48 580			50 148	50 152	50 156
24	35	1 540	50 160	50 160	50 164			51 688	51 692	51 696
25	34	1 496	51 700	51 700	51 704			53 184	53 188	53 192
26	33	1 452	53 196	53 196	53 200			54 636	54 640	54 644
27	32	1 408	54 648	54 648	54 652	55 459		56 044	56 048	56 052
28	31	1 364	56 056	56 056	56 060	56 060		57 408	57 412	57 416
29	30	1 320	57 420	57 420	57 424	57 424	58 578	58 732	58 740	
DMA3			58 728							
DMA4			58 730							

Copyright International Organization for Standardization
Provided by IHS under license with ISO
No reproduction or networking permitted without license from IHS
Not for Resale

Table 10 - 512-byte sector disks: 55 groups

Band Number	Sectors per rev.	Number of tracks per Band	Start Track	Buffer Start	Data Start	Parity Start	Spares Start	Buffer Start	Test Start	Buffer Start
0	105	1 365	0		4	1 346	1 351	1 353	1 357	1 361
DMA1			0							
DMA2			2							
1	104	1 352	1 365	1 365	1 369	2 657	2 703	2 705	2 709	2 713
2	103	1 339	2 717	2 717	2 721	3 997	4 042	4 044	4 048	4 052
3	102	1 326	4 056	4 056	4 060	5 323	5 368	5 370	5 374	5 378
4	101	1 313	5 382	5 382	5 386	6 637	6 681	6 683	6 687	6 691
5	100	1 300	6 695	6 695	6 699	7 937	7 981	7 983	7 987	7 991
6	99	1 287	7 995	7 995	7 999	9 225	9 268	9 270	9 274	9 278
7	98	1 274	9 282	9 282	9 286	10 499	10 542	10 544	10 548	10 552
8	97	1 261	10 556	10 556	10 560	11 761	11 803	11 805	11 809	11 813
9	96	1 248	11 817	11 817	11 821	13 009	13 051	13 053	13 057	13 061
10	95	1 235	13 065	13 065	13 069	14 245	14 286	14 288	14 292	14 296
11	94	1 222	14 300	14 300	14 304	15 467	15 508	15 510	15 514	15 518
12	93	1 209	15 522	15 522	15 526	16 677	16 717	16 719	16 723	16 727
13	92	1 196	16 731	16 731	16 735	17 873	17 913	17 915	17 919	17 923
14	91	1 183	17 927	17 927	17 931	19 057	19 096	19 098	19 102	19 106
15	90	1 170	19 110	19 110	19 114	20 227	20 266	20 268	20 272	20 276
16	89	1 157	20 280	20 280	20 284	21 385	21 423	21 425	21 429	21 433
17	88	1 144	21 437	21 437	21 441	22 529	22 567	22 569	22 573	22 577
18	87	1 131	22 581	22 581	22 585	23 661	23 698	23 700	23 704	23 708
19	86	1 118	23 712	23 712	23 716	24 779	24 816	24 818	24 822	24 826
20	85	1 105	24 830	24 830	24 834	25 885	25 921	25 923	25 927	25 931
21	84	1 092	25 935	25 935	25 939	26 977	27 013	27 015	27 019	27 023
22	83	1 079	27 027	27 027	27 031	28 057	28 092	28 094	28 098	28 102
23	82	1 066	28 106	28 106	28 110	29 123	29 158	29 160	29 164	29 168
24	81	1 053	29 172	29 172	29 176	30 177	30 211	30 213	30 217	30 221
25	80	1 040	30 225	30 225	30 229	31 217	31 251	31 253	31 257	31 261
26	79	1 027	31 265	31 265	31 269	32 245	32 278	32 280	32 284	32 288
27	78	1 014	32 292	32 292	32 296	33 259	33 292	33 294	33 298	33 302
28	77	1 001	33 306	33 306	33 310	34 261	34 293	34 295	34 299	34 303
29	76	988	34 307	34 307	34 311	35 249	35 281	35 283	35 287	35 291
30	75	975	35 295	35 295	35 299	36 225	36 256	36 258	36 262	36 266
31	74	962	36 270	36 270	36 274	37 187	37 218	37 220	37 224	37 228
32	73	949	37 232	37 232	37 236	38 137	38 167	38 169	38 173	38 177
33	72	936	38 181	38 181	38 185	39 074	39 104	39 106	39 110	39 114
34	71	923	39 117	39 117	39 121	39 997	40 026	40 028	40 032	40 036
35	70	910	40 040	40 040	40 044	40 907	40 936	40 938	40 942	40 946

Copyright International Organization for Standardization
Provided by IHS under license with ISO
No reproduction or networking permitted without license from IHS
Not for Resale

Table 10 - 512-byte sector disks: 55 groups (cont.)

Band Number	Sectors per rev.	Number of tracks per Band	Start Track	Buffer Start	Data Start	Parity Start	Spares Start	Buffer Start	Test Start	Buffer Start
36	69	897	40 950	40 950	40 954	41 805	41 833	41 835	41 839	41 843
37	68	884	41 847	41 847	41 851	42 689	42 717	42 719	42 723	42 727
38	67	871	42 731	42 731	42 735	43 561	43 588	43 590	43 594	43 598
39	66	858	43 602	43 602	43 606	44 419	44 446	44 448	44 452	44 456
40	65	845	44 460	44 460	44 464	45 265	45 291	45 293	45 297	45 301
41	64	832	45 305	45 305	45 309	46 123	46 097	46 125	46 129	46 133
42	63	819	46 137	46 137	46 141	46 917	46 917	46 944	46 948	46 952
43	62	806	46 956	46 956	46 960	47 723	47 723	47 750	47 754	47 758
44	61	793	47 762	47 762	47 766	48 517	48 541	48 543	48 547	48 551
45	60	780	48 555	48 555	48 559	49 297	49 321	49 323	49 327	49 331
46	59	767	49 335	49 335	49 339	50 065	50 088	50 090	50 094	50 098
47	58	754	50 102	50 102	50 106	50 819	50 842	50 844	50 848	50 852
48	57	741	50 856	50 856	50 860	51 561	51 583	51 585	51 589	51 593
49	56	728	51 597	51 597	51 601	52 289	52 311	52 313	52 317	52 321
50	55	715	52 325	52 325	52 329	53 005	53 026	53 028	53 032	53 036
51	54	702	53 040	53 040	53 040	53 707	53 728	53 730	53 734	53 738
52	53	689	53 742	53 742	53 746	54 397	54 417	54 419	54 423	54 427
53	52	676	54 431	54 431	54 435	55 073	55 093	55 095	55 099	55 103
54	51	663	55 107	55 107	55 111	55 737	55 756	55 762	55 766	
DMA3			55 758							
DMA4			55 760							

Copyright International Organization for Standardization
Provided by IHS under license with ISO
No reproduction or networking permitted without license from IHS Not for Resale

Table 11 - 512-byte sector disks: 1 group

Band Number	Sectors per rev.	Number of tracks per Band	Start Track	Buffer Start	Data Start	Parity Start	Spares Start	Buffer Start	Test Start	Buffer Start
0	105	1 365	0		4			1 353	1 357	1 361
DMA1			0							
DMA2			2							
1	104	1 352	1 365	1 365	1 369			2 705	2 709	2 713
2	103	1 339	2 717	2 717	2 721			4 044	4 048	4 052
3	102	1 326	4 056	4 056	4 060			5 370	5 374	5 378
4	101	1 313	5 382	5 382	5 386			6 683	6 687	6 691
5	100	1 300	6 695	6 695	6 699			7 983	7 987	7 991
6	99	1 287	7 995	7 995	7 999			9 270	9 274	9 278
7	98	1 274	9 282	9 282	9 286			10 544	10 548	10 552
8	97	1 261	10 556	10 556	10 560			11 805	11 809	11 813
9	96	1 248	11 817	11 817	11 821			13 053	13 057	13 061
10	95	1 235	13 065	13 065	13 069			14 288	14 292	14 296
11	94	1 222	14 300	14 300	14 304			15 510	15 514	15 518
12	93	1 209	15 522	15 522	15 526			16 719	16 723	16 727
13	92	1 196	16 731	16 731	16 735			17 915	17 919	17 923
14	91	1 183	17 927	17 927	17 931			19 098	19 102	19 106
15	90	1 170	19 110	19 110	19 114			20 268	20 272	20 276
16	89	1 157	20 280	20 280	20 284			21 425	21 429	21 433
17	88	1 144	21 437	21 437	21 441			22 569	22 573	22 577
18	87	1 131	22 581	22 581	22 585			23 700	23 704	23 708
19	86	1 118	23 712	23 712	23 716			24 818	24 822	24 826
20	85	1 105	24 830	24 830	24 834			25 923	25 927	25 931
21	84	1 092	25 935	25 935	25 939			27 015	27 019	27 023
22	83	1 079	27 027	27 027	27 031			28 094	28 098	28 102
23	82	1 066	28 106	28 106	28 110			29 160	29 164	29 168
24	81	1 053	29 172	29 172	29 176			30 213	30 217	30 221
25	80	1 040	30 225	30 225	30 229			31 253	31 257	31 261
26	79	1 027	31 265	31 265	31 269			32 280	32 284	32 288
27	78	1 014	32 292	32 292	32 296			33 294	33 298	33 302
28	77	1 001	33 306	33 306	33 310			34 295	34 299	34 303
29	76	988	34 307	34 307	34 311			35 283	35 287	35 291
30	75	975	35 295	35 295	35 299			36 258	36 262	36 266
31	74	962	36 270	36 270	36 274			37 220	37 224	37 228
32	73	949	37 232	37 232	37 236			38 169	38 173	38 177
33	72	936	38 181	38 181	38 185			39 105	39 109	39 113
34	71	923	39 117	39 117	39 121			40 028	40 032	40 036

Copyright International Organization for Standardization
Provided by IHS under license with ISO
No reproduction or networking permitted without license from IHS
Not for Resale

Table 11 - 512-byte sector disks: 1 group (cont.)

Band Number	Sectors per rev.	Number of tracks per Band	Start Track	Buffer Start	Data Start	Parity Start	Spares Start	Buffer Start	Test Start	Buffer Start
35	70	910	40 040	40 040	40 044			40 938	40 942	40 946
36	69	897	40 950	40 950	40 954			41 835	41 839	41 843
37	68	884	41 847	41 847	41 851			42 719	42 723	42 727
38	67	871	42 731	42 731	42 735			43 590	43 594	43 598
39	66	858	43 602	43 602	43 606			44 448	44 452	44 456
40	65	845	44 460	44 460	44 464			45 293	45 297	45 301
41	64	832	45 305	45 305	45 309			46 125	46 129	46 133
42	63	819	46 137	46 137	46 141			46 944	46 948	46 952
43	62	806	46 956	46 956	46 960			47 750	47 754	47 758
44	61	793	47 762	47 762	47 766			48 543	48 547	48 551
45	60	780	48 555	48 555	48 559			49 323	49 327	49 331
46	59	767	49 335	49 335	49 339			50 090	50 094	50 098
47	58	754	50 102	50 102	50 106			50 844	50 848	50 852
48	57	741	50 856	50 856	50 860			51 585	51 589	51 593
49	56	728	51 597	51 597	51 601			52 313	52 317	52 321
50	55	715	52 325	52 325	52 329			53 028	53 032	53 036
51	54	702	53 040	53 040	53 044			53 730	53 734	53 738
52	53	689	53 742	53 742	53 746	53 973		54 419	54 423	54 427
53	52	676	54 431	54 431	54 435	54 435		55 095	55 099	55 103
54	51	663	55 107	55 107	55 111	55 111	55 648	55 762	55 766	
DMA3			55 758							
DMA4			55 760							

Copyright International Organization for Standardization
Provided by IHS under license with ISO
No reproduction or networking permitted without license from IHS
Not for Resale

18.4 Defect Management Areas (DMAs)

The four Defect Management Areas contain information on the structure of the User Area and on the defect management. The locations of the DMAs are shown in tables 8 to 11.

Each DMA shall have a length of 25 sectors for 1 024-byte sectors and 46 sectors for 512-byte sectors. The addresses of the first sector of each DMA are given in table 12.

Table 12 - Location of the DMAs

DMA Number	1 024-byte sectors		512-byte sectors	
	track numbers	sector numbers	track numbers	sector numbers
DMA 1	0	0	0	0
DMA 2	2	0	2	0
DMA 3	58 728	0	55 758	0
DMA 4	58 730	0	55 760	0

For Types R/W, R/W-R, P-ROM, P-ROM-R, WO and WO-R, the unused sectors that lie between DMA1 and DMA2 and those that lie between DMA3 and DMA4, are reserved for future standardization.

Each DMA shall contain a Disk Definition Structure, a Primary Defect List (PDL) and a Secondary Defect List (SDL). The contents of the four PDLs shall be identical and the contents of the SDLs shall be identical. The only differences between the four DDSs shall be the pointers to each associated PDL and SDL.

After initialization, each DMA shall have the following contents:

- the first sector shall contain the DDS;
- the second sector shall be the first sector of the PDL for Types R/W, R/W-R, P-ROM, P-ROM-R, WO and WO-R;
- the SDL shall begin in the first sector following the PDL for Types R/W, R/W-R, P-ROM, P-ROM-R, WO and WO-R.

The lengths of the PDL and SDL are determined by the number of entries in them. The contents of the remaining sectors of the DMAs after the SDL are not specified for Types R/W, R/W-R, P-ROM, P-ROM-R, WO and WO-R, and shall be ignored during interchange.

The start address of a PDL and that of the SDL within each DDS shall reference the PDL and the SDL in the same DMA.

For Type O-ROM and O-ROM-R, except for the DDS sectors, the Data fields of all sectors in the DMAs shall be set to (FF).

18.5 Disk Definition Structure

The DDS shall consist of a table with a length of one sector. It specifies the method of initialization of the disk, the division of the User Area into groups, the kind of data sectors within each group, and the start addresses of the PDL and SDL. The DDS shall be recorded in the first sector of each DMA at the end of initialization of the disk. On Type O-ROM and O-ROM-R disks, the DDS shall be embossed.

For Type P-ROM and P-ROM-R, the values of some of the DDS parameters are specified by the manufacturer and recorded in the control SFP Zones.

Tables 13 and 14 summarize the information that shall be recorded in each of the four DDSs.

Copyright International Organization for Standardization
Provided by IHS under license with ISO
No reproduction or networking permitted without license from IHS
Not for Resale

Table 13 - Byte assignment of the Disk Definition Structure (1 024-byte sector)

Byte No.	Content	Mandatory Settings			
		R/W, R/W-R	WO, WO-R	O-ROM, O-ROM-R	P-ROM P-ROM-R
0	DDS Identifier	(0A)	(05)	(0A)	(0A)
1	DDS Identifier	(0A)	(05)	(0A)	(0A)
2	Reserved	(00)	(00)	(00)	(00)
3	Fully Embossed Disk Certified Disk Not Certified	n.a. (01) (02)	n.a. (01) (02)	(00) n.a. n.a.	n.a. (01) (02)
4	Number of Groups MSB	(00)	(00)	(00)	(00)
5	Number of Groups LSB	(01) or (1E)	(01) or (1E)	(01) or (1E)	(1E)
6	Reserved	(00)	(00)	(00)	(00)
7	Reserved	(00)	(00)	(00)	(00)
8	Reserved	(00)	(00)	(00)	(00)
9	Reserved	(00)	(00)	(00)	(00)
10	Reserved	(00)	(00)	(00)	(00)
11	Reserved	(00)	(00)	(00)	(00)
12	Reserved	(00)	(00)	(00)	(00)
13	Reserved	(00)	(00)	(00)	(00)
14	Start of PDL, Track MSB	-	-	(FF)	-
15	Start of PDL, Track	-	-	(FF)	-
16	Start of PDL, Track LSB	-	-	(FF)	-
17	Start of PDL, Sector Number	-	-	(FF)	-
18	Start of SDL, Track MSB	-	-	(FF)	-
19	Start of SDL, Track	-	-	(FF)	-
20	Start of SDL, Track LSB	-	-	(FF)	-
21	Start of SDL, Sector Number	-	-	(FF)	-
22	Band 0 Type	(01)	(04)	(02)	(01)
23	Band 1 Type	(01)	(04)	(02)	(01) or (02)
	:	:	:	:	:
50	Band 28 Type	(01)	(04)	(02)	(01) or (02)
51	Band 29 Type	(01)	(04)	(02)	(01) or (02)
52 to 1023		(00)	(00)	(00)	(00)

In the above table, the symbol (-) means that the appropriate value is to be entered in the DDS, and n.a. means "not applicable".

Copyright International Organization for Standardization
Provided by IHS under license with ISO
No reproduction or networking permitted without license from IHS Not for Resale

Table 14 - Byte assignment of the Disk Definition Structure (512-byte sector)

Byte No.	Content	Mandatory Settings			
		R/W, R/W-R	WO, WO-R	O-ROM O-ROM-R	P-ROM P-ROM-R
0	DDS Identifier	(0A)	(05)	(0A)	(0A)
1	DDS Identifier	(0A)	(05)	(0A)	(0A)
2	Reserved	(00)	(00)	(00)	(00)
3	Fully Embossed Disk Certified Disk Not Certified	n.a. (01) (02)	n.a. (01) (02)	(00) n.a. n.a.	n.a. (01) (02)
4	Number of Groups MSB	(00)	(00)	(00)	(00)
5	Number of Groups LSB	(01) or (37)	(01) or (37)	(01) or (37)	(37)
6	Reserved	(00)	(00)	(00)	(00)
7	Reserved	(00)	(00)	(00)	(00)
8	Reserved	(00)	(00)	(00)	(00)
9	Reserved	(00)	(00)	(00)	(00)
10	Reserved	(00)	(00)	(00)	(00)
11	Reserved	(00)	(00)	(00)	(00)
12	Reserved	(00)	(00)	(00)	(00)
13	Reserved	(00)	(00)	(00)	(00)
14	Start of PDL, Track MSB	-	-	(FF)	-
15	Start of PDL, Track	-	-	(FF)	-
16	Start of PDL, Track LSB	-	-	(FF)	-
17	Start of PDL, Sector Number	-	-	(FF)	-
18	Start of SDL, Track MSB	-	-	(FF)	-
19	Start of SDL, Track	-	-	(FF)	-
20	Start of SDL, Track LSB	-	-	(FF)	-
21	Start of SDL, Sector Number	-	-	(FF)	-
22	Band 0 Type	(01)	(04)	(02)	(01)
23	Band 1 Type	(01)	(04)	(02)	(01) or (02)
	:	:	:	:	:
75	Band 53 Type	(01)	(04)	(02)	(01) or (02)
76	Band 54 Type	(01)	(04)	(02)	(01) or (02)
77 to 511		(00)	(00)	(00)	(00)

In the above table, the symbol (-) means that the appropriate value is to be entered in the DDS, and n.a. means "not applicable".

18.6 Rewritable Zone

Types R/W, R/W-R, P-ROM and P-ROM-R disks shall have a Rewritable Zone. The Rewritable Zone is intended for the user to write data into. The Data field of all sectors in this zone shall not contain any embossed data.

Copyright International Organization for Standardization
Provided by IHS under license with ISO
No reproduction or networking permitted without license from IHS
Not for Resale

18.6.1 Location

For Types R/W and R/W-R the Rewritable Zone shall extend from sector 0 of track 4 to the last sector of track 58 727/55 757.

For Types P-ROM and P-ROM-R the Rewritable Zone shall extend from sector 0 of track 4 to the last sector of the last track of the Band preceding the first Band of the Embossed Zone.

18.6.2 Partitioning

During initialization of the disk, the User Zone shall be partitioned into 1 or 30/55 consecutive groups (see tables 8 to 11). Each group shall comprise tracks of data sectors followed by tracks of spare sectors. The total number of spare sectors shall not exceed 2 048.

18.7 Embossed Zone

Types P-ROM, P-ROM-R, and O-ROM, O-ROM-R shall have an Embossed Zone. It shall contain data embossed by the manufacturer of the disk. The layout of all sectors in this zone shall be as specified in clause 15.

18.7.1 Location

For Types P-ROM and P-ROM-R the Embossed Zone shall start at sector 0 of the Data Start track (table 8 to 11) of the Band which follows the rewritable zone. The last track of the Embossed Zone on Types P-ROM and P-ROM-R shall be track 58 727/55 757.

For Types O-ROM and O-ROM-R, the Embossed Zone shall start at sector 0 of track 4 and end at the last sector of track 58 727/55 757.

18.7.2 Partitioning

Types O-ROM and O-ROM-R shall be partitioned into 1 or 30/55 groups.

Types P-ROM and P-ROM-R shall be partitioned into 30/55 groups. The rewritable zone shall start in group 0. Both the Rewritable Zone and the Embossed Zone shall have been partitioned into consecutive groups constructed from the bands.

In the Embossed Zone, each group shall comprise data sectors and parity sectors. Both the data sector and the parity sector areas of all groups shall start at sector 0.

Each group shall comprise full tracks of data sectors followed by full tracks of spare sectors or parity sectors as shown in tables 7 to 10.

For Types P-ROM, P-ROM-R and O-ROM, O-ROM-R, there may be a number of tracks remaining after the parity sector areas in each group. These remaining tracks shall be located after the track that contains the final parity sector. The Data field of any unused sector within the Embossed Zone shall have all user data bytes set to (FF), except tracks 58 726 and 58 727 for 1 024-byte sectors, or 55 756 and 55 757 for 512-byte sectors of Type P-ROM and P-ROM-R disks, the Data Fields of which, as well as the VFO_3 fields, shall contain no embossed data.

18.7.3 Parity sectors

The embossed parity sectors provide an error correction system for embossed data over the user data bytes and DMP bytes 1 025 to 1 036 or 513 to 524 of each sector in addition to the ECC. They allow the drive to correct one sector on a track that cannot be corrected by the ECC, assuring a high data integrity. If more than one sector on a track cannot be corrected by ECC, then it is not possible to recover any of these defective sectors by the use of parity sectors.

The Data field of parity sectors contain 1 036/524 (512-byte sector) parity bytes (PB), calculated as an Exclusive OR (⊕) over the user data bytes and DMP bytes 1 025 to 1 036 or 513 to 524 (DB), of the data sectors on one track of the group.

The algorithm shall be

$$PB_{T,n} = DB_{t,0,n} \oplus DB_{t,1,n} \oplus \ldots DB_{t,j,n}$$

where

$1 \le t \le m$ {Number of Embossed data tracks}
$j = 16$ or 30
$1 \le n \le 1\,036$ or 524

Copyright International Organization for Standardization
Provided by IHS under license with ISO
No reproduction or networking permitted without license from IHS Not for Resale

$PB_{T.n}$ is byte A_n of Parity Sector T, and $DB_{t,j,n}$ is byte A_n of sector j on track t of the group. A_n is defined in annex F. The parity bytes are calculated over the user data bytes and bytes 513 to 516, excluding the Resync bytes. The CRC, ECC, and Resync bytes as defined in annex F shall be required with each parity sector.

The parity sectors for each track of the group shall be stored consecutively in the sectors allocated to them in each Band, starting with the first sector. The first parity sector of a Band is associated with the first track of the data sectors of the same Band, the second parity sector is associated with the second track of the data sectors, and so on until all tracks with data sectors have an associated Parity Sector. The contents of the Data field of the unused parity sectors shall be set to (FF) and shall contain data complying with the layout as given in annex F.

18.8 Write Once Zone

Types WO and WO-R shall contain a Write Once Zone. The Write Once Zone is intended for the user to write data into. The Data field of all sectors in this zone shall not contain any embossed data.

18.8.1 Location

The Write Once Zone shall extend from sector 0 of track 4 to the last sector of track 58 727 /55 757. Every band of these disks shall be recorded in bytes 22 to 51/76 of the DDS as being Write Once.

18.8.2 Partitioning

During initialization of the disk, the Write Once Zone shall be partitioned into 1 or 30/55 consecutive groups. If one group is used, it shall span the entire Write Once Zone; if 30/55 Bands are used, each Band shall comprise full tracks of data sectors followed by full tracks of spare sectors.

19 Defect Management in the Rewritable and Write Once Zones

Defective sectors on the disk shall be replaced by good sectors according to the defect management scheme described below. Each side of the disk shall be initialized before use. This International Standard allows media initialization with or without certification. Defective sectors found during certification are handled by a Sector Slipping Algorithm. Defective sectors found after initialization are handled by a Linear Replacement Algorithm. The total number of defective sectors on a side of the disk, replaced by both algorithms, shall not be greater than 2 048.

19.1 Initialization of the disk

During initialization of the disk, the four DMAs are recorded prior to the first use of the disk. The User Area is divided into Bands, each containing data sectors and spare sectors. Media initialization can include a certification of the rewritable Bands and Write Once Bands, whereby defective sectors are identified and skipped.

For Type WO and WO-R disks only a single initialization is allowed. Once the DMAs are recorded, it indicates that the disk is initialized and that no further initialization is permitted. All sectors in the write once zone shall be in the erased state at the end of initialization.

All DDS parameters shall be recorded in the four DDS sectors. The PDL and SDL shall be recorded in the four DMAs. The content of the PDLs and SDLs are shown in tables 15 and 16.

19.2 Certification

If the disk is certified, the certification shall be applied to all sectors of rewritable Bands in the User Area. The method of certification is not stated by this International Standard. It may involve erasing, writing, and reading of sectors. Defective sectors found during certification shall be handled by the Slipping Algorithm (see 19.2.1) or, where applicable, by the Linear Replacement Algorithm (see 19.2.2). Defective sectors shall not be used for reading or writing. Guidelines for replacing defective sectors are given in annex S.

19.2.1 Slipping Algorithm

The Slipping Algorithm shall be applied individually to each and every band on the disk if certification is performed.

A defective data sector found during certification shall be replaced by the first good sector following the defective sector, and so causes a slip of one sector towards the end of the band. The last data sectors will slip into the spare sector area. The address

Copyright International Organization for Standardization
Provided by IHS under license with ISO
No reproduction or networking permitted without license from IHS
Not for Resale

of the defective sector is written in the PDL. If no defective sectors are found during certification, an empty PDL shall be recorded.

The addresses of spare sectors, beyond the last data sector slipped into the spare area (if any), which are found to be defective during certification shall be recorded in the PDL. Thus, the number of available spare sectors is diminished accordingly.

If the spare sector area of a band becomes exhausted during certification, the defective sector shall be handled by the Linear Replacement Algorithm. This process involves assigning a replacement sector from the spare area of another band and cannot be accomplished until the other band has been certified. This is due to the fact that the next available spare sector is not known until its group is certified, i.e. the Slipping Algorithm has been applied.

19.2.2 Linear Replacement Algorithm

The Linear Replacement Algorithm is used to handle defective sectors found after certification. It is also used during certification in the event of the spare area of a Band becoming exhausted.

The defective sector shall be replaced by the first available spare sector of the Band. If a replacement sector is found to be defective, it shall be replaced by the next available spare sector in that band. The addresses of the defective sector and the replacement sector shall be recorded in the SDL.

If there are no spare sectors left in the Band, the defective sector shall be replaced by the first available spare sector of another Band.

The addresses of sectors already recorded in the PDL shall not be recorded in the SDL.

If a replacement sector listed in the SDL is later found to be defective, it shall be dealt with by making a new entry in the SDL indicating a replacement sector for that defective sector.

19.3 Disks not certified

The Linear Replacement Algorithm is also used to handle sectors found defective on disks which have not been certified.

The defective sector shall be replaced by the first available spare sector of the Band. If there are no spare sectors left in the Band, the defective data and spare sector shall be replaced by the first available spare sector of another Band. The addresses of the defective sector and the replacement sector shall be recorded in the SDL. If a replacement sector is found to be defective, it shall be replaced by the next available spare sector in that Band.

If a replacement sector listed in the SDL is later found to be defective, it shall be dealt with by making a new entry in the SDL indicating a replacement sector for that defective sector.

19.4 Write procedure

When writing or reading data in the sectors of a Band, all defective sectors listed in the PDL shall be skipped and the data shall be written in the next data sector according to the Slipping Algorithm. If a sector to be written is listed in the SDL, the data shall be written in the spare sector pointed to by the SDL, according to the Linear Replacement Algorithm.

For Type WO and WO-R after initialization, all sectors in the User Area shall be in the erased state. Erasing of sectors in the User Area after initialization is not permitted.

Before writing a sector in the User Area of a Type WO, it shall be determined whether or not the sector has been written. If the sector has been written, a write operation is not permitted. During write operations, sectors shall always be recorded with DMP, CRC, and ECC bytes as specified by this International Standard. See also annex V for guidelines for the use of Type WO.

19.5 Primary Defect List (PDL)

The PDL shall consist of bytes specifying

- the length of the PDL,
- the sector addresses of defective sectors, identified at initialization, in ascending order of track and sector addresses.

Table 15 shows the PDL byte layout. All remaining bytes of the last sector in which the Primary Defect List is recorded, shall be set to (FF). If no defective sectors are detected, then the first defective sector address is set to (FF) and bytes specifying the number of entries are set to (00).

Copyright International Organization for Standardization
Provided by IHS under license with ISO
No reproduction or networking permitted without license from IHS Not for Resale

During initialization, a PDL shall be recorded; this PDL may be empty.

Table 15 - Primary Defect List

Byte No.	Description
0	(00) PDL Identifier
1	(01) PDL Identifier
2	Number of entries MSB (each entry is 4 bytes lond)
3	Number of entries LSB (If bytes 2 and 3 are (00), byte 3 is the end of the PDL)
4	Address of the first defective sector (track number MSB)
5	Address of the first defective sector (track number)
6	Address of the first defective sector (track number LSB)
7	Address of the first defective sector (sector number)
.	.
.	.
.	.
n-3	Address of the ((*n*-3)/4)th defective sector (track number MSB)
n-2	Address of the ((*n*-3)/4)th defective sector (track number)
n-1	Address of the ((*n*-3)/4)th defective sector (track number LSB)
n	Address of the ((*n*-3)/4)th defective sector (sector number)

19.6 Secondary Defect List (SDL)

The SDL is used to record the addresses of data and spare sectors which have become defective after initialization and those of their respective replacements. Eight bytes are used for each entry. The first 4 bytes specify the address of the defective sector and the next 4 bytes specify the address of the replacement sector.

The SDL shall consist of bytes identifying the SDL, specifying the length of the SDL, and of a list containing the addresses of defective sectors and those of their replacement sectors. The addresses of the data and spare defective sectors shall be in ascending order. Table 16 shows the SDL layout. All remaining bytes of the last sector in which the SDL is recorded shall be set to (FF). An empty SDL shall consist of bytes 0 to 3 as shown in table 16; bytes 2 and 3 shall be set to (00).

Copyright International Organization for Standardization
Provided by IHS under license with ISO
No reproduction or networking permitted without license from IHS
Not for Resale

Table 16 - Secondary Defect List

Byte No.	Description
0	(00) SDL Identifier
1	(02) SDL Identifier
2	Number of addresses in the SDL, MSB (each entry is 8 bytes long)
3	Number of addresses in the SDL, LSB (If bytes 2 and 3 are set to (00), byte 3 is the end of the SDL)
4	Address of the first defective sector (track number, MSB)
5	Address of the first defective sector (track number)
6	Address of the first defective sector (track number, LSB)
7	Address of the first defective sector (sector number)
8	Address of the first replacement sector (track number, MSB)
9	Address of the first replacement sector (track number)
10	Address of the first replacement sector (track number, LSB)
11	Address of the first replacement sector (sector number)
.	.
.	.
.	.
n-7	Address of the last defective sector (track number, MSB)
n-6	Address of the last defective sector (track number)
n-5	Address of the last defective sector (track number, LSB)
n-4	Address of the last defective sector (sector number)
n-3	Address of the last replacement sector (track number, MSB)
n-2	Address of the last replacement sector (track number)
n-1	Address of the last replacement sector (track number, LSB)
n	Address of the last replacement sector (sector number)

Copyright International Organization for Standardization
Provided by IHS under license with ISO
No reproduction or networking permitted without license from IHS
Not for Resale

Section 4 : Characteristics of embossed information

20 Method of testing

The format of the embossed information on the disk is defined in clauses 13 to 18. Clauses 21 to 24 specify the requirements for the signals from grooves, Headers, embossed data, and Control Track PEP marks, as obtained when using the Reference Drive specified in clause 9.

Clauses 21 to 24 specify the average quality of the embossed information over the sector recorded according to the sector format defined in clause 15 and 16. Local deviations from the specified values, called defects, can cause tracking errors, erroneous Headers, or errors in the Data fields. These errors are covered in section 6.

20.1 Environment

All signals specified in clauses 21 to 24 shall be within their specified ranges with the cartridge in any environment in the range of allowed operating environments defined in 8.1.2.

20.2 Use of the Reference Drive

All signals specified in clauses 21 to 24 shall be measured in the indicated channels of the Reference Drive. The drive shall have the following characteristics for the purpose of these tests.

20.2.1 Optics and mechanics

The focused optical beam shall have the properties defined in 9.2 a) to f). The disk shall rotate as specified in 9.5.

20.2.2 Read power

The read power is the optical power incident at the entrance surface, used when reading, and is specified as follows for the stated zones (see clause 17):

a) PEP Zone

The read power shall not exceed the value specified in 17.3.

b) SFP Zone

The read power shall not exceed the value given in byte 6 of the PEP Zone (see 17.3.2.1.4).

c) User zone

The read power shall not exceed the value given in byte 21 of the SFP Zone (see 17.4.2).

20.2.3 Read channels

The drive shall have a read Channel, in which the total amount of light in the exit pupil of the objective lens is measured. This Channel shall have the implementation as given by Channel 1 in 9.1.

20.2.4 Tracking

During the measurement of the signals, the focus of the optical beam shall have an axial deviation of not more than

$$e_{max} \text{ (axial)} = 1{,}0 \text{ mm}$$

from the recording layer, and it shall have a radial deviation of not more than

$$e_{max} \text{ (radial)} = 0{,}10 \text{ mm}$$

from the centre of a track.

The radial tracking servo used for this measurement requires a higher performance than that specified in 11.4.8.

20.3 Definition of signals

All signals are linearly related to currents through a photodiode detector, and are therefore linearly related to the optical power falling on the detector.

Copyright International Organization for Standardization
Provided by IHS under license with ISO
No reproduction or networking permitted without license from IHS
Not for Resale

©ISO/IEC

The signals from the two halves of the split photodiode detector in the Tracking Channel are indicated by I_1 and I_2. The signals in the Tracking Channel are referenced to the average signal $(I_1 + I_2)_a$, which is the sum of the signals obtained from an unrecorded ungrooved area in the PEP Zone.

The signals in Channel 1 are referenced to the signal I_0, which is the average signal in Channel 1 from an unrecorded area in the PEP Zone.

Figure 24 shows the signals specified in clauses 21 to 24.

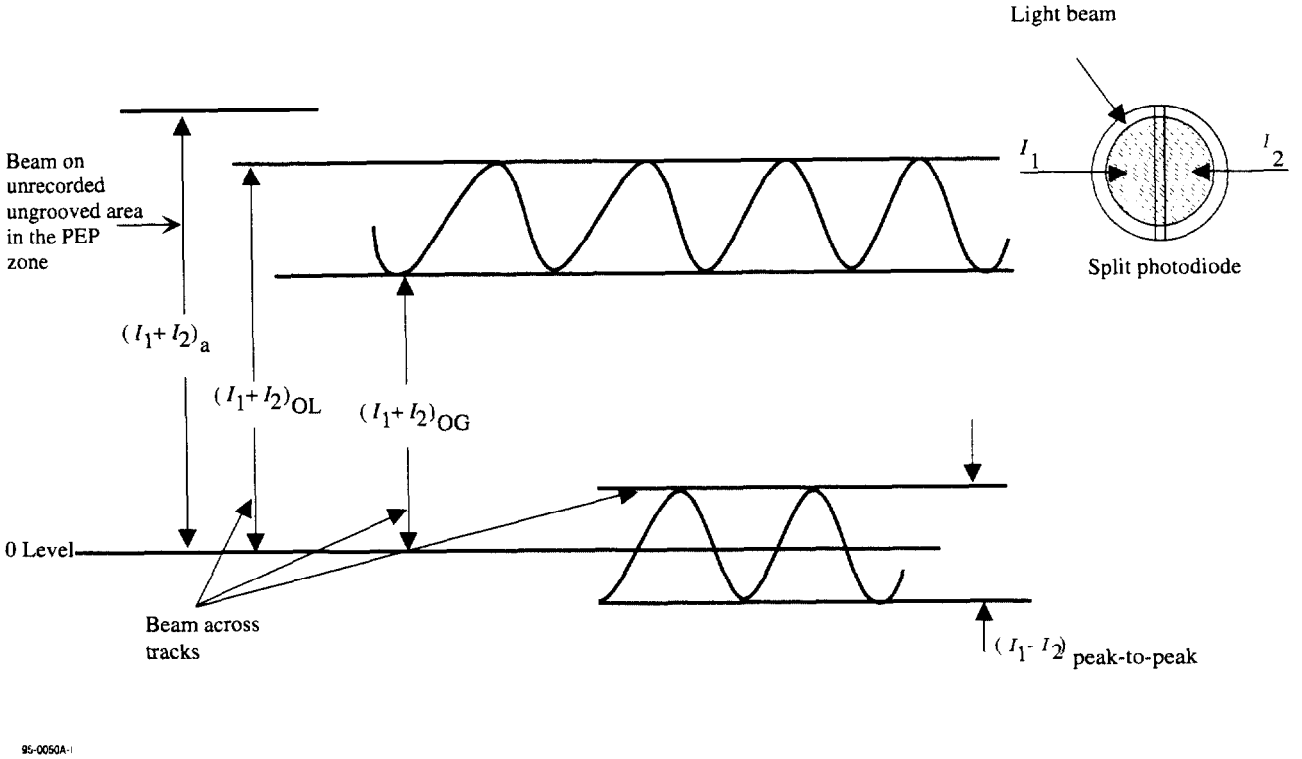

Figure 24A - Signals from grooves in the tracking Channel

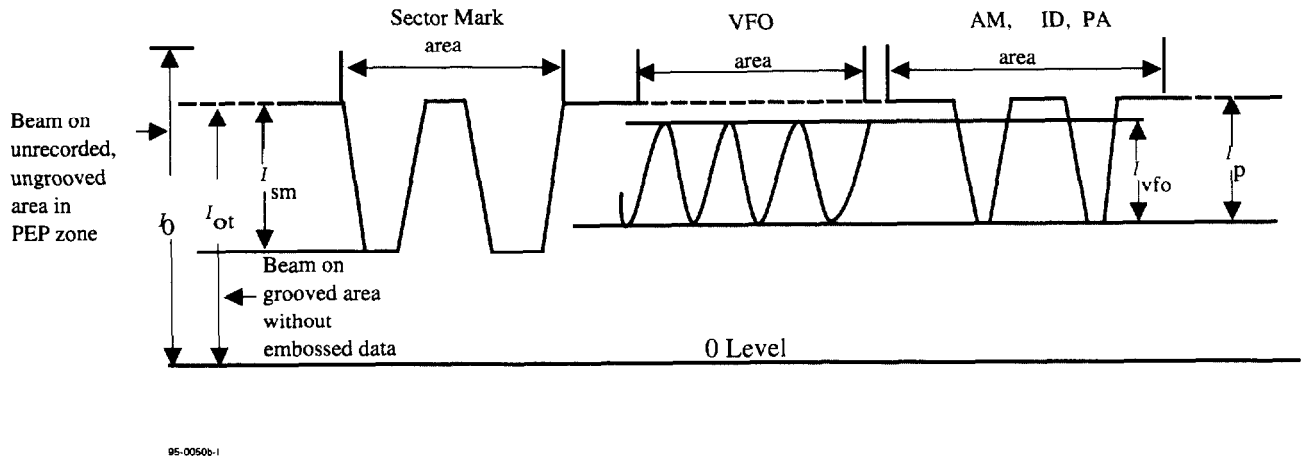

Figure 24B - Signals from Headers in Channel 1

Figure 24 - Illustration of the various parameters for read characteristics

Copyright International Organization for Standardization
Provided by IHS under license with ISO
No reproduction or networking permitted without license from IHS
Not for Resale

21 Signal from grooves

The signals $(I_1 + I_2)$ and $(I_1 - I_2)$ shall be filtered in order that frequencies above 1 MHz are attenuated by at least 40 dB thereby eliminating the effect of modulation due to embossed marks.

21.1 Cross-track signal modulation ratio

The cross-track signal is the sinusoidal sum signal $(I_1 + I_2)$ in the Tracking Channel, when the focus of the optical beam crosses the tracks. The signal can be used by the drive to locate the centre of the tracks. The peak-to-peak value of the cross-track signal shall meet the following requirements:

a) in areas containing embossed Headers and embossed Recording fields:

Parallel polarization in the User Zone

$$0{,}08 \leq [(I_1 + I_2)_{OL} - (I_1 + I_2)_{OG}] / (I_1 + I_2)_a \leq 0{,}50$$

Parallel polarization outside the User Zone

$$0{,}05 \leq [(I_1 + I_2)_{OL} - (I_1 + I_2)_{OG}] / (I_1 + I_2)_a \leq 0{,}50$$

Perpendicular polarization

$$0{,}10 \leq [(I_1 + I_2)_{OL} - (I_1 + I_2)_{OG}] / (I_1 + I_2)_a \leq 0{,}50$$

b) in grooved areas in the Formatted Zone without embossed Recording fields:

Parallel polarization

$$0{,}20 \leq [(I_1 + I_2)_{OL} - (I_1 + I_2)_{OG}] / (I_1 + I_2)_a \leq 0{,}60$$

Perpendicular polarization

$$0{,}25 \leq [(I_1 + I_2)_{OL} - (I_1 + I_2)_{OG}] / (I_1 + I_2)_a \leq 0{,}70$$

where I_1 and I_2 are the outputs of the two halves of the split diode detector in the Tracking Channel (see clause 9). $(I_1 + I_2)_{OG}$ indicates the minimum signal when the beam crosses the tracks and $(I_1 + I_2)_{OL}$ indicates the maximum signal when the beam crosses the tracks and $(I_1 + I_2)_a$ is the reference signal..

Over the whole disk this ratio shall not vary by more than 3 dB.

21.2 Cross-track minimum signal ratio

The cross-track minimum signal shall meet the following requirements:

a) in areas containing embossed Headers and embossed Recording fields:

$$(I_1 + I_2)_{OG} / (I_1 + I_2)_a \geq 0{,}15$$

b) in grooved areas in the Formatted Zone without embossed Recording Fields:

$$(I_1 + I_2)_{OG}) / (I_1 + I_2)_a \geq 0{,}25$$

21.3 Push-pull ratio

The push-pull signal is the sinusoidal difference signal $(I_1 - I_2)$ in the tracking Channel, when the focus of the optical beam crosses the tracks. The signal can be used by the drive for radial tracking. The peak-to-peak value of the push-pull signal shall meet the following requirements

a) in grooved areas with embossed data in the Formatted Zone:

Parallel Polarization

$$0{,}15 \leq (|I_1 - I_2|) / (I_1 + I_2)_a \leq 0{,}65$$

Copyright International Organization for Standardization
Provided by IHS under license with ISO
No reproduction or networking permitted without license from IHS
Not for Resale

Perpendicular polarization

$$0,10 \leq (|I_1 - I_2|) / (I_1 + I_2)_a \leq 0,60$$

b) in grooved areas in the Formatted Zone without embossed Recording fields:

Parallel polarization

$$0,40 \leq (|I_1 - I_2|) / (I_1 + I_2)_a \leq 0,65$$

Perpendicular polarization

$$0,25 \leq (|I_1 - I_2|) / (I_1 + I_2)_a \leq 0,60$$

where $(|I_1 - I_2|)$ is the peak-to-peak amplitude of the differential output of the two halves of the split photodiode detector in the Tracking Channel.

21.4 Divided push-pull signal

The first term of the divided push-pull signal is the peak-to-peak amplitude derived from the instantaneous level of the differential output $(I_1 - I_2)$ from the split photodiode detector when the light beam crosses the unrecorded or pre-formatted data area of grooved tracks divided by the instantaneous level of the sum output $(I_1 + I_2)$ from the split photodiode detector when the light beam crosses these areas.

The second term of the divided push-pull signal is the ratio of the minimum peak-to-peak amplitude derived from the instantaneous level of the differential output $(I_1 - I_2)$ divided by the instantaneous level of the sum output $(I_1 + I_2)$ from the split photodiode detector when the light beam crosses the pre-formatted data area of grooved tracks to maximum peak-to-peak amplitude derived from the instantaneous level of the differential output $(I_1 - I_2)$ divided by the instantaneous level of the sum output $(I_1 + I_2)$ from the split photodiode detector when the light beam crosses the pre-formatted data area of grooved tracks.

The split photodiode detector separator shall be parallel to the projected track axis. In this measurement, the I_1 and I_2 signals shall be provided by the split photodiode detector. The tracking servo shall be operating in open-loop mode during this measurement.

The first term shall meet the following requirements:

Parallel polarization

$$0,65 \leq [(I_1 - I_2)/(I_1 + I_2)]_{pp} \leq 1,05$$

Perpendicular polarization

$$0,40 \leq [(I_1 - I_2)/(I_1 + I_2)]_{pp} \leq 0,90$$

The second term shall satisfy

$$[(I_1 - I_2)/(I_1 + I_2)]_{ppmin}/[(I_1 - I_2)/(I_1 + I_2)]_{ppmax} \geq 0,70$$

21.5 On-track signal ratio

The on-track signal is the signal in Channel 1 when tracking in a grooved area without embossed data. The on-track signal I_{ot} shall meet the following requirements:

$$0,070 \leq \frac{I_{ot}}{I_0} \leq 1,00$$

$$0,12 \leq R_m \frac{I_{ot}}{I_0} \leq 0,26 \text{ (for R/W, P-ROM, WO)}$$

$$0,42 \leq R_m \frac{I_{ot}}{I_0} \leq 0,81 \text{ (for O-ROM)}$$

At any point in the Formatted Zone, except in the Lead-out Zone, the variation of I_{ot} shall meet the following requirements:

Copyright International Organization for Standardization
Provided by IHS under license with ISO
No reproduction or networking permitted without license from IHS Not for Resale

$$(I_{ot\ max} - I_{ot\ min}) / (I_{ot\ max} + I_{ot\ min}) \leq 0,15$$

where $I_{ot\ max}$ is the maximum value of I_{ot}. $I_{ot\ min}$ is the minimum value of I_{ot}.

21.6 Phase depth

The phase depth of the grooves equals

$$\frac{n \times d}{\lambda} \times 360°$$

where:

n is the index of refraction of the substrate

d is the groove depth

λ is the wavelength

The phase depth shall be less than 180°.

21.7 Track location

The tracks are located at those places on the disk where $(I_1 - I_2)$ equals zero and $(I_1 + I_2)$ has its maximum value.

22 Signals from Headers

The signal obtained from the embossed Headers shall be measured in Channel 1 of the Reference Drive.

The signal from an embossed mark in the recording layer is defined as the peak-to-peak value of the modulation of the signal in Channel 1 caused by the mark when the beam follows a recorded track.

The level of all signals from embossed marks shall be less than I_{OL}.

22.1 Sector Mark Signals

The signal I sm from the Sector Mark shall meet the requirement

$$I_{sm} / I_0 \geq 0,40$$

22.2 VFO signals

The signals from the VFO_1 and VFO_2 fields shall meet the requirement

$$1,00 \geq I_{vfo} / I_0 \geq 0,20$$

where I_{vfo} is the peak-to-peak amplitude of the read signal from the VFO area.

In addition, the condition

$$| I_{vfo} / I_{pmax} | \geq 0,30$$

shall be satisfied within each sector, where I_p is the signal in that sector from pre-recorded marks and I_{vfo} is the peak-to-peak amplitude of the read signal from the VFO area.

22.3 Address Mark, ID and PA signals

The signals from these fields shall meet the requirements

$$1,00 > I_p / I_0 > 0,20$$

$$I_{pmin} / I_{pmax} \geq 0,30$$

Copyright International Organization for Standardization
Provided by IHS under license with ISO
No reproduction or networking permitted without license from IHS
Not for Resale

22.4 Timing jitter

The header signal shall be read and detected using the read Channel circuit defined in annex H under the conditions specified in 20.2.2. The timing jitter Jt(H) and the edge shift St(H) shall be measured according to the procedure in annex J shall meet the following requirements:

$Jt(H) < 0{,}075\ T$

$St(H) < 0{,}10\ T$

where T is the Channel clock period, Jt(H) is the standard deviation (sigma) of the difference between the length of mark or space and the mean value of each n T mark or n T space, and St(H) is the difference between the mean value of the measured lengths and the ideal length of each mark or space. The ideal length corresponds to n Channel bit times T. Jt and St are illustrated in figure J.1.

All the time interval samples detected from the Header signals on the recording layer shall satisfy the condition of both Jt(H) and St(H).

23 Signals from embossed Recording fields

23.1 Signal amplitude

If the disk has an Embossed Zone, the Recording fields of all sectors in this zone shall contain embossed marks. The signals from these marks shall be measured in Channel 1 (see 9.1). Acceptable defects of the marks are specified in section 6. The signal from all embossed Recording fields is defined as the peak-to-peak value of the modulation of the signal.

The signal I_p from marks in the Recording fields of the Embossed Zone shall meet the following requirements:

$1{,}00 > I_p / I_0 > 0{,}20$

$I_{pmin} / I_{pmax} \geq 0{,}30$

The last requirement applies over Recording fields. I_{pmin} and I_{pmax} are the signals with minimum and maximum amplitude in the Recording field of a sector.

23.2 Modulation method offset

Procedure

Read and detect the data signal with no equalization under the conditions given in 20.2.2. The threshold fractional value may be varied in this test to compensate for edge motion of the marks due to parameter variations.

Measure the detected signal in two ways using a time interval analyzer:

1) the mean leading-to-trailing edge (mark) lengths; and
2) the mean trailing-to-leading edge (space) lengths.

The measurement shall be made using 10^5 independent time interval samples on several tracks at each testing location. The offset for any desired run of length n is the absolute value of the difference of the detected signal length L_n minus n times T. Adjust the threshold level once for both measurements to minimize the worst case offset for this radial position and express it as a percentage of the Channel bit time T. The modulation method offset O_{mod} is the maximum percentage offset over all n and over all radial positions R.

$$O_{mod} = 100 \max_{n,R} \left(\frac{L_n - nT}{T} \right) \text{percent}$$

The modulation method offset O_{mod} shall be less than 10% of the time period T of one Channel bit.

Copyright International Organization for Standardization
Provided by IHS under license with ISO
No reproduction or networking permitted without license from IHS Not for Resale

23.3 Timing Jitter

The embossed data signal shall be read and detected using the read Channel circuit defined in annex H under the conditions specified in 20.2.2. The timing jitter Jt_d and the edge shift St_D shall be measured according to the procedure in annex J and shall meet the following requirements:

$$Jt_d < 0{,}075T$$
$$St_d < 0{,}10T$$

where T is the Channel clock period, Jt(D) is the standard deviation (sigma) of the difference between the measured length of mark or space and the mean value of each nT mark or nT space, and St(D) is the difference between the mean value of the measured lengths and the ideal length of each mark or space. The ideal length corresponds to n Channel bit times T. Jt and St are illustrated in annex J, figure J.1.

All the time interval samples detected from the embossed data signals on the recording layer shall satisfy the former conditions of both Jt_d and St_d.

24 Signals from Control Track PEP marks

The density of tracks and the shape of marks in the PEP Zone shall be such that the cross-track loss meets the requirement

$$\frac{I_{m\,max}}{I_{m\,min}} < 2{,}0$$

The signal I is obtained from Channel 1 (see 9.1). The signal I_m is the maximum amplitude in a group of three successive marks. $I_{m\,max}$ is the maximum value and $I_{m\,min}$ is the minimum value of I_m obtained over one physical track. $I_{m\,max}$ shall be greater than 0,4 I_0, where I_0 is the signal obtained from Channel 1 in an unrecorded ungrooved area. The effect of defects shall be ignored.

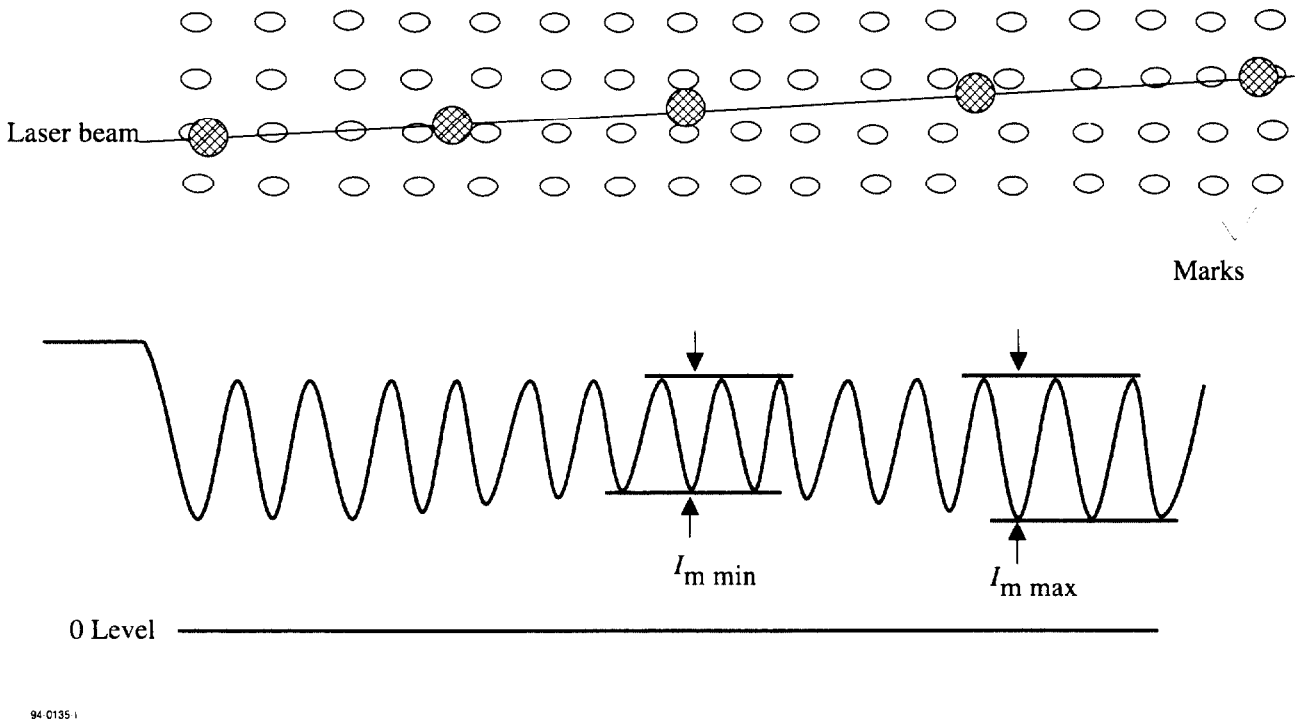

Figure 25 - Path of the laser beam when crossing tracks and the resulting PEP signals

Copyright International Organization for Standardization
Provided by IHS under license with ISO
No reproduction or networking permitted without license from IHS
Not for Resale

Section 5 : Characteristics of the recording layer

25 Method of testing

Clauses 26 to 28 describe a series of tests to assess the magneto-optical properties of the Recording layer, as used for writing and erasing data. The tests shall be performed only in the Recording field of the sectors in the Rewritable Zone. If there is no Rewritable Zone for user recording, clauses 27 to 29 shall not apply. The write, read and erase operations necessary for the tests shall be made on the same Reference Drive.

Clauses 26 to 28 specify only the average quality of the recording layer. Local deviations from the specified values, called defects, can cause write or erase problems. These defects are covered in section 6.

25.1 Environment

All signals in clauses 26 to 28 shall be within their specified ranges with the cartridge in any environment in the range of allowed operating environments defined in 8.1.2

25.2 Reference Drive

The write and erase tests described in clauses 26 to 28 shall be measured in Channel 2 of the Reference Drive. The drive shall have the following characteristics for the purpose of these tests.

25.2.1 Optics and mechanics

The focused optical beam shall have the properties defined in 9.2 a) to f). The disk shall rotate as specified in 9.5.

25.2.2 Read power

The optical power incident on the entrance surface of the disk and used for reading the information shall be in the range specified in 20.2.2.

25.2.3 Read Channel

The Reference Drive shall have a Read Channel which can detect magneto-optical marks in the recording layer. This Channel shall have an implementation equivalent to that given by Channel 2 in 9.3

The edge positions in time shall be measured for testing purposes by a threshold detection method. The threshold value is referenced to the centre of the peak-to-peak envelope of the readback signal. The positive peak and negative peak signals of the envelope circuit shall each contain a single pole filter with a -3 dB roll-off point at 50 kHz. To be valid, the threshold value shall be in a band of 50 % of the peak-to-peak envelope signal zero, and is referenced to the middle of this envelope.

Nominally the threshold value shall be zero if the laser power calibration is perfect and there are no parameter variations. However, in some measurements the threshold value may have to be adjusted to minimize the effects of mark size changes due to parameter variations during writing.

25.2.4 Tracking

During the measurement of the signals, the focus of the optical beam shall follow the tracks as specified in 20.2.4.

25.2.5 Signal detection for testing purposes

The signal from the Read Channel is not equalized before detection. The signal shall be rolled off with a 3-pole Butterworth filter with a cut-off frequency of half the Channel clock frequency. All read testing is performed at 3 000 rpm.

The edge positions in time shall be measured for testing purposes by a threshold detection method. The threshold value is referenced to the centre of the peak-to-peak envelope of the readback signal. The positive peak and negative peak signals of the envelope circuit shall each contain a single pole filter with a -3 dB roll-off point at 50 kHz. To be valid, the threshold value shall be in a band of 50 % of the peak-to-peak envelope signal zero, and is referenced to the middle of this envelope.

Nominally the threshold value shall be zero if the laser power calibration is perfect and there are no parameter variations. However, in some measurements the threshold value may have to be adjusted to minimize the effects of mark size changes due to parameter variations during writing.

--`,,```,,,,````-`-`,,`,,`,`,,`---
Copyright International Organization for Standardization
Provided by IHS under license with ISO
No reproduction or networking permitted without license from IHS Not for Resale

25.3 Write conditions

25.3.1 Write pulse and power

Marks are recorded on the disk by pulses of optical power superimposed onto a specified bias power of 1,5 mW ± 10% (see annex K) at a disk speed of 3 000 rpm.

The pulse shape for the purpose of testing is given in annex K.

The write power is the power incident at the entrance surface, used when recording in the user zone.

Testing shall be carried out with 2T or 4T marks having pulse durations of 1,5 T and 3,5 T respectively, where T is the nominal clock period for the zone corresponding to the test radius.

The write power for both the 2T and 4T marks at radii of 30, 45, and 60 mm are given in the SFP Zone (see 17.4.2) and are measured by the method described in 25.3.3.

For radii other than 30 mm, 45 mm or 60 mm the values shall be linearly interpolated from the above.

For all test cases the actual power used shall be within 5% of those values contained in the SFP zone of the disk or of the result of the interpolation between the values given above.

For all test cases the actual pulse width used shall be within 5% of those values given above.

25.3.2 Write magnetic field and temperature

The requirement for all tests shall be met over the operating environment except where otherwise noted.

The requirements of all tests shall be met for all magnetic field intensities, at the recording layer during recording, in the range from 18 000 A/m to 32 000 A/m except where otherwise noted.

The write magnetic fields for all tests, pointing in the north to south direction, shall be within 15¡ from the normal to the Disk Reference Plane P, in the direction of the incident beam, i.e. from the entrance surface to the recording layer.

25.3.3 2T and 4T pulse power determination

The following procedure shall be used by the media manufacturer to measure values for the 2 T and 4 T pulse power levels that are recorded in the SFP zone.

Erase the tracks and write the following test pattern as a group many times on several tracks at 30, 45, and 60 mm radii using write pulse widths of 1,5 T, 3,5 T, and 7,5 T for the 2T, 4T, and 8T marks respectively.

2T 2T 2T 2T 2T 2T 2T 2T 2T 8T 4T 8T 8T 8T

M S M S M S M S M S M S M S

where M and S stand for mark and space respectively.

The 8T pulse power shall be the same as the 4T pulse power. The recording shall be done at a media temperature of 25 °C ± 1 °C, a magnetic field intensity at the recording layer of 25 000 A/m ± 5%, and a disk speed of 3 000 rpm.

Read and detect the readback signal with the detection method given in 25.2.5. The threshold value shall be 0. Adjust the 4T pulse power so that the readback signal for the 4T mark is exactly 4 Channel bit times T long. Adjust the 2T pulse power so that the DC value of the 2T readback signal is exactly half way between the minimum and maximum signal amplitudes, namely the threshold reference level. Record the 2T and 4T pulse powers.

25.3.4 Media power sensitivity

The pulse power P_p is the upper bound of the power required to form 2T marks as a function of pulse duration T_p. P_p is given by the reciprocity relationship

$$P_p = C\left(\frac{1}{T_p} + \frac{1}{\sqrt{T_p}}\right) \text{mW}$$

where 10 ns < T_p < 60 ns, otherwise

Copyright International Organization for Standardization
Provided by IHS under license with ISO
No reproduction or networking permitted without license from IHS
Not for Resale

P_p = 8 mW.

The data from the procedure in 25.3.3 shall be used by the media manufacturer to calculate the quantity *C*. *C* must be less than 55.

$$C = P_p \times \frac{T_p \sqrt{T_p}}{T_p + \sqrt{T_p}} < 55$$

where P_p is the 2T pulse power measured in 25.3.3 and T_p is the 2T pulse duration of 1,5 T.

25.4 Erase conditions

Marks are erased from the disk by a constant optical power in the presence of a magnetic field.

25.4.1 Erase power

The erase power is the continuous optical power required for any given track at the entrance surface to erase marks written according to 25.3 to a specified level (see clause 28).

The continuous erase power level is recorded in the SFP zone for 30 mm, 45 mm, and 60 mm radii at 3 000 rpm (see 17.4.2). For radii other than 30 mm, 45 mm, and 60 mm the values shall be linearly interpolated from the above.

The actual erase power shall be equal to the interpolated values ± 5 % .

The continuous erase power shall never exceed 10 mW.

25.4.2 Erase magnetic field

The requirements of all tests shall be met for all magnetic field intensities at the recording layer during erasing in the range from 18 000 A/m to 32 000 A/m.

The erase magnetic field, pointing in the North to South direction, shall be within 15° from the normal to the Disk Reference Plane P, in the direction of the reflected beam, i.e. from the recording layer to the entrance surface.

25.5 Definition of signals

The signals in Channel 2 are linearly related to the difference between the currents through the photodiode detectors K_1 and K_2, and are therefore linearly related to the optical power falling on the detectors (see 9.1).

26 Magneto-optical characteristics

26.1 Figure of merit for magneto-optical signal

The figure of merit *F* is expressed as the product of *R*, sin q and cos 2β, where *R* is the reflectance expressed as a decimal fraction, q is the Kerr rotation and β is the ellipticity of the reflected beam. The polarity of the figure of merit is defined to be negative for a written mark in an Fe-rich Fe-Tb alloy layer and with the write magnetic field in the direction specified in 25.3.2. In this case the direction of Kerr rotation is counterclockwise as viewed from the source of the beam.

The polarity and the value of the figure of merit shall be specified in bytes 364 and 365 of the SFP Zone (see 17.4.2). This nominal value shall be:

0,001 75 < | *F* | < 0,005 0

The measurement of the actual value F_m shall be made according to annex L. This actual value F_m shall be within 12% of the nominal value.

26.2 Imbalance of magneto-optical signal

The imbalance of the magneto-optical signal is the ratio of the amplitude of the signal in Channel 2 over the amplitude of the signal in Channel 1 measured in the Data field of a sector. The effect of Kerr rotation shall be eliminated, e.g. by alternating the magnetized direction of the recording layer. The phase retarder in the optical system shall be in the neutral position (see 9.1). Imbalance can be caused by birefringence of the disk.

Copyright International Organization for Standardization
Provided by IHS under license with ISO
No reproduction or networking permitted without license from IHS Not for Resale

The imbalance shall not exceed 0,06 in the User Zone, throughout the environmental operating range and in a bandwidth from d.c. to 50 kHz.

27 Write characteristics

If there is no Rewritable Zone for user recording, clauses 27 to 29 shall not apply.

27.1 Resolution

I_L is the peak-to-peak value of the signal obtained in Channel 2 (see 9.2) from 8 T marks and 8T spaces written under any of the conditions given in 25.3, the longest interval allowed by the RLL(1,7) code for each zone, and read under the conditions specified in 20.2.2 c).

I_H is the peak-to-peak value of the signal obtained in Channel 2 from 2T marks and 2T spaces written under the conditions given in 25.3, the lowest interval allowed by the RLL(1,7) code for each zone ± 0,1 MHz, and read under the condition specified in 20.2.2 c).

The resolution I_H/I_L (see figure 26) shall not be less than 0,30 within any sector. It shall not vary by more than 0,20 over a track.

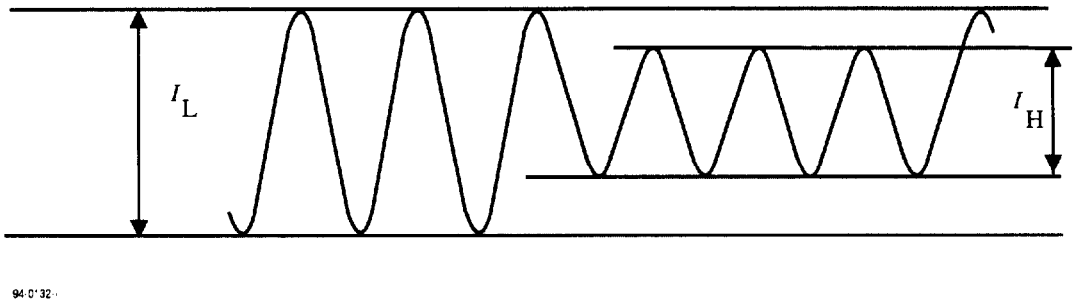

94-01-32

Figure 26 - Definition of I_L and I_H

27.2 Narrow-band signal-to-noise ratio

The narrow-band signal-to-noise ratio is the ratio of the signal level to the noise level of a specified pattern, measured in a 30 kHz bandwidth. It shall be determined as follows.

Write a series of 2T marks followed by 2T spaces in the Recording field of a series of sectors at a frequency f_0 of the highest frequency allowed by the RLL(1,7) code for each zone ± 0,1 MHz. The write conditions shall be as specified in 25.3.1.

Read the Recording fields in Channel 2 with the Read Channel specified in annex H under the conditions specified in 25.2 using a spectrum analyzer with a bandwidth of 30 kHz. Measure the amplitudes of the signal and the noise at the frequency f_0 as indicated in figure 27. The measurements shall be corrected for the effect of the Header fields and for any instrumentation error in order to obtain the value for the Recording field only.

The narrow- band signal-to-noise ratio is

$$20 \log_{10} \frac{\text{signal level}}{\text{noise level}}$$

The narrow band signal-to-noise ratio shall be greater than 45 dB for all tracks in any sector in the Rewritable Zone for all allowed values of the write magnetic field and for all phase differences between -15° and +15° in the optical system as defined in 9.1.

NOTE 6 - It is permitted to use a spectrum analyzer with a bandwidth of 3 kHz and to convert the measured value to that for a 30 kHz value.

Copyright International Organization for Standardization
Provided by IHS under license with ISO
No reproduction or networking permitted without license from IHS
Not for Resale

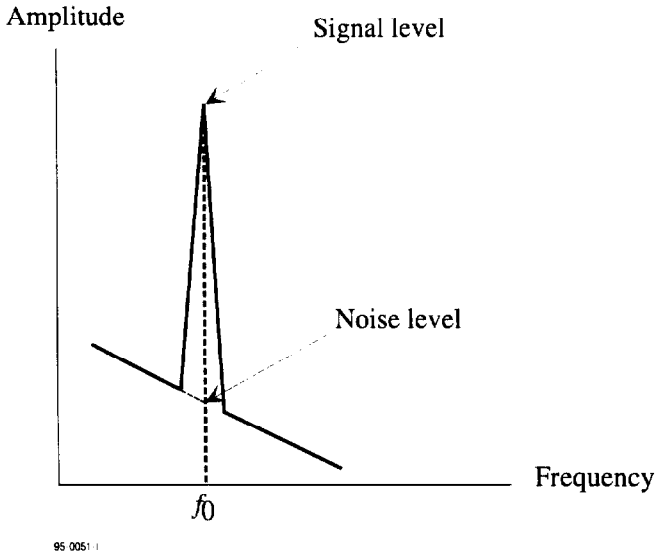

Figure 27 - Amplitude versus frequency for the magneto-optical signal

27.3 Cross-talk ratio

The cross-talk ratio definition and measurement procedure describe the entities to be measured in terms of physical tracks. These physical tracks can consist of one or more logical tracks (see 13). The number of logical tracks involved in the measurement must be adjusted for the Band in which the measurement is made.

27.3.1 Rewritable track test method

For rewritable tracks the test on cross-talk shall be carried out on any group of five adjacent unrecorded physical tracks, designated (n-2), (n-1), n, (n+1), (n+2), in the Rewritable Zone. Erase the recording field of each of the sectors in these tracks.

Write a series of 2T marks followed by 2T spaces at a frequency f1 for each zone ± 0,1 MHz in the Recording field of the sectors in track n. The write conditions shall be as specified in 25.3.

Read the Recording fields of the sectors in the tracks (n-1) n and (n+1) under the conditions specified in 25.2.2 and 25.2.3.

The cross-talk from a track n to track (n-1) and to track (n+1) shall be lower than -23 dB.

27.3.2 Embossed track test method

For embossed tracks, the following test shall be carried out on the tracks indicated below for 1 024-byte sector and 512-byte sector.

Table 17 - Correspondence between logical track and physical track

1 024-byte sector		512-byte sector	
Logical track/sector	**Physical track**	**Logical track/sector**	**Physical track**
-417/9 to -414/16	-120	-424/19 to -421/30	-125
-413/0 to -410/7	-119	-420/0 to -417/11	-124
-410/8 to -407/15	-118	-417/12 to -414/23	-123
59 036/8 to 59 038/3	22 608	56 480/22 to 56 482/10	22 597
59 038/4 to 59 039/16	22 609	56 482/11 to 56 483/30	22 598
59 040/0 to 59 041/12	22 610	56 484/0 to 56 485/19	22 599

A similar choice of tracks could be taken from the User Zone of a Type P-ROM disk.

Copyright International Organization for Standardization
Provided by IHS under license with ISO
No reproduction or networking permitted without license from IHS
Not for Resale

For 512-byte sectors:

a) Erase physical tracks -124, -123, 22 597, and 22 598;

b) Read physical tracks -125 and -124, 22 598 and 22 599 using Channel 1 under the conditions specified in 20.2.2;

Sector Marks from adjacent tracks shall be degated during this test.

The cross-talk ratio from physical track -125 to -124 and from physical track 22 599 to 22 598 shall be less than -23 dB in each case.

For 1024-byte sectors:

a) Erase physical tracks -119, -118, 22 608, and 22 609;

b) Read physical tracks -120, -119, 22 609 and 22 610 using Channel 1 under the conditions specified in 20.2.2.

Sector Marks from adjacent tracks shall be degated during this test.

The cross-talk ratio from physical track -120 to -119 and from physical track 22 610 to 22 609 shall be less than -23 dB in each case.

27.4 Timing Jitter

The following procedure shall be used to determine timing jitter.

Erase the tracks and write a 4T mark and a 4T space tone on several tracks at 30 mm, 45 mm, and 60 mm radii under the conditions given in 25.3.1 and 25.4.1 using the erase and 4T pulse power levels as defined in the SFP zone.

Read and detect the data signal with the detection method given in 25.2.5. Adjust the threshold value so that the readback signal for the 4 T mark is exactly 4 Channel bit times T long. To be valid, the threshold value shall be in a band of 50 % of the peak-to-peak envelope signal zero, and is referenced to the middle of this envelope.

Measure the length in time of the leading-to-trailing edge of the detected data from the 4T mark with a time interval analyzer. The timing jitter is the standard deviation (one sigma) of the measured time interval *L4*. The measurements shall be made using 10^5 independent time interval samples on several tracks at each radial location.

The value of timing jitter (due to the media) shall be less than 7,5 % of the time period T of one Channel bit.

27.5 Media thermal build-up during mark formation

The media thermal build-up test uses a special pattern to measure the additional mark length in a 8T mark caused by the preheating of the first half of the mark which is equivalent to a 4T mark.

The following procedure shall be used to determine the media thermal build-up during mark formation.

Erase the tracks and write the following test pattern as a group many times on several tracks at the 30 mm, 45 mm and 60 mm radii using the write conditions of 25.3.1 and 25.4.1 and the 4T pulse powers given in the SFP zone.

2T	2T	2T	2T	2T	2T	2T	2T	2T	8T	4T	8T	8T	8T
M	S	M	S	M	S	M	S	M	S	M	S	M	S

where M and S stand for mark and space respectively.

The 8T mark pulse power shall be the same as that for the 4T mark. The 8T pulse duration shall be equal to the 4T pulse duration plus 4T.

Read and detect the data signal with the detection method given in 25.2.5. Adjust the threshold value so that the readback signal for the 4T mark is exactly 4 Channel bit times T long. To be valid, the threshold value shall be in a band of 50 % of the peak-to-peak envelope signal zero, and is referenced to the middle of this envelope.

Measure the thermal build up offset O_{th}, which is the value of the difference between the mean detected 8T signal L8 minus the mean detected 4T signal L4 and minus 4 times T, using a time interval analyzer. The measurements shall be made using 10^5 independent time interval samples on several tracks at each radial location.

Copyright International Organization for Standardization
Provided by IHS under license with ISO
No reproduction or networking permitted without license from IHS
Not for Resale

$$O_{th} = 100 \frac{|L8 - L4 - 4T|}{T} \%$$

The absolute value of the thermal buildup offset O_{th} shall be less than 20 % of the time period T of one Channel bit.

28 Erase power determination

This procedure shall be used by the media manufacturer to determine the erase powers that are recorded in the SFP zone. The erase power is the continuous power level for the given radius and rpm that is sufficient to erase the current track without erasing the adjacent track.

The conditions for the erase power measurement are that the media temperature is 25 °C ± 1 °C, the magnetic field intensities at the recording layer has a value of 25 000 A/m ± 1 250 A/m at the test rpm.

Erase four adjacent tracks *n*, *n*+1, *n*+2, and *n*+3 in the User Zone with a relatively high erase power. Write a 2T tone on track *n*+1 and a 4T tone on track *n*+2 under the conditions given in 25.3.1. Erase track *n*+1 with the erase power to be tested. Measure the signal amplitude on both tracks *n*+1 and *n*+2 with a spectrum analyzer.

Perform this test sequence with an initial low erase test power and increase the erase test power by 0,5 mW each time the test is repeated. Plot the track *n*+1 and track *n*+2 signal amplitudes as a function of the erase test power. Choose the erase power to be half way between the erase power where the track *n*+2 signal amplitude drops by 3 dB and the power where the track *n*+1 signal amplitude first reaches the media limited noise floor.

Copyright International Organization for Standardization
Provided by IHS under license with ISO
No reproduction or networking permitted without license from IHS Not for Resale

Section 6 : Characteristics of user data

29 Method of testing

Clauses 30 and 31 describe a series of measurements to test conformance of the user data on the disk with this International Standard. It checks the legibility of both embossed and user-written data. The data is assumed to be arbitrary. The user-written data may have been written by any drive in any environment. The read tests shall be performed on the Reference Drive.

Whereas clauses 20 to 28 disregard defects, clauses 30 and 31 include them as unavoidable deterioration of the read signals. The gravity of a defect is determined by the correctability of the ensuing errors by the Error Detection and Correction circuit in the read Channel defined below. The requirements in clauses 30 and 31 define a minimum quality of the data, necessary for data interchange.

29.1 Environment

All signals specified in clauses 30 and 31 shall be within their specified ranges with the cartridge in any environment in the range of allowed operating environments defined in 8.1.2. It is recommended that before testing the entrance surface of the optical disk shall be cleaned according to the instructions of the manufacturer of the disk.

29.2 Reference Drive

All signals specified in clauses 30 and 31 shall be measured in the indicated channels of the Reference Drive. The drive shall have the following characteristics for the purpose of these tests:

29.2.1 Optics and mechanics

The focused optical beam shall have the properties specified in 9.2 a) to f). The disk shall rotate as specified in 9.5

29.2.2 Read power

The optical power incident on the entrance surface of the disk (used for reading the information) shall be in the range specified in 20.2.2.

29.2.3 Read amplifiers

The read amplifiers after the photodiode detectors in Channels 1 and 2 shall be as specified in 9.3.

29.2.4 Mark Quality

The signals from both read amplifiers shall be converted from analogue to binary with an edge detector as defined in annex H. The output signals from Channels 1 and 2 shall be filtered without equalization with the specified low-pass filter, and compared with their threshold levels of the comparator which shall be between 0,25 and 0,75 for the threshold fractional values. The threshold levels shall be adjusted to minimize the maximum offset (or bias) of the marking and spacing intervals from their desired (or true) values of 2T, 3T .... 7T, 8T. The output signals from the comparator are converted to binary signals with the edge detector.

Marking intervals and spacing intervals are equal to leading-to-trailing edge intervals and trailing-to-leading intervals respectively.

The modulation method offset O_{mod} in this section means the minimized maximum offset of the marking and spacing intervals measured with the output signals from the edge detectors, and it shall be expressed as a percentage of the Channel bit time T. Measurement procedure shall be as follows:

a) Measure using a time interval analyzer mean values of all marking and spacing intervals separately from the user data, and observe the maximum offset of the separately measured mean values of the intervals corresponding to 2T, 3T, ..., 7T, 8T.

b) Adjust the threshold level of the comparator in order to minimize the maximum offset observed in a). Finally, the observed maximum offset is the modulation method offset O_{mod} of the objective user data.

The timing jitter in this section is defined as the standard deviation of the separately measured 2T, 3T, ..., 7T, 8T marking and spacing intervals excluding outlying observations by defects, using a time interval analyzer with the output signals from the edge detector of the markings and spacings in a sector excluding the modulation method offset. Therefore, independent

Copyright International Organization for Standardization
Provided by IHS under license with ISO
No reproduction or networking permitted without license from IHS
Not for Resale

interval samples for this measurement are limited by the number of markings and spacings in a sector. The timing jitters shall be expressed as a percentage of Channel time T.

The converter for Channel 1 shall operate correctly for analogue signals from embossed marks with amplitudes as determined by clauses 22 and 23.

The converter for Channel 2 shall operate correctly for analogue signals from user-written marks with an amplitude as determined by clauses 25 and 26.

29.2.5 Channel bit clock

The signals from the analogue-to-binary converters shall be virtually locked to the Channel bit clock/clocks which provides/provide the Channel bit windows of 0,70 T effective width for timing the leading and/or trailing edges of the binary signals. Channel bit clock/clocks shall be adjusted in order to minimize the accumulated value/values of the timing errors of the leading to leading, leading to trailing, trailing to leading, and trailing to trailing edges from the Channel bit clock/clocks.

29.2.6 Binary-to-digital converters

The binary signals shall be correctly converted to the data bytes with the binary-to-digital converters based on the sector format and the recording code defined in clauses 15 and 16.

29.2.7 Error correction

Correction of errors in the data bytes shall be carried out by an error detection and correction system based on the definition in F.2 and F.3 of annex F. There shall be an additional correction system for the embossed data, based on the parity sectors as defined in 18.7.3

29.2.8 Tracking

During measurement of the signals, the focus of the optical beam shall follow the tracks as specified in 20.2.4.

30 Minimum quality of a sector

This clause specifies the minimum quality of the Header and Recording field of a sector as required for interchange of the data contained in that sector. The quality shall be measured on the Reference Drive specified in 29.2.

A byte error occurs when one or more bits in a byte have a wrong setting, as detected by ECC and/or CRC circuits.

30.1 Headers

30.1.1 Sector Mark

At least three of the five long marks of the Sector Mark shall have the timing specified in 15.2 and the signals shall have the amplitude specified in 22.1.

30.1.2 D fields

At least one of the two ID fields in a Header read in Channel 1 shall not have any byte errors, as checked by the CRC in the field.

30.2 User-written data

30.2.1 Byte errors

The user-written data in a sector as read in Channel 2 shall not contain any byte errors that cannot be corrected by the error correction defined in 29.2.7.

30.2.2 Modulation method offset

The user-written marks in a sector as read in Channel 2 shall have a modulation method offset O_{mod} less that 10 % of the time period T of one Channel bit.

Copyright International Organization for Standardization
Provided by IHS under license with ISO
No reproduction or networking permitted without license from IHS Not for Resale

30.2.3 Timing jitter

The user-written marks in a sector as read in Channel 2 shall have timing jitters due to the media less than 7,5% of the time period T of one Channel bit.

30.3 Embossed data

30.3.1 Byte errors

The embossed data in a sector as read in Channel 1 shall not contain any byte errors that cannot be corrected by the error correction defined in 29.2.7

30.3.2 Modulation method offset

The embossed marks in a sector as read in Channel 2 shall have a modulation method offset O_{mod} less than 10 % of the time period T of one Channel bit as specified in 23.2.

30.3.3 Timing jitter

The embossed marks in a sector as read in Channel 2 shall have timing jitters due to the media less than 7,5 % of the time period T of one Channel bit as specified in 23.3.

31 Data interchange requirements

A disk offered for interchange of data shall comply with the following requirements. See also annex N.

31.1 Tracking

The focus of the optical beam shall not jump tracks unintentionally.

31.2 User-written data

Any sector written in the Rewritable Zone that does not comply with 30.2 shall have been replaced according to the rules of the defect management as defined in clause 19.

31.3 Embossed data

Any sector in the Embossed Zone that does not comply with 30.3 shall be correctable by the error correction based on the Parity sectors as defined in 18.7.3.

31.4 Quality of disk

The quality of the disk is reflected in the number of replaced sectors in the Rewritable Zone. This Standard allows a maximum of 2 048 replaced sectors per side (see clause 19).

Copyright International Organization for Standardization
Provided by IHS under license with ISO
No reproduction or networking permitted without license from IHS
Not for Resale

Annex A

(normative)

Air cleanliness class 100 000

The classification of air cleanliness is based on a particle count with a maximum allowable number of specified minimum sized particles per unit volume, and on a statistical average particle size distribution.

A.1 Definition

The particle count shall not exceed a total of 3 500 000 particles per cubic meter of a size 0,5 µm and larger.

The statistical average size distribution is given in figure A.1 class 100 000 means that 3 500 000 particles per cubic meter of a size of ≥ 0,5 µm are allowed, but only 25 000 particles per cubic meter of a size of ≥ 5,0 µm.

It shall be recognized that single sample distribution may deviate from this curve because of local or temporary conditions. Counts below 350 000 particles per cubic meter are unreliable except when a large number of a samplings is taken.

A.2 Test method

For particles of size of the 0,5 µm to 5,0 µm, equipment employing light-scattering principles shall be used. The air in the controlled environment is sampled at a known flow rate. Particles contained in the sampled air are passed through an illuminated sensing zone in the optical chamber of the instrument. Light scattered by individual particles is received by a photo detector which converts particle size and counts the pulses such that the number of particles in relation to particle size is registered or displayed.

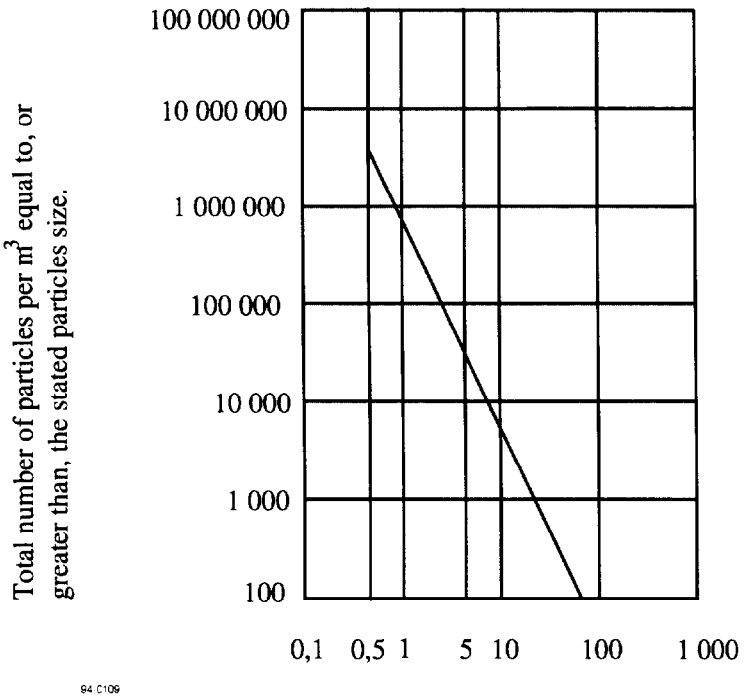

Figure A.1 - Particle size distribution curve

Copyright International Organization for Standardization
Provided by IHS under license with ISO
No reproduction or networking permitted without license from IHS
Not for Resale

Annex B

(normative)

Edge distortion test

B.1 The distortion test checks if the case is free from unacceptable distortion and protrusions along its edges. The test is made by causing the cartridge to pass through the vertical slot of a gauge while applying a specified force in addition to the gravitational pull.

B.2 The gauge shall be made of a suitable material, e.g. of chrome-plated carbon steel. The inner surfaces shall be polished to a surface finish of 5 μm peak-to-peak.

B.3 The dimensions shall be as follows (see figure B.1):

A = 155,0 mm
B = 136,0 mm ± 0,1 mm
C = 10,0 mm ± 0,1 mm
D = 11,40 mm ± 0,01 mm
E = 11,60 mm min.

B.4 When the cartridge is inserted vertically into the gauge, a vertical downward force F of 2,7 N maximum, applied to the centre of the top edge of the cartridge, shall cause the cartridge to pass through the gauge.

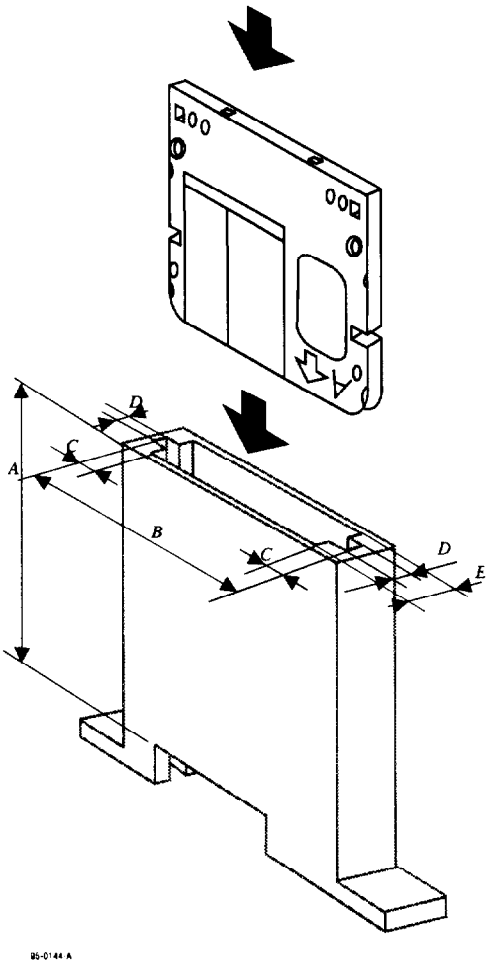

Figure B.1 - Distortion gauge

Copyright International Organization for Standardization
Provided by IHS under license with ISO
No reproduction or networking permitted without license from IHS
Not for Resale

Annex C

(normative)

Compliance test

C.1 The compliance test checks the flatness and flexibility of the case by forcing the four reference surfaces of the cartridge into a plane.

C.2 The location of the four reference surfaces S1, S2, S3 and S4 is defined in 10.5.4 and figure 5.

C.3 The test gauge consists of a base plate on which four posts P1, P2, P3 and P4 are fixed so as to correspond to the surfaces S1, S2, S3 and S4 respectively (see figure C.1). The dimensions are as follows (see figure C.2):

Posts P1 and P2

$D_a = 6{,}50 \text{ mm} \pm 0{,}01 \text{ mm}$

$D_b = 4{,}00 \text{ mm} \begin{matrix} +0{,}00 \text{ mm} \\ -0{,}02 \text{ mm} \end{matrix}$

$H_a = 1{,}0 \text{ mm} \pm 0{,}1 \text{ mm}$

$H_b = 2{,}0 \text{ mm max.}$

Posts P3 and P4

$D_c = 5{,}50 \text{ mm} \pm 0{,}01 \text{ mm}$

After assembly, the upper annular surfaces of the four posts shall lie between two horizontal planes spaced 0,01 mm apart.

C.4 The cartridge shall be placed with its reference surfaces onto the posts of the horizontal gauge. A vertical down force F of 0,4 N shall be exerted on the cartridge opposite each of the four posts.

C.5 Requirements

Under the conditions of C.4, any three of the four surfaces S1 to S4 shall be in contact with the annular surface of respective posts. Any gap between the remaining surface S and the annular surface of its post shall not exceed 0,1 mm.

Copyright International Organization for Standardization
Provided by IHS under license with ISO
No reproduction or networking permitted without license from IHS
Not for Resale

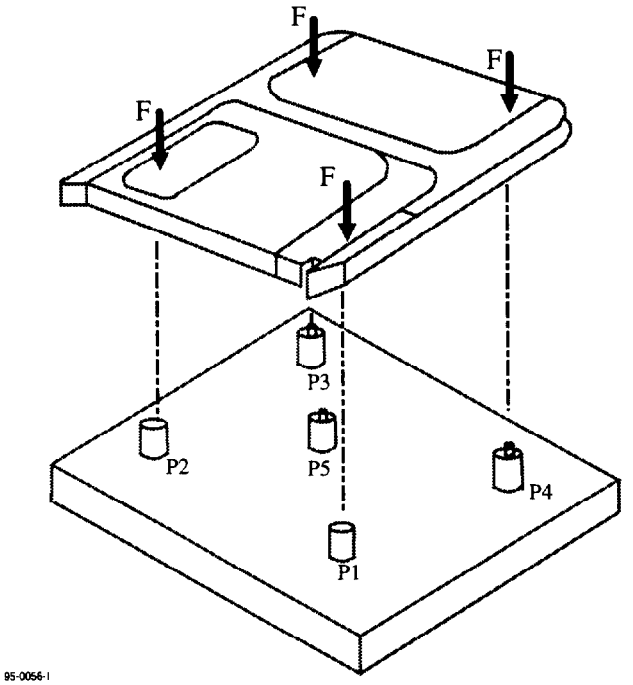

Figure C.1 - Compliance gauge

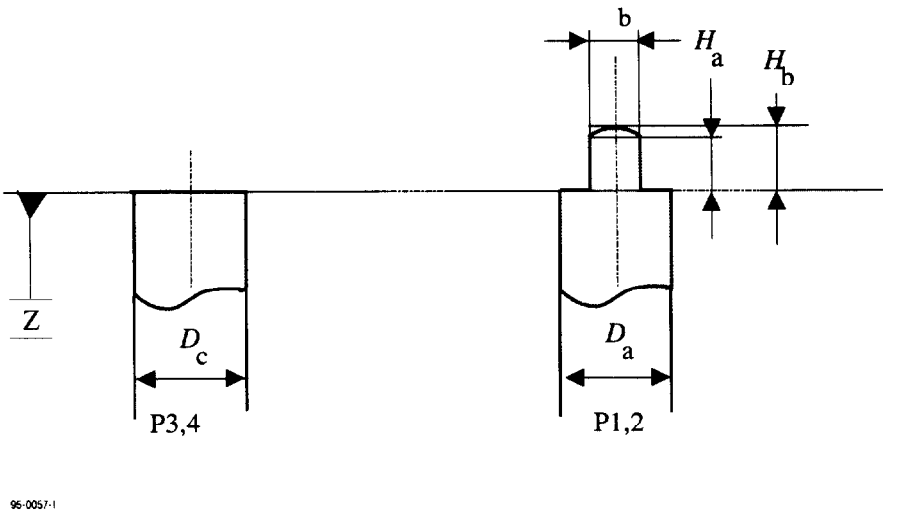

Figure C.2 - Detail of posts

Copyright International Organization for Standardization
Provided by IHS under license with ISO
No reproduction or networking permitted without license from IHS
Not for Resale

Annex D

(normative)

Test method for measuring the adsorbent force of the hub

D.1 The purpose of this test is to determine the magnetic characteristic of the magnetizable material of the hub.

D.2 Dimensions

The test device (see figure D.1) consists of a spacer, a magnet, a back yoke and a centre shaft. The dimensions of the test device are as follows :

D_d = 8,0 mm ± 0,1 mm

D_e = 20,mm ± 0,1 mm

D_f = 19,0 mm max.

D_g = 3,9 $^{+\ 0,0\ mm}_{-\ 0,1\ mm}$

H_c = 0,4mm ± 0,01 mm

H_d = 1,2 mm (typical, to be adjusted to meet the force requirement of D.4)

D.3 Material

The material of the test device shall be :

Magnet : Any magnetizable material, typically Sm-Co
Back yoke : Any suitable magnetizable material
Spacer : Non-magnetizable material or air gap
Centre shaft : Non-magnetizable material

D.4 Characteristics of the magnet with back yoke

Number of poles : 4 (typical)

Maximum energy product (BH_{max}) : 175 kJ/m^3 ± 16 kJ/m^3

The characteristics of the magnet with back yoke shall be adjusted so that with a pure nickel plate of the following dimensions (see figure D.2), and the adsorbent force of this plate at the point of H_c = 0,4 mm when spaced from the magnet surface shall be 9,5 N ± 0,6 N.

D_h = 7,0 mm ± 0,1 mm

D_j = 22,0 mm ± 0,1 mm

H_e = 2,0 mm ± 0,05 mm

D.5 Test condition for temperature

These conditions shall be as specified in 8.1.1.

Copyright International Organization for Standardization
Provided by IHS under license with ISO
No reproduction or networking permitted without license from IHS Not for Resale

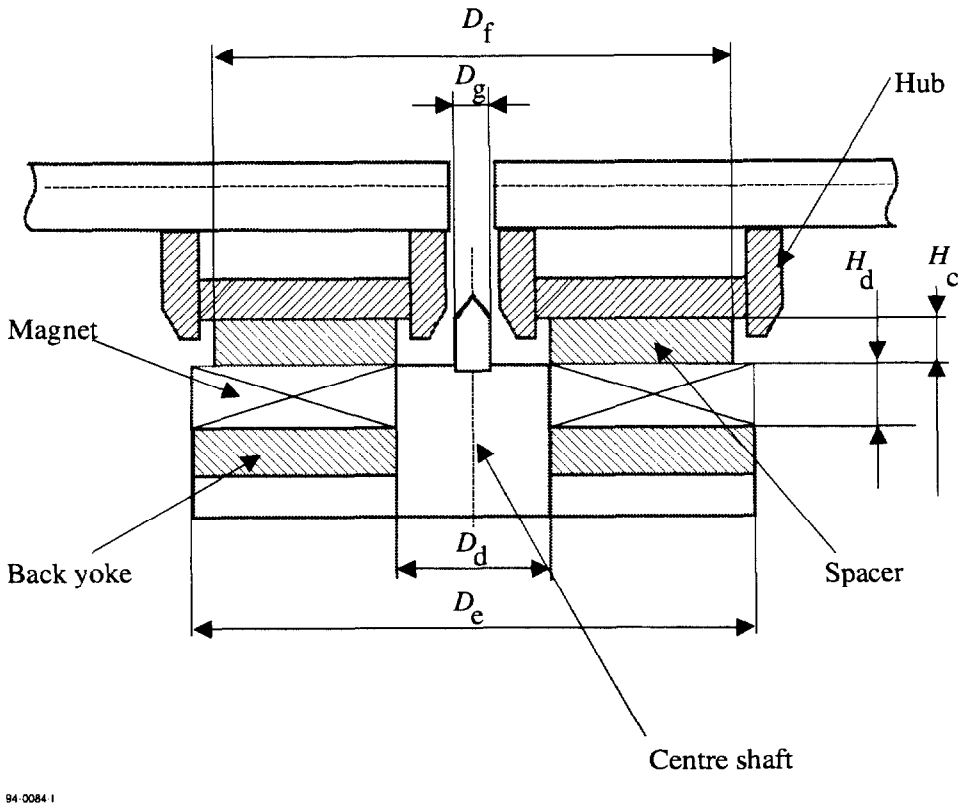

Figure D.1 - Test device for the clamping characteristic of the hub

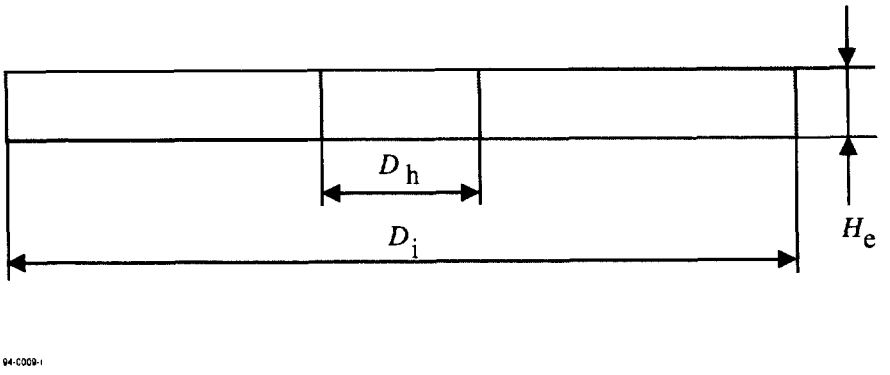

Figure D.2 - Calibration plate of the test device

Copyright International Organization for Standardization
Provided by IHS under license with ISO
No reproduction or networking permitted without license from IHS
Not for Resale

Annex E

(normative)

CRC for ID fields

The sixteen bits of the CRC shall be computed over the first three bytes of the ID field. The generator polynomial shall be

$$G(x) = x^{16} + x^{12} + x^5 + 1$$

The residual polynomial shall be

$$R_c(x) = \left(\sum_{i=8}^{i=23} \bar{a}_i x^i + \sum_{i=0}^{i=7} a_i x^i \right) x^{16} \mod G(x)$$

and a_i denotes a bit of the first three bytes and $\bar{a}_i$ an inverted bit. The highest order bit of the first byte is a_{23}.

The sixteen bits c_k of the CRC are defined by

$$R_c(x) = \sum_{k=0}^{k=15} c_k x^k$$

where c_{15} is recorded as the highest order bit of the fourth byte in the ID field.

Copyright International Organization for Standardization
Provided by IHS under license with ISO
No reproduction or networking permitted without license from IHS
Not for Resale

Annex F

(normative)

Interleave, CRC, ECC, Resync for the data field

F.1 Interleave

F.1.1 Interleave for 1 024-byte sectors

The different bytes shall be designated as follows.

D_n are user data bytes

$P_{h,m}$ are DMP bytes, set to (FF)

C_k are CRC check bytes

$E_{s,t}$ are ECC check bytes

These bytes shall be ordered in a sequence A_n in the order in which they shall be recorded on the disk. This order is the same as that in which they are input into the controller. Depending on the value of n, these elements are:

for $1 \le n \le 1\,024$: $A_n = D_n$

for $1\,025 \le n \le 1\,036$: $A_n = P_{h,m}$

for $1\,037 \le n \le 1\,040$: $A_n = C_k$

for $1\,041 \le n \le 1\,200$: $A_n = E_{s,t}$

where:

$$h = \text{int}\left[\frac{n-1\,025}{4}\right] + 1$$

$$m = [\,(n - 1\,025) \bmod 4\,] + 1$$

$$k = n - 1\,036$$

$$s = [\,(n - 1\,041) \bmod 10\,] + 1$$

$$t = \text{int}\left[\frac{n-1\,041}{10}\right] + 1$$

The notation int[x] denotes the largest integer not greater than x..

The first three parts of A_n are 10-way interleaved by mapping them onto a two-dimensional matrix B_{ij} with 104 rows and 10 columns. Thus

for $1 \le n \le 1\,040$: $B_{ij} = A_n$

where:

$$i = 103 - \text{int}\left[\frac{n-1}{10}\right]$$

Copyright International Organization for Standardization
Provided by IHS under license with ISO
No reproduction or networking permitted without license from IHS
Not for Resale

$$j = (n - 1) \bmod 10$$

F.1.2 Interleave for 512-byte sectors

For 512-byte sectors the sequence of bytes shall be denoted by A'_n, the other notations shall be as specified in F.1.1. In addition the two (FF) bytes are shown as (FF).

$$\text{for} \quad 1 \le n \le 512 : \quad A'_n = D_n$$

$$\text{for} \quad 513 \le n \le 524 : \quad A'_n = P_{h,m}$$

$$\text{for} \quad 525 \le n \le 526 : \quad A'_n = (FF)$$

$$\text{for} \quad 527 \le n \le 530 : \quad A'_n = C_k$$

$$\text{for} \quad 531 \le n \le 610 : \quad A'_n = E_{s,t}$$

where:

$$h = \text{int} \left[\frac{n-513}{4} \right] + 1$$

$$m = [(n - 513) \bmod 4] + 1$$

$$k = n - 526$$

$$s = [(n - 531) \bmod 5] + 1$$

$$t = \text{int} \left[\frac{n-531}{5} \right] + 1$$

The first four parts of A'_n are 5-way interleaved by mapping them onto a two-dimensional matrix B'_{ij} with 106 rows and 5 columns. Thus:

$$\text{for} \quad 1 \le n \le 530 \quad B'_{ij} = A'_n$$

where:

$$i = 105 - \text{int} \left[\frac{n-1}{5} \right]$$

$$j = (n - 1) \bmod 5$$

F.2 CRC

F.2.1 General

The CRC and the ECC shall be computed over the Galois field based on the primitive polynomial

$$G_p(x) = x^8 + x^5 + x^3 + x^2 + 1$$

The generator polynomial for the CRC bytes shall be

$$G_c(x) = \prod_{i=136}^{i=139} \left(x + \alpha^i \right)$$

where the element $\alpha^i = (ß^i)^{88}$, with ß being a primitive root of $G_p(x)$. The value of the n-th bit in a byte is the coefficient of the n-th power of ß, where $0 \le n \le 7$, when ß is expressed on a polynomial basis.

Copyright International Organization for Standardization
Provided by IHS under license with ISO
No reproduction or networking permitted without license from IHS Not for Resale

F.2.2 CRC for 1 024-byte sectors

The four check bytes of the CRC shall be computed over the user data and the DMP bytes.

The information polynomial shall be

$$I_c(x) = \left[\sum_{i=1}^{i=103} \left(\sum_{j=0}^{j=9} (B_{i,j}) x^i \right) \right] + \sum_{j=0}^{j=5} (B_{0,j})\, x^0$$

The contents of the four check bytes c_k of the CRC are defined by the residual polynomial

$$R_c(x) = I_c(x)\, x^4 \qquad \text{mod } G_c(x)$$

$$R_c(x) = \sum_{k=1}^{k=4} c_k x^{4-k}$$

The last equation specifies the storage locations for the coefficients of the polynomial.

F.2.3 CRC for 512-byte sectors

The four check bytes of the CRC shall be computed over the user data, the DMP bytes and the two (FF) bytes. The information polynomial shall be

$$I'_c(x) = \left[\sum_{i=1}^{i=105} \left(\sum_{j=0}^{j=4} (B'_{i,j})\, x^i \right) \right] + (B'_{0,0})\, x^0$$

The contents of the four CRC check bytes shall be calculated as specified in F.2.2, however using polynomial $I'_c(x)$.

F.3 ECC

The primitive polynomial $G_p(x)$ and the elements α^i and β shall be as specified in F.2.1. The generator polynomial for the check bytes of the ECC shall be

$$G_E(x) = \prod_{i=120}^{i=135} (x + \alpha^i)$$

This polynomial is self-reciprocal. This property can be used to reduce the hardware size. The initial setting of the ECC register shall be all ZEROs. The bits of the computed check bytes shall be inverted before they are encoded into Channel bits.

F.3.1 ECC for 1 024-byte sectors

The 160 check bytes of the ECC shall be computed over the user bytes, the DMP bytes and the CRC bytes. The corresponding 10 information polynomials shall be:

$$I_{E_j}(x) = \sum_{i=0}^{i=103} (B_{i,j})\, x^i$$

where $0 \le j \le 9$.

The contents of the 16 check bytes $E_{s,t}$ for each polynomial $I_{Ej}(x)$ are defined by the residual polynomial

$$R_{E_j}(x) = I_{E_j}(x)\, x^{16} \qquad \text{mod } G_E(x)$$

$$R_{E_j}(x) = \sum_{t=1}^{t=16} E_{j+1,t}\, x^{16-t}$$

Copyright International Organization for Standardization
Provided by IHS under license with ISO
No reproduction or networking permitted without license from IHS
Not for Resale

The last equation specifies the storage locations for the coefficients of the polynomials.

F.3.2 ECC for 512-byte sectors

The 80 check bytes of the ECC shall be computed over the user data bytes, the DMP bytes, the two (FF) bytes and the CRC bytes. The corresponding 5 information polynomials shall be:

$$I'_{E\,j}(x) = \sum_{i=0}^{i=105} \left(B'_{i,j}\right) x^i$$

where $0 \leq j \leq 4$.

The calculation of the 16 check bytes for each of the information polynomials $I_{Ej}(x)$ shall be carried out as specified in F.3.1.

F.4 Resync

The Resync fields (see annex G) shall be inserted in the Data field to prevent loss of synchronization and to limit the propagation of errors in the user data. They are numbered consecutively and shall contain one of the following pattern of Channel bits.

0X0 100 000 001 000 000 100 00Y

0X0 100 000 001 000 000 101 00Y

Where X and Y are set to ZERO or ONE based on the preceding or following data patterns.

For 1 024-byte sectors, a field RSn shall be inserted between bytes A_{30n} and A_{30n+1}.

where $1 \leq n \leq 39$.

For 512-byte sectors, a field RSn shall be inserted between bytes A_{20n} and A_{20n+1}.

where $1 \leq n \leq 30$.

F.5 Recording sequence for the Data field

The elements of the Data field shall be recorded on the disk according to sequence A_n or A'_n, as applicable, immediately following the Sync bytes and with the Resync bytes inserted as specified in F.4.

Figures F.1 and F.2 show in matrix form the arrangement of these elements. The sequence of recording is from top-to-bottom and left-to-right.

SB	designates a Sync byte
D	designates a user byte
RS	designates a Resync byte
P	designates a DMP byte
C	designates a check byte for CRC
E	designates a check byte for ECC
(FF)	designates a (FF) byte

For 1 024-byte sectors (figure F.1) the first 104 columns contain in rows 0 to 9 the user bytes, the DMP bytes and the CRC check bytes. The next 16 columns contain only the ECC check bytes.

For 512-byte sectors (figure F.2) the first 106 columns contain in rows 0 to 4 the user bytes, the DMP bytes, the two (FF) bytes and the CRC check bytes. The next 16 columns contain only the ECC check bytes.

Copyright International Organization for Standardization
Provided by IHS under license with ISO
No reproduction or networking permitted without license from IHS Not for Resale

Column No. j → Row No. i ↓

			0	1	2	3	4	5	6	7	8	9	
SB1	SB2	SB3	D1	D2	D3	D4	D5	D6	D7	D8	D9	D10	103
			D11	D12	D13	D14	D15	D16	D17	D18	D19	D20	102
		RS1	D21	D22	D23	D24	D25	D26	D27	D28	D29	D30	101
			D31	D32	D33	D34	D35	D36	D37	D38	D39	D40	100
		RS2	D41	D42	D43	D44	D45	D46	D47	D48	D49	D50	99
													:
		RS3											:
104 rows													:
													:
		RS49											:
													:
		RS50											:
			D1011	D1012	D1013	D1014	D1015	D1016	D1017	D1018	D1019	D1020	2
		RS51	D1021	D1022	D1023	D1024	P1,1	P1,2	P1,3	P1,4	P2,1	P2,2	1
			P2,3	P2,4	P3,1	P3,2	P3,3	P3,4	C1	C2	C3	C4	0
		RS52	E1,1	E2,1	E3,1	E4,1	E5,1	E6,1	E7,1	E8,1	E9,1	E10,1	-1
			E1,2	E2,2	E3,2	E4,2	E5,2	E6,2	E7,2	E8,2	E9,2	E10,2	-2
		RS53	E1,3	E2,3	E3,3	E4,3	E5,3	E6,3	E7,3	E8,3	E9,3	E10,3	-3
16 rows													:
													:
		RS59	E1,15	E2,15	E3,15	E4,15	E5,15	E6,15	E7,15	E8,15	E9,15	E10,15	-15
			E1,16	E2,16	E3,16	E4,16	E5,16	E6,16	E7,16	E8,16	E9,16	E10,16	-16

Figure F.1 - Data field configuration, 1 024-byte sectors, ECC with 10-way interleave

Copyright International Organization for Standardization
Provided by IHS under license with ISO
No reproduction or networking permitted without license from IHS
Not for Resale

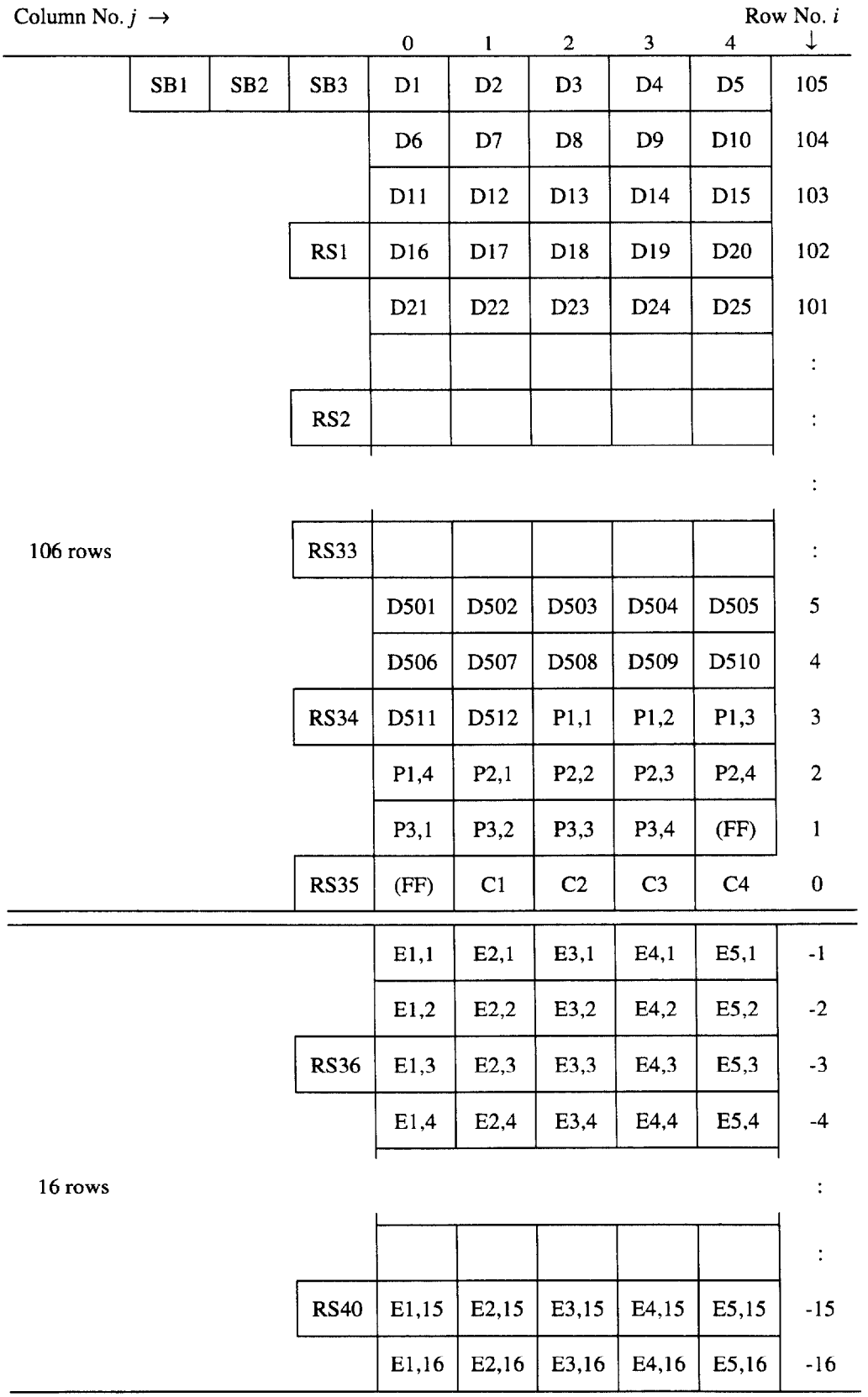

Figure F.2 - Data field configuration, 512-byte sectors, ECC with 5-way interleave

Copyright International Organization for Standardization
Provided by IHS under license with ISO
No reproduction or networking permitted without license from IHS
Not for Resale

Annex G

(normative)

Determination of Resync pattern

DSV (Digital Sum Value) is used in the descriptions which follow. Other acronyms include PLL (Phase Lock Loop), PPM (Pulse Position Modulation) and PWM (Pulse Width Modulation).

G.1 Conditions of Resync pattern

The Resync pattern has the following characteristics to satisfy its required function:

1. The Resync pattern is an irregular Channel bit pattern of seven consecutive ZERO bits and a ONE bit followed by six consecutive ZERO bits that does not occur in the (1,7) modulation code.
2. The irregularity of Resync pattern is detectable using either only leading edges or only trailing edges when dual PLL is used.
3. The number of ONEs in Resync pattern is switchable from odd number to even number or vice versa for minimizing the DC level fluctuation of the data pattern in the Data field of a sector.
4. The length of the Resync pattern is two bytes.

G.2 Resync pattern

Selection of one of the two Resync patterns shown below shall be made in order to minimize the DC level fluctuation.

The selection criteria is described in G.5.

	Data 1	Resync area	Data 2
		Resync pattern	
Resync 1	0x0	100000001000000100	00y
Resync 2	0x0	100000001000000101	00y

where:

x = ZERO or ONE
y = ZERO or ONE

Copyright International Organization for Standardization
Provided by IHS under license with ISO
No reproduction or networking permitted without license from IHS
Not for Resale

G.3 Generation algorithm of resync pattern

PREVIOUS Data 1		Resync Area								NEXT Data 2
Data bits	Channel bits	00	assumed data bits						01	Data bits
		Resync Pattern								
X1 X2		0x0						z	00y	X3 X4
00	0 001	010	100	000	001	000	000	100	001	0x
								0	000	1x
								1	001	0x
								1	000	1x
00	1 001	010	100	000	001	000	000	100	001	0x
								0	000	1x
								1	001	0x
								1	000	1x
01	0 001	010	100	000	001	000	000	100	001	0x
								0	000	1x
								1	001	0x
								1	000	1x
01	1 010	000	100	000	001	000	000	100	001	0x
								0	000	1x
								1	001	0x
								1	000	1x
10	0 101	010	100	000	001	000	000	100	001	0x
								0	000	1x
								1	001	0x
								1	000	1x
10	1 - - -		does not occur							
11	0 010	000	100	000	001	000	000	100	001	0x
								0	000	1x
								1	001	0x
								1	000	1x
11	1 - - -		does not occur							

where :

z = ZERO for Resync 1
z = ONE for Resync 2

Note 1: x1 and x2 are encoded assuming the following information bits are ZERO ZERO.
Note 2: The values of these information bits are the assumed value for encoding.
Note 3: This Channel bit was inverted after encoding in order to generate the irregular pattern.
Note 4: The value of the last three bits of the Resync area is determined by:

1) previous Channel bit assumed to be ZERO
2) the two information bits (assumed to be ZERO ONE)
3) the state of Data 2 information bit X3,
per the (1,7) encode table 3.

Copyright International Organization for Standardization
Provided by IHS under license with ISO
No reproduction or networking permitted without license from IHS Not for Resale

G.4 Minimization of DC level

The criteria for selecting either Resync pattern 1 or Resync pattern 2 in order to minimize the d.c. level fluctuation is based on the Channel bits of the Data area, and 0x0, 00y in the Resync area.

Data		Resync area		Data
		Resync pattern		
		100000001000000100		
Data Block	0x0	(Resync pattern 1)	00y	Data Block
		100000001000000101		
		(Resync Pattern 2)		

where:

x = ZERO or ONE
y = ZERO or ONE

The decision is made to select either Resync pattern 1 or Resync pattern 2 according to the procedure described in G.5.

G.5 Determination of Resync pattern

The Resync pattern to be used shall be determined by the following procedure.

1. Convert the Channel bits described in PPM data into PWM data in order to simplify handling.

   For example, if the PPM data is

   ... 0010100010010 ...

   the PWM data shall be

   ... 0011000011100 ...

   The DSV calculation shall be defined in terms of PWM data such that ZERO = -1 and ONE = +1.

   (see the example below)

Example of calculation of Block DSV_m and Resync DSV_m

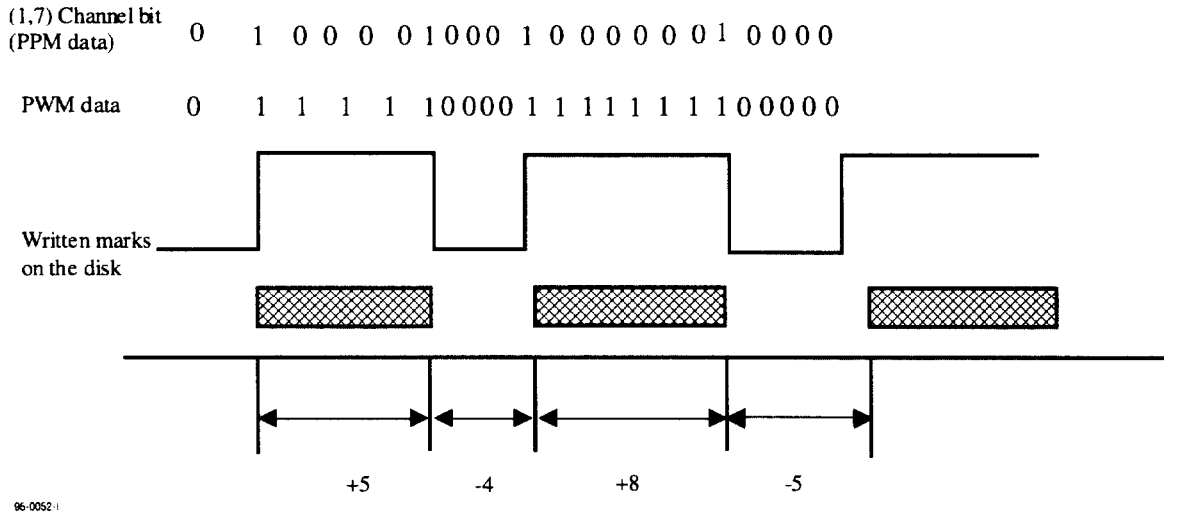

DSV_m is calculated as

$DSV_m = (+5 - 4 + 8 - 5 \ldots)$

Copyright International Organization for Standardization
Provided by IHS under license with ISO
No reproduction or networking permitted without license from IHS
Not for Resale

2. The Resync area shall be divided into two parts (RS || INV), where both parts are concatenated as follows:

RS = 0x010000000100000010 in PPM data
INV = 000y(INV1) or 100y(INV2) in PPM data .

3. The user data field shall be concatenated as

$VFO_3 \| SYNC \| B_0 \| RS_1 \| INV1 \text{ (or INV2)} \| B_1 \| RS_2 \| ...$

$... \| INV1 \text{ (or INV2)} \| B_m \| RS_{m+1} \| ... ... \| INV1 \text{ (or INV2)} \| B_N$

where :

m = 1 to N
N = 39 in the 1 024-byte sector, and
30 in the 512-byte sector.

(See figure G.1)

4. The DSV(z) function shall be defined such that the argument (z), which is a PPM data stream, shall result in the PWM DSV sum based on the last PWM state of the PWM data preceding the data in the (z) argument.

5. INV1 or INV2 shall be selected in step m using the following algorithm:

$P_0 = DSV(VFO_3 \| SYNC \| B_0 \| RS_1)$

$P_m = P_{m-1} + DSV(INV1 \| B_m \| RS_{m+}1)$
or $P_m = P_{m-1} + DSV(INV2 \| B_m \| RS)$

Select INV1 or INV2 to minimize $|P_m|$.

$P_N = P_{N-1} + DSV(INV1 \| B_N)$
or $P_N = P_{N-1} + DSV(INV2 \| B_N)$

Select INV1 or INV2 to minimize $|P_N|$.

This procedure shall be repeated from m = 1 to N, where N = 39 in 1 024-byte sector and N = 30 in 512-byte sector. If $|P_m|$ is the same for Resync pattern 1 and Resync pattern 2, Resync pattern 1 shall be selected.

Copyright International Organization for Standardization
Provided by IHS under license with ISO
No reproduction or networking permitted without license from IHS Not for Resale

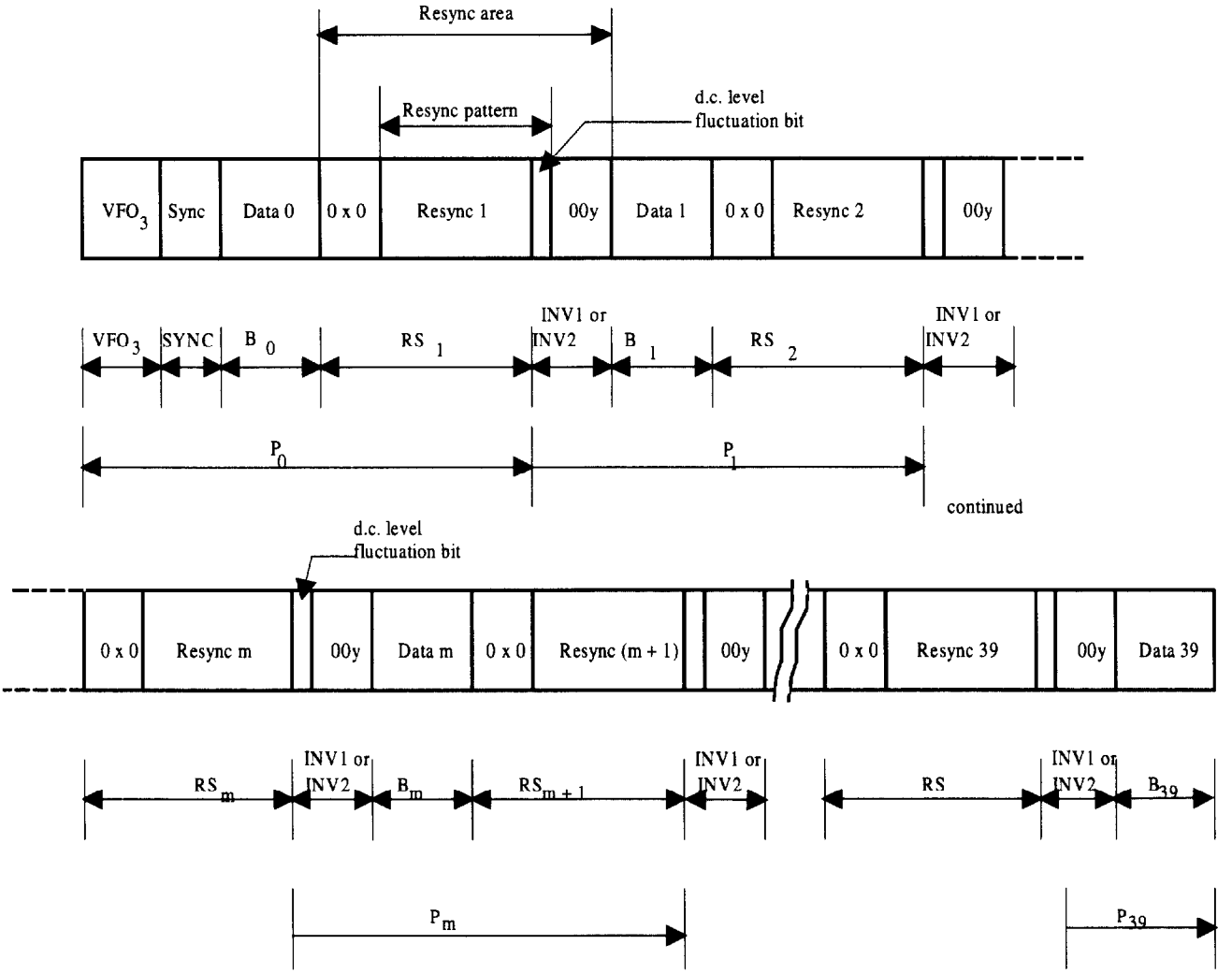

95-0053-I

NOTES:

1. The above figure is for 1 024-byte sector.

2. Each P_0, P_1, ..., P_{39} represents the total DSV from VFO_3.

Figure G.1 - Example of Resync byte

Copyright International Organization for Standardization
Provided by IHS under license with ISO
No reproduction or networking permitted without license from IHS
Not for Resale

Annex H

(normative)

Read Channel for measuring C/N and jitter

C/N and jitter shall be measured by using the following read Channel.

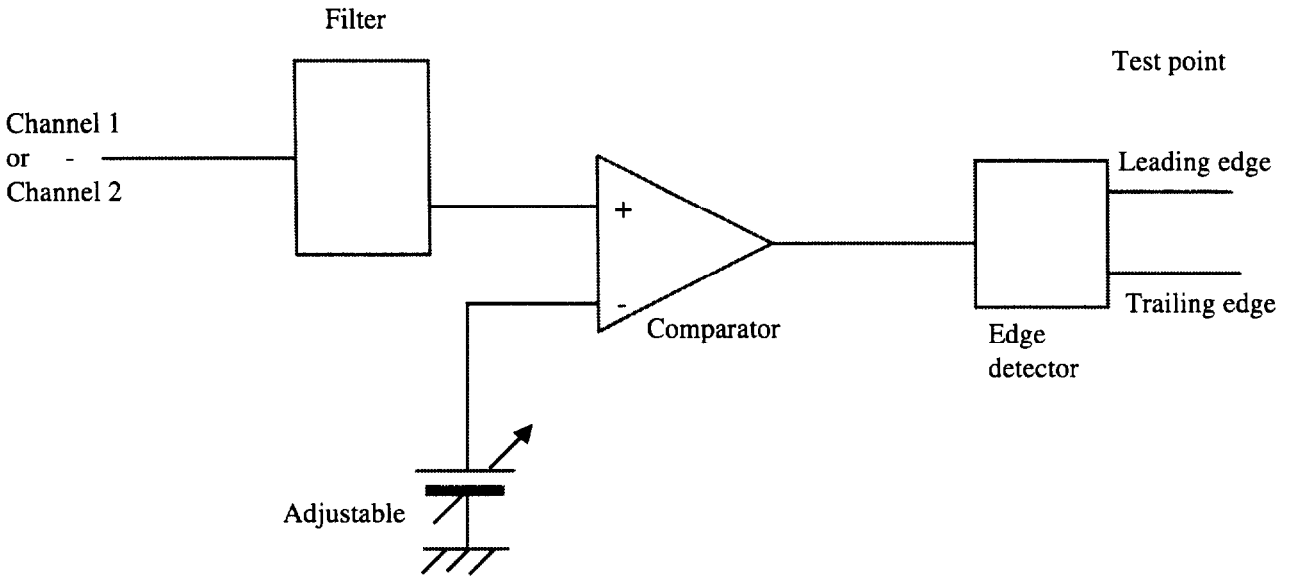

96-0058-I

Input signal:

Channel 1, for embossed marks
Channel 2, for user written marks

Filter specifications:

1) Equalizer: No
2) Filter type: 5th Bessel function
3) Low pass filter: Cut-off frequency = (2,0 to 2,5)f_{max}

Copyright International Organization for Standardization
Provided by IHS under license with ISO
No reproduction or networking permitted without license from IHS
Not for Resale

Annex J

(normative)

Timing jitter measuring procedure

The timing jitter of mark lengths or space lengths shall be measured using the following procedures.

1) Set the threshold level of the detector circuit such that the 2T mark and 2T space of the VFO for the is exactly 2 Channel bit times T long.
2) Hold the threshold level, and detect the signal edges.
3) Measure the mark lengths or space lengths using a Time Interval Analyzer.
4) Acquire 10^5 independent time interval samples excluding the data from defective areas.
5) Calculate the mean value L_n of mark or space lengths for each length n.
6) Calculate the difference between the measured mean value L_n and the ideal length of corresponding mark or space (i.e. n times T), and take the maximum value among then as St.
7) Calculate the standard deviation Jt of the timing jitter distribution; the difference between the measured length of mark or space and the mean value of corresponding mark or space length L_n shall be taken as samples.

where Jt and St are shown in figure J.1.

The mark lengths and the space lengths shall be separately examined, and the specifications should be satisfied even in the worst case.

In case of header signal evaluation, the threshold level shall be set using VFO_1 and the time interval samples shall be measured using the AM through PA fields.

In case of embossed data signal evaluation, the threshold level shall be set using VFO_3 and the time interval samples shall be measured using the Sync and Data field in the user data area, including all time interval samples from user data, DMP, CRC, ECC, and Resync.

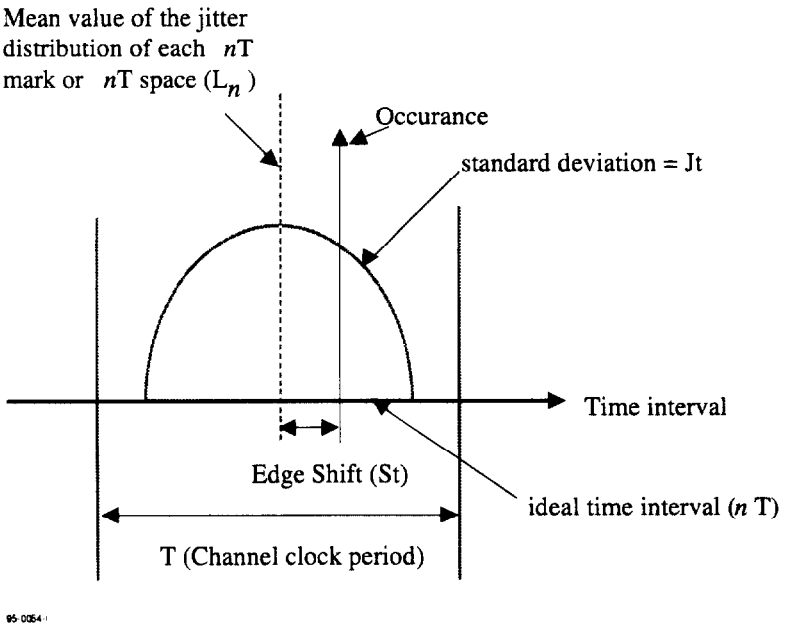

Figure J.1 - Measured distribution of timing jitter

Copyright International Organization for Standardization
Provided by IHS under license with ISO
No reproduction or networking permitted without license from IHS
Not for Resale

©ISO/IEC

Annex K

(normative)

Definition of write pulse shape

The rise and fall times, T_r and T_f, shall each be less than 4 ns for any write pulse width T_p.

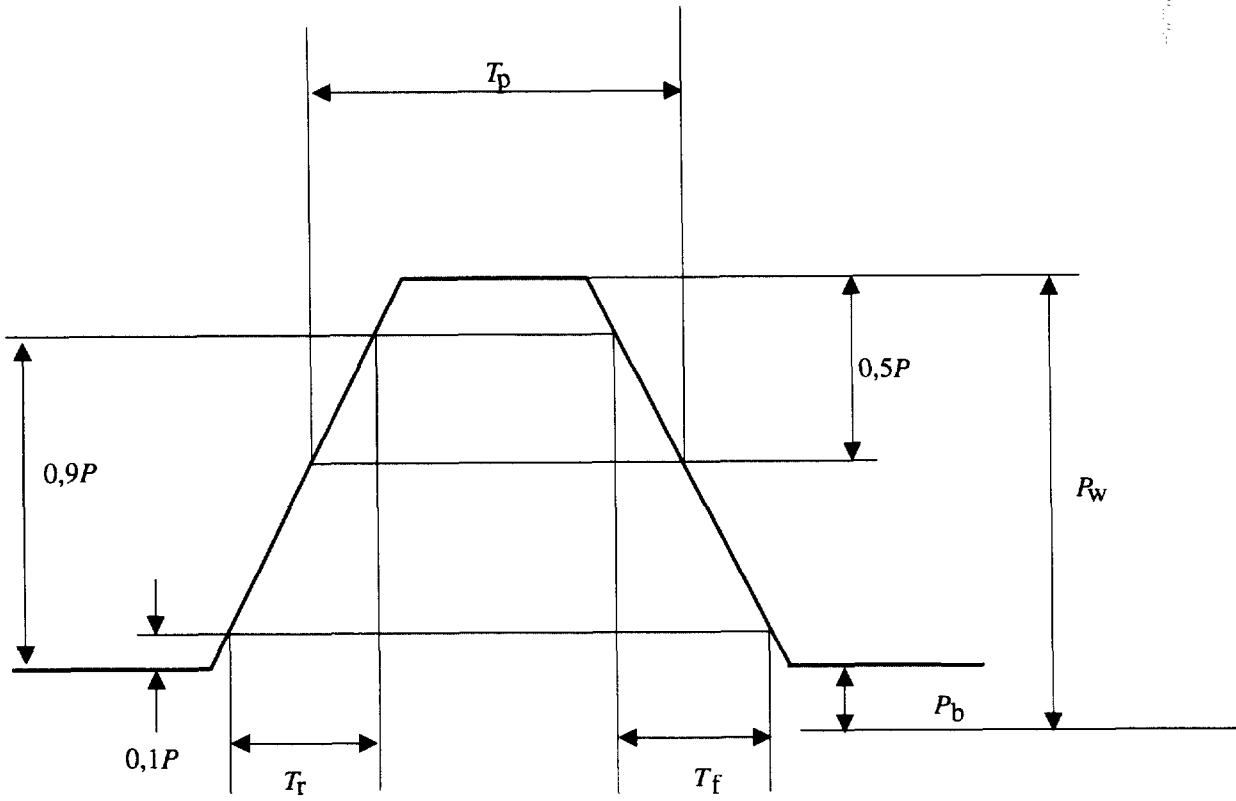

94-0143-/

P_w : write power

P_b : bias power

T_r : rise time

T_f : fall time

T_p : write pulse width

P : P_w - P_b

Copyright International Organization for Standardization
Provided by IHS under license with ISO
No reproduction or networking permitted without license from IHS
Not for Resale

Annex L

(normative)

Measurement of figure of merit

L.1 The figure of merit is, in practice, equal to the amplitude of the read signal from a recording at low frequency (in two dimensions). The written domains shall be substantially larger than the focal spot, so as to work in the low frequency region where the modulation transfer function of the optical system is one.

This implies that for a preformatted disk, rotating at 50 Hz, a signal with a frequency between 10 kHz and 100 kHz has to be written on several consecutive tracks and in between those tracks in byte 21 of the SFP Zone (see 17.4.2).

Determination of the figure of merit using an optical system as shown in annex A and with characteristics as specified in 15.1.1 will not measure media properties only but also the optical retardation of the optical system. Therefore a calibration of the optical system is needed with a conventional determination of the figure of merit by measuring the reflectance, Kerr rotation and ellipticity. This calibration can only be executed reliably on media with low coercivity.

L.2 The optical test head shall be calibrated as follows. A test disk with negligible birefringence (glass) and low coercivity magneto-optical layer is used for conventional determination of reflectance R, Kerr rotation θ and ellipticity β. The product $F_L = R \cdot \sin\theta \cdot \cos 2\beta$ is determined. On the same disk a test pattern as described above is written and read back with the optical head resulting in signal amplitude V_L. Any other disk (high or low coercivity) can now be measured with the optical head using a similar test pattern, resulting in a signal amplitude V. The figure of merit F_m of this disk is

$$F_m = F_L \cdot V / V_L$$

Copyright International Organization for Standardization
Provided by IHS under license with ISO
No reproduction or networking permitted without license from IHS
Not for Resale

Annex M

(normative)

Implementation Independent Mark Quality Determination (IIMQD) for the interchange of recorded media

The IIMQD offset test uses two special patterns consisting of seven marks and seven spaces each, one mark and one space of each run length from 2T to 8T, to test the drive's ability to form marks of the proper length for the purposes of media interchange.

The following procedure shall be used to determine IIMQD for the interchange of recorded media.

Erase the tracks and write one of the following test patterns as a group many times on several tracks at the 30 mm, 45 mm, and 60 mm radii using the laser power write method of the drive under test. A separate test shall be done for each pattern.

Pattern No. 1:

2T	2T	3T	3T	4T	4T	5T	5T	6T	6T	7T	7T	8T	8T
M	S	M	S	M	S	M	S	M	S	M	S	M	S

Pattern No. 2:

2T	2T	3T	3T	4T	4T	5T	5T	6T	6T	7T	7T	8T	8T
S	M	S	M	S	M	S	M	S	M	S	M	S	M

where M and S stand for mark and space respectively.

Read and detect the data signal with the following equalization in addition to the detection method given in 24.2.5. The threshold value TV may be varied in this test to compensate for the edge motion of the marks due to parameter variations.

$$Eq(\omega) = 1 - 2A\cos(\omega \cdot 2T)$$

where: $A = 0,1$

$\omega = 2\pi f$

T is the Channel clock period for the zone being read.

This equalizer can be implemented with a five tap, tapped delay line filter having tap weights of -A, 0, 1, 1, -A and 0, -A ,1, -A, 0 and clock periods of 39,4 and 19,7 ns for 30 mm and 60 mm radius respectively with a tap delay of 39,4 ns and a disk speed of 3 000 rpm.

Measure the detected signal from the written tracks in two ways using a time interval analyzer:

1) the mean leading-to-trailing edge (mark) lengths and

2) the mean trailing-to-leading edge (space) lengths.

The measurements shall be made using 10^5 independent time interval samples on several tracks at each radial location. The offset for any desired run of length n is the absolute value of the difference of the detected signal length L_n minus n times T. Adjust the threshold level once for both measurements for each pattern to minimize the worst case mark and space offset for this radial position and express it as a percentage of the Channel bit time T. The modulation method offset for the given test pattern is the maximum percentage offset over all run lengths n and over all radial positions R.. The overall offset O_{mod} with regard to media interchange is the larger of the numbers for each pattern, p.

$$O_{\text{mod}} = 100 \max_{n,R} \left(\frac{|L_n - n\text{T}|}{\text{T}} \right) \text{percent}$$

The modulation method offset O_{mod} shall be less than 10 % of the time period T of one Channel bit.

Copyright International Organization for Standardization
Provided by IHS under license with ISO
No reproduction or networking permitted without license from IHS Not for Resale

Annex N

(normative)

Requirements for interchange

N.1 Equipment for writing

The disk under test shall have been written with arbitrary data by a disk drive for data interchange use in the operating environment.

N.2 Test equipment for reading

N.2.1 General

The read test shall be performed on a test drive in the test environment. The rotational frequency of the disk when reading shall be as defined in clause 9.5.

The direction of rotation shall be as defined in clause 10.5.9

N.2.2 Read Channel

N.2.2.1 Characteristics of the optical beam

The optical beam used for reading shall comply with the requirements of 9.2 b), c), d) and f).

N.2.2.2 Read power

The read power shall comply with the requirements of 9.3.

N.2.2.3 Optics

The optical head used for reading shall comply with the requirements of annex N.

N.2.2.4 Read amplifier

The read amplifier after the photo detector in both Channels 1 and 2 shall have a flat response from 100 kHz to 14,8 MHz within ± 1 dB.

N.2.2.5 Analogue to binary conversion

The signals from the read amplifier shall be converted from analogue to binary. The converter for Channel 1 shall work properly for signals from pre-recorded marks with properties as defined in 17.1.

The converter for Channel 2 shall work properly for signals from user-written marks with properties as defined in 17.3.

N.2.2.6 Binary-to-digital conversion

The binary signal shall be converted to a digital signal according to the rules of the recording code.

N.2.3 Tracking

The open-loop transfer function for the axial and radial tracking servo shall be

$$H = \frac{(2\pi f_0)^2}{cs^2}\left(\frac{1+\frac{sc}{2\pi f_0}}{1+\frac{s}{2\pi f_0 c}}\right)$$

Copyright International Organization for Standardization
Provided by IHS under license with ISO
No reproduction or networking permitted without license from IHS
Not for Resale

where $s = i2\pi f$, within an accuracy such that $|1+H|$ not deviate more than ± 20% from its nominal value in a bandwidth from 50 Hz to 10 kHz.

The constant c shall be 3. The open-loop 0-dB frequency f_0 shall be 1 250 Hz for the axial servo and 1 740 Hz for the radial servo. The open-loop DC gain of the axial servo shall be at least 80 dB.

N.3 Requirements for the digital read signals

A byte error is defined by a byte in which one or more bits have a wrong setting, as detected by the error detection and correction circuit.

N.3.1 Any sector accepted as valid during the writing process shall not contain byte errors in Channel 2 after the error correction circuit.

N.3.2 Any sector not accepted as valid during the writing process shall have been rewritten according to the rules for defect management.

N.4 Requirements for the digital servo signals

The focus of the optical beam shall not jump tracks voluntarily.

N.5 Requirement for interchange

An interchanged optical disk cartridge meets the requirements for interchangeability if it meets the requirements of N.3 and N.4 when it is written on an interchange drive according to N.1 and read on a test drive according to N.2.

Copyright International Organization for Standardization
Provided by IHS under license with ISO
No reproduction or networking permitted without license from IHS Not for Resale

Annex P

(informative)

Office environment

Due to their construction and mode of operation optical disk cartridges have considerable resistance to the effects of dust particles around and inside the disk drive. Consequently it is not generally necessary to take special precautions to maintain a sufficiently low concentration of dust particles.

Operation in heavy concentrations of dust should be avoided e.g. in a machine shop or on a building site.

Office environment implies an environment in which personnel may spend a full working day without protection and without suffering temporary or permanent discomfort.

Copyright International Organization for Standardization
Provided by IHS under license with ISO
No reproduction or networking permitted without license from IHS
Not for Resale

Annex Q

(informative)

Derivation of the operating climatic environment

This annex gives some background on how some of the conditions of the operating environment in clause 8.1.2 have been derived.

Q.1 Standard climatic environment classes

The conditions of the ODC operating environment are, with a few exceptions mentioned below, based on parameter values of the IEC standard climatic environment class 3K3 described in IEC publication 721-3-3. This publication defines environmental classes for stationary use of equipment at weather-protected locations.

The IEC class 3K3 refers to climatic conditions which

"... may be found in normal living or working areas, e.g. living rooms , rooms for general use (theatres, restaurants etc.), offices, shops, workshops for electronic assemblies and other electrotechnical products, telecommunication centres, storage rooms for valuable and sensitive products."

Q.2 Overtemperature considerations

While IEC class 3K3 defines the limits for the room climate only, the ODC operating environment specification in this International Standard takes into consideration also system and drive overtemperature. This means that when inserted in a drive, the ODC will sense a temperature which is above the ambient room temperature. The figures in the operating environment specification have been calculated from the assumption that overtemperature may be up to 20 °C.

Q.3 Absolute humidity

The introduction of the parameter

absolute humidity (unit : g water / m^3 of air)

is very useful when studying overtemperature. When the temperature rises inside a drive, the relative humidity goes down but the absolute humidity remains substantially constant. So, making room for overtemperature in the operating environment specification affects not only the upper temperature limit but also the lower relative humidity limit. The relationship between these parameters is shown in the climatogram (the relative humidity vs. temperature map) of the ODC operating environment, figure Q.1.

The absolute humidity restrictions influence the operating environment in the following two ways:

i. Combination of high temperatures and high relative humidities are excluded. Such combinations could have negative influence on the performance and the life of ODCs.

ii. Combinations of low temperatures and low relative humidities are excluded. Such combinations are very unlikely to occur in worldwide normal office environments.

Q.4 Deviations from the IEC standard environment class

Apart from the change introduced by the overtemperature considerations above, there are a few more parameter values which are not based on IEC class 3K3. These are:

– Atmospheric pressure

The IEC 3K3 lower limit of 70 kPa has been extended to 60 kPa. ODCs according to this International Standard show no intrinsic pressure sensitivity and 70 kPa excludes some possible markets for ODCs.

Copyright International Organization for Standardization
Provided by IHS under license with ISO
No reproduction or networking permitted without license from IHS Not for Resale

– Absolute humidity

The IEC 3K3 value for the upper limit of 25 g/m^3 has been raised to 30 g/m^3 in view of some expected operation in portable devices outside the controlled office environment.

– Temperature

The maximum temperature around the ODC, i.e. room temperature plus overtemperature, has been limited to 55 °C (while IEC 3K3 + 20 °C would have become 60 °C). For ODCs according to this International Standard, however, the 55 °C limit is considered to be a physical limit above which operation (as well as storage) is not safe.

This means that equipment designers may want to ensure adequate cooling inside the drive especially when the room temperature approaches the upper IEC 3K3 limit of 40 °C.

– Further

The rates of change (the gradients) of temperature and relative humidity are not according to IEC 3K3.

Q.5 Wet bulb temperature specifications

Instead of specifying limits for the absolute humidity, some of the earlier standards for ODCs as well as those for other digital data storage media often use restrictions of the parameter

wet bulb temperature (unit: °C)

in order to avoid too severe combinations of high temperatures and high relative humidities.

In order to facilitate comparisons between different specifications, figure Q.2 shows wet bulb temperatures of interest for the ODC operating environment. as well as for the testing and storage environments Since wet bulb temperatures vary slightly with the atmospheric pressure, the diagram is valid for the normal pressure of 101,3 kPa only.

Copyright International Organization for Standardization
Provided by IHS under license with ISO
No reproduction or networking permitted without license from IHS
Not for Resale

©ISO/IEC

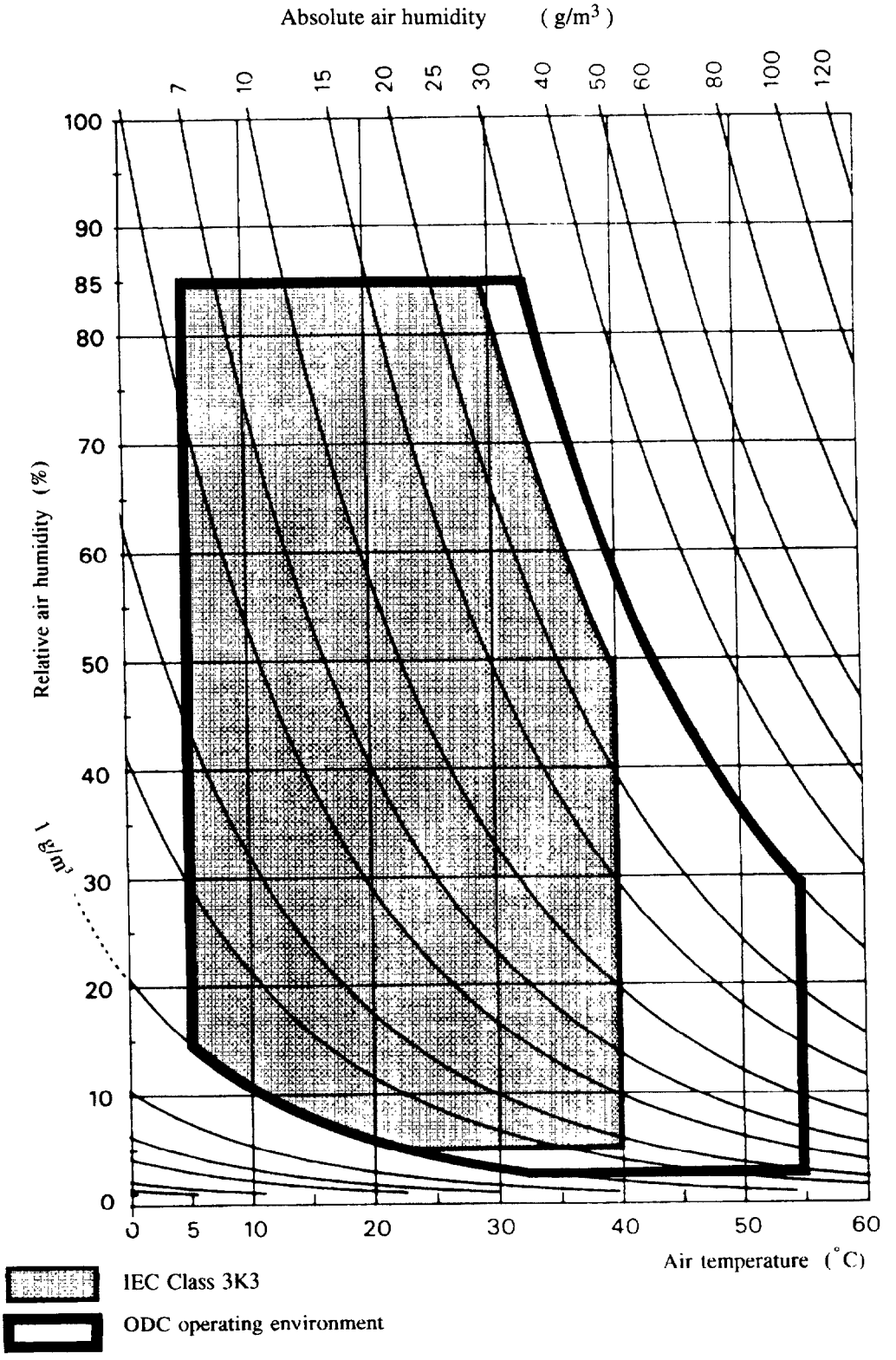

Figure Q.1 - Climatogram of IEC Class 3K3 and the ODC operating environment

Copyright International Organization for Standardization
Provided by IHS under license with ISO
No reproduction or networking permitted without license from IHS
Not for Resale

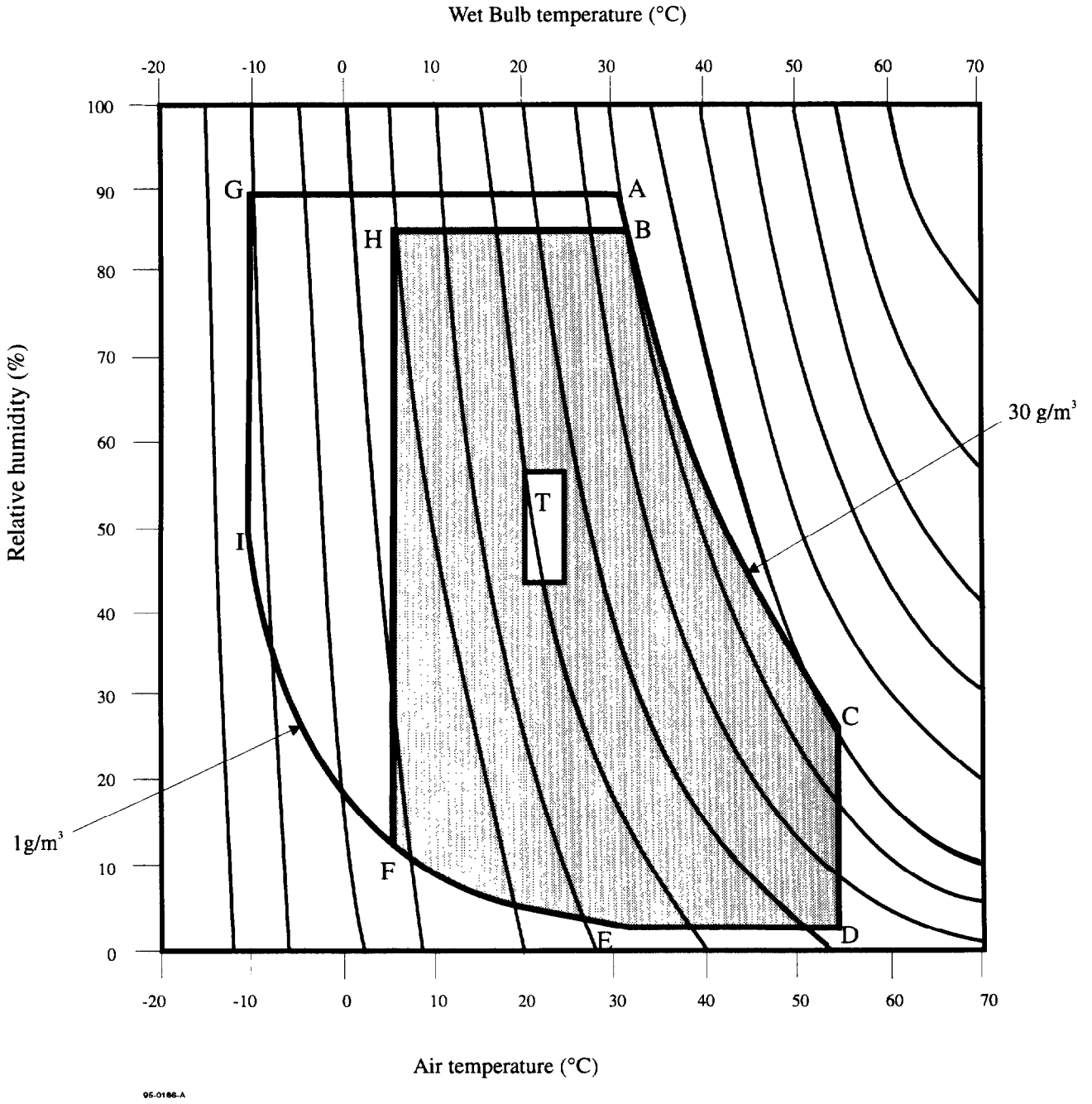

Figure Q.2 - Wet bulb temperatures of the operating and storage environments

Copyright International Organization for Standardization
Provided by IHS under license with ISO
No reproduction or networking permitted without license from IHS
Not for Resale

Table Q.1 - Position of the main points

Position	Air temperature	Relative humidity	Wet bulb temperature
A	31,7 °C	90,0 %	30,3 °C
B	32,8 °C	85,0 %	30,6 °C
C	55,0 °C	28,8 %	35,5 °C
D	55,0 °C	3,0 %	21,9 °C
E	31,7 °C	3,0 %	12,1 °C
F	5,0 °C	14,6 %	-1,4 °C
G	-10,0 °C	90,0 %	-10,3 °C
H	5,0 °C	85,0 %	4,0 °C
I	-10,0 °C	46,9 %	-11,8 °C
Test environment (T)	23,0 °C ± 2,0 °C	50,0 % ± 5,0 %	--------
Storage environment	is determined by A-B-C-D-E-F-I-G-A		
Operating environment	is determined by B-C-D-E-F-H-B		

Annex R

(informative)

Transportation

R.1 General

As transportation occurs under a wide range of temperature and humidity variations, for differing periods, by many methods of transport and in all parts of the world it is not possible to specify conditions for transportation or for packaging.

R.2 Packaging

The form of packaging should be agreed between sender and recipient or, in the absence of such agreement, is the responsibility of the sender. It should take account of the following hazards.

R.2.1 Temperature and humidity

Insulation and wrapping should be designed to maintain the conditions for storage over the estimated period of transportation.

R.2.2 Impact loads and vibration

Avoid mechanical loads that would distort the shape of the cartridge.

Avoid dropping the cartridge.

Cartridges should be packed in a rigid box containing adequate shock absorbent material.

The final box should have a clean interior and a construction that provide sealing to prevent the ingress of dirt and moisture.

Copyright International Organization for Standardization
Provided by IHS under license with ISO
No reproduction or networking permitted without license from IHS Not for Resale

Annex S

(informative)

Sector retirement guidelines

This International Standard assumes that up to 2 048 sectors may be replaced in any of the following cases:

- A sector does not have at least one reliable ID field.
- Only one of the two ID fields in one sector is reliable, and the current sector number is contradictory to the one anticipated by the preceding sectors.
- A single defect of more than 30 bytes in a 1 024-byte sector is detected. (15 bytes in a 512-byte sector)
- The total number of defective bytes exceeds 40 bytes in a 1 024-byte sector (15 bytes in a 512-byte sector), or 5 bytes in one ECC interleave of a 1 024-byte sector (3 bytes in a 512-byte sector).
- For Type WO, the total number of defective bytes in the twelve (FF) bytes for control information, as specified in 15.10.3, exceeds 2.

Copyright International Organization for Standardization
Provided by IHS under license with ISO
No reproduction or networking permitted without license from IHS
Not for Resale

Annex T

(informative)

Track deviation measurement

The deviation of a track from its nominal location is measured in the same way as a drive sees a track, i.e. through a tracking servo. The strength of the reference servo used for the test is in general less that the strength of the same servo in a normal drive. The difference in strength is intended for margins in the drive. The deviation of the track is related to the tracking error between the track and the focus of the optical beam, remaining after the reference servo. The tracking error directly influences the performance of the drive, and is the best criterion for testing track deviations.

The specification of the axial and radial deviations can be described in the same terms. Therefore, this annex applies to both axial and radial track deviations.

T.1 Relation between requirements

The acceleration required by the motor of the tracking servo to make the focus of the optical beam follow the tracks on the disk (see 11.4.6 and 11.4.8) is a measure for the allowed deviations of the tracks. An additional measure is the allowed tracking error between the focus and the track (see 20.2.4). The relation between both is given in figure T.1 where the maximum allowed amplitude of a sinusoidal track deviation is given as a function of the frequency of the deviation. It is assumed in the figure that there is only one sinusoidal deviation present at a time.

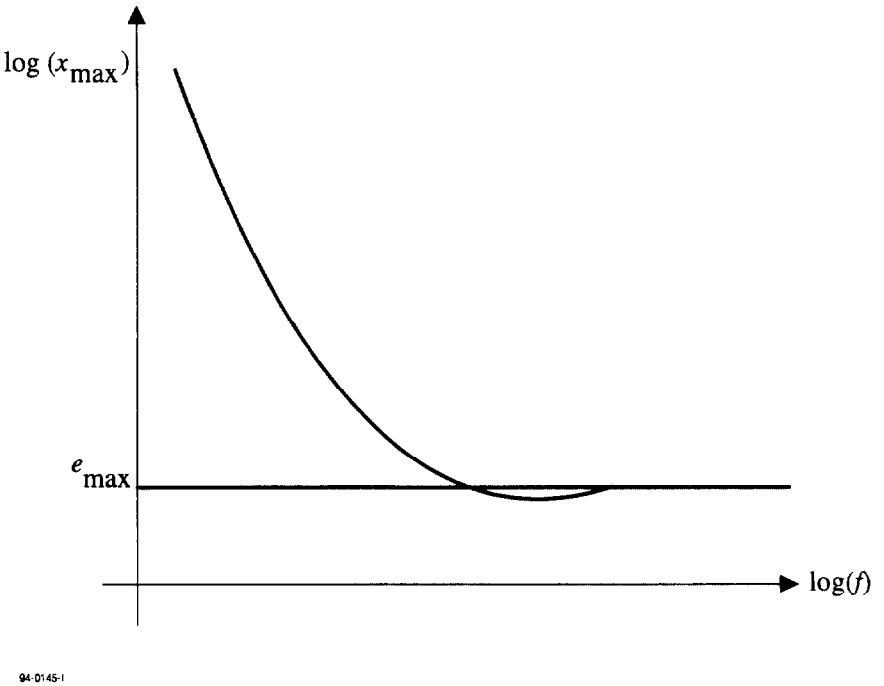

Figure T.1 - Maximum allowed amplitude of a single, sinusoidal track deviation

At low frequencies the maximum allowed amplitude x_{max} is given by

$$x_{max} = a_{max} / (2\pi f)^2, \quad (1)$$

where a_{max} is the maximum acceleration of the servo motor.

Copyright International Organization for Standardization
Provided by IHS under license with ISO
No reproduction or networking permitted without license from IHS Not for Resale

At high frequencies the maximum allowed amplitude x_{max} is given by

$$x_{max} = e_{max} \tag{2}$$

where e_{max} is the maximum allowed tracking error. The connection between both frequency regions is given in T.3.

T.2 Reference Servo

The above restrictions of the track deviations is equal to the restriction of the track deviations for a reference servo. A reference servo has a well-defined transfer function, and reduces a single, sinusoidal track deviation with amplitude x_{max} to a tracking error e_{max} as in figure T.1.

The open-loop transfer function of the reference servo shall be

$$H_s(i\omega) = \frac{1}{c}\left(\frac{\omega_0}{i\omega}\right)^2 \frac{1+\frac{i\omega c}{\omega_0}}{1+\frac{i\omega}{c\omega_0}} \tag{3}$$

where $i = \sqrt{-1}$, $\omega = 2\pi f$ and $\omega_0 = 2\pi f_0$, with f_0 the 0 dB frequency of the open-loop transfer function. The constant c gives the cross-over frequencies of the lead-lag network of the servo: the lead break frequency $f_1 = f_0$:c and the lag break frequency $f_2 = f_0$xc. The reduction of a track deviation x to a tracking error e by the reference servo is given by

$$\frac{e}{x} = \frac{1}{1+H_s} \tag{4}$$

If the 0 dB frequency is specified as

$$\omega_0 = \sqrt{\frac{a_{max}\,c}{e_{max}}} \tag{5}$$

then a low-frequency track deviation with an acceleration a_{max} will be reduced to a tracking error e_{max}, and a high frequency track deviation will not be reduced. The curve in figure T.1 is given by

$$x_{max} = e_{max} \mid 1+H_s \mid \tag{6}$$

The maximum acceleration required from the motor of this reference servo is

$$a_{max}(\text{motor}) = e_{max}\,\omega^2 \mid 1+H_s \mid . \tag{7}$$

At low frequencies $f < f_0 / c$ applies

$$a_{max}(\text{motor}) = a_{max}(\text{track}) = \frac{(\omega_0)^2 e_{max}}{c} \tag{8}$$

Hence, it is permitted to use a_{max}(motor) as specified for low frequencies in 11.4.6 and 11.4.8 for the calculation of ω_0 of a reference servo.

T.3 Requirement for track deviations

The track deviations shall be such that, when tracking with a reference servo on a disk rotating at the specified frequency, the tracking error shall not be larger than e_{max} during more than 7,2 µs.

The open-loop transfer function of the reference servo for axial and radial tracking shall be given by equation (3) within an accuracy such that |1+H| does not differ by more than ± 20% from its nominal value in a bandwidth from 50 Hz to 170 kHz.

Copyright International Organization for Standardization
Provided by IHS under license with ISO
No reproduction or networking permitted without license from IHS
Not for Resale

The constant c shall be 3. The 0 dB frequency $\frac{\omega_0}{2\pi}$ shall be given by equation (5), where a_{max} and e_{max} for axial and radial tracking are specified in 20.2.4. 11.4.6 and 11.4.8.

T.4 Measurement implementation

Three possible implementations for an axial or radial measurement system have been given below. H_a is the open-loop transfer function of the actual tracking servo of the drive. H_s is the transfer function for the reference servo as given in equation (3). x and y are the position of the track and the focus of the optical beam. e_s is the tracking error after a reference servo, the signal of which has to be checked according to the previous paragraph.

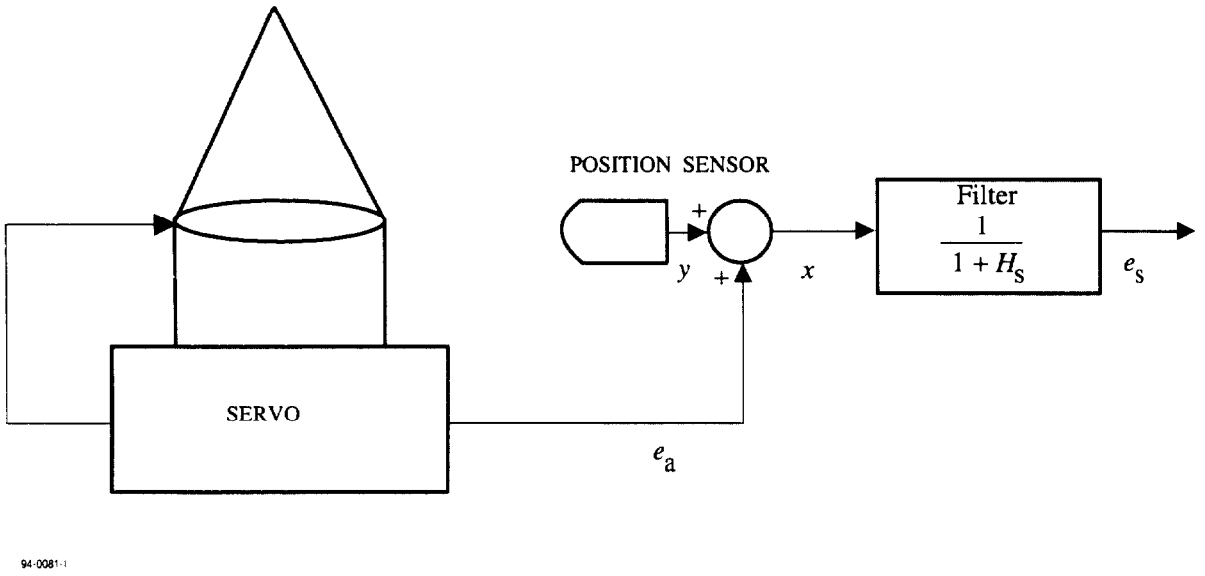

Figure T.2 - Implementation of a reference servo by filtering the track position signal with the reduction characteristics of the reference servo

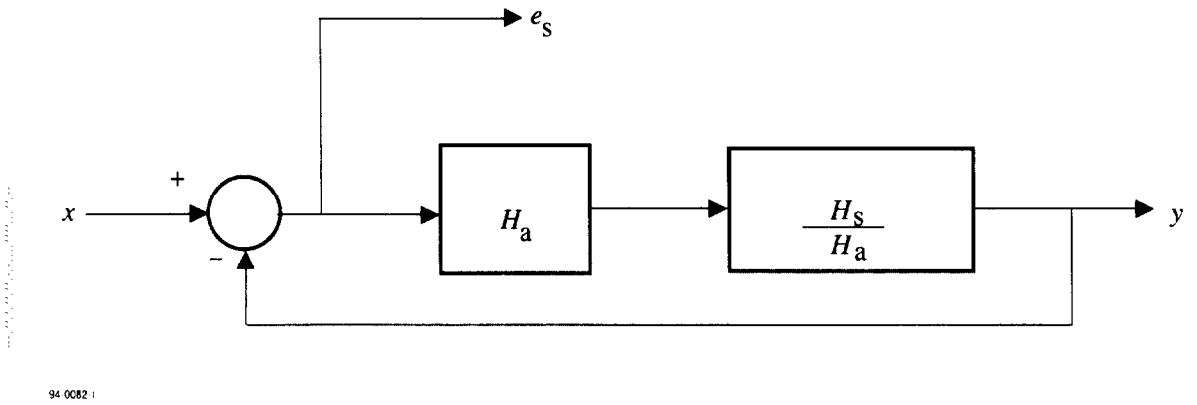

Figure T.3 - Implementation of a reference servo by changing the transfer function of the actual servo

Copyright International Organization for Standardization
Provided by IHS under license with ISO
No reproduction or networking permitted without license from IHS
Not for Resale

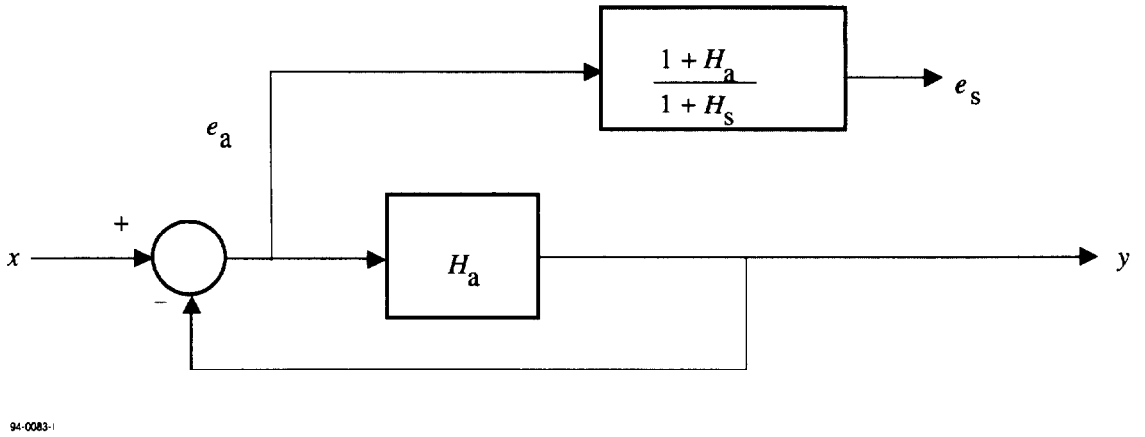

Figure T.4 - Implementation of a reference servo by changing the tracking error of the actual servo

The optimum implementation depends on the characteristics H_a and H_s. Good results for motors in leaf springs are often obtained by using separate circuits in a low and high frequency Channel. The implementation of figure T.2 is used in the low-frequency Channel, while that of figures T.3 or T.4 is used in the high-frequency Channel. The signals from both channels are added with a reversed cross-over filter to get the required tracking error. In the low-frequency Channel one can also use the current through the motor as a measure of the acceleration of the motor, provided the latter is free from hysteresis. The current must be corrected for the transfer function of the motor and then be converted to a tracking error with a filter with a transfer function $\frac{e}{a} = \frac{e}{x\omega^2}$ derived from equation (4).

Copyright International Organization for Standardization
Provided by IHS under license with ISO
No reproduction or networking permitted without license from IHS
Not for Resale

Annex U

(informative)

Values to be implemented in existing and future standards

This International Standard specifies values for bytes which identify optical disk cartridges which conform to this International Standard. It is expected that other types of optical disk cartridges will be developed in future. It is therefore recommended that the following values be used for these other cartridges.

U.1 Byte 0 of the Control Track PEP Zone

Setting of bits 6 to 4:

001	should mean Constant Linear Velocity (CLV)
010	should mean Zoned Constant Angular Velocity (ZCAV)
011	should mean Zoned Constant Linear Velocity (ZCLV)

U.2 Byte 7 of the Control Track PEP Zone

The following bit patterns should have the indicated meanings.

0000 0000	Read-only ODCs (ROM)
0001 0000	Write once ODCs according to ISO/IEC 9171-1
0001 0001	WO ODC using MO recording
0010 0000	Rewritable ODCs using MO recording
0101 0001	WO ODCs using exchange coupled Direct Over Write (DOW)
0110 0000	Rewritable ODCs using exchange coupled DOW
0011 0000	Rewritable ODCs of the type phase change
1001 0000	Partial ROM of Write once ODCs
1010 0000	Partial ROM of MO
1011 0000	Partial ROM of phase change

Note that when the most significant bit is set to ONE, this indicates a partial ROM.

See also 17.3.2.1.4.

Copyright International Organization for Standardization
Provided by IHS under license with ISO
No reproduction or networking permitted without license from IHS Not for Resale

Annex V

(informative)

Guidelines for the use of Type WO ODCs

This annex lists some important points to be observed when using the Type WO ODCs specified by this International Standard.

a) Read the PEP and/or the SFP when the ODC is inserted into the drive to ascertain the media type, so as to enable and/or disable the appropriate host commands. If the drive is not intended to support this type of ODC, reject the disk with an appropriate error message and disallow any further operations on the disk.

b) Read the DDS when the disk is inserted into the drive to ascertain if the disk has been initialized. If it has, disallow re-initialization. If it has not been initialized, disallow access to the write once zone.

c) Erase the write once zone before initialization is complete. Record the DDSs only at the end of initialization to allow incomplete initializations to be detected.

d) Before writing a sector, first determine whether or not it has been already written. This can be ascertained, for example, by inspecting the contents of the 12 (FF) bytes, however this does not apply to DMAs. If these are set to (FF), disallow writing the sector.

e) Disallow commands that can directly or indirectly alter written data such as: SCSI Erase, SCSI Reassign Blocks, SCSI Update Block.

f) Disallow the SCSI Write Long command. Always write user data with DMP, CRC, and ECC fields as specified by this International Standard.

--`,,```,,,,````-`-`,,`,,`,`,,`---

Copyright International Organization for Standardization
Provided by IHS under license with ISO
No reproduction or networking permitted without license from IHS
Not for Resale

© ISO/IEC

ICS 35.220.30

Descriptors: data processing, information interchange, data recording, data recording devices, optical disks, optical disk cartridges, specifications, dimensions, physical properties, mechanical properties, optical properties, magnetic properties, track formats, interchangeability.

Price based on 127 pages

Copyright International Organization for Standardization
Provided by IHS under license with ISO
No reproduction or networking permitted without license from IHS

Not for Resale