INTERNATIONAL STANDARD

ISO/IEC 13642

Second edition
1999-12-15

Information technology — Elements of management information related to the OSI Physical Layer

Technologies de l'information — Éléments d'information de gestion se rapportant à la couche physique OSI

No reproduction or networking permitted without license from IHS

Reference number
ISO/IEC 13642:1999(E)

© ISO/IEC 1999

Provided by IHS under license with ISO

Copyright International Organization for Standardization
Not for Resale

PDF disclaimer

This PDF file may contain embedded typefaces. In accordance with Adobe's licensing policy, this file may be printed or viewed but shall not be edited unless the typefaces which are embedded are licensed to and installed on the computer performing the editing. In downloading this file, parties accept therein the responsibility of not infringing Adobe's licensing policy. The ISO Central Secretariat accepts no liability in this area.

Adobe is a trademark of Adobe Systems Incorporated.

Details of the software products used to create this PDF file can be found in the General Info relative to the file; the PDF-creation parameters were optimized for printing. Every care has been taken to ensure that the file is suitable for use by ISO member bodies. In the unlikely event that a problem relating to it is found, please inform the Central Secretariat at the address given below.

No reproduction or networking permitted without license from IHS

© ISO/IEC 1999

All rights reserved. Unless otherwise specified, no part of this publication may be reproduced or utilized in any form or by any means, electronic or mechanical, including photocopying and microfilm, without permission in writing from either ISO at the address below or ISO's member body in the country of the requester.

ISO copyright office
Case postale 56 • CH-1211 Geneva 20
Tel. + 41 22 749 01 11
Fax + 41 22 734 10 79
E-mail copyright@iso.ch
Web www.iso.ch

Printed in Switzerland

Provided by IHS under license with ISO

© ISO/IEC 1999 – All rights reserved

Copyright International Organization for Standardization
Not for Resale

CONTENTS

		Page
1	Scope	1
2	Normative references	1
	2.1 Identical Recommendations | International Standards	1
	2.2 Paired Recommendations | International Standards equivalent in technical content	2
3	Definitions	2
	3.1 Basic Reference Model definitions	2
	3.2 Management framework definitions	2
	3.3 Systems management overview definitions	3
	3.4 Common management information service definitions	3
	3.5 Management information model definitions	3
	3.6 GDMO definitions	3
4	Symbols and abbreviations	3
5	Elements of Physical Layer Management Information	4
	5.1 Managed Object Hierarchy	4
	5.2 Common Physical Layer GDMO definitions	5
	5.3 The Physical Layer Subsystem Managed Object	6
	5.4 Physical Entity Managed Object	7
	5.5 Physical Service Access Point Managed Object	7
	5.6 Data-circuit Managed Object	8
	5.7 Physical Connection Managed Object	11
6	ASN.1 Module	12
	6.1 Object identifier definitions	12
	6.2 Other definitions	12
7	Conformance	13
	7.1 Conformance requirements to this Recommendation | International Standard	13
Annex A – Allocation of Object Identifiers		14
Annex B – Shorthand description of Managed Objects		15
Annex C – Example of the use of relationship attributes		17

--`,,```,,,,````-`-`,,`,,`,`,,`---

© ISO/IEC 1999 – All rights reserved

Provided by IHS under license with ISO

Copyright International Organization for Standardization
Not for Resale

Foreword

ISO (the International Organization for Standardization) and IEC (the International Electrotechnical Commission) form the specialized system for worldwide standardization. National bodies that are members of ISO or IEC participate in the development of International Standards through technical committees established by the respective organization to deal with particular fields of technical activity. ISO and IEC technical committees collaborate in fields of mutual interest. Other international organizations, governmental and non-governmental, in liaison with ISO and IEC, also take part in the work.

International Standards are drafted in accordance with the rules given in the ISO/IEC Directives, Part 3.

In the field of information technology, ISO and IEC have established a joint technical committee, ISO/IEC JTC 1. Draft International Standards adopted by the joint technical committee are circulated to national bodies for voting. Publication as an International Standard requires approval by at least 75 % of the national bodies casting a vote.

Attention is drawn to the possibility that some of the elements of this International Standard may be the subject of patent rights. ISO and IEC shall not be held responsible for identifying any or all such patent rights.

International Standard ISO/IEC 13642 was prepared by Joint Technical Committee ISO/IEC JTC 1, *Information technology*, Subcommittee SC 6, *Telecommunications and information exchange between systems*, in collaboration with ITU-T. The identical text is published as ITU-T Recommendation X.281.

This second edition cancels and replaces the first edition (ISO/IEC 13642:1996), which has been technically revised.

Annex A forms a normative part of this International Standard. Annexes B and C are for information only.

Provided by IHS under license with ISO
© ISO/IEC 1999 – All rights reserved
Copyright International Organization for Standardization
Not for Resale

INTERNATIONAL STANDARD

ITU-T RECOMMENDATION

INFORMATION TECHNOLOGY – ELEMENTS OF MANAGEMENT INFORMATION RELATED TO THE OSI PHYSICAL LAYER

1 Scope

This Recommendation | International Standard provides the specification of management information within an Open System related to those operations of the OSI Physical Layer specified by the specifications in this Recommendation | International Standard. Specifics on how Physical Layer management is accomplished is beyond the scope of this Recommendation | International Standard. Physical Layer management is defined by specifying:

- the managed object class definition of Physical Layer Managed Objects following guidelines put forth by the *Structure of Management Information* (see ITU-T Recs. X.720 | ISO/IEC 10165-1 to X.723 | ISO/IEC 10165-5;
- the relationship of the Managed Objects and attributes to both the operation of the layer and to other objects and attributes of the layer; and
- the action type operations on the attributes of Physical Layer Managed Objects that are available to OSI Systems Management.

2 Normative references

The following Recommendations and International Standards contain provisions which, through reference in this text, constitute provisions of this Recommendation | International Standard. At the time of publication, the editions indicated were valid. All Recommendations and Standards are subject to revision, and parties to agreements based on this Recommendation | International Standard are encouraged to investigate the possibility of applying the most recent edition of the Recommendations and Standards listed below. Members of IEC and ISO maintain registers of currently valid International standards. The Telecommunication Standardization Bureau of the ITU maintains a list of currently valid ITU-T Recommendations.

2.1 Identical Recommendations | International Standards

- ITU-T Recommendation X.200 (1994) | ISO/IEC 7498-1:1994, *Information technology – Open Systems Interconnection – Basic Reference Model: The Basic Model*.
- ITU-T Recommendation X.211 (1995) | ISO/IEC 10022:1996, *Information technology – Open Systems Interconnection – Physical service definition*.
- ITU-T Recommendation X.701 (1997) | ISO/IEC 10040:1998, *Information technology – Open Systems Interconnection – Systems management overview*.
- ITU-T Recommendation X.710 (1997) | ISO/IEC 9595:1998, *Information technology – Open Systems Interconnection – Common management information service definition.*
- ITU-T Recommendation X.711 (1997) | ISO/IEC 9596-1:1998, *Information technology – Open Systems Interconnection – Common management information protocol: Specification.*
- CCITT Recommendation X.720 (1992) | ISO/IEC 10165-1:1993, *Information technology – Open Systems Interconnection – Structure of management information: Management information model.*
- CCITT Recommendation X.721 (1992) | ISO/IEC 10165-2:1992, *Information technology – Open Systems Interconnection – Structure of management information: Definition of management information.*
- CCITT Recommendation X.722 (1992) | ISO/IEC 10165-4:1992, *Information technology – Open Systems Interconnection – Structure of management information: Guidelines for the definition of managed objects*.

No reproduction or networking permitted without license from IHS

Provided by IHS under license with ISO
Copyright International Organization for Standardization
Not for Resale

- ITU-T Recommendation X.723 (1993) | ISO/IEC 10165-5:1994, *Information technology – Open Systems Interconnection – Structure of management information: Generic management information*.
- CCITT Recommendation X.730 (1992) | ISO/IEC 10164-1:1993, *Information technology – Open Systems Interconnection – Systems management: Object management function*.
- CCITT Recommendation X.731 (1992) | ISO/IEC 10164-2:1993, *Information technology – Open Systems Interconnection – Systems management: State management function.*
- CCITT Recommendation X.732 (1992) | ISO/IEC 10164-3:1993, *Information technology – Open Systems Interconnection – Systems management: Attributes for representing relationships.*
- CCITT Recommendation X.733 (1992) | ISO/IEC 10164-4:1992, *Information technology – Open Systems Interconnection – Systems management: Alarm reporting function*.
- CCITT Recommendation X.734 (1992) | ISO/IEC 10164-5:1993, *Information technology – Open Systems Interconnection – Systems management: Event report management function*.
- CCITT Recommendation X.735 (1992) | ISO/IEC 10164-6:1993, *Information technology – Open Systems Interconnection – Systems management: Log control function.*

2.2 Paired Recommendations | International Standards equivalent in technical content

- CCITT Recommendation X.208 (1988), *Specification of Abstract Syntax Notation One (ASN.1)*.

  ISO/IEC 8824:1990, *Information technology – Open Systems Interconnection – Specification of Abstract Syntax Notation One (ASN.1).*
- CCITT Recommendation X.700 (1992), *Management framework for Open Systems Interconnections (OSI) for CCITT applications*.

  ISO/IEC 7498-4:1989, *Information processing systems – Open Systems Interconnection – Basic Reference Model – Part 4: Management framework.*

3 Definitions

For the purposes of this Recommendation | International Standard, the following definitions apply.

3.1 Basic Reference Model definitions

This Recommendation | International Standard is based on the concept in the Basic Reference Model for Open Systems Interconnection and makes use of the following terms defined in ITU-T Rec. X.200 | ISO/IEC 7498-1:

a) data-circuit;

b) (N)-connection;

c) (N)-entity;

d) (N)-layer;

e) (N)-protocol;

f) (N)-service-access-point;

g) open system;

h) Physical Layer;

i) systems management.

3.2 Management framework definitions

This Recommendation | International Standard makes use of the following term defined in CCITT Rec. X.700 | ISO/IEC 7498-4:

- managed object.

Provided by IHS under license with ISO
Copyright International Organization for Standardization
Not for Resale

3.3 Systems management overview definitions

This Recommendation | International Standard makes use of the following terms defined in CCITT Rec. X.701 | ISO/IEC 10040:

a) managed object class;

b) management information;

c) notification;

d) (systems management) operation.

3.4 Common management information service definitions

This Recommendation | International Standard makes use of the following term defined in ITU-T Rec. X.710 | ISO/IEC 9595:

– attributes.

3.5 Management information model definitions

This Recommendation | International Standard makes use of the following terms defined in CCITT Rec. X.720 | ISO/IEC 10165-1:

a) action;

b) attribute group;

c) attribute Type;

d) behaviour;

e) containment;

f) distinguished name;

g) inheritance;

h) name binding;

i) package;

j) parameter;

k) relative distinguished name;

l) subclass;

m) superclass.

3.6 GDMO definitions

This Recommendation | International Standard makes use of the following terms defined in CCITT Rec. X.722 | ISO/IEC 10165-4:

a) managed object class definition;

b) template.

4 Symbols and abbreviations

Within the Managed Object definitions and GDMO templates the following abbreviations are used in the standard-name element of a document-identifier when making references to other documents:

DMI CCITT Rec. X.721 (1992) | ISO/IEC 10165-2:1992

GMI ITU-T Rec. X.723 (1993) | ISO/IEC 10165-5:1994

This Recommendation | International Standard makes use of the following symbols and abbreviations:

DMI Definition of Management Information

GDMO Guidelines for the Definition of Managed Objects

MO Managed Object(s)

Ph Physical

PhC Physical Connection

Provided by IHS under license with ISO
Copyright International Organization for Standardization
Not for Resale

PHLM	Physical Layer Management
PhSAP	Physical Service Access Point
QoS	Quality of Service
SAP	Service Access Point

5 Elements of Physical Layer Management Information

5.1 Managed Object Hierarchy

5.1.1 Summary of managed objects

The following set of common managed objects are defined in this Recommendation | International Standard for the OSI Physical Layer:

a) The Physical Subsystem Managed Object (see 5.3)

b) The Physical Entity Managed Object (see 5.4)

c) The Physical SAP Managed Object (see 5.5)

d) The Data-circuit Managed Object (see 5.6)

e) The Physical Connection Managed Object (see 5.7)

These Managed Objects represent OSI Management's view of those elements of an Open System which support the OSI Physical Service subject to OSI management operations. Other MOs may be defined under Physical Subsystem using these generic specifications.

5.1.2 Containment hierarchy

The containment hierarchy is illustrated in Figure 1. These objects are defined in detail in the following subclauses.

The physical subsystem MO is subordinate to the system MO and it represents the whole of the physical layer in an open system. Only one instance of the physical subsystem MO exists in an open system. One or more physical entity MO and physical SAP MO are contained in the physical subsystem MO. The physical entity MO represents the whole of the management aspect of the entity that executes the functions of the physical layer. The plural instances of the physical entity MO can exist in an open system. The data-circuit MO is generic managed object that represents the management aspect of the entity that executes the transmission of bits. The physical connection MO represents the management view of connections established using relaying functions.

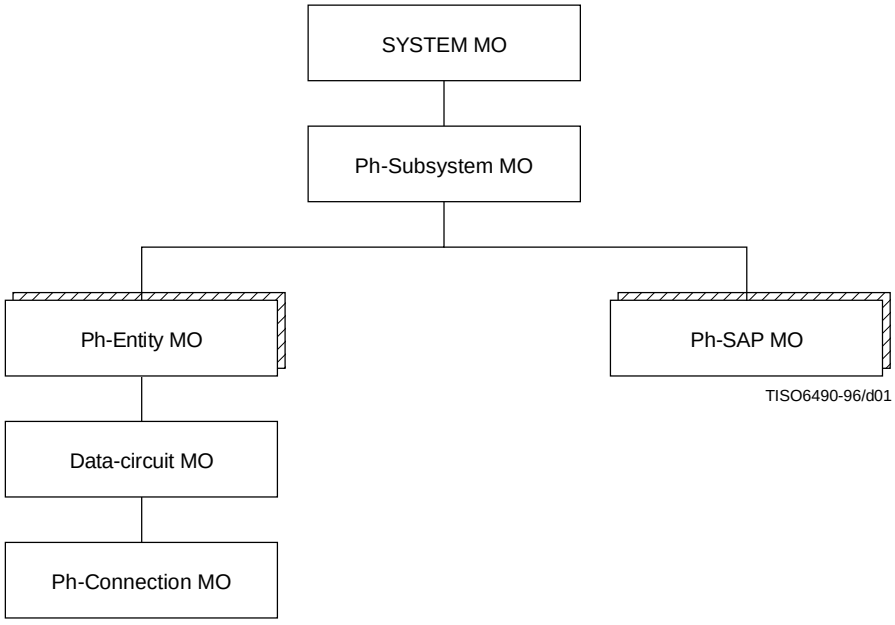

Figure 1 – Physical Layer Containment Hierarchy

--`,,```,,,,````-`-`,,`,,`,`,,`---

Provided by IHS under license with ISO
Copyright International Organization for Standardization
Not for Resale

5.1.3 Relationships

5.1.3.1 General

The use of Relationship attributes is illustrated by examples in Annex C. The following describes the individual relationship in more detail.

5.1.3.2 Physical entity

The physical entity MO has a localSapName attribute inherited from GMI:communicationsEntity. This attribute contains the local distinguished name(s) of SAP MO(s), representing the point at which services are provided to the entity.

5.1.3.3 SAP

There is a relationship between the physical SAP MO and the managed objects that represent the Data Link user entities that are using the SAP. This is represented by the userEntityNames attribute inherited from GMI:sap1.

5.1.3.4 Connections

There is a relationship between the physical connection MO and the managed objects that represents the Data Link connections.

5.1.4 Minimum Event Filtering Capabilities

The physical layer management definitions embodied in this Recommendation | International Standard imply the frequent, and possibly excessive generation of notifications during regular layer operation. These notifications are especially useful for effective fault management, where they facilitate the tracing and pinpointing of error situations. To avoid the excessive dissemination of these event reports under normal operating conditions, it is advisable for a managed system to have, as a minimum, the capability to perform discrimination based upon:

a) the source managed object class;

b) the object identifier values in the probable cause and specific problems field of communication alarms.

5.1.5 Use of Optional Fields

Where reference is made in this Recommendation | International Standard to ASN.1 syntax defined in ITU-T Rec. X.723 | ISO/IEC 10165-5 or CCITT Rec. X.721 | ISO/IEC 10165-2, only the following fields shall be employed:

a) Those which are not OPTIONAL in the ASN.1 syntax.

b) Those which are OPTIONAL, but whose use is explicitly required by this Recommendation | International Standard.

c) Those which are OPTIONAL, but whose ASN.1 type is SET OF ManagementExtension.

The use of any other field is prohibited.

5.2 Common Physical Layer GDMO definitions

-- *Behaviours*

commonCreationDeletion-B BEHAVIOUR
DEFINED AS
Managed object class imports the X.721 | ISO/IEC 10165-2 objectCreation and/or objectDeletion notifications. Used as follows:

objectCreation - Generated whenever an instance of the managed object class is created. Implementations may optionally include the sourceIndicator parameter in the notification.
If creation occurred as a result of internal operation of the resource, the value 'resourceOperation' is used. If creation occurred in response to a management operation, the value 'managementOperation' is used. A value of 'unknown' may be returned if it is not possible to determine the source of the operation. None of the other optional parameters are used.

objectDeletion - Generated whenever an instance of the managed object class is deleted. Implementations may optionally include the sourceIndicator parameter in the notification.
If deletion occurred as a result of internal operation of the resource, the value 'resourceOperation' is used. If deletion occurred in response to a management operation, the value 'managementOperation' is used. A value of 'unknown' may be returned if it is not possible to determine the source of the operation. None of the other optional parameters are used.;

--`,,```,,,,````-`-`,,`,,`,`,,`---

Provided by IHS under license with ISO
Copyright International Organization for Standardization
Not for Resale

commonDeactivateConnection-B BEHAVIOUR
DEFINED AS
Managed object class imports the X.723 | ISO/IEC 10165-5 deactivate action. The deactivate action causes the connection to be terminated. The termination should occur as rapidly as practical, but no particular time constraints are implied. Typically, this action simulates a disconnect request received across the service interface. If a more rapid means for terminating the connection exists, then this should be used. The termination shall occur in conformance to the protocol standard. The Managed Object remains in existence after completion of the deactivate action. It is subsequently deleted when the connection is terminated, in the same way as if the connection had been terminated by other means. A deactivate action may fail (with the ProcessingFailure response) if it is temporarily not possible to terminate the connection;

commonStateChange-B BEHAVIOUR
DEFINED AS
Managed object class imports the X.721 | ISO/IEC 10165-2 stateChange notification. Used to report the changes to the operationalState attribute, and where present, the administrativeState attribute. A single parameter set is included in the State change definition field. Only the (mandatory) attributeId and (optional) newAttributeValue parameters are used;

communicationsAlarm-B BEHAVIOUR
DEFINED AS
Managed object class imports the X.721 | ISO/IEC 10165-2 communicationsAlarm notification. Used to report the alarm principally associated with procedures and/or processes required to convey information from one point to another.
The probableCause parameter is set to the value lossOfSignal.
The perceivedSeverity parameter is set to the value Critical.;

equipmentAlarm-B BEHAVIOUR
DEFINED AS
Managed object class imports the X.721 | ISO/IEC 10165-2 equipmentAlarm notification. Used to report the alarm principally associated with an equipment fault.
The probableCause parameter is set to the value datasetOrModemError.
The perceivedSeverity parameter is set to the value Major.;

qualityofServiceAlarm-B BEHAVIOUR
DEFINED AS
Managed object class imports the X.721 | ISO/IEC 10165-2 qualityofServiceAlarm notification. Used to report the alarm principally associated with a degradation in the quality of a service.
The probableCause parameter is set to the value thresholdCrossed.
The perceivedSeverity parameter is set to the value Warning.;

5.3 The Physical Layer Subsystem Managed Object

-- There shall be exactly one of these managed objects within a system.
-- It exists to provide a container for all managed objects in a system
-- that relate to the operation of the Physical layer.

-- The physicalSubsystem managed object cannot be created or deleted
-- explicitly by management operation. It exists inherently in a system;
-- created and deleted as part of system operation.

physicalSubsystem MANAGED OBJECT CLASS
DERIVED FROM "GMI":subsystem;
-- which is derived from "DMI":top
CHARACTERIZED BY physicalSubsystem-P PACKAGE
ATTRIBUTES
"GMI":subsystemId
INITIAL VALUE PhLM.physicalSubsystemId-Value
GET;;;
REGISTERED AS {PHLM.moi physicalSubsystem(1)};

Provided by IHS under license with ISO
Copyright International Organization for Standardization
Not for Resale

```
-- Name Bindings

physicalSubsystem-system     NAME BINDING
 SUBORDINATE OBJECT CLASS physicalSubsystem AND SUBCLASSES;
          NAMED BY
          SUPERIOR OBJECT CLASS "DMI":system AND SUBCLASSES;
          WITH ATTRIBUTE "GMI":subsystemId;
REGISTERED AS {PHLM.nboi physicalSubsystem-system(1)};
```

5.4 Physical Entity Managed Object

```
-- There may be multiple instances of these MOs within a system.
-- These managed objects can not be created or deleted explicitly by
-- management operation.  They exist inherently in a system;
-- created and deleted as part of system operation.

physicalEntity          MANAGED OBJECT CLASS
DERIVED FROM "GMI":communicationsEntity;
CHARACTERIZED BY physicalEntity-P  PACKAGE
          ATTRIBUTES
          physicalEntityTitles REPLACE-WITH-DEFAULT  GET-REPLACE;
          ATTRIBUTE GROUPS
          "DMI":state
          "DMI":operationalState;
          NOTIFICATIONS
          "DMI":stateChange;;;
REGISTERED AS {PHLM.moi physicalEntity(2)};

-- Name Bindings
-- IMPORT"GMI":communicationsEntity-subsystem NAME BINDING

physicalEntity-physicalSubsystem-Management     NAME BINDING
SUBORDINATE OBJECT CLASS physicalEntity AND SUBCLASSES;
          NAMED BY
          SUPERIOR OBJECT CLASS physicalSubsystem AND SUBCLASSES;
          WITH ATTRIBUTE "GMI":communicationsEntityId;
REGISTERED AS {PHLM.nboi physicalEntity-physicalSubsystem(2)};

-- Attributes

physicalEntityTitles        ATTRIBUTE
WITH ATTRIBUTE SYNTAX PHLM.PhysicalEntityTitle;
MATCHES FOR EQUALITY;
          BEHAVIOUR  physicalEntityTitles-B  BEHAVIOUR
          DEFINED AS The set of Physical Entity Titles which unambiguously
          identify the Physical Entity in an End or Intermediate System.
          The value may be entered by a system management operation or
          it may be derived by some local means.;;
REGISTERED AS {PHLM.aoi physicalEntityTitles (1)};
```

5.5 Physical Service Access Point Managed Object

```
-- Physical SAP MO class is used to represent a service access point where the
-- interactions between the physical service user and the physical service
-- provider take place.
-- phSAP managed objects are created automatically as part of system
-- operation when a Physical layer user requests and is granted use
-- of the Physical layer services. The mechanism by which this happens
-- is system-specific and not subject to OSI standardization.

physicalSAP MANAGED OBJECT CLASS
DERIVED FROM "GMI":sap1;
REGISTERED AS {PHLM.moi physicalSAP(3)};
```


Provided by IHS under license with ISO
Copyright International Organization for Standardization
Not for Resale

```
-- Name Bindings
-- IMPORT "GMI":sap1-Subsystem NAME BINDING

physicalSAP-physicalSubsystem      NAME BINDING
SUBORDINATE OBJECT CLASS physicalSAP AND SUBCLASSES;
        NAMED BY
        SUPERIOR OBJECT CLASS physicalSubsystem AND SUBCLASSES;
        WITH ATTRIBUTE "GMI":sapId;
        BEHAVIOUR  physicalSAP-physicalSubsystem-Management-B BEHAVIOUR
        DEFINED AS
        The name binding which applies when a phSAP managed object (or an
        instance of a subclass of the phSAP MO class) can be created by
        management as a subordinate object of a phEntity managed object
        (or subclass), and deleted by management.;;
        CREATE;
        DELETE ONLY-IF-NO-CONTAINED-OBJECTS;
REGISTERED AS {PHLM.nboi phSAP-physicalSubsystem(3)};
```

5.6 Data-circuit Managed Object

```
-- The data-circuit managed object class is used to represent a communication
-- path in the physical media for OSI between two physical-entities,
-- together with the facilities necessary in the Physical Layer for the
-- transmission of bits on it.

dataCircuit      MANAGED OBJECT CLASS
DERIVED FROM "GMI":coProtocolMachine;
CHARACTERIZED BY dataCircuit-P  PACKAGE

        BEHAVIOUR
        commonCreationDeletion-B,
        commonStateChange-B;

        ATTRIBUTES
        bitErrorsReceived           GET,
        bitErrorsTransmitted        GET,
        bitErrorsThreshold          GET-REPLACE,
        dataCircuitType             GET,
        physicalMediaNames          GET,
        physicalInterfaceType       GET,
        physicalInterfaceStandard   GET,
        synchronizationMode         GET,
        -- sync, async --
        transmissionCoding          GET,
        -- coding scheme --
        transmissionMode            GET,
        -- FDX, HDX, simplex, duplex --
        transmissionRate            GET;

        ATTRIBUTE GROUPS
        "GMI":counters
              bitErrorsReceived
              bitErrorsTransmitted,
        "DMI":state
              "DMI":operationalState;

        NOTIFICATIONS
        "DMI":communicationsAlarm
              connectionError
              lossOfSignal
              lossOfSynchronization,
        "GMI":communicationsInformation
              connectionEstablished,
        "DMI":equipmentAlarm,
        "DMI":objectCreation,
        "DMI":objectDeletion,
        "DMI":qualityofServiceAlarm
              bitErrorThresholdReached,
        "DMI":stateChange;
;;
REGISTERED AS {PHLM.moi dataCircuit(4)};
```


Provided by IHS under license with ISO
Copyright International Organization for Standardization
Not for Resale

-- Name Bindings

```
dataCircuit-physicalEntity    NAME BINDING
SUBORDINATE OBJECT CLASS dataCircuit AND SUBCLASSES;
        NAMED BY
        SUPERIOR OBJECT CLASS physicalEntity AND SUBCLASSES;
        WITH ATTRIBUTE "GMI":coProtocolMachineId;
        BEHAVIOUR dataCircuit-physicalEntity-B BEHAVIOUR
        DEFINED AS
        The name binding which applies when a dataCircuit managed object
        can be created by management as a subordinate object of  a
        physicalEntity managed object and deleted by management.;;
        DELETE ONLY-IF-NO-CONTAINED-OBJECTS;
REGISTERED AS {PHLM.nboi dataCircuit-physicalEntity(4)};
```

-- Attributes

```
bitErrorsReceived          ATTRIBUTE
WITH ATTRIBUTE SYNTAX PHLM.BitErrors;
MATCHES FOR EQUALITY;
        BEHAVIOUR bitErrorsReceived-B BEHAVIOUR
        DEFINED AS
        The number of bit errors received.;;
REGISTERED AS {PHLM.aoi bitErrorsReceived(13)};

bitErrorsTransmitted      ATTRIBUTE
WITH ATTRIBUTE SYNTAX PHLM.BitErrors;
MATCHES FOR EQUALITY;
        BEHAVIOUR bitErrorsTransmitted-B BEHAVIOUR
        DEFINED AS
        The number of bit errors transmitted.;;
REGISTERED AS {PHLM.aoi bitErrorsTransmitted(14)};

bitErrorsThreshold         ATTRIBUTE
WITH ATTRIBUTE SYNTAX PHLM.BitErrorsThreshold;
MATCHES FOR EQUALITY;
        BEHAVIOUR bitErrorsThreshold-B BEHAVIOUR
        DEFINED AS
        Value of the threshold for bit Error.;;
REGISTERED AS {PHLM.aoi bitErrorsThreshold(2)};

dataCircuitType            ATTRIBUTE
WITH ATTRIBUTE SYNTAX PHLM.DataCircuitType;
MATCHES FOR EQUALITY;
        BEHAVIOUR dataCircuitType-B BEHAVIOUR
        DEFINED AS
        Determines the data-circuit supports the relaying functions.;;
REGISTERED AS {PHLM.aoi dataCircuitType(3)};

physicalInterfaceStandard    ATTRIBUTE
WITH ATTRIBUTE SYNTAX PHLM.PhysicalInterfaceStandard;
MATCHES FOR EQUALITY;
        BEHAVIOUR physicalInterfaceStandard-B BEHAVIOUR
        DEFINED AS
        Determines the Standard or Recommendation number/name that the
        interface comply to.;;
REGISTERED AS {PHLM.aoi physicalInterfaceStandard(4)};

physicalInterfaceType          ATTRIBUTE
WITH ATTRIBUTE SYNTAX PHLM.PhysicalInterfaceType;
MATCHES FOR EQUALITY;
        BEHAVIOUR physicalInterfaceType-B BEHAVIOUR
        DEFINED AS
        Determines the physical characteristics of the line/cable that
        the data-circuit supports. ;;
REGISTERED AS {PHLM.aoi physicalInterfaceType(5)};
```


Provided by IHS under license with ISO
Copyright International Organization for Standardization
Not for Resale

```
physicalMediaNames          ATTRIBUTE
WITH ATTRIBUTE SYNTAX PHLM.PhysicalMediaNames;
MATCHES FOR EQUALITY;
        BEHAVIOUR physicalMediaNames-B  BEHAVIOUR
        DEFINED AS  The distinguished names of physical media which the
        data-circuit uses.;;
REGISTERED AS {PHLM.aoi physicalMediaNames(6)};

synchronizationMode         ATTRIBUTE
WITH ATTRIBUTE SYNTAX PHLM.SynchronizationMode;
MATCHES FOR EQUALITY;
        BEHAVIOUR synchronizationMode-B BEHAVIOUR
        DEFINED AS
        Determines the mode of synchronization, such as synchronous and
        asynchronous.;;
REGISTERED AS {PHLM.aoi synchronizationMode(7)};

transmissionCoding          ATTRIBUTE
WITH ATTRIBUTE SYNTAX PHLM.TransmissionCoding;
MATCHES FOR EQUALITY;
        BEHAVIOUR transmissionCoding-B BEHAVIOUR
        DEFINED AS
        Coding rule of data transmission.;;
REGISTERED AS {PHLM.aoi transmissionCoding(8)};

transmissionMode        ATTRIBUTE
WITH ATTRIBUTE SYNTAX PHLM.TransmissionMode;
MATCHES FOR EQUALITY;
        BEHAVIOUR transmissionMode-B BEHAVIOUR
        DEFINED AS
        Determines the transmission mode.;;
REGISTERED AS {PHLM.aoi transmissionMode(9)};

transmissionRate            ATTRIBUTE
WITH ATTRIBUTE SYNTAX PHLM.TransmissionRate;
MATCHES FOR EQUALITY;
        BEHAVIOUR transmissionRate-B  BEHAVIOUR
        DEFINED AS
        Value of the transmission rate.;;
REGISTERED AS {PHLM.aoi transmissionRate(10)};
```

-- Parameters

```
bitErrorThresholdReached   PARAMETER
CONTEXT EVENT-INFO;
WITH SYNTAX PHLM.BitErrorThresholdReached;
        BEHAVIOUR
        bitErrorThresholdReached-B BEHAVIOUR
        DEFINED AS
        Indicates that bit error reached to the threshold value.;;
REGISTERED AS {PHLM.proi bitErrorThresholdReached(1)};

connectionError             PARAMETER
CONTEXT EVENT-INFO;
WITH SYNTAX PHLM.ConnectionError;
        BEHAVIOUR
        connectionError-B BEHAVIOUR
        DEFINED AS
        Indicates that connection error occurred.;;
REGISTERED AS {PHLM.proi connectionError(2)};

connectionEstablished       PARAMETER
CONTEXT EVENT-INFO;
WITH SYNTAX PHLM.ConnectionEstablished;
        BEHAVIOUR
        connectionEstablished-B BEHAVIOUR
        DEFINED AS
        Indicates that connection is established.;;
REGISTERED AS {PHLM.proi connectionEstablished(3)};
```

--`,,```,,,,````-`-`,,`,,`,`,,`---

Provided by IHS under license with ISO
Copyright International Organization for Standardization
Not for Resale

```
lossOfSignal            PARAMETER
CONTEXT EVENT-INFO;
WITH SYNTAX PHLM.LossOfSignal;
        BEHAVIOUR
        losOfSignal-B BEHAVIOUR
        DEFINED AS
        Indicates that loss of signal error occurred.;;
REGISTERED AS {PHLM.proi lossOfSignal(4)};

lossOfSynchronization   PARAMETER
CONTEXT EVENT-INFO;
WITH SYNTAX PHLM.LossOfSynchronization;
        BEHAVIOUR
        losOfSynchronization-B BEHAVIOUR
        DEFINED AS
        Indicates that loss of synchronization error occurred.;;
REGISTERED AS {PHLM.proi lossOfSynchronization(5)};
```

5.7 Physical Connection Managed Object

-- The Physical Connection managed Object class is used to represent an
-- interconnection of data-circuits in the Physical Layer.

```
physicalConnection      MANAGED OBJECT CLASS
DERIVED FROM "GMI":singlePeerConnection;
CHARACTERIZED BY phConnection-P PACKAGE
        BEHAVIOUR
        commonCreationDeletion-B,
        commonDeactivateConnection-B,
        commonStateChange-B;
        ATTRIBUTES
        "GMI":connectionId GET,
        endpointIdentifier GET,
        portNumber GET;
        ACTIONS
        "GMI":activate,
        "GMI":deactivate;;;
        NOTIFICATIONS
        "DMI":objectCreation,
        "DMI":objectDeletion,
        "DMI":stateChange;
REGISTERED AS {PHLM.moi physicalConnection(5)};
```

-- Name Bindings

```
physicalConnection-dataCircuit      NAME BINDING
SUBORDINATE OBJECT CLASS physicalConnection AND SUBCLASSES;
        NAMED BY
        SUPERIOR OBJECT CLASS dataCircuit AND SUBCLASSES;
        WITH ATTRIBUTE "GMI":connectionId;
        BEHAVIOUR physicalConnection-B BEHAVIOUR
        DEFINED AS
        The name bindings which applies when a phConnection managed object
        (or an instance of a subclass of the phConnection MO class) can be
        changed by management as a subordinate object of phProtocol managed
        object (or subclass), and deleted by management.;;
        DELETE ONLY-IF-NO-CONTAINED-OBJECTS;
REGISTERED AS {PHLM.nboi phConnection-dataCircuit(5)};
```

-- Attributes

```
endpointIdentifier      ATTRIBUTE
WITH ATTRIBUTE SYNTAX PHLM.EndpointIdentifier;
MATCHES FOR EQUALITY;
        BEHAVIOUR endpointIdentifier-B BEHAVIOUR
        DEFINED AS
        The naming attribute for the physical connection managed object.;;
REGISTERED AS {PHLM.aoi endpointIdentifier(11)};
```

Provided by IHS under license with ISO

Copyright International Organization for Standardization
Not for Resale

```
portNumber              ATTRIBUTE
WITH ATTRIBUTE SYNTAX PHLM.PortNumber;
MATCHES FOR EQUALITY;
        BEHAVIOUR portNumber-B  BEHAVIOUR
        DEFINED AS  The distinguished names of port which the
        connection is established.;;
REGISTERED AS {PHLM.aoi portNumber(12)};
```

6 ASN.1 Module

```
PHLM {joint-iso-itu-t physical-layer(18)management(0)asn1Module(2)0}
DEFINITIONS IMPLICIT TAGS ::= BEGIN

IMPORTS
        GroupObjects
        FROM Attribute-ASN1Module{joint-iso-itu-t ms(9)smi(3)part2(2)asn1Module(2)1}
        SetInfoStatus, AttributeId, ObjectInstance
        FROM CMIP-1{joint-iso-itu-t ms(9)cmip(1)modules(0)protocol(3)};

-- Object identifier definitions

physical-layer OBJECT IDENTIFIER ::= {joint-iso-itu-t physical-layer(18)}
phloi OBJECT IDENTIFIER ::= {physical-layer management(0)}

sseoi OBJECT IDENTIFIER ::= {phloi standardSpecificExtension(0)}
moi OBJECT IDENTIFIER ::= {phloi objectClass(3)}
poi OBJECT IDENTIFIER ::= {phloi package(4)}
proi OBJECT IDENTIFIER ::= {phloi parameter(5)}
nboi OBJECT IDENTIFIER ::= {phloi nameBinding(6)}
aoi OBJECT IDENTIFIER ::= {phloi attribute(7)}
agoi OBJECT IDENTIFIER ::= {phloi attributeGroup(8)}
acoi OBJECT IDENTIFIER ::= {phloi action(9)}
noi OBJECT IDENTIFIER ::= {phloi notification(10)}

-- Other definitions

physicalSubsystemId-Value GraphicString ::= "physicalSubsystem"
BitErrors ::= INTEGER
BitErrorsThreshold ::= SEQUENCE {
        mantissa [1] INTEGER,
        exponent [2] INTEGER }
DataCircuitType ::= ENUMERATED {
        end-system(0),
        relay-system(1)}
PhysicalEntityTitle ::= SET OF GraphicString
PhysicalInterfaceStandard ::= OCTET STRING
PhysicalInterfaceType ::= OCTET STRING
PhysicalMediaNames ::= OCTET STRING
SynchronizationMode ::= ENUMERATED {
        synchronous(0),
        asynchronous(1)}
TransmissionCoding ::= OCTET STRING
TransmissionMode ::= ENUMERATED {
        simplex(0),
        duplex(1)}
TransmissionRate ::= SEQUENCE {
        mantissa [1] INTEGER,
        exponent [2] INTEGER }
PortNumber ::= INTEGER
EndpointIdentifier ::= OCTET STRING
ConnectionError ::= OCTET STRING
ConnectionEstablished ::= OCTET STRING
BitErrorThresholdReached ::= OCTET STRING
LossOfSignal ::= OCTET STRING
LossOfSynchronization ::= OCTET STRING

END
```


Provided by IHS under license with ISO
Copyright International Organization for Standardization
Not for Resale

7 Conformance

7.1 Conformance requirements to this Recommendation | International Standard

An implementation for which conformance to this Recommendation | International Standard as a managed implementation is claimed shall:

a) support the physicalSubsystem MO;

b) for each supported MO, support at least on name binding defined in this Recommendation | International Standard, for which the MO is the subordinate;

c) for each supported MO, support all elements of management information as defined in GDMO description for the MO.

--`,,```,,,,````-`-`,,`,,`,`,,`---

Provided by IHS under license with ISO
Copyright International Organization for Standardization
Not for Resale

Annex A

Allocation of Object Identifiers

(This annex forms an integral part of this Recommendation | International Standard)

The following Object Identifiers have been allocated by the normative body of this Recommendation | International Standard. Object Identifiers which had been allocated when this Recommendation | International Standard was at the draft stage will not be re-allocated. If any modification, other than a change to the behaviour clause, is made to any template which has been allocated an object identifier, the new template will be allocated a new Object Identifier and the old Object Identifier will not be re-used.

joint-iso-itu
ms (9)
smi (3)
part2 (2)
asn1Module (2)
(1)
physical-layer (18)
management (0)
standardSpecificExtension (0)
asn1Module (2)
(0)
managedObjectClass (3)
physicalSubsystem (1)
physicalEntity (2)
physicalSAP (3)
dataCircuit (4)
physicalConnection (5)
package (4)
parameters (5)
bitErrorThresholdReached (1)
connectionError (2)
connectionEstablished (3)
lossOfSignal (4)
lossOfSynchronization (5)
nameBinding (6)
physicalSubsystem-system (1)
physicalEntity-physicalSubsystem (2)
physicalSAP-physicalSubsystem (3)
dataCircuit-physicalEntity (4)
phConnection-dataCircuit (5)
attribute (7)
physicalEntityTitles (1)
bitErrorsThreshold (2)
dataCircuitType (3)
physicalInterfaceStandard (4)
physicalInterfaceType (5)
physicalMediaNames (6)
synchronizationMode (7)
transmissionCoding (8)
transmissionMode (9)
transmissionRate (10)
endpointIdentifier (11)
portNumber (12)
attributeGroup (8)
action (9)
notification (10)

Provided by IHS under license with ISO
Copyright International Organization for Standardization
Not for Resale

Annex B

Shorthand description of Managed Objects

(This annex does not form an integral part of this Recommendation | International Standard)

The information in this annex is intended only to give a broad outline of the Physical Layer Management Specification. While the information contained herein has been derived from the GDMO text in this Recommendation | International Standard, it should be treated with caution, as there may be errors.

The following abbreviations are used to describe the property lists of attributes:

G Get;

R Replace;

RWD Replace With Default;

A Add;

RM Remove.

The following abbreviations are used for external label references:

DMI: CCITT Rec. X.721 (1992) | ISO/IEC 10165-2:1992

GMI: ITU-T Rec. X.723 (1993) | ISO/IEC 10165-5:1994

The inheritance hierarchy is illustrated in Figure B.1.

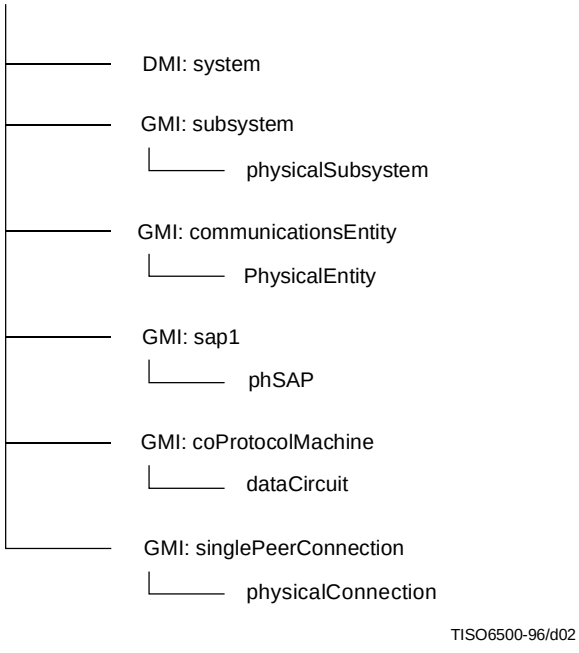

Figure B.1 – Physical Layer Inheritance Hierarchy

MANAGED OBJECT CLASS physicalSubsystem DERIVED FROM (GMI:subsystem) CONTAINED IN (DMI:system)
GMI:subsystemId ATTRIBUTE (G)
END MANAGED OBJECT CLASS physicalSubsystem

MANAGED OBJECT CLASS physicalEntity DERIVED FROM (GMI:communicationsEntity) CONTAINED IN (physicalSubsystem)
DMI: stateChange NOTIFICATION
physicalEntityTitles ATTRIBUTE (G, R, RWD)
The distinguished names of physical entity managed objects.
END MANAGED OBJECT CLASS physicalEntity

MANAGED OBJECT CLASS physicalSAP DERIVED FROM (GMI:sap1) CONTAINED IN (physicalSubsystem)
END MANAGED OBJECT CLASS physicalSAP

Provided by IHS under license with ISO
Copyright International Organization for Standardization
Not for Resale
No reproduction or networking permitted without license from IHS

MANAGED OBJECT CLASS dataCircuit DERIVED FROM (GMI:coProtocolMachine) CONTAINED IN (physicalEntity)

DMI:communicationAlarm NOTIFICATIONS
DMI:communicationInformation NOTIFICATIONS
DMI:equipmentAlarm NOTIFICATIONS
DMI:objectCreation NOTIFICATIONS
DMI:objectDeletion NOTIFICATIONS
DMI:qualityofServiceAlarm NOTIFICATIONS
DMI:stateChange NOTIFICATIONS
bitErrorThreshold ATTRIBUTE (G, R)
Value of the threshold for bit error
dataCircuitType ATTRIBUTE (G)
Determines the data-circuit supports the relaying functions
physicalInterfaceStandard ATTRIBUTE (G)
The name of the Recommendation or International Standard that the interface complies to
physicalInterfaceType ATTRIBUTE (G)
The physical characteristics of the line/cable that the data circuit supports
physicalMediaNames ATTRIBUTE (G)
The name of the physical media that the data circuit is attached to
synchronizationMode ATTRIBUTE (G)
The type of synchronization
transmissionCoding ATTRIBUTE (G)
The coding rule of the data transmission
transmissionMode ATTRIBUTE (G)
Mode of transmission
transmissionRate ATTRIBUTE (G)
Value of the transmission rate

END MANAGED OBJECT CLASS dataCircuit

MANAGED OBJECT CLASS physicalConnection DERIVED FROM (GMI:singlePeerConnection) CONTAINED IN (dataCircuit)

DMI:objectCreation NOTIFICATION
DMI:objectDeletion NOTIFICATION
DMI:stateChange NOTIFICATION
GMI:activate ACTION
GMI:connectionId ATTRIBUTE (G)
GMI:deactivate ACTION
endpointIdentifier ATTRIBUTE (G)
Name of the physical connection
portNumber ATTRIBUTE (G)
Name of the port that the connection is established

END MANAGED OBJECT CLASS physicalConnection

--`,,```,,,,````-`-`,,`,,`,`,,`---

Provided by IHS under license with ISO
Copyright International Organization for Standardization
Not for Resale

Annex C

Example of the use of relationship attributes

(This annex does not form an integral part of this Recommendation | International Standard)

This annex provides examples of the use of relationship attributes, both within the Physical Layer and also between the adjoining layer. This example is not intended to be exhaustive. Relationships for other protocol combinations may be constructed in a similar manner, and a particular implementation may be capable of supporting multiple protocols simultaneously (see Figure C.1).

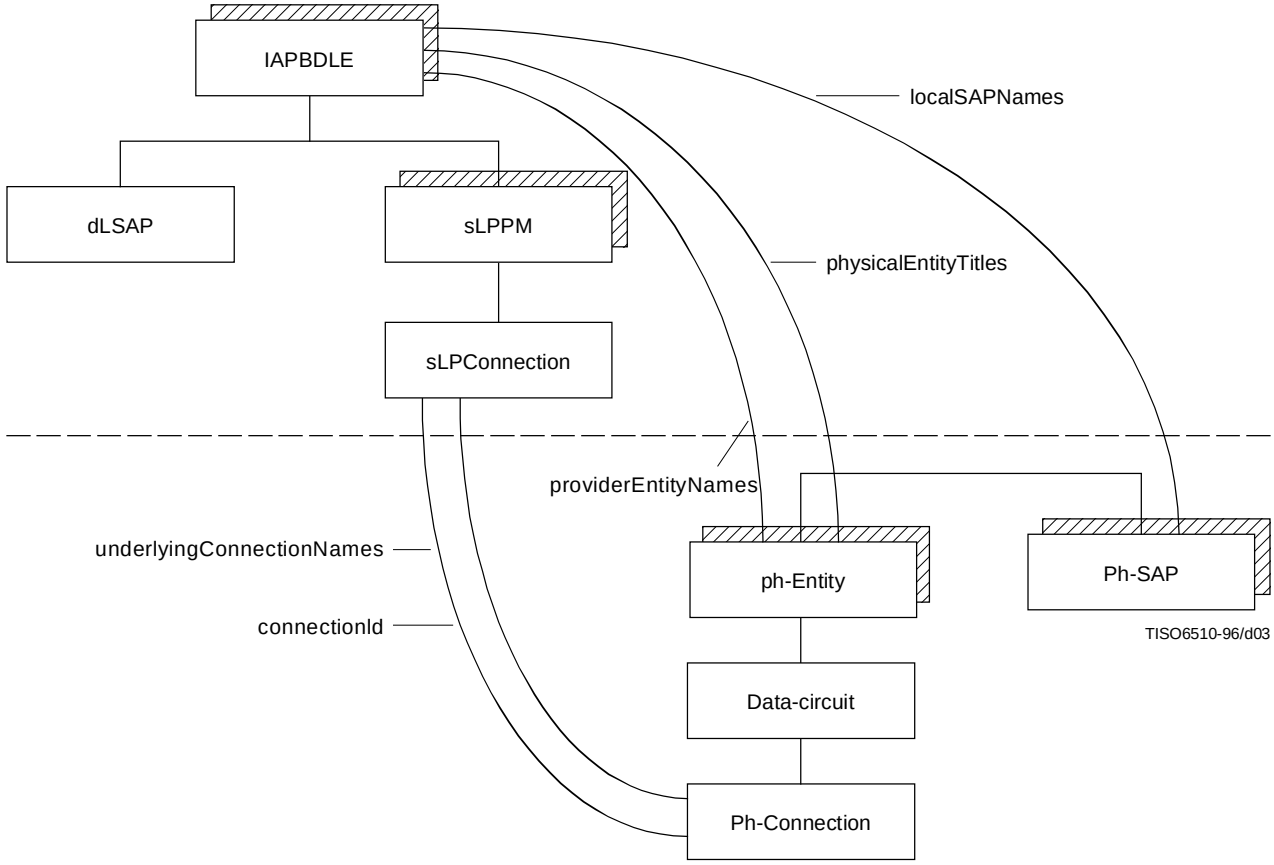

Figure C.1 – Example of relationships

--`,,```,,,,````-`-`,,`,,`,`,,`---

Provided by IHS under license with ISO
Copyright International Organization for Standardization
Not for Resale

ICS 35.100.10

Price based on 17 pages

© ISO/IEC 1999 – All rights reserved

Provided by IHS under license with ISO

Copyright International Organization for Standardization
Not for Resale