INTERNATIONAL STANDARD

ISO/IEC 13614

First edition
1995-12-15

Information technology — Interchange on 300 mm optical disk cartridges of the write once, read multiple (WORM) type using the SSF method

Technologies de l'information — Échange sur cartouches de disque optique de 300 mm *de diamètre du type écriture unique-lecture multiple (WORM) utilisant la méthode SSF*

Reference number
ISO/IEC 13614:1995(E)

Copyright International Organization for Standardization
Provided by IHS under license with ISO
No reproduction or networking permitted without license from IHS

Not for Resale

Contents

Page

Foreword ix

Section 1 - General 1

1 Scope 1

2 Conformance 1

3 Normative references 1

4 Definition 2

4.1 case 2

4.2 clamping zone 2

4.3 Control Track 2

4.4 Cyclic Redundancy Check 2

4.5 defects management 2

4.6 Disk Reference Plane 2

4.7 entrance surface 2

4.8 Error Correction Code (ECC) 2

4.9 format 2

4.10 Frame 2

4.11 holding feature 2

4.12 interleaving 3

4.13 mark 3

4.14 optical disk 3

4.15 optical disk cartridge 3

4.16 recording layer 3

4.17 Reed-Solomon code 3

4.18 sector 3

4.19 space 3

4.20 spindle 3

© ISO/IEC 1995

All rights reserved. Unless otherwise specified, no part of this publication may be reproduced or utilized in any form or by any means, electronic or mechanical, including photocopying and microfilm, without permission in writing from the publisher.

ISO/IEC Copyright Office • Case postale 56 • CH-1211 Genève 20 • Switzerland

Printed in Switzerland

Copyright International Organization for Standardization
Provided by IHS under license with ISO
No reproduction or networking permitted without license from IHS
Not for Resale

4.21 substrate 3
4.22 track 3
4.23 track pitch 3
4.24 WORM disk 3
4.25 Zone 3
5 Conventions 4
5.1 Representation of numbers 4
5.2 Names 4
6 Acronyms 4
7 General description of the optical disk cartridge 5
8 General requirements 5
8.1 Environments 5
8.1.1 Testing environment 5
8.1.2 Operating environment 5
8.1.3 Storage environement 6
8.1.4 Transportation 6
8.2 Safety requirements 6
8.3 Flammability 6
9 Reference drive 7
9.1 Optical system 7
9.2 Optical beam 7
9.3 Read channels 8
9.4 Tracking 8
9.5 Rotation of the disk 8
Section 2 - Mechanical and physical characteristics 10
10 Dimensional and physical characteristics of the case 10
10.1 General description of the case 10
10.2 Reference planes of the case 10
10.3 Dimensions of the case 10
10.3.1 Overall dimensions 10
10.3.2 Location hole 11
10.3.3 Alignment hole 12
10.3.4 Reference surfaces 12
10.3.5 Detents 13
10.3.6 Write-inhibit feature 14
10.3.7 Head and spindle access windows 14
10.3.8 Shutter, shutter openers and mis-insert protection feature 15

Copyright International Organization for Standardization
Provided by IHS under license with ISO
No reproduction or networking permitted without license from IHS Not for Resale

10.3.8.1	Shutter	15
10.3.8.2	Side shutter opener feature	15
10.3.8.3	Front shutter opener feature	16
10.3.8.4	Mis-insert protection feature	16
10.3.9	Loading grooves	16
10.3.10	Sensor holes	16
10.3.11	Gripper features	17
10.3.11.1	Gripper slots	17
10.3.11.2	Gripper holes	18
10.3.12	Label area	19
10.4	Mechanical characteristics	20
10.4.1	Material	20
10.4.2	Mass	20
10.4.3	Distortion	20
10.4.4	Compliance	20
10.4.5	Shutter opening force	20
11	Dimensional, mechanical and physical characteristics of the disk	20
11.1	General description of the disk	20
11.2	Reference axis and plane of the disk	21
11.3	Dimensions of the disk	21
11.3.1.	Centre zone	21
11.3.2.	Clamping zone	22
11.3.3.	Transition zone	22
11.3.4	Information zone	22
11.3.5	Rim zone	22
11.4	Mechanical characteristics	22
11.4.1	Material	22
11.4.2	Mass	22
11.4.3	Moment of inertia	22
11.4.4	Imbalance	23
11.4.5	Axial defection	23
11.4.6	Axial acceleration	23
11.4.7	Radial runout	23
11.4.8	Radial acceleration	24
11.4.9	Tilt	24
11.5	Optical characteristics	24
11.5.1	Index of refraction	24

Copyright International Organization for Standardization
Provided by IHS under license with ISO
No reproduction or networking permitted without license from IHS
Not for Resale

11.5.2 Thickness of the substrate 24
11.5.3 Birefringence 24
11.5.4 Reflectance 25
12 Interface between cartridge and drive 25
12.1 Clamping method 25
12.2 Hub 25
12.3 Clamping force 26
12.4 Capture cylinder 26
12.5 Disk position in operation condition 27
Section 3 - Format of information 41
13 Track geometry 41
13.1 Track shape 41
13.2 Direction of rotation 41
13.3 Track pitch 41
13.4 Track number 41
14 Track format 42
14.1 Track layout 42
14.2 Direction of rotation 42
14.3 Sector number 43
15 Frame and sector format 43
15.1 Frame format 43
15.1.1 Servo-and-address field 43
15.1.1.1 Address field 43
15.1.1.2 Servo field 45
15.1.2 Data area 46
15.1.2.1 Gaps 46
15.1.2.2 Starting pattern 46
15.1.2.3 Closure pattern 46
15.1.2.4 Data 47
15.1.3 Physical representation of the marks 47
15.2 Sector format 48
15.2.1 Gaps 49
15.2.2 Laser Power Test field 49
15.2.3 VFO field 49
15.2.4 Data field 49
16 Recording 49
17 Format of the information zone 50
17.1 General description of the information zone 50

Copyright International Organization for Standardization
Provided by IHS under license with ISO
No reproduction or networking permitted without license from IHS Not for Resale

17.2 Division of the information zone 50
17.2.1 PEP control zone 51
17.2.2 System zone 52
17.2.3 Test zones 52
17.2.4 SFP control zones 52
17.2.5 Data zone 53
17.2.6 Buffer zone 53
18 Format of the data zone 53
19 Defect management 53
19.1 Hash code replacement algorithm 53
19.2 Write procedure 53
Section 4 - Characteristics of embossed pre-formatted information 54
20 Method of testing 54
20.1 Environment 54
20.2 Reference drive 54
20.2.1 Optics and mechanics 54
20.2.2 Read power 54
20.2.3 Read channel 55
20.2.4 Tracking 55
20.3 Definition of signals 55
21 Signals from grooves 56
21.1 Phase depth 56
21.2 Track location 56
22 Signals from servo-and-address fields 57
23 Signals from embossed data fields 57
24 Signals from PEP control zone 57
Section 5 - Characteristics of the recording layer 58
25 Method of testing 58
25.1 Environment 59
25.2 Reference drive 59
25.2.1. Optics and mechanics 59
25.2.2 Read power 59
25.2.3 Read power 59
25.2.4 Tracking 59
25.3 Write conditions 59
25.3.1 Write pulse 59
25.4 Definition of signals 60
26 Optical characteristics 60

Copyright International Organization for Standardization
Provided by IHS under license with ISO
No reproduction or networking permitted without license from IHS
Not for Resale

26.1 Baseline reflectivity 60
26.2 Uniformity of reflectivity 61
27 Read and write characteristics 61
27.1 Sensitivity of the recording layer 61
27.1.1 Optical conditions 61
27.1.2 Write power and writing conditions 61
27.1.3 Characteristics of the written marks 61
27.1.4 Definition and measurement conditions 62
27.2 Read characteristics 62
27.2.1 Optical conditions 62
27.2.2 Read power 63
27.2.3 Reflectivity characteristics 63
27.2.4 Carrier-to-noise ratio 63
27.2.5 Cross-talk 64
27.2.6 Environment 64
Section 6 - Characteristics of user data 65
28 Method of testing 65
28.1 Environment 65
28.2 Reference drive 65
28.2.1 Optics and mechanics 66
28.2.2 Read power 66
28.2.3 Read amplifiers 66
28.2.4 Analog-to-binary converters 66
28.2.5 Data clock 66
28.2.6 Binary-to-digital conversion 66
28.2.7 Error correction 66
28.2.8 Tracking 66
29 Minimum quality of a sector 67
29.1 User-written data 67
30 Data interchange requirements 67
30.1 Tracking 67
30.2 User-written data 67
30.3 Quality of disk 67

Annexes

A Distortion test 68
B Compliance test 70
C Track deviation measurement 72
D Replacement algorithm 77

Copyright International Organization for Standardization
Provided by IHS under license with ISO
No reproduction or networking permitted without license from IHS Not for Resale

E Interleave and ECC of the data fields of a sector 79
F PEP control zone..... 82
G Control data of the SFP 87
H Guidelines on sector replacement 97
J Test method for the holding characteristics of the disk..... 98
K Derivation of the operating climatic environment for the ODC 100
L Description of the office environment 104
M Transportation guideline 105

--`,,```,,,,````-`-`,,`,,`,`,,`---

Copyright International Organization for Standardization
Provided by IHS under license with ISO
No reproduction or networking permitted without license from IHS
Not for Resale

Foreword

ISO (the International Organization for Standardization) and IEC (the International Electrotechnical Commission) form the specialized system for worldwide standardization. National bodies that are members of ISO or IEC participate in the development of International Standards through technical committees established by the respective organization to deal with particular fields of technical activity. ISO and IEC technical committees collaborate in fields of mutual interest. Other international organizations, governmental and non-governmental, in liaison with ISO and IEC, also take part in the work.

In the field of information technology, ISO and IEC have established a joint technical committee, ISO/IEC JTC 1. Draft International Standards adopted by the joint technical committee are circulated to national bodies for voting. Publication as an International Standard requires approval by at least 75 % of the national bodies casting a vote.

International Standard ISO/IEC 13614 was prepared by Joint Technical Committee ISO/IEC JTC 1, *Information technology*, Subcommittee SC 23, *Optical disk cartridges for information interchange*.

Annexes A to G and J form an integral part of this International Standard. Annexes H and K to M are for information only.

Copyright International Organization for Standardization
Provided by IHS under license with ISO
No reproduction or networking permitted without license from IHS Not for Resale

Information technology - Interchange on 300 mm optical disk cartdriges of the write once, read multiple (WORM) type using the SSF method

Section 1: General

1 Scope

This International Standard specifies the characteristics of 300 mm optical disk cartridges (ODC) of the WORM type providing for embossed information and for data to be written once and read multiple times.

It specifies

- the conditions for conformance testing and the reference drive;
- the mechanical and physical characteristics of the cartridge, so as to provide mechanical interchangeability between data processing systems;
- the format of the information on the disk, both embossed and user-written;
- the characteristics of the embossed information on the disk;
- the optical characteristics of the disk, enabling processing systems to write data onto the disk;
- the minimum quality of user-written data on the disk, enabling data processing systems to read data from the disk.

Together with the standard for Volume and File Structure, this International Standard provides for full data interchange between data processing systems. Interchange involves the ability to write and read data without introducing any error.

2 Conformance

A 300 mm optical disk cartridge is in conformance with this International Standard if it meets all mandatory requirements specified herein.

A drive claiming conformance with this International Standard shall be able, in the operating environment, to write on any optical disk cartridge which is in conformance with this Standard and to read any such optical disk cartridge which has been written with any drive in conformance with this International Standard.

A drive shall not claim conformance if it cannot accept the full range of media conforming to the Standard.

3 Normative references

The following standards contain provisions, which in reference with this text, constitute provisions of this International Standard. At the time of publication, the editions indicated were valid. All standards are subject to revision, and parties to agreements based on this International Standard are encouraged to

Copyright International Organization for Standardization
Provided by IHS under license with ISO
No reproduction or networking permitted without license from IHS Not for Resale

investigate the possibility of applying the most recent editions of the standards indicated below. Members of IEC and ISO maintain registers of currently valid International Standards.

IEC 950:1991, *Safety of information technology equipment, including electrical business equipment.*

IEC 721-3-3:1987, *Classification of environmental conditions. Part 3: Classification of groups of environmental parameters and their severities. Section 3: Stationary use at weatherprotected locations.*

4 Definitions

For the purposes of this International Standard the following definitions apply:

4.1 **case :** The housing for an optical disk, that protects the disk and facilitatesdisk interchange.

4.2 **clamping zone :** The annular part of the disk within which the clamping force is applied by the clamping device.

4.3 **Control Track :** and format necessary for writing and reading the remaining tracks on the optical disk.

4.4 **Cyclic Redundancy Check (CRC) :** A method for detecting errors in data.

4.5 **defects management :** A method for handling defective areas on the disk.

4.6 **Disk Reference Plane :** A plane defined by the perfectly flat annular surface of an ideal spindle on to which the clamping zone of the disk is clamped, and which is normal to the axis of rotation.

4.7 **entrance surface** : The surface of the disk on to which the optical beam first impinges.

4.8 **Error Correction Code (ECC) :** An error detecting code designed to correct certain kinds of errors in data.

4.9 **format :** The arrangement or layout of information on the disk.

4.10 **Frame :** The smallest addressable part of a track in the Information zone of a disk that can be accessed by the controller of the disk drive independently of other addressable parts of the zone.

4.11 **holding feature :** The central feature on the disk which interacts with the spindle of the disk drive to provide the radial centring and the clamping force.

Copyright International Organization for Standardization
Provided by IHS under license with ISO
No reproduction or networking permitted without license from IHS Not for Resale

4.12 **interleaving** : The process of allocating the physical sequence of units of data so as to render the data more immune to burst errors.

4.13 **mark** : A feature of the recording layer which may take the form of a hole, a pit, a bubble or any other type of form that can be sensed by the optical system. The pattern of boundaries between marks and spaces represents the data on the disk.

4.14 **optical disk** : A disk that will accept and retain information in the form of marks in a recording layer, that can be read with an optical beam.

4.15 **optical disk cartridge** : A device consisting of a case containing an optical disk.

4.16 **recording layer** : A layer of the disk on, or in, which data is written during manufacture and/or use.

4.17 **Reed-Solomon code** : An error detection and/or correction code which is particularly suited to the correction of errors which occur in bursts or are strongly correlated.

4.18 **sector** : The smallest addressable part of a track in the Information zone of a disk that can be accessed by the host computer independently of other addressable parts of the zone.

4.19 **space** : A feature of the recording layer which takes no deformation by a hole, a pit, a bubble or any other type of form that can be sensed by the optical system. The pattern of boundaries between marks and spaces represents the data on the disk.

4.20 **spindle** : The part of the disk drive which contacts the holding feature.

4.21 **substrate** : A transparent layer of the disk, provided for mechanical support of the recording layer, through which the optical beam accesses the recording layer.

4.22 **track** : The path which is to be followed by the focus of the optical beam during one revolution of the disk.

4.23 **track pitch** : The distance between adjacent track centrelines, measured in a radial direction.

4.24 **WORM disk** : An optical disk in which the data in specified areas can be written only once and read multiple times by an optical beam.

4.25 **Zone** : An annular area of the disk.

Copyright International Organization for Standardization
Provided by IHS under license with ISO
No reproduction or networking permitted without license from IHS Not for Resale

5 Conventions

5.1 Representation of numbers

- A measured value is rounded off to the least significant digit of the corresponding specified value. It implies that a specified value of 1,26 with a positive tolerance of +0,01, and a negative tolerance of -0,02 allows a range of measured values from 1,235 to 1,275 but not including 1,275.
- Letters and digits in parentheses represent numbers in hexadecimal notation.
- The setting of a bit is denoted by ZERO or ONE.
- Numbers in binary notation and bit combinations are represented by strings of ZEROs and ONEs.
- Numbers in binary notation and bit combinations are shown with the most significant bit to the left.
- Negative values of numbers in binary notation are given in TWO's complement.
- In each field the data is recorded so that the most significant byte (byte 0) is recorded first. Within each byte the least significant bit is numbered 0 and is recorded last, the most significant bit (numbered 7 in an 8-bit byte) is recorded first. This order of recording applies also to the data input of the Error Detection and Correction circuits and to their output.

5.2 Names

The names of entities, e.g. specific tracks, fields, etc, are given with a capital initial.

6 Acronyms

CRC	Cyclic Redundancy Check
ECC	Error Correcting Code
HCA	Hash Code replacement Algorithm
LPT	Laser Power Test field
ODC	Optical Disk Cartridge
PEP	Phase Encoded Part
PIB	Pre-formatted Information Bit
RLL	Run Length Limited (code)
SFP	Standard Format Part
SSF	Sample Servo Format (tracking method)
VFO	Voltage Frequency Oscillator
WORM	Write Once Read Multiple

Copyright International Organization for Standardization
Provided by IHS under license with ISO
No reproduction or networking permitted without license from IHS Not for Resale

7 General description of the optical disk cartridge

The optical disk cartridge which is the subject of this International Standard consists of a case containing an optical disk. An optical beam is used to write data to, or to read data from, the disk.

The case is a protective enclosure for the disk. It has access windows covered by a shutter. The windows are automatically uncovered by the drive when the cartridge is inserted into it.

The disk is described in clause 11.

8 General requirements

8.1 Environments

8.1.1 Testing environment

The test environment is defined as an environment where the air immediately surrounding the optical disk cartridge has the following properties:

temperature	: 23°C ± 2°C
relative humidity	: 45 % to 55 %
atmospheric pressure	: 75 kPa to 105 kPa
air cleanliness	: See annex L.

No condensation on or in the optical disk cartridge shall occur. Before testing the optical disk cartridge shall be conditioned in this environment for 24 h minimum. It is recommended that before testing the entrance surface of the optical disk shall be cleaned according to the instructions of the manufacturer of the disk.

8.1.2 Operating environment

This International Standard guarantees that an optical disk cartridge which meets all requirements of this Standard in the specified test environments provides data interchange over the specified ranges of environmental parameters in the operating environment.

The operating environment is defined as an environment where the air immediately surrounding the optical disk cartridge has the following properties:

temperature	: 10°C to 50°C
relative humidity	: 3 % to 80 %
absolute humidity	: 1g per m^3 to 25 g per m^3
atmospheric pressure	: 75 kPa to 105 kPa
temperature gradient	: 10°C per hour max.
temperature shock	: 20°C max.

Copyright International Organization for Standardization
Provided by IHS under license with ISO
No reproduction or networking permitted without license from IHS Not for Resale

relative humidity gradient : 10 % per hour max.

No condensation on or in the ODC shall occur. If an ODC has been exposed to conditions outside those specified in this clause, it shall be acclimatized in an allowed operating environnement for at least 2 h before use. (See also annex K.)

Note: The range of operating environments is based on the assumption that the drive is in an office environment (see annex L) and that the temperature inside the drive can be up to 20°C higher than the temperature outside the drive. Under this condition a cartridge shall withstand the specified temperature shock when either loaded into or unloaded from the drive.

It is recommended that before testing the entrance surface of the optical disk shall be cleaned according to the instructions of the manufacturer of the disk.

8.1.3 Storage environment

The optical disk cartridge without any protective enclosure shall not be stored in an environment outside the range allowed for storage. The storage environment is defined as an environment where the air immediately surrounding the optical disk cartridge has the following properties:

temperature	: -10°C to 50°C
relative humidity	: 3 % to 90 %
absolute humidity	: 1g per m^3 to 25 g per m^3
atmospheric pressure	: 65 kPa to 105 kPa
temperature gradient	: 15°C per hour max.
relative humidity gradient	: 10 % per hour max.

No condensation on or in the optical disk cartridge shall occur.

8.1.4 Transportation

This standard does not specify requirements for transportation. Guidance for transportation is given in annex M.

8.2 Safety requirements

The cartridge shall satisfy the safety requirements of IEC 950, when used in the intended manner or in any foreseeable use in an information processing system.

8.3 Flammability

The cartridge and its components shall be made from materials that comply with the flammability class for HB materials, or better, as specified in IEC 950.

Copyright International Organization for Standardization
Provided by IHS under license with ISO
No reproduction or networking permitted without license from IHS Not for Resale

9 Reference drive

The Reference Drive is a drive of which several critical components have well defined properties, and which is used to test write and read parameters of the disk for conformance to this Standard. The critical components vary from test to test. This clause gives an outline of all components; components critical for tests in specific clauses only are specified in those clauses.

9.1 Optical system

The basic set-up of the optical system of the Reference Drive used for measuring the write and read parameters is shown in figure 1. Different components and locations of components are permitted, provided that the performance remains the same as that of the set-up in figure 1. The optical system shall be such that the detected light reflected from the entrance surface of the disk is minimized so as not to influence the accuracy of the measurements.

The quadrant photocell delivers four currents I_1, I_2, I_3 and I_4. The contributions of diagonally arranged cells are added and respectively provide signas S_1 and S_2. From S_1 and S_2, two signals are derived : a sum signal S_+ and a difference signal S_-.

9.2 Optical beam

The focussed optical beam used for writing and reading data shall have the following properties:

a)	Wavelength (λ)	780 nm $^{+15\ nm}_{-10\ nm}$
b)	Wavelength (λ) divided by the numerical aperture of the objective lens (NA)	λ/NA = 1,423 µm ± 0,035 µm
c)	Filling D/W of the aperture of the objective lens	1,0 max
d)	Variance of the wavefront of the optical beam near the recording layer	λ^2/180 max

e) The optical power and pulse width for writing and reading shall be as specified in 25.2.2, 25.3, 27.2.2 and 28.2.2

f) Polarization circular.

D is the diameter of the lens aperture and W is the beam diameter of the Gaussian beam where the intensity is $1/e^2$ of the maximum intensity.

Copyright International Organization for Standardization
Provided by IHS under license with ISO
No reproduction or networking permitted without license from IHS Not for Resale

9.3 Read channels

A read channel shall be provided to generate signals from the marks in the recording layer. It shall be split into two sub-channels : Channel 1 for reading the embossed marks, Channel 2 for reading the user-written marks. The read amplifier after the photo-detectors in both channels shall have a flat response within ±1 dB from 100 kHz to 23 MHz.

Sampling of signal S_+ with triggering signals C_d and C_{du} provides the data signals S_d and S_{du}.

9.4 Tracking

The tracking signals are the radial tracking signal S_t and the focusing signal S_f.

The focusing signal S_f is derived from signal S_- by sampling and holding it when the light spot scans a land part of the track as specified in clauses 15.1.1.2 and 15.1.3. This sampling is triggered by signal C_f.

The radial tracking signal S_t is derived from signal S_+ by sampling and holding it when the light spot scans the left and right laterally displaced features of the offset radial mark specified in clauses 15.1.1.2 and 15.1.3 (signals S_l and S_r). This sampling is triggered by signal C_t.

The requirements for the accuracy with which the focus of the optical beam must follow the tracks is specified in 20.2.4.

9.5 Rotation of the disk

The spindle shall position the disk as specified in 12.5. It shall rotate the disk at 25,0 Hz ± 0,25 Hz. The reference drive shall be able to rotate both directions. The direction of rotation is determined by the sensor hole that indicates side A or side B of the cartridge.

Copyright International Organization for Standardization
Provided by IHS under license with ISO
No reproduction or networking permitted without license from IHS
Not for Resale

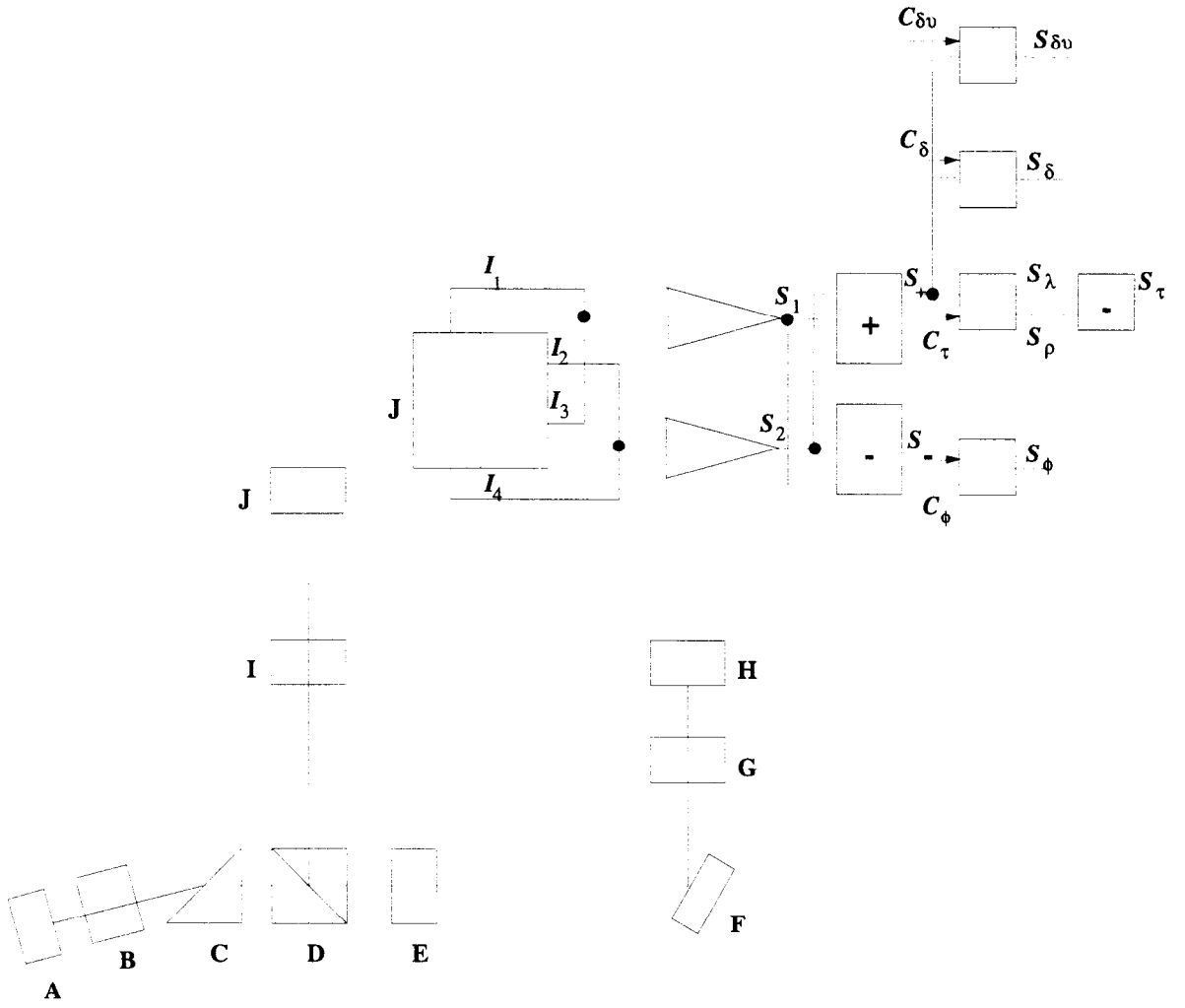

A	Laser diode	F	Radial mirror
B	Collimator lens	G	Objective lens
C	Beam shaping prism	H	Optical disk
D	Polarizing beamsplitter	I	Cylindrical/spherical lens
E	Quarter-wave plate	J	Quadrant photocell

Figure 1 - Optical system of the Reference Drive

Copyright International Organization for Standardization
Provided by IHS under license with ISO
No reproduction or networking permitted without license from IHS
Not for Resale

Section 2: Mechanical and physical characteristics

10 Dimensional and physical characteristics of the case

10.1 General description of the case

The case is a rigid protective container (box) of rectangular shape (see figure 2). It includes a shutter which uncovers access windows upon insertion into the drive, and automatically covers them upon removal from the drive. The case shall have means for positioning and identifying the cartridge, and it has a (one) write-inhibit feature.

10.2 Reference planes of the case (see figure 2)

The dimensions of the case are referred to three orthogonal reference planes X, Y and Z. The case shall be constrained such that the four reference surfaces S_1 to S_4 on one side of the case lie in plane Z when measuring those dimensions of the case in clause 10.3 which are referenced to this plane. The intersection of the three planes defines the centre of the radius for the bottom corner of the triangular Location hole (see figure 3). The centres of the radii for the two bottom corners of the rectangular Alignment hole shall lie in X plane (see figure 3). A dimension of a feature referenced to one of the planes is the shortest distance from the feature to the plane.

10.3 Dimensions of the case

The dimensions of the case shall be measured in the test environment.

10.3.1 Overall dimensions (see figure 3)

The total length of the case shall be

$$l_1 = 340{,}0 \text{ mm} \pm 0{,}6 \text{ mm} \qquad \text{(at testing environment),}$$

$$l_1 = 340{,}0 \text{ mm} \begin{matrix} + \ 1{,}5 \text{ mm} \\ - \ 1{,}1 \text{ mm} \end{matrix} \qquad \text{(at operating environment).}$$

The distance from the bottom of the case to reference plane X shall be

$$l_2 = 35{,}0 \text{ mm} \pm 0{,}3 \text{ mm.}$$

The distance from the top of the case to reference plane X shall be

$$l_3 = 305{,}0 \text{ mm} \pm 0{,}3 \text{ mm.}$$

Copyright International Organization for Standardization
Provided by IHS under license with ISO
No reproduction or networking permitted without license from IHS Not for Resale

The total width of the case shall be

$l_4 = 320{,}0\ \text{mm} \pm 0{,}6\ \text{mm}$ (at testing environment)

$l_4 = 320{,}0\ \text{mm}\ {}^{+\ 1{,}5\ \text{mm}}_{-\ 1{,}1\ \text{mm}}$ (at operating environment);

The distance from the left hand side of the case to reference plane Y shall be

$l_5 = 300{,}0\ \text{mm}\ {}^{+\ 0{,}0\ \text{mm}}_{-\ 0{,}5\ \text{mm}}$

The distance from the right hand side of the case to reference plane Y shall be

$l_6 = 20\ \text{mm} \pm 0{,}2\ \text{mm}.$

The four corners shall be rounded with a radius

$r_1 = 5\ \text{mm} \pm 1{,}0\ \text{mm}.$

The thickness of the case shall be

$l_7 = 17{,}0\ \text{mm} \pm 0{,}4\ \text{mm}$ (at testing environment)

$l_7 = 17{,}0\ \text{mm} \pm 0{,}8\ \text{mm}$ (at operating environment).

The eight long edges of the case shall be rounded with a radius

$r_2 = 0{,}5\ \text{mm}$ max.

10.3.2 Location hole (see figure 3)

The Location hole shall have a rounded triangular shape. The corners shall be rounded with a radius

$r_3 = 5{,}0\ \text{mm} \pm 0{,}1\ \text{mm}.$

The centre of the of the bottom shall be the point of the intersection of planes X, Y and Z. The angle of this corner shall be

$\theta_1 = 30^\circ \pm 1^\circ$ divided symmetrically by plane Y.

The length of this hole shall be

$l_8 = 18{,}0\ \text{mm}\ {}^{+\ 0{,}3\ \text{mm}}_{-\ 0{,}1\ \text{mm}}$

The Location hole shall be held to a depth

$l_9 = 1{,}5\ \text{mm}$ min.

Copyright International Organization for Standardization
Provided by IHS under license with ISO
No reproduction or networking permitted without license from IHS Not for Resale

Below l_9 the Location hole shall extend to

$$l_{10} = 8 \text{ mm min}$$

with an area equal to, or greater than the Location hole.

The Location hole shall not extend through Side B.

The lead-in edges shall be rounded with a radius

$$r_4 = 0{,}5 \text{ mm max.}$$

10.3.3 Alignment hole (see figure 3)

The Alignment hole shall have a rounded rectangular shape. The vertical centre line of the hole shall lie

$$l_{11} = 280{,}0 \text{ mm} \pm 0{,}2 \text{ mm}$$

from reference plane Y.
Its dimensions shall be

$$l_{12} = 18{,}0 \text{ mm} \begin{matrix} + \ 0{,}3 \text{ mm} \\ - \ 0{,}1 \text{ mm} \end{matrix}$$

$$l_{13} = 14{,}0 \text{ mm} \pm 0{,}5 \text{ mm.}$$

The corners shall be rounded with a radius

$$r_5 = 5{,}0 \text{ mm} \pm 0{,}5 \text{ mm.}$$

The centres of the radii for the bottom corners shall lie in plane X. The Alignment hole shall be held to a depth l_9 below wich the Alignment hole shall extend to L_{10} with dimensions equal to, or greater than, l_{12} and l_{13} respectively.

The Alignment hole shall not extend through side B.

The lead-in edges shall be rounded with a radius r_4.

10.3.4 Reference surfaces (see figure 4)

Each side of the case shall contain four reference surfaces S_1, S_2, S_3 and S_4.

Surfaces S_1 and S_2 shall be circular with a diameter

$$d_1 = 24{,}0 \text{ mm min.}$$

The centre of S1 shall be located on the plane Y and

$$l_{14} = 4{,}0 \text{ mm} \pm 0{,}2 \text{ mm}$$

above plane X.

The centre of S_2 shall be centred at

$$l_{15} = 280{,}0 \text{ mm} \pm 0{,}3 \text{ mm}$$

Copyright International Organization for Standardization
Provided by IHS under license with ISO
No reproduction or networking permitted without license from IHS
Not for Resale

from plane Y and

l_{16} = 4,0 mm ± 0,2 mm

above plane X.

Surfaces S_3 and S_4 shall be circular with a diameter

d_2 = 16,0 mm min

with their centres located at

l_{17} = 255,0 mm ± 0,3 mm

from plane X and

l_{18} = 5,0 mm ± 0,2 mm
l_{19} = 270,0 mm ± 0,3 mm

from plane Y respectively.

All of the reference surfaces S1, S2, S3 and S4 shall be recessed from a case surface with a depth

l_{20} = (5,2 - t)/2

where t is the enveloped disk thickness.

10.3.5 Detents (see figure 5)

The case shall have four symmetrical detent slots intended for positioning or autoloading the cartridge.

The centres of the two upper slots shall be located at a distance

l_{21} = 60 mm ± 0,3 mm

from the top of the case and the centres of the two lower slots shall be located at a distance l_{21} from the bottom of the case.

Each slot shall have a triangular shape with a width of

l_{22} = 8,0 mm ± 0,1 mm

and an opening angle

$_2$ = 90° ± 1°.

The root of each slot shall be rounded with a radius

r_6 = 3,0 mm max.

The corners of each slot shall be rounded with a radius

r_7 = 1,0 mm max.

The slots shall not extend through the full thickness of the case. When viewed from the A side, the right slots shall be constrained to side A and the left slots shall be constrained to side B.

Copyright International Organization for Standardization
Provided by IHS under license with ISO
No reproduction or networking permitted without license from IHS Not for Resale

10.3.6 Write-inhibit feature (see figure 6)

The case shall have a (one) common write-inhibit feature for both sides A and B. The centre of the write-inhibit feature is located on plane X and

l_{23} = 20,0 mm ± 0,1 mm

from plane Y. Opening of the feature shall be square with the dimension specified by

l_{24} = 8,0 mm ± 0,2 mm.

The closed condition of the opening shall define the write enabled condition ; the opened condition of the opening shall define the write inhibited condition. The surface of the movable piece of the feature shall be at the position

l_{25} = 0,5 mm max.

when in closed position.

The four corners of the opening shall be rounded with a radius

r_8 = 0,5 mm max.

10.3.7 Head and spindle access windows (see figure 7)

Each side of the case shall have a window to enable the spindle and the optical head of the drive to access the disk. The dimensions of each head access and spindle access windows are referenced to a centre line, located at a distance

l_{26} = 140,0 mm ± 0,2 mm

from plane Y.

The width of the window shall be given by

l_{27} = 35,0 mm min.

The bottom of the window shall be at a distance

l_{28} = 167,0 mm max

from plane X.

The centre of the spindle access circular window shall be defined by l_{29}

l_{29} = 122,0 mm ± 0,2 mm

from plane X, and a diameter of the circular window shall be

d_3 = 80,0 mm min.

The top of the head access window shall be located at a distance

l_{30} = 289,0 mm min

from plane X.

Copyright International Organization for Standardization
Provided by IHS under license with ISO
No reproduction or networking permitted without license from IHS Not for Resale

The corners of the window shall be rounded with a radius

r_9 = 5,0 mm max.

10.3.8 Shutter, shutter openers and mis-insert protection feature (see figure 8)

The case shall contain a shutter, a side shutter opener feature and a front shutter opener feature.

10.3.8.1 Shutter

The cartridge case shall have a spring-loaded shutter, that shall completely cover the head and spindle access windows when closed. When opened, the shutter shall expose the windows up to at least the minimum size for the circle specified in 10.3.7. The drive shall use either the side shutter opener feature, or the front shutter opener feature to open the shutter.

10.3.8.2 Side shutter opener feature

The side shutter opener feature shall be provided in the right side loading groove viewing from side A. The movement of the shutter shall be controlled with the movement of the movable piece in the loading groove. The surface of the movable piece shall be recessed

l_{31} = 0,3 mm max.

from the bottom of the loading groove. The width of the opening for the movable piece shall be

l_{32} = 5,0 mm ± 0,2 mm.

The dimension of the leading groove at the corner of the case shall be

l_{33} = 5,0 mm ± 0,2 mm

$l_{34} = 9{,}0\ \text{mm}\ {}^{+\,1{,}00\ \text{mm}}_{-\,0{,}00\ \text{mm}}$

The position of the movable piece in the shutter opening mechanism, when the shutter is completely open, shall not exceed

l_{35} = 110,0 mm min.

The shutter opening stroke of the movable piece shall be completed at the position of

l_{36} = 108 mm max.

from the top of the case. At the bottom of left side groove, a trench shall be provided for the escapement of the shutter opening provision in a drive. The width, depth and length of the trench shall be defined by l_{32}, l_{34} and l_{35} respectively.

Copyright International Organization for Standardization
Provided by IHS under license with ISO
No reproduction or networking permitted without license from IHS Not for Resale

10.3.8.3 Front shutter opener feature

The front shutter opener feature is a notch located at the front of the shutter. The notch shall be located at a distance

$$l_{37} = 108{,}0 \text{ mm} \pm 0{,}4 \text{ mm}$$

from plane Y, and

$$l_{38} = 5{,}7 \text{ mm} \pm 0{,}2 \text{ mm}$$

from plane Z. The dimensions of the notch shall be

$$l_{39} = 19{,}0 \text{ mm} \begin{matrix} +0{,}4 \text{ mm} \\ -0{,}0 \text{ mm} \end{matrix}$$

in length

$$l_{40} = 5{,}6 \text{ mm} \begin{matrix} +0{,}3 \text{ mm} \\ -0{,}0 \text{ mm} \end{matrix}$$

in width and

$$l_{41} = 6{,}0 \text{ mm} \begin{matrix} +0{,}3 \text{ mm} \\ -0{,}0 \text{ mm} \end{matrix}$$

in depth.

10.3.8.4 Mis-insert protection feature

The mis-insert protection feature shall be provided in both loading grooves.

10.3.9 Loading grooves (see figure 9)

Both sides of the case shall contain grooves for loading, and mis-insert protection feature to prevent the cartridge from being inserted improperly.

The case shall have loading grooves in both sides, the cross sectional dimensions are specified by

$l_{42} = 4{,}0 \text{ mm} \pm 0{,}1 \text{ mm}$
$l_{43} = 1{,}0 \text{ mm} \pm 0{,}1 \text{ mm}$
$l_{44} = 4{,}0 \text{ mm min}$
$l_{45} = 9{,}0 \text{ mm min.}$

10.3.10 Sensor holes (see figure 10)

The case shall have two sets of three media sensor holes to identify the following conditions:

Copyright International Organization for Standardization
Provided by IHS under license with ISO
No reproduction or networking permitted without license from IHS Not for Resale

LOCATION		OPEN	CLOSED
OUTER	SIDE A / SIDE B	A	B
CENTRE	REFLECTANCE	7% - 23%	15% - 50%
INNER	SPARE	---	---

The set of holes at the lower left hand corner of side A of the case pertains to side A of the disk. The holes shall extend through the case, and have a diameter of

d_4 = 8,0 mm ± 0,1 mm.

The positions of their centres shall be specified by

l_{46} = 20,0 mm ± 0,2 mm

from plane X and

l_{47} = 5,0 mm ± 0,2 mm

l_{48} = 20,0 mm ± 0,2 mm

l_{49} = 35,0 mm ± 0,2 mm

l_{50} = 275,0 mm ± 0,3 mm

l_{51} = 260,0 mm ± 0,3 mm

l_{52} = 245,0 mm ± 0,3 mm

from plane Y.

10.3.11 Gripper features (see figure 11)

The case shall have two separate gripper features intended for autoloading. These features are described in 10.3.11.1 and 10.3.11.2.

10.3.11.1 Gripper slots

The case shall have four symmetrical gripper slots. The slots shall have a depth of

l_{53} = 14,0 mm ± 0,3 mm

from the edge of the case and a width of

Copyright International Organization for Standardization
Provided by IHS under license with ISO
No reproduction or networking permitted without license from IHS Not for Resale

The lower edge of a slot shall be

l_{55} = 12,0 mm ± 0,3 mm

above the bottom of the case. The lower edge of the slots is recessed by

l_{56} = 6,0 mm ± 0,3 mm

from the side surfaces of the case.

The top outer corner of each slot shall be rounded with a radius

r_{10} = 3,0 mm max.

The inner corners and lower outer corner of each slot shall be rounded with a radius

r_{11} = 1,0 mm max.

10.3.11.2 Gripper holes

The case shall have two symmetrical gripper holes. The centre of each hole shall be located at a distance

l_{57} = 75,0 mm ± 0,3 mm

from each side of the case, and shall be located at a distance

l_{58} = 14,0 mm ± 0,3 mm

from the bottom of the case.

Each hole is defined by a rectangular shape having a width of

l_{59} = 12,0 mm ± 0,3 mm

and a length of

l_{60} = 10,0 mm ± 0,3 mm.

The corners of each hole shall be rounded with a radius

l_{12} = 3,0 mm max.

Each hole shall extend through the thickness of the case.

The opening of each gripper hole from the surface of the case shall extend

l_{61} = 7,0 mm ± 0,2 mm

into the thickness of the case.

Copyright International Organization for Standardization
Provided by IHS under license with ISO
No reproduction or networking permitted without license from IHS Not for Resale

The opening shall have a width of

l_{62} = 19,0 mm ± 0,3 mm

and a length of

l_{63} = 16,0 mm ± 0,3 mm

extending from the top edge of a hole.

The top corners of the opening shall be rounded with a radius

r_{13} = 3,0 mm max.

The bottom corners of the opening shall be rounded with a radius

r_{14} = 1,0 mm max.

All edges of the holes and extentions shall be rounded with a radius

r_{15} = 0,5 mm max.

10.3.12 Label area (see figure 12)

The case shall have the following minimum areas for user labels:

- on side A and side B : 69,0 mm x 206,0 mm,
- on the bottom side : 10,0 mm x 250,0 mm.

These areas shall be recessed by 0,2 mm min. Their positions are specified by the following dimensions and relations between dimensions (see figure 12):

l_{64} = 64,0 mm max

$l_{65} - l_{64}$ = 206,0 mm max

l_{66} = 187,0 mm max

$l_{67} - l_{66}$ = 69,0 mm max

$l_4 - 2 \times l_{68}$ = 250,0 mm max

$l_7 - 2 \times l_{69}$ = 9,0 mm max.

All corners of the Label areas shall be rounded with a radius

r_{16} = 3,0 mm max.

Copyright International Organization for Standardization
Provided by IHS under license with ISO
No reproduction or networking permitted without license from IHS Not for Resale

10.4 Mechanical characteristics

10.4.1 Material

The case shall be constructed from any suitable materials such that it meets the requirements of this International Standard. The dimensions of the case in an operating environment can be estimated from the dimensions in 10.3.

10.4.2 Mass

The mass of the case without the optical disk shall not exceed 850 g.

10.4.3 Distortion

The cartridge shall meet the requirement of the distortion test defined in annex A. The requirement guarantees that a cartridge can be inserted into the slot of a drive.

10.4.4 Compliance

The cartridge shall meet the requirement of the compliance (flexibility) test defined in annex B. The requirement guarantees that a cartridge can be constrained in the proper plane of operation within the drive.

10.4.5 Shutter opening force

The spring force on the shutter shall be such that the force required to open the shutter does not exceed 5 N. It shall be sufficiently strong to close a free-sliding shutter, irrespective of the orientation of the case.

11 Dimensional, mechanical and physical characteristics of the disk

11.1 General description of the disk

The disk includes two facing circular substrates with some additional mechanical features joining the substrates. A recording layer shall be coated on one (single sided) or both (double sided) inner surfaces (see figure 13). The information zone of the substrate is transparent to allow an optical beam to focus on the recording layer through the substrate. Pre-formatted information is included in the recording layer to allow the optical beam to follow a spiral track through the information zone. In the case of a double sided media, one side shall have a reverse spiral direction from the other. For single sided media, either spiral direction is allowed. The centre zone of the substrates provides the interface with the spindle of the drive. This interface provides the radial centring, axial positioning and clamping area of the disk.

Copyright International Organization for Standardization
Provided by IHS under license with ISO
No reproduction or networking permitted without license from IHS
Not for Resale

11.2 Reference axis and plane of the disk

The dimensions of the disk are referred to a reference axis A and a reference plane P. P is defined by the perfectly flat annular surface of an ideal spindle onto which the clamping zone of the disk is clamped, and which is normal to the axis of rotation of this spindle. Axis A passes through the centre of the centre hole of the holding feature, and is normal to plane P.

11.3 Dimensions of the disk

The outer diameter of the disk shall be

$$300{,}0 \text{ mm} \begin{matrix} +\ 0{,}5 \text{ mm} \\ -\ 0{,}0 \text{ mm} \end{matrix}$$

The disk is divided into five annular zones, which are, from the centre to the outer edge, Centre Zone, Clamping Zone, Transition Zone, Information Zone and Rim Zone.

The nominal value of the thickness of the disk except in the Centre Zone shall be in the range of

2,4 mm to 5,2 mm.

The tolerances for each nominal value of the thickness shall be within ± 0,2 mm.

The centres of all radii in 11.3 lie on axis A.

The positions of the top and bottom surfaces of the disk include changes due to the axial deflection of the disk and variations in the overall thickness of the disk, caused by e.g. the protective layer and/or adhesive labels.

The dimensions of the disk shall be measured in the testing environment.

11.3.1 Centre Zone (see figure 13)

The centre hole shall have a diameter

$$d_5 = 35{,}0 \text{ mm} \begin{matrix} +\ 0{,}1 \text{ mm} \\ -\ 0{,}0 \text{ mm} \end{matrix}$$

The Centre Zone shall extend from the centre of the disk to

r_{17} = 30,0 mm ± 0,2 mm.

Copyright International Organization for Standardization
Provided by IHS under license with ISO
No reproduction or networking permitted without license from IHS Not for Resale

11.3.2 Clamping Zone (see figure 13)

The Clamping Zone shall extend from r_{17} to

r_{18} = 38,0 mm ± 0,2 mm.

11.3.3 Transition Zone

The Transition Zone shall extend from r_{18} to

r_{19} = 64,0 mm ± 0,1 mm.

11.3.4 Information Zone

The Information Zone shall extend from r_{19} to

r_{20} = 142,0 mm ± 0,1 mm.

11.3.5 Rim Zone

The Rim Zone shall extend from r_{20} to media edge.

11.4 Mechanical characteristics

All requirements in this clause must be met in the operating environment.

11.4.1 Material

The disk shall be made from any suitable materials such that it meets the requirements of this International Standard. The only material properties specified by this Standard are the properties of the substrate in the Information zone. The dimensions of the disk in an operating environment can be estimated from the dimensions in 11.3.

11.4.2 Mass

The mass of the disk shall be 600 g max.

11.4.3 Moment of inertia

The moment of inertia of the disk relative to axis A shall be 6,0 g.m^2 max.

Copyright International Organization for Standardization
Provided by IHS under license with ISO
No reproduction or networking permitted without license from IHS Not for Resale

11.4.4 Imbalance

The imbalance of the disk relative to axis A shall not exceed 0,08 g.m.

11.4.5 Axial deflection

The axial deflection of the disk in the Information Zone is measured as the axial deviation of the recording layer, as seen by the optical head of the Reference Drive (see clause 9). Thus it comprises the tolerances on the thickness of the substrate, on its index of refraction and the deviation of the entrance surface from plane P. The nominal position of the recording layer with respect to reference plane P is determined by the nominal thickness of the substrate.

The deflection of any point of the recording layer in the information zone from its nominal position, in a direction normal to plane P, shall not exceed 0,5 mm for rotational frequencies of the disk up to 25,0 Hz.

11.4.6 Axial acceleration

The maximum allowed axial error emax (see annex C) shall not exceed ±1,0 µm, measured using the Reference Servo for axial tracking of the recording layer. The rotational frequency of the disk shall be 25,0 Hz ± 0,25 Hz. The stationary part of the motor is assumed to be motionless (no external disturbances). The measurement shall be made using a servo with the transfer function

$$\mathcal{H}_\sigma = \frac{1}{c}\left(\frac{\omega_o}{i\omega}\right)^2 \frac{1 + ic\omega / \omega_o}{1 + i\omega / c\omega_o}$$

where $i = \sqrt{-1}$, $\omega = 2\pi f$, $\omega_o = 2\pi f_o$ and $c = 3$

or any other servo with $|1+H|$ within 20 % of $|1+H_S|$ in the bandwidth of 25 Hz to 1,5 kHz. Thus, the disk shall not require an acceleration of more than 35 m/s^2 at the freqencies lower than 1,5 k Hz from the servo motor of the Reference Servo.

11.4.7 Radial runout

The radial runout of the tracks in the recording layer in the Information zone is measured as seen by the optical head of the Reference Drive (see clause 9). Thus it includes the distance between the axis of rotation of the spindle and reference axis A, the tolerances on the dimensions between axis A and the location of the track, and effects of non-uniformities in the index of refraction.

The runout, defined as the difference between the maximum and minimum distance of the centre of any track from the axis of rotation, measured along a fixed radial line over one revolution of the disk, shall not exceed 90 µm at a rotational frequency of the disk of 25,0 Hz ± 0,25 Hz.

Copyright International Organization for Standardization
Provided by IHS under license with ISO
No reproduction or networking permitted without license from IHS Not for Resale

11.4.8 Radial acceleration

The maximum allowed radial error emax (see Annex C) shall not exceed ± 0,10 µm, measured using the Reference Servo for radial tracking of tracks. The rotational frequency of the disk shall be 25,0 Hz ± 0,25 Hz. The stationary part of the motor is assumed to be motionless (no external disturbances). The measurement shall be made using a servo with the transfer function

$$H_\sigma = \frac{1}{c}\left(\frac{\omega_o}{i\omega}\right)^2 \frac{1 + ic\omega / \omega_o}{1 + i\omega / c\omega_o}$$

where $i = \sqrt{-1}$, $\omega = 2\pi f$, $\omega_o = 2\pi f_o$ and $c = 3$

or any other servo with $|1+H|$ within 20 % of $|1+H_S|$ in the bandwidth of 25 Hz to 1,5 kHz. Thus, the disk shall not require an acceleration of more than 10 m/s^2 at the frequencies lower than 1,5 kHz from the servo motor of the Reference Servo.

11.4.9 Tilt

Tilt is the angle which the normal to the entrance surface, averaged over an area of 1 mm diameter, makes with the normal to plane P. It shall not exceed 5 mrad in the Information Zone.

11.5 Optical characteristics

11.5.1 Index of refraction

The index of refraction of the substrate in the Information Zone shall be within the range from 1,46 to 1,60.

11.5.2 Thickness of the substrate

The thickness of the substrate, from the entrance surface to the recording layer, in the Information Zone shall be

$$0{,}5903 \times \frac{n^3}{n^2 - 1} \times \frac{n^2 + 0{,}6250}{n^2 + 0{,}5929} \text{ mm } \pm \ 0{,}050 \text{ mm}$$

where n is the index of refraction.

11.5.3 Birefringence

The birefringence of double-pass shall not exceed 100 nm.

Copyright International Organization for Standardization
Provided by IHS under license with ISO
No reproduction or networking permitted without license from IHS Not for Resale

11.5.4 Reflectance

The double-pass optical transmission of the substrate and the reflectance of the recording layer are measured together as the reflectance r of the disk. The measurement excludes the reflection of the entrance surface.

The value of r at the standard wavelength specified in 9.2 shall lie within the range from 0,07 to 0,50 for all types of disks.

The nominal value of r shall be specified in byte 3 of the PEP control data (see annex F).

The actual value r_m shall be measured with the focussed beam and wavelength of the Reference Drive (see clause 9). It shall be measured in any unrecorded, ungrooved area.

At any point within the Information Zone the value rm shall be within ± 12 % of the value of r.

12 Interface between cartridge and drive

12.1 Clamping method

When the cartridge is inserted into the drive, the shutter of the case is opened and the drive spindle engages the disk.The disk is held against the spindle by an axial clamping force. The radial positioning of the disk is provided by the centring of the axle of the spindle in the centre hole. The turntable of the spindle shall support the disk in its clamping zone, determining the axial position of the disk.

12.2 Hub (see figure 13)

The disk shall have a hub as a clamping feature having the centre hole of diameter d_5. The diameter of the hub shall be

$$d_6 = 55{,}0 \text{ mm} \pm 0{,}2 \text{ mm}$$

and shall protrude

$$l_{70} = 2{,}5 \text{ mm} \pm 0{,}1 \text{ mm}$$

from the disk surface. The outer edge of the hub shall be rounded with a radius

$$r_{21} = 0{,}2 \text{ mm max.}$$

The material of the hub shall be a magnetizable material and the hub shall have twelve holes of diameter

Copyright International Organization for Standardization
Provided by IHS under license with ISO
No reproduction or networking permitted without license from IHS Not for Resale

d_7 = 4,0 mm ± 0,1 mm.

The holes shall be arranged along the circle of radius

d_8 = 43,0 mm ± 0,1 mm.

The depth of the holes shall be

l_{71} = 2,0 mm min.

The leading edge of the centre hole shall have the chamfer with an angle of

θ_3 = 15° ± 0,2°

to the direction of the axis A, and the depth of the leading edge of the centre hole shall be

l_{72} = 1,5 mm ± 0,1 mm.

12.3 Clamping force

The clamping force shall not exceed 22 N and the clamping device shall meet the requirements in annex J.

12.4 Capture cylinder (see figure 14)

The capture cylinder is defined as the volume in which the spindle can expect the centre of the hole in the hub to be, just prior to capture, and with the cartridge constrained as in 10.4.4. The centre of the hole is defined as the point on axis A at a distance l_{72} from the plane defined by the hub surface (see 11.3.1 and figure 13).

The size of the cylinder defines the permissible play of the disk inside its cavity in the case. The cylinder is referred to perfectly sized alignment and location pins in the drive; it includes the tolerances of those dimensions of the case and the disk which are between the two pins mentioned and the centre of the hub.

The bottom of the cylinder is parallel to the plane Z, and shall be located a distance

l_{73}= 0,5 mm min

above plane Z. The top of the cylinder shall be

l_{74} = 5,9 mm max

above plane Z. The radius of the cylinder shall be

d_9 = 4,8 mm max.

Copyright International Organization for Standardization
Provided by IHS under license with ISO
No reproduction or networking permitted without license from IHS Not for Resale

12.5 Disk position in operating condition (see figure 14)

When the disk is in operating condition within the drive, the position of plane P of the disk shall be

$$l_{75} = 5{,}9 \text{ mm} \pm 0{,}3 \text{ mm}$$

above the reference surfaces S1,S2,S3 and S4, and the axis of rotation shall be within a circle with a radius

$$d_{10} = 0{,}5 \text{ mm max.}$$

The torque to be exerted on the disk in operating condition in order to maintain a rotational frequency of 25,0 Hz shall not exceed 0,1 N.m.

Copyright International Organization for Standardization
Provided by IHS under license with ISO
No reproduction or networking permitted without license from IHS Not for Resale

© ISO/IEC

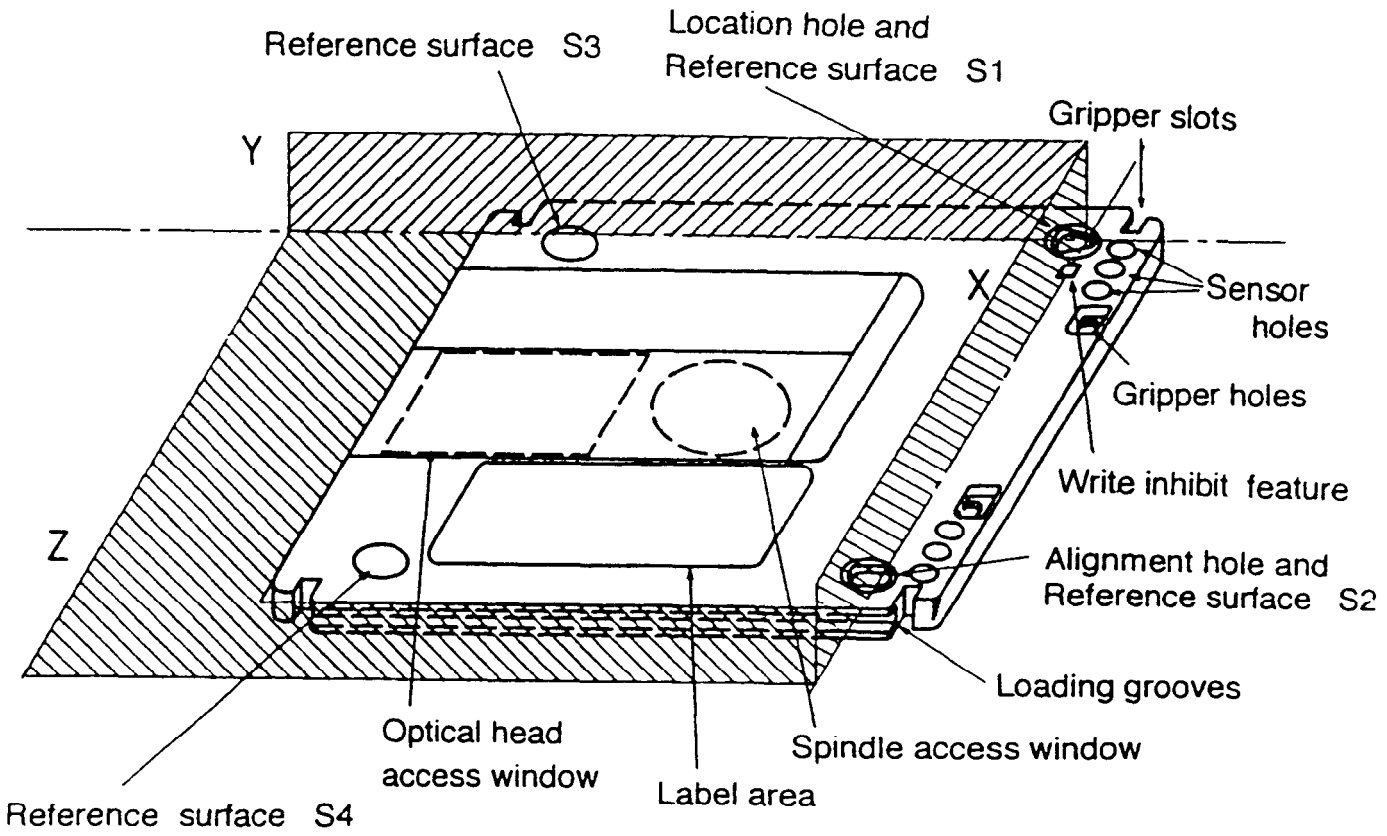

Figure 2 - General view of the case showing position of the cartridge relative to the reference planes

Copyright International Organization for Standardization
Provided by IHS under license with ISO
No reproduction or networking permitted without license from IHS
Not for Resale

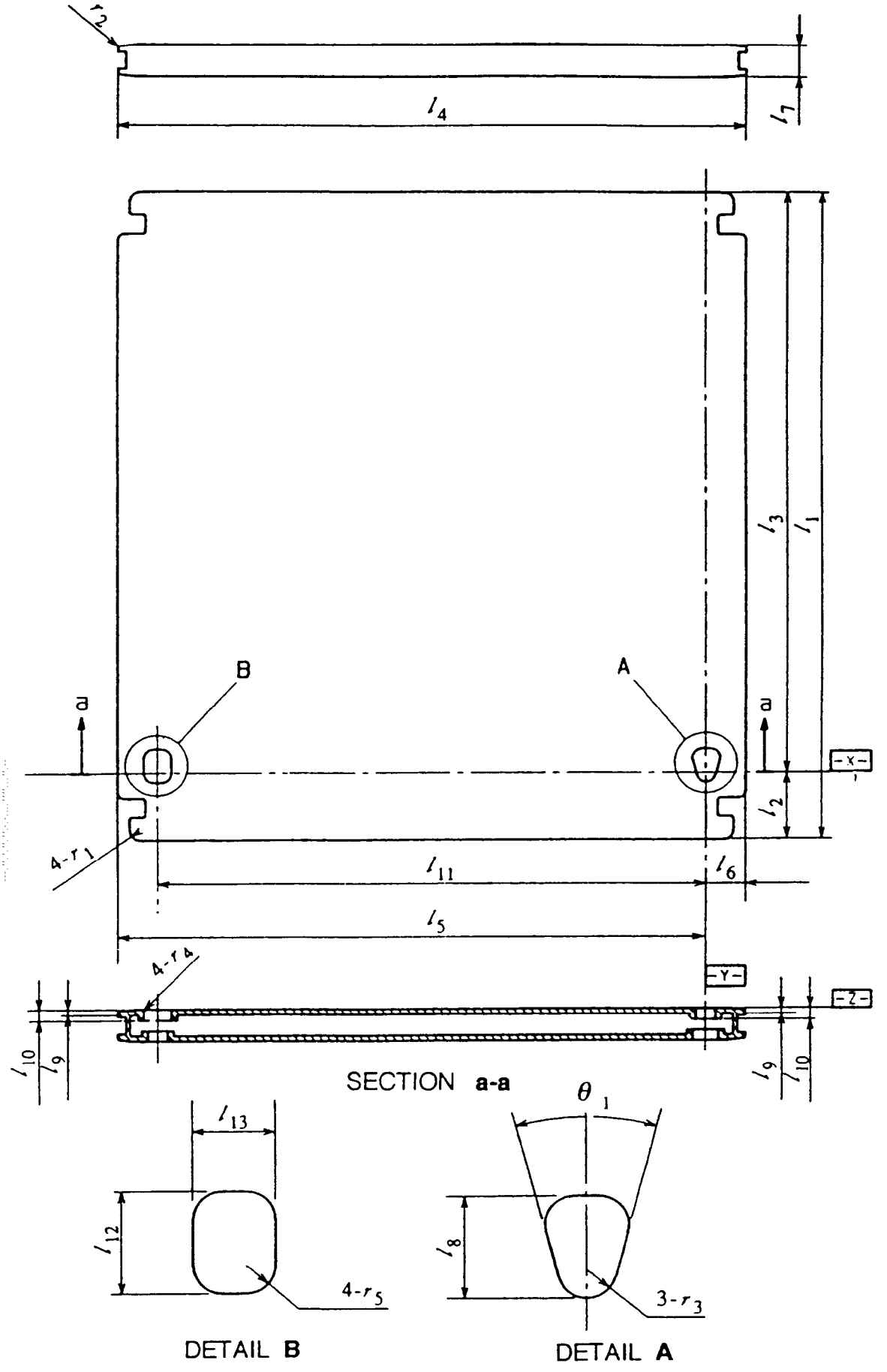

Figure 3 - Overall dimensions viewed on side A

Copyright International Organization for Standardization
Provided by IHS under license with ISO
No reproduction or networking permitted without license from IHS
Not for Resale

© ISO/IEC

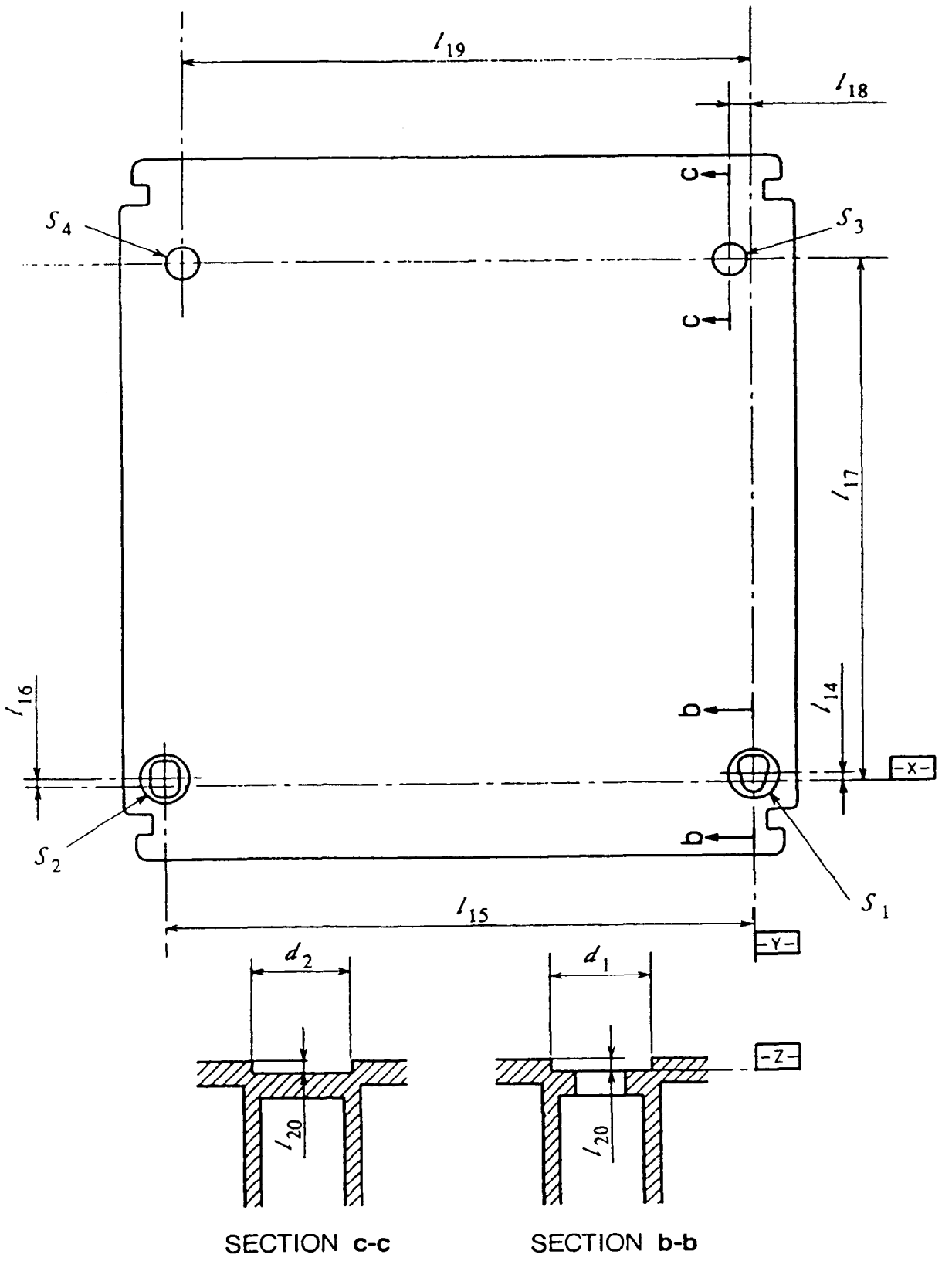

Figure 4 - Reference surfaces

Copyright International Organization for Standardization
Provided by IHS under license with ISO
No reproduction or networking permitted without license from IHS
Not for Resale

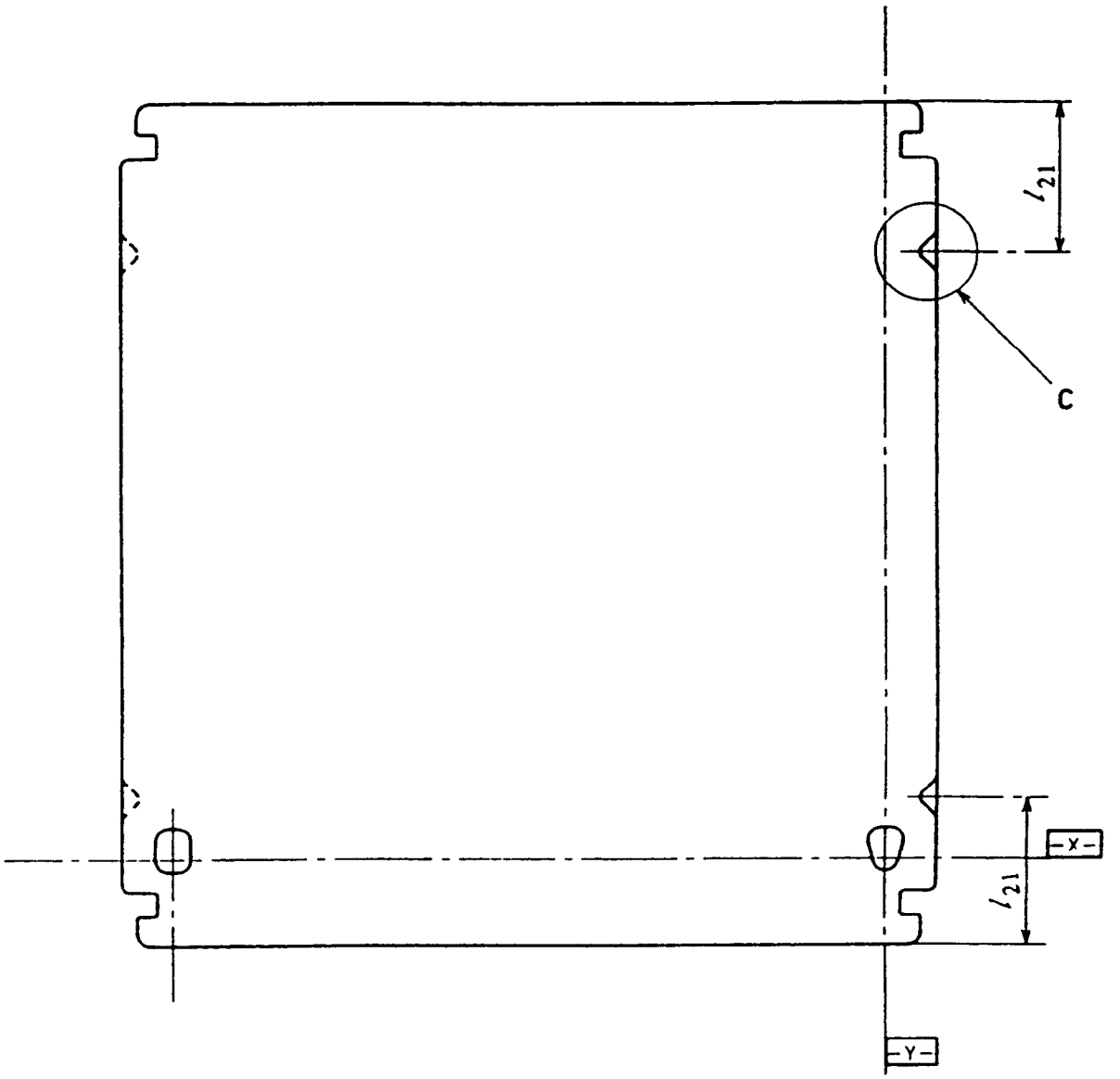

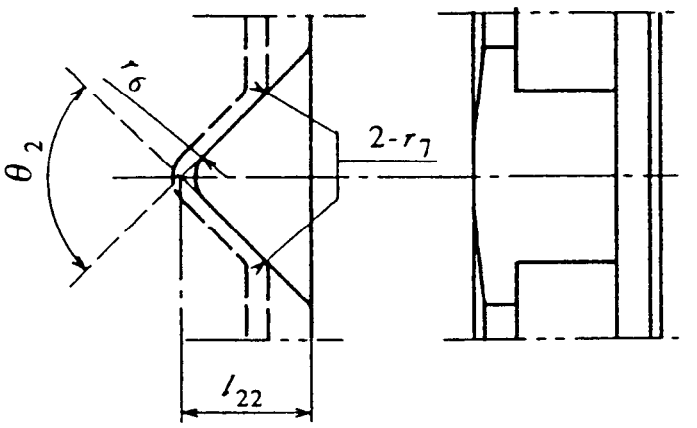

DETAIL C

Figure 5 - Detents

Copyright International Organization for Standardization
Provided by IHS under license with ISO
No reproduction or networking permitted without license from IHS
Not for Resale

© ISO/IEC

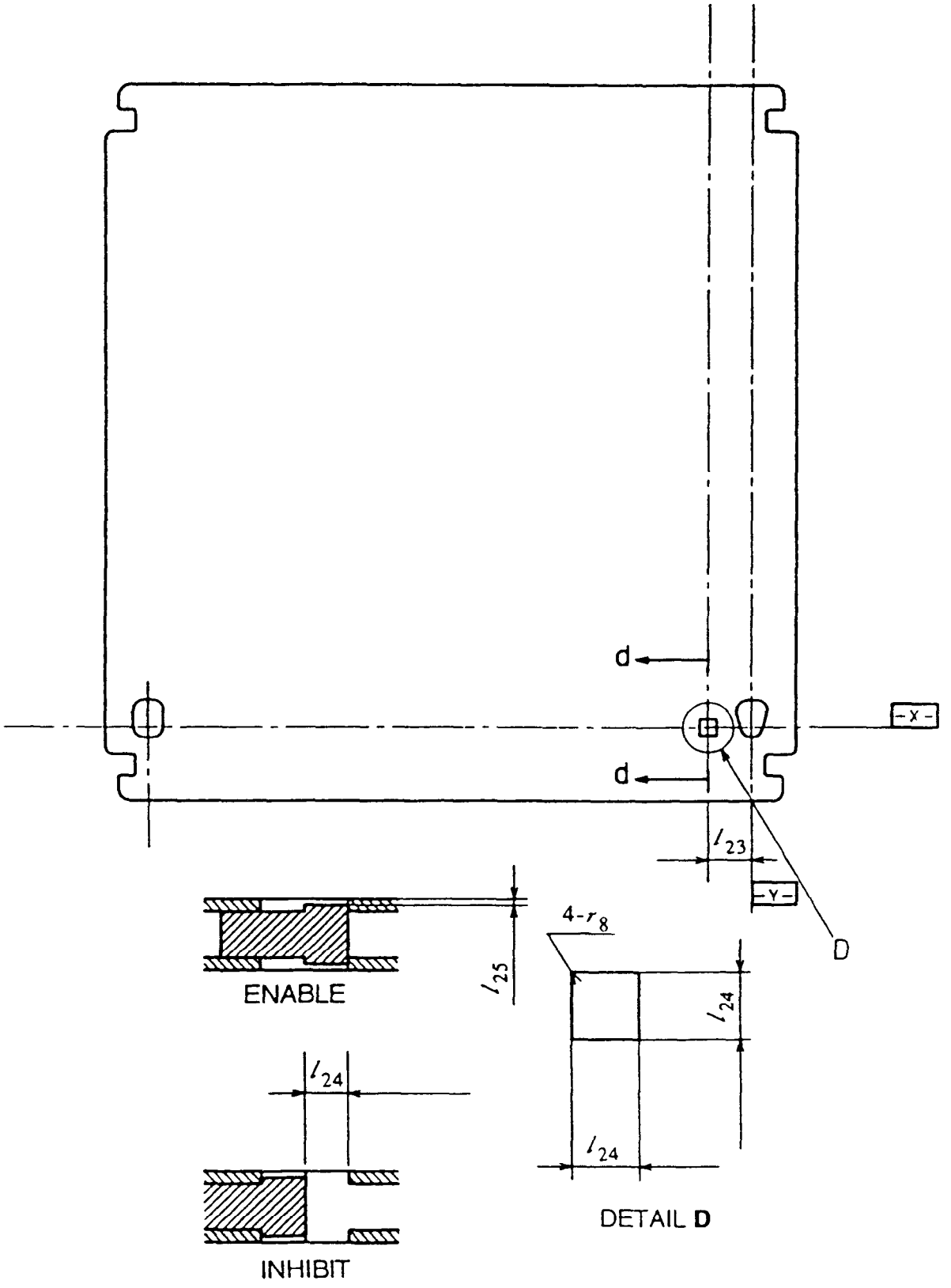

Figure 6 - Write-inhibit feature

Copyright International Organization for Standardization
Provided by IHS under license with ISO
No reproduction or networking permitted without license from IHS
Not for Resale

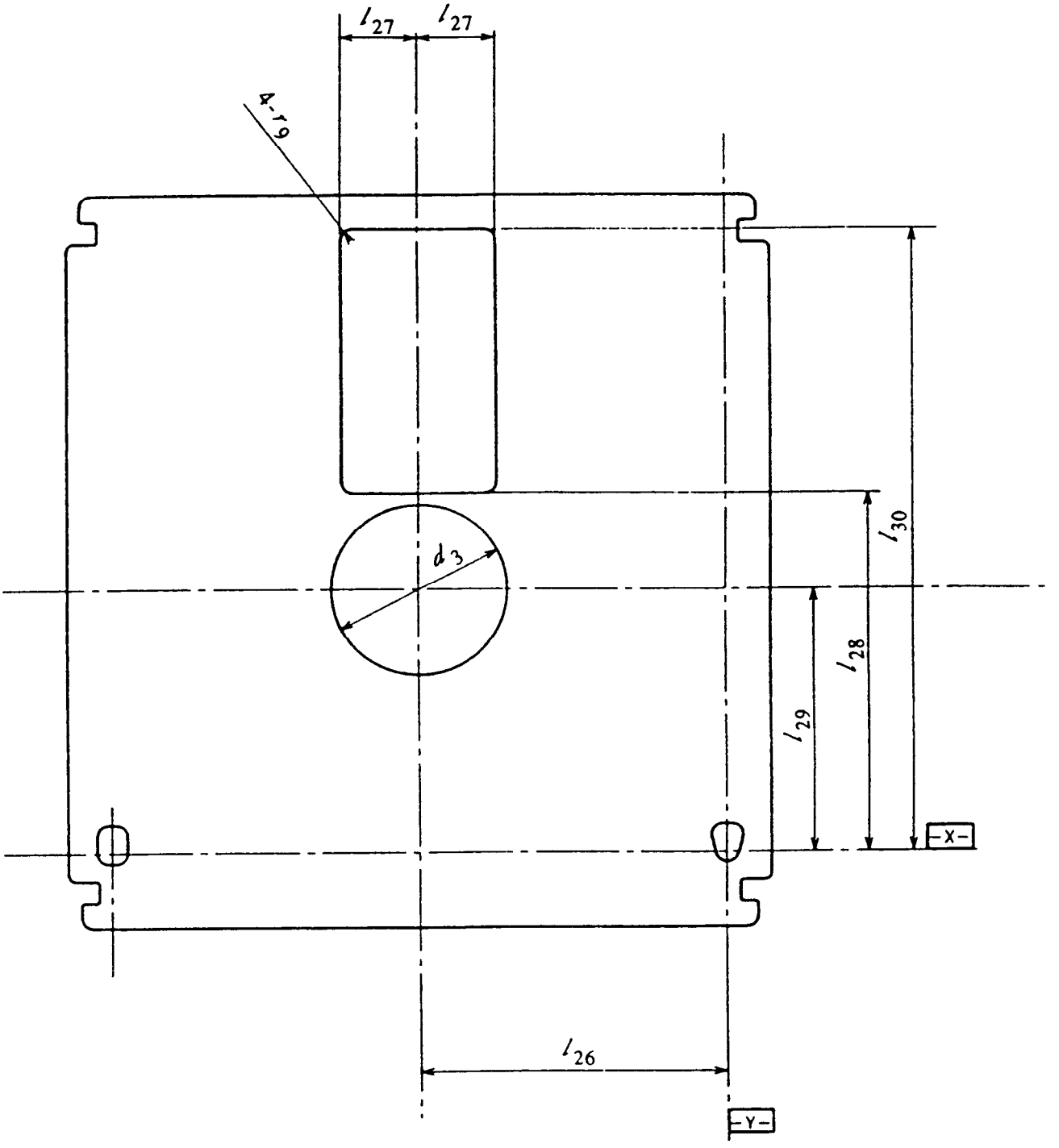

Figure 7 - Head and spindle access windows

Copyright International Organization for Standardization
Provided by IHS under license with ISO
No reproduction or networking permitted without license from IHS
Not for Resale

© ISO/IEC

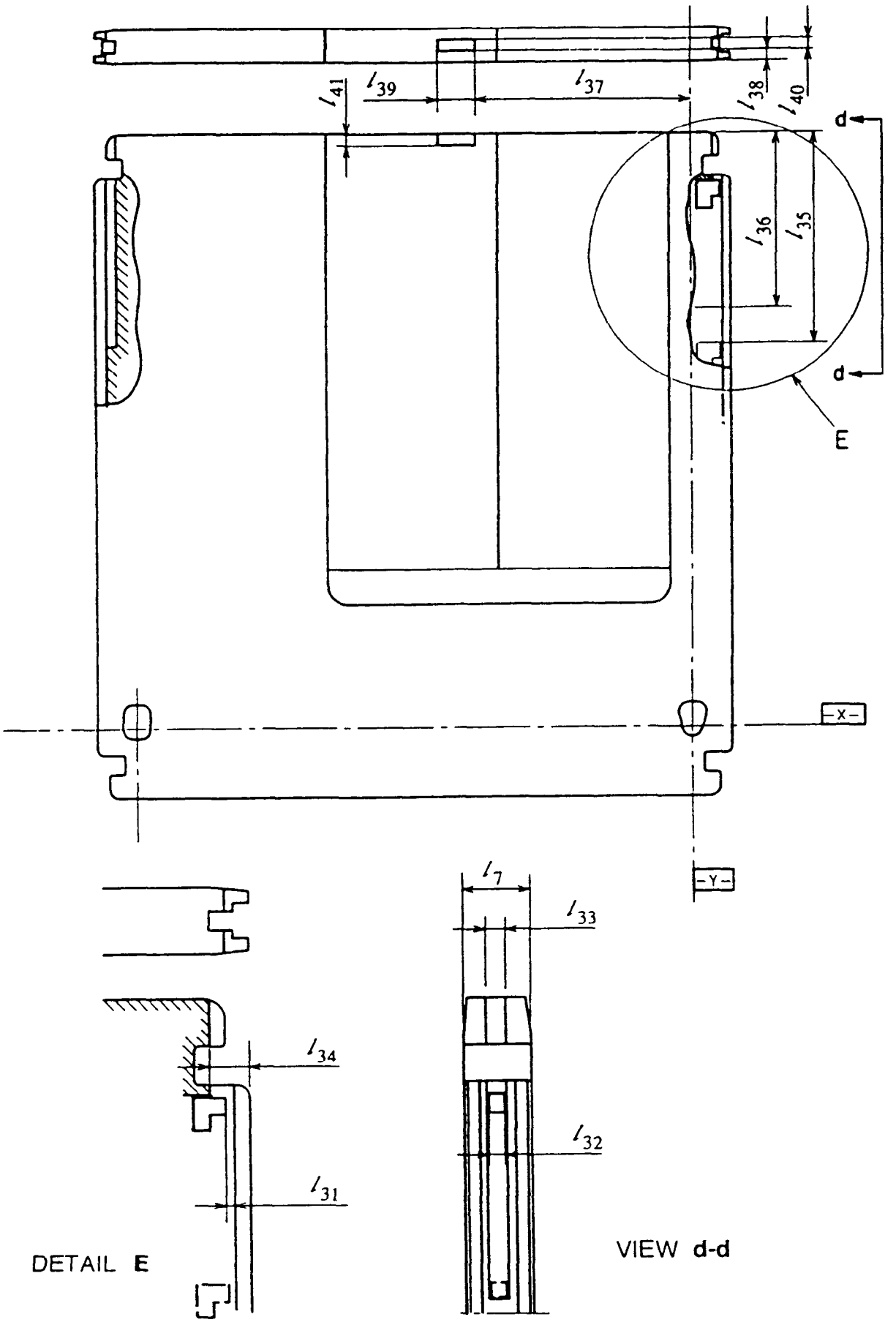

Figure 8 - Shutter and shutter opener features

Copyright International Organization for Standardization
Provided by IHS under license with ISO
No reproduction or networking permitted without license from IHS
Not for Resale

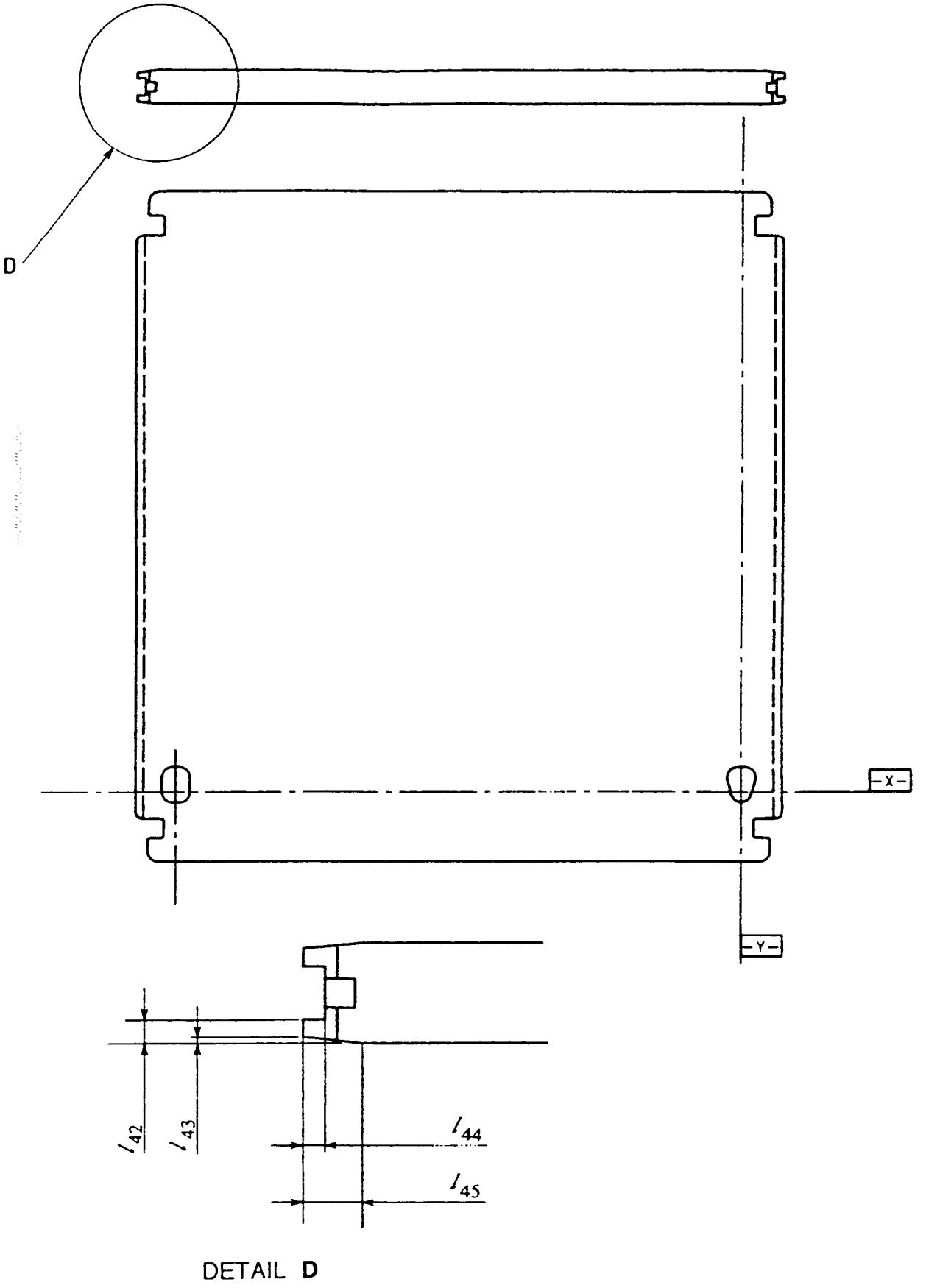

Figure 9 - Loading grooves and mis-insert protection feature

Copyright International Organization for Standardization
Provided by IHS under license with ISO
No reproduction or networking permitted without license from IHS
Not for Resale

© ISO/IEC

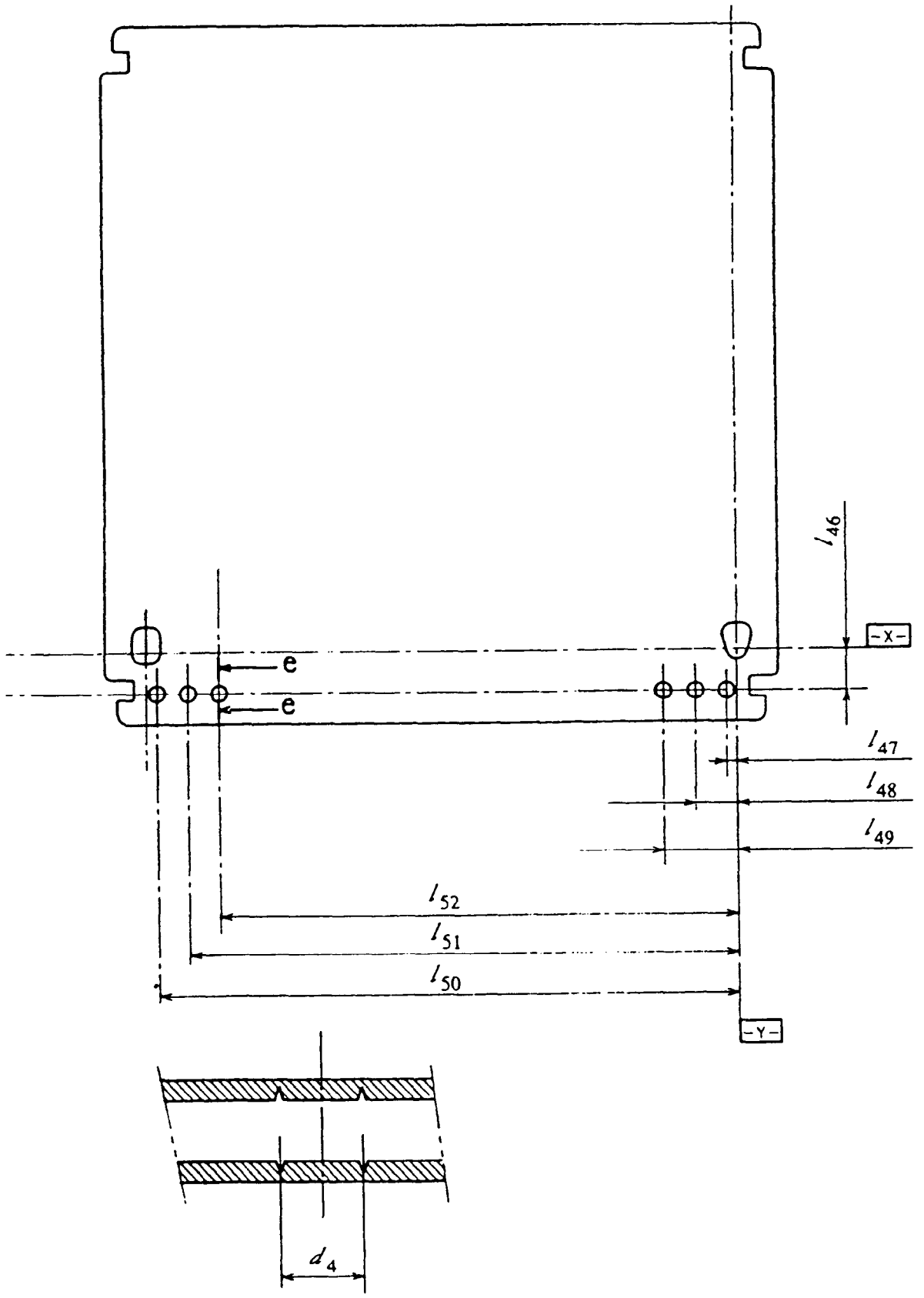

Figure 10 - Sensor holes

Copyright International Organization for Standardization
Provided by IHS under license with ISO
No reproduction or networking permitted without license from IHS
Not for Resale

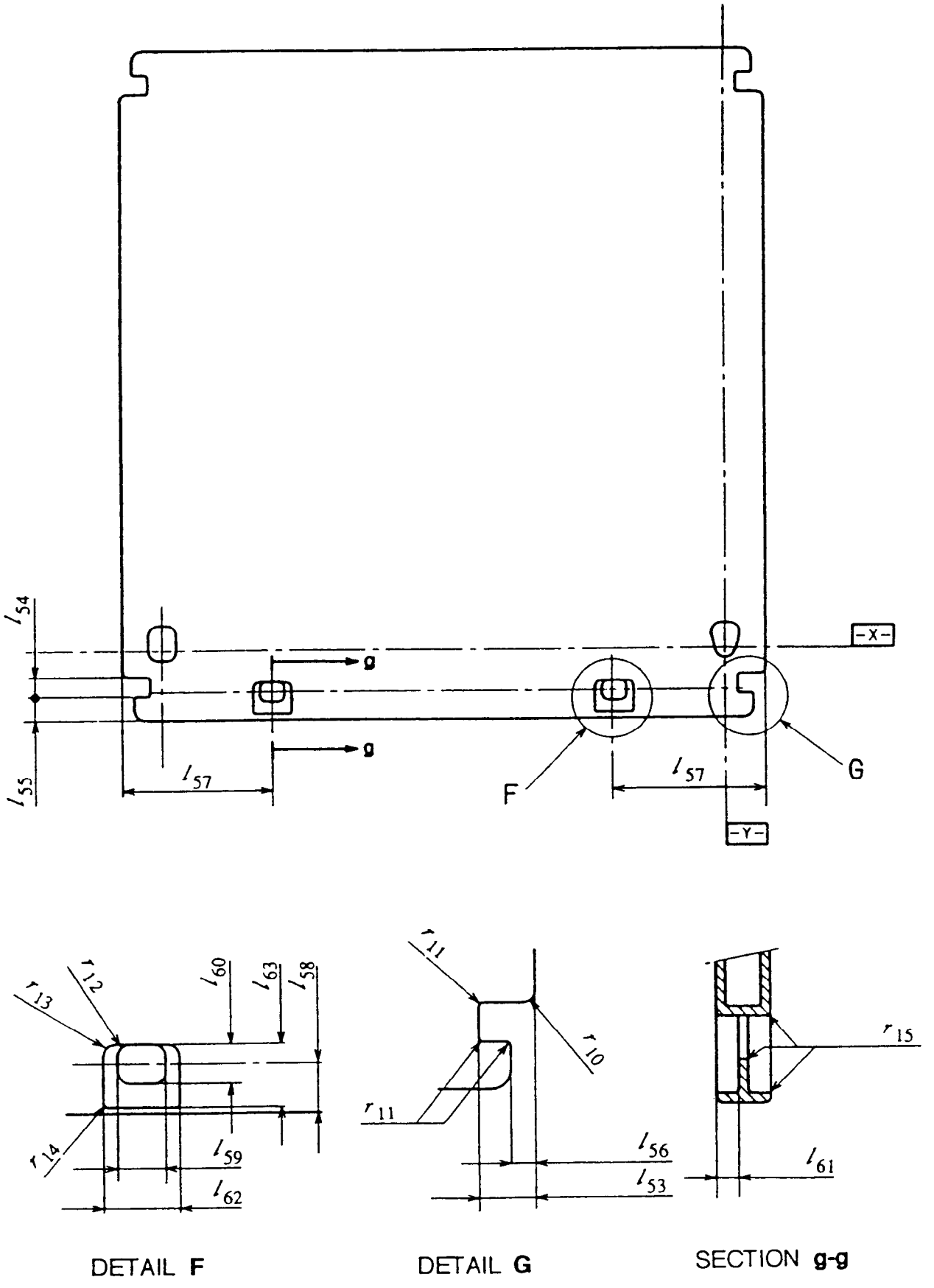

Figure 11 - Gripper features

Copyright International Organization for Standardization
Provided by IHS under license with ISO
No reproduction or networking permitted without license from IHS
Not for Resale

© ISO/IEC

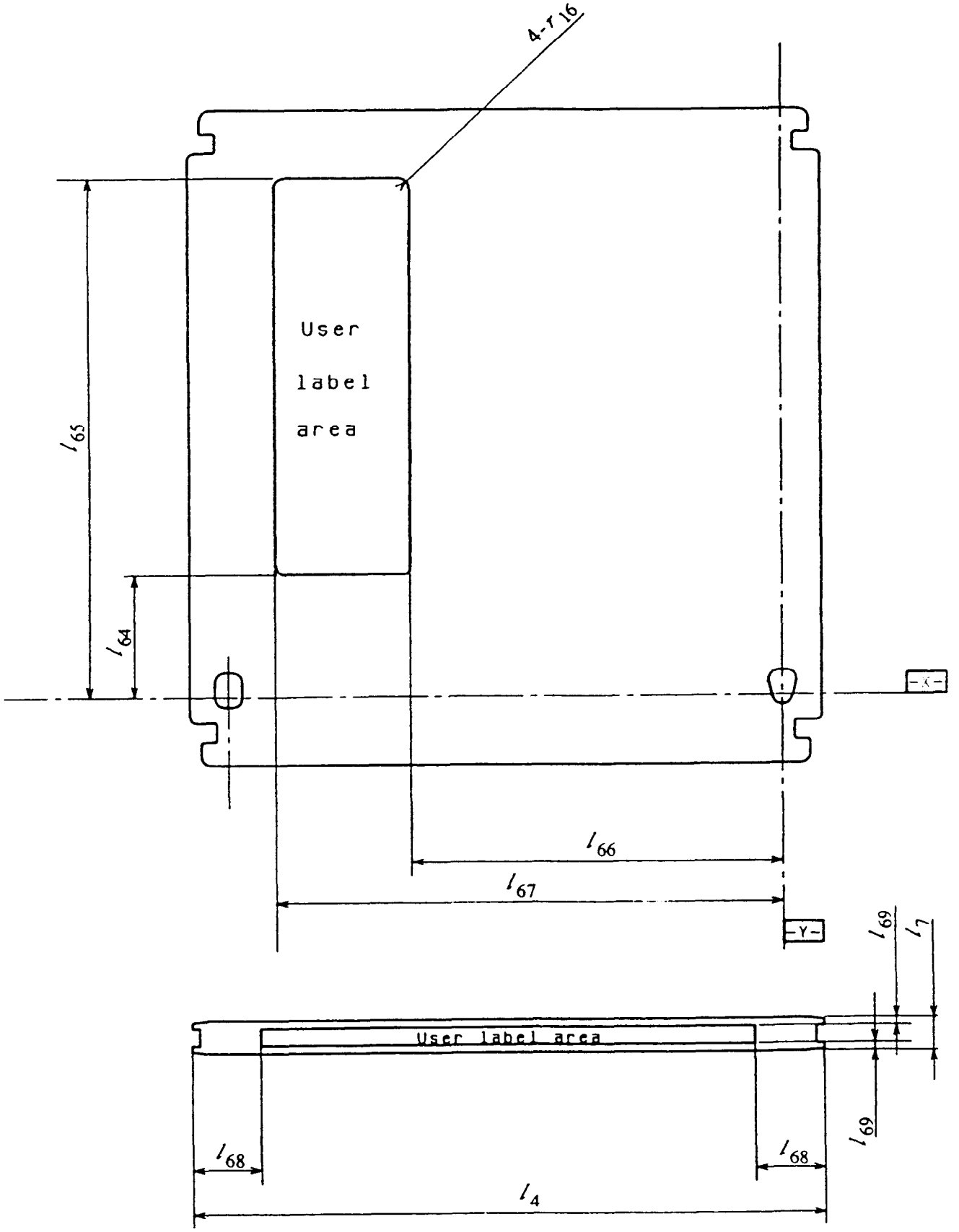

Figure 12 - Label area

Copyright International Organization for Standardization
Provided by IHS under license with ISO
No reproduction or networking permitted without license from IHS
Not for Resale

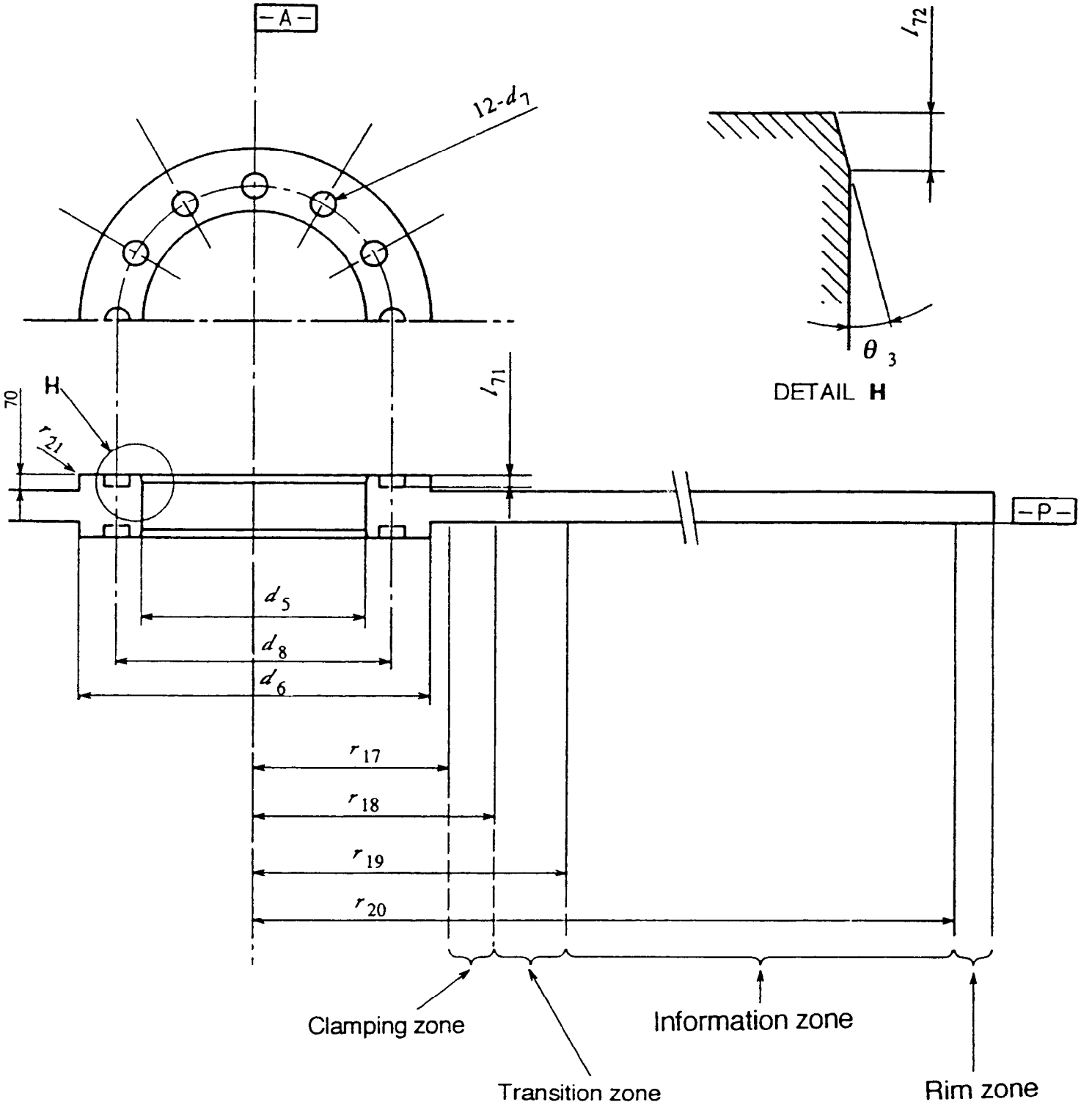

Figure 13 - Dimensions of the disk

Copyright International Organization for Standardization
Provided by IHS under license with ISO
No reproduction or networking permitted without license from IHS
Not for Resale

© ISO/IEC

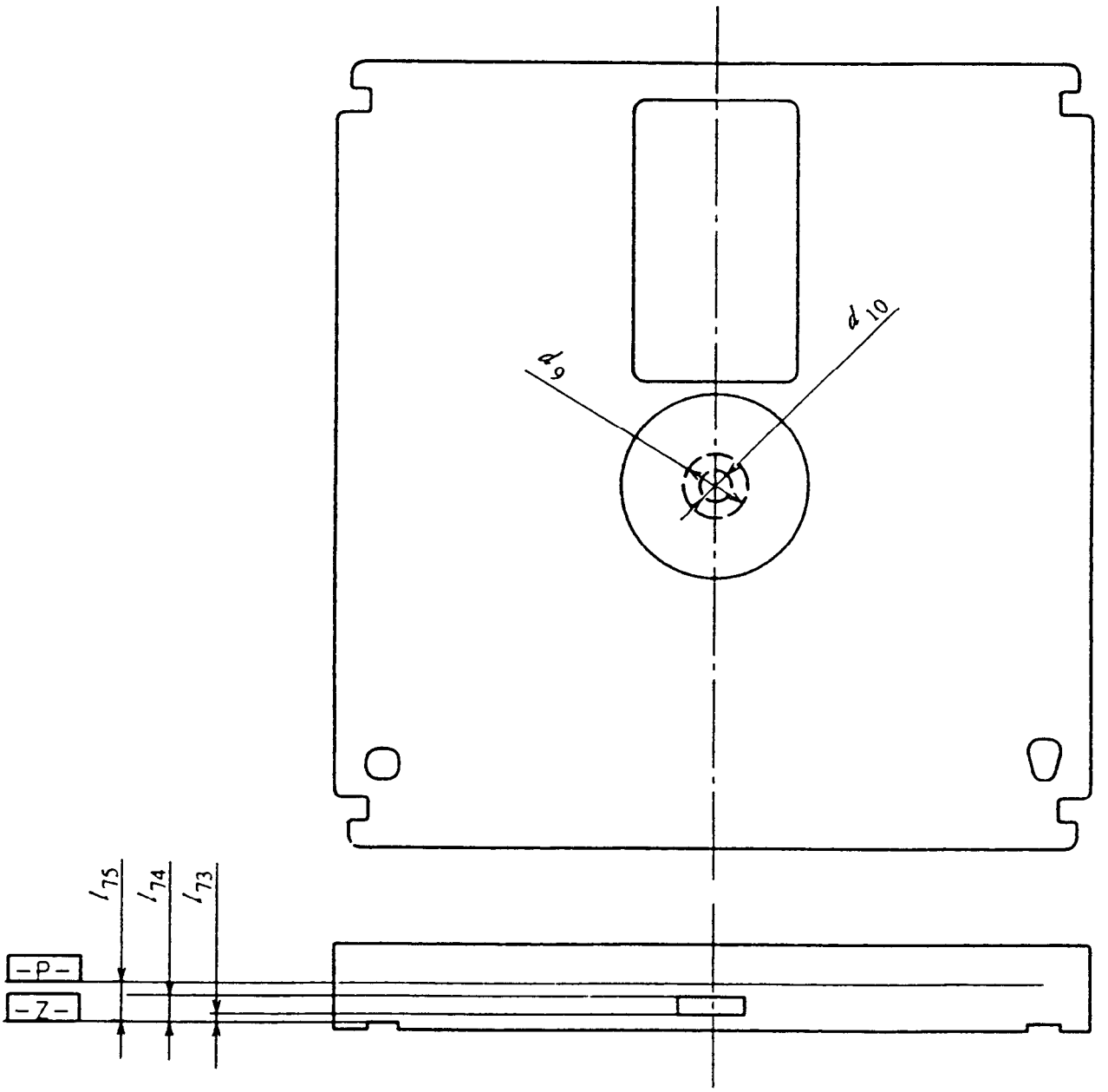

Figure 14 - Capture cylinder and disk position

Copyright International Organization for Standardization
Provided by IHS under license with ISO
No reproduction or networking permitted without license from IHS
Not for Resale

Section 3: Format of information

13 Track geometry

13.1 Track shape

The Information Zone shall contain tracks intended for the Sample Servo Format tracking method (SSF).

A track is a succession of pre-formatted marks immersed in a continuous land. These pre-formatted marks are embossed marks and possibly long parts of a groove lined up with the embossed marks. The bottoms of the pre-formatted marks are located nearer to the entrance surface than the land.

Each track shall form a 360° turn of a continuous spiral.

Sets of pre-formatted embossed marks are equally spaced around a track. In two different tracks the corresponding embossed marks are lined up with the centre of the spiral and their lengths, along the direction of the spiral, is proportional to their distances from the centre of the spiral throughout the information zone defined in 11.3.4.

13.2 Direction of rotation

The disk shall rotate accordingly as indicated by the sensor hole that identifies the side A or the side B of the case. The tracks of each side shall reside oppositely from the indicated side of the case. For the side A, the disk shall rotate counter-clockwise as viewed from the corresponding incident beam. The tracks of side A shall then spiral outward. For the side B, the disk shall rotate clockwise as viewed from the corresponding incident beam. The tracks of side B shall then spiral outward.

13.3 Track pitch

The track pitch is the distance between adjacent track centre-lines, measured in a radial direction. It shall be 1,33 µm ± 0,07 µm. The width of a band of 56390 tracks shall be 75,00 mm ± 0,40 mm.

13.4 Track number

Each track shall be identified by a track number. Track 0 shall be the first track of the Data zone. It shall be located at a radius of 66,00 mm ± 0,40 mm.

The track number of tracks located at radii larger than that of track 0 shall be increase by 1 for each track.

Copyright International Organization for Standardization
Provided by IHS under license with ISO
No reproduction or networking permitted without license from IHS Not for Resale

The track numbers of tracks located at radii smaller than that of track 0 shall be negative, and decreased by 1 for each track. Their value is given in the Address field in TWO's complement, thus track -1 is indicated by (1FFFF).

14 Track format

14.1 Track layout

A track shall contain 2048 frames. Each frame shall contain a servo-and-address field and a data area as specified in 15. The unit lengthe of the user data recorded in the data area is one Channel bit.

A sector consists of an integer number of frames and this number depends on the distance of the sector from the centre of the spiral as specified in 15.2.

The frames shall be equally spaced over a track in such a way that at track 0 the first Channel bit of a frame has an angular distance to the first Channel bit of the next frame of 360°/2048 ± 1 Channel bit.

The layout of a track is shown in figure 15.

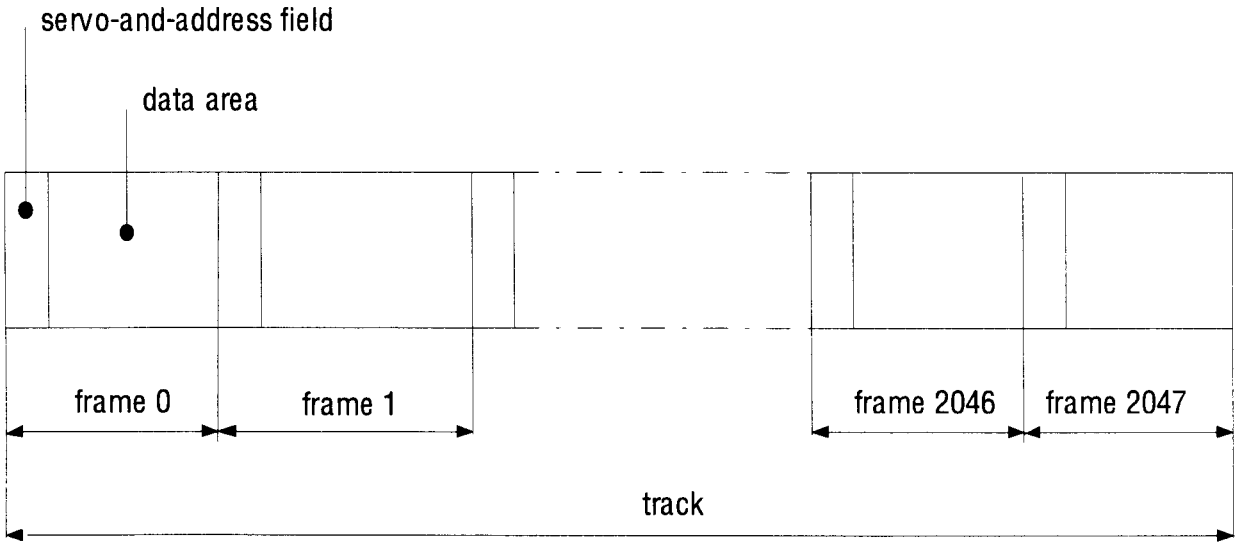

Figure 15 - Track layout

14.2 Radial alignment

The servo-and-address fields shall be radially aligned in such a way that the angular distance between the first Channel bit of data fields in adjacent tracks shall be less than ± 1 Channel bit.

Copyright International Organization for Standardization
Provided by IHS under license with ISO
No reproduction or networking permitted without license from IHS
Not for Resale

14.3 Sector number

There is no pre-formatted sector number.

15 Frame and sector format

15.1 Frame format

Every frame shall consist of a servo-and-address field, which is preformatted, and a data area to be user-written.

The unit length of the pre-formatted information is the Preformatted Information Bit (PIB). A servo-and-address field shall be 9,5-PIB long. A data field shall have a length equivalent to 118,5 PIBs and so a frame shall have a length equivalent to 128 PIBs.

15.1.1 Servo-and-address field

There shall be two types of frames according to the parity of the frame number as shown in figure 16. Information in the servo-and-address field shall be NRZ coded.

In both cases servo-and-address fields shall have the same lengths, but different contents : different servo fields and different address fields.

15.1.1.1 Address field

The address field is intended to allow the drive to access any sector.

In even numbered frames the address fields shall represent the four least significant bits (0, 1, 2 and 3) of the Gray coded address of the track, containing these frames.

In odd numbered frames the address fields shall represent the three least significant bits (0, 1 and 2) of the Gray coded address of the track and a multiplexed bit (M).

The layout of an address field is shown in figures 16a and 16b.

Copyright International Organization for Standardization
Provided by IHS under license with ISO
No reproduction or networking permitted without license from IHS Not for Resale

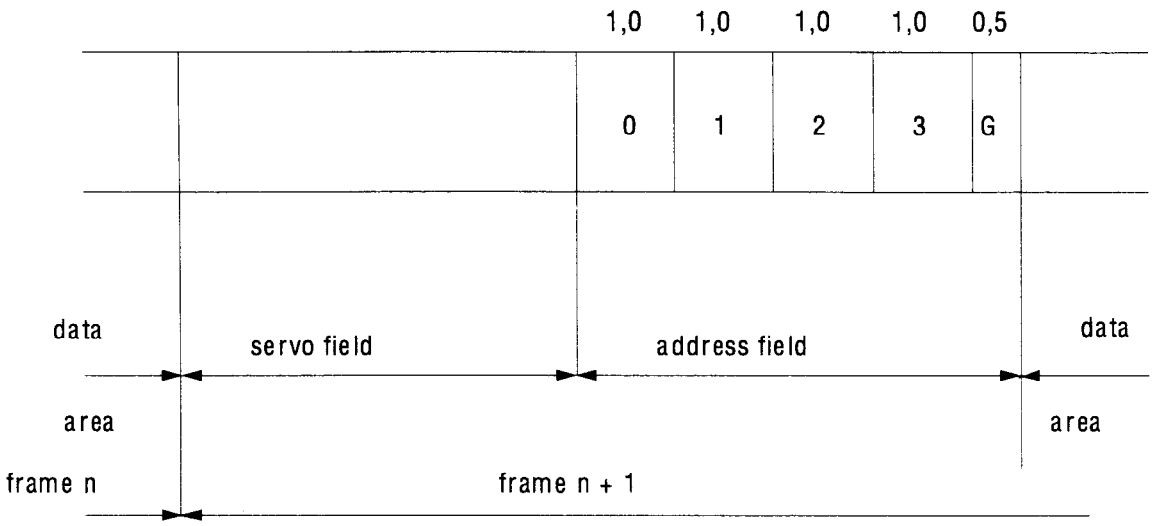

Figure 16a - Address field of an even-numbered frame

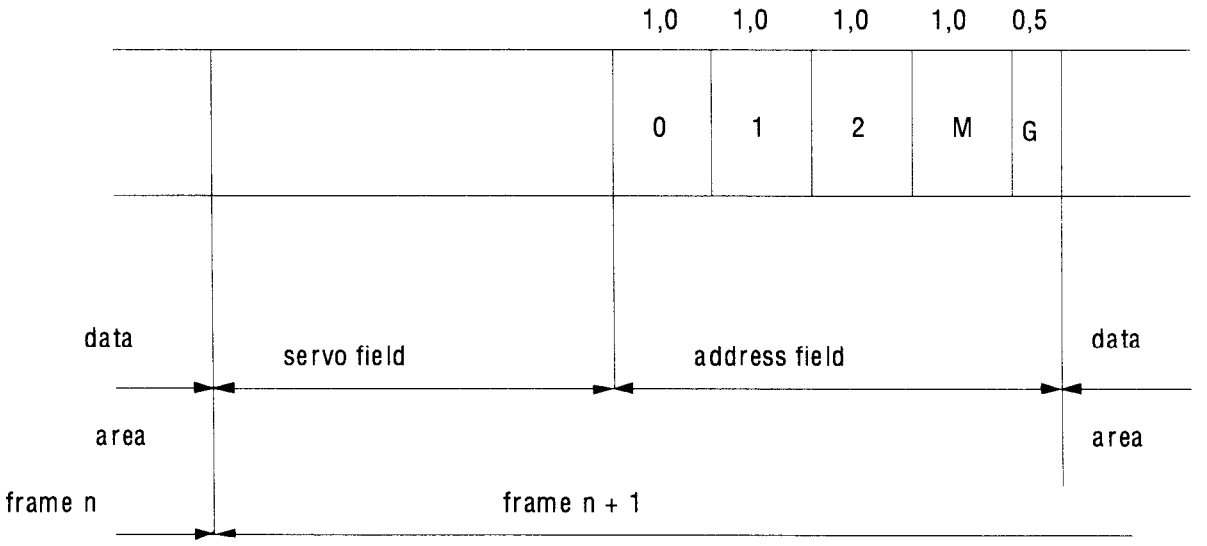

Figure 16b - Address field of an odd-numbered frame

The pre-formatted marks (0, 1, 2, 3) representing the least significant bits of the Gray coded address of the tracks shall be, each of them, one-PIB long.

The gap (G) shall be one half of a PIB long.

The multiplexed mark (M) is one PIB long.

The content of the multiplexed mark is shown in figure 17. It shall represent, every second frame, the most significant bits of the track address and the angular position on the track.

Copyright International Organization for Standardization
Provided by IHS under license with ISO
No reproduction or networking permitted without license from IHS
Not for Resale

4	5	6	7	8	9	10	11	12	13	14	15	16	R	R	R

Figure 17 - Multiplexed feature

The marks R are the angular position on the track expressed in 1/8 of a track.

15.1.1.2 Servo field

The servo field is intended to allow the drive to focus, track and generate a clock.

In even numbered frames contained in even numbered tracks and in odd numbered frames contained in odd numbered tracks the laterally displaced marks shall be displaced toward the centre of the spiral.

In even numbered frames contained in odd numbered tracks and in odd numbered frames contained in even numbered tracks the laterally displaced marks shall be displaced outward.

The layout of the servo field is shown in figure 18.

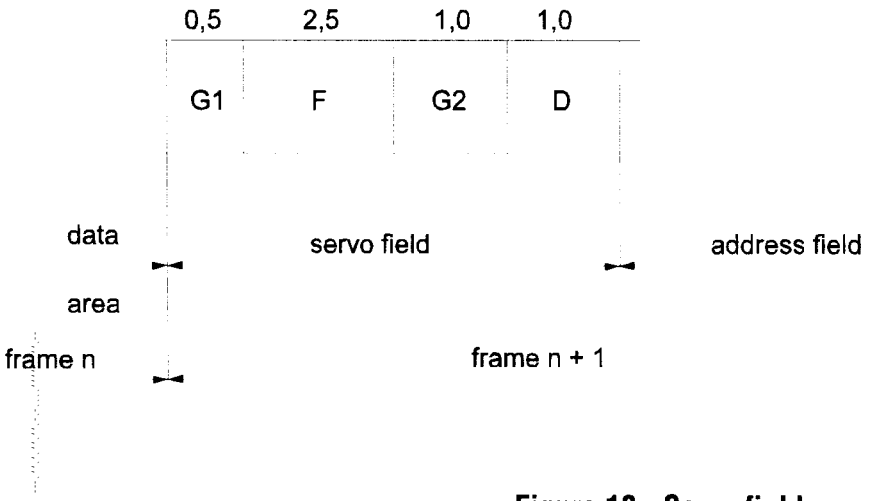

Figure 18 - Servo field

The first gap (G1) and the second gap (G2) shall be in a pit state.

The focusing area F shall be in a land state. Its length is a unique distance. Its edges are the clock generating marks. Mark D is the laterally displaced mark used for the radial tracking.

Copyright International Organization for Standardization
Provided by IHS under license with ISO
No reproduction or networking permitted without license from IHS
Not for Resale

15.1.2 Data area

The layout of the data area of every frame, except the first frame of every sector, is shown in figure 19.

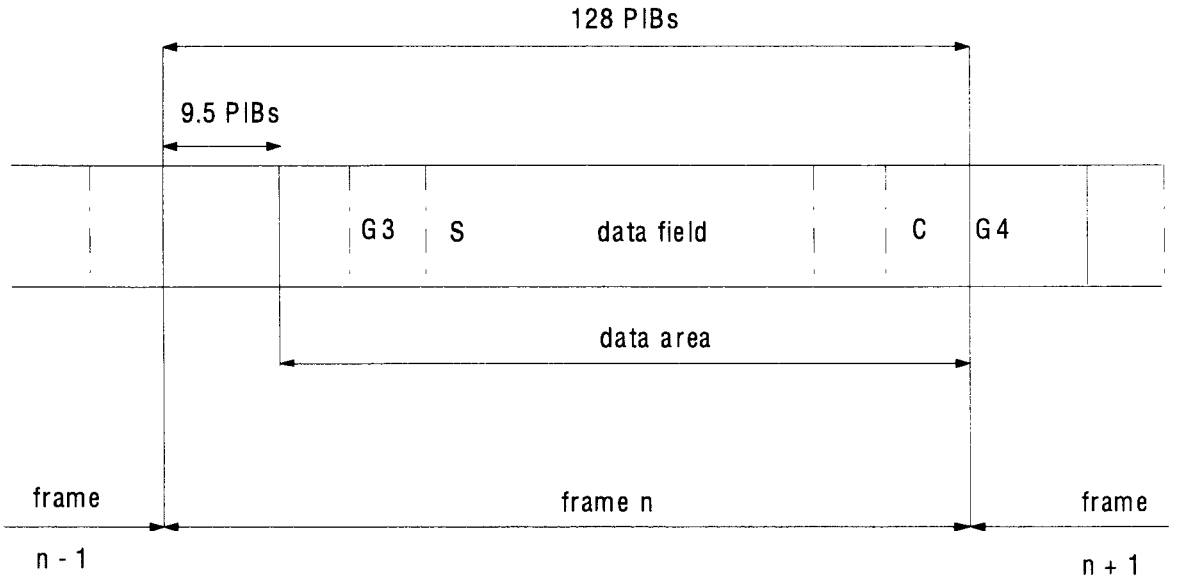

Figure 19 - Data area

15.1.2.1 Gaps

In every data area the first edge of the user-written information shall be at least at a distance of 0,5 PIB (G3) from the end of the servo-and-address field. In every data area the last edge of the user-written information shall be at least at a distance of 0,5 PIB (G4) from the beginning of the next servo-and-address field.

15.1.2.2 Starting pattern

The user-written information shall begin with a starting pattern (S) consisting of a 101010... 101 pattern, which ends immediately after a distance of 2,5 PIBs from its beginning and is followed by the pattern 001.

15.1.2.3 Closure pattern

The user-written information shall end with the closure pattern (C) consisting of a pattern of 12 channel bits. It allows closure of the last byte of data as required by the (1,7) recording code (see clause 16) and also allows closure of the pwm modulation to a non-mark manner.

Copyright International Organization for Standardization
Provided by IHS under license with ISO
No reproduction or networking permitted without license from IHS
Not for Resale

15.1.2.4 Data field (see figure 19)

The data field shall contain the user data bytes (see clause 15.2.4).

15.1.3 Physical representation of the marks

The disk may have in the information zone long parts of a groove or not (see clause 13.1).

For both cases the physical representation of the marks is respectively shown in figures 20a and 20b.

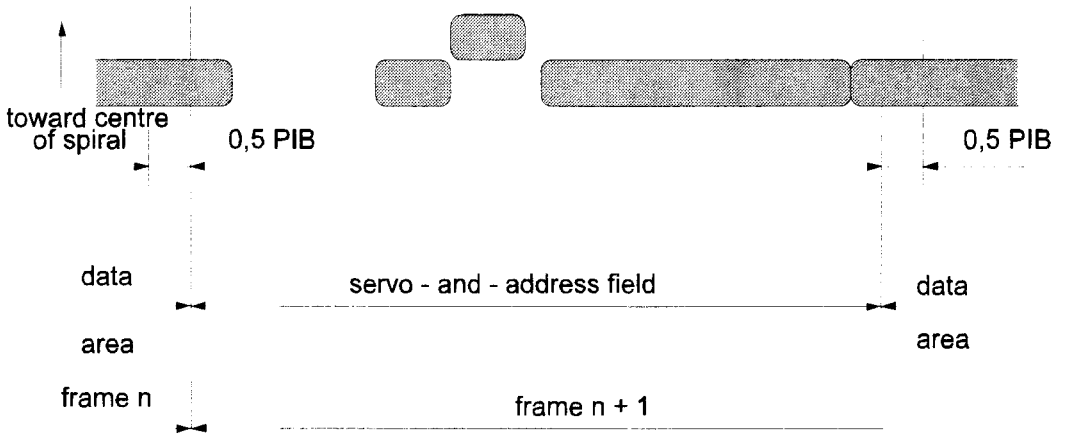

Figure 20a - Disk with long part of a groove. Even track. Even frame

Copyright International Organization for Standardization
Provided by IHS under license with ISO
No reproduction or networking permitted without license from IHS
Not for Resale

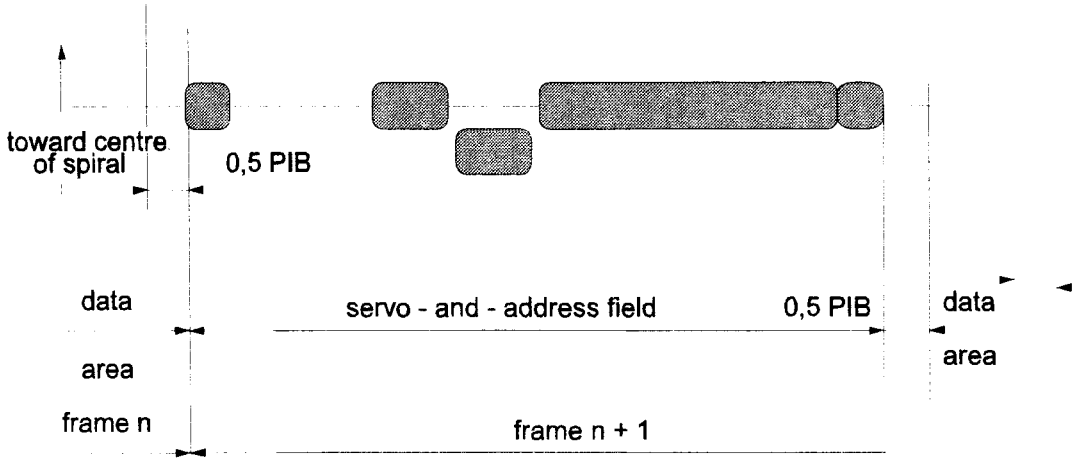

Figure 20b - Disk without groove. Even track. Odd frame

15.2 Sector format

A sector shall consist of an integer number of frames. The first frame of a sector shall be as shown in figure 21. The other frames shall be as shown in figure 19.

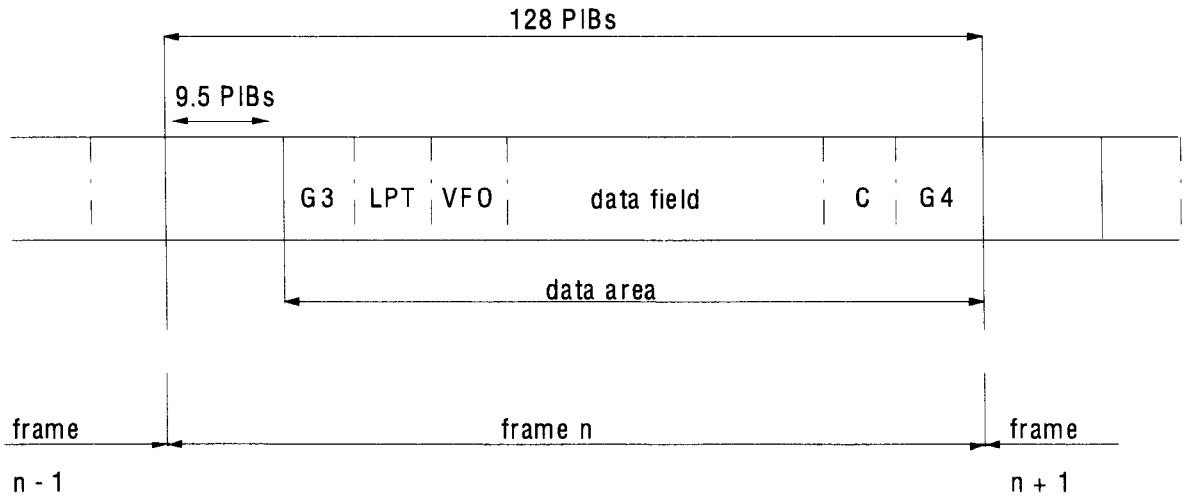

Figure 21 - First frame of a sector

Copyright International Organization for Standardization
Provided by IHS under license with ISO
No reproduction or networking permitted without license from IHS
Not for Resale

15.2.1 Gaps

There shall be two gaps one at the beginning of the data area (G3), the other one at the end (G4) (see clause 15.1.2.1).

15.2.2 Laser Power Test field

The Laser Power Test field is intended to allow the drive to test the laser power level. Its content is not specified and shall be ignored in interchange. This field shall have a length of 48 channel bits.

15.2.3 VFO field

There shall be one VFO at the beginning of every sector to give the Voltage-Frequency-Oscillator of the phase-locked loop of the read channel Channel bit synchronization. The information in the VFO shall be a pattern : 101010 ... 10101001. Its length is 2,5 PIBs plus 96 Channel bits (S) (see clause 15.1.2.2, except for its total length).

15.2.4 Data field

The Information zone is logically split in bands. Inside a band the angular density of user-written data is a constant, but from band to band this density increases from the inner part to the outer part of the Information zone. So the content of the data fields, in terms of data, increases from the inner part to the outer part of the Information zone, while the number of frames needed to contain one sector decreases.

At radii in the range 64,0 mm to 65,1 mm a sector shall be contained in 31 frames and at radii in the range 139,5 mm to 142,00 mm in 14 frames.

The number of frames needed to contain one sector shall be decreased by one from band to band ; this shall occurs at radii (in mm) : 65,1 - 67,3 - 69,7 - 72,3 - 75,1 - 78,1 - 81,4 - 84,9 - 88,8 - 93,0 - 97,6 - 102,8 - 108,5 - 114,9 - 122,0 - 130,2 - 139,5.

The data fields of a sector shall have a useful length of 1190 bytes and shall comprise the following data :

6 bytes of address data (twice the logical sector address),
1024 bytes of user data,
160 bytes of ECC parity.

16 Recording code

The 8-bit bytes in the Data field shall be converted to Channel bits on the disk according to Table 1. All other fields in a sector have already been defined in terms of either PIBs or channel bits. Each ONE Channel bit shall be recorded as an inversion between absence and presence of a mark produced by a write pulse of the appropriate power and width.

The recording code used to record all data in the Data fields of the Information zone on the disk shall be the run-length limited code known as RLL (1,7).

Copyright International Organization for Standardization
Provided by IHS under license with ISO
No reproduction or networking permitted without license from IHS Not for Resale

Table 1 - Conversion of input bits to Channel bits

Input bits	Channel bits
01	x00
10	010
11	x01
0001	x00001
0010	x00000
0011	010001
0000	010000

x indicates inverted value to the value of preceding Channel bit

The coding shall start at the first bit of the first byte of the field to be converted.

17 format of the information zone

17.1 General description of the Information Zone

The Information zone defined in 11.3.4 contains all information on the disk relevant for data interchange. The information comprises embossed pre-formatted marks for tracking, clock generation and access, possibly long parts of a groove, and, possibly, user-written data.

In this clause, the term "data" is reserved for the content of the data field of a sector, which, in general, is transferred to the host. This section defines the layout of the information; the characteristics of signals obtained from this information are specified in sections 4 and 6.

17.2 Division of the Information zone

The Information zone is divided in three parts: a Lead-in Zone, a Data Zone and a Lead-out Zone. The Data Zone is intended for writing user data. The Lead-in and Lead-out Zones contain control information for the drive and zones for performing tests by the manufacturer or user.

Copyright International Organization for Standardization
Provided by IHS under license with ISO
No reproduction or networking permitted without license from IHS Not for Resale

Table 2 - Layout of the Information zone

	Track number		Radius (mm)	
	from	to	from	to
Lead-in Zone				
PEP Control Zone	-	-	64,000	65,500
Inner SFP Control Zone	-375	-339	65,500	65,550
System Zone	-338	-226	65,550	65,700
Inner Test Zone				
for manufacturer	-225	-113	65,700	65,850
for user	-112	-1	65,850	66,000
Data Zone	0	56390	66,000	141,000
Lead-out Zone				
Outer Test Zone				
For user	56391	56503	141,000	141,150
For manufacturer	56504	56616	141,150	141,300
Outer SFP Control Zone	56617	56654	141,300	141,350
Buffer Zone	56655	57142	141,350	142,000

The radii of a zone in the table are the nominal values of the radius of the centre of the first track and of the radius of the centre of the last track of the zone.

The division of the Information Zone shall be as given in table 2. The tolerance on the inner and outer radii of the Information Zone is specified in 11.3.3 and 11.3.4; the tolerance on the inner radius of the Data zone is specified in 13.4; the

tolerance on other radii is determined by the tolerance on the track pitch as specified in 13.3.

Note : An address is a distance from an origin - track 0, frame 0 - expressed as a number of frames. It can be expressed in terms of track number and frame number, the frame number being in the range 0 - 2047. In table 2 only the track number is provided, so the address is a rounded value.

17.2.1 PEP Control Zone

The PEP Control Zone can be read without radial tracking servo. The PEP Control Zone shall contain embossed preformatted marks for tracking, clock generation and access, but no long parts of a groove. In the data areas of the pre-formatted marks the embossed information shall be in phase-encoded modulation. The marks in all tracks of the PEP Control Zone shall be radially aligned, so as to allow information recovery from this zone without radial tracking being established by the drive.

The PEP Control Zone is intended to enable a future drive to distinguish a disk in conformance with this Standard from a future standardized disk.

Copyright International Organization for Standardization
Provided by IHS under license with ISO
No reproduction or networking permitted without license from IHS Not for Resale

Recording method, track format, sector format and data contents of the PEP Control Zone are specified in annex F.

Signals from PEP Control Zone are described in clause 24.

17.2.2 System Zone

There shall be a system zone. The system zone shall contain embossed pre-formatted marks for tracking, clock generation and access and possibly long parts of a groove.

The system zone is intended for any use by the drive controller.

17.2.3 Test Zones

There shall be an Inner Test Zone and an Outer Test Zone. The test zones shall contain embossed pre-formatted marks for tracking, clock generation and access, possibly long parts of a groove, but no embossed data.

The Test Zone for the user is intended for tests to enable a drive to set its write power. The tracks used for testing should be chosen from the zone in a random way, so as to ensure a gradual degradation of the entire zone due to use. Then each track in this zone will remain representative for the characteristics of tracks in the Data zone of the disk.

The Test Zone for the manufacturer is intended for quality tests by the media manufacturer. The Test zone for user shall not be used for such tests, as they can cause serious degradation of the zone.

17.2.4 SFP Control Zones

There shall be an Inner SFP Control Zone and an Outer SFP Control Zone. Each SFP Control Zone shall contain embossed pre-formatted marks for tracking, clock generation and access and , possibly in the post-written part of the SFP (see Annex G), long parts of a groove according to clause 15. The Data fields of all sectors in the two SFP Control zones shall be identical and contain control data for the drive, which is a set of nominal values for the disk, in the embossed part of the SFP, and a set of values which is specific for the disk in use, in the post-written part of the SFP (see Annex G). Part of the information is required for setting the Reference Drive used for testing conformance to this Standard. Another part of the information is intended for user drives to optimize their performance. The Control data in a Data field is specified in Annex G.

Copyright International Organization for Standardization
Provided by IHS under license with ISO
No reproduction or networking permitted without license from IHS Not for Resale

17.2.5 Data Zone

The Data Zone shall contain embossed pre-formatted marks for tracking, clock generation and access and possibly long parts of a groove. The Data fields shall be user-written data, in the format of clause 15. The layout of the Data zone is specified in clause 18.

17.2.6 Buffer Zone

The Buffer Zone shall contain embossed pre-formatted marks for tracking, clock generation and access and possibly long parts of a groove.

18 Format of the data zone

The Data Zone shall contain two areas to be user-written : one at the beginning of the zone and the other one at the end.

In the centre of the zone there shall be a relocation zone intended to relocate bad sectors of the Data Zone.

These zones have the following positions :

Inner Data Zone :	track 0 to track 20284
Relocation Zone:	track 20285 to track 20636
Outer Data Zone :	track 20637 to track 56390.

19 Defect management

Defective sectors in the Data Zone shall be replaced by good sectors according to the defect management scheme described below. Defective sectors shall be handled by a Hash Code replacement Algorithm (HCA) (see clause 19.1 and annex D). The total number of defective sectors shall not be greater than 16384.

19.1 Hash Code replacement Algorithm

This replacement algorithm allows, by simple calculation and with an eventual iterative process, to assign a spare sector for relocating the defective sector.

This replacement algorithm is defined in annex D.

19.2 Write procedure

If during or after writing a data sector is found to be defective, it shall be rewritten in the sector assigned by the HCA.

Copyright International Organization for Standardization
Provided by IHS under license with ISO
No reproduction or networking permitted without license from IHS Not for Resale

Section 4: Characteristics of embossed pre-formatted information

20 Method of testing

The format of the embossed pre-formatted information on the disk has been defined in the previous clauses 13 to 18. The following clauses 21 to 23 specify the signals from this embossed pre-formatted information, as obtained in the Reference Drive defined in clause 7.

Clauses 21 to 23 specify only the average quality of this embossed information. Local deviations from the specified values, called defects, can cause tracking errors, erroneous adresses or errors in the Data fields. These errors are covered by section 6.

20.1 Environment

All signals in clauses 21 to 23 shall be within their specified ranges with the cartridge in any environment in the range of allowed operating environments defined in 8.1.2.

20.2 Reference Drive

All signals specified in clauses 21 to 23 shall be measured in the indicated channels of the Reference Drive. The drive shall have the following characteristics for the purpose of these tests.

20.2.1 Optics and mechanics

The focussed optical beam shall have the properties defined in clause 9.2 a to e. The disk shall rotate as specified in 9.5.

20.2.2 Read power

The optical power incident on the entrance surface of the disk and used for reading the information shall be in the range from 0,5 mW to P_{max}. P_{max} shall be as specified below.

a) PEP Control Zone

The read power shall not exceed 0,7 mW.

b) SFP Control Zone

The read power shall not exceed the value given in byte 6 of the PEP Control Zone.

--`,,```,,,,````-`-`,,`,,`,`,,`---
Copyright International Organization for Standardization
Provided by IHS under license with ISO
No reproduction or networking permitted without license from IHS
Not for Resale

c) The other zones

The read power shall not exceed the value given in byte 21 of the SFP Control Zone.

20.2.3 Read channel

The drive shall have a read channel, in which the total amount of light in the exit pupil of the objective lens is measured. This channel can have the implementation as given by Channel 1 in clauses 9.1 and 9.3.

20.2.4 Tracking

During the measurement of the signals, the focus of the optical beam shall have an axial deviation of not more than

e_{max}(axial) =± 1,0 µm

from the recording layer, and it shall have a radial deviation of not more than

e_{max}(radial) = ± 0,10 µm

from the centre of a track.

20.3 Definition of signals

All signals are linearly related to currents through a photo-diode detector, and are therefore linearly related to the optical power falling on the detector.

All signals are defined in clause 9 and figure 1.

Copyright International Organization for Standardization
Provided by IHS under license with ISO
No reproduction or networking permitted without license from IHS Not for Resale

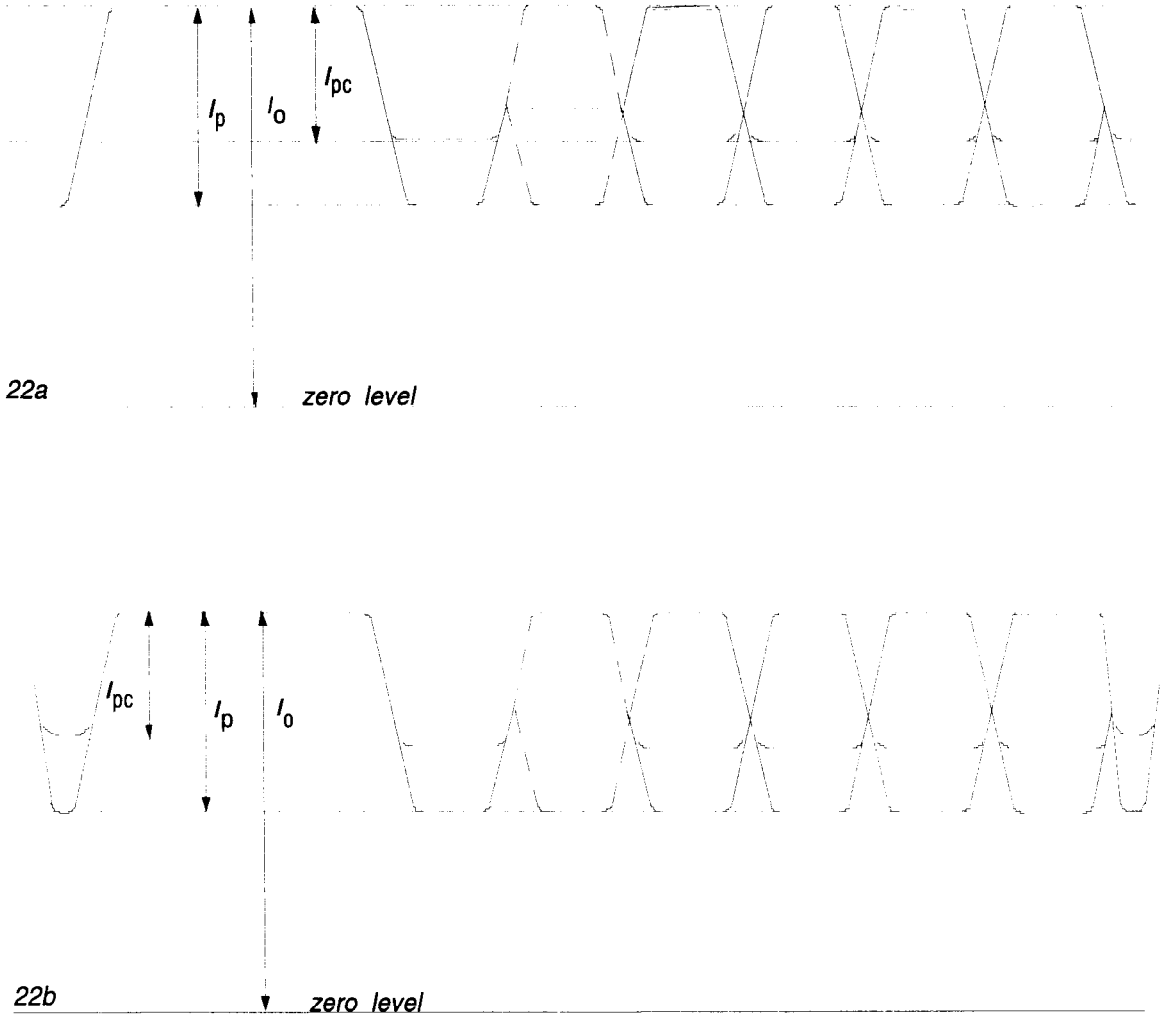

Figure 22 - Signals from the servo-and-address field

21 Signals from grooves

The shape of the grooves, if any, and the embossed information shall be such that the following requirements are met.

21.1 Phase depth

The phase depth of the grooves should be at best 180°.

21.2 Track location

The tracks are located at those radii on the disk where the radial tracking signal equals zero.

Copyright International Organization for Standardization
Provided by IHS under license with ISO
No reproduction or networking permitted without license from IHS
Not for Resale

22 Signals from servo-and-address fields

The signals obtained from the embossed Servo-and-address fields shall be measured in Channel 1 of the Reference Drive.

The signal from an embossed mark in the recording layer is defined as the peak-to-peak value of the modulation in the detector current in the sum channel caused by the mark when the beam follows a track.

The displacement of the embossed marks in the Servo-and-address field from their intended position relative to the start of the Servo-and-address field shall not exceed 0,1 Channel bit.

All signals are shown in figure 22a in the case of a disk with long parts of a groove and in figure 22b in the case of a disk without groove.

The signal I_p of the marks, except for the laterally displaced marks, when the focus is on track, and the signal Ipc of the marks when the focus is at mid distance between two tracks shall meet the requirement

$$I_{pc} / I_p > 0,6.$$

23 Signals from embossed data fields

In the embossed part of the SFP Control zone, the Data field of all frames shall contain embossed marks. The signals from these marks as read in Channel 1 shall be as follows.

The signal I_d from marks in the Data fields of the embossed part of the SFP Control zone shall meet the requirements

The last requirement applies over any Data field. I_{dmin} and I_{dmax} are the signals with minimum and maximum amplitude in the Data field of a sector.

$$|I_d| / |I_0| \geq 0,25$$

$$I_{dmin} / I_{dmax} \geq 0,5$$

The last requirement applies over any Data field $/d_{min}$ and $/d_{max}$ are the signals with minimum and maximum ampliture in the Data field of a sector.

Acceptable defects of the marks are specified in section VI.

24 Signals from pep control zone

The cross-track loss shall meet the requirement

Copyright International Organization for Standardization
Provided by IHS under license with ISO
No reproduction or networking permitted without license from IHS Not for Resale

The signal $/_m$ is the maximum ampliture in a group of three successive marks. $/_{mmax}$ is the maximum value and $/_{mmin}$ is the minimum value of $/_m$ obtained over one revolution. $/_{mmax}$ shall be greater tha 0,4. The effect of defects shall be ignored.

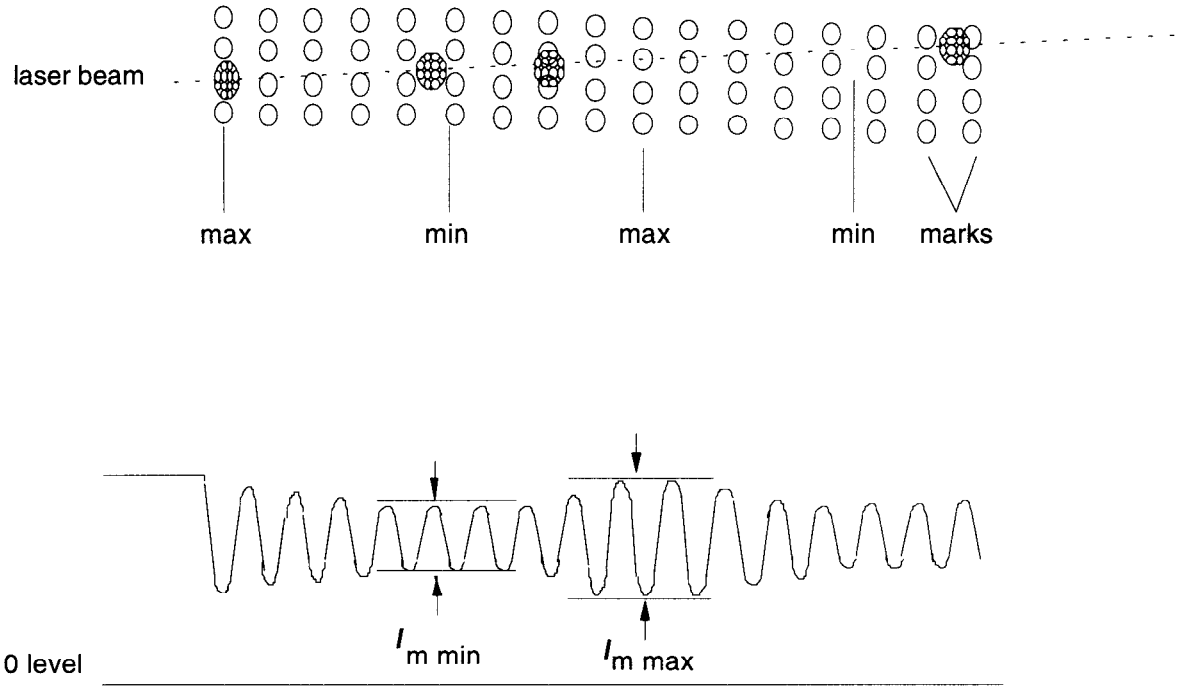

Figure 23 - Path of the laser beam when crossing track and the resulting PEP signal

Section 5: Characteristics of the recording layer

25 Method of testing

Clauses 26 and 27 describe a series of tests to assess the properties of the recording layer, as used for writing data. The tests shall be performed only in the Recording field of the sectors. The write and read operations necessary for the tests shall be made on the same Reference Drive.

Clauses 26 and 27 specify only the average quality of the recording layer. Local deviations from the specified values, called defects, can cause write problems. These defects are covered by section 6.

Copyright International Organization for Standardization
Provided by IHS under license with ISO
No reproduction or networking permitted without license from IHS
Not for Resale

25.1 Environment

All signals in clauses 26 and 27 shall be within their specified ranges with the cartridge in any environment in the range of allowed operating environment defined in 8.1.2., unless otherwise specified.

25.2 Reference Drive

The write test described in clauses 26 and 27 shall be measured in Channel 2 of the Reference Drive. The drive shall have the following characteristics for the purpose of these tests.

25.2.1 Optics and mechanics

The focussed optical beam shall have the properties defined in 9.2. The disk shall rotate as specified in 9.5.

25.2.2 Read power

The optical power incident on the entrance surface of the disk and used for reading the information shall be in the range from 0,5 mW to P_{max}.

25.2.3 Read channel

The Reference Drive shall have a read channel which can detect marks in the recording layer. This channel shall have an implementation equivalent to that given by Channel 2 in 9.3.

25.2.4 Tracking

During the measurement of the signals, the focus of the optical beam shall follow the tracks as specified in 20.2.4.

25.3 Write conditions

Marks are written on the disk by pulses of optical power.

25.3.1 Write pulse

The shape of the write pulse shall be as given in figure 24.

Copyright International Organization for Standardization
Provided by IHS under license with ISO
No reproduction or networking permitted without license from IHS Not for Resale

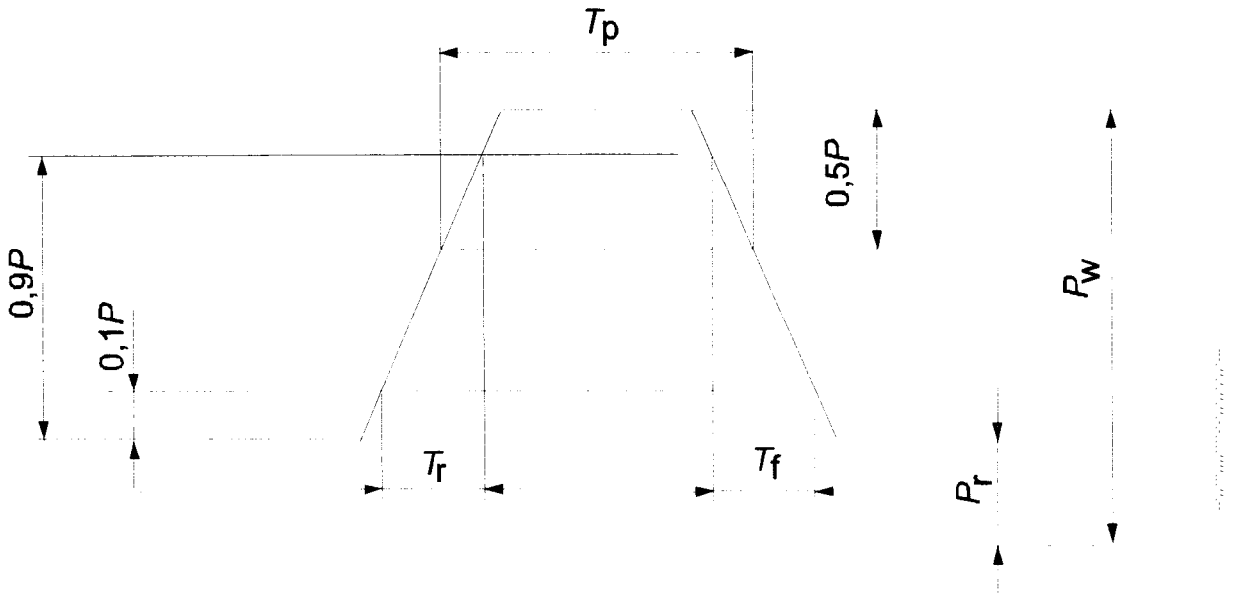

P_w: write power
P_r: read power
T_r: rise time
T_f: fall time
T_p: write pulse width
$P : P_w - P_r$

Figure 24 - Definition of the pulse width

The rise time T_r and the fall time T_f shall be less than 5 ns .

25.4 Definition of signals

The signals in Channel 1 are linearly related to the sum of the currents through the photo-diodes I_1, I_2, I_3 and I_4 are therefore linearly related to the optical power falling on the detectors.

26 Optical characteristics

26.1 Reflectance

The reflectance shall be within the range of

$$7\% < R < 50\%$$

where R is the reflectance,and media sensor holes should indicate whether it belongs to group A or B:

A : 7% to 23%
B : 15% to 50%.

The reflectance shall be specified on the control tracks in annex F. The measurement of reflectance shall be made from the protective layer side in an unrecorded blank area of the disk with focused-beam with optical axis parallel to the normal to the protective layer.

Copyright International Organization for Standardization
Provided by IHS under license with ISO
No reproduction or networking permitted without license from IHS Not for Resale

26.2 Uniformity of reflectance

Reflectance shall not vary more than ± 12% of the nominal baseline value in a given disk.

27 READ AND WRITE CHARACTERISTICS

27.1 Sensitivity of the recording layer

27.1.1 Optical conditions

The optical conditions for sensitivity of the recording layer shall be in accordance with clause 9.

27.1.2 Write power and writing conditions

The write power is the power required during a light pulse of the specified duration to make marks with characteristics as specified in 27.1.3 at a specific rotational frequency and a given radial position.

The write power and writing conditions shall be specified on the SFP Control zone.

The required power shall not exceed 20 mW.

27.1.3 Characteristics of the written marks

The characteristics of the written marks are determined by a measurement at a low frequency (V_L) condition, which is defined by any local mark repetition corresponding to 8 Channel bits length mark and space or lower, and by a measurement at a high frequency (V_H) condition, which is defined by any local mark repetition corresponding to 2 Channel bits length mark and space. Definition of the measurement parameters is given in figure 25 for the two types of media with different reflectivity polarity.

The following equations shall be satisfied:

$$V_L \geq V_S \times 0,8$$

where V_S is typical mark amplitude given in fraction of V_G as specified on the control tracks, and .

where V_S is typical mark amplitude given in fraction of V_G as specified on the control tracks and $V_H / V_L \geq 0,4$.

Copyright International Organization for Standardization
Provided by IHS under license with ISO
No reproduction or networking permitted without license from IHS Not for Resale

27.1.4 Definition and measurement conditions

The reflectivity characteristics of user-written data are shown in figure 25 for the two types of media with different reflectivity polarity.

The peak to peak values of the highest and the lowest frequency are denoted by V_H and V_L, respectively. The groove or land level of user-written data is denoted by V_G. Modulation degree is defined by V_L/V_G and resolution is defined by V_H / V_L.

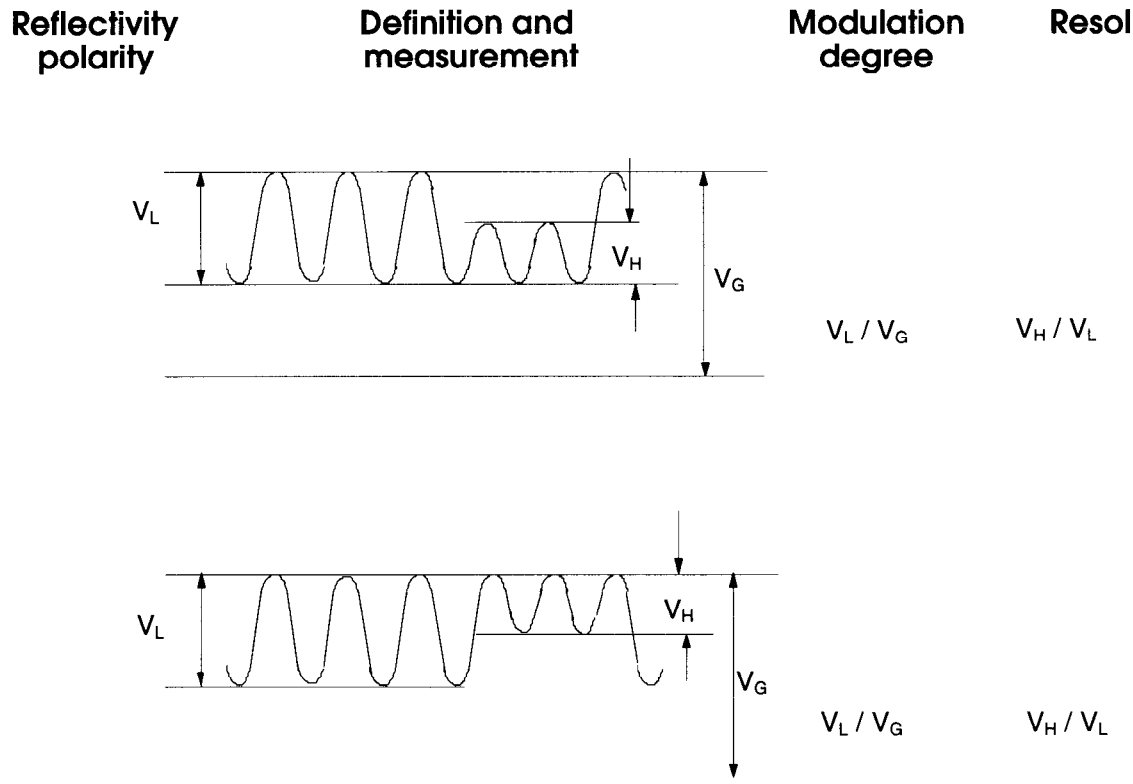

Figure 25 - Reflectivity characteristics of user-written data

27.2 Read characteristics

27.2.1 Optical conditions

The optical conditions for read characteristics shall be in accordance with clause 9.

Copyright International Organization for Standardization
Provided by IHS under license with ISO
No reproduction or networking permitted without license from IHS
Not for Resale

27.2.2 Read power

The maximum value for the read power on the user-written area of the disk shall be specified on the SFP control tracks.

The maximum read power for reading the SFP control tracks shall be specified on the PEP control tracks.

The maximum power required to read the PEP control tracks shall be 0,7 mW.

27.2.3 Reflectivity characteristics

The reflectivity characteristics shall be in accordance with 27.2.1 and 27.1.3. The reflectivity characteristics shall be specified in the control tracks.

27.2.4 Carrier-to-noise ratio

The carrier-to-noise ratio (C/N) shall be more than 45 dB.

Measuring conditions should be the following conditions:

- rotational frequency : 25 Hz
- carrier frequency : 15,5 MHz
- radial position : Outer test zone
- resolution bandwidth of spectrum analyzer : 30 kHz
- read-out point of carrier and noise level : shown in figure 26.

Copyright International Organization for Standardization
Provided by IHS under license with ISO
No reproduction or networking permitted without license from IHS Not for Resale

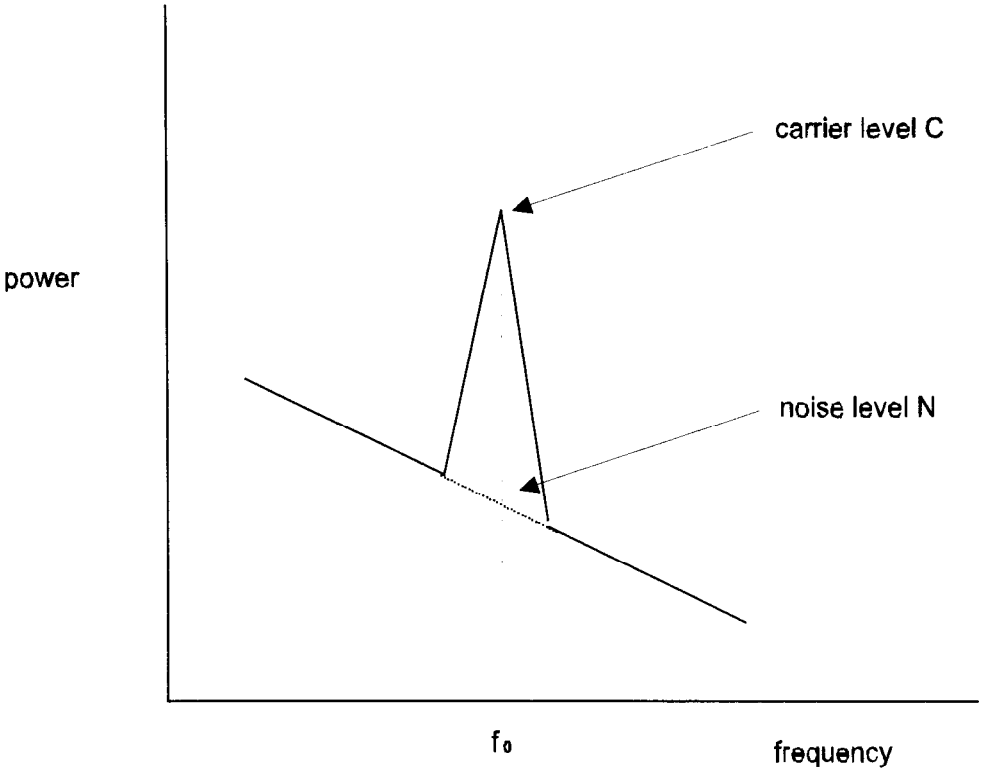

Figure 26 - Power versus frequency characteristic curve

27.2.5 Cross-talk

The test on cross-talk shall be carried out on any group of five adjacent unrecorded tracks in the Data zone.

Write a series of 8-Channel-bit-long marks spaced 8 Channel bits apart in the recording field of sectors in track *n*. The write conditions shall be as specified in 25.3.

Read the recording fields of sectors in tracks *(n-1), n* and *(n+1)* under the conditions 25.2.2 and 25.2.3.

The cross-talk from the track *n* to the track *(n-1)* and to the track *(n+1)* shall be lower than -26 dB.

27.2.6 Timing jitter

The test on timing jitter shall be carried out on any track with no defective sector in data zone.

Write a test pattern of M sequence generated by the generating polynomial

$$G(x) = x^{10} + x^3 + 1$$

Copyright International Organization for Standardization
Provided by IHS under license with ISO
No reproduction or networking permitted without license from IHS
Not for Resale

under the condition given in 27.1.2.

Read and detect the data signal with no equalization. Adjust the threshold fractional value so that the read back signal for the 3T mark is exactly 3-channel-bit-time long.

If the threshold fractional value has to be greater than 0,75 or less than 0,25, then the writing power and/or pulse is incorrectly specified in the SFP zone and the measurement is invalid.

Measure the time intervals between successive edges in the read back signal for 10^5 intervals in random sampling. The value of timing jitter due to the media, the standard deviation (one sigma) of the measured time interval, shall be less than 7,5% of the time period T of one channel bit.

Section 6: Characteristics of user data

28 Method of testing

Clauses 29 and 30 describe a series of measurements to test conformance of the user data on the disk to this International Standard. It checks the legibility of both embossed and user-written data. The data is assumed to be arbitrary. The user-written data may have been written by any drive in any environment. The read tests shall be performed on the Reference Drive.

Whereas clauses 20 to 27 disregard defects, clauses 29 and 30 include them as an unavoidable deterioration of the read signals. The gravity of a defect is determined by the correctability of the ensuing errors by the Error Detection and Correction circuit in the read channel defined below. The requirements in clauses 29 and 30 define a minimum quality of the data, necessary for data interchange.

28.1 Environment

All signals in clauses 29, 30 shall be within their specified ranges with the cartridge in any environment in the range of allowed operating environments defined in 8.1.2. It is recommended that before testing the entrance surface of the optical disk shall be cleaned according to the instructions of the manufacturer of the disk.

28.2 Reference Drive

All signals specified in clauses 29 to 30 shall be measured in the indicated channels of the Reference Drive. The drive shall have the following characteristics for the purpose of these tests.

Copyright International Organization for Standardization
Provided by IHS under license with ISO
No reproduction or networking permitted without license from IHS Not for Resale

28.2.1 Optics and mechanics

The focussed optical beam shall have the properties defined in clause 9.2. The disk shall rotate as specified in 9.5.

28.2.2 Read power

The optical power incident on the entrance surface of the disk and used for reading the information shall be in the range from 0,5 mW to Pmax.

28.2.3 Read amplifiers

The read amplifiers after the photo-detectors in Channel 2 shall be as specified in 9.3.

28.2.4 Analog-to-binary converters

The signal from the read amplifier shall be converted from analog-to-binary with an edge detector.

28.2.5 Data clock

The drive shall have a data clock which can lock to the RLL(1,7) encoded data on the disk. The data clock provides the Channel bit windows for timing the binary signals.

28.2.6 Binary-to-digital conversion

The rising and falling point of the binary signal represent the Channel bit data ONE. The binary signal shall be converted from binary-to-digital with a converter.

28.2.7 Error correction

Correction of errors in the data bytes shall be carried out by an Error Detection and Correction system based on the definition in annex E3.

28.2.8 Tracking

During the measurement of the signals, the focus of the optical beam shall follow the tracks as specified in 20.2.4.

Copyright International Organization for Standardization
Provided by IHS under license with ISO
No reproduction or networking permitted without license from IHS
Not for Resale

29 Minimum quality of a sector

This clause specifies the minimum quality of the data field of a sector as required for interchange of the data contained in that sector. The quality shall be measured on the Reference Drive specified in 28.2.

A byte error occurs when one or more bits in a byte have a wrong setting, as detected by the ECC circuit.

29.1 User-written data

The user-written data in a sector shall not contain any byte errors that cannot be corrected by the error correction defined in 28.2.7.

30 Data interchange requirements

A disk offered for interchange of data shall comply with the following requirements.

30.1 Tracking

The focus of the optical beam shall not jump tracks unintentionally.

30.2 User-written data

Any sector written in the Information zone that does not comply with 29.1 shall have been replaced according to the rules of the defect management as defined in clause 19.

30.3 Quality of disk

The quality of the disk is reflected in the number of replaced sectors in the Information zone. This Standard allows a maximum of 16384 replaced sectors. The maximum number acceptable to a user remains a matter of agreement between purchaser and supplier.

Copyright International Organization for Standardization
Provided by IHS under license with ISO
No reproduction or networking permitted without license from IHS Not for Resale

Annex A

(normative)

Distortion test

A.1 The distortion test checks if the case is free from unacceptable distortions and protrusions. The test is made by placing the cartridge horizontally on a gauge.

A.2 The test gauge consists of a base plate on which four posts P1,P2,P3 and P4 are fixed so as to correspond to four surfaces S1,S2,S3 and S4 respectively (see figure A.1). The dimensions are as follows (see figure A.2) :

Posts P1 and P2

$D_a = 18{,}0$ mm $\pm 0{,}1$ mm

$D_b = 9{,}95$ mm $^{+0{,}00\ \text{mm}}_{-0{,}10\ \text{mm}}$

$H_a = 5{,}0$ mm $\pm 0{,}1$ mm

$H_b = 7{,}0$ mm max.

Posts P3 and P4

$D_c = 14{,}0$ mm $\pm 0{,}1$ mm

After assembly, the upper annular surfaces of the four posts shall lie between two horizontal planes spaced 0,05 mm apart.

A.3 The location of the four reference surfaces S1, S2, S3 and S4 is defined in clause 10.3.4 and figure 4.

A.4 The distortion shall be inspected by measuring the vertical distance between the highest and lowest positions on the same surface.

A.5 The value of distortion shall not exceed 0,4 mm.

Copyright International Organization for Standardization
Provided by IHS under license with ISO
No reproduction or networking permitted without license from IHS
Not for Resale

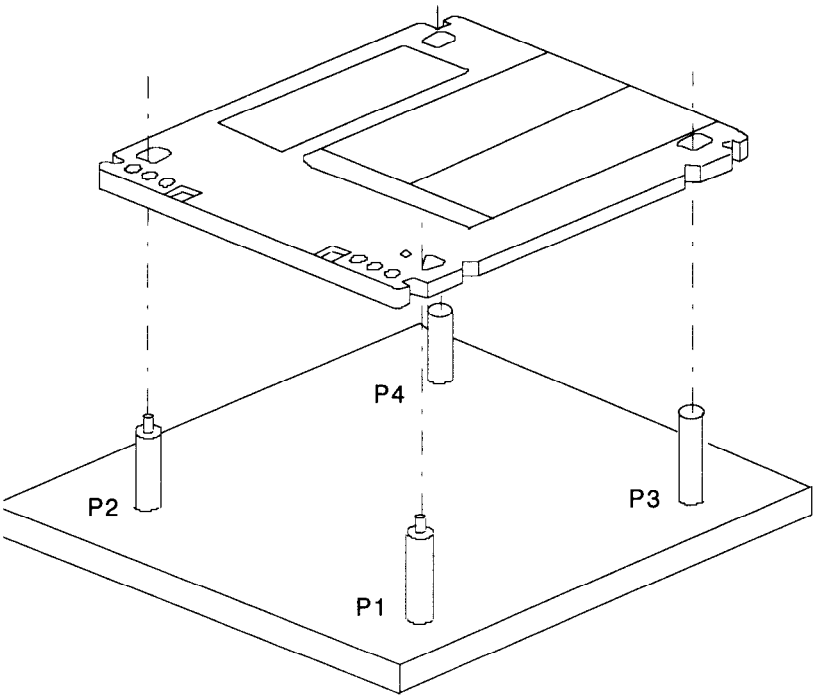

Figure A.1 - Distortion gauge

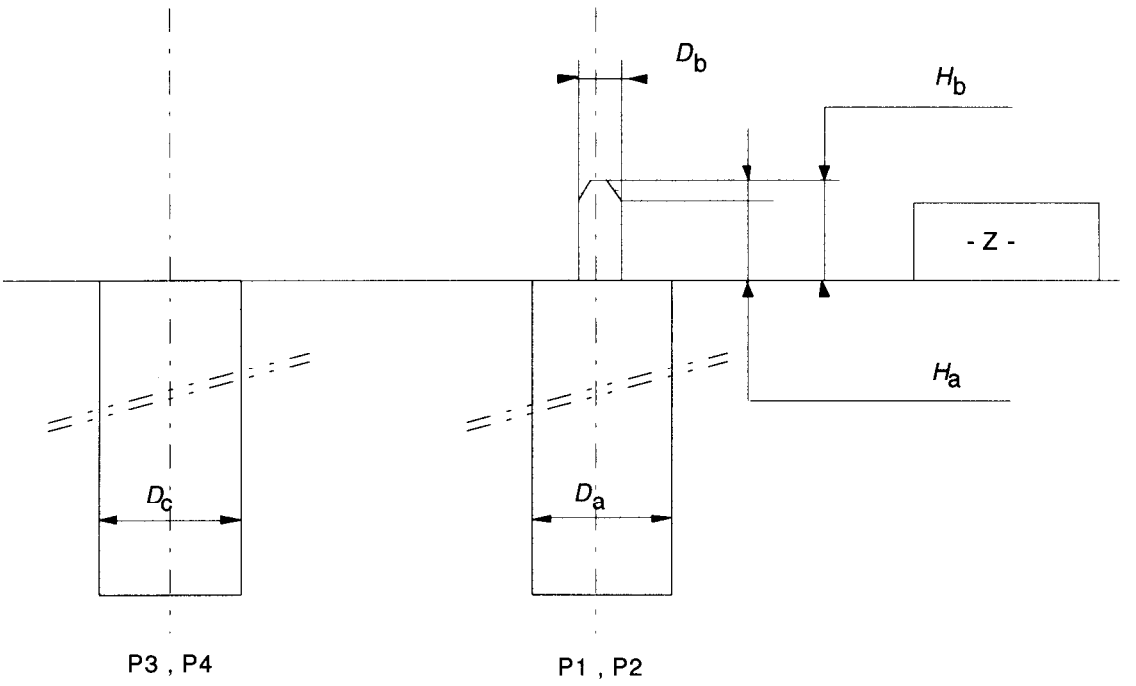

Figure A.2 - Details of posts

Copyright International Organization for Standardization
Provided by IHS under license with ISO
No reproduction or networking permitted without license from IHS
Not for Resale

Annex B

(normative)

Compliance test

B.1 The compliance test checks the flatness and flexibility of the case by forcing the four reference surfaces of the case into a plane. The test is made by placing the cartridge on the supports of a gauge and applying forces on the cartridge opposite to the supports.

B.2 The test gauge consists of a base plate on which four posts P1, P2, P3 and P4 are fixed so as to correspond to the four surfaces S1, S2, S3 and S4, respectively (see figure B.1). The dimensions are as follows (see figure B.2):

Post P1 and P2

$D_a = 18{,}0\ \text{mm} \pm 0{,}10\ \text{mm}$

$D_b = 9{,}95\ \text{mm}\ ^{+\ 0{,}00\ \text{mm}}_{-\ 0{,}10\ \text{mm}}$

$H_a = 5{,}0\ \text{mm} \pm 0{,}10\ \text{mm}$

$H_b = 7{,}0\ \text{mm max.}$

Post P3 and P4

$D_c = 14{,}0\ \text{mm} \pm 0{,}1\ \text{mm}$

After assembly, the upper annular surfaces of the four posts shall lie between two horizontal planes spaced 0,05 mm apart.

B.3 The location of the four reference surfaces S1, S2, S3 and S4 is defined in clause 10.4 and figure 4.

B.4 The cartridge shall be placed with its reference surfaces onto the posts of the horizontal gauge. Four vertical downward forces of 2,5 N each, shall be exerted on the cartridge opposite each of the four posts.

B.5 Requirements

Under theconditions of B.4, three of the four surfaces S1 to S4 shall be in contact with the annular surface of their respective posts, and any gap between the remaining surface S and the annular surface of its post shall not exceed 0,1 mm.

Copyright International Organization for Standardization
Provided by IHS under license with ISO
No reproduction or networking permitted without license from IHS Not for Resale

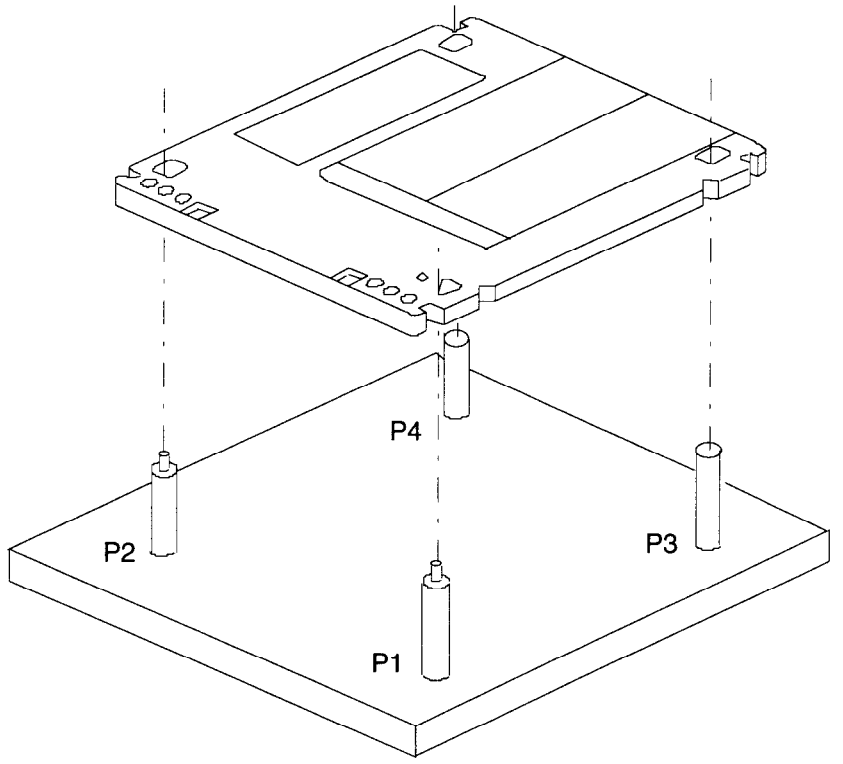

Figure B.1 - Compliance gauge

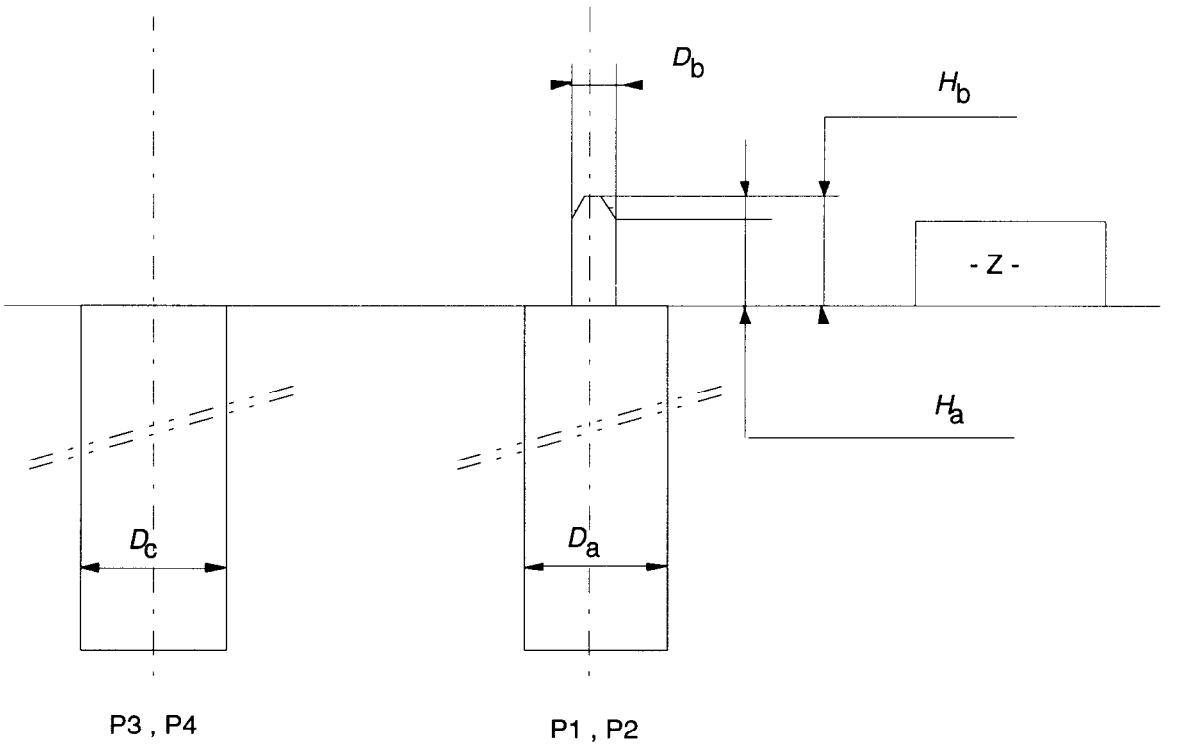

Figure B.2 - Details of posts

Copyright International Organization for Standardization
Provided by IHS under license with ISO
No reproduction or networking permitted without license from IHS
Not for Resale

Annex C

(normative)

Track deviation measurement

The deviation of a track from its nominal location is measured in the same way as a drive sees a track, i.e. through a tracking servo. The strength of the reference servo used for the test is in general less than the strength of the same servo in a normal 72drive. The difference in strength is intended for margins in the drive. The deviation of the track is related to the tracking error between the track and the focus of the optical beam, remaining after the reference servo. The tracking error directly influences the performance of the drive, and is the best criterion for testing track deviations.

The specification of the axial and radial track deviation can be described in the same terms. Therefore, this annex applies to both axial and radial track deviations.

C.1 Relation between requirements

The acceleration required by the motor of the tracking servo to make the focus of the optical beam follow the tracks on the disk is a measure for the allowed deviation of the tracks. An additional measure is the allowed tracking error between the focus and the track. The relation between both is given in figure C.1, where the maximum allowed amplitude of a sinusoidal track deviation is given as function of the frequency of the deviation. It is assumed in the figure that there is only one sinusoidal deviation present at a time.

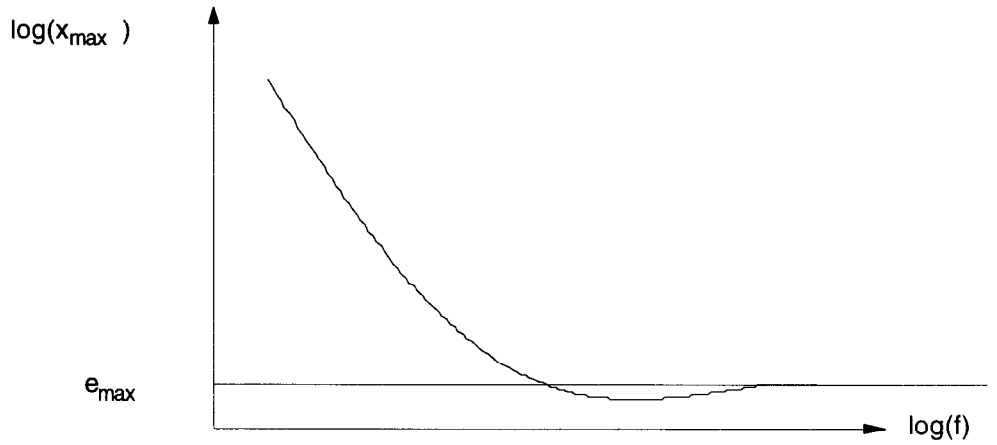

Figure C.1 - Maximum allowed amplitude of a single, sinusoidal track deviation

At low frequencies, the maximum allowed amplitude x_{max} is given by

$$x_{max} = a_{max} / (2\pi \ f)^2, \qquad (1)$$

where a_{max} is the maximum acceleration of the servo motor. At high frequencies

Copyright International Organization for Standardization
Provided by IHS under license with ISO
No reproduction or networking permitted without license from IHS
Not for Resale

$$x_{max} = e_{max}, \qquad (2)$$

where e_{max} is the maximum allowed tracking error. The connection between both frequency regions is given in C.3.

C.2 Reference servo

The above restriction of the track deviations is equal to the restriction of the track deviations for a reference servo. A reference servo has a well-defined transfer function, and reduces a single, sinusoidal track devation with amplitude x_{max} to a tracking error emax as in figure C.1.

The open-loop transfer function of the reference servo shall be

$$H_{\Sigma} = \frac{1}{c}\left(\frac{\omega_{o}}{i\omega}\right)^{2} \frac{1 + ic\omega / \omega_{o}}{1 + i\omega / c\omega_{o}} \qquad (3)$$

where $i = \sqrt{-1}$, $\omega = 2\pi f$, $\omega_{o} = 2\pi f_{o}$, and $c = 3$, with f_0 the 0-dB frequency of the open-loop transfer function. The constant c gives the cross-over frequencies of the lead-lag network of the servo: $f_1 = f_0 / c$ and $f_2 = f_0 \times c$. The reduction of a track deviation x to a tracking error e by the reference servo is given by

$$\frac{e}{x} = \frac{1}{1 + H_{\sigma}} \qquad (4)$$

If the 0 dB frequency is specified as

$$\omega_{O} = \sqrt{\frac{a_{max} c}{emax}} \qquad (5)$$

then a low-frequency track deviation with an acceleration a_{max} will be reduced to a tracking error e_{max} and a high-frequency track deviation will not be reduced. The curve in figure C.1 is given by

$$x_{max} = e_{max} \left|1 + H_{\sigma}\right|. \qquad (6)$$

The maximum acceleration required from the motor of this reference servo is

$$a_{max}(motor) = a_{max}(track) = \omega^{2} e_{max} \left|1 + H_{\sigma}\right| \qquad (7)$$

At low frequencies ($f < f_0 / c$) applies

$$a_{max}(motor) = a_{max}(track) = \frac{\omega_{o}^{2} e_{max}}{c} \qquad (8)$$

Copyright International Organization for Standardization
Provided by IHS under license with ISO
No reproduction or networking permitted without license from IHS
Not for Resale

Hence, it is permitted to use a_{max} (motor) as specified for low frequencies in 11.4.6 and 11.4.8 for the calculation of ω_0 of a reference servo.

C.3 Requirement for track deviations

The track deviations shall be such that, when tracking with a reference servo on a disk rotating at the specified frequency, the tracking error shall nowhere be larger than e_{max} during more than 12 µs.

The open-loop transfer function of the reference servo for axial and radial tracking shall be given by eq.(3) within an accuracy such that $|1 + H|$ does not differ by more than ± 20 % from its nominal value in a bandwidth from 25 Hz to 100 kHz. The constant c shall be 3. The 0 dB frequency $\omega_o / 2\pi$ shall be given by eq.(5), where a_{max} and e_{max} for axial and radial tracking are specified in 20.2.4.

The requirement for the transfer function of the phase-locked loop in the read channel (see 26.2.5) is the same as for the reference servo in the preceding paragraph.

C.4 Measurement implementation

Three possible implementations for an axial or radial measurement system have been given below. Ha is the open-loop transfer function of the actual tracking servo of the drive, Hs is the transfer function for the reference servo as given in eq.(3). x and y are the position of the track and the focus of the optical beam. e_s is the tracking error after a reference servo, which signal has to be checked according to the previous paragraph.

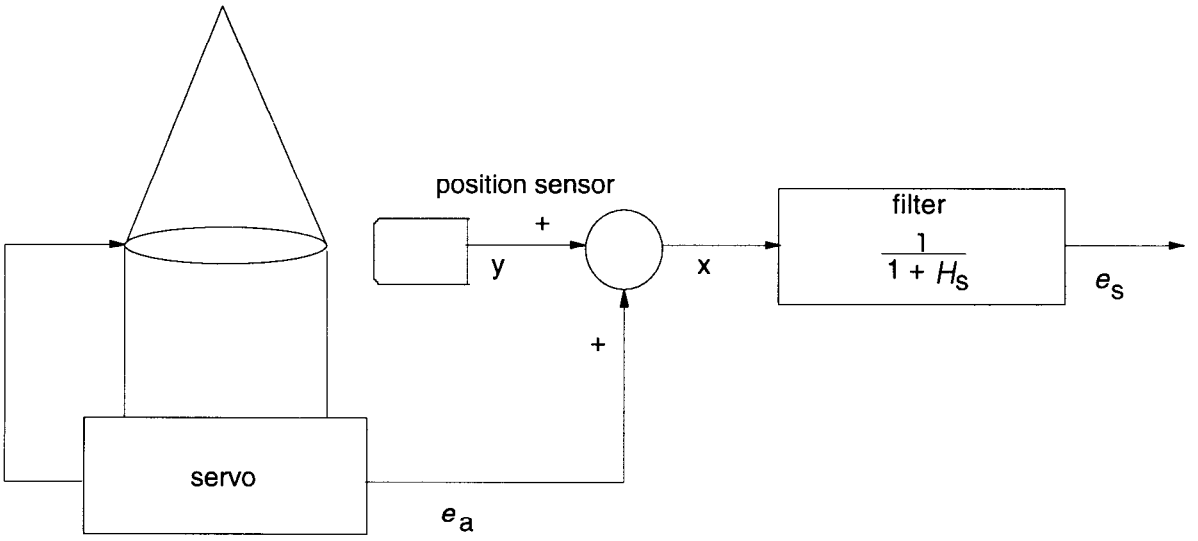

Figure C.2 - Implementation of a reference servo by filtering the track position signal with the reduction characteristics of the reference servo

Copyright International Organization for Standardization
Provided by IHS under license with ISO
No reproduction or networking permitted without license from IHS
Not for Resale

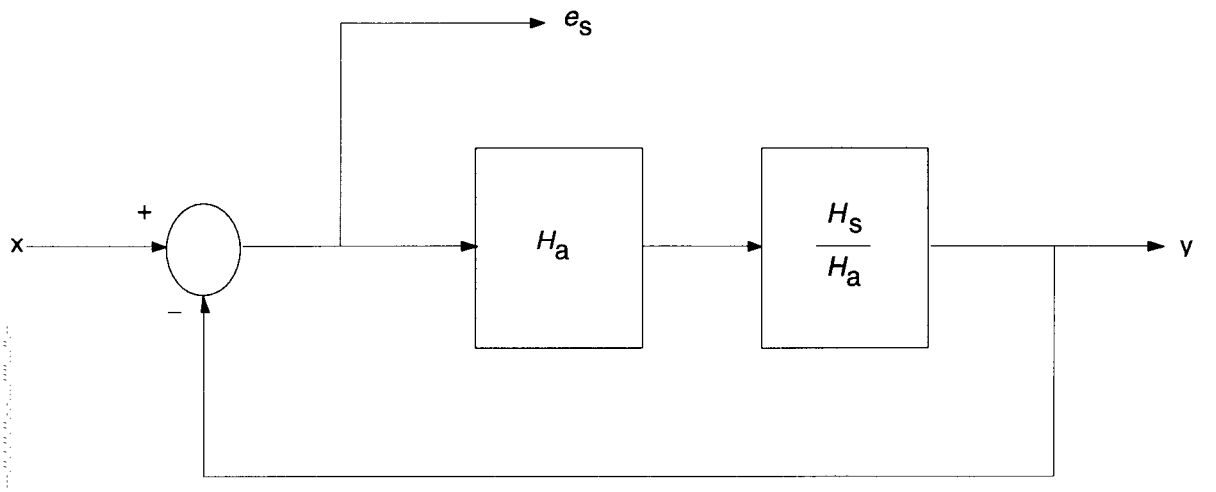

Figure C.3 - Implementation of a reference servo by changing the transfer function of the actual servo

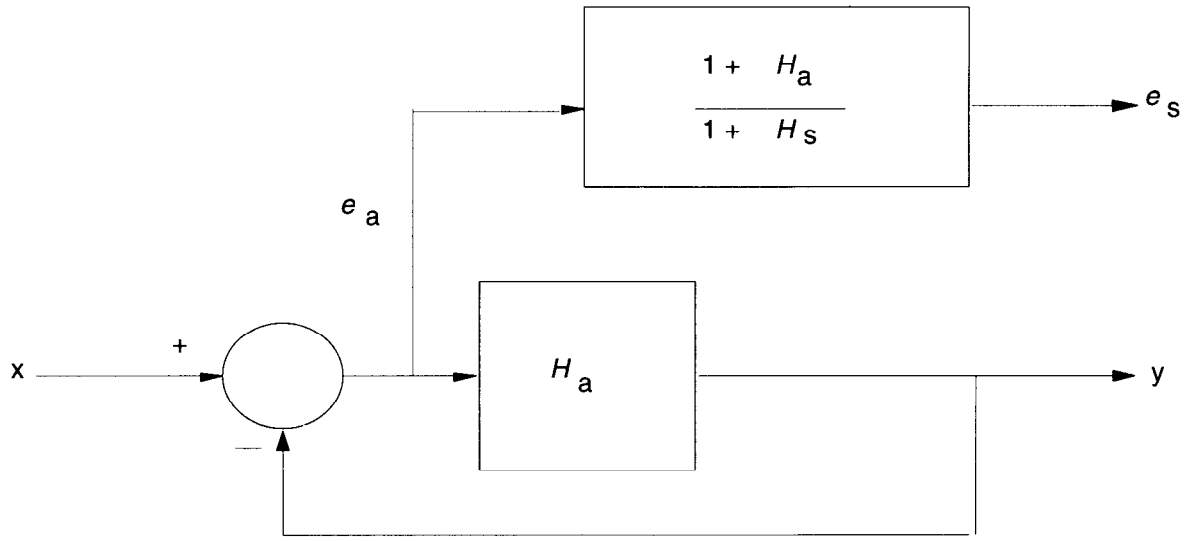

Figure C.4 - Implementation of a reference servo by changing the tracking error of the actual servo

The optimum implementation depends on the characteristics of Ha and Hs. Good results for motors in leaf springs are often obtained by using separate circuits in a low and high frequency channel. The implementation of figure C.2 is used in the low-frequency channel, while that of figs. C.3 and C.4 is used in the high-frequency channel. The signals from both channels are added with a reversed cross-over filter to get the required tracking error. In the low-frequency channel one can also use the current through the motor as a measure of the

Copyright International Organization for Standardization
Provided by IHS under license with ISO
No reproduction or networking permitted without license from IHS Not for Resale

acceleration of the motor, provided the latter is free from hysteresis. The current must be corrected for the transfer function of the motor and then be converted to a tracking error with a filter with a transfer function (e/a), equivalent to eq. (4).

--`,,```,,,,````-`-`,,`,,`,`,,`---

Copyright International Organization for Standardization
Provided by IHS under license with ISO
No reproduction or networking permitted without license from IHS

Not for Resale

Annex D

(normative)

Replacement algorithm

D.1 Definition

a and i are two binary numbers :

$1 \leq i \leq 2^{24}$, to cover all possible logical sector addresses,

$0 \leq i \leq 2^{8}$, to allow a theoretical maximum number of search iterations of 256.

A binary number d is defined by :

$d = a.2^{8} + i$

D(x) is the polynominal associated to d in the meaning of cyclical codes.

G(x) is the polynominal of CRC - 16 : $G(x) = x^{16} + x^{15} + x^{2} + 1$

R(x) is the remainder of the division of D(x) by G(x)

r is the 16-bit binary number associated to R(x).

The 15 least significant bits of r shall be used to assign an address to a defective sector of address a in the relocation zone of capacity 2^{15} sectors.

The maximum number of defective sectors which can be relocated shall be limited to 2^{14} to decrease the number of iterations in the relocation process.

Note : A logical sector address is the address of a sector of one kilobyte as known by the host computer. It shall not be mixed up with the address defined in the Note in 17.2; the address in 17.2 is a physical address on the disk .

D.2 Algorithm to recover a sector from the relocation zone

All the sectors are always post-written with their logical sector addresses (the logical sector address is post-written with user-data, see clause 15.2.4), this feature being used to handle the collisions.

When a sector of address a is found defective in the data zone, the following algorithm is used :

1) i = 0,
2) compute the alternate address r($a.2^{8} + i$),
3) read the sector at r,

Copyright International Organization for Standardization
Provided by IHS under license with ISO
No reproduction or networking permitted without license from IHS Not for Resale

4) if the sector is not readable (a defective sector), i = i + 1, go to 2,
5) if the sector is empty, the sector under seek is lost, an error message is sent to the host, exit,
6) compare the embedded logical sector address of this sector with the logical sector address of the sector under seek,
7) if the comparison succeeds, the sector is delivered to the user, exit, else i = i +1, go to 2.

D.3 Algorithm to write a sector in the relocation zone

When a sector of adress a is found defective during the verification process, during or after writing, the following algorithm is used :

1) i = 0,
2) compute the address r(a.2^8 + i) where the sector has to be rewritten,
3) read the sector of this address,
4) if the sector is not usable (a defective sector), i = i + 1, go to 2,
5) if the location at r is empty, write the sector,exit, else i = i + 1, go to 2.

The following is only informative.

D.4 Average length of a search

A relocation table has a capacity h. If n entries are stored with a uniform distribution in the Hash table containing h locations, the load factor is defined as n/h. A table is usually considered full when the load factor is substantially smaller than 1, for instance 0,5.

Assumming a near random filling of the relocation table, which is a likely hypothesis and, because of collision handling, the average number of searches for relocating one sector is 2,0 when the load factor reaches 0,5. When the load factor is 0 the number of searches is of course 1 and during the filling of the table (0 < n/h < 0,5) the average number of searches is 1,4.

Copyright International Organization for Standardization
Provided by IHS under license with ISO
No reproduction or networking permitted without license from IHS Not for Resale

Annex E

(normative)

Interleave and ECC for the Data fields of a sector

E.1 Contents of Data field

The bytes in the Data field constitute an ordered sequence A_n. The elements of A_n are, depending on the value of *n:*

for	$1 \le n \le 6$	: $A_n = AD_n$	address data bytes
	$7 \le n \le 1030$	: $A_n = D_m$	user data bytes
	$1031 \le n \le 1190$	: $A_n = E_{st}$	ECC check bytes,

where

$m = n - 6$

$s = ((n - 1031) \bmod 10) + 1$

$$t = \text{int}\left(\frac{n - 1031}{10}\right) + 1 .$$

The notation int(x) denotes the largest integer not greater than x; (x mod y) denotes the remainder of the integer division x/y.

The order of the user data bytes D_n is the same as the order in which they are input into the controller of the drive, i.e. D_1 comes first.

E.2 Interleaving

Before the ECC bytes are calculated, the bytes in the Data field are ten-way interleaved. For that purpose, the first two sub-groups of A_n are mapped onto a two-dimensional matrix B_{ij} with 103 rows and 10 columns (see figure E.1). Thus

for $1 \le n \le 1030$: $B_{ij} = A_n$

where

$$i = 102 - \text{int}\left(\frac{n - 1}{10}\right)$$

Copyright International Organization for Standardization
Provided by IHS under license with ISO
No reproduction or networking permitted without license from IHS Not for Resale

$j = (n - 1) \bmod 10$.

E.3 ECC

The ECC shall be computed over the Galois field based on the primitive polynomial

$$G_p(x) = x^8 + x^5 + x^3 + x^2 + 1 .$$

The elements of the field are $\alpha^i = (ß^i)^{88}$, where ß is a primitive root of $G_p(x)$. The value of the n-th bit in a byte is the coefficient of the n-th power of ß, where $0 \le n \le 7$, when ß is expressed on a polynomial basis.

The primitive polynomial and the elements shall be as specified above. The generator polynomial for the check bytes of the ECC shall be

$$G_e(x) = \prod_{i=120}^{i=135} (x + \alpha^i)$$

The 160 check bytes of the ECC shall be computed over the address bytes and the user data bytes. The corresponding ten information polynomials shall be

$$I_{ej}(x) = \sum_{i=0}^{i=102} B_{ij}\ \alpha^i$$

where $0 \le j \le 9$.

The contents of the 16 check bytes E_{st} for each polynomial $I_{ej}(x)$ are defined by the ten residual polynomials

$$R_{ej}(x) = I_{ej}(x) x^{16} \bmod G_e(x).$$

The storage locations for the coefficients of the polynomials are specified by

$$R_{ej}(x) = \sum_{t=1}^{t=16} \overline{E}_{j+1,t}\ x^{16-t}$$

The bits of the computed check bytes shall be inverted before they are encoded into Channel bits, as indicated by the use of $\overline{E}$ in the above formula and E in figure E.1.

E.4 Recording sequence

The bytes of the Data field shall be recorded on the disk immediately after the Sync field. Their order shall be according to the sequence A_n with the Resync bytes inserted as specified in E.4.

Figure E.1 shows in matrix form the arrangement of the bytes. The sequence of recording is from left to right and top to bottom. The first 103 rows of the Data field contain the user data bytes and the address data bytes. The last 16 rows contain the ECC check bytes.

Copyright International Organization for Standardization
Provided by IHS under license with ISO
No reproduction or networking permitted without license from IHS
Not for Resale

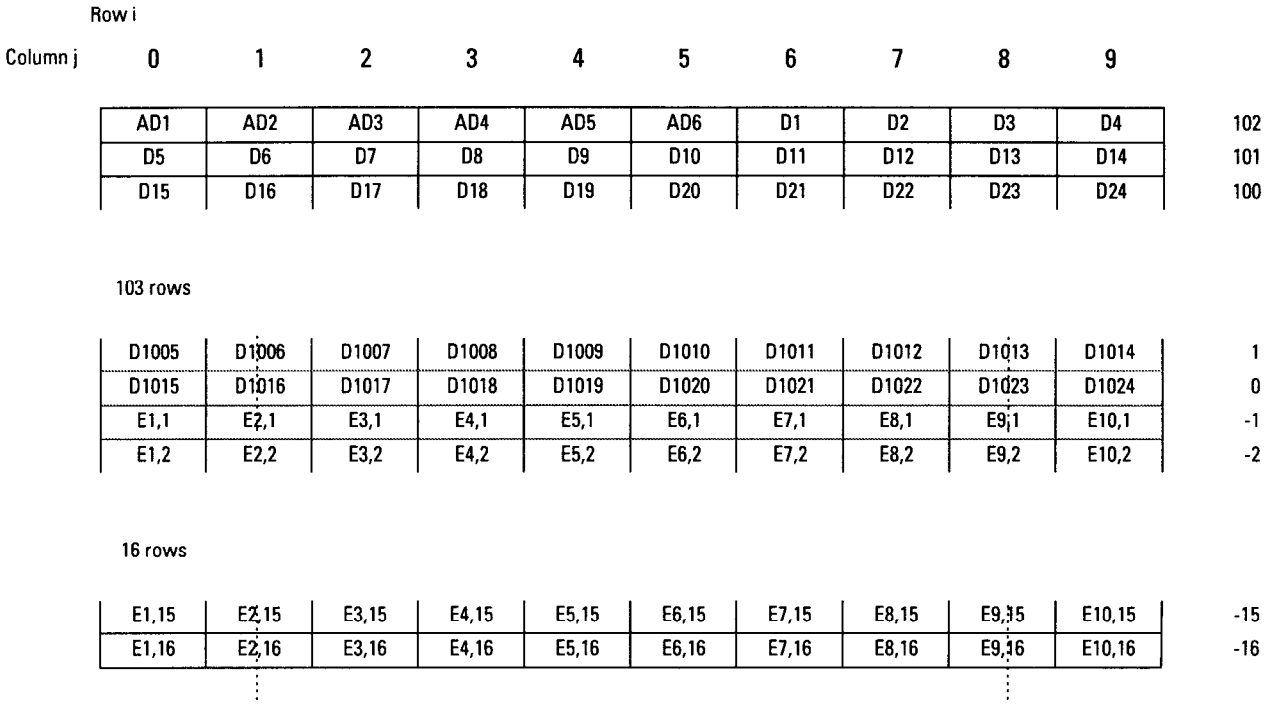

Figure E.1 - Data field configuration. The indices i and j of bytes are given along the sides of the matrix.

Copyright International Organization for Standardization
Provided by IHS under license with ISO
No reproduction or networking permitted without license from IHS
Not for Resale

Annex F

(normative)

PEP Control Zone

F.1 Recording in the PEP Control Zone

In the PEP Zone there shall be 1 086 to 1 167 PEP bit cells per revolution. A PEP bit is recorded by writing marks in either the first or the second half of the cell.

The angular length of a mark shall be 360°/ 656 244 to 360°/ 610 986.

A ZERO shall be represented by a change from marks to no marks at the centre of the cell and a ONE by a change from no marks to marks at this centre.

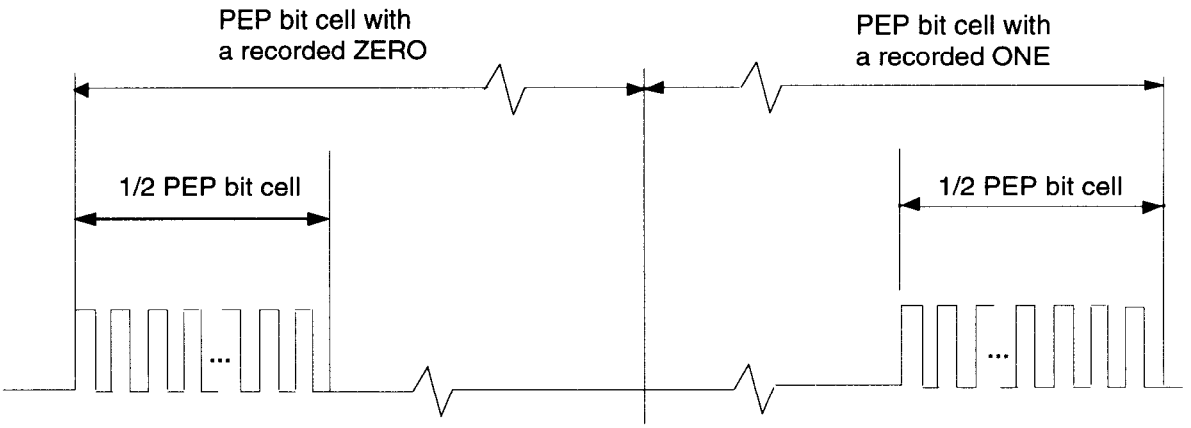

Figure F.1 - Example of phase-encoded modulation in the PEP Control Zone

F.2 Format of the tracks of the PEP Control Zone

Each track in the PEP Zone shall have three sectors as shown in fig.F2. The numbers below the fields indicate the number of PEP bit cells in each field.

One revolution period (3 sectors)

Sector	Gap	Sector	Gap	Sector	Gap
354		354		354	

Figure F.2 -Track format in the PEP Control Zone

Copyright International Organization for Standardization
Provided by IHS under license with ISO
No reproduction or networking permitted without license from IHS
Not for Resale

The gaps between sectors shall be unrecorded areas having a length corresponding to 8 to 35 PEP bits.

F.3 Format of a sector of the PEP Control Zone

Each sector of 354 PEP bits shall have the following layout. The former half shall be recorded in normal way and the latter half shall be recorded in reverse way so as to be read with reverse direction of rotation.

One sector (354 bits)

Preamble	Sync	Side	Sector Number	Data	CRC	CRC	Data	Sector Number	Side	Sync	Preamble
16	1	4	4	144	8	8	144	4	4	1	16

Normally recorded Reversely recorded

Figure F.3 -Sector format in the PEP Control Zone

F.3.1 Preamble field

This field shall consist of 16 ZERO bits.

F.3.2 Sync field

This field shall consist of 1 ONE bit.

F.3.3 Side field

This field shall consist of four bits specifying whether the medium surface being read out is side A or side B. The allowed settings of these four bits shall be:

0000 : side A

0001 : side B

F.3.4 Sector Number field

This field shall consist of four bits specifying in binary notation the sector number from 0 to 2.

F.3.5 Data field

This field shall comprise 18 8-bit bytes numbered 0 to 17. These bytes shall specify the following.

Copyright International Organization for Standardization
Provided by IHS under license with ISO
No reproduction or networking permitted without license from IHS Not for Resale

Byte 0: Media Configuration 1

Bit	7	6	5	4	3	2	1	0	
	x	x	x	x	x	0	0	1	(1,7) RLL Recording Code.
	x	x	x	x	1	x	x	x	Mark Edge Recording.
	x	0	1	0	x	x	x	x	Modified Constant Angular Velocity (MCAV) Rotational Recording Mode.
	0	x	x	x	x	x	x	x	Continuous Composite Servo tracking.
	1	x	x	x	x	x	x	x	Sampoled Servo tracking.

Byte 1: Media Configuration 2

Bit	7	6	5	4	3	2	1	0	
	x	x	x	x	x	0	1	0	Number of user bytes per sector (1024 bytes). Binary equivalent of "n" in the expression 256*2n used todescribe the number of user bytes per sector.
	x	x	x	x	0	x	x	x	Reserved.
	x	0	0	0	x	x	x	x	Reed-Solomon Long Distance Error Correction code of degree 16 with a 10-way interleave.
	0	x	x	x	x	x	x	x	Reserved.

Byte 2: Sectors per Track

This byte shall be set to 11111111, indicating that it is not used.

Byte 3: Reflectance

This byte shall specify the disk manufacturer's specification of the base line reflectance *R* of the disk, expressed as a fraction, when measured at a nominal wavelength of 780 nm. It is specified as a number n such that

$n = 100\ R.$

Byte 4: Signal Amplitude and Polarity for Pre-formatted data

Bit	7	6	5	4	3	2	1	0	
	x	n	n	n	n	n	n	n	An absolute, signed number representing the signal amplitude and polarity of the pre-formatted marks given as a number n, such that $n = 50\ (I_P\ /\ I_o\ )$ where Ip is the signal from the low frequency pre-formatted marks and Io is the signal from an unrecorded,ungrooved area. If Bit 6 is set to ZERO, this number is positive and it indicates low-to-high recording. If Bit 6 is set to ONE, this number is negative and expressed by Bit 5 to 0 in TWO's

Copyright International Organization for Standardization
Provided by IHS under license with ISO
No reproduction or networking permitted without license from IHS
Not for Resale

n x x x x x x x

complement and it indicates high-to low recording. For CCS this bit shall be set to 0 and means land recording. For SS this bit shall be set either to 0 or to 1 ; 0 indicates there are long parts of embossed groove, 1 indicates there is no groove.

Byte 5: Signal Amplitude and Polarity for User Recorded Data

Bit 7 6 5 4 3 2 1 0
n n n n n n n n

An absolute signed number representing the signal amplitude and polarity of the user recorded marks given as a number n, such that

$$n = 25\ (I_u / I_{ot})$$

where I_u is the signal of the low frequency user recorded marks and Iot is the on-track signal from an unrecorded track. If Bit 7 is set to ZERO, this number is positive and it indicates low-to-high recording. If Bit 7 is set to ONE, this number is negative and expressed by Bit 6 to 0 in TWO's complement and it indicates high-to-low recording.

Byte 6: Maximum read power

This byte shall specify the maximum permitted read power in mW in the Information zone, at a wavelength of 780 nm and a rotational frequency of the disk of 25 Hz. It is specified as a number n such that

$$n = 20\ P_w .$$

Byte 7: Media type

This byte shall be set to 00010000, indicating Write-Once optical disk cartridge.

Byte 8: Last track in the Data zone (MSB).
Byte 9: Last track in the Data zone.
Byte 10: Last track in the Data zone (LSB).

Byte 11: Generation Code

This byte shall be set to 00000000, indicating this Standard is the first generation standard of 300mm Write-Once Optical Disk Cartridge.

Copyright International Organization for Standardization
Provided by IHS under license with ISO
No reproduction or networking permitted without license from IHS Not for Resale

Bytes 12,13: Reserved

These bytes shall be set to (FF).

Bytes 14 to 17: Unspecified

These bytes may be used for manufacturer identification. They shall be ignored in interchange.

F.3.6 CRC

The eight bits of the CRC shall be computed over the Side Field, the Sector Number field and the Data field of the PEP sector.

The generator polynomial shall be

$$G(x) = x^8 + x^4 + x^3 + x^2 + 1 .$$

The residual polynomial is defined by:

$$R(x)=\left(\sum_{i=144}^{i=151} b_i x^i + \sum_{i=0}^{i=143} \overline{b_i} x^i\right) x^8 \bmod G(x),$$

where b_i denotes a bit of the first one bytes and $\overline{bi}$ an inverted bit. Bit b_{151} is the highest order bit of the Side field.

The contents of the 8 check bits c_k of the CRC are defined by

$$R_c(x) = \sum_{k=0}^{k=7} c_k x^k .$$

is recorded in the highest order bit of the CRC byte of the PEP sector.

Copyright International Organization for Standardization
Provided by IHS under license with ISO
No reproduction or networking permitted without license from IHS
Not for Resale

Annex G

(normative)

Control data of the SFP

Each SFP Control zone shall comprise an embossed part and a part post-written by the manufacturer at the end of the disk test.

- Each logical sector in the two SFP control parts shall contain the same control data provided by the manufacturer of the media.

In the embossed part the control data shall be divided into four groups in the following way :

- a duplicate of the PEP information (G.1),
- media information (G.2),
- system information (G.3),
- unspecified data (G.4).

In the embossed part, optional bytes shall either contain the prescribed data or be set to (FF).

In the post-written part, the control data shall contain media information (G.5) specific to the very disk which carries this information (not nominal information). The post-written part allows the drive to use the disk at best.

In the post-written part, all the bytes are optional. This part can remain entirely unwritten. If partly used it shall conform to G.5.

The embossed parts of the SFPs shall extend from track -375 to track -346 and from track 56 625 to track 56 654.

The post-written parts of the SFPs shall extend from track -345 to track-339 and from track 56 617 to track 56 624.

G.1 Duplicate of the PEP information

Bytes 0 to 17 shall be identical with the 18 bytes of the Data field of a sector of the PEP zone (see Annex F).

G.2 Media information

Byte 18 : Wavelength

This byte shall specify the wavelength L_1, in nanometres, of the drive as a number n such that

$$n = 1/5\ L_1.$$

This byte shall be set to $n = 156$.

Copyright International Organization for Standardization
Provided by IHS under license with ISO
No reproduction or networking permitted without license from IHS
Not for Resale

Byte 19 : Reflectance

This byte shall specify the reflectance R_1 of the disk measured at wavelength L_1 as a number n such that

$$n = 100\ R_1.$$

Byte 20 : Linear Velocity

This byte shall specify the linear velocity V_1 in metres/sec of the disk as a number n such that

$$n = 5\ V_1.$$

This byte shall be set to $n = 39$.

Byte 21 : Maximum read power

This byte shall specify the maximum read power P_1 in mW in the information zone under condition L_1 and V_1 expressed as a number n such that

$$n = 20\ P_1.$$

Bytes 22 to 29 : Write power and write pulse width compensation at DC write

Bytes 22 to 29 shall specify the write powers P_w in mW and the write pulse width compensations T_c in percent to the Channel bit length T for four values of a write pulse width T_w, under condtion L_1 and V_1. P_w is expressed as a number n such that

$$n = 5\ P_c.$$

Tc is expressed as a number n such that

$$n = T_c.$$

Byte 22 : Write power P_w at $T_w = 2T$
Byte 23 : Write pulse width compensation T_c at $T_w = 2T$

Byte 24 : Write power P_w at $T_w = 3T$
Byte 25 : Write pulse width compensation T_c at $T_w = 3T$

Byte 26 : Write power P_w at $T_w = 4T$
Byte 27 : Write pulse width compensation T_c at $T_w = 4T$

Byte 28 : Write power P_w at $T_w = 8T$
Byte 29 : Write pulse width compensation T_c at $T_w = 8T$

Copyright International Organization for Standardization
Provided by IHS under license with ISO
No reproduction or networking permitted without license from IHS Not for Resale

Byte 30 : Write power at pulse train write

Byte 30 shall specify the write power in mW under condition L_1 and V_1. P_w is expressed as a number n such that

$$n = 5P_w.$$

Bytes 31 to 32 : Write pulse width and write pulse pitch at pulse train write

Bytes 31 and 32 shall specify the write pulse width T_t in percent to the Channel bit length T and the write pulse pitch T_p in percent to the Channel bit lenght T under condition L_1 and V_1.

T_t is expressed as a number n such that

$$n = T_t.$$

T_p is expressed as a number n such that

$$n = T_p.$$

Byte 31 : Write pulse width
Byte 32 : Write pulse pitch

Byte 33 : Reserved

This byte shall be set to (FF).

Byte 34 : Linear velocity

This byte shall specify the linear velocity V_2 in metres/sec of the disk, expressed in the same way as V_1 in Byte 20.

This byte shall be set to $n = 51$.

Bytes 35 to 47

These bytes shall specify the same parameters as in Bytes 21 to 33, but under the condition $L_1$and V_2.

Byte 48 : Linear velocity

This byte shall specify the linear velocity V_3 in metres/sec of the disk, expressed in the same way as V_1 in Byte 20.

This byte shall be set to $n = 66$.

Copyright International Organization for Standardization
Provided by IHS under license with ISO
No reproduction or networking permitted without license from IHS Not for Resale

Bytes 49 to 61

These bytes shall specify the same parameters as in Bytes 21 to 33, but under the condition L_1 and V_3.

Byte 62 : Linear velocity

This byte shall specify the linear velocity V_4 in metres/sec of the disk, expressed in the same way as V_1 in Byte 20.

This byte shall be set to $n = 86$.

Bytes 63 to 75

These bytes shall specify the same parameters as in Bytes 21 to 33, but under the condition L_1 and V_4.

Byte 76 : Linear velocity

This byte shall specify the linear velocity V_5 in metres/sec of the disk, expressed in the same way as V_1 in Byte 20.

This byte shall be set to $n = 112$.

Bytes 77 to 89

These bytes shall specify the same parameters as in Bytes 21 to 33, but under the condition L_1 and V_5.

Byte 90 : Linear velocity

This byte shall specify the linear velocity V_6 in metres/sec of the disk, expressed in the same way as V_1 in Byte 20.

This byte shall be set to $n = 145$.

Bytes 91 to 103

These bytes shall specify the same parameters as in Bytes 21 to 33, but under the condition L_1 and V_6.

Byte 104 : Linear velocity

This byte shall specify the linear velocity V_7 in metres/sec of the disk, expressed in the same way as V_1 in Byte 20.

Bytes 105 to 117

These bytes shall specify the same parameters as in Bytes 21 to 33, but under the dondition L_1 and V_7.

Copyright International Organization for Standardization
Provided by IHS under license with ISO
No reproduction or networking permitted without license from IHS Not for Resale

Byte 118 : Linear velocity

This byte shall specify the linear velocity V_8 in metres/sec of the disk, expressed in the same way as V_1 in Byte 20.

Bytes 119 to 131

These bytes shall specify the same parameters as in Bytes 21 to 33, but under the condition L_1 and V_8.

Byte 132 : Wavelength

This byte shall specify the wavelength L_2, in nanometres, of the drive as number n such that

$$n = 1/5 \quad L_2.$$

This byte shall be set to n = 134.

Bytes 133 to 245

These bytes shall specify the same parameters as in bytes 19 to 131, but under the condition L_3.

Byte 246 : Wavelength

This byte shall specify the wavelength L_3 in nanometres, of the drive expressed in the same way as L_1 in Byte 18.

Bytes 247 to 359

These bytes shall specify the same parameters as in bytes 19 to 131, but under the condition L_3.

Bytes 360 to 379 : Reserved

These bytes shall be set to (FF).

G.3 System information

Bytes 380 to 471 : Reserved

These bytes shall be set to (FF)

Byte 472 : Write strategy

The allowed settings of this byte shall be :

0000 0001 : only DC write is allowed
0000 0010 : only pulse train write is allowed
0000 0011 : both DC write and pulse train write are allowed.

Copyright International Organization for Standardization
Provided by IHS under license with ISO
No reproduction or networking permitted without license from IHS Not for Resale

Bytes 473 to 479 : Reserved

These bytes shall be set to (FF).

G.4 Unspecified data

Bytes 480 to 1023

The contents of these bytes are not specified in this Standard. They may contain an identification of the manufacturer. They shall be ignored in interchange.

G.5 Post-written Media Information

This set of bytes can be partially used (i.e. only the bytes related to one wavelength; in this case all the unused bytes shall be set to (FF)).

Bytes 0 to 17 shall be set to (FF).

Byte 18 : Wavelength

This byte shall specify the wavelength L_1, in nanometres, of the drive as a number n such that

$$n = 1/5\ L_1.$$

This byte shall be set to $n = 156$.

Byte 19 : Reflectance

This byte shall specify the reflectance R_1 of the disk measured at wavelength L_1 as a number n such that

$$n = 100\ R_1.$$

Byte 20 : Linear Velocity

This byte shall specify the linear velocity V_1 in metres/sec of the disk as a number n such that

$$n = 5\ V_1.$$

This byte shall be set to $n = 39$.

Byte 21 : Maximum read power

This byte shall specify the maximum read power P_1 in mW in the information zone under condition L_1 and V_1 expressed as a number n such that

$$n = 20\ P_1.$$

Copyright International Organization for Standardization
Provided by IHS under license with ISO
No reproduction or networking permitted without license from IHS
Not for Resale

Bytes 22 to 29 : Write power and write pulse width compensation at DC write

Bytes 22 to 30 shall specify the write powers P_w in mW and the write pulse width compensations T_c in percent to the Channel bit length T for four values of a write pulse width T_w, under condtion L_1 and V_1. P_w is expressed as a number n such that

$$n = 5 P_w.$$

T_c is expressed as a number n such that

$$n = T_c.$$

Byte 22 : Write power P_w at $T_w = 2T$
Byte 23 : Write pulse width compensation T_c at $T_w = 2T$

Byte 24 : Write power P_w at $T_w = 3T$
Byte 25 : Write pulse width compensation T_c at $T_w = 3T$

Byte 26 : Write power P_w at $T_w = 4T$
Byte 27 : Write pulse width compensation T_c at $T_w = 4T$

Byte 28 : Write power P_w at $T_w = 8T$
Byte 29 : Write pulse width compensation T_c at $T_w = 8T$

Byte 30 : Write power at pulse train write

Byte 30 shall specify the write power in mW under condition L_1 and V_1. P_w is expressed as a number n such that

$$n = 5 P_w.$$

Bytes 31 to 32 : Write pulse width and write pulse pitch at pulse train write

Bytes 31 and 32 shall specify the width pulse T_t in percent to the Channel bit length T and the write pulse pitch T_p in percent to the Channel bit lenght T under condition L_1 and V_1.

T_t is expressed as a number n such that

$$n = T_t.$$

T_p is expressed as a number n such that

$$n = T_p.$$

Byte 31 : Write pulse width
Byte 32 : Write pulse pitch

Copyright International Organization for Standardization
Provided by IHS under license with ISO
No reproduction or networking permitted without license from IHS Not for Resale

Byte 33 : Reserved

This byte shall be set to (FF).

Byte 34 : Linear velocity

This byte shall specify the linear velocity V_2 in metres/sec of the disk, expressed in the same way as V_1 in Byte 20.

This byte shall be set to $n = 51$.

Bytes 35 to 47

These bytes shall specify the same parameters as in Bytes 21 to 33, but under the condition L_1 and V_2.

Byte 48 : Linear velocity

This byte shall specify the linear velocity V_3 in metres/sec of the disk, expressed in the same way as V_1 in Byte 20.

This byte shall be set to $n = 66$.

Bytes 49 to 61

These bytes shall specify the same parameters as in Bytes 21 to 33, but under the condition L_1 and V_3.

Byte 62 : Linear velocity

This byte shall specify the linear velocity V_4 in metres/sec of the disk, expressed in the same way as V_1 in Byte 20.

This byte shall be set to $n = 86$.

Bytes 63 to 75

These bytes shall specify the same parameters as in Bytes 21 to 33, but under the condition L_1 and V_4.

Byte 76 : Linear velocity

This byte shall specify the linear velocity V_5 in metres/sec of the disk, expressed in the same way as V_1n Byte 20.

This byte shall be set to $n = 112$.

Bytes 77 to 89

These bytes shall specify the same parameters as in Bytes 21 to 33, but under the condition L_1 and V_5.

Copyright International Organization for Standardization
Provided by IHS under license with ISO
No reproduction or networking permitted without license from IHS Not for Resale

Byte 90 : Linear velocity

This byte shall specify the linear velocity V_6 in metres/sec of the disk, expressed in the same way as V_1 in Byte 20.

This byte shall be set to $n = 145$.

Bytes 91 to 103

These bytes shall specify the same parameters as in Bytes 21 to 33, but under the condition L_1 and V_6.

Byte 104 : Linear velocity

This byte shall specify the linear velocity V_7 in metres/sec of the disk, expressed in the same way as V_1 in Byte 20.

Bytes 105 to 117

These bytes shall specify the same parameters as in Bytes 21 to 33, but under the dondition L_1 and V_7.

Byte 118 : Linear velocity

This byte shall specify the linear velocity V_8 in metres/sec of the disk, expressed in the same way as V_1 in Byte 20.

Bytes 119 to 131

These bytes shall specify the same parameters as in Bytes 21 to 33, but under the condition L_1 and V_8.

Byte 132 : Wavelength

This byte shall specify the wavelength L_2, in nanometres, of the drive as number n such that

$$n = 1/5 \quad L_2.$$

This byte shall be set to $n = 134$.

Bytes 133 to 245

These bytes shall specify the same parameters as in bytes 19 to 131, but under the condition L_2.

Byte 246 : Wavelength

This byte shall specify the wavelength L_3, in nanometres, of the drive expressed in the same way as L_1 in Byte 18.

Copyright International Organization for Standardization
Provided by IHS under license with ISO
No reproduction or networking permitted without license from IHS Not for Resale

Bytes 247 to 359

These bytes shall specify the same parameters as in bytes 19 to 131, but under the condition L_3.

Bytes 360 to 379 : Reserved

These bytes shall be set to (FF).

Bytes 380 to 1023

The contents of these bytes are not specified in this International Standard. They shall be ignored in interchange.

Copyright International Organization for Standardization
Provided by IHS under license with ISO
No reproduction or networking permitted without license from IHS
Not for Resale

Annex H

(informative)

Guidelines for sector replacement

Clause 19 assumes that a sector is defective and will be replaced by the defect management when the following condition exists:

a column in the Data field (see figure E.1) contains more than four defective bytes A_n.

It is to be noted that, in the verified write process, this occurence should be met in more severe conditions than the natural read conditions : the data window should be artificially decreased by a phase perturbation of the read out clock.

Copyright International Organization for Standardization
Provided by IHS under license with ISO
No reproduction or networking permitted without license from IHS
Not for Resale

Annex J

(normative)

Test method for the holding characteristic of the disk

J.1 The purpose of this test is to determine the magnetic characteristics of the magnetizable material of the hub.

J.2 The test device (see figure J.1) consists of a spacer, a magnet, a back yoke and a centre shaft. The dimensions of test device are as follows :

$D_d = 47{,}0$ mm ± 0,1 mm

$D_e = 60{,}0$ mm ± 0,1 mm

$D_f = 73{,}0$ mm max

$D_g = 34{,}0$ mm + 0,0 / - 0,1 mm

$H_c = 0{,}4$ mm ± 0,01 mm

$H_d = 1{,}0$ mm ± 0,05 mm.

J.3 The material of the test device shall be :

Magnet : Sm-Co

Back yoke : Any suitable magnetizable material

Spacer : Non-magnetizable material or air gap

Centre shaft: : Non-magnetizable material.

J.4 The characteristics of the magnet with back yoke are as follows :

Number of poles : 4

Maximum energy product (BH max) : 175 KJ/m^3 ± 16 KJ/m^3 .

The characteristics of the magnet with back yoke shall be adjusted by the use of a pure nickel plate with the following dimensions (see figure J.2), and the adsorbent force of this plate at the point of

$H_c = 0{,}4$ mm ± 0,1 mm

when spaced from the magnet surface shall be 5,0 N + 2,0 N/ -0,0 N.

$D_h = 37{,}0$ mm ± 0,1 mm

Copyright International Organization for Standardization
Provided by IHS under license with ISO
No reproduction or networking permitted without license from IHS Not for Resale

$D_i = 54{,}0$ mm ± 0,1 mm

$H_e = 1{,}0$ mm ± 0,05 mm.

J.5 The test condition for temperature shall be as specified in 8.1.1.

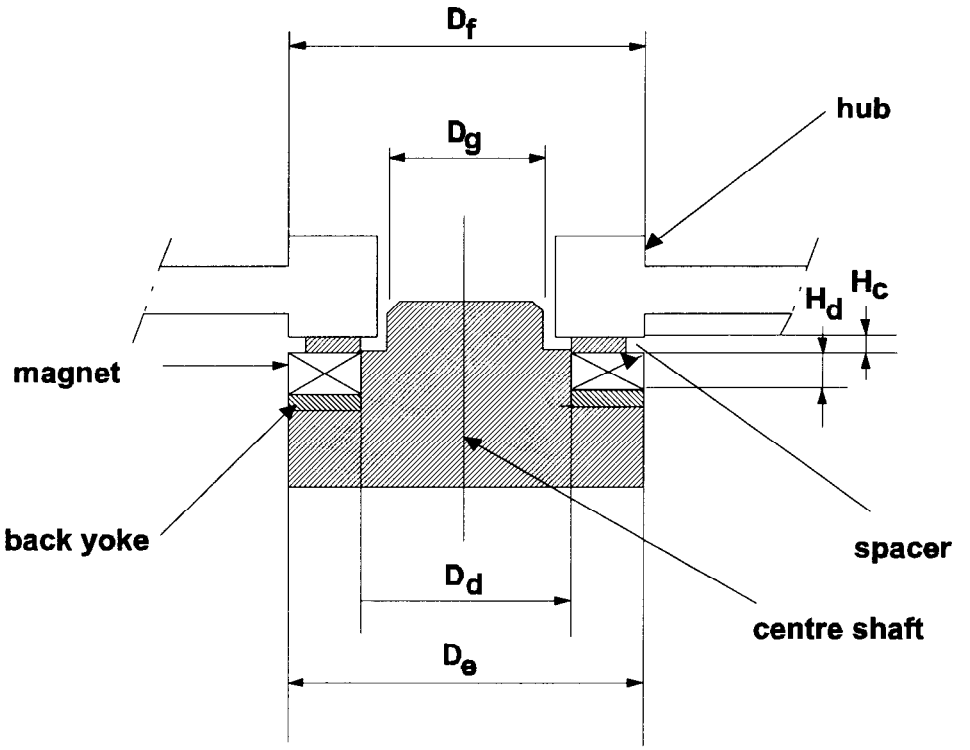

Figure J.1 - Test device for measuring the clamping characteristics of the hub

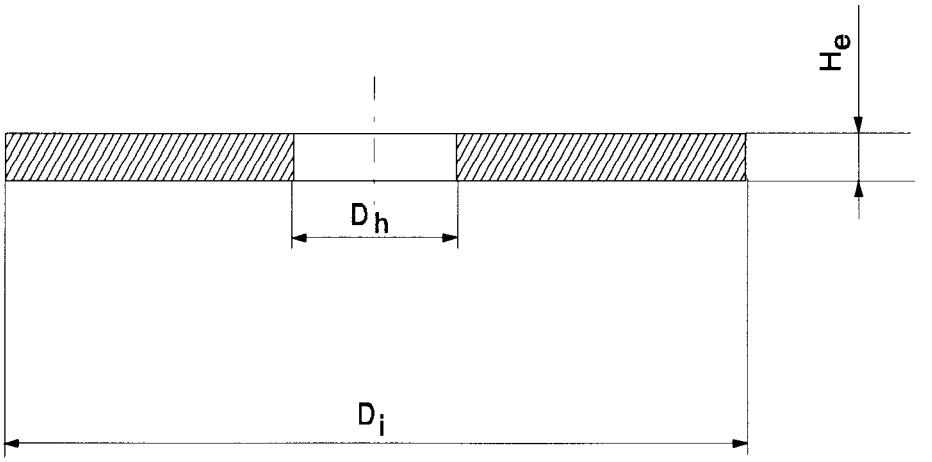

Figure J.2 - Calibration plate of the test device

Copyright International Organization for Standardization
Provided by IHS under license with ISO
No reproduction or networking permitted without license from IHS
Not for Resale

Annex K

(informative)

Derivation of the operating climatic environment for the ODC

This annex gives some background on how some of the conditions of the operating environment in clause 8.1.2 have been derived.

K.1 Standard climatic environment classes

The conditions of the ODC operating environment are, with a few exceptions mentioned below, based on parameter values of the IEC standard climatic environment class 3K3 described in IEC publication 721-3-3. This publication defines environmental classes for stationary use of equipment at weather-protected locations.

The IEC class 3K3 refers to climatic conditions which

"... may be found in normal living or working areas, e.g. living rooms, rooms for general use (theatres, restaurants, etc.), offices, shops, workshops for electronic assemblies and other electrotechnical products, telecommunication centres, storage rooms for valuable and sensitive products."

K.2 Overtemperature considerations

While IEC class 3K3 defines the limits for the room climate only, the ODC operating environment specification in this Standard takes into consideration also system and drive overtemperature. This means that when inserted in a drive, the ODC will sense a temperature which is above the ambient room temperature. The figures in the operating environment specification have been calculated from the assumption that this overtemperature may be up to 20°C.

K.3 Absolute humidity

The introduction of the parameter

absolute humidity [unit: g water / m^3 of air]

is very useful when studying overtemperature. When the temperature rises inside a drive, the relative humidity goes down but the absolute humidity remains substantially constant. So, making room for overtemperature in the operating environment specification affects not only the upper temperature limit but also the lower relative humidity limit. The relationship between these parameters is shown in the climatogram (the RH vs temperature map) of the ODC operating environment, figure K.1.

The absolute humidity restrictions influence the operating environment in the following two ways:

Copyright International Organization for Standardization
Provided by IHS under license with ISO
No reproduction or networking permitted without license from IHS Not for Resale

i) Combinations of high temperatures and high relative humidities are excluded. Such combinations could have negative influence on the performance and the life of ODCs.

ii) Combinations of low temperatures and low relative humidities are excluded . Such combinations are very unlikely to occur in world-wide normal office environments.

K.4 Deviations from the iec standard environment class

Apart from the changes introduced by the overtemperature considerations mentioned above, there are a few more parameter values which are not based on IEC class 3K3. These are:

- Atmospheric pressure

The IEC 3K3 lower limit of 70 kPa has been limited at 65 kPa.

- Temperature

The maximum temperature around the ODC, i.e. room temperature plus overtemperature, has been limited to 50°C (while IEC 3K3 + 20 °C would have become 60 °C). For ODCs according to this Standard, however, the 50 °C limit is considered to be a physical limit above which operation (as well as storage) is not safe.

This means that equipment designers may want to ensure adequate cooling inside the drive especially when the room temperature approaches the upper IEC 3K3 limit of 40°C.

- Further

The rates of change (the gradients) of temperature and relative humidity are not according to IEC 3K3.

K.5 Wet bulb temperature specifications

Instead of specifying limits for the absolute humidity, earlier standards for ODCs as well as those for other digital data storage media often use restrictions of the parameter:

wet bulb temperature [unit: °C]

in order to avoid too severe combinations of high temperatures and high relative humidities.

In order to facilitate comparisons between different specifications, figure K.2 shows wet bulb temperatures of interest for the ODC operating environment, as well as for the testing and storage environments. Since wet bulb temperatures vary slightly with the atmospheric pressure, the diagram is valid for the normal pressure of 101,3 kPa.

Copyright International Organization for Standardization
Provided by IHS under license with ISO
No reproduction or networking permitted without license from IHS Not for Resale

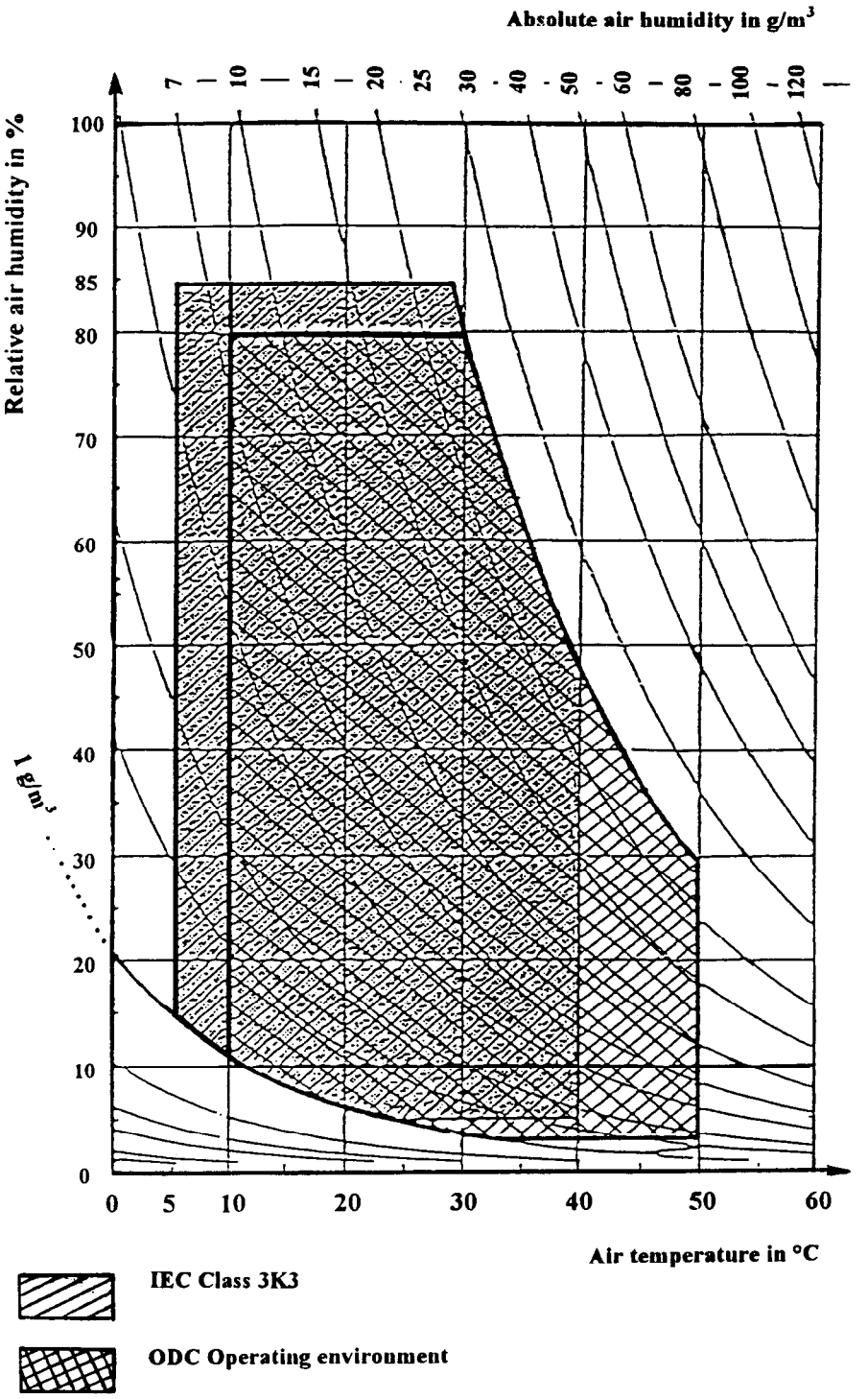

Figure K.1 - Climatogram of IEC Class 3K3 and the ODC operating environment

Copyright International Organization for Standardization
Provided by IHS under license with ISO
No reproduction or networking permitted without license from IHS
Not for Resale

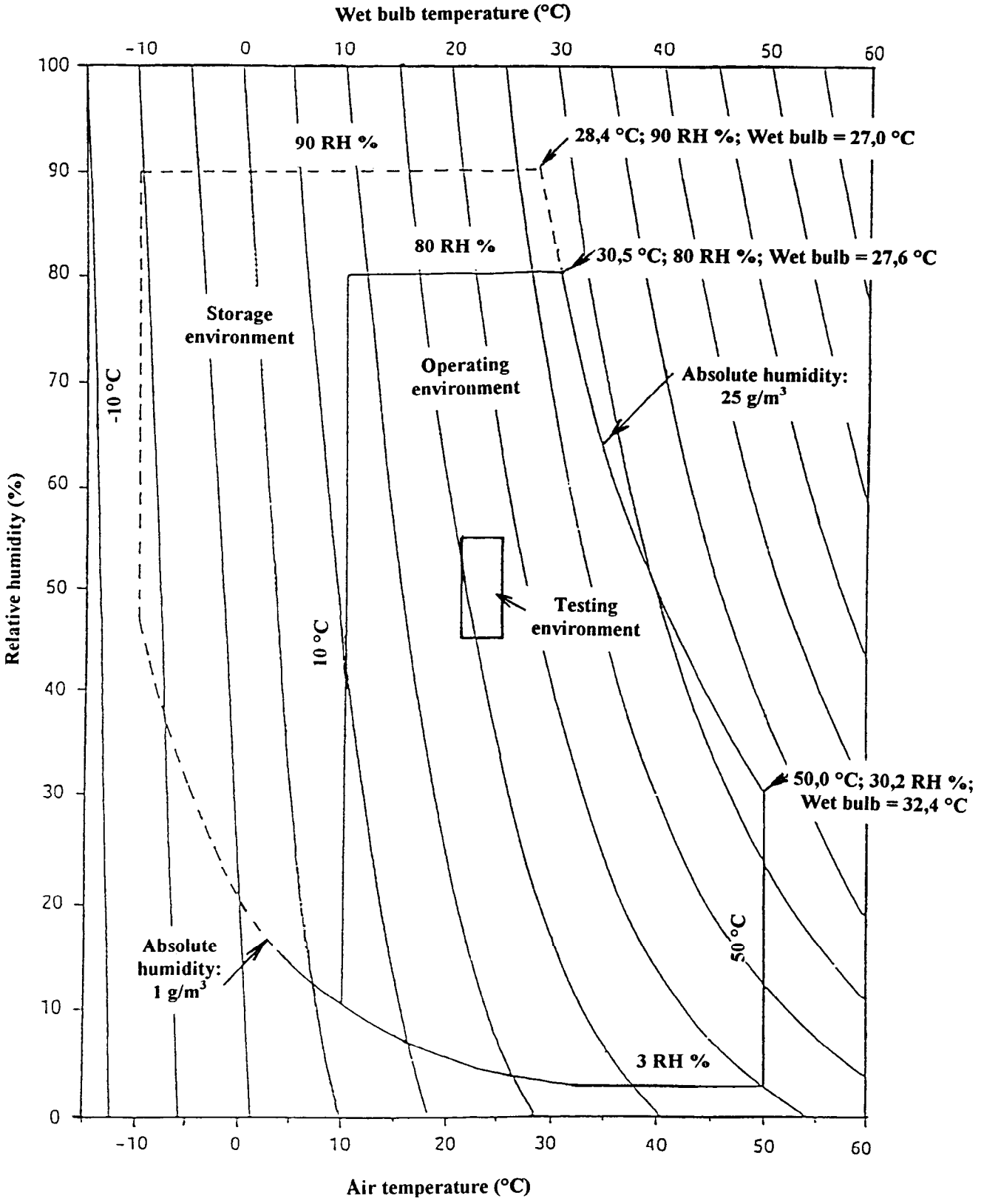

Figure K.2 - Wet bulb temperatures of the operating and storage environments

Copyright International Organization for Standardization
Provided by IHS under license with ISO
No reproduction or networking permitted without license from IHS
Not for Resale

Annex L

(informative)

Description of the office environment

Due to their construction and mode of operation optical disk cartridges have considerable resistance to the effects of dust particles around and inside the disk drive. Consequently it is not generally necessary to take special precaution to maintain a sufficiently low concentration of dust particles.

Operation in heavy concentrations of dust should be avoided, e.g. in a machine shop or on a building site.

Office environment implies an environment in which personnel may spend a full working day without protection and without suffering temporary or permanent discomfort.

Copyright International Organization for Standardization
Provided by IHS under license with ISO
No reproduction or networking permitted without license from IHS
Not for Resale

Annex M

(informative)

Transportation guidelines

M.1 As transportation occurs under a wide range of temperature and humidity variations, for differing periods, by many methods of transport and in all parts of the world it is not possible to specify conditions for transportation or for packaging.

M.2 The form of packaging should be agreed between sender and recipient or, in the absence of such agreement, is the responsibility of the sender. It should take account of the following hazards.

M.2.1 Temperature and humidity

Insulation and wrapping should be designed to maintain the conditions for storage over the estimated period of transportation.

M.2.2 Impact loads and vibration

i) Avoid mechanical loads that would distort the shape of the cartridge.

ii) Avoid dropping the cartridge.

iii) Cartridges should be packed in a rigid box containing adequate shock-absorbent material.

iv) The final box should have a clean interior and a construction that provides sealing to prevent the ingress of dirt and moisture.

Copyright International Organization for Standardization
Provided by IHS under license with ISO
No reproduction or networking permitted without license from IHS
Not for Resale

© ISO/IEC

ICS 35.220.30

Descriptors: data processing, information interchange, data recording, data recording devices, optical disks, CD-WORM, optical disk cartridges, specifications, dimensions, physical properties, mechanical properties, optical properties, track formats, tests, conformity tests, metalworking machinery.

Price based on 105 pages

Copyright International Organization for Standardization
Provided by IHS under license with ISO
No reproduction or networking permitted without license from IHS

Not for Resale