INTERNATIONAL STANDARD

ISO/IEC 13575

First edition
1995-03-01

Information technology — Telecommunications and information exchange between systems — 50-pole interface connector mateability dimensions and contact number assignments

Technologies de l'information — Télécommunications et échange d'information entre systèmes — Dimensions de raccordement du connecteur d'interface de 50 pôles et attributions du numéro de contact

Reference number
ISO/IEC 13575:1995(E)

Copyright International Organization for Standardization
Provided by IHS under license with ISO
No reproduction or networking permitted without license from IHS

Not for Resale

Foreword

ISO (the International Organization for Standardization) and IEC (the International Electrotechnical Commission) form the specialized system for worldwide standardization. National bodies that are members of ISO or IEC participate in the development of International Standards through technical committees established by the respective organization to deal with particular fields of technical activity. ISO and IEC technical committees collaborate in fields of mutual interest. Other international organizations, governmental and non-governmental, in liaison with ISO and IEC, also take part in the work.

In the field of information technology, ISO and IEC have established a joint technical committee, ISO/IEC JTC 1. Draft International Standards adopted by the joint technical committee are circulated to national bodies for voting. Publication as an International Standard requires approval by at least 75 % of the national bodies casting a vote.

International Standard ISO/IEC 13575 was prepared by Joint Technical Committee ISO/IEC JTC 1, *Information technology*, Subcommittee SC 6, *Telecommunications and information exchange between systems*.

© ISO/IEC 1995
All rights reserved. Unless otherwise specified, no part of this publication may be reproduced or utilized in any form or by any means, electronic or mechanical, including photocopying and microfilm, without permission in writing from the publisher.

ISO/IEC Copyright Office • Case Postale 56 • CH-1211 Genève 20 • Switzerland

Printed in Switzerland

Copyright International Organization for Standardization
Provided by IHS under license with ISO
No reproduction or networking permitted without license from IHS
Not for Resale

Information technology - Telecommunications and information exchange between systems - 50-pole interface connector mateability dimensions and contact number assignments

1 Scope

This International Standard specifies a 50-pole connector, including the necessary mateability dimensions and the assignment of contact numbers, for use at the interface between data terminal equipment (DTE) and data circuit terminating equipment (DCE). It is applicable where the functional characteristics of the interface conform to CCITT Recommendation V.24 and the electrical characteristics conform to ITU-T Recommendation V.12.

2 Normative references

The following ITU-T (CCITT) Recommendations and International Standards contain certain provisions which, through reference in this text, constitute provisions of this International Standard. At the time of publication, the editions indicated were valid. All ITU-T (CCITT) Recommendations and International Standards are subject to revision, and parties to agreements based on this International Standard are encouraged to investigate the possibility of applying the most recent editions of the standards/recommendations indicated below. Members of IEC and ISO maintain registers of currently valid International Standards. The ITU-T Secretariat maintains a list of currently valid ITU-T (CCITT) Recommendations.

CCITT Recommendation V.24: 1988, *List of definitions for interchange circuits between data terminal equipment and data circuit-terminating equipment.*

ITU-T Recommendation V.12: 1995, *Electrical characteristics for balanced interchange circuits with data signalling rates up to 52 Mbit/s.*

ITU-T Recommendation V.130: 1995, *ISDN Terminal Adapter Framework.*

IEC 48B (Sec.):1993, *Detail specification for a range of shielded connectors with trapezoidal shaped shells and non-removable rectangular contacts on a 1,27 x 2,54 mm (0,050 x 0,100 in) centerline.*

3 Definitions

For the purposes of this standard the following definitions apply:

3.1 connector housing : A part of a connector into which the inserts and contacts are assembled.

3.2 contact arrangement : The number, spacing and configuration of contacts in a component.

3.3 female contact : A contact intended to make electrical engagement on its inner surface.

3.4 intermateable connectors : Two connectors that are capable of being connected to each other electrically and mechanically without regard to their performance.

3.5 latching device : A feature incorporated in certain components to provide mechanical retention of their mating parts.

3.6 male contact : A contact intended to make electrical engagement on its outer surface.

3.7 seating plane : The surface that the connector bottoms on when fully mated.

4 Connector

A 50-pole connector shall be provided for the DTE/DCE interface. Figures 1 to 4 illustrate the connector. Only those dimensions that are essential for mating are shown.

The DTE-DCE interface point is defined at the point between the cable connector associated with the cable attached or wired to the DTE and the equipment connector associated with the DCE (see figure 5).

Figure 1 illustrates the cable connector which has 50 male contacts in a connector housing. Figure 2 illustrates the equipment connector which has 50 female contacts in a connector housing. The connector housing on the equipment connector is dimensioned to fit inside the connector housing of the cable connector (see figures 3 and 4). Figures 3 and 4 give contact numbering and illustrate the dimensions and latching mechanism for the cable and equipment connectors respectively.

Copyright International Organization for Standardization
Provided by IHS under license with ISO
No reproduction or networking permitted without license from IHS
Not for Resale

5 Assignment of Contacts

The assignment of contact numbers is given in table 2. The list of interchange circuits is given in table 1.

6 Shielding

The 50-pole connector is a shielded connector.

Table 1 - Interchange Circuits

102	Signal common
102a	DTE common return
102b	DCE common return
103	Transmitted data
104	Received data
107	Data set ready
108/2	Data terminal ready
113	Transmitter signal element timing (DTE)
114	Transmitter signal element timing (DCE)
115	Receiver signal element timing (DCE)
142	Test indicator

All circuits should have both sides (the A and B) assigned to a twisted pair in the interconnecting cable to minimize cross-talk.

Table 2 -Assignment of contact numbers

Contact	Circuit	Description
1,7,13,19,25,26,32,38,44,50	102	Signal Ground
2	115A	Receiver signal element timing (DCE)
3	107A	Data set ready
4	104A	Received data
5,30,14 -18, 39-43		(reserved) to DCE
6	114A	Transmitter signal element timing (DCE)
8	108/2A	Data terminal ready
9	113A	Transmitter signal element timing (DTE)
10		(reserved for national loopbacks)
11	103A	Send data
12		(reserved for national loopbacks)
24		Test indicator
27	115B	Receiver signal element timing (DCE)
28	107B	Data set ready
29	104B	Received data
31	114B	Transmitter signal element timing (DCE)
33	108/2B	Data terminal ready
34	113B	Transmitter signal element timing (DTE)
35		(reserved for national loopbacks)
36	103B	Received data
37		(reserved for national loopbacks)
20-23, 45-48		(reserved) from DCE
49	142B	Test indicator

Copyright International Organization for Standardization
Provided by IHS under license with ISO
No reproduction or networking permitted without license from IHS
Not for Resale

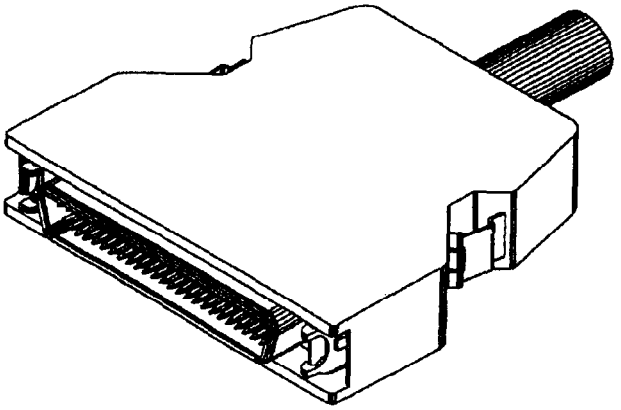

Figure 1 — Cable connector (male contacts)

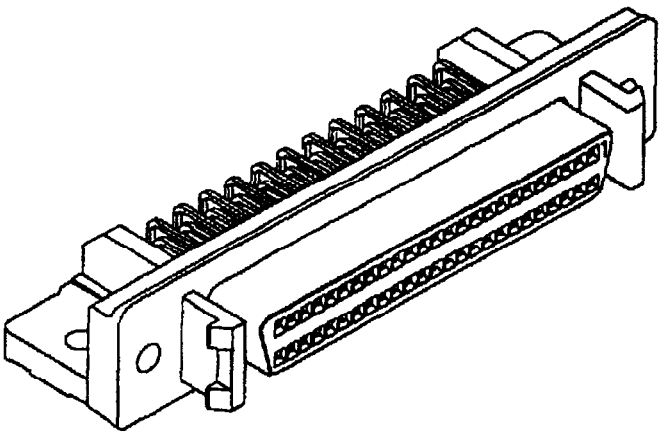

Figure 2 — Equipment connector (female contacts)

Copyright International Organization for Standardization
Provided by IHS under license with ISO
No reproduction or networking permitted without license from IHS

Not for Resale

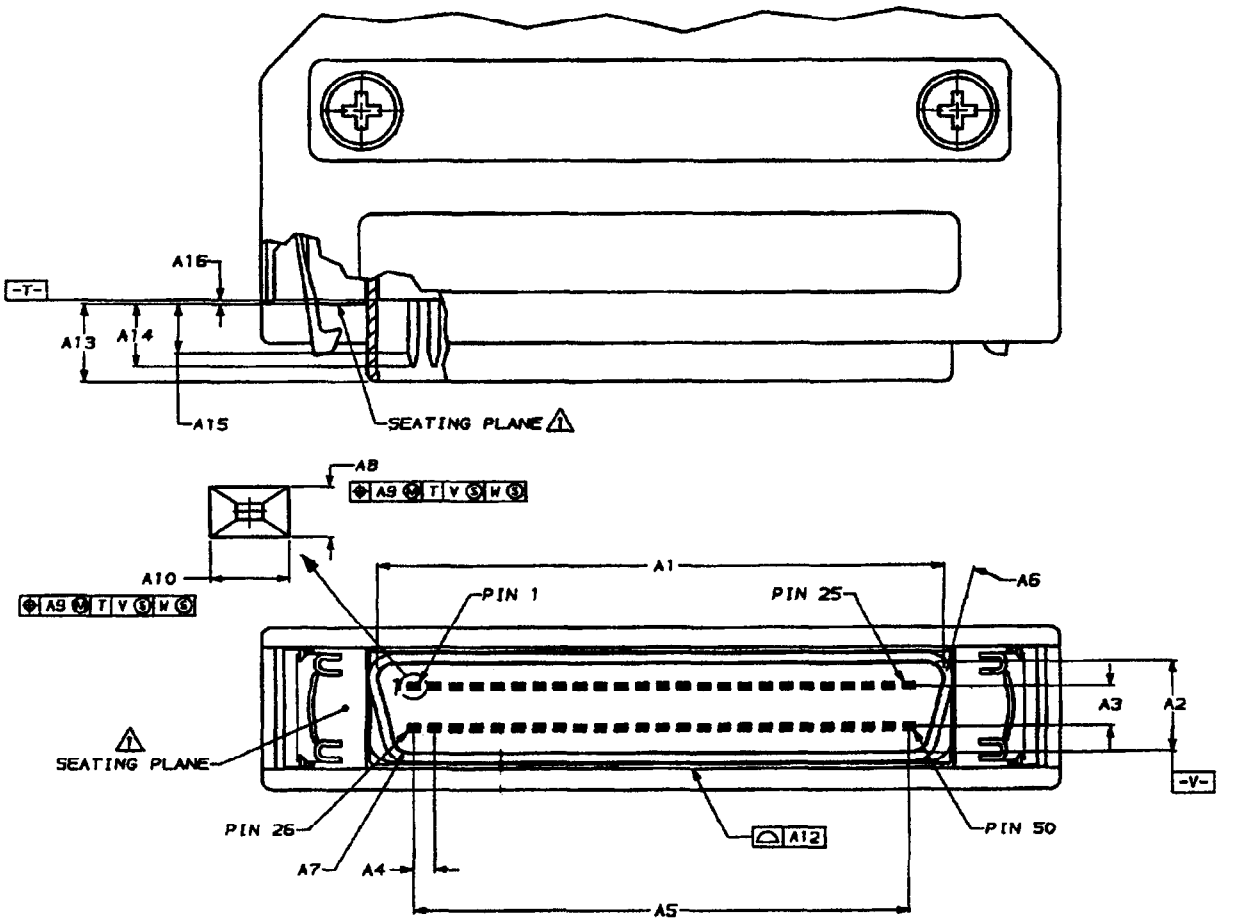

	50 POSITION	
DIMENSIONS	MILLIMETERS	INCHES
A1	34,85	1,372
A2	5,69	,224
A3	2,54	,100
A4	1,27	,050
A5	30,48	1,200
A6	15°	15°
A7	1,04 R	,041 R
A8	0,40± ,01	0,156 ±,0004
A9	0,23	,009
A10	0,60 ± ,03	,024 ± ,001
A11	0,23	,009
A12	0,06	,002
A13	4,90 ±,10	,193 ± ,004
A14	4,27 MAX	,168 MAX
A15	2,64 MIN	,104 MIN
A16	0,38 MAX	,015 MAX

Figure 3 — Mating dimensions (cable connector)

Copyright International Organization for Standardization
Provided by IHS under license with ISO
No reproduction or networking permitted without license from IHS
Not for Resale

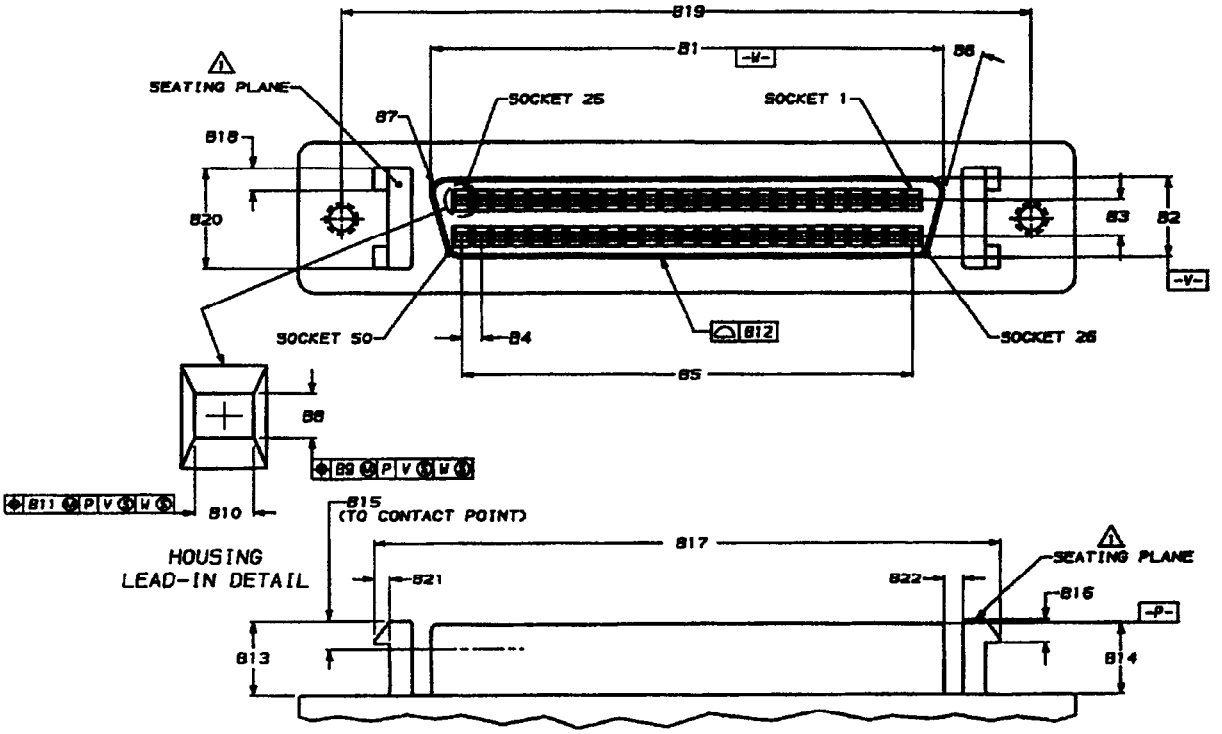

	50 POSITION	
DIMENSIONS	MILLIMETERS	INCHES
B1	34,70	1,366
B2	5,54	,218
B3	2,54	,100
B4	1,27	,050
B5	30,48	1,200
B6	15°	15°
B7	1,00 R	,039 R
B8	0,61 ± ,05	0,24 ± ,002
B9	0,15	,005
B10	0,86 ± 1,0	0,34 ± ,004
B11	0,15	,006
B12	0,05	,002
B13	5,10 ±,05	,201 ± ,002
B14	5,00 ±,13	,197 ±,005
B15	1,85 MAX	,073 MAX
B16	1,50 MAX	,059 ± ,001
B17	42,29 ± ,10	1,665 ± ,004
B18	1,52 MIN	,060 MIN
B19	46,48 ± ,13	1,87870 ± 005
B20	5,99 ±,08	,236 ± ,003
B21	0,88 MIN	,035 MIN
B22	1,27 MIN	,050 MIN

Figure 4 — Mating dimensions (equipment connector)

Copyright International Organization for Standardization
Provided by IHS under license with ISO
No reproduction or networking permitted without license from IHS
Not for Resale

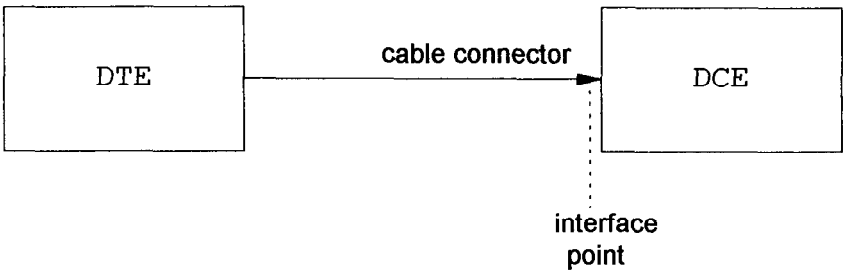

Figure 5 — Interface point

Copyright International Organization for Standardization
Provided by IHS under license with ISO
No reproduction or networking permitted without license from IHS
Not for Resale

© ISO/IEC

ICS 35.100.10

Descriptors: data processing, information interchange, telecommunications, data transmission, data terminal equipment, computer interfaces, connecting equipment, electric connectors, multi-contact connectors, dimensions, position (location), numbering.

Price based on 6 pages

Copyright International Organization for Standardization
Provided by IHS under license with ISO
No reproduction or networking permitted without license from IHS

Not for Resale