INTERNATIONAL STANDARD

ISO/IEC 13549

First edition
1993-12-15

Information technology — Data interchange on 130 mm optical disk cartridges — Capacity: 1,3 gigabytes per cartridge

Technologies de l'information — Échange de données sur cartouches de disque optique de diamètre 130 mm *— Capacité: 1,3 gigabyte par cartouche*



Reference number
ISO/IEC 13549:1993(E)

Copyright International Organization for Standardization
Provided by IHS under license with ISO
No reproduction or networking permitted without license from IHS

Not for Resale

Contents

		Page
Section 1 - General		**1**
1	Scope	**1**
2	Conformance	**1**
2.1	Optical disk cartridge (ODC)	**1**
2.2	Generating system	**1**
2.3	Receiving system	**1**
3	Normative reference	**1**
4	Definitions	**2**
4.1	band	**2**
4.2	case	**2**
4.3	Channel bit	**2**
4.4	Clamping Zone	**2**
4.5	control track	**2**
4.6	Cyclic Redundancy Check (CRC)	**2**
4.7	defect management	**2**
4.8	disk reference plane	**2**
4.9	entrance surface	**2**
4.10	Error Correction Code (ECC)	**2**
4.11	format	**2**
4.12	fully embossed disk	**2**
4.13	fully rewritable disk	**2**
4.14	hub	**2**
4.15	interleaving	**2**
4.16	Kerr rotation	**2**
4.17	land and groove	**2**
4.18	logical track	**3**
4.19	Logical ZCAV	**3**
4.20	mark	**3**
4.21	ODC with write once, read multiple functionality	**3**
4.22	optical disk	**3**
4.23	optical disk cartridge (ODC)	**3**
4.24	partially embossed disk	**3**
4.25	physical track	**3**
4.26	physical track group	**3**

© ISO/IEC 1994
All rights reserved. No part of this publication may be reproduced or utilized in any form or by any means, electronic or mechanical, including photocopying and microfilm, without permission in writing from the publisher
ISO/IEC Copyright Office * Case Postale 56 * CH-1211 Genève 20 * Switzerland
Printed in Switzerland

Copyright International Organization for Standardization
Provided by IHS under license with ISO
No reproduction or networking permitted without license from IHS
Not for Resale

4.27	pitch	3
4.28	polarization	3
4.29	pre-recorded mark	3
4.30	read power	3
4.31	recording layer	3
4.32	Reed-Solomon code	3
4.33	spindle	3
4.34	substrate	3
4.35	write-inhibit hole	3
5	Conventions and notations	4
5.1	Representation of numbers	4
5.2	Names	4
6	List of acronyms	4
7	General description of the optical disk cartridge	4
8	General requirements	5
8.1	Environments	5
8.1.1	Testing environment	5
8.1.2	Operating environment	5
8.1.3	Storage environment	6
8.1.4	Transportation	6
8.2	Temperature shock	6
8.3	Safety requirements	6
8.4	Flammability	6
9	Reference Drive	6
9.1	Optical system	6
9.2	Optical beam	8
9.3	Read channels	8
9.4	Tracking	8
9.5	Rotation of the disk	8
Section 2 - Mechanical and physical characteristics		9
10	Dimensions and mechanical characteristics of the case	9
10.1	General	9
10.2	Case drawings	9
10.3	Sides, reference axes and reference planes	9
10.3.1	Relationship of Sides A and B	9
10.3.2	Reference axes and case reference planes	9
10.4	Materials	9
10.5	Mass	9
10.6	Overall dimensions	10
10.7	Location hole	10
10.8	Alignment hole	11
10.9	Surfaces on reference plane P	11
10.10	Insertion slots and detent features	12

Copyright International Organization for Standardization
Provided by IHS under license with ISO
No reproduction or networking permitted without license from IHS
Not for Resale

10.11	Gripper slots	12
10.12	Write-inhibit holes	13
10.13	Media sensor holes	13
10.14	Head and motor window	14
10.15	Shutter	14
10.16	Slot for shutter opener	14
10.17	Shutter sensor notch	15
10.18	User label areas	15
11	Dimensional and physical characteristics of the disk	16
11.1	Dimensions of the disk	16
11.1.1	Outer diameter	16
11.1.2	Thickness	16
11.1.3	Clamping zone	16
11.1.4	Clearance zone	16
11.2	Mass	16
11.3	Moment of inertia	16
11.4	Imbalance	16
11.5	Axial deflection	16
11.6	Axial acceleration	16
11.7	Dynamic radial runout	17
11.8	Radial acceleration	17
11.9	Tilt	17
12	Drop test	18
13	Interface between disk and drive	18
13.1	Clamping Technique	18
13.2	Dimensions of the hub	18
13.2.1	Outer diameter of the hub	18
13.2.2	Height of the hub	18
13.2.3	Diameter of the centre hole	18
13.2.4	Height of the top of the centre hole at diameter D_9	18
13.2.5	Centring length at diameter D_9	18
13.2.6	Radius at diameter D_9	18
13.2.7	Chamfer at diameter D_8	19
13.2.8	Outer diameter of the magnetizable ring	19
13.2.9	Inner diameter of the magnetizable ring	19
13.2.10	Thickness of the magnetizable material	19
13.2.11	Position of the top of the magnetizable ring relative to the disk reference plane	19
13.3	Clamping method	19
13.4	Clamping force	19
13.5	Capture cylinder for the hub	19
13.6	Disk position in the operating condition	20
14	Characteristics of the substrate	35
14.1	Index of refraction	35
14.2	Thickness	35
15	Characteristics of recorded and embossed information	35

Copyright International Organization for Standardization
Provided by IHS under license with ISO
No reproduction or networking permitted without license from IHS
Not for Resale

15.1	Method of testing	**35**
15.1.1	Environment	**35**
15.1.2	Use of the Reference Drive	**35**
15.1.3	Read conditions	**36**
15.1.4	Write conditions	**36**
15.1.5	Erase conditions	**37**
15.2	Baseline reflectance	**37**
15.2.1	General	**37**
15.2.2	Measured value	**37**
15.2.3	Requirement	**37**
15.3	Magneto-optical recording in the Data Zone	**38**
15.3.1	Resolution	**38**
15.3.2	Imbalance of magneto-optical signal	**38**
15.3.3	Vertical birefringence	**38**
15.3.4	Figure of merit for magneto-optical signal	**38**
15.3.5	Narrow-band signal-to-noise ratio	**39**
15.3.6	Cross-talk ratio	**39**
15.3.7	Ease of erasure	**40**
15.4	Characteristics of information	**41**
15.4.1	Groove-related signals	**41**
15.4.2	Properties of pre-recorded marks	**42**
15.4.3	Parameters of the read characteristics	**43**
Section 3 - Format of information		**44**
16	Features	**44**
16.1	Geometry of physical tracks	**44**
16.1.1	Shape	**44**
16.1.2	Direction of rotation	**44**
16.1.3	Physical track pitch	**44**
16.2	Formatted Zone	**44**
16.2.1	Data Zone	**44**
16.2.2	Reflective Zone	**45**
16.2.3	SFP Transition Zone	**45**
16.2.4	Inner Control Track SFP Zone	**45**
16.2.5	Inner Manufacturer Zone	**45**
16.2.6	Outer Manufacturer Zone	**45**
16.2.7	Outer Control Track SFP Zone	**45**
16.2.8	Lead-out Zone	**45**
16.2.9	Track number	**45**
16.3	Control tracks	**46**
16.4	PEP Zone	**47**
16.4.1	Recording in the PEP Zone	**47**
16.4.2	Cross-track loss	**47**
16.4.3	Format of the tracks of the PEP Zone	**48**
16.4.4	Summary of the format of the Data field of a sector	**51**
16.5	Control Track SFP Zones	**51**

Copyright International Organization for Standardization
Provided by IHS under license with ISO
No reproduction or networking permitted without license from IHS
Not for Resale

16.5.1 Duplicate of the PEP information 52
16.5.2 Media information 52
16.5.3 System Information 57
16.5.4 Unspecified content 58

16.6 Requirements for interchange of a user-recorded cartridge 58

16.6.1 Requirements for reading 58
16.6.2 Requirements for writing and erasing 58

Section 4 - Physical and logical format 59

17 Physical format 59

17.1 Track layout 59

17.1.1 Tracking 59

17.2 Sector format 60

17.2.1 Sector Mark 60

17.2.2 VFO fields 61
17.2.3 Address Mark (AM) 61
17.2.4 ID fields 61
17.2.5 Postamble (PA) 62
17.2.6 Offset Detection Flag (ODF) 62
17.2.7 Gap 62
17.2.8 Flag 62
17.2.9 Auto Laser Power Control (ALPC) 62
17.2.10 Sync 62
17.2.11 Data field 62
17.2.12 Buffer 63

17.3 Recording code 63

18 Logical format 64

18.1 Format of the Data Zone 64

18.1.1 Defect Management Areas 64
18.1.2 Type R/W (Fully rewritable disks) 66
18.1.3 Type O-ROM (Fully embossed disks) 66
18.1.4 Type P-ROM (Partially embossed disks) 67
18.1.5 Type WO (Write once disks) 67

18.2 Partitioning 67

18.2.1 Type R/W (Fully rewritable disks) 67
18.2.2 Type P-ROM (Partially embossed disks) 67
18.2.3 Type O-ROM (Fully embossed disks) 67
18.2.4 Type WO (Write once disks) 67

18.3 Defect management 70

18.3.1 R/W and WO Zones: Spare sectors 70
18.3.2 Embossed groups: Parity sectors 73

Section 5 - Characteristics of User Data 74

Copyright International Organization for Standardization
Provided by IHS under license with ISO
No reproduction or networking permitted without license from IHS
Not for Resale

19	Minimum quality of a sector	**74**
19.1	Headers	**74**
19.1.1	Sector Mark	**74**
19.1.2	ID fields	**74**
19.2	User-written data	**74**
19.3	Embossed data	**74**
20	Data interchange requirements	**74**
20.1	Tracking	**74**
20.2	User-written data	**74**
20.3	Embossed data	**74**
20.4	Quality of the disk	**74**

Annexes

A - Air cleanliness class 100 000 **75**

B - CRC for ID fields **77**

C - Definition of write pulse width **78**

D - Interleave, CRC, ECC, Resync for the Data field **79**

E - Measurement of the figure of merit **85**

F - Test method for measuring the adsorbant force of the hub **86**

G - Office environment **88**

H - Derivation of the operating climatic environment **88**

J - Transportation **92**

K - Track deviation measurement **92**

L - Read power, write power and erase power for 50 Hz operation **96**

M - Guidelines for sector retirement **97**

N - Guidelines for the use of ODCs of Type WO **97**

P - Measure of substrate vertical birefringence **98**

Copyright International Organization for Standardization
Provided by IHS under license with ISO
No reproduction or networking permitted without license from IHS
Not for Resale

Foreword

ISO (the International Organization for Standardization) and IEC (the International Electrotechnical Commission) form the specialized system for worldwide standardization. National bodies that are members of ISO or IEC participate in the development of International Standards through technical committees established by the respective organization to deal with particular fields of technical activity. ISO and IEC technical committees collaborate in fields of mutual interest. Other international organizations, governmental and non-governmental, in liaison with ISO and IEC, also take part in the work.

In the field of information technology, ISO and IEC have established a joint technical committee, ISO/IEC JTC 1. Draft International Standards adopted by the joint technical committee are circulated to national bodies for voting. Publication of an International Standard requires approval by at least 75% of the national bodies casting a vote.

International Standard ISO/IEC 13549 was prepared by the European Computer Manufacturers Association (as Standard ECMA-184) and was adopted, under a special "fast-track procedure", by Joint Technical Committee ISO/IEC JTC 1 *Information technology*, in parallel with its approval by national bodies of ISO and IEC.

Annexes A to F form an integral part of this International Standard, annexes G to P are for information only.

Patents

During the preparation of the ECMA standard, information was gathered on patents upon which application of the standard might depend. Relevant patents were identified as belonging to IBM and the Sony Corporation. However, neither ECMA nor ISO/IEC can give authoritative or comprehensive information about evidence, validity or scope of patent and like rights. The patent holders have stated that licences will be granted under reasonable and non-discriminatory terms. Communications on this subject should be addressed to

IBM
Storage Systems Products Division
Tucson, Arizona 85744 USA

Sony Corporation
Licensing and Trademark Division
6-7-35 Kitashinagawa
Shinagawa-ku
Tokyo 141
Japan

Copyright International Organization for Standardization
Provided by IHS under license with ISO
No reproduction or networking permitted without license from IHS
Not for Resale

Introduction

This International Standard specifies the characteristics of 130 mm Optical Disk Cartridges (ODC) with a capacity of 1,3 Gbytes per cartridge. This International Standard is the first of a series of International Standards for ODCs of different capacities, based on the optical disk cartridge specified in ISO/IEC 10089. Whilst the latter specifies a fully re-writable disk, this International Standard specifies four related, but different implementations of such cartridges, viz.

Type R/W Provides for data to be written, read, and erased many times over the whole of both recording surfaces of the disk using the thermo-magnetic and magneto-optical effects.

Type P-ROM Provides for a part of both disk surfaces to be pre-recorded and reproduced by stamping or other means. This part of the disk is read without recourse to the magneto-optical effect. All parts which are not pre-recorded, provide for data to meet the requirements of Type R/W.

Type O-ROM Provides for the whole of both disk surfaces to be pre-recorded and reproduced by stamping or other means. This type of disk is read without recourse to the magneto-optical effect.

Type WO Provides write once, read multiple functionality on the whole of both disk surfaces using the thermo-magnetic and magneto-optical effects.

Copyright International Organization for Standardization
Provided by IHS under license with ISO
No reproduction or networking permitted without license from IHS
Not for Resale

Information technology — Data interchange on 130 mm optical disk cartridges — Capacity: 1,3 gigabytes per cartridge

Section 1 - General

1 Scope

This International Standard specifies

- the conditions for conformance testing;
- the environments in which the cartridges are to be operated and stored;
- the mechanical, physical and dimensional characteristics of the case and of the cartridges, so as to provide mechanical interchangeability between the data processing systems;
- the format of the information on the disk, both embossed and user-written, including the physical disposition of the tracks and sectors, the error correction codes, and the modulation method used;
- the characteristics of the embossed information on the disk;
- the magneto-optical characteristics of the disk, enabling processing systems to write data onto the disk;
- the minimum quality of user-written data on the disk, enabling data processing systems to read data from the disk.

This International Standard provides for interchange between optical disk drives. Together with a standard for volume and file structure, it provides for full data interchange between data processing systems.

2 Conformance

2.1 Optical disk cartridge (ODC)

An optical disk cartridge claiming conformance with this International Standard shall specify its Type. It shall be in conformance if it meets all mandatory requirements specified herein for that Type.

2.2 Generating system

A claim of conformance with this International Standard shall specify which Type(s) is (are) supported. A system generating an ODC for interchange shall be entitled to claim conformance with this International Standard if it meets the mandatory requirements of this Standard for the Type(s) specified.

2.3 Receiving system

A claim of conformance with this International Standard shall specify which Type(s) is (are) supported.

A system receiving an ODC for interchange shall be entitled to claim conformance with this International Standard if it is able to handle any ODC which conforms to this International Standard for the Type(s) specified.

3 Normative reference

The following standard contains provisions which, through reference in this text, constitute provisions of this International Standard. At the time of publication, the edition indicated was valid. All standards are subject to revision, and parties to agreements based on this International Standard are encouraged to investigate the possibility of applying the most recent editions of the standard listed below.

Copyright International Organization for Standardization
Provided by IHS under license with ISO
No reproduction or networking permitted without license from IHS
Not for Resale

IEC 950:1991, *Safety of information technology equipment, including electrical business equipment*

4 Definitions

For the purposes of this International Standard, the following definitions apply.

4.1 **band** : A part of the Data Zone comprising a fixed number of consecutive physical tracks with data embossed or recorded at a constant frequency.

4.2 **case** : The housing for an optical disk, that protects the disk and facilitates disk interchange.

4.3 **Channel bit** : The smallest element of data on a disk. It is recorded as either a space or a mark. Two channel bits are used to represent one user bit.

4.4 **Clamping Zone** : The annular part of the disk within which the clamping force is applied by the clamping device.

4.5 **control track** : A track containing the information on media parameters and format necessary for writing, reading and erasing the remaining tracks on the optical disk.

4.6 **Cyclic Redundancy Check (CRC)** : A method for detecting errors in data.

4.7 **defect management** : A method for handling the defective areas on the disk.

4.8 **disk reference plane** : A plane defined by the perfectly flat annular surface of an ideal spindle onto which the Clamping Zone of the disk is clamped, and which is normal to the axis of rotation.

4.9 **entrance surface** : The surface of the disk on to which the optical beam first impinges.

4.10 **Error Correction Code (ECC)** : An error-detecting code designed to correct certain kinds of errors in data.

4.11 **format** : The arrangement or layout of the data on the disk.

4.12 **fully embossed disk** : An optical disk cartridge in which all data fields in the Data Zone are embossed.

4.13 **fully rewritable disk** : An optical disk cartridge in which the data in specified areas can be rewritten by an optical beam.

4.14 **hub** : The central feature on the disk which interacts with the spindle of the disk drive to provide radial centring and the clamping force.

4.15 **interleaving** : The process of allocating the physical sequence of units of data so as to render the data more immune to burst errors.

4.16 **Kerr rotation** : The rotation of the plane of polarization of an optical beam upon reflection from the recording layer as caused by the magneto-optical Kerr effect.

4.17 **land and groove** : A trench-like feature of the disk, applied before the recording of any information, and used to define the track location. The groove is located nearer to the entrance surface than the land with which it is paired to form a track.

Copyright International Organization for Standardization
Provided by IHS under license with ISO
No reproduction or networking permitted without license from IHS
Not for Resale

4.18 **logical track :** Either 31 consecutive sectors for disks with 512-byte sectors or 17 consecutive sectors for disks with 1024-byte sectors. The first sector of each logical track is assigned Sector Number 0.

4.19 **Logical ZCAV :** A disk format requiring Zoned Constant Angular Velocity operation and with tracks in the Data Zone all being logical tracks.

4.20 **mark :** A feature of the recording layer which may take the form of a magnetic domain, a pit, or any other type or form that can be sensed by the optical system. The pattern of marks represents the data on the disk.

4.21 **ODC with write once, read multiple functionality :** An optical disk cartridge which can be initialized only once and the data in specified areas can be written only once after initialization.

4.22 **optical disk :** A disk that will accept and retain information in the form of marks in a recording layer or have these marks pre-recorded, that can be read with an optical beam.

4.23 **optical disk cartridge (ODC) :** A device consisting of a case containing an optical disk.

4.24 **partially embossed disk :** An optical disk cartridge which contains both rewritable and embossed data fields in the Data Zone.

4.25 **physical track :** The path which is followed by the focus of the optical beam during one revolution of the disk.

4.26 **physical track group :** A fixed number of consecutive physical tracks in the Data Zone.

4.27 **pitch :** The distance between adjacent physical track centrelines, measured in a radial direction.

4.28 **polarization :** The direction of polarization of an optical beam is the direction of the electric vector of the beam.

NOTE 1 - The plane of polarization is the plane containing the electric vector and the direction of propagation of the beam. The polarization is right-handed when to an observer looking in the direction of propagation of the beam, the end-point of the electric vector would appear to describe an ellipse in the clockwise sense.

4.29 **pre-recorded mark :** A mark so formed as to be unalterable by magneto-optical means.

4.30 **read power :** The optical power, incident at the entrance surface of the disk, used when reading.

NOTE 2 - It is specified as a maximum power that may be used without damage to the written data. Lower power may be used provided that the signal-to-noise ratio and other requirements of this International Standard are met.

4.31 **recording layer :** A layer of the disk on, or in, which data is written during manufacture and/or use.

4.32 **Reed-Solomon code :** An error detection and/or correction code which is particularly suited to the correction of errors which occur in bursts or are strongly correlated.

4.33 **spindle :** The part of the disk drive which contacts the disk and/or hub.

4.34 **substrate :** A transparent layer of the disk, provided for mechanical support of the recording layer, through which the optical beam accesses the recording layer.

4.35 **write-inhibit hole :** A hole in the case which, when detected by the drive to be open, inhibits both write and erase operations.

Copyright International Organization for Standardization
Provided by IHS under license with ISO
No reproduction or networking permitted without license from IHS
Not for Resale

5 Conventions and notations

5.1 Representation of numbers

- A measured value is rounded off to the least significant digit of the corresponding specified value. Thus, a specified value of 1,26 with a positive tolerance of + 0,01, and a negative tolerance of -0,02 allows a range of measured values from 1,235 to 1,275.
- Letters and digits in parentheses represent numbers in hexadecimal notation.
- The setting of a bit is denoted by ZERO or ONE.
- Numbers in binary notation and bit combinations are represented by strings of ZEROs and ONEs.
- In each field the information is recorded so that the most significant byte (byte 0) is recorded first. Within each byte the least significant bit is numbered bit 0, the most significant bit (i.e, bit 7 in an 8-bit byte) is recorded first. This order of recording applies also to the data input of the error-correcting codes, to the cyclic redundancy code, and to their output.
- Bit combinations are shown with the most significant bit to the left.
- Negative values are expressed in TWO's complement notation.
- Unless otherwise stated, all track numbers refer to logical tracks.

5.2 Names

The name of entities, e.g. specific tracks, fields, etc., is shown with a capital initial.

6 List of acronyms

ALPC	Auto Laser Power Control
AM	Address Mark
CRC	Cyclic Redundancy Code
DDS	Disk Definition Structure
DMA	Defect Management Area
ECC	Error Correction Code
ID	Identifier
ODC	Optical Disk Cartridge
ODF	Offset Detection Flag
O-ROM	Optical Read Only Memory
PA	Postamble
PDL	Primary Defect List
PEP	Phase-Encoded Part of the Control Tracks
P-ROM	Partial Read Only Memory
RLL(2,7)	Run Length Limited (code)
R-S LDC	Reed-Solomon Long Distance Code
R/W	Rewritable
SCSI	Small Computer System Interface
SDL	Secondary Defect List
SFP	Standard Formatted Part of the Control Tracks
SM	Sector Mark
VFO	Variable Frequency Oscillator
WO	Write Once
ZCAV	Zoned Constant Angular Velocity

7 General description of the optical disk cartridge

The optical disk cartridge which is the subject of this International Standard consists of a case containing an optical disk. An optical beam is used to write data to, or to read data from, or to erase data from, the disk.

Copyright International Organization for Standardization
Provided by IHS under license with ISO
No reproduction or networking permitted without license from IHS
Not for Resale

The case is a protective enclosure for the disk. It has access windows covered by a shutter. The windows are automatically uncovered by the drive when the cartridge is inserted into it.

The disk is intended for use in a drive with optical access from one side only. To gain access to the second side of a disk, the cartridge has to be reversed before insertion into the drive.

A disk consists of two sides of the same Type, assembled together with the recording layers on the inside. Part of the disk or the entire disk may contain read-only data in the form of pits embossed by the manufacturer. This data can be read using the diffraction of the optical beam by the embossed pits.

The entire disk may be of Type WO.

8 General requirements

8.1 Environments

8.1.1 Testing environment

The test environment is the environment where the air immediately surrounding the optical disk cartridge shall have the following properties:

temperature	:23 °C ± 2 °C
relative humidity (RH)	:45 % to 55 %
atmospheric pressure	:60 kPa to 106 kPa
air cleanliness	:Class 100 000 (see annex A)

No condensation on or in the optical disk shall occur. Before testing, the optical disk cartridge shall be conditioned in this environment for 48 h minimum. It is recommended that, before testing, the entrance surface of the optical disk be cleaned according to the instructions of the manufacturer of the disk.

Unless otherwise stated all test and measurements shall be made in this testing environment.

8.1.2 Operating environment

This International Standard requires that an optical disk cartridge which meets all requirements of this International Standard in the specified test environment provide data interchange over the specified ranges of environmental parameters in the operating environment.

The operating environment is the environment where the air immediately surrounding the optical disk cartridge shall have the following properties:

temperature	:5 °C to 55 °C
relative humidity	:3 % to 85 %
absolute humidity	:1 g/m^3 to 30 g/m^3
atmospheric pressure	:60 kPa to 106 kPa
temperature gradient	:10 °C /h max.
relative humidity gradient	:10 % /h max.
air cleanliness	:Office environment (see annex G)
magnetic field strength at the recording layer for any condition under which a beam is in focus	:32 000 A/m max.
magnetic field strength at the recording layer during any other condition	:48 000 A/m max.

Copyright International Organization for Standardization
Provided by IHS under license with ISO
No reproduction or networking permitted without license from IHS
Not for Resale

No condensation on or in the ODC shall occur. If an ODC has been exposed to conditions outside those specified in this clause, it shall be acclimatized in an allowed operating environment for at least 2 h before use. (See also annex H.)

8.1.3 Storage environment

The optical disk cartridge without any protective enclosure shall not be stored in an environment outside the range allowed for storage. The storage environment, defined as the environment where the air immediately surrounds the optical disk cartridge, shall have the following properties:

temperature	:-10 °C to 55 °C
relative humidity	:3 % to 90 %
absolute humidity	:1 g/m^3 to 30 g/m^3
atmospheric pressure	:60 kPa to 106 kPa
temperature gradient	:15 °C /h max.
relative humidity gradient	:10 % /h max.
air cleanliness	:Office environment (see annex G)
magnetic field	:48 000 A/m max.

No condensation on or in the ODC shall be allowed to occur.

8.1.4 Transportation

This International Standard does not specify requirements for transportation; guidance is given in annex J.

8.2 Temperature shock

The optical disk cartridge shall withstand a temperature shock of up to 20 °C when inserted into, or removed from, the drive.

8.3 Safety requirements

The cartridge shall satisfy the safety requirements of IEC 950, when used in the intended manner or in any foreseeable use in an information processing system.

8.4 Flammability

The cartridge and its components shall be made from materials that comply with the flammability class for HB materials, or, as specified in IEC 950.

9 Reference Drive

The Reference Drive is a drive several critical components of which have well defined properties and which is used to test write, read and erase parameters of the disk for conformance to this International Standard. The critical components vary from test to test. This clause gives an outline of all components; components critical for tests in specific clauses only are specified in these clauses.

9.1 Optical system

The basic set-up of the optical system of the Reference Drive for measuring the write, read, and erase parameters is shown in figure 1. Different components and locations of components are permitted, providing that the performance remains the same as that of the set-up in figure 1. The optical system shall be such that the detected light reflected from the entrance surface of the disk is minimized so as not to influence the accuracy of measurement.

Copyright International Organization for Standardization
Provided by IHS under license with ISO
No reproduction or networking permitted without license from IHS
Not for Resale

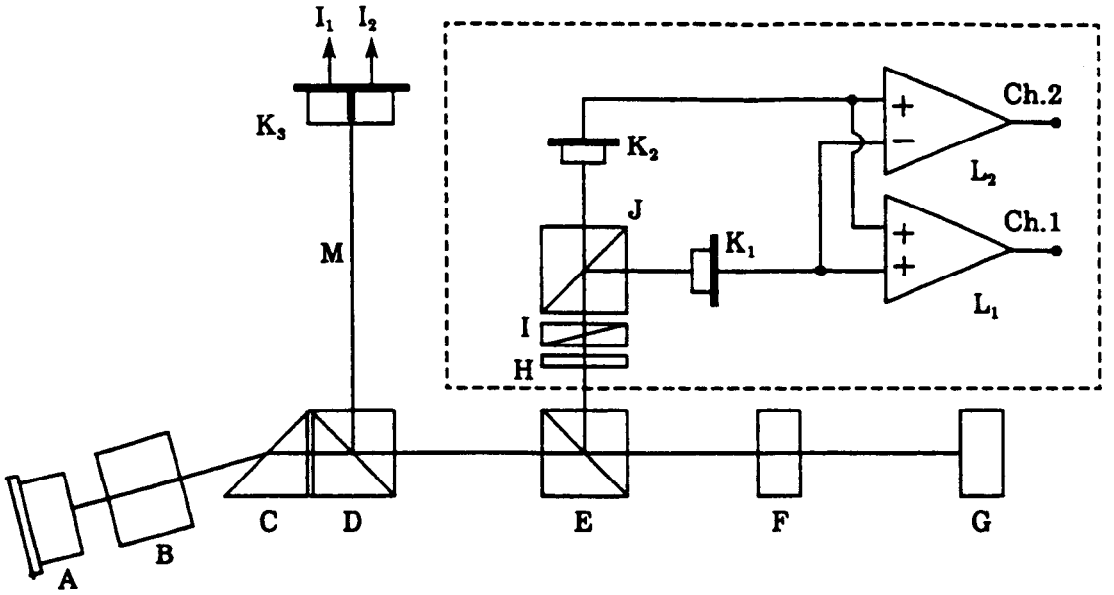

A	Laser diode	G	Optical disk
B	Collimator lens	H	Optical half-wave plate
C	Optical shaping prism	I	Phase retarder
Ch.1	Channel 1	J	Polarizing beam splitter
Ch.2	Channel 2	K_1, K_2	Photodiode for Channels 1 and 2
D	Beam splitter	K_3	Split photodiode
E	Polarizing beam splitter	L_1, L_2	d.c.-coupled amplifier
F	Objective lens	M	Tracking channel

Figure 1 - Optical system of the Reference Drive

In the absence of polarization changes in the disk, the polarizing beamsplitter J shall be aligned to make the signal of detector K_1 equal to that of detector K_2. The direction of polarization in this case is called the neutral direction. The phase retarder I shall be adjusted such that the optical system does not show more than $2{,}5^{\circ}$ phase retardation between the neutral polarization and the polarization perpendicular to it. This position of the retarder is called the neutral position.

The phase retarder can be used for the measurement of the narrow-band signal-to-noise ratio (see 15.3.5).

The beam splitter J shall have a p-s intensity reflectance ratio of at least 100.

The intensity reflectance R_p of the beam splitter E from F to H for the neutral polarization direction shall be nominally 0,30. The reflectance R_s for the polarization perpendicular to the neutral direction shall be nominally 0,95. The actual value of R_s shall not be smaller than 0,90.

The imbalance of the magneto-optical signal is specified for a beam splitter with nominal reflectances. If the measurement is made on a drive with reflectances R_p' and R_s' for beam splitter E, then the measured imbalance shall be multiplied by

$$\sqrt{\frac{R_s R_p'}{R_p R_s'}}$$

to make it correspond to the nominal beam splitter E.

Copyright International Organization for Standardization
Provided by IHS under license with ISO
No reproduction or networking permitted without license from IHS
Not for Resale

The output of Channel 1 is the sum of the currents through photodiodes K_1 and K_2, and is used for reading embossed marks. The output of Channel 2 is the difference between the photodiode currents, and is used for reading user-written marks with the magneto-optical effect.

9.2 Optical beam

The focused optical beam used for writing, reading and erasing data shall have the following properties:

a)	Wavelength (λ) :	$780\ \text{nm}\ ^{+15}_{-10}\ \text{nm}$
b)	Wavelength (λ) divided by the numerical aperture (NA) of the objective lens:	$\lambda/\text{NA} = 1{,}423\ \mu\text{m} \pm 0{,}023\ \mu\text{m}$
c).	Filling *D/W* of the aperture of the objective lens	1,0 max.
d)	Variance of the wave front of the optical beam at the recording layer:	$\lambda^2/180$ max.
e)	Extinction ratio:	0,01 max.

f) The optical power and pulse for writing, reading, erasing, and the magnetic field shall be as specified in 15.1.3, 15.1.4, and 15.1.5.

D is the diameter of the lens aperture and W is the beam diameter of the Gaussian beam where the intensity is $1/e^2$ of the maximum intensity.

The extinction ratio is the ratio of the minimum power observed behind a linear polarizer in the optical beam, which is rotated over at least 180°.

9.3 Read channels

Two read channels shall be provided to generate signals from the marks in the recording layer. Channel 1 shall be used for reading the embossed marks, using the diffraction of the optical beam by the marks. Channel 2 shall be used for reading the user-written marks, using the rotation of the polarization of the optical beam due to the magneto-optical effect of the marks. The read amplifiers after the photo-detectors in Channel 1 and Channel 2 shall have a flat response within ± 1 dB from 100 kHz to 34 MHz.

9.4 Tracking

The tracking channel of the drive provides the tracking error signals to control the servos for the axial and radial tracking of the optical beam. The method of generating the axial tracking error is not specified for the Reference Drive. The radial tracking error is generated by a split photo-diode detector in the tracking channel. The division of the diode runs parallel to the image of the tracks on the diode.

The requirements for the accuracy with which the focus of the optical beam must follow the tracks are specified in 15.1.2.3.

9.5 Rotation of the disk

The spindle shall position the disk as specified in 13.6. It shall rotate the disk at 30,0 Hz ± 0,3 Hz. The direction of rotation shall be counter-clockwise when viewed from the objective lens.

Copyright International Organization for Standardization
Provided by IHS under license with ISO
No reproduction or networking permitted without license from IHS
Not for Resale

Section 2 - Mechanical and physical characteristics

10 Dimensions and mechanical characteristics of the case

10.1 General

The case shall be a rigid, protective enclosure of rectangular shape and include a shutter which uncovers access windows upon insertion into the drive, and automatically covers them upon removal from the drive. The case shall have means for positioning and identifying the cartridge, and write-inhibit holes.

The dimensions of the inside of the case are not specified in this International Standard, but are determined by the movement of the disk inside the case allowed by 13.5 and 13.6.

10.2 Case drawings

The case is represented schematically by the following drawings; for information purposes, third angle projection is used.

- Figure 2 shows the hub dimensions.
- Figure 3 shows a composite drawing of Side A of the case in isometric form, with the major features identified from Side A.
- Figure 4 shows the envelope of the case with respect to a location hole at the intersection of the X and Y axes and reference plane P.
- Figure 5 a) shows the surfaces S_1, S_2, S_3 and S_4 which establish the reference plane P.
- Figure 5 b) shows the details of surface S_3.
- Figure 6 shows the details of the insertion slot and detent.
- Figure 7 shows the gripper slots, used for automatic handling.
- Figure 8 shows the write-inhibit holes.
- Figure 9 shows the media ID sensor holes.
- Figure 10 shows the shutter sensor notch.
- Figure 11 shows the head and motor window.
- Figure 12 shows the shutter opening features.
- Figure 13 shows the capture cylinder.
- Figure 14 shows the user label areas.

10.3 Sides, reference axes and reference planes

10.3.1 Relationship of Sides A and B

The features essential for physical interchangeability are represented in figure 3. When Side A of the cartridge faces upwards, Side A of the disk faces downwards. Sides A and B of the case are identical as far as the features given here are concerned. The description is given for one side only. References to Sides A and B can be changed to B or A respectively.

Only the shutter and the slot for the shutter opener, described in 10.15 and 10.16 are not identical for both sides of the case.

10.3.2 Reference axes and case reference planes

There is a reference plane P for each side of the case. Each reference plane P contains two orthogonal axes, X and Y, to which the dimensions of the case are referred. The intersection of the X and Y axes defines the centre of the location hole. The X axis extends through the centre of the alignment hole.

10.4 Materials

The case shall be constructed from any suitable materials such that it meets the requirements of this International Standard.

10.5 Mass

The mass of the case without the optical disk shall not exceed 150 g.

Copyright International Organization for Standardization
Provided by IHS under license with ISO
No reproduction or networking permitted without license from IHS
Not for Resale

10.6 Overall dimensions (see figure 4)

The total length of the case shall be

$L_1 = 153{,}0 \text{ mm} \pm 0{,}4 \text{ mm}$

The distance from the top of the case to the reference axis X shall be

$L_2 = 127{,}0 \text{ mm} \pm 0{,}3 \text{ mm}$

The distance from the bottom of the case to the reference axis X shall be

$L_3 = 26{,}0 \text{ mm} \pm 0{,}3 \text{ mm}$

The total width of the case shall be

$$L_4 = 135{,}0 \text{ mm} \begin{matrix} +0{,}0 \\ -0{,}6 \end{matrix} \text{ mm}$$

The distance from the left-hand side of the cartridge to the reference axis Y shall be

$$L_5 = 128{,}5 \text{ mm} \begin{matrix} +0{,}0 \\ -0{,}5 \end{matrix} \text{ mm}$$

The distance from the right-hand side of the cartridge to the reference axis Y shall be

$L_6 = 6{,}5 \text{ mm} \pm 0{,}2 \text{ mm}$

The width shall be reduced on the top by the radius

$R_1 = L_4$

originating from a point defined by L_5 and

$L_7 = 101{,}0 \text{ mm} \pm 0{,}3 \text{ mm}$

The two corners of the top shall be rounded with a radius

$R_2 = 1{,}5 \text{ mm} \pm 0{,}5 \text{ mm}$

and the two corners at the bottom with a radius

$R_3 = 3{,}0 \text{ mm} \pm 1{,}0 \text{ mm}$

The thickness of the case shall be

$L_8 = 11{,}00 \text{ mm} \pm 0{,}30 \text{ mm}$

The eight long edges of the case shall be rounded with a radius

$R_4 = 1{,}0 \text{ mm max.}$

10.7 Location hole (see figure 4)

The centre of the location hole shall coincide with the intersection of the reference axes X and Y. It shall have a square form with a side length of

$$L_9 = 4{,}10 \text{ mm} \begin{matrix} +0{,}00 \\ -0{,}06 \end{matrix} \text{ mm}$$

held to a depth of

$L_{10} = 1{,}5 \text{ mm}$ (i.e. typical wall thickness)

after which a cavity extends through to the alignment hole on the opposite side of the case.

The lead-in edges shall be rounded with a radius

$R_5 = 0{,}5 \text{ mm max.}$

Copyright International Organization for Standardization
Provided by IHS under license with ISO
No reproduction or networking permitted without license from IHS
Not for Resale

10.8 Alignment hole (see figure 4)

The centre of the alignment hole shall lie on reference axis X at a distance of

$$L_{11} = 122{,}0 \text{ mm} \pm 0{,}2 \text{ mm}$$

from the reference axis Y.

The dimensions of the hole shall be

$$L_{12} = 4{,}10 \text{ mm} \begin{matrix} +0{,}00 \\ -0{,}06 \end{matrix} \text{ mm}$$

and

$$L_{13} = 5{,}0 \text{ mm} \begin{matrix} +0{,}2 \\ -0{,}0 \end{matrix} \text{ mm}$$

held to a depth of L_{10}, after which a cavity extends through to the location hole on the opposite side of the case.

The lead-in edges shall be rounded with radius R_5.

10.9 Surfaces on reference plane P (see figure 5a) and 5b)

The reference plane P for a side of the case shall contain four surfaces (S_1, S_2, S_3 and S_4) on that side of the case, specified as follows:

– Two circular surfaces S_1 and S_2.

Surface S_1 shall be a circular area centred around the square location hole and have a diameter of

$$D_1 = 9{,}0 \text{ mm min.}$$

Surface S_2 shall be a circular area centred around the rectangular alignment hole and have a diameter of

$$D_2 = 9{,}0 \text{ mm min.}$$

– Two elongated surfaces S_3 and S_4, that follow the contour of the cartridge and shutter edges.

Surfaces S_3 and S_4 are shaped symmetrically.

Surface S_3 shall be defined by two circular sections with radii

$$R_6 = 1{,}5 \text{ mm} \pm 0{,}1 \text{ mm}$$

with an origin given by

$$L_{14} = 4{,}0 \text{ mm} \pm 0{,}1 \text{ mm}$$

$$L_{15} = 86{,}0 \text{ mm} \pm 0{,}3 \text{ mm}$$

and

$$R_7 = 1{,}5 \text{ mm} \pm 0{,}1 \text{ mm}$$

with an origin given by

$$L_{16} = 1{,}9 \text{ mm} \pm 0{,}1 \text{ mm}$$

$$L_{17} = 124{,}5 \text{ mm} \pm 0{,}3 \text{ mm}$$

The arc with radius R_7 shall continue on the right hand side with radius

$$R_8 = 134{,}0 \text{ mm} \begin{matrix} +0{,}2 \\ -0{,}7 \end{matrix} \text{ mm}$$

which is a dimension resulting from $L_5 + L_{14} + R_6$ with an origin given by L_5 and L_7. A straight, vertical line shall smoothly join the arc of R_6 to the arc of R_8.

Copyright International Organization for Standardization
Provided by IHS under license with ISO
No reproduction or networking permitted without license from IHS
Not for Resale

The left-hand side of S_3 shall be bounded by radius

$R_9 = 4{,}5$ mm ± 0,3 mm

which is a dimension resulting from $L_{18} + L_{14} - R_6$ with an origin given by

$L_{18} = 2{,}0$ mm ± 0,1 mm

$L_{19} = 115{,}5$ mm ± 0,3 mm.

The left-hand side of the boundary shall be closed by two straight lines. The first one shall smoothly join the arc of R_6 to the arc of R_9. The second one shall run from the left and tangent of R_7 to its intersection with R_9. Along the left hand side of surface S_3 there shall be a zone to protect S_3 from being damaged by the shutter. In order to keep this zone at a minimum practical width

$R_{10} = 4{,}1$ mm max.

This radius originates from the same point as R_9.

10.10 Insertion slots and detent features (see figure 6)

The case shall have two symmetrical insertion slots with embedded detent features. The slots shall have a length of

$L_{20} = 26{,}0$ mm ± 0,3 mm

a width of

$L_{21} = 6{,}0\ ^{+\,0{,}3}_{-\,0{,}0}$ mm

and a depth of

$L_{22} = 3{,}0$ mm ± 0,1 mm

located

$L_{23} = 2{,}5$ mm ± 0,2 mm

from reference plane P.

The slots shall have a lead-in chamfer defined by

$L_{24} = 0{,}5$ mm max.

$L_{25} = 5{,}0$ mm max.

The detent notch shall be a semi-circle of radius

$R_{11} = 3{,}0$ mm ± 0,2 mm

with the origin defined by

$L_{26} = 13{,}0$ mm ± 0,3 mm

$L_{27} = 2{,}0$ mm ± 0,1 mm

$L_{73} = 114{,}0$ mm ± 0,3 mm

The dimensions L_2, L_{26} and L_{73} are interrelated, their values shall be such that they are all three within specification.

10.11 Gripper slots (see figure 7)

The case shall have two symmetrical gripper slots with a depth of

$L_{28} = 5{,}0$ mm ± 0,3 mm

from the edge of the case and a width of

$L_{29} = 6{,}0$ mm ± 0,3 mm

The upper edge of a slot shall be

Copyright International Organization for Standardization
Provided by IHS under license with ISO
No reproduction or networking permitted without license from IHS
Not for Resale

L_{30} = 12,0 mm ± 0,3 mm

above the bottom of the case.

10.12 Write-inhibit holes (see figure 8)

Sides A and B shall each have a write-inhibit hole. The case shall include a device for opening and closing each hole. The hole at the left-hand side of Side A of the case, is the write-inhibit hole for Side A of the disk. The protected side of the disk shall be made clear by inscriptions on the case or by the fact that the device for Side A of the disk can only be operated from Side A of the case.

When writing and erasing on Side A of the disk are not allowed, the write-inhibit hole shall be open all through the case. It shall have a diameter

D_3 = 4,0 mm min.

Its centre shall be specified by

L_{31} = 8,0 mm ± 0,2 mm

L_{32} = 111,0 mm ± 0,3 mm

on Side A of the case.

When writing and erasing are allowed on Side A of the disk, the write-inhibit hole shall be closed on Side A of the case, at a depth of typically L_{10}, i.e. the wall thickness of the case. In this state, the opposite side of the same hole, at Side B of the case, shall be closed and not recessed from the reference plane P of Side B of the case by more than

L_{33} = 0,5 mm

The opposite side of the write-inhibit hole for protecting Side B of the disk shall have a diameter D_3. Its centre shall be specified by L_{31} and

L_{34} = 11,0 mm ± 0,2 mm

on Side A of the case.

10.13 Media sensor holes (see figure 9)

There shall be two sets of four media sensor holes. The set of holes at the lower left hand corner of Side A of the case pertains to Side A of the disk. The holes shall extend through the case, and have a diameter of

$D_4 = 4{,}0\ \text{mm}\ ^{+0,3}_{-0,0}\ \text{mm}$

the positions of their centres shall be specified by L_{32}, L_{34} and

L_{35} = 19,5 mm ± 0,2 mm

L_{36} = 17,0 mm ± 0,2 mm

L_{37} = 23,0 mm ± 0,2 mm

L_{38} = 29,0 mm ± 0,2 mm

L_{39} = 93,0 mm ± 0,3 mm

L_{40} = 99,0 mm ± 0,3 mm

L_{41} = 105,0 mm ± 0,3 mm

A hole is deemed to be open when there is no obstruction in this hole over a diameter D_4 all through the case.

A hole for Side A of the disk is deemed to be closed, when the hole is closed on both Side A and Side B of the case. The closure shall be recessed from reference plane P by

L_{42} = 0,1 mm max.

Copyright International Organization for Standardization
Provided by IHS under license with ISO
No reproduction or networking permitted without license from IHS
Not for Resale

The holes are numbered consecutively from 1 to 4. Hole No. 1 is the hole closest to the left-hand edge of the case. The optical disk cartridge according to this International Standard uses only hole No. 1. The other three holes shall be in the closed state.

The function of hole No.1 is to indicate whether or not the disk is of high reflectivity type. When the hole is open, the disk is of high reflectivity and fully embossed. When hole No. 1 is closed, the disk is not of high reflectivity, thus the cartridge is either of Type R/W or Type P-ROM or Type WO.

10.14 Head and motor window (see figure 11)

The case shall have a window on each side to enable the optical head and the motor to access the disk. The dimensions are referenced to a centreline, located at a distance of

$L_{46} = 61{,}0 \text{ mm} \pm 0{,}2 \text{ mm}$

to the left of reference axis Y.

The width of the head access shall be

$L_{47} = 20{,}00 \text{ mm min.}$

$L_{48} = 20{,}00 \text{ mm min.}$

and its height shall extend from

$L_{49} = 118{,}2 \text{ mm min. to}$

$L_{50} = 57{,}0 \text{ mm max.}$

The four inside corners shall be rounded with a radius of

$R_{12} = 3{,}0 \text{ mm max.}$

The motor access window shall have a diameter of

$D_5 = 35{,}0 \text{ mm min.}$

and its centre shall be defined by L_{46} and

$L_{51} = 43{,}0 \text{ mm} \pm 0{,}2 \text{ mm}$

10.15 Shutter (see figure 12)

The case shall have a spring-loaded, unidirectional shutter with an optional latch, designed to completely cover the head and motor windows when closed. A shutter movement of 41,5 mm minimum shall be sufficient to ensure that the head and motor window is opened to the minimum size specified in 10.14. The shutter shall be free to slide in a recessed area of the case so as to ensure that the overall thickness shall not exceed L_8. The spring shall be sufficiently strong to close a free-sliding shutter, irrespective of the orientation of the cartridge.

The shutter opening force shall be 3 N max.

The right-hand side of the top of the shutter shall have a lead-in ramp with an angle.

$A_2 = 25° \text{ max.}$

The distance from the reference planes P to the nearest side of the ramp shall be

$L_{52} = 3{,}0 \text{ mm max.}$

10.16 Slot for shutter opener (see figure 12)

The shutter shall have only one slot in which the shutter opener of the drive can engage to open the shutter. The slot shall be dimensioned as follows:

When the shutter is closed, the vertical edge used to push the shutter open shall be located at a distance of

$L_{53} = 34{,}5 \text{ mm} \pm 0{,}5 \text{ mm}$

from reference axis Y on Side B of the case.

Copyright International Organization for Standardization
Provided by IHS under license with ISO
No reproduction or networking permitted without license from IHS
Not for Resale

The length of the slot shall be

$$L_{54} = 4{,}5 \text{ mm} \pm 0{,}1 \text{ mm}$$

and the angle of the lead-out ramp shall be

$$A_3 = 52{,}5° \pm 7{,}5°$$

The depth of the slot shall be

$$L_{55} = 3{,}5 \text{ mm} \pm 0{,}1 \text{ mm}$$

The width of the slot from the reference plane P of Side B of the case shall be

$$L_{56} = 6{,}0 \text{ mm} \begin{matrix} +0{,}5 \\ -0{,}0 \end{matrix} \text{ mm}$$

If a shutter latch is employed, the distance between the latch and reference plane P of Side B of the case shall be

$$L_{57} = 3{,}0 \text{ mm max.}$$

10.17 Shutter sensor notch (see figure 10)

The shutter sensor notch is used to ensure that the shutter is fully open after insertion of the optical disk cartridge into the drive. Therefore, the notch shall be exposed only when the shutter is fully open.

The dimensions shall be

$$L_{43} = 3{,}5 \text{ mm} \pm 0{,}2 \text{ mm}$$

$$L_{44} = 71{,}0 \text{ mm} \pm 0{,}3 \text{ mm and}$$

$$L_{45} = 9{,}0 \text{ mm} \begin{matrix} +0{,}0 \\ -2{,}0 \end{matrix} \text{ mm}$$

The notch shall have a lead-out ramp with an angle

$$A_1 = 45° \pm 2°$$

10.18 User label areas (see figure 14)

The case shall have the following minimum areas for user labels:

- on Side A and Side B: 35,0 mm x 65,0 mm
- on the bottom side: 6,0 mm x 98,0 mm

These areas shall be recessed by 0,2 mm min. Their positions are specified by the following dimensions and relations between dimensions (see figure 14).

L_{61}	= 4,5 mm min.
$L_{62} - L_{61}$	= 65,0 mm min.
$L_{64} - L_{63}$	= 35,0 mm min.
L_{65}	= 4,5 mm min.
$L_{66} - L_{65}$	= 65,0 mm min.
$L_{67} + L_{68}$	= 35,0 mm min.
$L_8 - L_{71} - L_{72}$	= 6,0 mm min.
$L_4 - L_{69} - L_{70}$	= 98,0 mm min.

Copyright International Organization for Standardization
Provided by IHS under license with ISO
No reproduction or networking permitted without license from IHS
Not for Resale

11 Dimensional and physical characteristics of the disk

11.1 Dimensions of the disk

11.1.1 Outer diameter

The outer diameter of the disk shall be 130,0 mm nominal. The tolerance is determined by the movement of the disk inside the case allowed by 13.5 and 13.6.

11.1.2 Thickness

The total thickness of the disk outside the hub area shall be 2,8 mm maximum. The total thickness of the disk is defined as the distance between the reference planes of each side of the disk.

11.1.3 Clamping zone (see figure 2)

The outer diameter of the zone shall be

$$D_6 = 35{,}0 \text{ mm min.}$$

The inner diameter of the zone shall be

$$D_7 = 27{,}0 \text{ mm max.}$$

11.1.4 Clearance zone

Within the zone defined by the outer diameter D_6 of the Clamping Zone and the inner diameter of the Reflective Zone (see 16.2.2) there shall be no projection from either disk reference plane in the direction of the optical system of more than 0,2 mm.

11.2 Mass

The mass of the disk shall not exceed 120 g.

11.3 Moment of inertia

The moment of inertia of the disk shall not exceed 0,22 $g \cdot m^2$.

11.4 Imbalance

The imbalance of the disk shall not exceed 0,01 g·m.

11.5 Axial deflection

The deviation of any point of the recording layer from its nominal position, in a direction normal to the disk reference plane, shall not exceed ± 0,30 mm for rotational frequencies of the disk up to 30 Hz. The deviation shall be measured by the optical system defined in 15.1.1 and 15.1.2.

The nominal position of the recording layer with respect to the disk reference plane is determined by the nominal thickness of the substrate and its index of refraction.

11.6 Axial acceleration

The maximum allowed axial error e_{max} (see annex K) shall not exceed ± 0,93 µm, measured using the Reference Servo for axial tracking of the recording layer. The rotational frequency of the disk shall be 30,0 Hz ± 0,3 Hz. The stationary part of the motor is assumed to be motionless (no external disturbances). The measurement shall be made using a servo with the transfer function

Copyright International Organization for Standardization
Provided by IHS under license with ISO
No reproduction or networking permitted without license from IHS
Not for Resale

$$H_s(i\omega) = \frac{1}{3}\left(\frac{\omega_0}{i\omega}\right)^2 \frac{1+\frac{3i\omega}{\omega_0}}{1+\frac{i\omega}{3\omega_0}}$$

where:

$\omega = 2\pi f$

$\omega_0 / 2\pi = 904\,\text{Hz}$

$i = \sqrt{-1}$

or any other servo with $|1+H|$ within 20 % of $|1+H_s|$ in the bandwidth of 30 Hz to 100 kHz. Thus, the disk shall not require an acceleration of more than 10 m/s^2 at low frequencies from the servo motor of the Reference Servo.

11.7 Dynamic radial runout

The difference between the maximum and the minimum distance of any track from the axis of rotation, measured along a fixed radial line over one revolution of the disk, shall not exceed 50 µm as measured by the optical system under conditions of a hub mounted on a perfect sized test fixture shaft, for rotational frequencies of the disk up to 30 Hz.

11.8 Radial acceleration

The maximum allowed radial error e_{max} (see annex K) shall not exceed ± 0,14 µm, measured using the Reference Servo for radial tracking of the tracks. The rotational frequency of the disk shall be 30,0 Hz ± 0,3 Hz. The stationary part of the motor is assumed to be motionless (no external disturbances). The measurement shall be made using a servo with the transfer function

$$H_s(i\omega) = \frac{1}{3}\left(\frac{\omega_0}{i\omega}\right)^2 \frac{1+\frac{3i\omega}{\omega_0}}{1+\frac{i\omega}{3\omega_0}}$$

where:

$\omega = 2\pi f$

$\omega_0 / 2\pi = 1\,276\,\text{Hz}$

$i = \sqrt{-1}$

or any other servo with $|1+H|$ within 20 % of $|1+H_s|$ in the bandwidth of 30 Hz to 100 kHz. Thus, the disk shall not require an acceleration of more than 3 m/s^2 at low frequencies from the servo motor of the Reference Servo.

11.9 Tilt

The tilt angle, defined as the angle which the normal to the entrance surface, averaged over a circular area of 1 mm diameter, makes with the normal to the disk reference plane, shall not exceed 4,5 mrad in the operating environment.

Copyright International Organization for Standardization
Provided by IHS under license with ISO
No reproduction or networking permitted without license from IHS
Not for Resale

12 Drop test

The optical disk cartridge shall withstand dropping on each surface and on each corner from a height of 760 mm onto a concrete floor covered with a vinyl layer 2 mm thick. The cartridge shall withstand all such impacts without any functional failure.

13 Interface between disk and drive

13.1 Clamping technique

Radial positioning of the optical disk shall be provided by the centring of the axle of the spindle in the centre hole of the hub.

The turntable of the drive spindle shall support the disk in the clamping zone, determining the axial position of the disk in the case.

A clamping force shall be provided by the attraction between magnets in the spindle and a magnetizable ring in the hub.

13.2 Dimensions of the hub (see figure 2)

13.2.1 Outer diameter of the hub

This diameter shall be

$$D_8 = 25{,}0 \text{ mm}^{+0{,}0}_{-0{,}2} \text{ mm}$$

13.2.2 Height of the hub

The height shall be

$$h_1 = 2{,}2 \text{ mm}^{+0{,}0}_{-0{,}2} \text{ mm}$$

13.2.3 Diameter of the centre hole

The diameter of the centre hole shall be

$$D_9 = 4{,}004 \text{ mm}^{+0{,}012}_{-0{,}000} \text{ mm}$$

13.2.4 Height of the top of the centre hole at diameter D_9

The height of the top of the centre hole at diameter D_9 measured above the disk reference plane, shall be

$$h_2 = 1{,}9 \text{ mm min.}$$

13.2.5 Centring length at diameter D_9

This length shall be

$$h_3 = 0{,}5 \text{ mm min.}$$

The hole shall have a diameter larger than or equal to D_9 between the centring length and the disk reference plane. The hole shall extend through the substrate.

13.2.6 Radius at diameter D_9

There shall be a radius at the rim of the hub with height

$$h_4 = 0{,}2 \text{ mm} \pm 0{,}1 \text{ mm}$$

At the two surfaces which it intersects, the radius shall be blended to prevent offsets or sharp ridges.

Copyright International Organization for Standardization
Provided by IHS under license with ISO
No reproduction or networking permitted without license from IHS
Not for Resale

13.2.7 Chamfer at diameter D_8

The height of the chamfer at the rim of the hub shall be

$$h_5 = 0{,}2 \text{ mm} \begin{matrix} +0{,}2 \\ -0{,}0 \end{matrix} \text{ mm}$$

The angle of the chamfer shall be 45°, or a corresponding full radius shall be used.

13.2.8 Outer diameter of the magnetizable ring

This diameter shall be

$$D_{10} = 19{,}0 \text{ mm min.}$$

13.2.9 Inner diameter of the magnetizable ring

This diameter shall be

$$D_{11} = 8{,}0 \text{ mm max.}$$

13.2.10 Thickness of the magnetizable material

This thickness shall be

$$h_6 = 0{,}5 \text{ mm min.}$$

13.2.11 Position of the top of the magnetizable ring relative to the disk reference plane

This position shall be

$$h_7 = 2{,}2 \text{ mm} \begin{matrix} +0{,}0 \\ -0{,}1 \end{matrix} \text{ mm}$$

13.3 Clamping method

When the cartridge is inserted into the drive, the shutter of the case is opened and the drive spindle engages the disk. The disk is held against the spindle by an axial clamping force, provided by the magnetizable material in the hub (see annex F) and the magnets in the spindle. The radial positioning of the disk is provided by the centring of the axis of the spindle in the centre hole of the hub. A cup-shaped turntable of the spindle shall support the disk in its Clamping Zone, determining the axial position of the disk in the case.

13.4 Clamping force

The clamping force exerted by the spindle shall be less than 14 N (see annex F).

The adsorbent force measured by the test device specified in annex F shall be in the range of 8,0 N to 12,0 N.

13.5 Capture cylinder for the hub (see figure 13)

The capture cylinder is defined as the volume in which the spindle can expect the centre of the hole of the hub to be at the maximum height of the hub, just prior to capture. The size of the cylinder limits the allowable play of the disk inside its cavity in the case. This cylinder is referred to perfectly located and perfectly sized alignment and location pins in the drive, and includes tolerances of dimensions of the case and the disk between the two pins mentioned and the centre of the hub. The bottom of the cylinder is parallel to the reference plane P, and shall be located at a distance of

$$L_{58} = 0{,}5 \text{ mm min.}$$

above the reference plane P of Side B of the case when Side A of the disk is to be used. The top of the cylinder shall be located at a distance of

Copyright International Organization for Standardization
Provided by IHS under license with ISO
No reproduction or networking permitted without license from IHS
Not for Resale

L_{59} = 4,3 mm max.

above the same reference plane. The diameter of the cylinder shall be

D_{12} = 3,0 mm max.

Its centre shall be defined by the nominal values of L_{46} and L_{51}.

13.6 Disk position in the operating condition (see figure 13)

When the disk is in the operating condition within the drive, the position of the active recording layer shall be

L_{60} = 5,35 mm ± 0,15 mm

above reference plane P of the side of the case that faces the optical system. Moreover, the torque to be exerted on the disk in order to maintain a rotational frequency of 30 Hz shall not exceed 0,01 N.m, when the axis of rotation is within a circle with a diameter of

D_{13} = 0,2 mm max.

and a centre given by the nominal values of L_{46} and L_{51}.

--`,,```,,,,````-`-`,,`,,`,`,,`---

Copyright International Organization for Standardization
Provided by IHS under license with ISO
No reproduction or networking permitted without license from IHS

Not for Resale

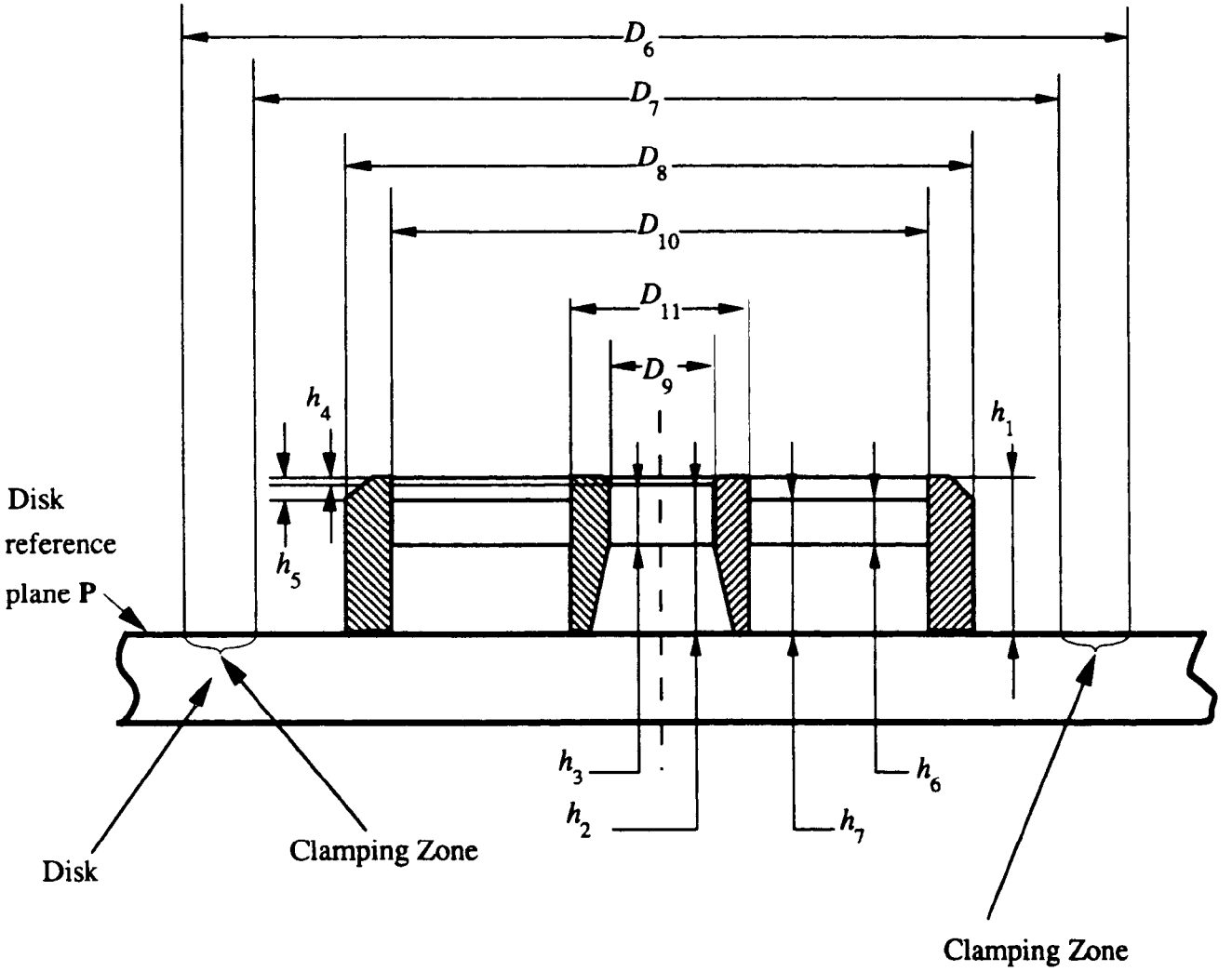

Figure 2 - Hub dimensions

Copyright International Organization for Standardization
Provided by IHS under license with ISO
No reproduction or networking permitted without license from IHS
Not for Resale

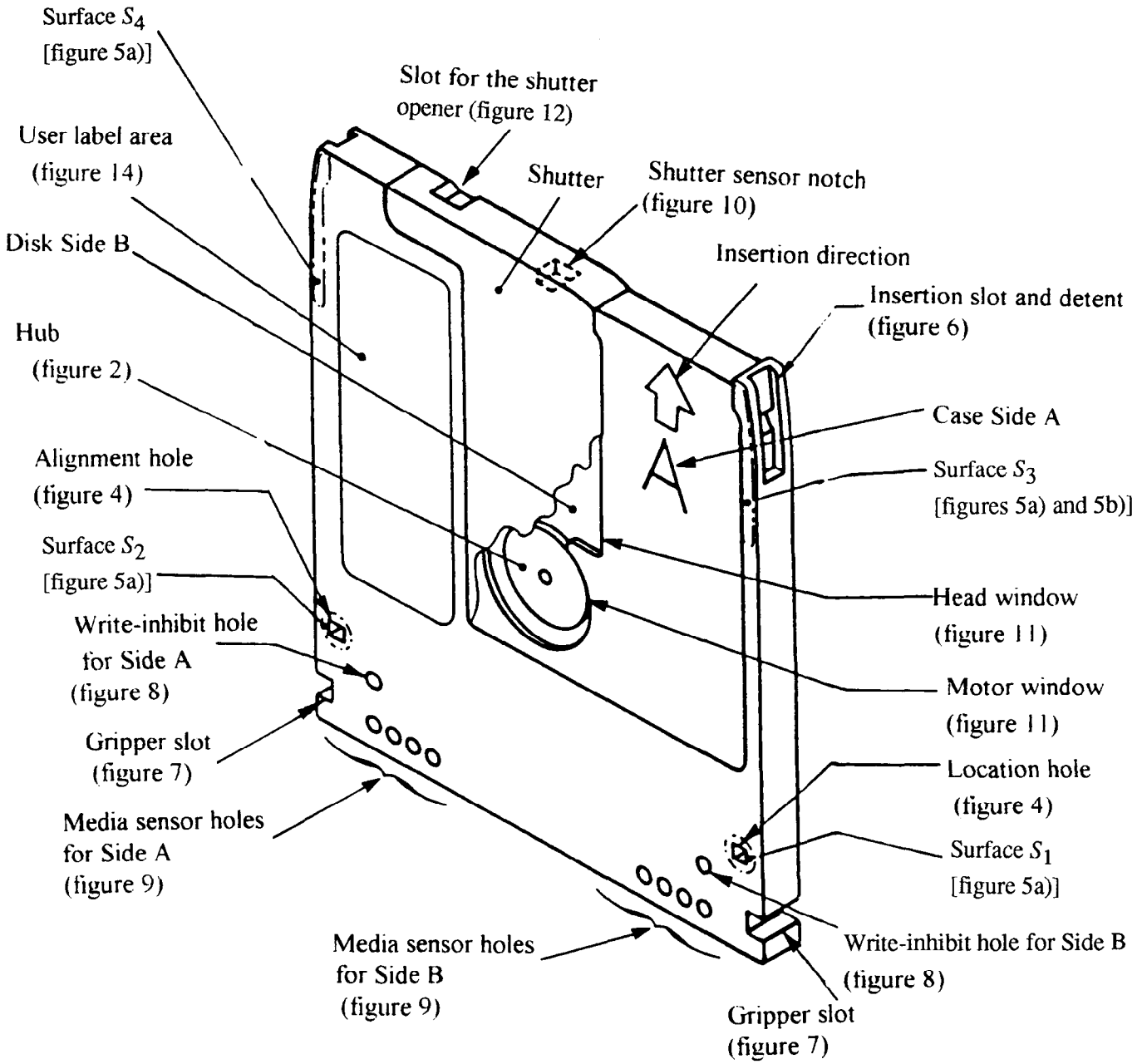

Figure 3 - Perspective view of the case

Copyright International Organization for Standardization
Provided by IHS under license with ISO
No reproduction or networking permitted without license from IHS
Not for Resale

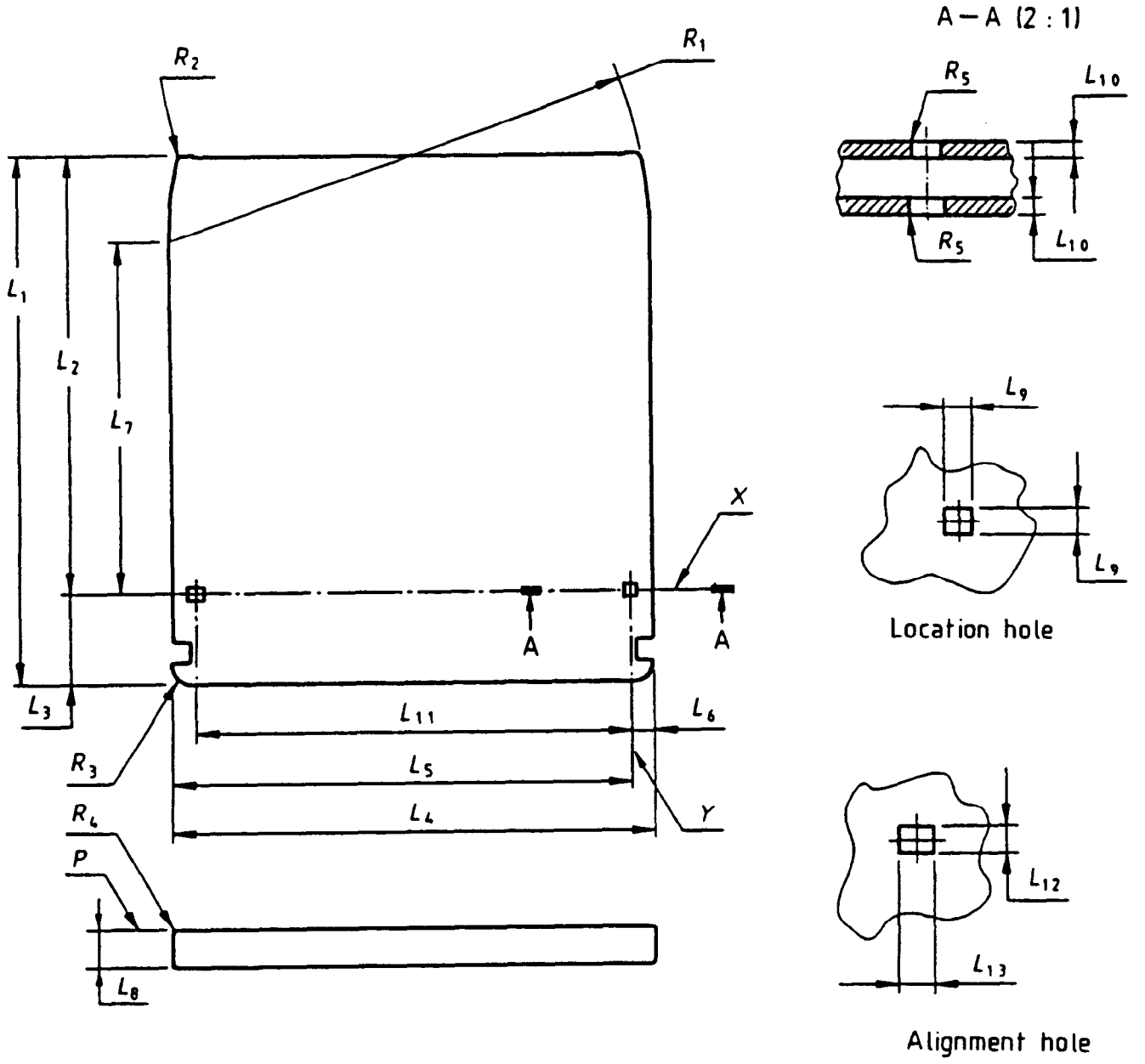

Figure 4 - Overall dimensions and reference axes

Copyright International Organization for Standardization
Provided by IHS under license with ISO
No reproduction or networking permitted without license from IHS
Not for Resale

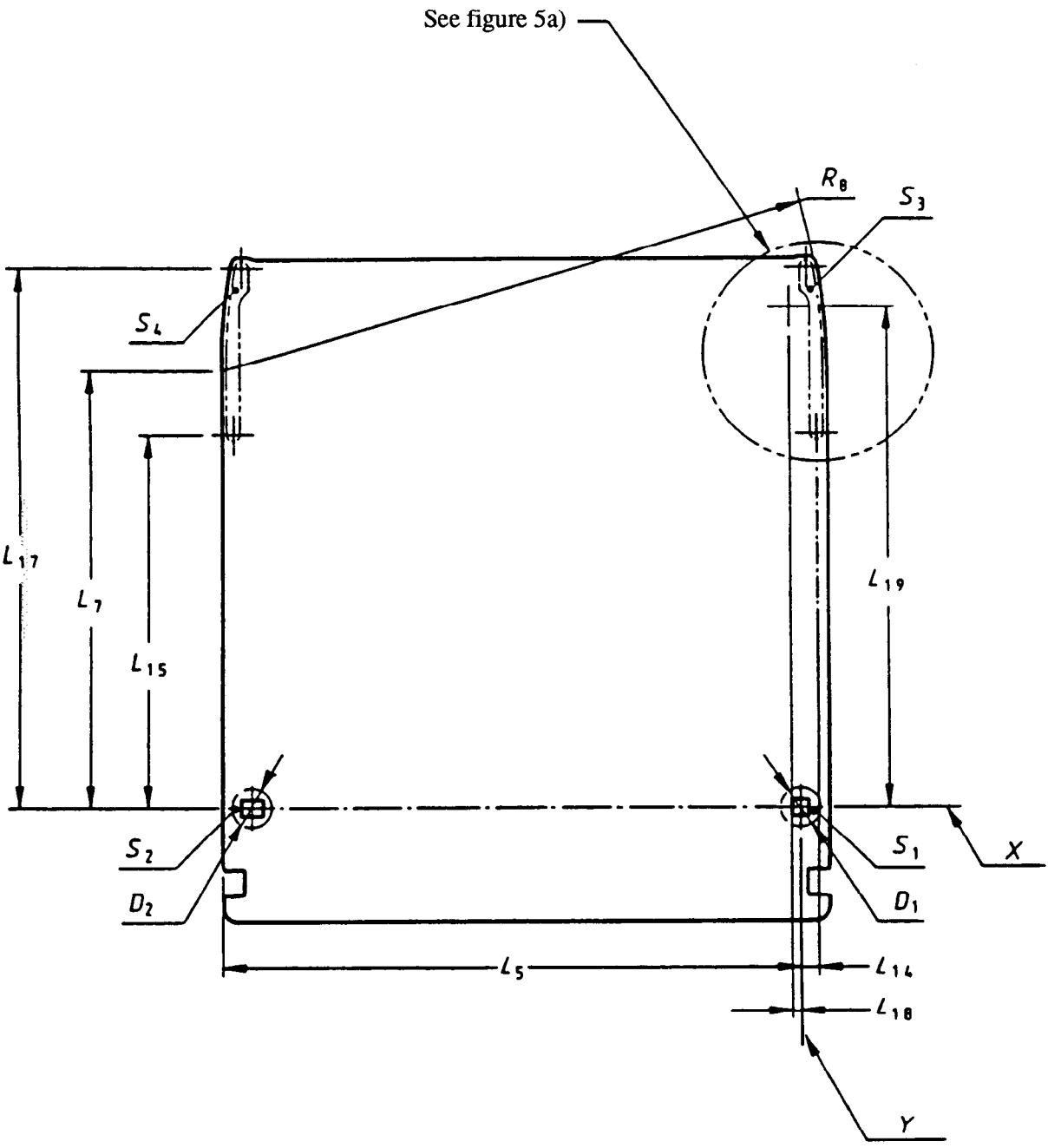

Figure 5a) - Surfaces S_1, S_2, S_3 and S_4 of the reference Plane P

Copyright International Organization for Standardization
Provided by IHS under license with ISO
No reproduction or networking permitted without license from IHS
Not for Resale

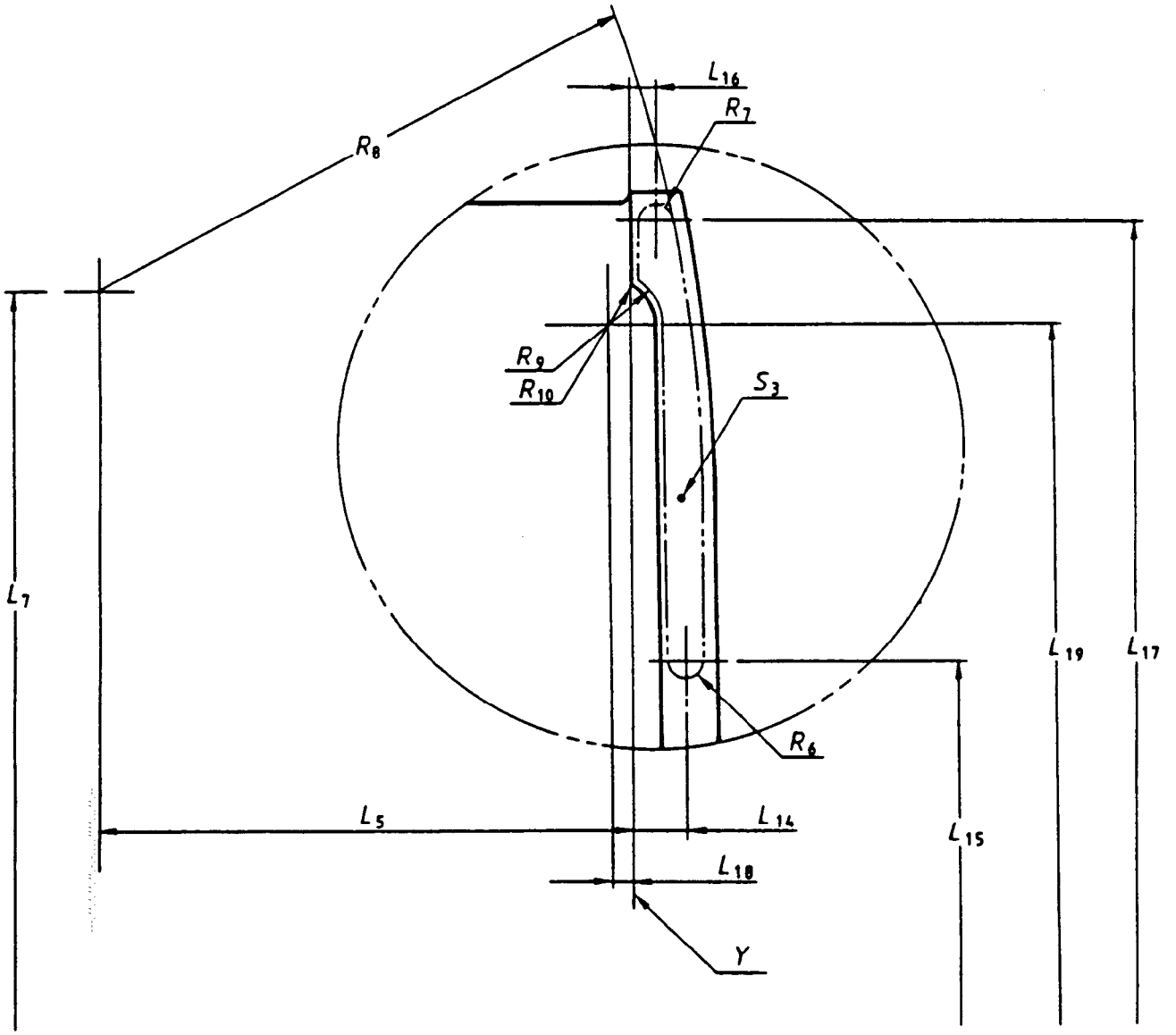

Figure 5b) - Detail of surface S_3

Copyright International Organization for Standardization
Provided by IHS under license with ISO
No reproduction or networking permitted without license from IHS
Not for Resale

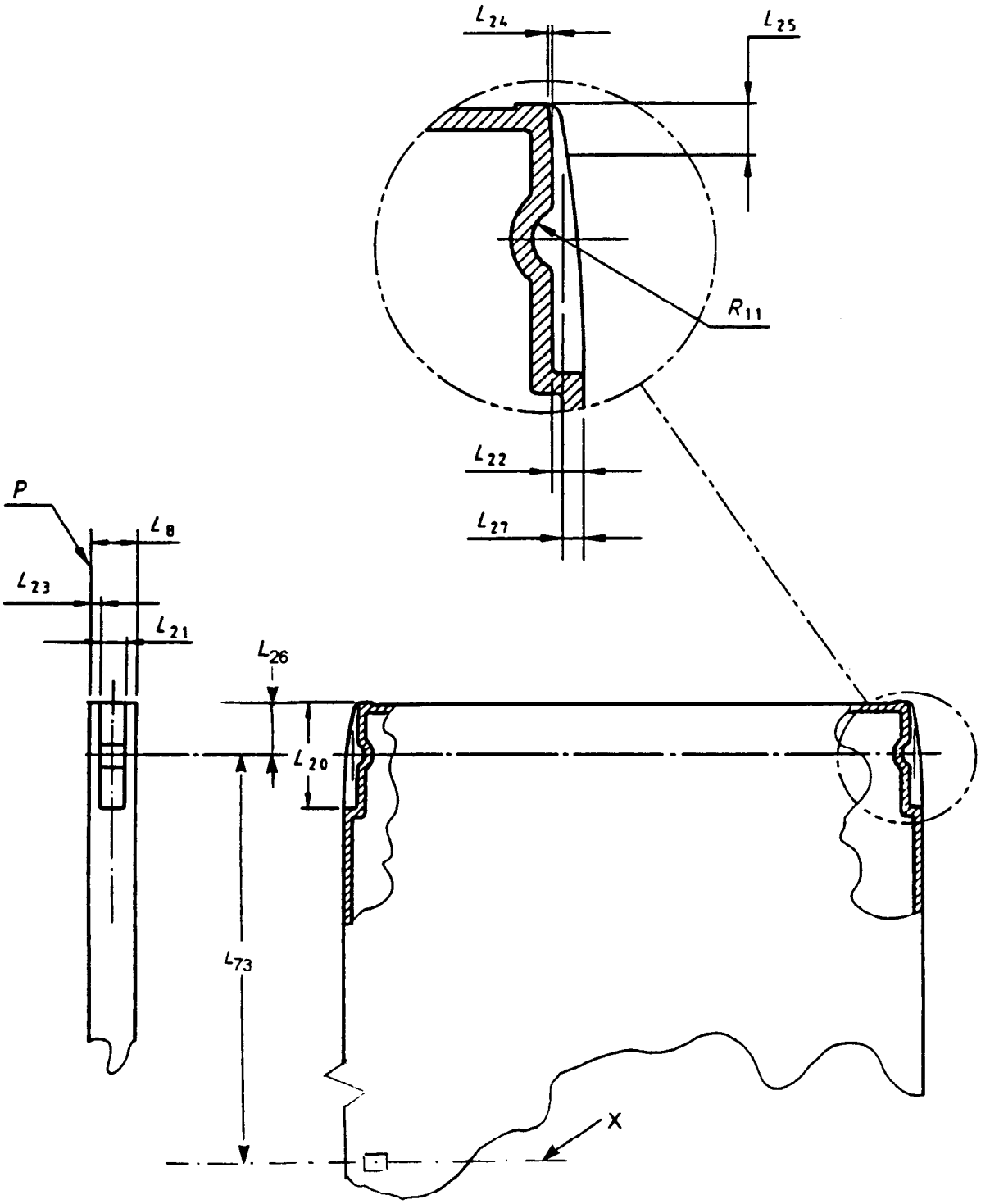

Figure 6 - Insertion slot and detent

Copyright International Organization for Standardization
Provided by IHS under license with ISO
No reproduction or networking permitted without license from IHS
Not for Resale

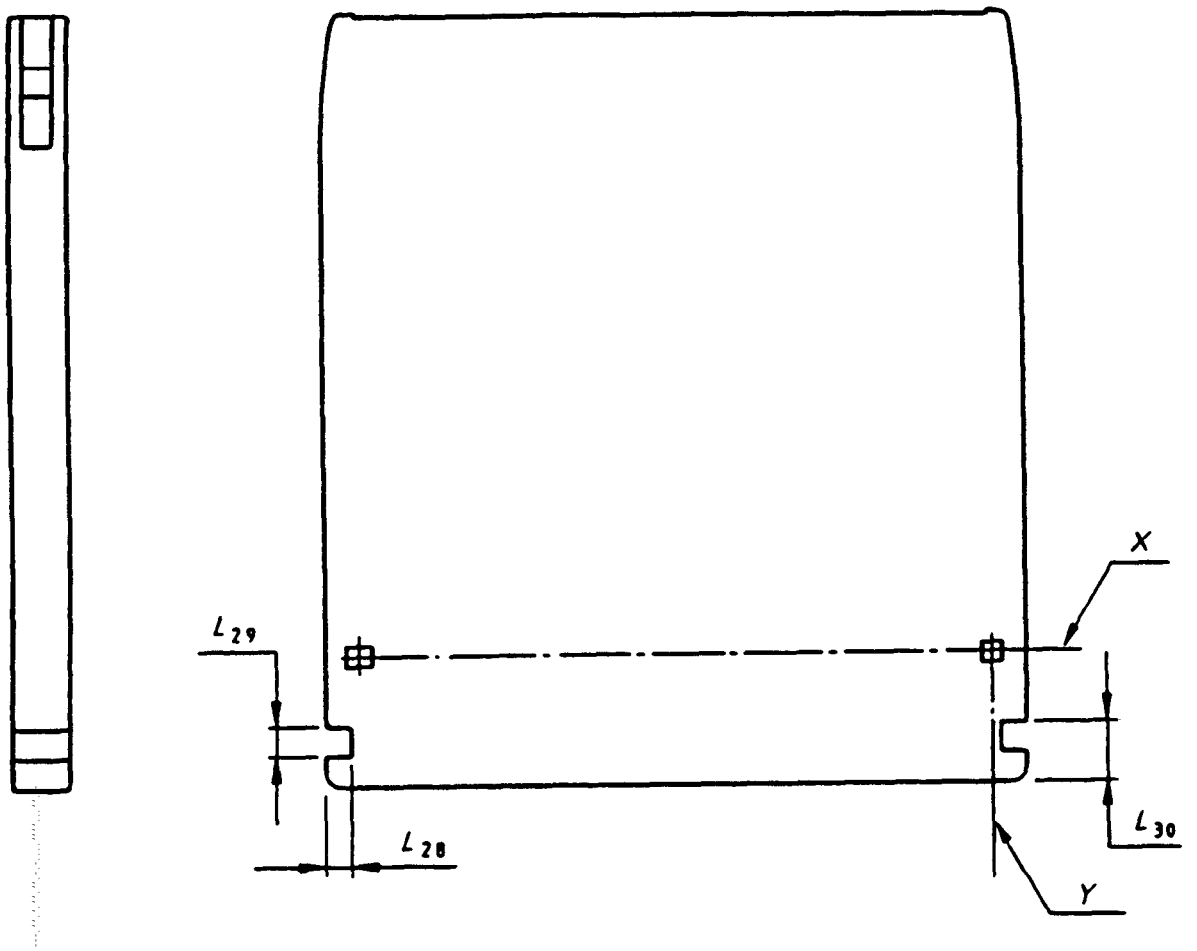

Figure 7 - Gripper slots

Copyright International Organization for Standardization
Provided by IHS under license with ISO
No reproduction or networking permitted without license from IHS
Not for Resale

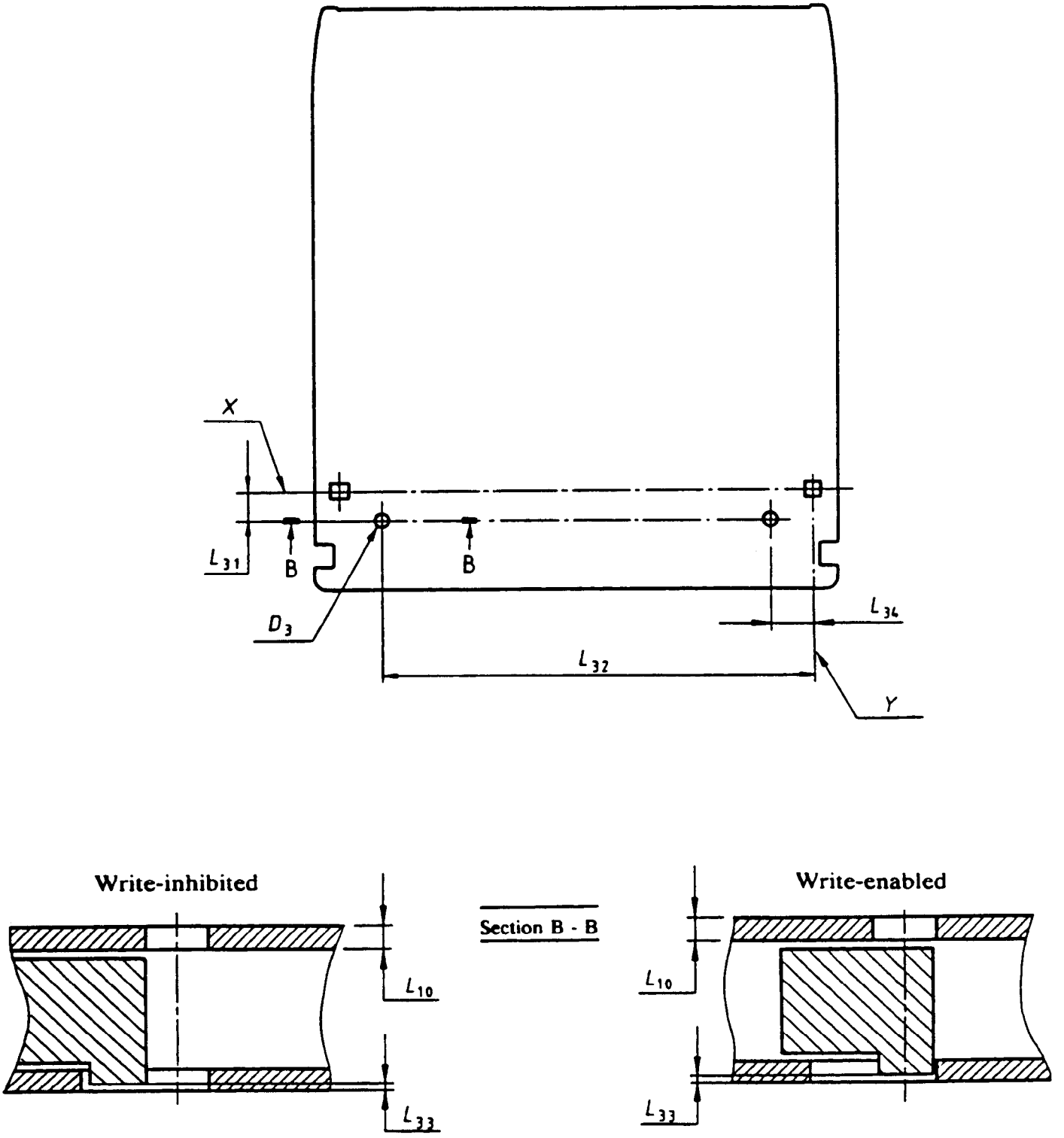

Figure 8 - Write-inhibit holes

Copyright International Organization for Standardization
Provided by IHS under license with ISO
No reproduction or networking permitted without license from IHS
Not for Resale

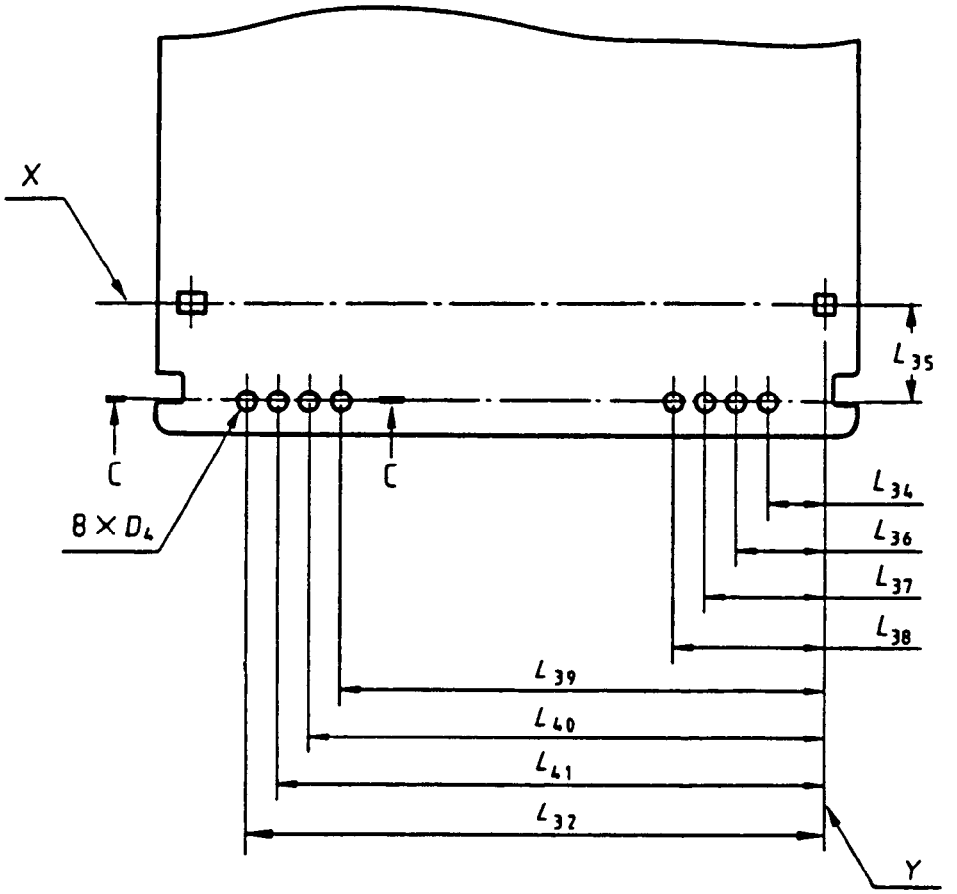

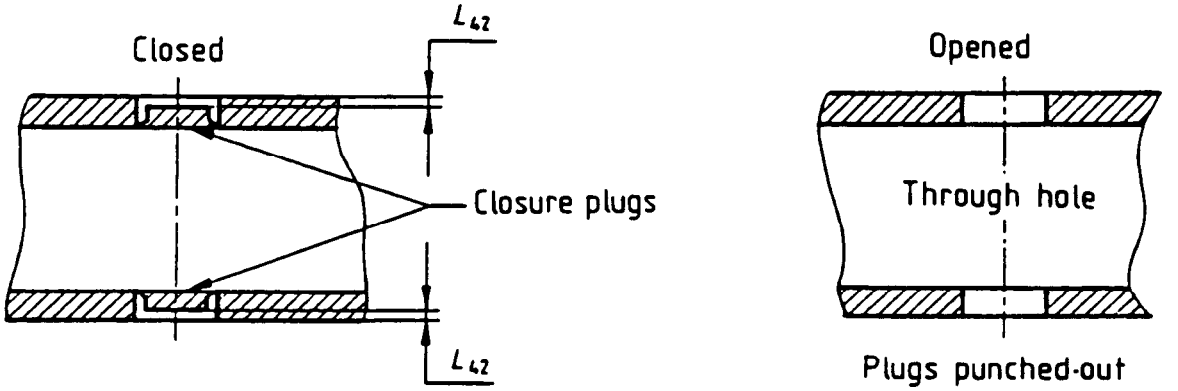

Typical sensor hole section C - C

Figure 9 - Media ID sensor holes

Copyright International Organization for Standardization
Provided by IHS under license with ISO
No reproduction or networking permitted without license from IHS
Not for Resale

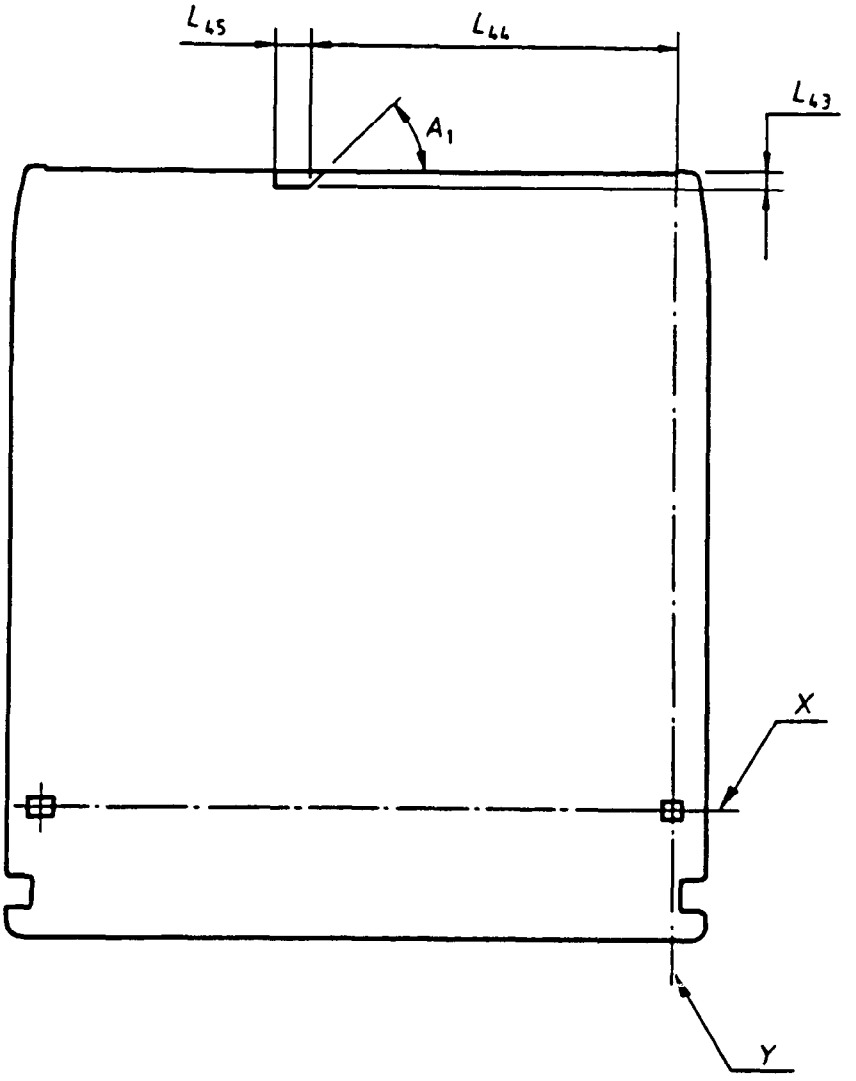

Figure 10 - Shutter sensor notch viewed from Slide A

Copyright International Organization for Standardization
Provided by IHS under license with ISO
No reproduction or networking permitted without license from IHS
Not for Resale

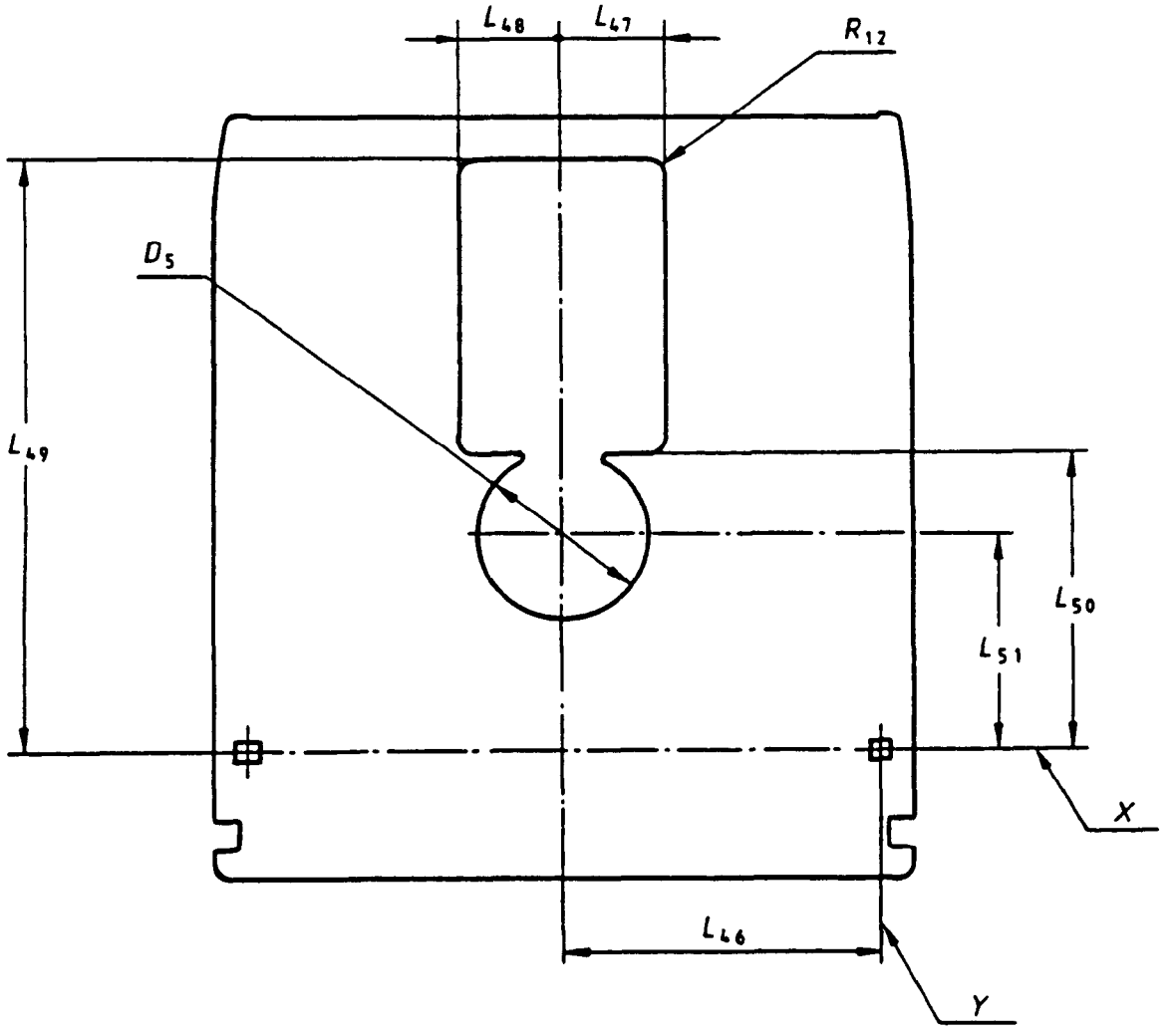

Figure 11 - Head and motor window

--`,,```,,,,````-`-`,,`,,`,`,,`---

Copyright International Organization for Standardization
Provided by IHS under license with ISO
No reproduction or networking permitted without license from IHS

Not for Resale

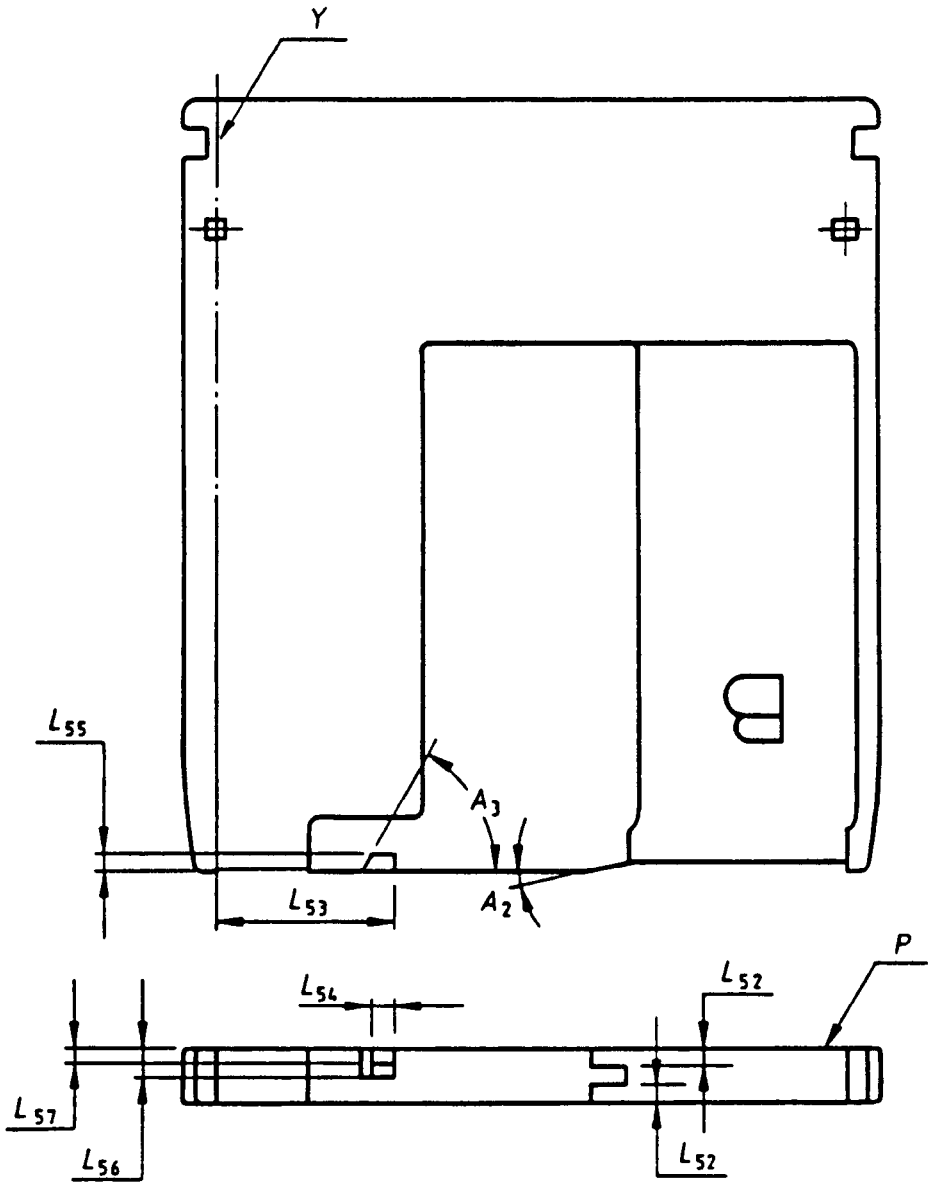

Figure 12 - Shutter opening feature

Copyright International Organization for Standardization
Provided by IHS under license with ISO
No reproduction or networking permitted without license from IHS
Not for Resale

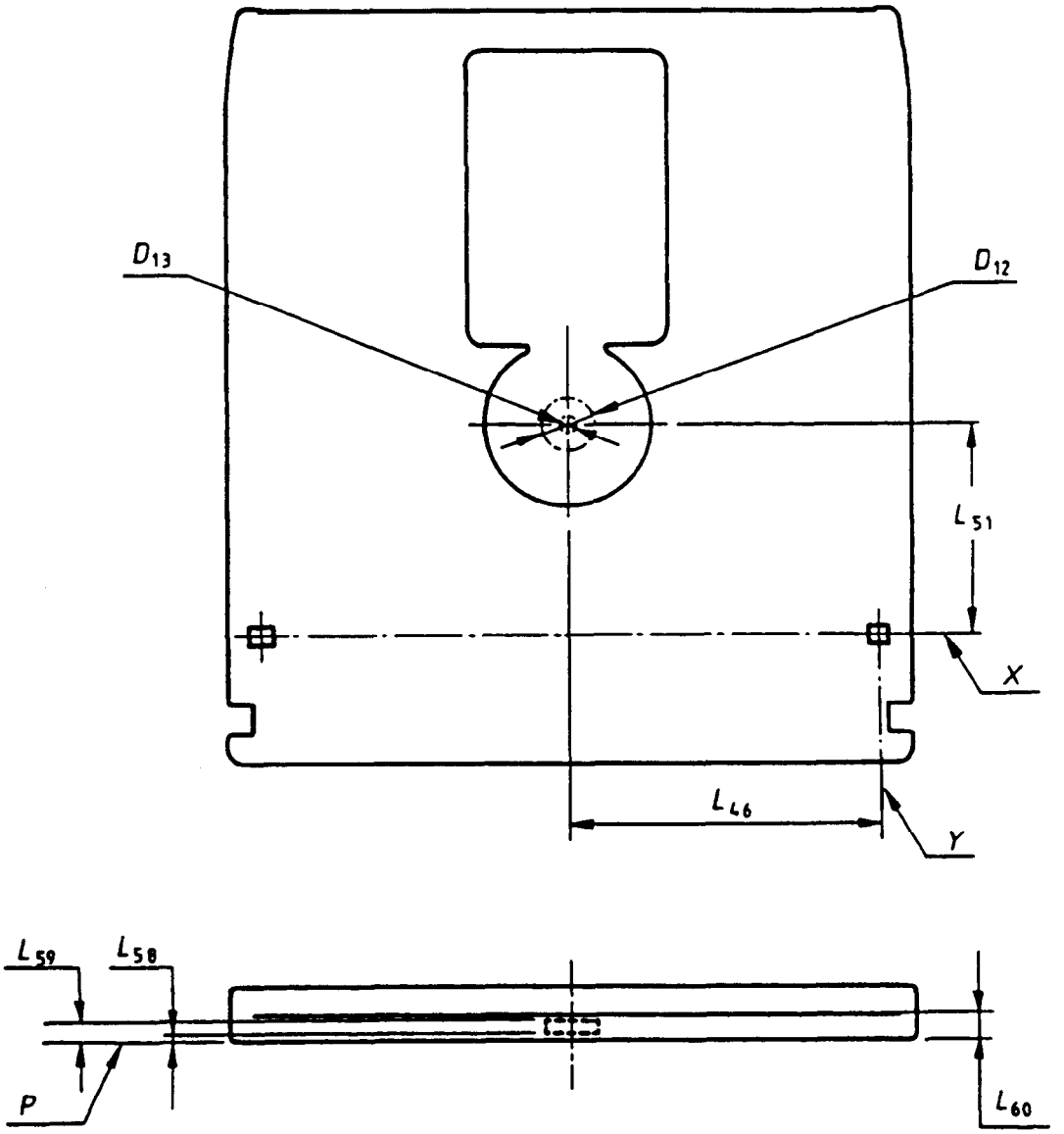

Figure 13 - Capture cylinder for the hub

Copyright International Organization for Standardization
Provided by IHS under license with ISO
No reproduction or networking permitted without license from IHS
Not for Resale

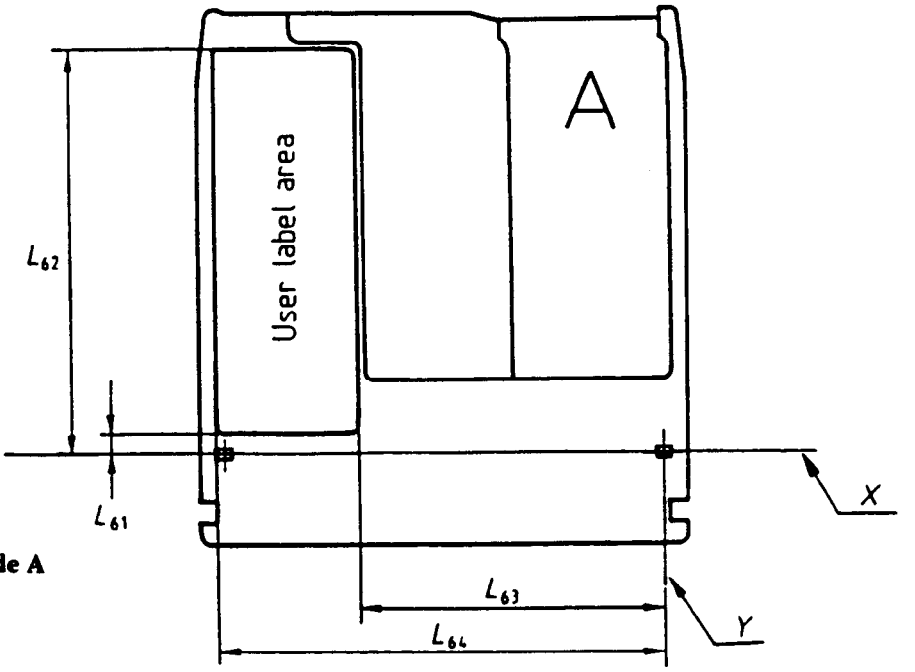

Figure 14.a - User label area on Side A

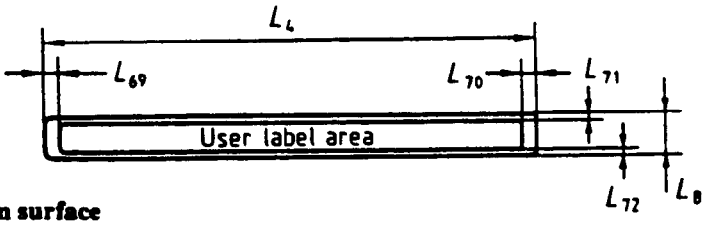

Figure 14.b - User label area on bottom surface

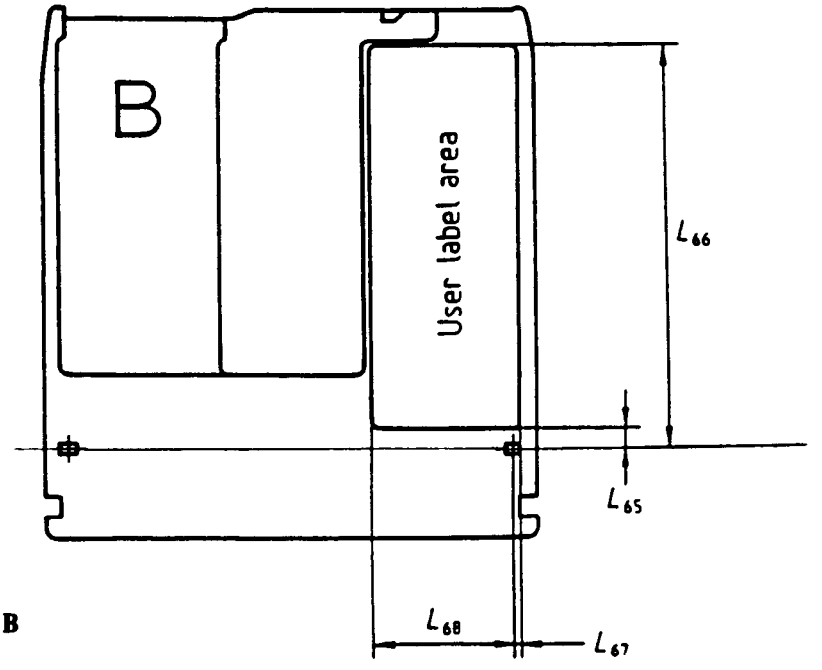

Figure 14.c - User label area on Side B

Figure 14 - User label area

Copyright International Organization for Standardization
Provided by IHS under license with ISO
No reproduction or networking permitted without license from IHS
Not for Resale

14 Characteristics of the substrate

14.1 Index of refraction

Within the Formatted Zone (see 16.2) the index of refraction of the substrate shall be within the range 1,46 to 1,60.

14.2 Thickness

The thickness of the substrate within the Formatted Zone shall be:

$$0,5093 \times \frac{n^3}{n^2 - 1} \times \frac{n^2 + 0,2650}{n^2 + 0,5929} \text{ mm} \pm 0,05 \text{ mm}$$

where n is the index of refraction.

15 Characteristics of recorded and embossed information

15.1 Method of testing

The requirements of this clause shall be met for the linear polarization of the optical beam, both when parallel and when perpendicular to the tracks.

The specifications of this clause specify only the average quality of the embossed information or of the recording layer. Local deviations from the specified values, called defects, can cause tracking errors, erroneous headers, or errors in the data fields. These errors are covered in Section 5.

15.1.1 Environment

All signals in this clause shall be within their specified ranges with the cartridge in any environment in the range of allowed operating environments defined in 8.1.2.

15.1.2 Use of the Reference Drive

All signals specified in this clause shall be measured in the indicated channels of the Reference Drive. The drive shall have the following characteristics for the purpose of these tests.

15.1.2.1 Optics and mechanics

The focussed optical beam shall have the properties defined in 9.2 a) to e). The disk shall rotate as specified in 9.5.

Two polarizations of the optical beam shall be used:

- with the polarization linear and parallel to the tracks,
- with the polarization linear and perpendicular to the tracks.

15.1.2.2 Read channel

The drive shall have a read channel, in which the total amount of light in the exit pupil of the objective lens is measured. This channel shall have the implementation as given by Channel 1 in 9.3.

The drive shall also have a read channel which can detect magneto-optical marks in the recording layer. This channel shall have an implementation equivalent to that given by Channel 2 in 9.3.

15.1.2.3 Tracking

During the measurement of the signals, the focus of the optical beam shall have an axial deviation of not more than

e_{max}(axial) = 0,93 µm

from the recording layer, and it shall have a radial deviation of not more than

Copyright International Organization for Standardization
Provided by IHS under license with ISO
No reproduction or networking permitted without license from IHS
Not for Resale

e_{max}(radial) = 0,10 µm

from the centre of a track.

The radial tracking servo used for this measurement requires a higher performance than that specified in 11.8.

15.1.3 Read conditions

Marks on the disk are read from the disk with a constant optical power.

The read power is the optical power incident at the entrance surface, used when reading, and is specified as follows for the stated zones (see 16.2):

a) PEP Zone
The read power shall not exceed 0,5 mW.

b) SFP Zone
The read power shall not exceed the value given in byte 6 of the PEP Zone (see 16.4.3.1.4).

c) Data zone
The read power shall not exceed the value given in byte 21 of the SFP Zone (see 16.5.2).

15.1.4 Write conditions

Marks are written on to the disk by pulses of optical power superimposed upon a specified bias power 1,5 mW ± 10 % (see annex L) in the presence of a magnetic field.

The pulse shape shall be as specified in annex C.

15.1.4.1 Write power

The write power is the optical power incident at the entrance surface, used when writing in the user zone.

Testing shall be carried out at either

- a constant pulse width and a write power appropriate to the band (see 16.2.1), as given in bytes 22 to 25 of the SFP Zone (see 16.5.2), or
- a constant write power given in byte 31 and a pulse width appropriate to the band, as given in bytes 32 to 34 of the SFP Zone (see 16.5.2).

For bands other than band 0, band 7, and band 15, the values shall be linearly interpolated from the above.

In all cases the actual power and pulse width used shall be within 5 % of those selected.

The required power shall not exceed

a) for a pulse width T_p between 10 ns and 70 ns:

$$55\left(\frac{1}{T_p}+\frac{1}{\sqrt{T_p}}\right)\text{mW}$$

b) for a pulse width exceeding 70 ns: 7,4 mW.

15.1.4.2 Write magnetic field

The requirements for all tests shall be met for all magnetic field intensities, at the recording layer during writing, in the range from 18 000 A/m to 32 000 A/m.

Copyright International Organization for Standardization
Provided by IHS under license with ISO
No reproduction or networking permitted without license from IHS
Not for Resale

The write magnetic field shall be normal to the recording surface. The direction of the write magnetic field shall be from the entrance surface to the recording layer.

15.1.5 Erase conditions

Marks are erased from the disk by a constant optical power in the presence of a magnetic field.

15.1.5.1 Erase power

The erase power is the optical power incident on the entrance surface of the disk and used for erasing marks. The erase power shall not exceed the value calculated according to requirements a) and b) in 15.1.4.1.

The tests shall be carried out at a temperature of 23 °C ± 2 °C and with an erase power appropriate to the band, given in bytes 45 to 47 and 159 to 161 of the control tracks. For bands other than those specified, the values shall be linearly interpolated. The actual power used shall be within ± 10 % of that selected.

For other temperatures, the values should be compensated as shown in annex L, in which a recommended maximum erase power for an additional rotational frequency is also shown.

15.1.5.2 Erase magnetic field

The requirements of all tests shall be met for all magnetic field intensities at the recording layer during erasing in the range from 18 000 A/m to 32 000 A/m.

15.2 Baseline reflectance

15.2.1 General

The baseline reflectance is the value of the reflectance of an unrecorded, grooved area of the Data Zone of the disk, measured through the substrate and does not include the reflectance of the entrance surface.

The nominal value R of the baseline reflectance shall be specified by the manufacturer:

- in byte 3 of the PEP Zone (see 16.4.3.1.4), and
- in byte 19 of the SFP Zone (see 16.5.2).

15.2.2 Measured value

The measured value R_m of the baseline reflectance shall be obtained under the conditions a) to e) of 9.2 and those of 15.1.3 using the split photo detector $(I_1+I_2)_{OL}$.

Measurements shall be made in the Data Zone in any track without embossed data fields.

15.2.3 Requirement

The value of R at the standard wavelength specified in 9.2 shall lie within the range of 0,10 and 0,30 for Type R/W, Type P-ROM, or Type WO disks and shall be not less than 0,35 for Type O-ROM disks.

At any point in the Data Zone, the value R_m shall be equal to R(1 ± 0,15) and lie within the allowed range.

This requirement specifies the range of values of R_m for all disks with the same value of R. In addition the variation of R_m shall meet the requirement

$$\frac{R_{m\,max} - R_{m\,min}}{R_{m\,max} + R_{m\,min}} \leq 0,12$$

where $R_{m\,max}$ is the maximum value of the measured reflectance in the Data Zone

$R_{m\,min}$ is the minimum value of the measured reflectance in the Data Zone.

Copyright International Organization for Standardization
Provided by IHS under license with ISO
No reproduction or networking permitted without license from IHS
Not for Resale

15.3 Magneto-optical recording in the Data Zone

15.3.1 Resolution

I_L is the peak-to-peak value of the signal obtained in Channel 2 (see 9.3) from marks written under any of the conditions given in 15.1.4 using the 8T pattern, where T corresponds to the time length of one Channel bit, at the frequency appropriate to the band and read under the conditions specified in 15.1.3c.

I_H is the peak-to-peak value of the signal obtained in Channel 2 from marks written under any of the conditions given in 15.1.4 using the 3T pattern at the frequency appropriate to the band and read under the conditions specified in 15.1.3c.

The resolution I_H/I_L (see figure 15) shall not be less than 0,3 within any sector. It shall not vary by more than 0,2 over a track.

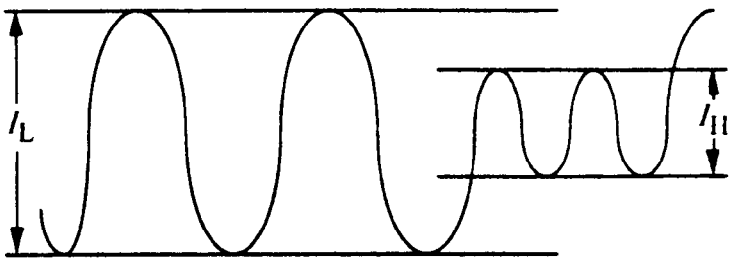

Figure 15 - Definition of I_L and I_H

15.3.2 Imbalance of magneto-optical signal

The imbalance of the magneto-optical signal is the ratio of the amplitude of the signal in Channel 2 over the amplitude of the signal in Channel 1 measured in the Data field of a sector. The effect of Kerr rotation shall be eliminated, e.g. by alternating the magnetized direction of the recording layer. The phase retarder in the optical system shall be in the neutral position (see 9.1). Imbalance can be caused by birefringence of the disk.

The imbalance shall not exceed 0,06 in the Data Zone, throughout the environmental operating range and in a bandwidth from d.c. to 40 kHz.

15.3.3 Vertical birefringence

The principal vertical birefringence value shall be contained as follows:

$$0 \leq |N_p - N_z| \leq 600 \times 10^{-6}$$

where N_p is the index of refraction along any direction in the plane of the disk and N_z is the index of refraction normal to the plane of the disk. (See annex P.)

15.3.4 Figure of merit for magneto-optical signal

The figure of merit F of the recording layer is a measure of the magnitude of the signal obtained from magneto-optical marks. It is defined as $R \sin\theta \cos 2\beta$, where R is the reflectance of the disk expressed as a decimal fraction, θ is the Kerr rotation of the optical polarization between a mark and no-mark, and β is the ellipticity of the reflected beam, averaged over the aperture. The polarity of the figure of merit is defined to be negative for a magneto-optical mark written in an Fe-rich Fe-Tb alloy recording layer with the write magnetic field in the direction specified in 15.1.4. In this case the direction of the Kerr rotation is counter-clockwise as seen from the incident beam.

The polarity and magnitude of the value of the figure of merit shall be as specified in bytes 364 and 365 of the SFP data (see 16.5.2). The figure of merit shall comply with

$$0{,}0025 < |F| < 0{,}0050$$

Copyright International Organization for Standardization
Provided by IHS under license with ISO
No reproduction or networking permitted without license from IHS
Not for Resale

The measurement of the actual value F_m shall be made according to annex E. This actual value F_m shall be within 12% of the nominal value.

15.3.5 Narrow-band signal-to-noise ratio

Write a track in the Data Zone under the conditions given in 15.1.4 using the 3T pattern at the frequency appropriate to the band. Read the Data fields in Channel 2 under the condition specified in 15.1.3 using a spectrum analyzer using the 3T pattern at the frequency appropriate to the band and a bandwidth of 30 kHz. Measure the amplitudes of the signal and the noise using 3T pattern at the frequency f_0 appropriate to the band (see figure 16). The narrow-band signal-to-noise ratio is

$$20 \log_{10}\left(\frac{\text{signal level}}{\text{noise level}}\right)$$

This ratio, after correction of any instrumentation errors and for the effects of Header fields, shall be greater than 43 dB for all tracks in the Data Zone and for all phase differences between -15° and +15° in the optical system as defined in 9.1.

NOTE 3 - It is permitted to use a spectrum analyzer with a bandwidth of 3 kHz and to convert the measured value to that for a 30 kHz value.

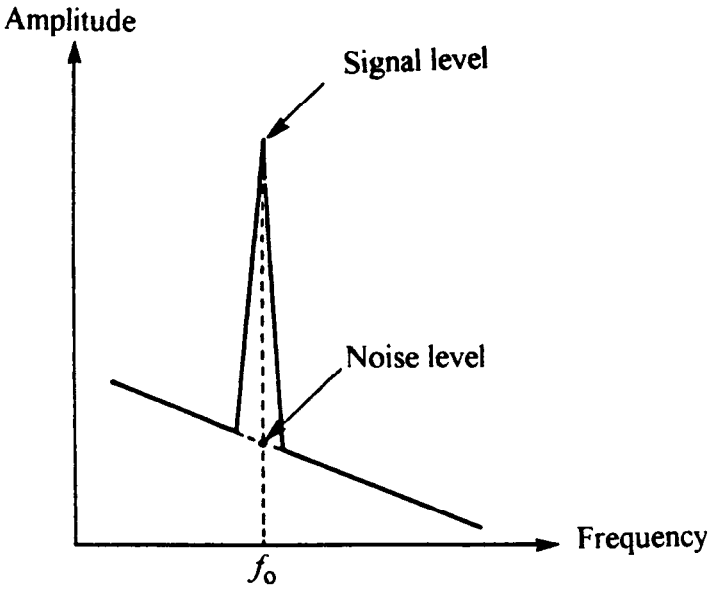

Figure 16 - Amplitude versus frequency for the magneto-optical signal

15.3.6 Cross-talk ratio

The cross-talk ratio definition and measurement procedure describes the entities to be measured in terms of physical tracks. These physical tracks can consist of one or more logical tracks (see clause 16). The number of logical tracks involved in the measurement must be adjusted for the band in which the measurement is made.

15.3.6.1 Rewritable Track Test Method

The cross-talk ratio for rewritable tracks is

Copyright International Organization for Standardization
Provided by IHS under license with ISO
No reproduction or networking permitted without license from IHS
Not for Resale

$$20\log_{10}\left(\frac{\text{signal level of physical track } n-1}{\text{signal level of physical track } n}\right)$$

and

$$20\log_{10}\left(\frac{\text{signal level of physical track } n+1}{\text{signal level of physical track } n}\right)$$

The following test shall be carried out on any group of five adjacent unrecorded tracks designated (n-2), (n-1), n, (n+1), (n+2), in the Rewritable Zone or the Write Once Zone:

a) Erase tracks (n-2), (n-1), n, (n+1), (n+2).
b) Write on the centre track n under the conditions given in 15.1.4.
c) Read tracks (n-1) and (n+1) under the conditions specified in 15.1.3c).

The cross-talk ratio shall be less than -26 dB in each case.

15.3.6.2 Embossed Track Test Method

The cross-talk ratio for embossed tracks is

$$20\log_{10}\left(\frac{\text{signal level of physical track } -160 \text{ after erase}}{\text{signal level of physical track } -161}\right)$$

and

$$20\log_{10}\left(\frac{\text{signal level of physical track 37 785 after erase}}{\text{signal level of physical track 37 786}}\right)$$

The following test shall be carried out on track -161 of the Inner Control Track SFP Zone, track -160 and track -159 of the Inner Manufacturer Zone, track 37 784 and track 37 785 of the Outer manufacturer Zone, and track 37 786 of the Outer Control Track SFP Zone. A similar choice of tracks could be taken from the Data Zone of a Type P-ROM disk.

a) Erase tracks -160, -159, 37 784, and 37 785.
b) Read tracks -160 and -161 using Channel 1 under the conditions specified in 15.1.3c).
c) Read tracks 37 785 and 37 786 using Channel 1 under the conditions specified in 15.1.3c).

Sector marks from adjacent tracks should be degated during this test.

The cross-talk ratio shall be less than -26 dB in each case.

15.3.7 Ease of erasure

Procedure

a) Write any track in the Data Zone under the conditions given in 15.1.4 and using the 3T pattern at the frequency appropriate to the band.

b) Read under the conditions specified in 15.1.3, using the spectrum analyzer with a centre frequency at the 3T pattern frequency f_0 appropriate to the band and a bandwidth of 30 kHz. Note the amplitude of the written marks.

c) Erase under the conditions of 15.1.5.

d) Repeat a) and c) 1000 times.

e) Repeat a)

f) Repeat b); note the signal level of the written marks and of the noise at the 3T pattern frequency appropriate to the band. (see figure 16).

g) Repeat c); note the residual signal level of the written marks at the 3T pattern frequency appropriate to the band.

Copyright International Organization for Standardization
Provided by IHS under license with ISO
No reproduction or networking permitted without license from IHS
Not for Resale

Requirements

The narrow-band signal-to-noise ratio, calculated from the readings in f) and after correction of any instrumentation errors and for the effects of the Header fields, shall be greater than 43 dB.

The residual signal in g) shall be less than -40 dB relative to the signal level of the written marks in b).

15.4 Characteristics of information

The characteristics of the signals read shall refer to signals obtained at the optical head. Each of these characteristics shall be measured with beams linearly polarized both perpendicular and parallel to the grooves under the conditions specified in 9.1 and 9.2.

15.4.1 Groove-related signals

I_1 and I_2 are the outputs of the two halves of the split photo diode detector in the tracking channel (see 9.1). $(I_1 + I_2)_{OL}$ indicates the sum output of the two halves of the split diode detector in the tracking channel when the beam is on land without embossed Data fields. $(I_1 - I_2)_{pp}$ and $(I_1 + I_2)_{pp}$ indicate the peak-to-peak amplitude of the difference and sum output, respectively, of the two halves of the split photodiode detector in the tracking channel when the beam crosses the tracks.

The following requirements shall be met (see figure 17):

- **Push-pull signal**

  Polarization: linear and parallel:

  Rewritable and Write Once $\quad 0{,}55 \leq \dfrac{(I_1-I_2)_{pp}}{(I_1+I_2)_{OL}} \leq 0{,}90$

  Embossed $\quad 0{,}35 \leq \dfrac{(I_1-I_2)_{pp}}{(I_1+I_2)_{OL}} \leq 0{,}90$

  Polarization: linear and perpendicular:

  Rewritable and Write Once $\quad 0{,}35 \leq \dfrac{(I_1-I_2)_{pp}}{(I_1+I_2)_{OL}} \leq 0{,}70$

  Embossed $\quad 0{,}22 \leq \dfrac{(I_1-I_2)_{pp}}{(I_1+I_2)_{OL}} \leq 0{,}70$

- **Cross-track signal**

  Polarization: linear and parallel:

  Rewritable and Write Once $\quad 0{,}23 \leq \dfrac{(I_1+I_2)_{pp}}{(I_1+I_2)_{OL}} \leq 0{,}65$

  Embossed $\quad 0{,}12 \leq \dfrac{(I_1+I_2)_{pp}}{(I_1+I_2)_{OL}} \leq 0{,}60$

  Polarization: linear and perpendicular:

  Rewritable and Write Once $\quad 0{,}30 \leq \dfrac{(I_1+I_2)_{pp}}{(I_1+I_2)_{OL}} \leq 0{,}75$

  Embossed $\quad 0{,}20 \leq \dfrac{(I_1+I_2)_{pp}}{(I_1+I_2)_{OL}} \leq 0{,}75$

Over the whole disk the value of this signal shall not vary by more than 3 dB.

Copyright International Organization for Standardization
Provided by IHS under license with ISO
No reproduction or networking permitted without license from IHS
Not for Resale

- **Phase depth**

  The phase depth of the grooves equals

  $$\frac{n \cdot d}{\lambda} \cdot 360°$$

  where n is the index of refraction of the substrate

  d is the groove depth

  λ is the wavelength

  The phase depth shall be less than 180°.

- **Track location**

  The tracks are located at those places on the disk where $(I_1 - I_2)$ equals zero and $(I_1 + I_2)$ has its maximum value.

15.4.2 Properties of pre-recorded marks

The signals specified below are obtained from Channel 1 (see 9.3), and shown in figure 17.

- **Sector Mark signal** (see 17.2.1)

  The Sector Mark signal shall meet the requirement

  $|I_{sm}| / I_{OL} \geq 0{,}55$

  where I_{sm} is the peak-to-peak amplitude of the read signal from the Sector Mark and I_{OL} is the reflectance on-land.

- **VFO signal** (see 17.2.2)

  The signals from the VFO_1 and VFO_2 fields shall meet the requirement

  $|I_{vfo}| / I_{OL} \geq 0{,}15$

  where I_{vfo} is the peak-to-peak amplitude of the read signal from the VFO area and I_{OL} is the reflectance on-land.

  In addition the condition

  $|I_{vfo}/I_{pmax}| \geq 0{,}35$

  shall be satisfied within each sector, where I_p is the signal in that sector from pre-recorded marks which are not Sector Marks.

- **Address Mark, ID and PA signals** (see 17.2.3, 17.2.4 and 17.2.5)

  The signals from these fields shall meet the requirements

  $I_P / I_{OL} \geq 0{,}15$

- **Embossed data signals in the Embossed Zone**

  The signals from any data embossed fields shall meet the requirements

- $I_{ROM} / I_{OL} \geq 0{,}15$

  $I_{pmin} / I_{pmax} \geq 0{,}35$ over any one track

  These requirements apply only to such marks having a repetition rate of less than 8T at the appropriate frequency for the band.

Copyright International Organization for Standardization
Provided by IHS under license with ISO
No reproduction or networking permitted without license from IHS
Not for Resale

15.4.3 Parameters of the read characteristics

Figure 17 shows the different parameters for the read characteristics.

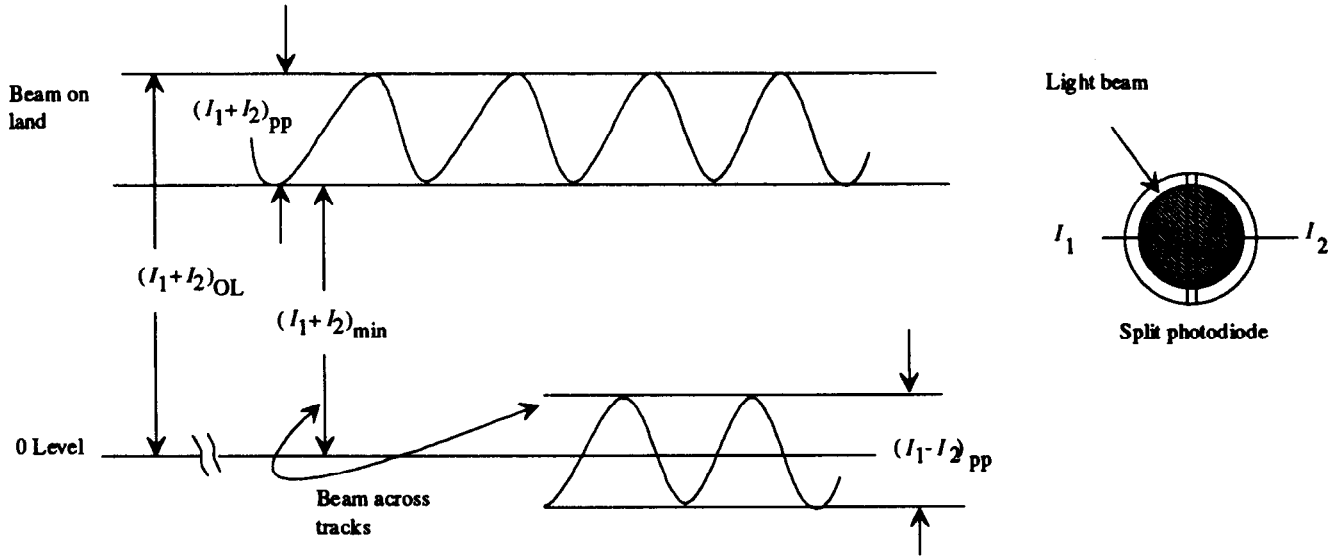

Signals from grooves in the tracking channel without embossed Datafields

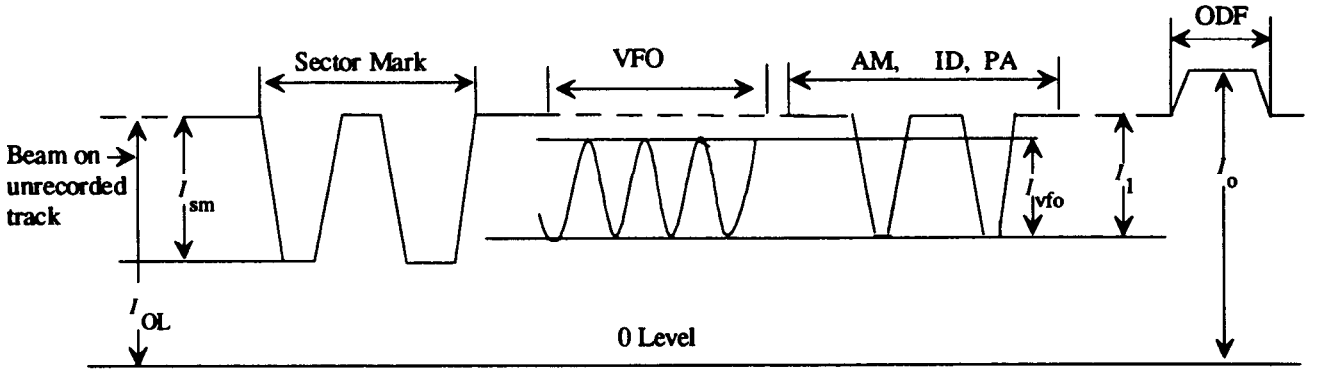

Signals from Headers in Channel 1

ECMA-93-0065-A

Figure 17 - Illustration of the various parameters for read characteristics

Copyright International Organization for Standardization
Provided by IHS under license with ISO
No reproduction or networking permitted without license from IHS
Not for Resale

Section 3 - Format of information

16 Features

16.1 Geometry of physical tracks

16.1.1 Shape

Each physical track shall form a 360° turn of a continuous spiral.

16.1.2 Direction of rotation

The disk shall rotate counter-clockwise as viewed by the objective lens. The physical track shall spiral outwards.

16.1.3 Physical track pitch

The physical track pitch is the distance between adjacent track centrelines, measured in a radial direction. It shall be 1,39 µm ± 0,08 µm.

The width of a set of 10 000 physical tracks shall be 13,90 mm ± 0,10 mm.

16.2 Formatted Zone

The Formatted Zone shall extend from radius 27,00 mm to radius 61,00 mm and shall be divided as shown in table 1. Dimensions are given as reference only, and are nominal locations.

From radius 29,522 mm to radius 61,00 mm the Formatted Zone shall be provided with tracks containing servo and address information.

16.2.1 Data Zone

The Data Zone shall be divided into 16 bands numbered 0 to 15. Each band shall contain the same number of physical tracks. These physical tracks are organized into groups called physical track groups. Each such group is further divided into logical tracks. Each band has 50 physical track groups. The number of logical tracks per physical track group increases from band to band moving from the inner radius to the outer radius (from 32 to 62 logical tracks per physical track group). Within any band, the angular recording density shall be constant. Physical track groups comprise an integral number of physical tracks and all physical track groups shall begin and end on the same radial line.

The hierarchy is thus:

17 or 31 sectors = 1 logical track (disks with 1 024-byte sectors or disks with 512-byte sectors)

32 to 62 logical tracks (27 physical tracks) = 1 physical track group

50 physical track groups = 1 band

16 bands = the Data Zone

The Data Zone shall start with track 0 and end with track 37 599.

16.2.1.1 User Area

The User Area shall start with track 3 and end with track 37 596. The User Area shall consist of one of the following: (see 18.1)

- Rewritable Zone
- Embossed Zone
- Partially Embossed Zone
- Write Once Zone

Copyright International Organization for Standardization
Provided by IHS under license with ISO
No reproduction or networking permitted without license from IHS
Not for Resale

16.2.2 Reflective Zone

This International Standard does not specify the format of the Reflective Zone, except that it shall have the same recording layer as the remainder of the Formatted Zone.

16.2.3 SFP Transition Zone

The SFP Transition Zone is an area in which the format changes from the Control Track PEP Zone without servo information to the Inner Control Track SFP zone which includes servo information.

16.2.4 Inner Control Track SFP Zone

The Inner Control Track SFP Zone shall begin at track -369 and end at track -161. The Inner Control Track SFP Zone shall be recorded with 17 or 31 sectors per physical track and have Sector IDs recorded on the same radial line and contain groove discontinuities in the Offset Detection Flag field (see 17.2.6).

16.2.5 Inner Manufacturer Zone

The Inner Manufacturer Zone is provided to allow the media manufacturer to perform tests on the disk, including write operations, in an area located away from recorded information. The inner and outer tracks of this zone are called Guard Bands and are not to be used (see table 1). The purpose of the Guard Bands is to protect and buffer the areas that contain information from accidental damage when the area between the Guard Bands is used for testing or calibration of the optical system. The Inner Manufacturer Zone shall be recorded at the same frequency and format as band 0.

16.2.6 Outer Manufacturer Zone

The Outer Manufacturer Zone shall comprise 186 tracks and shall begin one track after the last user track (track 37 599, see bytes 384, 385 of the SFP Zone). The information in the tracks from track 37 600 to track 37 785 is not specified by this International Standard and shall be ignored in interchange. Tracks 37 600 to 37 785 are reserved for testing by the manufacturer. The Outer Manufacturer Zone shall be recorded at the same frequency and format as band 15.

16.2.7 Outer Control Track SFP Zone

The Outer Control Track SFP Zone shall begin at track 37 786 and end at track 38 046. The Outer Control Track SFP Zone shall be recorded at 17 or 31 sectors per physical track and have Sector IDs recorded on the same radial line and contain groove discontinuities in the Offset Detection Flag field.

16.2.8 Lead-out Zone

The Lead-out Zone shall be used for positioning purposes only. The Lead-out Zone, if it contains sectors, shall be recorded at 17 or 31 sectors per physical track and have Sector IDs recorded on the same radial line and contain groove discontinuities in the Offset Detection Flag area.

16.2.9 Track number

Each logical track shall be identified by a unique track number.

Track 0 shall be located at radius 30,00 mm ± 0,10 mm.

The track numbers of logical tracks located at radii larger than that of track 0 shall be increased by 1 for each logical track.

The track numbers of logical tracks located at radii smaller than that of track 0 shall be negative and decrease by 1 for each logical track. Track -1 is indicated by (FF)(FF).

The following table shows the parameters associated with each area of the disk.

Copyright International Organization for Standardization
Provided by IHS under license with ISO
No reproduction or networking permitted without license from IHS
Not for Resale

Table 1 - Parameters of the zones

Zone or Band	Nominal radius Start-end (mm)	Physical track groups	Logical tracks per physical track group	Number of logical tracks	Logical track number Start-end	Number of physical tracks	Frequency MHz (1 800 rpm)
Clearance	17,500-27,000	N/A	N/A	N/A	N/A	N/A	
Reflective	27,001-29,000	N/A	N/A	N/A	N/A	N/A	
PEP	29,001-29,501	N/A	N/A	N/A	N/A	N/A	0,017
SFP Transition	29,502-29,520	N/A	N/A	14	-383 to -370	14	11,100
Inner SFP	29,522-29,811	N/A	N/A	209	-369 to -161	209	11,100
Inner Mfg:	29,812-29,999	5	32	160	-160 to -1	135	13,153
Guard Band	29,812-29,848	1	32	32	-160 to -129	27	13,153
For Mfg	29,850-29,961	3	32	96	-128 to -33	81	13,153
Guard Band	29,962-29,999	1	32	32	-32 to -1	27	13,153
Data:							
Band 0	30,000	50	32	1 600	0-1599	1 350	13,153
Band 1	31,877	50	34	1 700	1 600-3 299	1 350	13,976
Band 2	33,753	50	36	1 800	3 300-5 099	1 350	14,799
Band 3	35,630	50	38	1 900	5 100-6 999	1 350	15,621
Band 4	37,506	50	40	2 000	7 000-8 999	1 350	16,444
Band 5	39,383	50	42	2 100	9 000-1 1099	1 350	17,267
Band 6	41,259	50	44	2 200	11 100-13 299	1 350	18,090
Band 7	43,136	50	46	2 300	13 300-15 599	1 350	18,912
Band 8	45,012	50	48	2 400	15 600-17 999	1 350	19,735
Band 9	46,889	50	50	2 500	18 000-20 499	1 350	20,558
Band 10	48,765	50	52	2 600	20 500-23 099	1 350	21,381
Band 11	50,642	50	54	2 700	23 100-25 799	1 350	22,203
Band 12	52,518	50	56	2 800	25 800-28 599	1 350	23,026
Band 13	54,395	50	58	2 900	28 600-3 1499	1 350	23,849
Band 14	56,271	50	60	3 000	31 500-34 499	1 350	24,671
Band 15	58,148	50	62	3 100	34 500-37 599	1 350	25,494
Outer Mfg	60,024-60,136	3	62	186	37 600-37 785	81	25,494
Outer SFP	60,137-60,498	N/A	N/A	261	37 786-3 8046	261	11,100
Lead Out	60,499-60,998	N/A	N/A	360	38 047-38 406	360	11,100

Legend: N/A means "not applicable"

16.3 Control tracks

The three zones

- Control Track PEP Zone
- Inner Control Track SFP Zone
- Outer Control Track SFP Zone

shall be used for recording control track information.

The control track information shall be recorded in two different formats, the first format in the Control Track PEP Zone, and the second in the Inner and Outer Control Track SFP Zones. The Channel bit definitions used to describe the recording in the PEP and SFP are equal in length and spacing.

The Control Track PEP Zone shall be recorded using low frequency phase-encoded modulation and there shall be three PEP sectors per revolution.

The Inner and Outer Control Track SFP Zones shall each consist of a group of tracks recorded by the same modulation method and format as is used in band 0 of the Data Zone. However, the Inner and Outer Control Track SFP Zones are recorded at 17 or 31 sectors per physical track and have Sector IDs recorded on the same radial line and contain groove discontinuities in the Offset Detection Field.

Copyright International Organization for Standardization
Provided by IHS under license with ISO
No reproduction or networking permitted without license from IHS
Not for Resale

16.4 PEP Zone

This zone shall not contain any servo information. All information in this zone shall be pre-recorded in phase-encoded modulation. The marks in all tracks of the PEP Zone shall be radially aligned, so as to allow information recovery from this zone without radial tracking being established by the drive.

16.4.1 Recording in the PEP Zone

In the PEP Zone there shall be 561 to 567 PEP bit cells per revolution. A PEP bit cell shall be (656 ± 1) Channel bits long. A PEP bit is recorded by writing marks in either the first or the second half of the cell.

A mark shall be nominally two Channel bits long and shall be separated from adjacent marks by a space of nominally two Channel bits.

A ZERO shall be represented by a change from marks to no marks at the centre of the cell and a ONE by a change from no marks to marks at this centre.

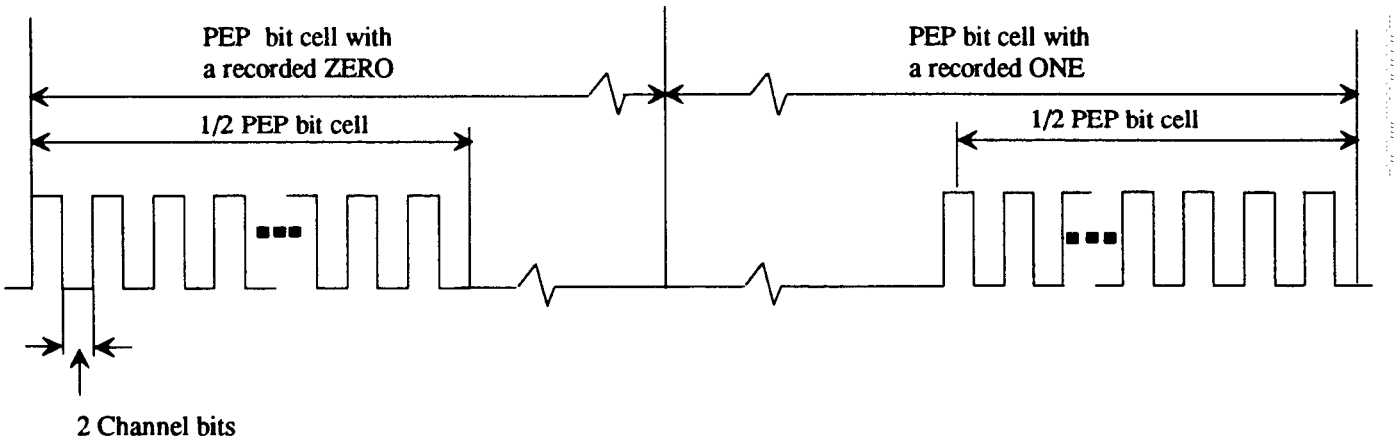

Figure 18 - Example of phase-encoded modulation in the PEP Zone

16.4.2 Cross-track loss

The density of tracks and the shape of marks in the PEP Zone shall be such that the cross-track loss meets the requirement

$$\left(\frac{I_{m_{max}}}{I_{m_{min}}}\right) < 2{,}0$$

The signal I is obtained from Channel 1 (see 9.3). The signal I_m is the maximum amplitude in a group of three successive marks. $I_{m\ max}$ is the maximum value and $I_{m\ min}$ is the minimum value of I_m obtained over one revolution. $I_{m\ max}$ shall be greater than 0,4 I_{OL}, where I_{OL} is the on-land reflectance. The effect of defects shall be ignored.

Copyright International Organization for Standardization
Provided by IHS under license with ISO
No reproduction or networking permitted without license from IHS
Not for Resale

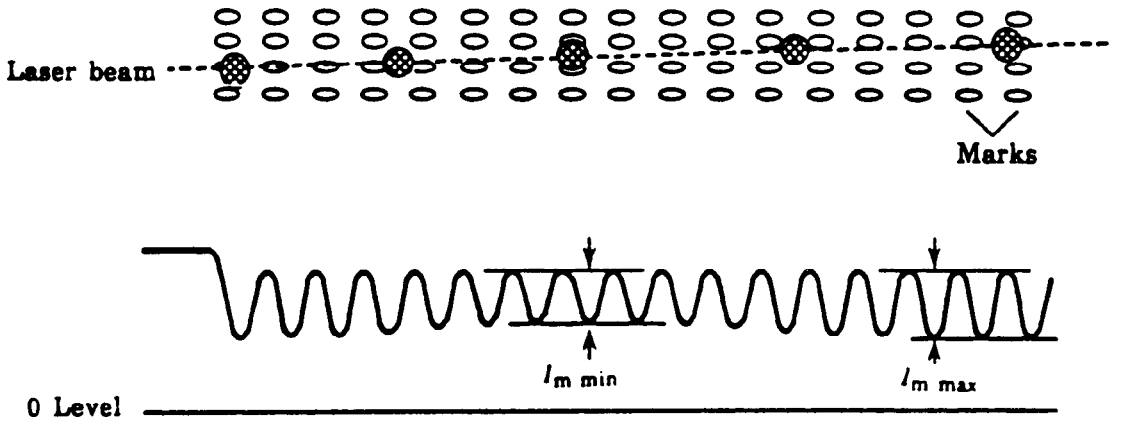

Figure 19 - Path of the laser beam when crossing tracks and resulting PEP signals

16.4.3 Format of the tracks of the PEP Zone

Each track in the PEP Zone shall have three sectors as shown in Figure 20. The numbers below the fields indicate the number of PEP bits in each field.

One Revolution Period (3 Sectors)					
Sector	Gap	Sector	Gap	Sector	Gap
177	10-12	177	10-12	177	10-12

Figure 20 - Track format in the PEP Zone

The gaps between sectors shall be unrecorded areas having a length corresponding to 10 to 12 PEP bits.

16.4.3.1 Format of a sector

Each sector of 177 PEP bits shall have the layout shown in Figure 21.

One Sector (177 Bits)				
Preamble	Sync	Sector Number	Data	CRC
16	1	8	144	8

Figure 21 - Sector format in the PEP Zone

16.4.3.1.1 Preamble field

This field shall consist of 16 ZEROs.

16.4.3.1.2 Sync field

This field shall consist of 1 ONE.

16.4.3.1.3 Sector Number field

This field shall consist of eight bits specifying in binary notation the Sector Number from 0 to 2.

Copyright International Organization for Standardization
Provided by IHS under license with ISO
No reproduction or networking permitted without license from IHS
Not for Resale

16.4.3.1.4 Data field

This field shall comprise 18 8-bit bytes numbered 0 to 17. These bytes shall specify the following:

Byte 0

bit 7 shall be set to ZERO

bits 6 to 4 shall be set to 110 indicating Logical ZCAV.

Other settings of these bits are prohibited by this International Standard.

bit 3 shall be set to ZERO

bit 2 to 0 shall be set to 000 indicating RLL (2,7) mark position modulation,

Other settings of these bits are prohibited by this International Standard.

Byte 1

bit 7 shall be set to ZERO

bits 6 to 4 specify the error correction code:

when set to 000 shall mean R-S LDC degree 16, and 10 interleaves,
when set to 001 shall mean R-S LDC degree 16, and 5 interleaves,

Other settings of these bits are prohibited by this International Standard.

bit 3 shall be set to ZERO

bit 2 to 0 these bits shall specify in binary notation the power n of 2 in the following formula which expresses the number of user bytes per sector

$$256 \times 2^n$$

Values of n other than 1 or 2 are prohibited by this International Standard.

Byte 2

This byte shall specify in binary notation the number of sectors in logical track 0. It shall be set to (11) for disks with 1024-byte sectors and (1F) for disks with 512-byte sectors.

Byte 3

This byte shall give the manufacturer's specification for the baseline reflectance R of the disk when measured at a nominal wavelength of 780 nm. It is specified as a number n (see 15.2.3) such that

$$n = 100\,R.$$

Byte 4

This byte shall specify that the recording is on-land and it shall indicate the signal amplitude of the pre-recorded marks.

bit 7 shall be set to ZERO to specify on-land recording.

The absolute value of the signal amplitude is given as a number n between -20 and -50, such that

$$n = -50(I_p/I_{OL})$$

where I_p is the signal from Channel 1 from the low frequency pre-recorded marks and I_{OL} is the on-land reflectance.

bits 6 to 0 shall express this number n. Bit 6 shall be set to ONE to indicate that this number is negative and expressed by bits 5 to 0 in TWO's complement. Recording is high-to-low.

Byte 5

This byte shall be set to (FF).

Copyright International Organization for Standardization
Provided by IHS under license with ISO
No reproduction or networking permitted without license from IHS
Not for Resale

Byte 6

This byte shall specify in binary notation a number *n* representing 20 times the maximum read power expressed in milliwatts which is permitted for reading the SFP Zone at a rotational frequency of 30 Hz and a wavelength of 780 nm. This number *n* shall be between 0 and 40.

Byte 7

The byte shall specify the Type of the ODC as specified by this International Standard.

0010 0000	shall mean Type R/W
0000 0000	shall mean Type O-ROM
1010 0000	shall mean Type P-ROM
0001 0001	shall mean Type WO

Other settings of this byte are prohibited by this International Standard.

Byte 8

This byte shall specify the most significant byte of the track number of the track in which the Outer Control Track SFP Zone starts. It shall be set to (93) representing the MSB of track number 37 786.

Byte 9

This byte shall specify the least significant byte of the track number in which the Outer Control Track SFP Zone starts. It shall be set to (9A) representing the LSB of track number 37 786.

Byte 10

This byte shall specify the most significant byte of the first track of the Inner SFP Control Track. It shall be set to (FE) representing the MSB of track number -369.

Byte 11

This byte shall specify the least significant byte of the first track of the Inner SFP Control Track. It shall be set to (8F) representing the LSB of track number -369.

Byte 12

This byte shall specify the track pitch in µm times 100. It shall be set to (8B) representing a track pitch of 1,39 µm.

Byte 13

This byte shall be set to (FF).

Bytes 14 to 17

The contents of these bytes are not specified by this International Standard, they may be used for manufacturer's identification. They shall be ignored in interchange.

16.4.3.1.5 CRC

The eight bits of the CRC shall be computed over the Sector Number field and the Data field of the PEP sector.

The generator polynomial shall be

$$G(x) = x^8 + x^4 + x^3 + x^2 + 1$$

The residual polynomial R(x) shall be

$$R(x) = \left(\sum_{i=144}^{i=151} a_i x^i + \sum_{i=0}^{i=143} a_i x^i \right) x^8 \bmod G(x)$$

where a_i denotes a bit of the input data and $\overline{a_i}$ an inverted bit. The highest order bit of the Sector Number field is a_{151}.

The eight bits c_k of the CRC are defined by

Copyright International Organization for Standardization
Provided by IHS under license with ISO
No reproduction or networking permitted without license from IHS
Not for Resale

$$R_c(x) = \sum_{k=0}^{k=7} c_k x^k$$

where c_7 is recorded as the highest order bit of the CRC byte of the PEP sector.

16.4.4 Summary of the format of the Data field of a sector

Table 2 - Format of the Data field of a sector of the PEP Zone

PEP Byte number	Description	Value
0	Data field	0110 0000
1	Error correction	0000 0010 or 0001 0001
2	Number of sectors in track 0	0001 1111 or 0001 0001
3	Baseline reflectance	xxxx xxxx
4	Signal amplitude of embossed data	0xxx xxxx
5	Reserved	1111 1111
6	Max. SFP read power	xxxx xxxx
7	ODC Type	xxxx 000x
8	Track number (MSB) of the first track of the Outer SFP Zone	1001 0011
9	Track number (LSB) of the first track of the Outer SFP Zone	1001 1010
10	Track number (MSB) of the first track of the Inner SFP Zone	1111 1110
11	Track number (LSB) of the first track of the Inner SFP Zone	1000 1111
12	Track pitch	1000 1011
13	Reserved	1111 1111
14 to 17	Not specified	xxxx xxxx

Legend: x indicates that thevalue depends on the usage.

16.5 Control Track SFP Zones

The two Control Track SFP Zones shall be pre-recorded in the standard sector format (see 17.2). The pre-recorded data marks shall satisfy the requirements for the VFO and ID fields specified in 17.2.2 and 17.2.4.

Each sector of the SFP Zones shall include 512 bytes of information numbered 0 to 511 and grouped in five sections;

- a duplicate of the PEP information (18 bytes),
- media information (366 bytes),
- system information (64 bytes),

Copyright International Organization for Standardization
Provided by IHS under license with ISO
No reproduction or networking permitted without license from IHS
Not for Resale

- bytes reserved for future standardization (32 bytes),
- contents not specified by this International Standard (32 bytes).

In the case of 1 024-byte sectors these first 512 bytes shall be followed by 512 (FF)-bytes.

16.5.1 Duplicate of the PEP information

Bytes 0 to 17 shall be identical with the 18 bytes of the Data field of a sector of the PEP Zone (see 16.4.3.1.4).

16.5.2 Media information

Bytes 18 to 359 specify read and write parameters at three laser wavelengths L_1 = 780 nm, L_2, and L_3. For each wavelength the baseline reflectance R_1, R_2 or R_3 is specified. The read and write powers are specified for four different rotational frequencies N_1 = 30 Hz, N_2, N_3 and N_4 for each wavelength. For each value of N, four sets of write powers are given: three sets for constant pulse width and one set for constant power. Each set contains values for bands 0, 7, and 15.

Bytes 18 to 25, bytes 31 to 34, bytes 44 to 47 specify the conditions for

L_1 = 780 nm and N_1 = 30 Hz.

All values specified in bytes 18 to 359 shall be such that the requirements of clauses 14 and 15 are met.

The mandatory requirements for the bytes in the control tracks are given in table 3.

Copyright International Organization for Standardization
Provided by IHS under license with ISO
No reproduction or networking permitted without license from IHS
Not for Resale

Table 3 - Requirements for Control Track bytes

Category	Mandatory	Optional or (FF)	Mandatory (FF)
Media Parameters	0-4, 6-12		5, 13
Unspecified		14-17	
L_1 & R_1	18-19		
N_1 Values	20-25, 31-34, 44-47		26-30, 35-43
N_2 Values		48-53, 59-62, 72-75	54-58, 63-71
N_3 Values		76-81, 87-90, 100-103	82-86, 91-99
N_4 Values		104-109, 115-118, 128-131	110-114, 119-127
L_2 & R_2		132-133	
N_1 Values		134-139, 145-148, 158-161	140-144, 149-157
N_2 Values		162-167, 173-176, 186-189	168-172, 177-185
N_3 Values		190-195, 201-204, 214-217	196-200, 205-213
N_4 Values		218-223, 229-232, 242-245	224-228, 233-241
L_3 & R_3		246-247	
N_1 Values		248-253, 259-262, 272-275	254-258, 263-271
N_2 Values		276-281, 287-290, 300-303	282-286, 291-299
N_3 Values		304-309, 315-318, 328-331	310-314, 319-327
N_4 Values		332-337, 343-346, 356-359	338-342, 347-355
Reserved			360-363
Figure of Merit	364-365		
Reserved			366-383
Last track number	384-385		
Reserved			386-389
Banding parameters	390-393		
Reserved			394-399
DDS information or (FF)	400-421 for Type P-ROM		400-421 for Types R/W, O-ROM and WO
Reserved			422-447
Unspecified		448-511	
1024-Byte sectors			512-1 023

Byte 18

This byte shall specify the wavelength L_1 in nanometres as a number n between 0 and 255 such that

$$n = 1/5\, L_1$$

This byte shall be set to $n = 156$ indicating L_1=780 nm for ODCs according to this International Standard.

Byte 19

This byte shall specify the baseline reflectance R_1 at wavelength L_1 as a number n (see 15.2.3) such that

$$n = 100\, R_1$$

Copyright International Organization for Standardization
Provided by IHS under license with ISO
No reproduction or networking permitted without license from IHS
Not for Resale

Byte 20

This byte shall specify the rotational frequency N_1 in hertz as a number n such that

$$n = N_1$$

This byte shall be set to $n = 30$ for ODCs according to this International Standard.

Byte 21

This byte shall specify the maximum read power P_1 in milliwatts for the Data Zone as a number n between 28 and 30 such that

$$n = 20\,P_1$$

The following bytes 22 to 30 specify, at constant pulse width, at the appropriate frequency for the band, the write power P_w in milliwatts indicated by the manufacturer of the disk. P_w is expressed as a number n between 0 and 255 such that

$$n = 5\,P_w$$

In these bytes T' stands for the constant pulse width at the appropriate frequency for the band, T for the time length of one Channel bit.

Byte 22

This byte shall specify P_w for:

$$T' = T \times 1{,}00$$

within Band 0.

Byte 23

This byte shall specify P_w for:

$$T' = T \times 1{,}00$$

within Band 7.

Byte 24

This byte shall specify P_w for:

$$T' = T \times 1{,}00$$

within Band 15.

Byte 25

This byte shall specify P_w for:

$$T' = T \times 0{,}50$$

within Band 0.

Bytes 26-30

These bytes shall be set to (FF)

Byte 31

This byte shall specify a constant write power P_w in milliwatts as a number n between 0 and 255 such that

$$n = 5P_w$$

Byte 32

This byte shall specify the write pulse width T_p in nanoseconds expressed by a number n between 0 and 255 such that

$$n = T_p$$

for the constant write power specified by byte 31 and within Band 0.

Copyright International Organization for Standardization
Provided by IHS under license with ISO
No reproduction or networking permitted without license from IHS
Not for Resale

Byte 33

This byte shall specify the write pulse width T_p in nanoseconds expressed by a number n between 0 and 255 such that

$$n = T_p$$

for the constant write power specified by byte 31 and within Band 7.

Byte 34

This byte shall specify the write pulse width T_p in nanoseconds expressed by a number n between 0 and 255 such that

$$n = T_p$$

for the constant write power specified by byte 31 and within Band 15.

Bytes 35 to 43

These bytes shall be set to (FF).

Byte 44

This byte shall be set to (00).

Byte 45

This byte shall express the erase power EP in milliwatts as a number n between 0 and 255 such that

$$n = 5\ EP$$

within Band 0.

Byte 46

This byte shall express the erase power EP in milliwatts as a number n between 0 and 255 such that

$$n = 5\ EP$$

within Band 7

Byte 47

This byte shall express the erase power EP in milliwatts as a number n between 0 and 255 such that

$$n = 5\ EP$$

within Band 15.

Byte 48

This byte shall specify, at wavelength L_1, the rotational frequency N_2 in hertz as a number n between 0 and 255 such that

$$n = N_2$$

If not used, it shall be set to (FF).

Byte 49

This byte shall specify the maximum read power P_2 in milliwatts for the Data Zone as a number n between 0 and 255 such that

$$n = 20\ P_2$$

Bytes 50 to 62

For the values specified in bytes 18, 19, 48 and 49, bytes 50 to 62 shall specify the parameters indicated in bytes 22 to 34.

Bytes 63 to 75

For the values specified in bytes 18, 19, 48 and 49, bytes 63 to 75 shall specify the parameters indicated in bytes 35 to 47.

Copyright International Organization for Standardization
Provided by IHS under license with ISO
No reproduction or networking permitted without license from IHS
Not for Resale

Byte 76

This byte shall specify, at wavelength L, rotational frequency N_3 in hertz expressed as a number n between 0 and 255 such that

$$n = N_3$$

Byte 77

This byte shall specify the maximum read power P_3 in milliwatts for the Data Zone, as a number n between 0 and 255 such that

$$n = 20 P_3$$

Bytes 78 to 90

For the values specified in bytes 18, 19, 76 and 77, bytes 78 to 90 shall specify the parameters indicated in bytes 22 to 34.

Bytes 91 to 103

For the values specified in bytes 18, 19, 76 and 77, bytes 91 to 103 shall specify the parameters indicated in bytes 35 to 47.

Byte 104

This byte shall specify, at wavelength L_1, rotational frequency N_4 in hertz as a number n between 0 and 255 such that

$$n = N_4$$

Byte 105

This byte shall specify the maximum read power P_4 in milliwatts for the Data Zone, as a number n between 0 and 255 such that

$$n = 20 P_4$$

Bytes 106 to 118

For the values specified in bytes 18, 19, 104 and 105, bytes 106 to 118 shall specify the parameters indicated in bytes 22 to 34.

Bytes 119 to 131

For the values specified in bytes 18, 19, 104 and 105, bytes 119 to 131 shall specify the parameters indicated in bytes 35 to 47.

Byte 132

This byte shall specify wavelength L_2, in nanometres as a number n between 0 and 255 such that

$$n = 1/5 L_2$$

Byte 133

This byte shall specify the baseline reflectance R_2 at wavelength L_2 as a number n between 0 and 100 such that

$$n = 100 R_2$$

Bytes 134 to 245

The allocation of information to, or the setting of, these bytes shall correspond to those of bytes 20 to 131. The values specified shall be for L_2 (byte 132) and R_2 (byte 133).

Byte 246

This byte shall specify the wavelength L_3 in nanometres as a number n between 0 and 255 such that

$$n = 1/5 L_3$$

Byte 247

This byte shall specify the baseline reflectance R_3 at wavelength L_3 as a number n between 0 and 100 such that

$$n = 100 R_3$$

Copyright International Organization for Standardization
Provided by IHS under license with ISO
No reproduction or networking permitted without license from IHS
Not for Resale

Bytes 248 to 359

The allocation of information to, or the setting of, these bytes shall correspond those of bytes 20 to 131. The values specified shall be for L_3 (byte 246) and R_3 (byte 247).

Bytes 360 to 363

These bytes shall be set to (FF).

Byte 364

This byte shall specify the polarity of the figure of merit. When set to (00) it shall mean that this polarity is positive (the direction of Kerr rotation due to the written mark is clockwise).

When set to (01) it shall mean that this polarity is negative.

Byte 365

This byte shall specify the figure of merit F as a number n between 25 and 50, such that

$$n = 10\,000\,F$$

Bytes 366 to 383

These bytes shall be set to (FF).

16.5.3 System Information

Bytes 384 and 385, they shall specify in binary notation the logical track number, 37 599, of the last logical track of the Data Zone. The total number of logical tracks in this zone is 37 600.

Byte 384

This byte shall be set to (92), which is the most significant byte of this number.

Byte 385

This byte shall be set to (DF), which is the least significant byte of this number.

Bytes 386-389

These bytes shall be set to (FF).

Byte 390

This byte shall be set to (10) to represent 16 bands.

Byte 391

This byte shall specify the banding constant for the media. It shall be set to (64). This is the difference in number of logical tracks between adjacent bands.

Bytes 392 and 393 shall specify in binary notation the number of physical tracks per band. They shall be set to (05) and (46) respectively to indicate 1 350 physical tracks.

Byte 392

This byte shall be set to (05), which is the most significant byte of this number.

Byte 393

This byte shall be set to (46), which is the least significant byte of this number.

Bytes 394 to 399

These bytes shall be set to (FF).

Copyright International Organization for Standardization
Provided by IHS under license with ISO
No reproduction or networking permitted without license from IHS
Not for Resale

Bytes 400 to 421

This information is required for Type P-ROM and contains parameter values for bytes 0 to 21 of the DDS. The value of Byte 3 of the DDS may be chosen during initialization and need not agree with SFP Byte 403. For Types R/W, O-ROM and WO, these bytes shall be set to (FF).

Bytes 422 to 447

These bytes shall be set to (FF).

16.5.4 Unspecified content

The contents of bytes 448 to 511 are not specified by this International Standard. They shall be ignored in interchange.

16.6 Requirements for interchange of a user-recorded cartridge

An interchanged optical disk cartridge according to this International Standard shall satisfy the following requirements on all tracks in the Data Zone.

16.6.1 Requirements for reading

The data recorded on the disk shall be readable under the read conditions specified in bytes 18 to 21 of the SFP Zone.

16.6.2 Requirements for writing and erasing

Data may be recorded on the disk under the write and erase conditions specified in bytes 18 to 47 of the SFP Zone or under the write conditions specified in some or all of the bytes 48 to 346 if provided. In either case the so recorded data shall satisfy the requirement of 16.6.1.

Copyright International Organization for Standardization
Provided by IHS under license with ISO
No reproduction or networking permitted without license from IHS
Not for Resale

Section 4 - Physical and logical format

17 Physical format

17.1 Track layout

17.1.1 Tracking

The format is characterized by continuous tracking centred between adjacent grooves that are performed on the disk.

All tracks shall have grooves which shall be continuous. Only the SFP and Lead-out Zones shall have groove discontinuities at the ODF. Recording shall be on-land.

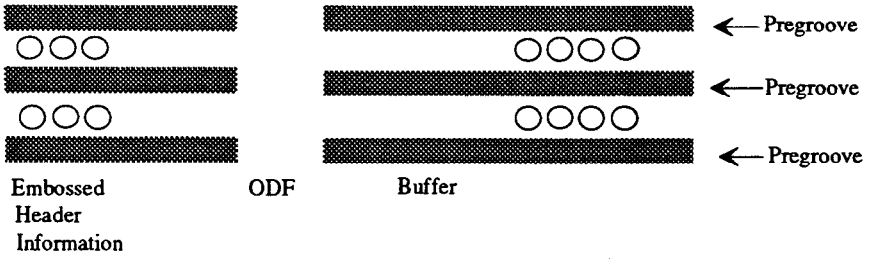

Figure 22 - Example of a sector in the SFP or Lead-out Zones with Offset Detection Flag

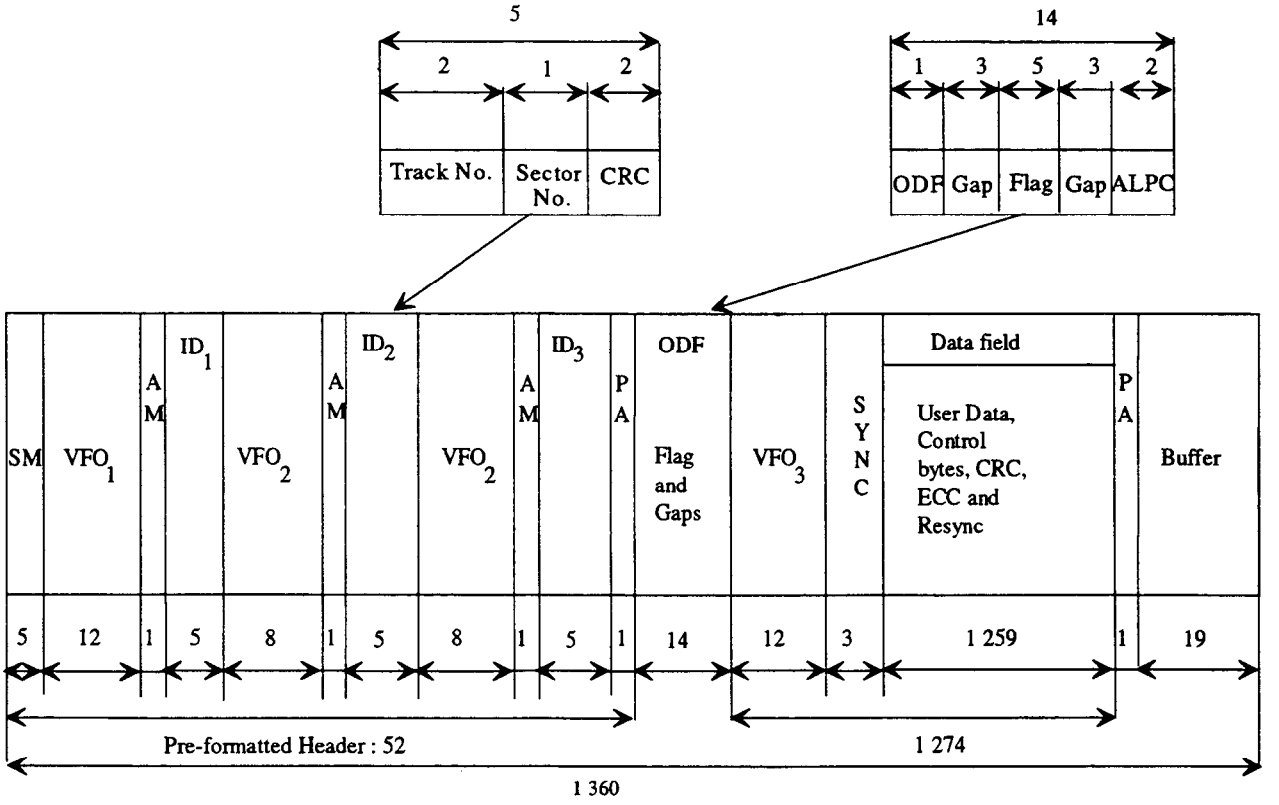

Figure 23 - Sector format for 1 024 user bytes

Copyright International Organization for Standardization
Provided by IHS under license with ISO
No reproduction or networking permitted without license from IHS
Not for Resale

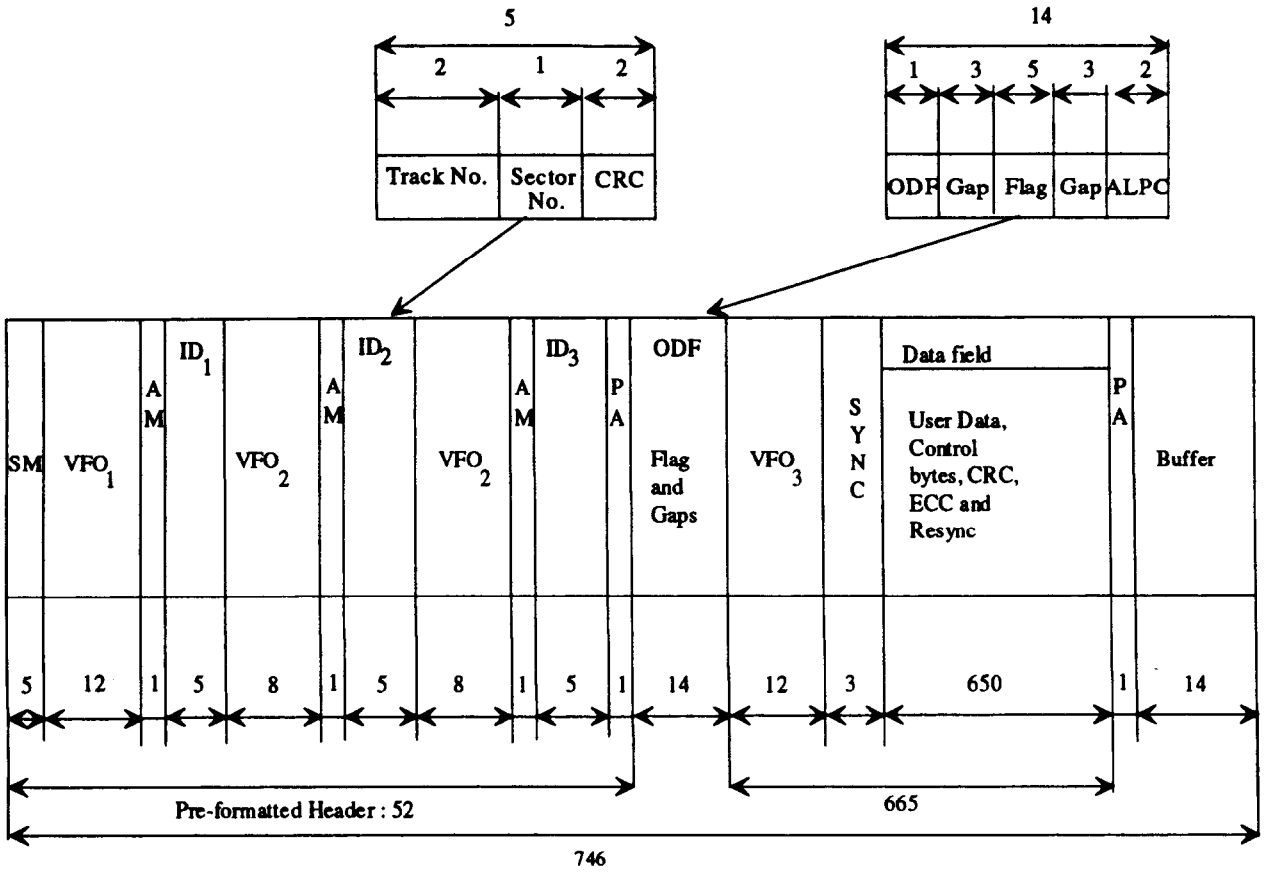

Figure 24 - Sector format for 512 user bytes

17.2 Sector format

Sectors shall have one of the two layouts shown in figure 23 and figure 24 depending on the number of user bytes in the Data field (see 17.2.11). The first sector on each logical track shall have the Sector Number 0. Sectors shall be numbered sequentially on each track. The number of user bytes per sector is specified by byte 1 of the PEP and SFP Zones. The pre-formatted area of 52 bytes, the Header, is the same for both sector formats.

On the disk 8-bit bytes shall be represented by 16 Channel bits (see 17.3).

In figure 23 and figure 24, the numbers above and below the fields indicate the number of bytes in each field.

17.2.1 Sector Mark

The Sector Mark shall consist of an embossed pattern that does not occur in RLL (2,7) code (see 17.3), and is intended to enable the drive to identify the start of the sector without recourse to a phase-locked loop.

The Sector Mark shall have a length of 80 Channel bits and shall consist of embossed, continuous long marks of different length followed by a lead-in to the VFO_1 field. The timing pattern of the Sector Mark shall be as shown in figure 25, where T is the period of one Channel bit. The signal obtained from a mark is less than a signal obtained from no mark. The lead-in shall have the Channel bit pattern 0000010010.

Copyright International Organization for Standardization
Provided by IHS under license with ISO
No reproduction or networking permitted without license from IHS
Not for Resale

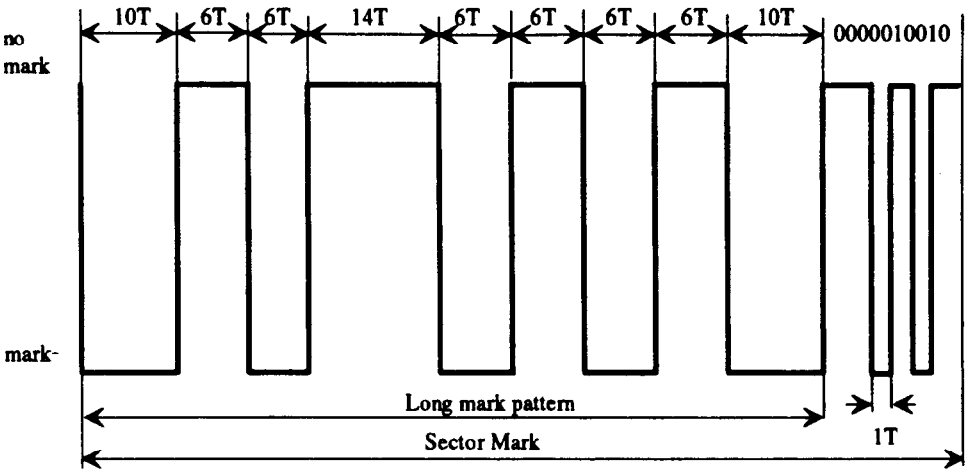

Figure 25 - Sector Mark pattern

17.2.2 VFO fields

There shall be one embossed VFO_1 field and two embossed VFO_2 fields in the Header and one VFO_3 field in the Recording field to give the voltage-frequency-oscillator of the read channel Channel bit synchronization. The information in VFO_1 and VFO_3 shall be identical in pattern and have the same length of 192 Channel bits. VFO_2 shall have a length of 128 Channel bits. The start of VFO_2 depends on the contents of the preceding ID field because of the closure required for the RLL (2,7) recording code. Therefore, VFO_2 shall be the appropriate one of two patterns differing only in the first Channel bit.

The continuous Channel bit pattern for VFO areas shall be:

VFO_1 : 192 Channel bits = 01001001001 010010
VFO_2 : 128 Channel bits = 10010010010 010010
VFO_2 : 128 Channel bits = 00010010010 010010
VFO_3 : 192 Channel bits = 01001001001 010010

17.2.3 Address Mark (AM)

The Address Mark shall consist of an embossed pattern that does not occur in RLL (2,7) code. The field is intended to give the drive byte synchronization for the following ID field. It shall have a length of 16 Channel bits with the following pattern:

0100 1000 0000 0100.

17.2.4 ID fields

The three ID fields shall each contain the address of the sector, i.e. the track number and the Sector Number of the sector, and CRC bytes. Each field shall consist of five bytes with the following embossed contents:

1st and 2nd Byte

These bytes shall specify, in binary notation, the track number. However, a value between (F000) and (FFFF) shall be considered a negative track address and a value between (0000) and (EFFF) shall be considered a positive track address. This is a result of the need for most of 16 bits (but not the full range) to address the positive address space.

3rd Byte

bits 7 and 6	when set to 00, shall identify the ID_1 field when set to 01, shall identify the ID_2 field when set to 10, shall identify the ID_3 field.
bit 5	shall be set to ZERO.
bits 4 to 0	shall specify, in binary notation, the Sector Number.

Copyright International Organization for Standardization
Provided by IHS under license with ISO
No reproduction or networking permitted without license from IHS
Not for Resale

4th and 5th Bytes

These two bytes shall specify a 16-bit CRC computed over the first three bytes of this field (see annex B).

17.2.5 Postamble (PA)

These fields shall be equal in length to 16 Channel bits, they follow the ID_3 field and the Data field. Due to the use of the RLL (2,7) encoding scheme (see 17.3), the framing of the last byte of the CRC in the ID_3 field is uncertain within a few bit times. The Postamble allows the last byte of the CRC and of the Data field to achieve closure and permits the ID and the Data fields to end always in a predictable manner. This is necessary in order to start the following ODF and Buffer fields in a consistent manner.

17.2.6 Offset Detection Flag (ODF)

This field shall be equal in length to 16 Channel bits. In the Inner and Outer SFP and Lead-out Zones it shall have neither grooves nor pre-formatted data. In all other areas, this field shall have grooves. This ungrooved and unrecorded field is often referred to as a Mirror Mark.

17.2.7 Gap

This field shall have a length of 48 Channel bits. Its content is not specified by this International Standard, it shall not be embossed and shall be ignored in interchange.

17.2.8 Flag

The content of this field is not specified by this International Standard, it shall be ignored in interchange. This field is included in the sector format only for compatibility with the sector format of ISO/IEC 9171-2 where its content is specified.

17.2.9 Auto Laser Power Control (ALPC)

This field shall consist of an unrecorded area equal in length to 32 Channel bits. It is intended for testing the laser power level.

17.2.10 Sync

This field shall have a length equal to 48 Channel bits. It shall be recorded with the Channel bit pattern:

0100 0010 0100 0010 0010 0010 0100 0100 1000 0010 0100 1000

17.2.11 Data field

This field shall consist of either:

- 1 259 bytes comprising
  - 1 024 user bytes
  - 223 bytes for CRC, ECC and Resync
  - 12 (FF) bytes

or

- 650 bytes comprising
  - 512 user bytes
  - 124 bytes for CRC, ECC and Resync
  - 12 (FF) bytes
  - 2 (FF)-bytes

The disposition of these bytes in the Data field is specified in annex D.

Copyright International Organization for Standardization
Provided by IHS under license with ISO
No reproduction or networking permitted without license from IHS
Not for Resale

17.2.11.1 User bytes

These bytes are at the disposal of the user for recording information. There are 1 024 or 512 such bytes depending on the sector format.

17.2.11.2 CRC and ECC

The computation of the check bytes of the CRC and ECC shall be as specified in annex D.

17.2.11.3 Bytes for control information

The bytes of this 12-byte field shall be set to (FF).

For disks of Type WO, this 12 byte field is intended to prevent inadvertent write operations over previously written data. When the sector does not contain user data, this field shall be unrecorded.

17.2.11.4 Last bytes of the Data field of the 512-byte sector format

The last two bytes of the Data field of the 512-byte sector format shall be set to (FF).

17.2.11.5 Resync

The Resync fields shall be inserted between the bytes of the Data field as specified in annex D.

17.2.12 Buffer

This field shall have a nominal length equal to 304 Channel bits (see figure 23) or of 224 Channel bits (see figure 24). Up to 16 additional Channel bits may be written in this field to allow completion of the RLL (2,7) coding scheme (see 17.3). The remaining length is to allow for motor speed tolerances and other electrical and/or mechanical tolerances.

17.3 Recording code

The 8-bit bytes in the three ID fields and in the Data field, except the Resync bytes, shall be converted to Channel bits on the disk according to table 4. All other fields in a sector have already been defined in terms of Channel bits. Each ONE Channel bit shall be recorded as a mark produced by a write pulse of the appropriate power and width.

The recording code used to record all data in the Formatted Zone of the disk shall be the run-length limited code known as RLL (2,7).

Table 4 - Conversion of input bits to Channel bits

Input bits	Channel bits
10	0100
010	100100
0010	00100100
11	1000
011	001000
0011	00001000
000	000100

The coding shall start at the first bit of the first byte of the field to be converted. After a Resync field, the RLL (2,7) coding shall start again with the first bit of the next byte of input data.

Copyright International Organization for Standardization
Provided by IHS under license with ISO
No reproduction or networking permitted without license from IHS
Not for Resale

The RLL (2,7) coding can seldom be stopped at the end of the last input in a field because of leftover bits which cannot be converted on their own. To achieve closure of the recording code, three pad bits are added at the end of the field before converting the data to Channel bits.

The ID_1 and ID_2 fields shall lead to one of the two patterns for the VFO_2.

The ID_3 field shall lead to one of two possible patterns in the PA field.

The bytes in the Data field preceding a Resync field shall lead to the Resync pattern.

18 Logical format

18.1 Format of the Data Zone

The Data Zone shall contain four Defect Management Areas (DMAs), two at the beginning of the zone and two at the end. The area between the two sets of DMAs is called the User Area. The User Area shall contain either a Rewritable Zone or an Embossed Zone or a Partially Embossed Zone or a Write Once Zone. If the User Area of a disk contains only rewritable data sectors (i.e. has a Rewritable Zone), the cartridge is of Type R/W. If the User Area of a disk contains both rewritable and embossed sectors (i.e. has a Partially Embossed Zone), the cartridge is of Type P-ROM. If the User Area of a disk contains only embossed sectors (i.e. has an Embossed Zone), the cartridge is of Type O-ROM. If the User Area of a disk contains sectors which can be written only once, (i.e. has a Write Once Zone), the cartridge is of Type WO.

The layout of the Data Zone and adjacent tracks shall be as shown in table 5 where the tracks marked R/W are rewritable tracks, tracks marked WO are write once tracks, and all other tracks are embossed.

Table 5 - Layout of the Data Zone

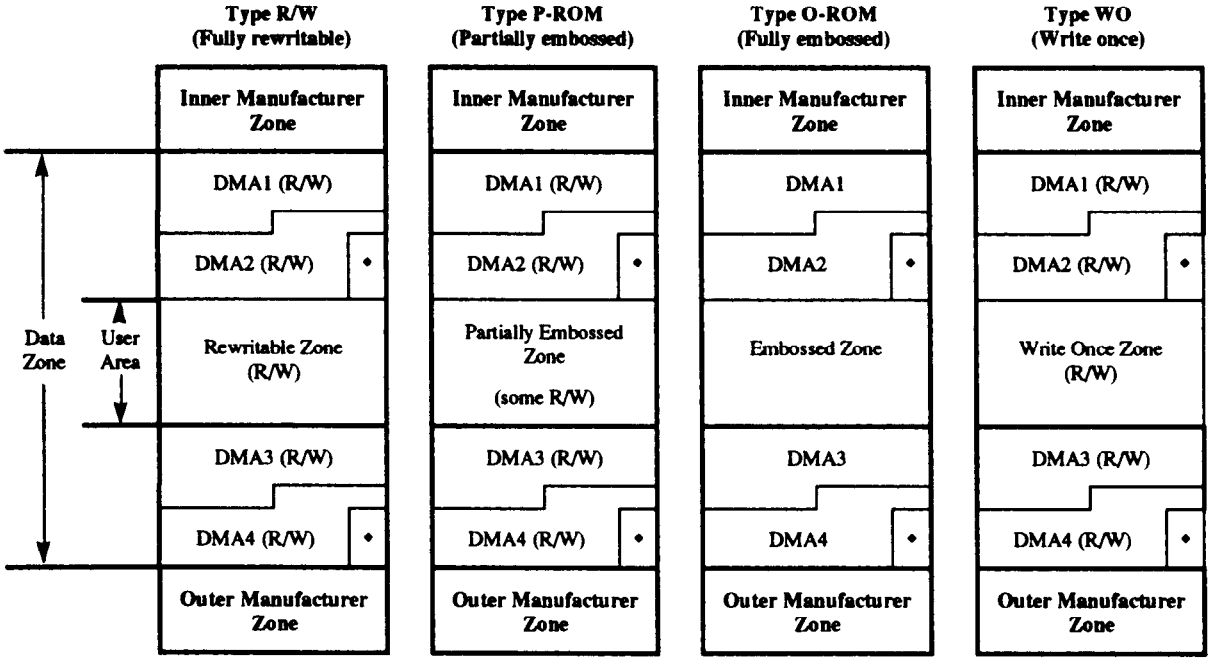

Legend: Areas marked ◆ are reserved.

18.1.1 Defect Management Areas

The four Defect Management Areas contain information on the structure of the Data Zone and on the defect management. The length of each DMA shall be 46 sectors for disks with 512-byte sectors and 25 sectors for disk with 1024-byte sectors. Two of the DMAs, DMA1 and DMA2, shall be located near the inner diameter of the disk; two others, DMA3 and DMA4, shall be located near the outer diameter of the disk. The boundaries of the DMAs are indicated in table 6.

Copyright International Organization for Standardization
Provided by IHS under license with ISO
No reproduction or networking permitted without license from IHS
Not for Resale

Table 6 - Locations of the DMAs

Area	512-byte sector format			1 024-byte sector format		
	Beginning Track-Sector	Ending Track-Sector	Length in sectors	Beginning Track-Sector	Ending Track-Sector	Length in sectors
DMA1	0 - 0	1 - 14	46	0 - 0	1 - 7	25
DMA2	1 - 15	2 - 29	46	1 - 8	2 - 15	25
Reserved	2 - 30	2 - 30	1	2 - 16	2 - 16	1
DMA3	37 597 - 0	37 598 - 14	46	37 597 - 0	37 598 - 7	25
DMA4	37 598 - 15	37 599 - 29	46	37 598 - 8	37 599 - 15	25
Reserved	37 599 - 30	37 599 - 30	1	37 599 - 16	37 599 - 16	1

Each DMA shall contain a Disk Definition Structure (DDS), a Primary Defect List (PDL), and a Secondary Defect List (SDL). The contents of the four PDLs shall be identical and the contents of the four SDLs shall be identical. The only differences between the contents of the four DDSs shall be the pointers to each associated PDL and SDL.

After initialization of the disk, each DMA shall have the following content:

- The first DMA sector shall contain the DDS.
- The second DMA sector shall be the first sector of the PDL for Types R/W, P-ROM and WO.
- The SDL shall be located immediately after the PDL for Types R/W, P-ROM and WO.

The lengths of the PDL and SDL are determined by the number of entries in each. Type O-ROM does not contain a PDL or SDL.

The content of the DMA sectors following the SDL is not specified for Types R/W, P-ROM and WO and shall be ignored in interchange. The bytes of the Data fields of the DMA sectors following the DDS for Type O-ROM shall be set to (FF).

The contents of the DDS are specified in 18.1.1.1; those of the PDL and SDL are specified in 18.3.1.5 and 18.3.1.6.

The bytes of the Data fields of the sectors indicated as Reserved in table 6 shall be set to (FF).

18.1.1.1 Disk Definition Structure (DDS)

The DDS shall consist of a table with a length of one sector. It specifies the method of initialization of the disk, the division of the Rewritable, Partially Embossed, Embossed, and Write Once Zones into groups, the kind of data sectors within each band, and the start addresses of the PDL and SDL. The DDS shall be recorded in the first sector of each DMA at the end of initialization of the disk. For Type O-ROM, the DDS shall be embossed.

For Type P-ROM, values for some of the DDS parameters are specified by the manufacturer and recorded in the Control Track SFP Zones.

The following information on the disk structure shall be recorded in each of the four DDSs:

Copyright International Organization for Standardization
Provided by IHS under license with ISO
No reproduction or networking permitted without license from IHS
Not for Resale

Table 7 - Bytes assignment of the Disk Definition Structure

Byte No.	Description	Type R/W	Type P-ROM	Type O-ROM	Type WO
0	DDS Identifier	(0A)	(0A)	(0A)	(05)
1	DDS Identifier	(0A)	(0A)	(0A)	(05)
2	Reserved	(00)	(00)	(00)	(00)
3	Disk is fully embossed	NA	NA	(00)	NA
	Disk has been certified	(01)	(01)	NA	(01)
	Disk has not been certified	(02)	(02)	NA	(02)
4	Number of groups MSB	(00)	(00)	(00)	(00)
5	Number of groups LSB (1 or 16)	(01) or (10)	(10)	(01) or (10)	(01) or (10)
6	Group 0	(01)	(01)	(02)	(04)
7	Group 1	(01)	(01) or (02)	(02)	(04)
8	Group 2	(01)	(01) or (02)	(02)	(04)
9	Group 3	(01)	(01) or (02)	(02)	(04)
10	Group 4	(01)	(01) or (02)	(02)	(04)
11	Group 5	(01)	(01) or (02)	(02)	(04)
12	Group 6	(01)	(01) or (02)	(02)	(04)
13	Group 7	(01)	(01) or (02)	(02)	(04)
14	Group 8	(01)	(01) or (02)	(02)	(04)
15	Group 9	(01)	(01) or (02)	(02)	(04)
16	Group 10	(01)	(01) or (02)	(02)	(04)
17	Group 11	(01)	(01) or (02)	(02)	(04)
18	Group 12	(01)	(01) or (02)	(02)	(04)
19	Group 13	(01)	(01) or (02)	(02)	(04)
20	Group 14	(01)	(01) or (02)	(02)	(04)
21	Group 15	(01)	(01) or (02)	(02)	(04)
22	Start of PDL, Track MSB	-	-	(FF)	-
23	Start of PDL Track	-	-	(FF)	-
24	Start of PDL, Track LSB	-	-	(FF)	-
25	Start of PDL Sector	-	-	(FF)	-
26	Start of SDL, Track MSB	-	-	(FF)	-
27	Start of SDL Track	-	-	(FF)	-
28	Start of SDL, Track LSB	-	-	(FF)	-
29	Start of SDL Sector	-	-	(FF)	-
.	.				
.	.				
.	.				
	(00)	(00)	(00)	(00)	(00)

Legend:

The symbol (-) means that the appropriate value is to be entered in the DDS.
The symbol NA means "not applicable".

For bytes 6 to 21:

- (01) means that the group is a rewritable group,
- (02) means that the group is an embossed group,
- (04) means that the group is a write once group.

18.1.2 Type R/W (Fully rewritable disks)

Type R/W cartridges shall have a Rewritable Zone. The Rewritable Zone is intended for the user to write data into. The Data field of all sectors in this zone shall not contain any embossed data.

The Rewritable Zone shall extend from sector 0 of track 3 to the last sector of track 37 596. Each band in Type R/W shall be recorded in bytes 6-21 of the DDS as being rewritable.

18.1.3 Type O-ROM (Fully embossed disks)

Type O-ROM cartridges shall have an Embossed Zone. It shall contain data embossed by the manufacturer of the disk. The layout of the Data field of all sectors in this zone shall be as specified in annex D.

Copyright International Organization for Standardization
Provided by IHS under license with ISO
No reproduction or networking permitted without license from IHS
Not for Resale

The Embossed Zone shall extend from sector 0 of track 3 to the last sector of track 37 596. Each band of Fully Embossed Disks shall be recorded in bytes 6-21 of the DDS as being embossed.

18.1.4 Type P-ROM (Partially embossed disks)

Type P-ROM cartridges shall have a Partially Embossed Zone. Band 0 of Type P-ROM shall contain only rewritable sectors. Bands 1 to 15 of Type P-ROM may be selected by the manufacturer to contain only rewritable sectors or only embossed sectors (except for tracks 37 597 to 37 599 which shall contain only rewritable sectors). The layout of the Data field of all sectors in this zone shall be as specified in annex D.

The Partially Embossed Zone shall extend from sector 0 of track 3 to the last sector of track 37 596. Each band of Type O-ROM cartridges shall be recorded in bytes 6 to 21 of the DDS as being either rewritable or embossed, except band 0 which shall be always rewritable.

18.1.5 Type WO (Write once disks)

Type WO cartridges shall have a Write Once Zone. The Write Once Zone is intended for the user to write data into. The Data field of all sectors in this zone shall not contain any embossed data.

The Write Once Zone shall extend from sector 0 of track 3 to the last sector of track 37 596. Each band shall be recorded in bytes 6 to 21 of the DDS as being write once.

18.2 Partitioning

18.2.1 Type R/W (Fully rewritable disks)

During initialization of cartridges of Type R/W, the Rewritable Zone shall be partitioned into 1 or 16 consecutive groups. If one group is used, it shall span the entire User Area; if 16 groups are used, each group shall span one complete band with the exception of tracks 0 to 2 in band 0 and 37 597 to 37 599 in band 15. Each group shall comprise full tracks of data sectors followed by full tracks of spare sectors. The number of spare tracks per group are shown in tables 8 and 9. The logical track numbers associated with each group are shown in tables 10 and 11.

18.2.2 Type P-ROM (Partially embossed disks)

During preparation of the embossed data for manufacturing of the disk of cartridges of Type P-ROM, the disk shall be partitioned into 16 groups. Group 0 shall be designated as a rewritable group, and each group 1 to 15, shall be designated as either a rewritable group or an embossed group. The data and spare (or Parity) area characteristics of a group are taken from either the rewritable or the Fully Embossed definition, whichever is appropriate. Each group shall comprise full tracks of data sectors followed by full tracks of spare sectors or parity sectors and shall span one complete band with the exception of tracks 0 to 2 and 37 597 to 37 599. The number of spare sector tracks and parity sector tracks for each band is given in tables 8 and 9. The logical track numbers associated with each group are shown in table 11.

Bytes 0 to 21 of the DDS for the disk shall be recorded in the SFPs.

18.2.3 Type O-ROM (Fully embossed disks)

During preparation of the embossed data for manufacturing of the disk of cartridges of Type O-ROM, the disk shall be partitioned into either 1 or 16 groups. If one group is used, it shall span the entire User Area; if 16 groups are used, each of the 16 groups will span one band with the exception of tracks 0 to 2 and 37 597 to 37 599. Each group shall comprise full tracks of data sectors followed by full tracks of parity sectors. The number of parity sector tracks for each band is given in tables 8 and 9. The logical track numbers associated with each group are shown in tables 10 and 11.

18.2.4 Type WO (Write once disks)

During initialization of cartridges of Type WO, the Write Once Zone shall be partitioned into 1 or 16 consecutive groups. If one group is used, it shall span the entire Write Once Zone; if 16 groups are used, each group will span one complete band with the exception of tracks 0 to 2 in band 0 and tracks 37 597 to 37 599 of band 15. Each group shall comprise full tracks of data sectors followed by full tracks of spare sectors.

Copyright International Organization for Standardization
Provided by IHS under license with ISO
No reproduction or networking permitted without license from IHS
Not for Resale

Table 8 - Use of tracks for disks with 512-byte sectors

Band Number	1 Group				16 Groups			
	512-byte sectors Rewritable and Write Once		512-byte sectors Embossed		512-byte sectors Rewritable and Write Once		512-byte sectors Embossed	
	Number of Data Sector Tracks	Number of Spare Sector Tracks	Number of Data Sector Tracks	Number of Parity Sector Tracks	Number of Data Sector Tracks	Number of Spare Sector Tracks	Number of Data Sector Tracks	Number of Parity Sector Tracks
0	1 597	0	1 597	0	1 594	3	1 547	50
1	1 700	0	1 700	0	1 697	3	1 646	54
2	1 800	0	1 800	0	1 797	3	1 743	57
3	1 900	0	1 900	0	1 897	3	1 840	60
4	2 000	0	2 000	0	1 996	4	1 937	63
5	2 100	0	2 100	0	2 096	4	2 034	66
6	2 200	0	2 200	0	2 196	4	2 131	69
7	2 300	0	2 300	0	2 296	4	2 228	72
8	2 400	0	2 400	0	2 396	4	2 325	75
9	2 500	0	2 500	0	2 496	4	2 421	79
10	2 600	0	2 600	0	2 595	5	2 518	82
11	2 700	0	2 700	0	2 695	5	2 615	85
12	2 800	0	2 800	0	2 795	5	2 712	88
13	2 900	0	2 900	0	2 895	5	2 809	91
14	3 000	0	3 000	0	2 995	5	2 906	94
15	3 030	67	1 915	1 182	3 091	6	3 000	97
Total	3 7527	67	36 412	1 182	37 527	67	36 412	1 182

The total number of spare sectors for disks with 512-byte sectors is 2 077.

Copyright International Organization for Standardization
Provided by IHS under license with ISO
No reproduction or networking permitted without license from IHS
Not for Resale

Table 9 - Use of tracks for disks with 1 024-byte sectors

Band Number	1 Group				16 Groups			
	1 024-byte sectors Rewritable and Write Once		1 024-byte sectors Embossed		1 024-byte sectors Rewritable and Write Once		1 024-byte sectors Embossed	
	Number of Data Sector Tracks	Number of Spare Sector Tracks	Number of Data Sector Tracks	Number of Parity Sector Tracks	Number of Data Sector Tracks	Number of Spare Sector Tracks	Number of Data Sector Tracks	Number of Parity Sector Tracks
0	1 597	0	1 597	0	1 592	5	1 508	98
1	1 700	0	1 700	0	1 695	5	1 605	95
2	1 800	0	1 800	0	1 794	6	1 700	100
3	1 900	0	1 900	0	1 894	6	1 794	106
4	2 000	0	2 000	0	1 994	6	1 888	112
5	2 100	0	2 100	0	2 093	7	1 983	117
6	2 200	0	2 200	0	2 193	7	2 077	123
7	2 300	0	2 300	0	2 293	7	2 172	128
8	2 400	0	2 400	0	2 392	8	2 266	134
9	2 500	0	2 500	0	2 492	8	2 361	139
10	2 600	0	2 600	0	2 592	8	2 455	145
11	2 700	0	2 700	0	2 691	9	2 550	150
12	2 800	0	2 800	0	2 791	9	2 644	156
13	2 900	0	2 900	0	2 891	9	2 738	162
14	3 000	0	3 000	0	2 990	10	2 833	167
15	2 976	121	1 001	2 096	3 086	11	2 924	173
Total	37 473	121	35 498	2 096	37 473	121	35 498	2 096

The total number of spare sectors for disks with 1 024-byte sectors is 2 057.

Table 10 - Track numbers for disks with 1 group (Types R/W, O-ROM, or WO)

Group	512-byte or 1024-byte sectors	512-byte sectors		1 024-byte sectors	
	First data sector track	R/W or WO: First spare sector track in group	Embossed: First parity sector track in group	R/W or WO: First spare sector track in group	Embossed: First parity sector track in group
0	3	37 530	36 415	37 476	35 501

Copyright International Organization for Standardization
Provided by IHS under license with ISO
No reproduction or networking permitted without license from IHS
Not for Resale

Table 11 - Track numbers for disks with 16 groups (Types R/W, P-ROM, O-ROM, or WO)

Group	512-byte or 1024-byte sectors	512-byte sectors		1 024-byte sectors	
	First data sector track	R/W or WO: First spare sector track in group	Embossed: First parity sector track in group	R/W or WO: First spare sector track in group	Embossed: First parity sector track in group
0	3	1 597	1 550	1 595	1 511
1	1 600	3 297	3 246	3 295	3 205
2	3 300	5 097	5 043	5 094	5 000
3	5 100	6 997	6 940	6 994	6 894
4	7 000	8 996	8 937	8 994	8 888
5	9 000	11 096	11 034	11 093	10 983
6	11 100	13 296	13 231	13 293	13 177
7	13 300	15 596	15 528	15 593	15 472
8	15 600	17 996	17 925	17 992	17 866
9	18 000	20 496	20 421	20 492	20 361
10	20 500	23 095	23 018	23 092	22 955
11	23 100	25 795	25 715	25 791	25 650
12	25 800	28 595	28 512	28 591	28 444
13	28 600	31 495	31 409	31 491	31 338
14	31 500	34 495	34 406	34 490	34 333
15	34 500	37 591	37 500	37 586	37 424

18.3 Defect management

18.3.1 R/W and WO Zones: Spare sectors

Defective sectors in a Rewritable Zone or a Write Once Zone or in rewritable groups of a Partially Embossed Zone shall be replaced by good sectors according to the defect management method described below. The disk shall be initialized before use. This International Standard allows initialization with or without certification. Defective sectors are handled by a Linear Replacement Algorithm and optionally, a sector Slipping Algorithm. The total number of defective sectors replaced by both algorithms shall not be greater than 2 077 for disks with 512-byte sectors and 2 057 for disks with 1 024-byte sectors.

18.3.1.1 Initialization of the disk

During initialization of the disk, the four DMAs are recorded prior to the first use of the disk. Each rewritable group and write once group shall contain a number of full tracks for data sectors followed by a number of full tracks for spare sectors. The spare sectors can be used as replacements for defective data sectors. Initialization can include a certification of the rewritable groups and the write once groups, whereby defective sectors are identified and skipped.

Cartridges of Type WO shall be initialized once only. Once the DMAs are recorded, it indicates that the disk is initialized and that no further initialization is permitted. All sectors in the Write Once Zone shall be in the erased state at the end of initialization.

All DDS parameters shall be recorded in the four DDS sectors. The PDL and SDL shall be recorded in the four DMAs. The contents of the PDLs and SDLs are shown in tables 12 and 13.

Copyright International Organization for Standardization
Provided by IHS under license with ISO
No reproduction or networking permitted without license from IHS
Not for Resale

18.3.1.2 Certification

If the disk is certified, the certification shall be applied to the data sectors and to the spare sectors in the groups. The method of certification is not stated by this International Standard. It may involve erasing, writing, and reading the sectors in the groups. Defective sectors found during certification shall be handled by the Slipping Algorithm or, where applicable, by the Linear Replacement Algorithm. Defective sectors shall not be used for reading or writing. Guidelines for replacing defective sectors are given in annex M.

18.3.1.2.1 Slipping Algorithm

The Slipping Algorithm shall be applied individually to each and every rewritable or write once group if certification is performed.

A defective data sector found during certification shall be replaced by the first good sector following the defective sector, and so causes a slip of one sector towards the end of the group. The last data sectors will slip into the spare sector area of the group. This method is referred to group-before-slip. The address of the defective sector is written in the PDL. If no defective sectors are found during certification, an empty PDL is recorded.

The addresses of spare sectors, beyond the last data sector slipped into the spare area, if any, which are found to be defective during certification shall be recorded in the PDL. Thus, the number of available spare sectors is diminished accordingly.

If the spare sector area of a group becomes exhausted during certification, the defective sector shall be handled by the Linear Replacement Algorithm. This process involves assigning a replacement sector from the spare sector area of another group and cannot be accomplished until the other group has been certified. This is due to the fact that the next available spare sector is not known until its group is certified, i.e. the Slipping Algorithm has been applied.

18.3.1.2.2 Linear Replacement Algorithm

The Linear Replacement Algorithm is used to handle defective sectors found after certification. It is also used during certification in the event of the spare area of a group becoming exhausted.

The defective sector shall be replaced by the first available good spare sector of the group. If there are no spare sectors left in the group, the defective sector shall be replaced by the first good spare sector of another group. The addresses of the defective sector and of the replacement sector shall be recorded in the SDL.

The addresses of sectors already recorded in the PDL shall not be recorded in the SDL.

If a replacement sector listed in the SDL is later found to be defective, it shall be dealt with by making a new entry in the SDL indicating a replacement sector for that defective sector.

18.3.1.3 Disks not certified

The Linear Replacement Algorithm is also used to handle sectors found defective on disks which have not been certified.

A defective sector shall be replaced by the first available good spare sector of the group. If there are no spare sectors left in the group, the defective sector shall be replaced by the first good spare sector of another group. The addresses of the defective sector and of the replacement sector shall be recorded in the SDL.

18.3.1.4 Write procedure

When writing data in the sectors of a group, a defective sector listed in the PDL shall be skipped, and the data shall be written in the next data sector, according to the Slipping Algorithm. If a sector to be written is listed in the SDL, the data shall be written in the spare sector pointed to by the SDL, according to the Linear Replacement Algorithm.

For cartridges of Type WO, after media initialization, all sectors in the Write Once Zone are in the erased state. Erasing of sectors in the Write Once Zone after initialization is not permitted. Before writing a sector in the Write Once Zone, it shall be determined whether or not the sector has been written. If the sector has been written, a write operation is not permitted. During write operations, sectors shall always be recorded with CRC, ECC, and the 12 (FF) bytes as specified by this International Standard (see annex N). Defective sectors in the Write Once Zone shall be dealt with according to the defect management method specified in this International Standard. A replacement sector listed in the SDL shall contain the user data of the sector it replaces.

Copyright International Organization for Standardization
Provided by IHS under license with ISO
No reproduction or networking permitted without license from IHS
Not for Resale

18.3.1.5 Primary Defect List

A PDL shall always be recorded; it may be empty.

A list of defective sectors may be obtained by means other than certification of the disk.

The PDL shall contain the addresses of all defective sectors identified at initialization. The addresses shall be listed in ascending order. The PDL shall be recorded in the minimum number of sectors necessary, and it shall begin in the first user data byte of the first sector. All unused bytes of the last sector of the PDL shall be set to (FF). The information in table 12 shall be recorded in each of the PDLs.

In an empty PDL, bytes 2 and 3 shall be set to (00) and bytes 4 to 7 shall be set to (FF).

Table 12 - Content of the PDL

Byte	Contents
0	(00), PDL Identifier
1	(01), PDL Identifier
2	Number of Addresses in the PDL, MSB (Each entry is 4 bytes long)
3	Number of Addresses in the PDL, LSB (If bytes 2 and 3 are (00), byte 3 is the end of the PDL)
4	Address of the First Defective Sector (Track Number, MSB)
5	Address of the First Defective Sector (Track Number)
6	Address of the First Defective Sector (Track Number, LSB)
7	Address of the First Defective Sector (Sector Number)
.	.
.	.
.	.
n-3	Address of the Last Defective Sector (Track Number, MSB)
n-2	Address of the Last Defective Sector (Track Number)
n-1	Address of the Last Defective Sector (Track Number, LSB)
n	Address of the Last Defective Sector (Sector Number)

18.3.1.6 Secondary Defect List

The Secondary Defect List (SDL) is created during initialization and used during and after certification. All disks with a Rewritable Zone or a Write Once Zone shall have an SDL recorded during initialization.

The list of addresses shall contain the addresses of the defective sectors and their replacement sectors. The addresses of the defective sectors shall be in ascending order.

The SDL shall be recorded in the minimum number of sectors necessary, and it shall begin in the first User Data byte of the first sector. All unused bytes of the last sector of the SDL shall be set to (FF). The information in table 13 shall be recorded in each of the four SDLs.

The addresses of sectors already recorded in the PDL shall not be recorded in the SDL.

If a replacement sector listed in the SDL is later found to be defective, it shall be dealt with by making a new entry in the SDL indicating a replacement sector for that defective sector.

Copyright International Organization for Standardization
Provided by IHS under license with ISO
No reproduction or networking permitted without license from IHS
Not for Resale

Table 13 - Content of the SDL

Byte	Contents
0	(00), SDL Identifier
1	(02), SDL Identifier
2	Number of Addresses in the SDL, MSB (Each entry is 8 bytes long)
3	Number of Addresses in the SDL, LSB (If bytes 2 and 3 are set to (00), byte 3 is the end of the SDL)
4	Address of the First Defective Sector (Track Number, MSB)
5	Address of the First Defective Sector (Track Number)
6	Address of the First Defective Sector (Track Number, LSB)
7	Address of the First Defective Sector (Sector Number)
8	Address of the First Replacement Sector (Track Number, MSB)
9	Address of the First Replacement Sector (Track Number)
10	Address of the First Replacement Sector (Track Number, LSB)
11	Address of the First Replacement Sector (Sector Number)
.	.
.	.
.	.
n-7	Address of the Last Defective Sector (Track Number, MSB)
n-6	Address of the Last Defective Sector (Track Number)
n-5	Address of the Last Defective Sector (Track Number, LSB)
n-4	Address of the Last Defective Sector (Sector Number)
n-3	Address of the Last Replacement Sector (Track Number, MSB)
n-2	Address of the Last Replacement Sector (Track Number)
n-1	Address of the Last Replacement Sector (Track Number, LSB)
n	Address of the Last Replacement Sector (Sector Number)

18.3.2 Embossed groups: Parity sectors

The embossed parity sectors provide an error correction system for embossed data in addition to the ECC over the Data field and the control bytes of each sector. They allow the drive to correct one sector on a track that cannot be corrected by the ECC, assuring a high data integrity. If more than one sector on a track cannot be corrected by ECC, then it is not possible to recover any of these defective sectors by the use of parity sectors.

The Data field of a parity sector contains 1 036/524 parity bytes (PB) for 1 024/512 user byte sectors, calculated as an Exclusive OR (⊕) over the data and control bytes (DB), of the sectors on a data track.

The algorithm shall be

$$PB_{T,n} = DB_{t,0,n} \oplus DB_{t,1,n} \oplus \ldots DB_{t,j,n} \oplus \ldots \oplus DB_{t,16/30,n}$$

where:

$1 \le t \le$ Number of embossed data sectors (17 or 31)
$0 \le j \le 16$ or 30
$1 \le n \le 1\,036$ or 524 for 1 024 or 512 user bytes, respectively.

$PB_{T,n}$ is byte A_n of parity sector T, and $DB_{t,j,n}$ is byte A_n of sector j on track t of the group. A_n is defined in annex D. The parity bytes are calculated over the User Data bytes and control bytes, excluding the Resync bytes. The CRC, ECC, and Resync bytes as defined in annex D shall be required with each parity sector.

The parity sectors for each track of the group shall be stored consecutively in the sectors allocated to them in each group, starting with the first sector. The first parity sector of a group is associated with the first data track of the same group, the second parity sector is associated with the second data track, and so on until all data tracks have an associated parity sector. The contents of the data field of the unused parity sectors shall be set to (FF) and shall contain data complying with the layout as given in annex D.

Copyright International Organization for Standardization
Provided by IHS under license with ISO
No reproduction or networking permitted without license from IHS
Not for Resale

Section 5 - Characteristics of User Data

19 Minimum quality of a sector

This clause specifies the minimum quality of the Header and Recording field of a sector as required for the interchange of the data contained in that sector. The quality shall be measured on the Reference Drive specified.

A byte error occurs when one or more bits in a byte have a wrong setting, as detected by the ECC and/or CRC.

19.1 Headers

19.1.1 Sector Mark

At least three of the five long marks of the Sector Mark shall have the timing specified in 17.2.1 and the signals shall have the amplitude specified in 15.4.2.

19.1.2 ID fields

At least one of the three ID fields in a Header read in Channel 1 shall not have any byte errors, as checked by the CRC in the field.

NOTE 5 - This involves correct capture of the data clock on the preceding VFO_1 or VFO_2 field and correct byte synchronization on the preceding Address Mark.

19.2 User-written data

The user-written data in a sector as read in Channel 2 shall not contain any byte errors that cannot be corrected by the error correction defined in D.3 of annex D.

NOTE 6 - This involves correct capture of the data clock on the preceding VFO_3 Field and correct byte synchronization on the preceding data Sync.

19.3 Embossed data

The embossed data in a sector as read in Channel 1 shall not contain any byte errors that cannot be corrected by the error correction defined in 18.3.2.

NOTE 7 - This involves correct capture of the data clock on the preceding VFO_3 Field and correct byte synchronization of the preceding data Sync.

20 Data interchange requirements

A disk offered for interchange of data shall comply with the following requirements.

20.1 Tracking

The focus of the optical beam shall not jump tracks unintentionally.

20.2 User-written data

Any sector written in the Rewritable Zone that does not comply with 19.1 and 19.2 shall have been replaced according to the rules of the defect management as defined in 18.3.1.

20.3 Embossed data

Any sector in the Embossed Zone that does not comply with 19.3 shall be correctable by the error correction based on the Parity sectors as defined in 18.3.2.

20.4 Quality of the disk

The quality of the disk is reflected in the number of replaced sectors in the Rewritable Zone. This Standard allows a maximum of 2 077 replacement sectors for 512-byte sectors and 2 057 replacement sectors for 1 024-byte sectors. The maximum number acceptable to a user remains a matter of agreement between purchaser and supplier.

Copyright International Organization for Standardization
Provided by IHS under license with ISO
No reproduction or networking permitted without license from IHS
Not for Resale

Annex A
(normative)

Air cleanliness class 100 000

The classification of air cleanliness is based on a particle count with a maximum allowable number of specified minimum sized particles per unit volume, and on a statistical average particle size distribution.

A.1 Definition

The particle count shall not exceed a total of 3 500 000 particles per cubic metre of a size 0,5 µm and larger.

The statistical average particle size distribution is given in figure A.1. Class 100 000 means that 3 500 000 particles per cubic metre of a size of 0,5 µm and larger are allowed, but only 25 000 particles per cubic metre of a size of 5,0 µm and larger.

It should be recognized that single ample distribution may deviate from this curve because of local or temporary conditions. Counts below 350 000 particles per cubic metre are unreliable except when a large number of samplings is taken.

A.2 Test method

For particles of sizes of the 0,5 µm to 5,0 µm, equipment employing light-scattering principles shall be used. The air in the controlled environment is sampled at a known flow rate. Particles contained in the sampled air are passed through an illuminated sensing zone in the optical chamber of the instrument. Light scattered by individual particles is received by a photo detector which converts the light pulses into electrical current pulses. An electronic system relates the pulse height to particle size and counts the pulses such that the number of particles in relation to particle size is registered or displayed.

Copyright International Organization for Standardization
Provided by IHS under license with ISO
No reproduction or networking permitted without license from IHS
Not for Resale

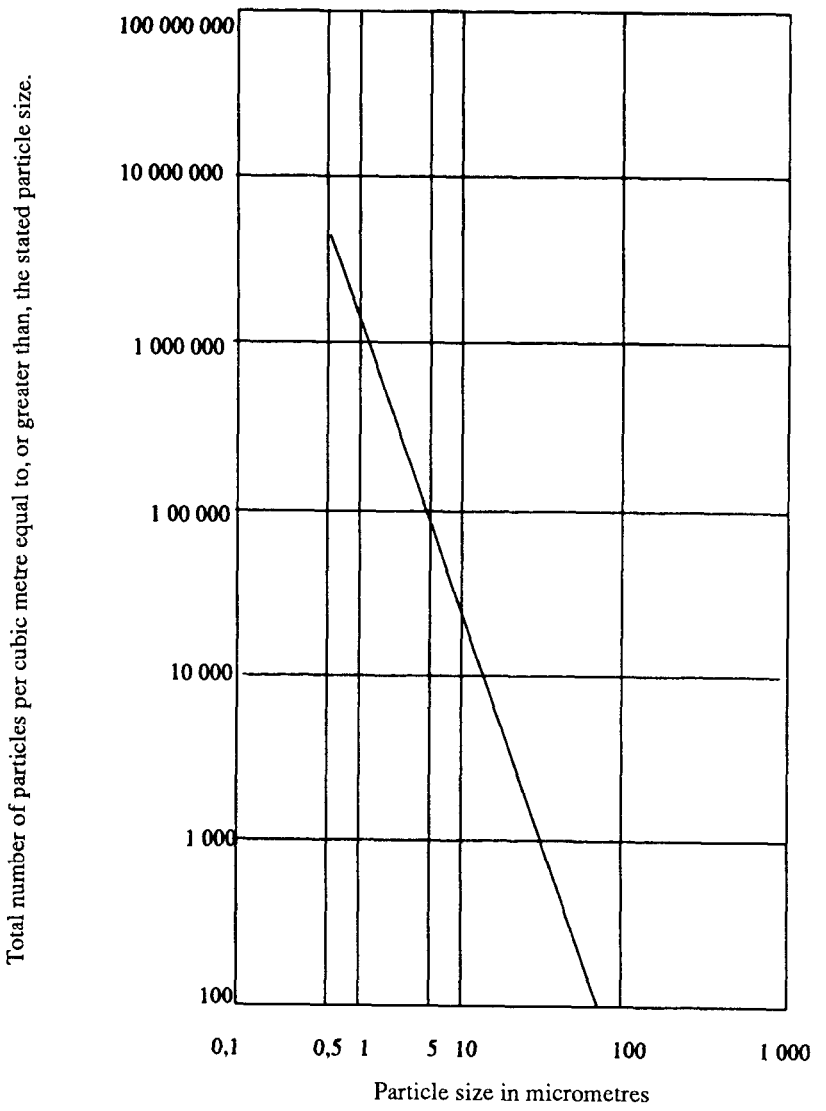

Figure A.1 - Particle size distribution curve

Copyright International Organization for Standardization
Provided by IHS under license with ISO
No reproduction or networking permitted without license from IHS
Not for Resale

Annex B
(normative)

CRC for ID fields

The sixteen bits of the CRC shall be computed over the first three bytes of the ID field. The generator polynomial shall be

$$G(x) = x^{16} + x^{12} + x^5 + 1$$

The residual polynomial shall be

$$R(x) = \left(\sum_{i=8}^{i=23} \overline{a}_i x^i + \sum_{i=0}^{i=7} a_i x^i \right) x^{16} \bmod G(x)$$

where a_i denotes a bit of the first three bytes and $\overline{a}_i$ an inverted bit. The highest order bit of the first byte is a_{23}.

The sixteen bits C_k of the CRC are defined by

$$R_c(x) = \sum_{k=0}^{k=15} C_k x^k$$

where C_{15} is recorded as the highest order bit of the fourth byte in the ID field.

Copyright International Organization for Standardization
Provided by IHS under license with ISO
No reproduction or networking permitted without license from IHS
Not for Resale

Annex C
(normative)

Definition of write pulse width

The rise and fall times T_r and T_f shall be less than 15 ns when the pulse width T_p exceeds 100 ns. They shall each be less than (0,1 T_p + 5) when T_p is less than 100 ns.

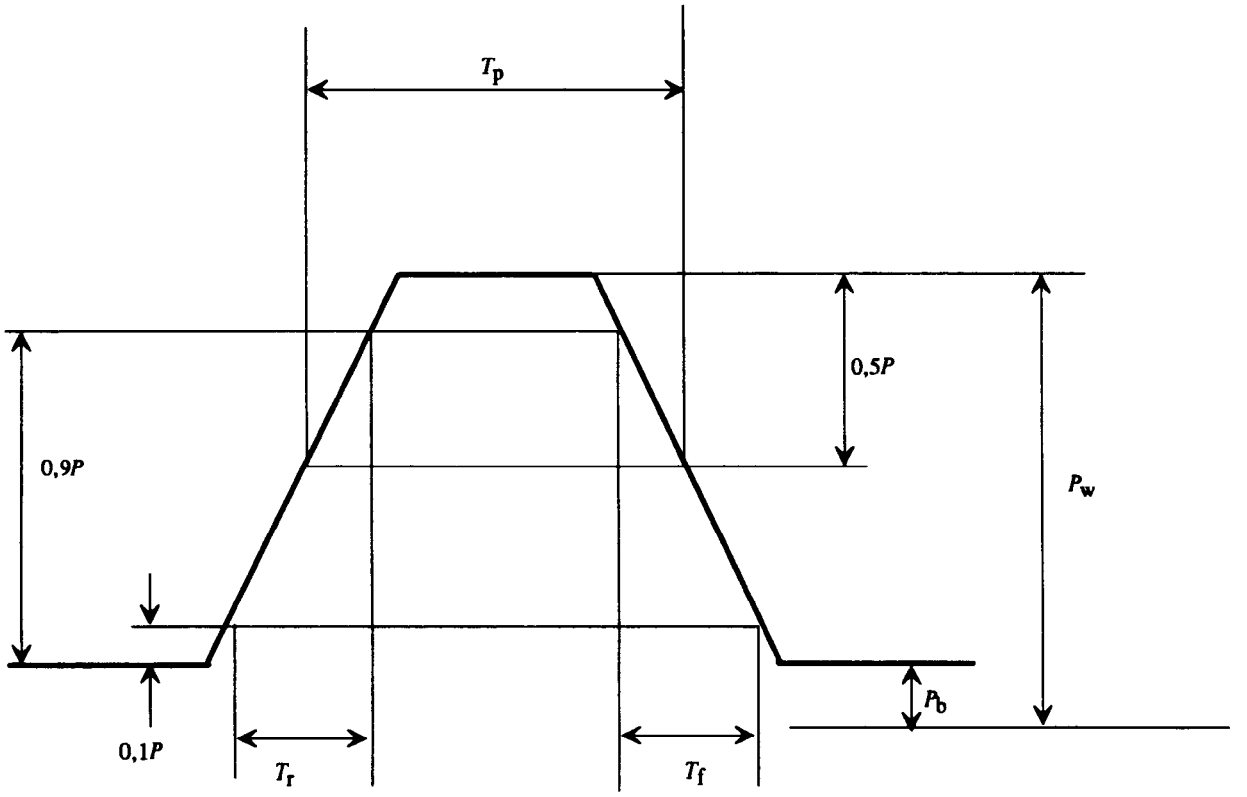

P_w : write power
P_b : bias power
T_r : rise time
T_f : fall time
T_p : write pulse width
P : P_w - P_b

Figure C.1 - Definition of the write pulse shape

Copyright International Organization for Standardization
Provided by IHS under license with ISO
No reproduction or networking permitted without license from IHS
Not for Resale

Annex D

(normative)

Interleave, CRC, ECC, Resync for the Data field

D.1 Interleave

D.1.1 Interleave for 1024-byte sectors

The different bytes shall be designated as follows:

D_n	are User Data bytes
$P_{h,m}$	are the twelve (FF) bytes
C_k	are CRC check bytes
$E_{s,t}$	are ECC check bytes

These bytes shall be ordered in a sequence A_n in the order in which they shall be recorded on the disk. This order is the same as that in which they are input into the controller. Depending on the value of n, these elements are:

for $1 \le n \le 1\,024 : A_n = D_n$

for $1\,025 \le n \le 1\,036 : A_n = P_{h,m}$

for $1\,037 \le n \le 1\,040 : A_n = C_k$

for $1\,041 \le n \le 1\,200 : A_n = E_{s,t}$

where:

$$h = int\left[n - \frac{1\,025}{4}\right] + 1$$

$$m = [\,(n - 1\,025) \bmod 4\,] + 1$$

$$k = n - 1036$$

$$s = [(n - 1\,041) \bmod 10] + 1$$

$$t = int\left[\frac{n-1041}{10}\right] + 1$$

The notation *int* [x] denotes the largest integer not greater than x.

The first three parts of A_n are 10-way interleaved by mapping them onto a two-dimensional matrix B_{ij} with 104 rows and 10 columns. Thus

for $1 \le n \le 1\,040 : B_{ij} = A_n$

where:

$$i = 103\text{-}int\left[\frac{n-1}{10}\right]$$

$$j = (n\text{-}1) \bmod 10$$

D.1.2 Interleave for 512-byte sectors

For 512-byte sectors the sequence of bytes shall be denoted by A'_n, the other notations shall be as specified in D.1.1. In addition the two (FF) bytes are shown as (FF).

for $1 \le n \le 512 : A'_n = D_n$

for $513 \le n \le 524 : A'_n = P_{h,m}$

Copyright International Organization for Standardization
Provided by IHS under license with ISO
No reproduction or networking permitted without license from IHS
Not for Resale

for $525 \le n \le 526 : A'_n = (FF)$

for $527 \le n \le 530 : A'_n = C_k$

for $531 \le n \le 610 : A'_n = E_{s,t}$

where:

$h = int\left[\frac{n-513}{4}\right] + 1$

$m = [(n - 513) \bmod 4] + 1$

$k = n - 526$

$s = [(n - 531) \bmod 5] + 1$

$t = int\left[\frac{n-531}{5}\right] + 1$

The first four parts of A'_n are 5-way interleaved by mapping them onto a two-dimensional matrix B'_{ij} with 106 rows and 5 columns. Thus:

for $1 \le n \le 530 : B_{ij} = A'_n$

where:

$i = 105\text{-}int\left[\frac{n-1}{5}\right]$

$j = (n - 1) \bmod 5$

D.2 CRC

D.2.1 General

The CRC and the ECC shall be computed over the Galois field based on the primitive polynomial

$$G_p(x) = x^8 + x^5 + x^3 + x^2 + 1$$

The generator polynomial for the CRC bytes shall be

$$G_C(x) = \prod_{i=136}^{i=139} (x + \alpha^i)$$

where the element $\alpha^i = (\beta^i)^{88}$, with ß being a primitive root of $G_p(x)$. The value of the n-th bit in a byte is the coefficient of the n-th power of β, where $0 \le n \le 7$, when ß is expressed on a polynomial basis.

D.2.2 CRC for 1 024-byte sectors

The four check bytes of the CRC shall be computed over the user data and the twelve (FF) bytes.

The information polynomial shall be

$$I_C(x) = \left[\sum_{i=1}^{i=103} \sum_{j=0}^{j=9} B_{ij} x^i\right] + \sum_{j=0}^{j=5} B_{0,j} x^0$$

The contents of the four check bytes C_k of the CRC are defined by the residual polynomial

$$R_c(x) = I_c(x)\, x^4 \mod G_c(x)$$

The storage locations for the coefficients of the polynomial are specified by

Copyright International Organization for Standardization
Provided by IHS under license with ISO
No reproduction or networking permitted without license from IHS
Not for Resale

$$R_c(x) = \sum_{k=1}^{k=4} C_k x^{4-k}$$

D.2.3 CRC for 512-byte sectors

The four check bytes of the CRC shall be computed over the user data, the twelve (FF) bytes and the two (FF) bytes. The information polynomial shall be

$$I'_c(x) = \left[\sum_{i=1}^{i=105} \sum_{j=0}^{j=4} B'_{ij} x^i \right] + B'_{0,0} x^0$$

The contents of the four CRC check bytes shall be calculated as specified in D.2.2, however using polynomial $I'_c(x)$.

D.3 ECC

The primitive polynomial $G_p(x)$ and the elements α^i and ß shall be as specified in D.2.1. The generator polynomial for the check bytes of the ECC shall be

$$G_E(x) = \prod_{i=120}^{i=135} (x + \alpha^i)$$

This polynomial is self-reciprocal. This property can be used to reduce the hardware size. The initial setting of the ECC register shall be all ZEROs. The bits of the computed check bytes shall be inverted before they are encoded into Channel bits.

D.3.1 ECC for 1024-byte sectors

The 160 check bytes of the ECC shall be computed over the user bytes, the twelve (FF) bytes and the CRC bytes. The corresponding ten information polynomials shall be

$$I_{Ej}(x) = \sum_{i=0}^{i=103} B_{ij} x^i$$

where $0 \le j \le 9$.

The contents of the 16 check bytes $E_{s,t}$ for each polynomial $I_{Ej}(x)$ are defined by the residual polynomial

$$R_{Ej}(x) = I_{Ej}(x)\, x^{16} \bmod G_E(x)$$

The storage locations for the coefficients of the polynomials are specified by

$$R_{Ej}(x) = \sum_{t=1}^{t=16} E_{j+1,t} x^{16-t}$$

D.3.2 ECC for 512-byte sectors

The 80 check bytes of the ECC shall be computed over the user data bytes, the twelve (FF) bytes, the two (FF) bytes and the CRC bytes. The corresponding 5 information polynomials shall be

$$I'_{Ej}(x) = \sum_{i=0}^{i=105} B'_{ij} x^i$$

where $0 \le j \le 4$.

the calculation of the 16 check bytes for each of the information polynomials $I_{Ej}(x)$ shall be carried out as specified in D.3.1.

Copyright International Organization for Standardization
Provided by IHS under license with ISO
No reproduction or networking permitted without license from IHS
Not for Resale

D.4 Resync

The Resync fields shall be inserted in the Data field to prevent loss of synchronization and to limit the propagation of errors in the user data. Whilst they are numbered consecutively all Resync fields are identical; they contain the following pattern of Channel bits

0010 0000 0010 0100

For 1 024-byte sectors, a field RSn shall be inserted between bytes A_{20n} and A_{20n+1},

where $1 \leq n \leq 59$.

For 512-byte sectors, a field RSn shall be inserted between bytes A_{15n} and A_{15n+1},

where $1 \leq n \leq 40$.

D.5 Recording sequence for the Data field

The elements of the Data field shall be recorded on the disk according to sequence A_n or A'_n, as applicable, immediately following the Sync bytes and with the Resync bytes inserted as specified in D.4.

Figures D.1 and D.2 show in matrix form the arrangement of these elements. The sequence of recording is from left-to-right and top-to-bottom.

SB	designates a Sync byte
D	designates a user byte
RS	designates a Resync byte
P	designates one of the twelve (FF) bytes
C	designates a check byte for CRC
E	designates a check byte for ECC
(FF)	designates an (FF) byte

For 1 024-byte sectors (figure D.1) the first 104 rows contain in columns 0 to 9 the user bytes, the twelve (FF) bytes and the CRC check bytes. The next 16 rows contain only the ECC check bytes.

For 512-byte sectors (figure D.2) the first 106 rows contain in columns 0 to 4 the user bytes, the twelve (FF) bytes, the two (FF) bytes and the CRC check bytes. The next 16 rows contain only the ECC check bytes.

Copyright International Organization for Standardization
Provided by IHS under license with ISO
No reproduction or networking permitted without license from IHS
Not for Resale

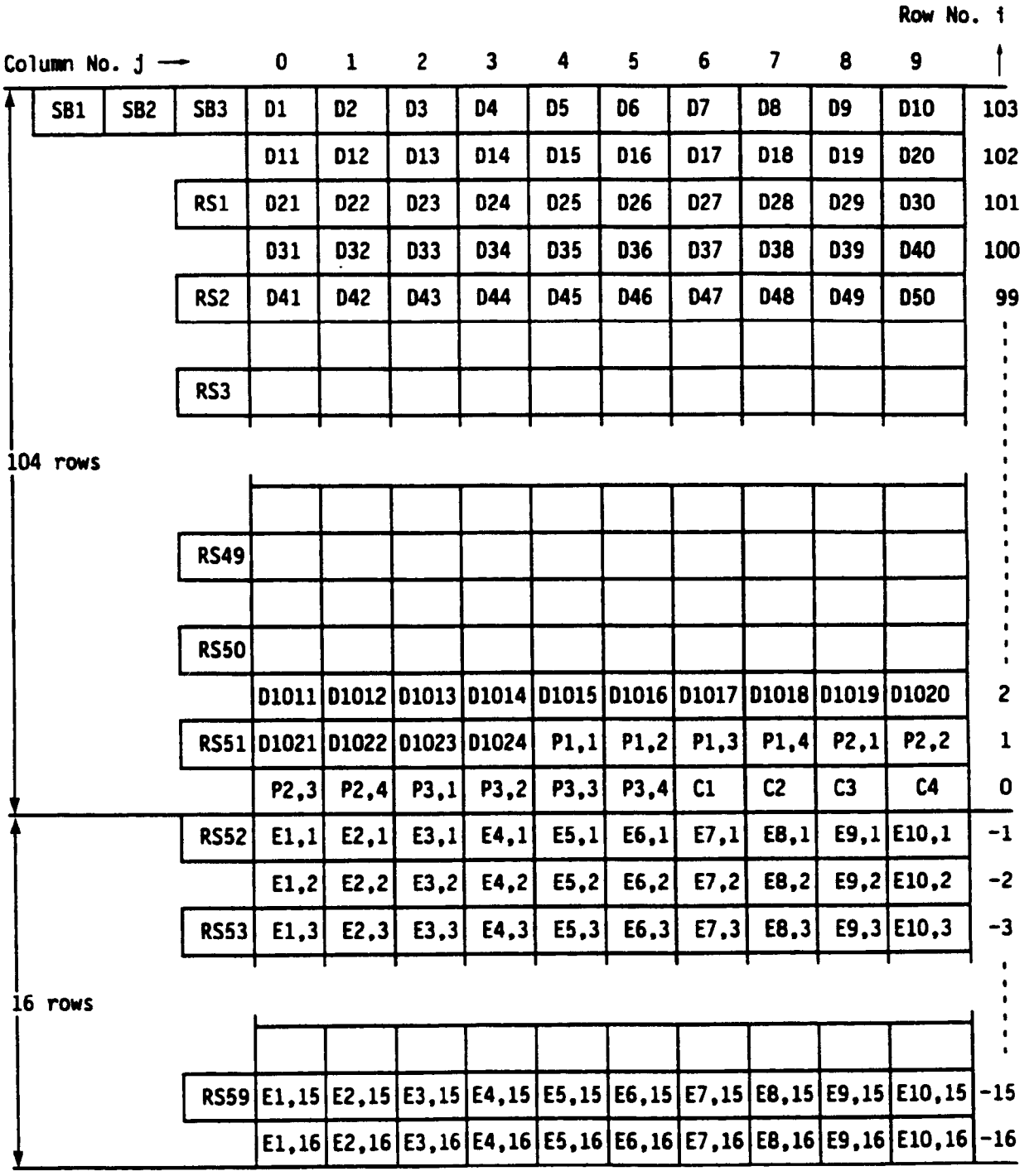

Figure D.1 - Data field configuration, 1024-byte sectors, ECC with 10-way interleave

Copyright International Organization for Standardization
Provided by IHS under license with ISO
No reproduction or networking permitted without license from IHS
Not for Resale

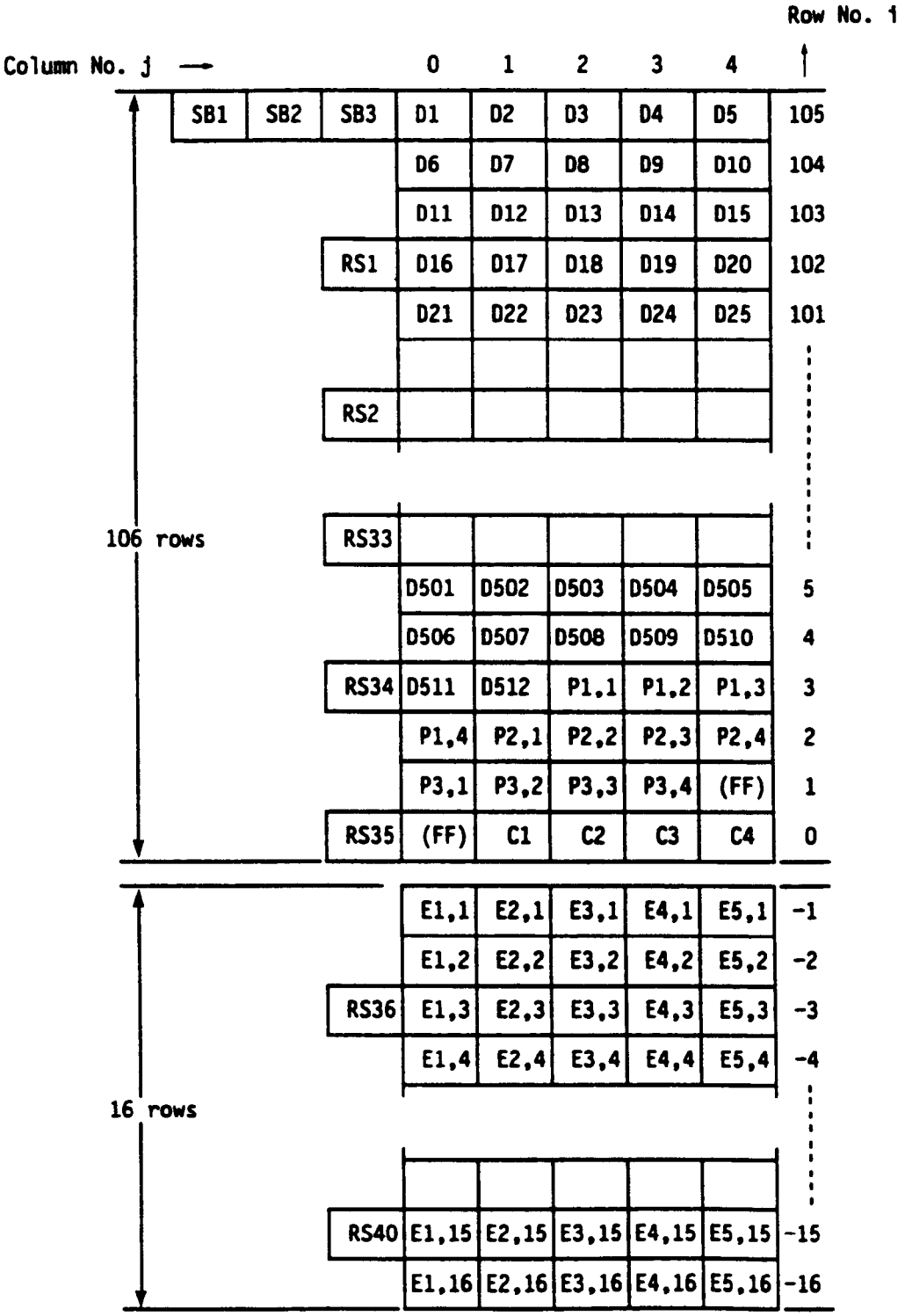

Figures D.2 - Data field configuration, 512-byte sectors, ECC with 5-way interleave

Copyright International Organization for Standardization
Provided by IHS under license with ISO
No reproduction or networking permitted without license from IHS
Not for Resale

Annex E
(normative)

Measurement of the figure of merit

E.1 Description

The figure of merit enables a drive designer to determine the amplitude of the signal in Channel 2 of the drive from magneto-optical marks recorded on the disk at a low spatial frequency in both the radial and tangential direction.

Determination of the figure of merit using a drive as the Reference Drive specified in clause 9 will not measure media properties only but also the optical retardation of the optical system of the drive. Therefore, a calibration of the drive is needed with a conventional determination of the figure of merit by measuring the reflectance, Kerr rotation and ellipticity. This calibration can only be executed reliably on media with low coercivity.

E.2 Calibration

The drive shall be calibrated as follows. A test disk with negligible birefringence, e.g. a glass disk, and a low-coercivity magneto-optical layer is used for a conventional determination of the reflectance R , the Kerr rotation θ of the polarization between both opposite states of magnetization of the layer, and the Kerr ellipticity ß. The figure of merit of the media is then

$$F_L = \mathrm{R} \sin\theta \cos 2\beta$$

A low-frequency test pattern is written on the same disk. The written domains shall be substantially larger than the focal spot, so as to work in the low spatial frequency region where the modulation transfer function of the optical system is one. This implies that for a disk rotating at 30 Hz, a pattern of long domains with a frequency lower than 100 kHz has to be written on several consecutive tracks, while keeping the marks in neighbouring tracks radially aligned and overlapping.

The pattern is read with the drive to be calibrated. The resulting peak-to-peak amplitude V_L of the signal in Channel 2 of the drive is the required calibration constant for this drive.

E.3 Calculation

The figure of merit of any low- or high-coercivity disk can now be determined on the calibrated drive by writing the above test pattern and reading the peak-to-peak amplitude V of the signal in Channel 2. The figure of merit F of this disk is then

$$F = F_L \frac{V}{V_L}$$

Copyright International Organization for Standardization
Provided by IHS under license with ISO
No reproduction or networking permitted without license from IHS
Not for Resale

Annex F

(normative)

Test method for measuring the adsorbent force of the hub

F.1 General

The purpose of this test is to determine the magnetic characteristics of the magnetizable material of the media hub.

F.2 Dimensions

The test device (see figure F.1) consists of a spacer, a magnet, a back yoke and a centre shaft. The dimension of the test device are as follows:

D_d = 8,0 mm ± 0,1 mm
D_e = 20,0 mm ± 0,1 mm
D_f = 19,0 mm max.

$D_g = 3{,}9\ \text{mm}\ {}^{+\,0{,}0\ \text{mm}}_{-\,0{,}1\ \text{mm}}$

H_c = 0,40 mm ± 0,01 mm
H_d = 1,2 mm, (typical, to be adjusted to meet the force requirement of F.4)

F.3 Material

The material of the test device shall be

Magnet:	Any magnetic material, typically Sm-Co
Back yoke:	Any suitable magnetizable material
Spacer:	Non-magnetizable material or air gap
Centre shaft:	Non-magnetizable material

F.4 Characteristics of the magnet with back yoke

Number of poles : 4 (typical)
Max. energy product (BH_{max}) : 175 kJ/m^3 ± 16 kJ/m^3 (typical)

F.5 Test conditions for temperature

These conditions shall be as specified in 8.1.1.

F.6 Procedure

The characteristics of the magnet with back yoke shall be adjusted so that with a pure nickel plate of the following dimensions (figure F.2), the adsorbent force of this plate at the point of H_c = 0,4 mm when spaced from the magnet surface shall be 9,5 N ± 0,6 N.

D_h = 7,0 mm ± 0,1 mm
D_i = 22,0 mm ± 0,1 mm
H_e = 2,00 mm ± 0,05 mm

Copyright International Organization for Standardization
Provided by IHS under license with ISO
No reproduction or networking permitted without license from IHS
Not for Resale

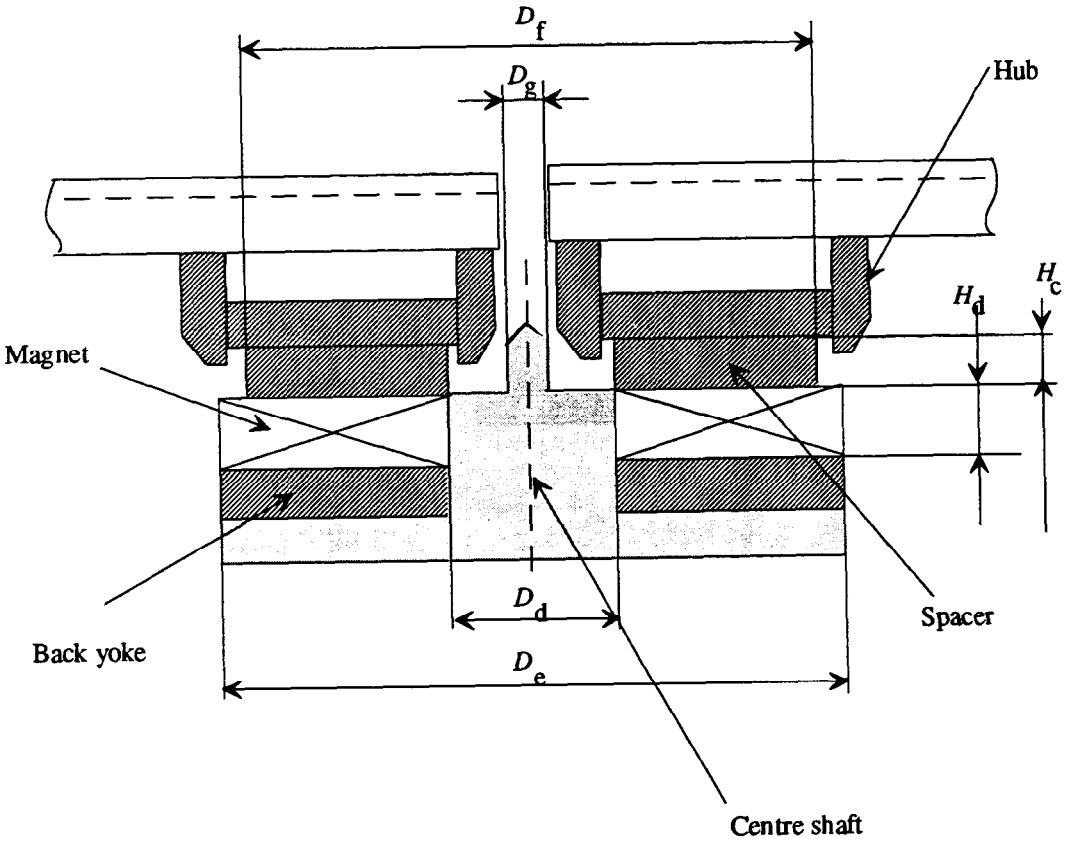

Figure F.1 - Test device for the clamping characteristic of the hub

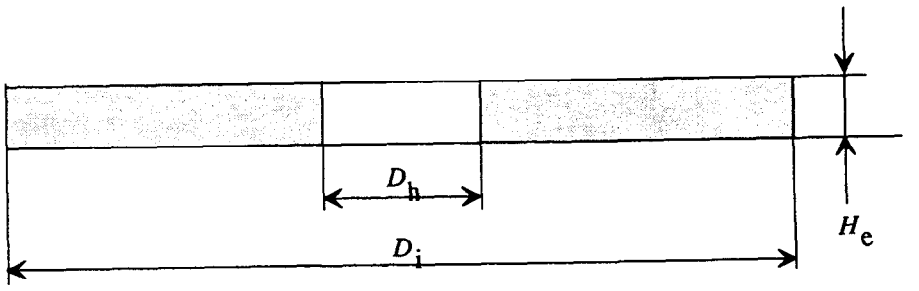

Figure F.2 - Calibration plate of the test device

Copyright International Organization for Standardization
Provided by IHS under license with ISO
No reproduction or networking permitted without license from IHS
Not for Resale

Annex G

(informative)

Office environment

Due to their construction and mode of operation optical disk cartridges have considerable resistance to the effects of dust particles around and inside the disk drive. Consequently it is not generally necessary to take special precautions to maintain a sufficiently low concentration of dust particles.

Operation in heavy concentrations of dust should be avoided e.g. in a machine shop or on a building site.

Office environment implies an environment in which personnel may spend a full working day without protection and without suffering temporary or permanent discomfort.

Annex H

(informative)

Derivation of the operating climatic environment

This annex gives some background on how some of the conditions of the operating environment in 8.1.2 have been derived.

H.1 Standard climatic environment classes

The conditions of the ODC operating environment are, with a few exceptions mentioned below, based on parameter values of the IEC standard climatic environment class 3K3 described in IEC publication 721-3-3:1987 [1)]. This publication defines environmental classes for stationary use of equipment at weather-protected locations.

The IEC class 3K3 refers to climatic conditions which

"may be found in normal living or working areas, e.g. living rooms, rooms for general use (theatres, restaurants, etc.), offices, shops, workshops for electronic assemblies and other electrotechnical products, telecommunication centres, storage rooms for valuable and sensitive products."

H.2 Overtemperature considerations

While IEC class 3K3 defines the limits for the room climate only, the ODC operating environment specification in this International Standard takes into consideration also system and drive overtemperature. This means that when inserted in a drive, the ODC will sense a temperature which is above the ambient room temperature. The figures in the operating environment specification have been calculated from the assumption that this overtemperature may be up to 20°C.

1) Classification of environmental conditions - Part 3: Classification of groups of environmental parameters and their severities. Stationary use at weather-protected locations.

Copyright International Organization for Standardization
Provided by IHS under license with ISO
No reproduction or networking permitted without license from IHS
Not for Resale

H.3 Absolute humidity

The introduction of the parameter

absolute humidity [unit: g of water per cubic metre of air]

is very useful when studying overtemperature. When the temperature rises inside a drive, the relative humidity goes down but the absolute humidity remains substantially constant. So, making room for overtemperature in the operating environment specification affects not only the upper temperature limit but also the lower relative humidity limit. The relationship between these parameters is shown in the climatogram (the relative humidity vs. temperature map) of the ODC operating environment, figure H.1.

The absolute humidity restrictions influence the operating environment in the following ways:

a) Combinations of high temperatures and high relative humidities are excluded. Such combinations could have negative influence on the performance and the life of ODC's.

b) Combinations of low temperatures and low relative humidities are excluded. Such combinations are very unlikely to occur in world-wide normal office environments.

H.4 Deviations from the IEC standard environment class

Apart from the changes introduced by the overtemperature considerations mentioned above, there are a few more parameter values which are not based on IEC class 3K3. These are

– atmospheric pressure

The IEC 3K3 lower limit of 70 kPa has been extended to 60 kPa. ODCs show no intrinsic pressure sensitivity and 70 kPa excludes some possible markets for ODCs.

– absolute humidity

The IEC 3K3 value for the upper limit of 25 g/m^3 has been raised to 30 g/m^3 in view of some expected operation in portable devices outside the controlled office environment.

– temperature

The maximum temperature around the ODC, i.e. room temperature plus overtemperature, had been limited to 55°C (while IEC 3K3 + 20°C would have become 60°C). For ODCs according to this International Standard, however, the 55°C limit is considered to be a physical limit above which operation (as well as storage) is not safe.

This means that equipment designers may want to ensure adequate cooling inside the drive especially when the room temperature approaches the upper IEC 3K3 limit of 40°C.

– further

The rates of change (the gradients) of temperature and relative humidity are not according to IEC 3K3.

H.5 Wet bulb temperature specifications

Instead of specifying limits for the absolute humidity, earlier standards for ODCs as well as those for other digital data storage media often used restrictions of the parameter

wet bulb temperature [unit: degree Celsius]

in order to avoid too severe combinations of high temperatures and high relative humidities.

In order to facilitate comparisons between different specifications, figure H.2 shows wet bulb temperatures of interest for the ODC operating environment, as well as for the testing and storage environments. Since wet bulb temperatures vary slightly with the atmospheric pressure, the diagram is valid for the normal pressure of 101,3 kPa.

Copyright International Organization for Standardization
Provided by IHS under license with ISO
No reproduction or networking permitted without license from IHS
Not for Resale

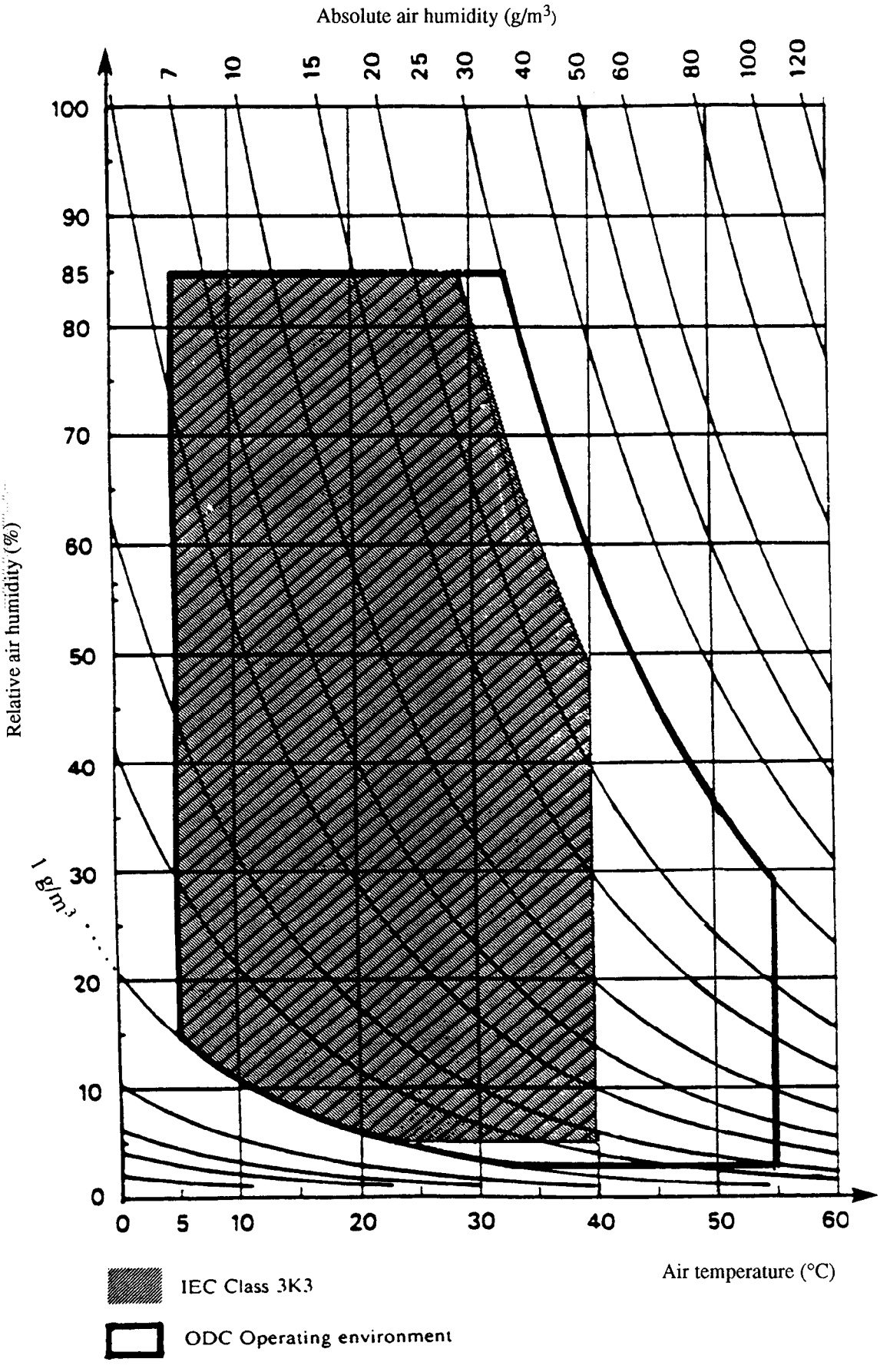

Figure H.1 - Climatogram of IEC Class 3K3 and the ODC operating environment

Copyright International Organization for Standardization
Provided by IHS under license with ISO
No reproduction or networking permitted without license from IHS
Not for Resale

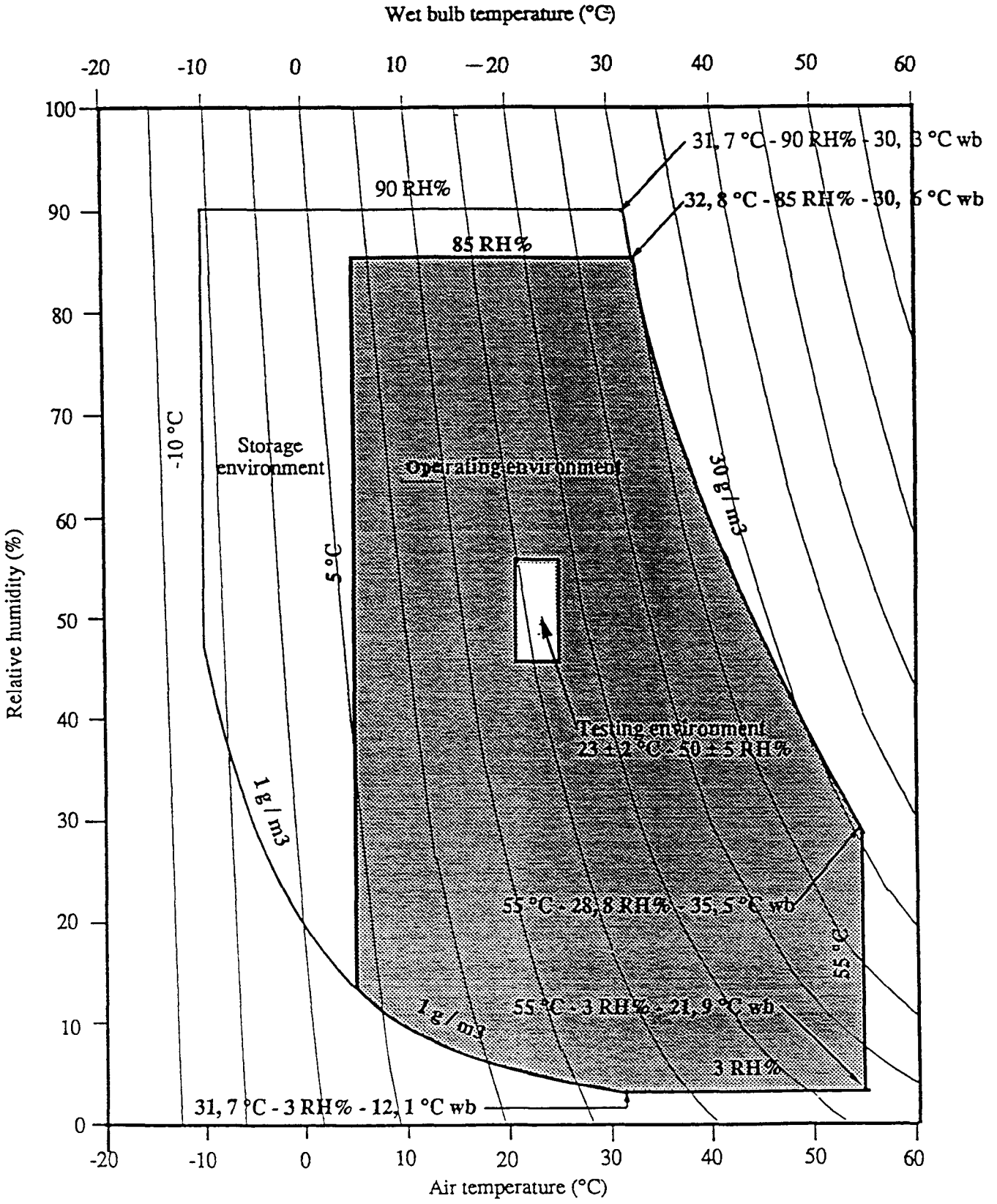

Note - Temperature(°C) - Relative humidity(RH%) - Wet bulb temperature(°C wb)

Figure H.2 - Wet bulb temperatures of the operating and storage environments at 101,3 kPa

Copyright International Organization for Standardization
Provided by IHS under license with ISO
No reproduction or networking permitted without license from IHS
Not for Resale

Annex J
(informative)

Transportation

J.1 General

As transportation occurs under a wide range of temperature and humidity variations, for differing periods, by many methods of transport and in all parts of the world it is not possible to specify conditions for transportation or for packaging.

J.2 Packaging

The form of packaging should be agreed between sender and recipient or, in the absence of such agreement, is the responsibility of the sender. it should take account of the following hazards.

J.2.1 Temperature and humidity

Insulation and wrapping should be designed to maintain the conditions for storage over the estimated period of transportation.

J.2.2 Impact loads and vibration

a) Avoid mechanical loads that would distort the shape of the cartridge.

b) Avoid dropping the cartridge.

c) Cartridges should be packed in a rigid box containing adequate shock absorbent material.

d) The final box should have a clean interior and a construction that provide sealing to prevent the ingress of dirt and moisture.

Annex K
(informative)

Track deviation measurement

The deviation of a track from its nominal location is measured in the same way as a drive sees a track, i.e. through a tracking servo. The strength of the reference servo used for the test is in general less than the strength of the same servo in a normal drive. The difference in strength is intended for margins in the drive. The deviation of the track is related to the tracking error between the track and the focus of the optical beam, remaining after the reference servo. The tracking error directly influences the performance of the drive, and is the best criterion for testing track deviations.

The specification of the axial and radial track deviations can be described in the same terms. Therefore, this annex applies to both axial and radial track deviations.

K.1 Relation between requirements

The acceleration required by the motor of the tracking servo to make the focus of the optical beam follow the tracks on the disk (see 11.6 and 11.8) is a measure for the allowed deviations of the tracks. An additional measure is the allowed tracking error between the focus and the track (see 15.1.2.3). The relation between both is given in figure K.1, where the maximum allowed amplitude of a sinusoidal track deviation is given as function of the frequency of the deviation. It is assumed in the figure that there is only one sinusoidal deviation present at a time.

Copyright International Organization for Standardization
Provided by IHS under license with ISO
No reproduction or networking permitted without license from IHS
Not for Resale

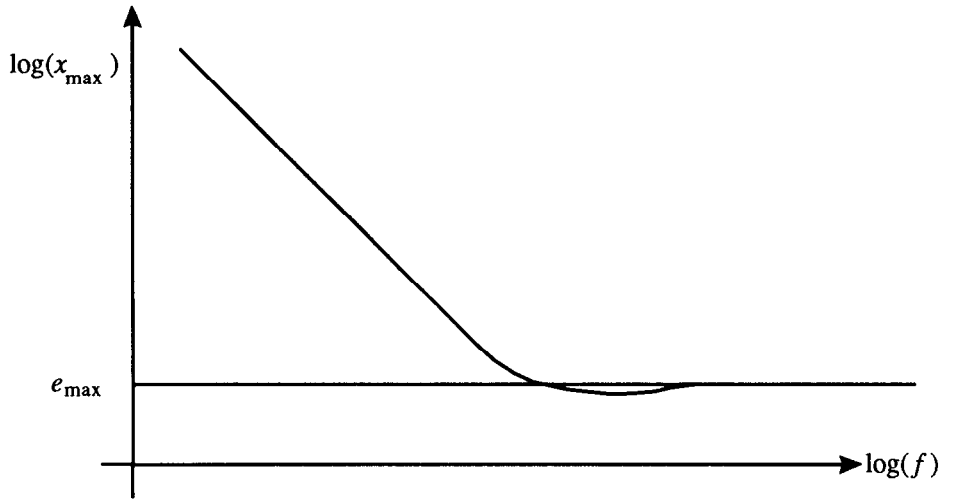

Figure K.1 - Maximum allowed amplitude of a single, sinusoidal track deviation

At low frequencies, the maximum allowed amplitude x_{max} is given by

$$x_{max} = a_{max} / (2\pi f)^2, \quad (1)$$

where a_{max} is the maximum acceleration of the servo motor. At high frequencies we have

$$x_{max} = e_{max} \quad (2)$$

where e_{max} is the maximum allowed tracking error. The connection between both frequency regions is given in clause K.3.

K.2 Reference Servo

The above restriction of the track deviations is equal to the restriction of the track deviations for a Reference Servo. A Reference Servo has a well-defined transfer function, and reduces a single, sinusoidal track deviation with amplitude x_{max} to a tracking error e_{max} as in figure K.1.

The open-loop transfer function of the Reference Servo shall be (3)

$$H_s(i\omega) = \frac{1}{c} \times \left(\frac{\omega_0}{i\omega}\right)^2 \times \frac{1 + \frac{i\omega c}{\omega_0}}{1 + \frac{i\omega}{c\omega_0}}$$

where

$i = \sqrt{-1}$;
$\omega = 2\pi f$ and;
$\omega_0 = 2\pi f_0$;

with f_0 the 0 dB frequency of the open-loop transfer function. The constant c gives the cross-over frequencies of the lead-lag network of the servo: the lead break frequency $f_1 = f_0 / c$ and the lag break frequency $f_2 = f_0 \times c$. The reduction of a track deviation x to a tracking error e by the reference servo is given by

$$\frac{e}{x} = \frac{1}{1 + H_s} \quad (4)$$

If the 0 dB frequency is specified as

$$\omega_0 = \sqrt{\frac{a_{max} c}{e_{max}}} \quad (5)$$

Copyright International Organization for Standardization
Provided by IHS under license with ISO
No reproduction or networking permitted without license from IHS
Not for Resale

then a low-frequency track deviation with an acceleration a_{max} will be reduced to a tracking error e_{max}, and a high-frequency track deviation will not be reduced. The curve in figure K.1 is given by

$$x_{max} = e_{max} \mid 1 + H_S \mid \quad (6)$$

The maximum acceleration required from the motor of this reference servo is

$$a_{max}(\text{motor}) = e_{max}\, \omega^2 \mid 1 + H_S \mid \quad (7)$$

At low frequencies ($f < f_0 / c$) applies

$$a_{max}(\text{motor}) = a_{max}(\text{track}) = \frac{\omega_0^2 e_{max}}{c} \quad (8)$$

Hence, it is permitted to use a_{max}(motor) as specified for low frequencies in 11.6 and 11.8 for the calculation of ω_0 of a reference servo.

K.3 Requirement for track deviations

The track deviations shall be such that, when tracking with a Reference Servo on a disk rotating at the specified frequency, the tracking error shall not be larger than e_{max} during more than 12 µs.

The open-loop transfer function of the Reference Servo for axial and radial tracking shall be given by equation (3) within an accuracy such that $|1 + H|$ does not differ by more than ± 20 % from its nominal value in a bandwidth from 30 Hz to 100 kHz. The constant c shall be 3. The 0 dB frequency $\omega_0 / (2\pi)$ shall be given by equation (5), where a_{max} and e_{max} for axial and radial tracking are specified in 11.6, 11.8 and 15.1.2.3.

K.4 Measurement implementation

Three possible implementations for an axial or radial measurement system have been given below. H_a is the open-loop transfer function of the actual tracking servo of the drive, H_s is the transfer function for the Reference Servo as given in equation (3). x and y are the position of the track and the focus of the optical beam. e_s is the tracking error after a Reference Servo, which signal has to be checked according to the previous paragraph.

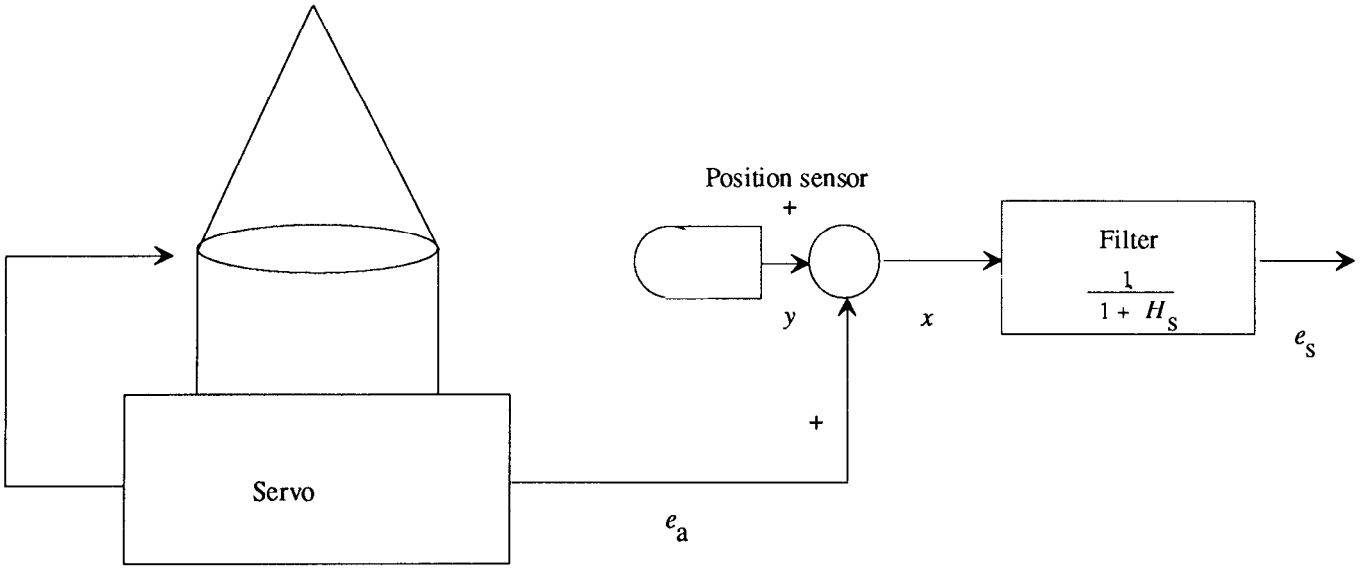

Figure K.2 - Implementation of a Reference Servo by filtering the track position signal with the reduction characteristics of the Reference Servo

Copyright International Organization for Standardization
Provided by IHS under license with ISO
No reproduction or networking permitted without license from IHS
Not for Resale

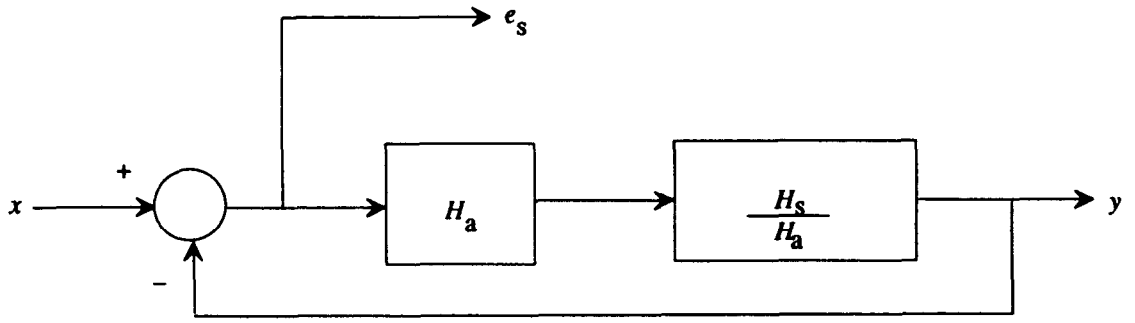

Figure K.3 - Implementation of a Reference Servo by changing the transfer function of the actual servo

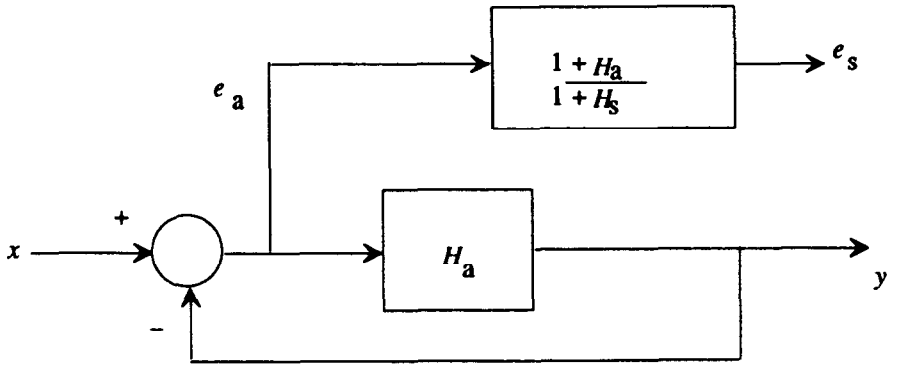

Figure K.4 - Implementation of a Reference Servo by changing the tracking error of the actual servo

The optimum implementation depends on the characteristics of H_a and H_s. Good results for motors in leaf springs are often obtained by using separate circuits in a low and high frequency channel. The implementation of figure K.2 is used in the low-frequency channel, while that of figures K.3 or K.4 is used in the high-frequency channel. The signals from both channels are added with a reversed cross-over filter to get the required tracking error. In the low-frequency channel one can also use the current through the motor as a measure of the acceleration of the motor, provided the latter is free from hysteresis. The current must be corrected for the transfer function of the motor and then be converted to a tracking error with a filter with a transfer function e/a, equivalent to equation (4).

Copyright International Organization for Standardization
Provided by IHS under license with ISO
No reproduction or networking permitted without license from IHS
Not for Resale

Annex L
(informative)

Read power, write power and erase power for 50 Hz operation

L.1 Read Power

The value of P_{max} for an additional rotational frequency is defined in the following table. The value contained in the control track may not exceed this value for the specific rotational frequency.

Rotational frequency	Maximum read power P_{max}
50 Hz	1,8 mW ≤ P_{max} ≤ 1,9 mW

L.2 Write power and erase power

The values of write power and erase power contained in the control tracks are described as the values at the temperature of 23 °C only and should not exceed the values for the following rotational frequency as follows:

Rotational Frequency	Maximum write power	
50 Hz	$P = 55\left(\frac{1}{T_w} + \frac{1}{\sqrt{T_w}}\right)$ mW	$T_w \leq 42$ ns
	$P = 9{,}8$ mW	$T_w > 42$ ns

Where P is the write power or erase power and T_w is the write pulse width.

The write power and erase power should be compensated for the temperature of the disk according to the formula:

$$P_1 = P_{23} - [0{,}003\ (T_{op} - 23)]$$

where P_1 is the compensated power, P_{23} the value described in control track, and T_{op} is the numeric value of the temperature of the disk.

L.3 Narrow-band signal-to-noise ratio

With the requirements specified in 15.3.5 and the following rotational frequency, the narrow-band signal-to-noise ratio shall be greater than the following value:

Rotational Frequency	Narrow-band SNR
50 Hz	46 dB

Copyright International Organization for Standardization
Provided by IHS under license with ISO
No reproduction or networking permitted without license from IHS
Not for Resale

Annex M

(informative)

Guidelines for sector retirement

This International Standard assumes that up to 2 077 sectors for disks with 512-byte sectors and up to 2 057 sectors for disks with 1 024-byte sectors may be replaced in any of the following cases:

a) A sector does not have at least two reliable Headers.

b) The Sector Mark is not readable.

c) A single defect of more than 30 bytes on a 1 024-byte per sector is detected (15 bytes on a 512-byte sector).

d) The total number of defective bytes exceeds 40 bytes in 1 024-byte sectors (15 bytes in a 512-byte sector), or 5 bytes in one ECC interleave of a 1 024-byte sector (3 bytes in a 512-byte sector).

e) For cartridges of Type WO, the total number of defective bytes in the twelve (FF) byte field exceeds 2.

Annex N

(informative)

Guidelines for the use of ODCs of Type WO

This annex lists some important points to be observed when using cartridges of Type WO specified by this International Standard.

a) Read the PEP and/or the SFP when the ODC is inserted into the drive to ascertain the media type, so as to enable and/or disable the appropriate host commands. If the drive is not intended to support this type of ODC, reject the disk with an appropriate error message and disallow any further operations on the disk.

b) Read the DDS when the disk is inserted into the drive to ascertain if the disk has been initialized. If it has, disallow re-initialization. If it has not been initialized, disallow access to the Write Once Zone.

c) Erase the Write Once Zone before initialization is complete. Record the DDSs only at the end of initialization to allow incomplete initializations to be detected.

   Before writing a sector, first determine whether or not it has been already written. This can be ascertained, for example, by inspecting the contents of the 12 (FF) bytes. If these are set to (FF), disallow writing the sector.

d) Disallow commands that can directly or indirectly alter written data such as: SCSI Erase, SCSI Reassign Blocks, SCSI Update Block.

e) Disallow the SCSI Write Long command. Always write user data with the twelve (FF) bytes, CRC, and ECC fields as specified by this International Standard.

Copyright International Organization for Standardization
Provided by IHS under license with ISO
No reproduction or networking permitted without license from IHS
Not for Resale

Annex P

(informative)

Measure of substrate vertical birefringence

Figure P.1 shows the experimental set-up, which uses a variable angle ellipsometer (VAE) to measure the phase retardation between orthogonal polarization states for a range of incident angles. The VAE is used in reflective mode for coated disks.

For reflective measurements, it is necessary to remove the top surface reflection, which causes no polarizaiton change but can have significant effect on light intensity, thereby causing distortion of retardation measurements of the beam that propagates through the substrate. This can be accomplished through use of a sufficiently thick glass flat placed on top of the disk (figure P.1) with an intervening film of either water or glycerol serving as an index matching fluid. The light collection optics can be aligned to sense only the beam which traversed the substrate. Since the glass has negligible birefringence, any phase retardation of the exiting beam is due primarily to the substrate, with a small contribution from film ellipticity. Since the beam passes through the disk twice, the retardation is doubled. It has been verified that neither index matching fluid has any significant effect on the disks nor the measurement process.

To vary the angle of incidence, the disk should be rotated in such a way that the plane of incidence remains the ϕ-z plane, assuming the disk to be described by cylindrical coordinates (r,ϕ,z). The widest possible range of incidence angles should be used, restricted only by limitations of the apparatus on the low angle side or beam walk-off on the high angle side. Angles ranging from -70° to $+70^{o}$ are recommended.

The phase retardation is measured as a function of angle of incidence. This measurement assumes that the principal optical axes of the substrate material are aligned with the cylindrical coordinates of the disk. In this situation, assuming the plane of incidence of the measurement beam is always the ϕ-z plane, the retardation can be expressed as

$$\Delta = dx\left(\sqrt{N_r^2 - \sin^2\theta} - \frac{N_\varphi}{N_z}\sqrt{N_z^2 - \sin^2\theta}\right)$$

where Δ is the retardation as a function of θ, the angle of incidence in air, and d is the substrate thickness.

Setting one member of the set of indices (N_r,N_φ,N_z) to a nominal value for the substrate material, the data are regression fit to the expression above. The vertical birefringence can then be obtained from the values (N_r,N_φ,N_z) found from the optimal fit to the data. The vertical birefringence is $SN_{vert} = N_\varphi - N_z$ and the measured value should conform to the requirement in 15.3.3.

Copyright International Organization for Standardization
Provided by IHS under license with ISO
No reproduction or networking permitted without license from IHS
Not for Resale

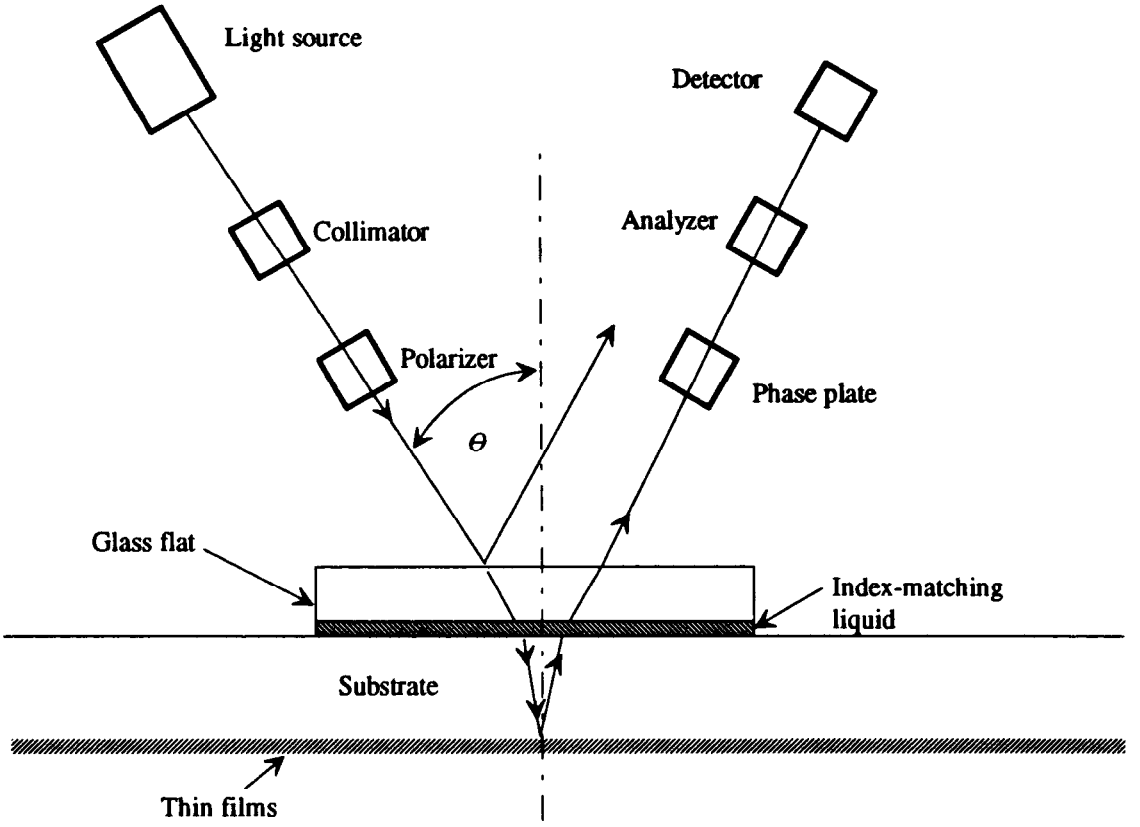

Figure P.1 - Ellipsometric set-up for vertical birefringence, the plane of incidence is φ-z plane (not to scale)

Copyright International Organization for Standardization
Provided by IHS under license with ISO
No reproduction or networking permitted without license from IHS
Not for Resale

UDC 681.327.68

Descriptors: data processing, information interchange, data recording, data recording devices, optical disks, optical disk cartridges, specifications, dimensions, physical properties, mechanical properties, optical properties, track formats, interchangeability.

Price based on 99 pages

Copyright International Organization for Standardization
Provided by IHS under license with ISO
No reproduction or networking permitted without license from IHS

Not for Resale