INTERNATIONAL STANDARD

ISO/IEC 13421

First edition
1993-12-15

Information technology — Data interchange on 12,7 mm, 48-track magnetic tape cartridges — DLT 1 format

Technologies de l'information — Échange de données sur cartouches pour bandes magnétiques de 12,7 mm, *48 pistes — Format DLT 1*



Reference number
ISO/IEC 13421:1993(E)

Copyright International Organization for Standardization
Provided by IHS under license with ISO
No reproduction or networking permitted without license from IHS

Not for Resale

Contents

		Page
Section 1 - General		1
1	Scope	1
2	Conformance	1
2.1	Magnetic tape cartridges	1
2.2	Generating systems	1
2.3	Receiving systems	1
3	References	1
4	Definitions	1
4.1	Average Signal Amplitude	2
4.2	azimuth	2
4.3	back surface	2
4.4	Beginning-Of-Tape marker (BOT)	2
4.5	byte	2
4.6	cartridge	2
4.7	Cyclic Redundancy Check (CRC) character	2
4.8	Early Warning (EW)	2
4.9	Error-Detecting Code (EDC)	2
4.10	End-Of-Tape marker (EOT)	2
4.11	Entity	2
4.12	Error-Correcting Code (ECC)	2
4.13	flux transition position	2
4.14	flux transition spacing	2
4.15	Logical Block	2
4.16	logical track	2
4.17	magnetic tape	2
4.18	Master Standard Reference Tape	3

© ISO/IEC 1993
All rights reserved. No part of this publication may be reproduced or utilized in any form or by any means, electronic or mechanical, including photocopying and microfilm, without permission in writing from the publisher.

ISO/IEC Copyright Office • Case postale 56 • CH-1211 Genève 20 • Switzerland

Printed in Switzerland

Copyright International Organization for Standardization
Provided by IHS under license with ISO
No reproduction or networking permitted without license from IHS
Not for Resale

4.19	object	**3**
4.20	physical block	**3**
4.21	physical recording density	
4.22	physical track	**3**
4.23	Record	**3**
4.24	Reference Edge	**3**
4.25	Reference Field	**3**
4.26	Secondary Standard Reference Tape	**3**
4.27	Standard Reference Amplitude (SRA)	**3**
4.28	Standard Reference Current	**3**
4.29	Test Recording Current	**3**
4.30	Typical Field	**3**
5	Conventions and notations	**3**
5.1	Representation of numbers	**3**
5.2	Names	**4**
5.3	Acronyms	**4**
6	Environment and safety	**4**
6.1	Cartridge and tape testing environment	**4**
6.2	Cartridge operating environment	**4**
6.3	Cartridge storage environment	**5**
6.4	Safety requirements	**5**
6.4.1	Safeness	**5**
6.4.2	Flammability	**5**
6.5	Transportation	**5**
Section 2 - Requirements for the unrecorded tape		**5**
7	Mechanical and electrical requirements	**5**
7.1	Material	**5**
7.2	Tape length	**5**
7.3	Width of the tape	**6**
7.4	Total thickness of the tape	**6**
7.5	Thickness of the base material	**6**
7.6	Thickness of the magnetic coating	**6**
7.7	Thickness of the back coating	**6**
7.8	Tape discontinuity	**6**
7.9	Longitudinal curvature	**6**
7.9.1	Requirement	**6**
7.9.2	Procedure	**6**
7.10	Out-of-Plane distortions	**6**
7.11	Cupping	**6**
7.12	Roughness of the coating surfaces	**7**

Copyright International Organization for Standardization
Provided by IHS under license with ISO
No reproduction or networking permitted without license from IHS
Not for Resale

7.12.1	Roughness of the back coating surface	7
7.12.2	Roughness of the magnetic coating surface	7
7.13	Coating adhesion	7
7.14	Layer-to-layer adhesion	8
7.14.1	Requirements	8
7.14.2	Procedure	8
7.15	Modulus of elasticity	9
7.15.1	Requirement	9
7.15.2	Procedure	9
7.16	Flexural rigidity	9
7.16.1	Requirement	9
7.16.2	Procedure	9
7.17	Tensile yield force	10
7.17.1	Procedure	10
7.18	Electrical resistance	10
7.18.1	Requirement	10
7.18.2	Procedure	10
7.19	Inhibitor tape	11
7.20	Abrasivity	11
7.20.1	Requirement	11
7.20.2	Procedure	11
7.21	Light transmittance of the tape and the leader	12
7.22	Coefficient of dynamic friction	12
7.22.1	Requirements	12
7.22.2	Procedure for the measurement of the friction between the magnetic surface and the back surface	12
7.22.3	Procedure for the measurement of the friction between the magnetic surface or the back surface and calcium titanate ceramic	13
8	Magnetic recording characteristics	13
8.1	Typical Field	13
8.2	Signal amplitude	14
8.3	Resolution	14
8.4	Overwrite	14
8.4.1	Requirement	14
8.5	Peak shift	14

Copyright International Organization for Standardization
Provided by IHS under license with ISO
No reproduction or networking permitted without license from IHS
Not for Resale

8.5.1	Requirement	**14**
8.5.2	Procedure	**14**
9	Tape quality	**15**
9.1	Missing pulses	**15**
9.1.1	Requirement	**15**
9.2	Missing pulse zone	**15**
9.2.1	Requirement	**15**
9.3	Tape durability	**15**
Section 3 - Mechanical specifications of the tape cartridge		**15**
10	General	**15**
10.1	Bottom side and right side	**16**
10.2	Back side and left side	**17**
10.3	Tape reel	**18**
10.4	Tape leader	**18**
10.5	Front side	**20**
10.6	Operation of the cartridge	**20**
10.7	Tape winding	**21**
10.8	Moment of inertia	**21**
10.9	Material	**21**
Section 4 - Requirements for an interchanged tape		**30**
11	Method of recording	**30**
11.1	Physical recording density	**30**
11.2	Bit cell length	**30**
11.2.1	Average bit cell length	**30**
11.2.2	Long-term average bit cell length	**30**
11.2.3	Short-term average bit cell length	**30**
11.3	Flux transition spacing	**30**
11.4	Read signal amplitude	**30**
11.5	Azimuth	**30**
11.6	Channel skew	**31**
12	Tape format	**31**
12.1	Reference Edge	**31**
12.2	Direction of recording	**31**
12.3	Tape layout	**31**
12.4	Calibration and Directory Area	**32**

Copyright International Organization for Standardization
Provided by IHS under license with ISO
No reproduction or networking permitted without license from IHS
Not for Resale

12.4.1	Scratch Area	32
12.4.2	Guard Area G1	32
12.4.3	Calibration Tracks Area	32
12.4.4	Guard Area G2	34
12.4.5	Directory Area	34
12.4.6	Guard Area G3	34
12.5	Data Area	34
12.5.1	Physical tracks	34
12.5.2	Width of the physical tracks	34
12.5.3	Logical tracks	34
12.5.4	Locations of the physical tracks	34
12.5.5	Layout of tracks in the Data Area	37
13	Data format	38
13.1	Data Bytes	38
13.2	Logical Blocks	38
13.3	Data Blocks	38
13.4	Types of Logical Blocks	39
13.5	Entities	39
13.6	Logical Block format	39
13.6.1	Preamble	40
13.6.2	Sync	40
13.6.3	Data Field	40
13.6.4	Control Field 1 (CF1)	41
13.6.5	Control Field 2 (CF2)	43
13.6.6	CRC	44
13.6.7	Postamble	44
14	Use of Logical Blocks	44
14.1	Data Blocks	44
14.2	Tape Mark Blocks	44
14.3	Filler Blocks	44
14.4	End of Track Blocks (EOTR)	45
14.5	End of Data Blocks (EOD)	45
14.6	ECC Blocks	45
15	Format of Entities	45
16	Error handling	45
Annexes		
A - Measurement of light transmittance		47
B - CRC generation		50

Copyright International Organization for Standardization
Provided by IHS under license with ISO
No reproduction or networking permitted without license from IHS
Not for Resale

C - ECC generation 51

D - Format of Control Field 54

E - Format of Control Field 2 55

F - Recommendations for transportation 56

G - Inhibitor tape 57

H - Recommendations on tape durability 57

J - Handling guidelines 58

Copyright International Organization for Standardization
Provided by IHS under license with ISO
No reproduction or networking permitted without license from IHS
Not for Resale

Foreword

ISO (the International Organization for Standardization) and IEC (the International Electrotechnical Commission) form the specialized system for worldwide standardization. National bodies that are members of ISO or IEC participate in the development of International Standards through technical committees established by the respective organization to deal with particular fields of technical activity. ISO and IEC technical committees collaborate in fields of mutual interest. Other international organizations, governmental and non-governmental, in liaison with ISO and IEC, also take part in the work.

In the field of information technology, ISO and IEC have established a joint technical committee ISO/IEC JTC 1. Draft International Standards adopted by the joint technical committee are circulated to national bodies for voting. Publication as an International Standard requires approval by at least 75% of the national bodies casting a vote.

International Standard ISO/IEC 13421 was prepared by the European Computer Manufacturers Association (ECMA) (as Standard ECMA-182) and was adopted, under a special "fast-track procedure", by Joint Technical Committee ISO/IEC JTC 1, *Information technology*, in parallel with its approval by national bodies of ISO and IEC.

Annexes A to E form an integral part of this International Standard. Annexes F to J are for information only.

Patents

During the preparation of the ECMA standard, information was gathered on patents upon which application of the standard might depend. Relevant patents were identified as belonging to Digital Equipment Corporation. However, neither ECMA nor ISO/IEC can give authoritative or comprehensive information about evidence, validity or scope of patent and like rights. The patent holders have stated that licences will be granted under reasonable and non-discriminatory terms. Communications on this subject should be addressed to

Digital Equipment Corporation
334 South Street
Shrewsbury
Massachusetts 01545-4112
USA

Copyright International Organization for Standardization
Provided by IHS under license with ISO
No reproduction or networking permitted without license from IHS
Not for Resale

Introduction

International Standards ISO 9661 and ISO/IEC 11559 specify data interchange on 12,7 mm, 18-track magnetic tape cartridges.

International Standard 13421 concerns a cartridge of a type different from that of those International Standards. Whilst the magnetic tape is also 12,7 mm wide, it is recorded on 48 physical tracks. Also the format is different from that of these previous International Standards. It is characterized by the fact that the physical tracks, recorded and read in pairs, constitute two groups, the first recorded and read in forward direction, the second in reverse direction.

Copyright International Organization for Standardization
Provided by IHS under license with ISO
No reproduction or networking permitted without license from IHS
Not for Resale

Information technology — Data interchange on 12,7 mm, 48-track magnetic tape cartridges — DLT 1 format

Section 1 - General

1 Scope

This International Standard specifies the physical and magnetic characteristics of a 12,7 mm wide, 48-track magnetic tape cartridge, to enable interchangeability of such cartridges. It also specifies the quality of the recorded signals, a format - called Digital Linear Tape 1 (DLT 1) - and a recording method. Together with a labelling standard, e.g. ISO 1001, it allows full data interchange by means of such magnetic tape cartridges.

2 Conformance

2.1 Magnetic tape cartridges

A magnetic tape cartridge shall be in conformance with this International Standard if it satisfies all mandatory requirements of this International Standard. The tape requirements shall be satisfied throughout the extent of the tape.

2.2 Generating systems

A system generating a magnetic tape cartridge for interchange shall be entitled to claim conformance with this International Standard if all the recordings that it makes on a tape according to 2.1 meet the mandatory requirements of this International Standard.

2.3 Receiving systems

A system receiving a magnetic tape cartridge for interchange shall be entitled to claim conformance with this International Standard if it is able to handle any recording made on a tape according to 2.1.

3 Normative references

The following standards contain provisions which, through reference in this text, constitute provisions of this International Standard. At the time of publication, the editions indicated were valid. All standards are subject to revision, and parties to agreements based on this International Standard are encouraged to investigate the possibility of applying the most recent editions of the standards listed below. Members of IEC and ISO maintain registers of currently valid international standards.

ISO 1001:1986 *Information processing - File structure and labelling of magnetic tapes for information interchange.*

ISO 1302:1992 *Technical drawings - Method of indicating surface texture.*

4 Definitions

For the purpose of this International Standard, the following definitions apply.

Copyright International Organization for Standardization
Provided by IHS under license with ISO
No reproduction or networking permitted without license from IHS
Not for Resale

4.1 Average Signal Amplitude: The average peak-to-peak value of the output signal from the read head at the physical recording density of 1 674 ftpmm measured over a minimum length of track of 25,4 mm, exclusive of missing pulses.

4.2 azimuth: The angular deviation, in minutes of arc, of the mean flux transition line of the recording made on a track from the line normal to the Reference Edge.

4.3 back surface: The surface of the tape opposite the magnetic coating which is used to record data.

4.4 Beginning-Of-Tape marker (BOT): A hole punched on the centreline of the tape towards the end nearest to the leader.

4.5 byte: An ordered set of bits acted upon as a unit.

NOTE 1 - In this International Standard, all bytes are 8-bit bytes.

4.6 cartridge: A case containing a single supply reel of 12,7 mm wide magnetic tape with a leader attached at the outer end.

4.7 Cyclic Redundancy Check (CRC) character: A 64-bit character, generated by a mathematical computation, used for error detection.

4.8 Early Warning (EW): A signal generated by the drive indicating the approaching end of the recording area.

4.9 Error-Detecting Code (EDC): A mathematical computation yielding check bytes used for error detection.

4.10 End-Of-Tape marker (EOT): A hole punched on the centreline of the tape towards the end farthest from the leader.

4.11 Entity: A group of ten Logical Blocks treated as a logical unit and recorded on a logical track.

4.12 Error-Correcting Code (ECC): A mathematical computation yielding check bytes used for the correction of errors detected by the CRC and the EDC.

4.13 flux transition position: The point which exhibits the maximum free-space flux density normal to the tape surface.

4.14 flux transition spacing: The distance on the magnetic tape between successive flux transitions.

4.15 Logical Block: The two physical blocks simultaneously written on, or read from, the two physical tracks of a logical track.

4.16 logical track: A pair of physical tracks that are written or read simultaneously.

4.17 magnetic tape: A tape that accepts and retains magnetic signals intended for input, output, and storage purposes on computers and associated equipment.

Copyright International Organization for Standardization
Provided by IHS under license with ISO
No reproduction or networking permitted without license from IHS
Not for Resale

4.18 Master Standard Reference Tape: A tape selected as the standard for reference field, signal amplitude, resolution, peakshift, and overwrite characteristics.

NOTE 2 - The Master Standard Reference Tape has been established by Digital Equipment Corporation.

4.19 object: A Record or a Tape Mark Block.

4.20 physical block: A set of contiguous bytes recorded on a physical track and considered as a unit.

4.21 physical recording density: The number of recorded flux transitions per unit length of track, expressed in flux transitions per millimetre (ftpmm).

4.22 physical track: A longitudinal area on the tape along which a series of magnetic signals can be recorded.

4.23 Record: A collection of User Bytes, the number of which is determined by the host.

4.24 Reference Edge: The bottom edge of the tape when viewing the magnetic coating of the tape with the BOT to the left and the EOT to the right of the observer.

4.25 Reference Field: The Typical Field of the Master Standard Reference Tape.

4.26 Secondary Standard Reference Tape: A tape the characteristics of which are known and stated in relation to those of the Master Standard Reference Tape.

NOTE 3 - Secondary Standard Reference Tapes can be ordered under reference SSRT/DLT1 until the year 2003 from Digital Equipment Corporation, Tapes Products Group, 334 South Street, Shrewsbury, Mass. 01545, USA.

It is intended that these be used for calibrating tertiary reference tapes for routine calibration.

4.27 Standard Reference Amplitude (SRA): The Average Signal Amplitude from the Master Standard Reference Tape when it is recorded with the Test Recording Current at 1 674 ftpmm.

4.28 Standard Reference Current: The current that produces the Reference Field.

4.29 Test Recording Current: The current that is 1,1 times the Standard Reference Current.

4.30 Typical Field: In the plot of the Average Signal Amplitude against the recording field at the physical recording density of 1674 ftpmm, the minimum field that causes an Average Signal Amplitude equal to 95 % of the maximum Average Signal Amplitude.

5 Conventions and notations

5.1 Representation of numbers

The following conventions and notations apply in this International Standard, unless otherwise stated.

- In each block and in each field the bytes shall be arranged with Byte 1, the least significant, first. Within each byte the bits shall be arranged with Bit 1, the least significant, first and Bit 8, the most significant bit, last. This order applies to the data, and to the input and output of the error-detecting and error-correcting codes, and to the cyclic redundancy characters.

--`,,```,,,,````-`-`,,`,,`,`,,`---

Copyright International Organization for Standardization
Provided by IHS under license with ISO
No reproduction or networking permitted without license from IHS
Not for Resale

- Letters and digits in parentheses represent numbers in hexadecimal notation.
- The setting of bits is denoted by ZERO or ONE.
- Numbers in binary notation and bit patterns are represented by strings of ZEROs and ONEs shown with the most significant bit to the left.

5.2 Names

The names of basic elements, e.g. specific fields, are written with a capital initial letter.

5.3 Acronyms

BOT	Beginning of Tape
CF1	Control Field 1
CF2	Control Field 2
CRC	Cyclic Redundancy Check (character)
ECC	Error-Correcting Code
EDC	Error-Detecting Code
EOD	End of Data
EOT	End of Tape
EOTR	End of Track
EW	Early Warning
FCT1	Forward Calibration Track 1
FCT2	Forward Calibration Track 2
LEOT	Logical End of Tape
MFM	Modified Frequency Modulation
RCT1	Reverse Calibration Track 1
RCT2	Reverse Calibration Track 2
SRA	Standard Reference Amplitude

6 Environment and safety

Unless otherwise stated, the conditions specified below refer to the ambient conditions in the test or computer room and not to those within the tape drive.

6.1 Cartridge and tape testing environment

Unless otherwise stated, tests and measurements made on the cartridge and tape to check the requirements of this International Standard shall be carried out under the following conditions:

- temperature: 23 °C ± 2 °C
- relative humidity: 40 % to 60 %
- conditioning before testing: 24 h

6.2 Cartridge operating environment

Cartridges used for data interchange shall be capable of operating under the following conditions:

- temperature: 10 °C to 40 °C
- relative humidity: 20 % to 80 %
- wet bulb temperature: 25 °C max.

NOTE 4 - Localized tape temperatures in excess of 49 °C may cause tape damage.

Copyright International Organization for Standardization
Provided by IHS under license with ISO
No reproduction or networking permitted without license from IHS
Not for Resale

If during storage and/or transportation a cartridge has been exposed to conditions outside the above values, it shall be conditioned before use by exposure to the operating environment for a time equal to, or greater than, the time away from the operating environment up to a maximum of 2 h. There shall be no deposit of moisture on or in the cartridge.

6.3 Cartridge storage environment

Cartridges shall be stored under the following conditions:

- temperature: 16 °C to 32 °C
- relative humidity: 20 % to 80 %
- wet bulb temperature: 26 °C max.

Tapes intended for archiving data for one year or more shall be stored under the following conditions:

- temperature: 18 °C to 26 °C
- relative humidity: 20 % to 60 %

The stray magnetic field at any point on the tape shall not exceed 4 000 A/m. There shall be no deposit of moisture on or in the cartridge.

6.4 Safety requirements

6.4.1 Safeness

The cartridge and its components shall not constitute any safety or health hazard when used in the intended manner, or through any foreseeable misuse in an information processing system.

6.4.2 Flammability

The cartridge and its components shall be made from materials which, if ignited from a match flame, do not continue to burn in a still carbon dioxide atmosphere.

6.5 Transportation

This International Standard does not specify parameters for the environment in which cartridges should be transported. Annex F gives some recommendations for transportation.

Section 2 - Requirements for the unrecorded tape

7 Mechanical and electrical requirements

7.1 Material

The tape shall consist of a base material (oriented polyethylene terephthalate film or its equivalent) coated on one surface with a strong yet flexible layer of ferromagnetic material dispersed in a suitable binder. The other surface of the cartridge shall be coated with a non-ferromagnetic conductive coating.

7.2 Tape length

The length of the tape shall be 355 m min. and 365 m max.

Copyright International Organization for Standardization
Provided by IHS under license with ISO
No reproduction or networking permitted without license from IHS
Not for Resale

7.3 Width of the tape

The width of the tape shall be 12,649 mm ± 0,010 mm.

The width shall be measured across the tape from edge to edge when the tape is under a tension of less than 0,28 N.

7.4 Total thickness of the tape

The total thickness of the tape at any point shall be between 12,0 µm and 14,0 µm.

7.5 Thickness of the base material

The thickness of the base material shall be between 9,0 µm and 11 µm.

7.6 Thickness of the magnetic coating

The thickness of the magnetic coating shall be between 2,0 µm and 3,0 µm.

7.7 Thickness of the back coating

The thickness of the back coating shall be between 0,4 µm and 0,9 µm.

7.8 Tape discontinuity

There shall be no discontinuities in the tape between the BOT and EOT such as those produced by tape splicing or perforations.

7.9 Longitudinal curvature

The longitudinal curvature is measured as the departure of the Reference Edge of the tape from a straight line along the longitudinal dimension of the tape in the plane of the tape surface.

7.9.1 Requirement

Any deviation of the Reference Edge from a straight line shall be continuous and shall not exceed 0,038 mm within any 229 mm length of tape.

7.9.2 Procedure

Measure at a tension of 1,39 N ± 0,28 N in a test fixture equipped with two guides spaced at 229 mm. The two guides shall be spring-loaded to position the Reference Edge of the tape against two edge control surfaces. Measure the maximum deviation of the Reference Edge of the tape from the line drawn between the two control surfaces.

7.10 Out-of-Plane distortions

All visual evidence of out-of-plane distortion shall be removed when the tape is subjected to a uniform tension of 0,6 N. Out-of-plane distortions are local deformations which cause portions of the tape to deviate from the plane of the surface of the tape. Out-of-plane distortions are most readily observed when the tape is lying on a flat surface under no tension.

7.11 Cupping

The departure across the width of the tape from a flat surface shall not exceed 0,76 mm.

Procedure

Cut a 1,0 m ± 0,1 m length of tape. Condition it for a minimum of 3 hours in the test environment by hanging it so that both surfaces are freely exposed to the test environment. From the centre portion of the conditioned tape cut a test piece of approximately 25 mm length. Stand the test piece on its end in a cylinder which is at least 25 mm high with an inside diameter of 13,0 mm ± 0,2 mm. With the cylinder standing on an optical comparator measure the cupping by aligning the edges of the test piece to the reticle and determining the distance from the aligned edges to the corresponding surface of the test piece at its centre.

Copyright International Organization for Standardization
Provided by IHS under license with ISO
No reproduction or networking permitted without license from IHS
Not for Resale

7.12 Roughness of the coating surfaces

7.12.1 Roughness of the back coating surface

The back coating surface shall have an arithmetic average roughness R_a between 0,005 µm and 0,025 µm (ISO 1302:N 2). This measurement shall be made using a contacting stylus of radius 12,5 µm with a 20 mg load, and a 254 µm cutoff range.

7.12.2 Roughness of the magnetic coating surface

The magnetic coating surface shall have an arithmetic average roughness R_a between 0,005 0 µm and 0,012 5 µm (ISO 1302: N 3). For this measurement, the contacting stylus radius shall be 12,5 µm with a 20 mg load, and a 254 µm cutoff range.

7.13 Coating adhesion

The force required to peel any part of the coating from the tape base material shall not be less than 0,2 N.

Procedure

a) Take a test piece of the tape approximately 380 mm long and scribe a line through the recording coating across the width of the tape 125 mm from one end.

b) Using a double-sided pressure sensitive tape, attach the full width of the test piece to a smooth metal plate, with the magnetic coating (recording surface) facing the plate, as shown in figure 1.

c) Fold the test piece over 180°, attach the metal plate and the free end of the test piece to the jaws of a universal testing machine and set the speed of the jaw separation to 254 mm per min.

d) Note the force at which any part of the coating first separates from the base material. If this is less than 0,2 N, the test has failed. If the test piece peels away from the double-sided pressure sensitive tape before the force exceeds 0,2 N, an alternative type of double-sided pressure sensitive tape shall be used.

e) Repeat a) to d) for the back coating.

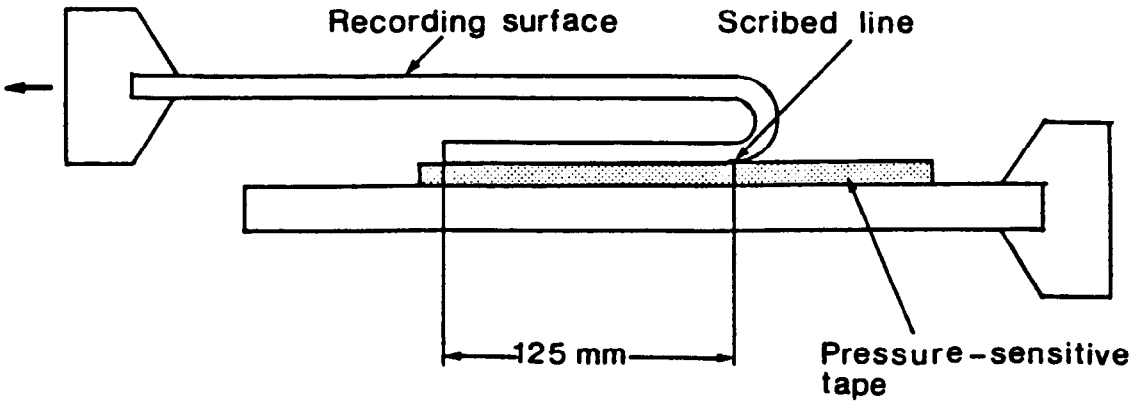

Figure 1 - Measurement of the coating adhesion

Copyright International Organization for Standardization
Provided by IHS under license with ISO
No reproduction or networking permitted without license from IHS
Not for Resale

7.14 Layer-to-layer adhesion

Layer-to-layer adhesion refers to the tendency of a layer, when held in close proximity to the adjacent layer, to bond itself to an adjacent layer so that free and smooth separation of the layers is difficult.

7.14.1 Requirements

There shall be no evidence of delamination or other damage to the coatings.

7.14.2 Procedure

a) Fasten one end of a 914 mm length of tape, magnetic coating inwards, to a horizontally mounted stainless steel cylinder with a low cold-flow adhesive material.

b) The dimensions (see figure 2) of the cylinder shall be

- diameter: 12,7 mm;
- length: 102 mm.

c) Attach a mass of 1 000 g to the opposite end of the tape.

d) Attach, 25,4 mm above the mass, a narrow strip of double-sided adhesive tape to the magnetic coating.

e) Slowly rotate the cylinder, so that the tape winds uniformly around it into a compact and even roll. The double-sided tape secures the end and prevents unwinding when the mass is removed.

f) The cylinder with the tape shall then be exposed to the temperature and humidity cycle given in table 1.

Table 1 – Temperature and humidity cycle

Time	Temperature	RH
16 h to 18 h	54 °C	85 %
4 h	54 °C	10 % or less
1 h to 2 h	21 °C	45 %

g) Open the end of the roll and remove the double-sided adhesive tape.

h) Release the free end of the tape.

i) The outer one or two wraps shall spring loose without adhesion.

j) Hold the free end of the tape and allow the cylinder to fall, thereby unwinding the tape.

k) The tape shall show no coating delamination, except for the 51 mm of tape nearest to the cylinder.

Copyright International Organization for Standardization
Provided by IHS under license with ISO
No reproduction or networking permitted without license from IHS
Not for Resale

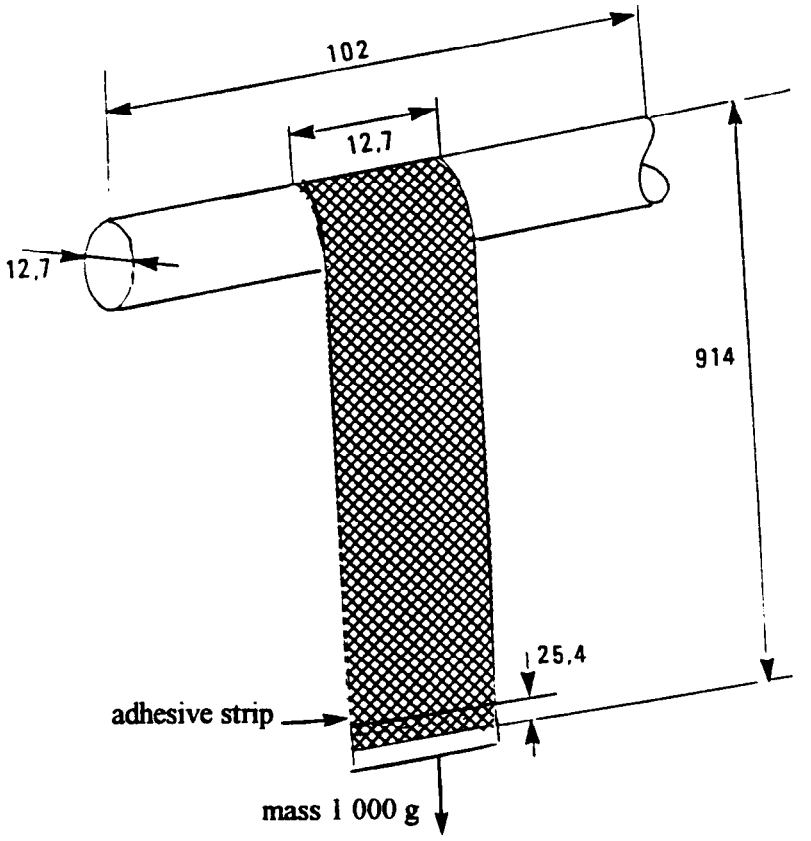

Figure 2 - Measurement of layer-to-layer adhesion

7.15 Modulus of elasticity

The modulus of elasticity (Young's modulus) is the ratio of stress to strain in the longitudinal direction.

7.15.1 Requirement

The modulus of elasticity shall be between 5 500 N/mm^2 and 8 500 N/mm^2.

7.15.2 Procedure

Clamp a test piece of tape at least 178 mm in length with an initial 102 mm separation between the jaws of a universal testing machine with a nominal crosshead speed of 3 mm/min. Calculate the modulus using the chord of the curve between the force at 0 % and 1 % elongation.

7.16 Flexural rigidity

Flexural rigidity is the ability of the tape to resist bending in the longitudinal direction.

7.16.1 Requirement

The flexural rigidity of the tape in the longitudinal direction shall be between $0,5 \times 10^{-3}$ N · mm and $2,9 \times 10^{-3}$ N · mm.

7.16.2 Procedure

Calculate the flexural rigidity D from the following equation:

Copyright International Organization for Standardization
Provided by IHS under license with ISO
No reproduction or networking permitted without license from IHS
Not for Resale

$$D = \frac{E \times t^3}{12} \times (1 - v^2)$$

where

E = modulus of elasticity obtained from 7.14;

t = measured thickness of the tape in millimetres;

v = Poisson's ratio, set to 0,33.

7.17 Tensile yield force

The tensile yield force required to elongate the test piece by 3 % shall not be less than 14,7 N.

7.17.1 Procedure

Use a static-weighing-constant-rate-of-grip separation tester capable of indicating the load with an accuracy of ± 2 %. Clamp a test piece of tape at least 178 mm long with an initial 102 mm separation between the jaws. Elongate the test piece at a rate of 51 mm/min. until a minimum elongation of 10 % is reached. The force required to produce an elongation of 3 % is the tensile yield force.

7.18 Electrical resistance

7.18.1 Requirement

The electrical resistance of any square area of the magnetic coating shall

- be greater than 50 x 10^6 Ω;
- not exceed 50 x 10^{12} Ω.

The electrical resistance of any square area of the back coating shall

- not exceed 100 x 10^6 Ω.

7.18.2 Procedure

Condition a test piece of tape in the test environment for 24 h. Position the test piece over two 24-carat gold-plated (see figure 3), semi-circular electrodes having a radius r = 25,4 mm and a finish of at least N4, so that the recording surface is in contact with each electrode. These electrodes shall be placed parallel to the ground and parallel to each other at a distance d = 12,7 mm between their centres. Apply a force F of 1,62 N to each end of the test piece. Apply a d.c. voltage of 100 V ± 10 V across the electrodes and measure the resulting current flow. From this value, determine the electrical resistance.

Repeat for a total of five positions along the test piece and average the five resistance readings. For the back coating repeat the procedure with the back surface in contact with the electrodes.

Copyright International Organization for Standardization
Provided by IHS under license with ISO
No reproduction or networking permitted without license from IHS
Not for Resale

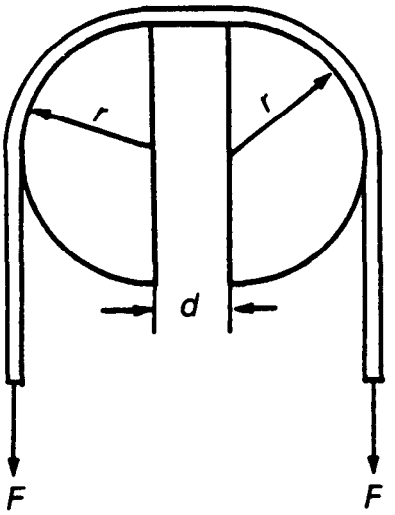

Figure 3 - Measurement of electrical resistance

When mounting the test piece, make sure that no conducting paths exist between the electrodes except that through the coating under test.

NOTE 5 - Particular attention should be given to keeping the surfaces clean.

7.19 Inhibitor tape

This International Standard does not specify parameters for assessing whether or not a tape is an inhibitor tape. However, annex G gives further information on inhibitor tapes.

7.20 Abrasivity

Tape abrasivity is the tendency of the magnetic coating to wear the magnetic heads.

7.20.1 Requirement

The depth of the wear pattern in a ferrite wear bar shall be less than 1,27 µm.

7.20.2 Procedure

A test piece 61 m in length shall be passed for 100 passes (50 cycles) over a rectangular bar of manganese zinc ferrite (see figure 4). The bar shall be 0,3 mm wide and its top surface shall be rounded off with a radius r_0 = 5 mm. The tape speed shall be 2,54 m/s, the tension shall be nominally 1,3 N and the wrap angle shall be 12°. The wear depth is measured with a profilometer across the width of the tape path.

NOTE 6 - Manganese zinc ferrite should be available commercially from Philips Ceramic Division in Saugerties (NY) under order part number 3H7. This information is given for the convenience of the users of this International Standard and does not constitute an endorsement by ISO or IEC of this product.

Copyright International Organization for Standardization
Provided by IHS under license with ISO
No reproduction or networking permitted without license from IHS
Not for Resale

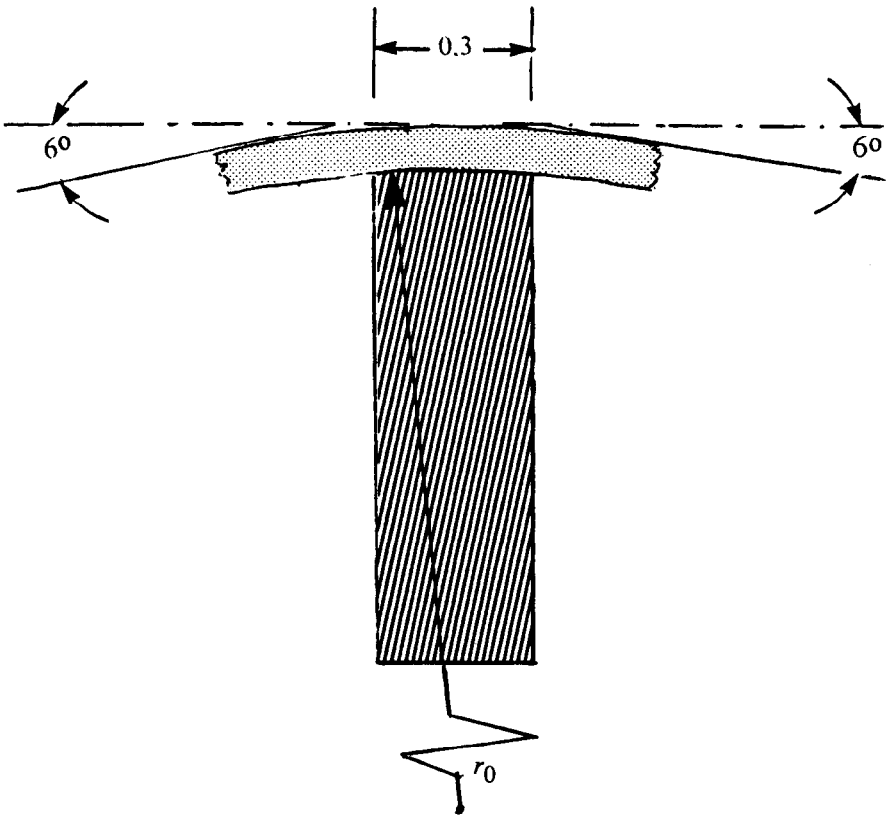

Figure 4 - Measurement of abrasivity (not to scale)

7.21 Light transmittance of the tape and the leader

The light transmittance of the tape and the leader shall be less than 5 % when measured according to the method specified in annex A.

7.22 Coefficient of dynamic friction

The coefficient of dynamic friction is measured between the surfaces of the tape, and calcium titanate ceramic.

7.22.1 Requirements

Between the magnetic surface and the back surface : greater than 0,20
Between the magnetic surface and other surfaces: 0,10 to 0,40
Between the back surface and calcium titanate: 0,10 to 0,25

7.22.2 Procedure for the measurement of the friction between the magnetic surface and the back surface

a) Wrap a first piece of tape around a calcium titanate ceramic cylinder (R_a = 0,05 µm) of diameter 25,4 mm and wrap it with a total wrap angle of more than 90° with the back surface outwards.

b) Wrap a second test piece, with the magnetic surface inwards, around the first test piece with a total wrap angle of 90°.

c) Exert on one end of the outer test piece a force of 0,54 N.

d) Attach the other end to a force gauge mounted on a linear slide.

e) Drive the slide at a speed of 1 mm/s.

f) Connect the force gauge to a plotter to record the results.

Copyright International Organization for Standardization
Provided by IHS under license with ISO
No reproduction or networking permitted without license from IHS
Not for Resale

7.22.3 Procedure for the measurement of the friction between the magnetic surface or the back surface and calcium titanate ceramic

a) Wrap a piece of tape around a calcium titanate ceramic cylinder (R_a = 0,05 µm) of diameter 25,4 mm and wrap it with a total wrap angle of 90° with the magnetic surface or the back surface, as appropriate, inwards.

b) Exert on one end of the test piece a force of 0,54 N.

c) Attach the other end to a force gauge mounted on a linear slide.

d) Drive the slide at a speed of 1 mm/s.

e) Connect the force gauge to a plotter to record the results.

NOTE 7 - Calcium titanate ceramic should be available commercially from Philips Ceramic Division in Saugerties (NY) under order part Ca Ti. This information is given for the convenience of users of this International Standard and does not constitute an endorsement by ISO or IEC of this product.

8 Magnetic recording characteristics

The magnetic recording characteristics shall be defined by testing the requirements given below.

When performing the tests, the output or resultant signal shall be measured on the same relative pass for both a tape calibrated to the Master Standard Reference Tape and the tape under test (read-while-write, or on equipment without read-while-write capability, on the first forward-read-pass) on the same equipment.

The following conditions shall apply to the testing of all magnetic recording characteristics, unless otherwise noted.

- tape condition: a.c. erased to 2 % or less of the Average Signal Amplitude
- tape speed: 2,54 m/s
- read track: within the written track
- gap alignment: within 5' between the mean write transitions and the read gap
- write gap length: 2,0 µm ± 0,3 µm
- write gap width: 0,216 mm ± 0,010 mm
- read gap length: 0,36 µm ± 0,10 µm
- read gap width: 0,102 mm ± 0,010 mm
- tape tension: 1,14 N ± 0,14 N
- recording current: Test Recording Current
- physical recording densities: $2f$ = 1674 ftpmm ± 33 ftpmm, corresponding to 2,126 MHz ± 2 %
  $1f$ = 837 ftpmm ± 16 ftpmm, corresponding to 1,063 MHz ± 2 %
- Bandwidth of the read amplifier: 3,2 MHz

8.1 Typical Field

The Typical Field shall be between 75 % and 125 % of the Reference Field.

Traceability to the Reference Field is provided by the calibration factors supplied with each Secondary Standard Reference Tape.

Copyright International Organization for Standardization
Provided by IHS under license with ISO
No reproduction or networking permitted without license from IHS
Not for Resale

8.2 Signal amplitude

The Average Signal Amplitude shall be between 85 % and 115 % of the SRA.

Traceability to the SRA is provided by the calibration factors supplied with each Secondary Standard Reference Tape.

8.3 Resolution

The ratio of the average signal amplitude at the physical recording density of 1 674 ftpmm to that at the physical recording density of 837 ftpmm shall be between 90 % and 120 % of the same ratio for the Master Standard Reference Tape.

Traceability to the resolution of the Master Standard Reference Tape is provided by the calibration factors supplied with each Secondary Standard Reference Tape.

8.4 Overwrite

Overwrite is the ratio of the residual signal of the average signal amplitude recorded at 837 ftpmm after being overwritten at 1 674 ftpmm to the average signal amplitude of the 837 ftpmm signal.

8.4.1 Requirement

The overwrite for the tape shall be less than 110 % of the overwrite for the Master Standard Reference Tape.

Traceability to the overwrite of the Master Standard Reference Tape is provided by the calibration factors supplied with each Secondary Standard Reference Tape.

8.5 Peak shift

Peak shift is measured as the time displacement from nominal of the ONEs transitions in the MFM-recorded pattern 110110110....

8.5.1 Requirement

For a peak shift ratio of n % of the Master Standard Reference Tape, the measured peak shift ratio shall be between (n-2) % and (n+2) %.

Traceability to the peak shift ratio of the Master Standard Reference Tape is provided by the calibration factors supplied with each Secondary Standard Reference Tape.

8.5.2 Procedure

The time interval measurements shall be averaged over 250 ONE-ONE-ZERO patterns taken at a sampling rate of 96 times $2f$.

The time between adjacent peaks in the ONE-ONE interval is denoted as t_1. The time between the last ONE in the ONE-ONE interval to the last ONE in the following ONE-ONE interval is denoted as t_0.

$$\text{Peak shift} = \frac{3t_1 - t_0}{2t_0} \times 100\ \%$$

Copyright International Organization for Standardization
Provided by IHS under license with ISO
No reproduction or networking permitted without license from IHS
Not for Resale

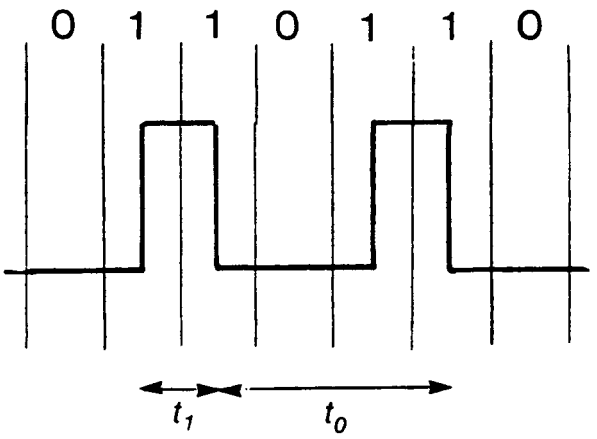

Figure 5 - Measurement of peak shift

9 Tape quality

9.1 Missing pulses

A missing pulse is a loss of read signal amplitude. A missing pulse exists when the base-to-peak read signal amplitude is less than 35 % half of the Average Signal Amplitude for the preceding 25,4 mm of tape.

9.1.1 Requirement

The average missing pulse rate shall be less than 20 missing pulses for any recorded length of track of 100 m.

9.2 Missing pulse zone

A missing pulse zone is a sequence of missing pulses exceeding 100 mm.

9.2.1 Requirement

Missing pulse zones shall not occur.

9.3 Tape durability

This International Standard does not specify parameters for assessing tape durability. However, a recommended procedure is described in annex H.

Section 3 - Mechanical specifications of the tape cartridge

10 General

The tape cartridge shall consist of the following elements

- a case
- a reel for the magnetic tape
- a locking mechanism for the reel
- a magnetic tape wound on the hub of the reel
- a write-inhibit mechanism
- a tape leader

Copyright International Organization for Standardization
Provided by IHS under license with ISO
No reproduction or networking permitted without license from IHS
Not for Resale

Dimensional characteristics are specified for those parameters deemed mandatory for interchange and compatible use of the cartridge. Where there is freedom of design, only the functional characteristics of the elements described are indicated.

Where they are purely descriptive the dimensions are referred to three reference planes A, B, and C forming a geometrical trihedral. Where the dimensions are related to the position of the cartridge in the drive, they may be referenced to another surface of the cartridge.

In the enclosed drawings a typical implementation is represented in third angle projection.

Figure 6 shows a general view of the cartridge.
Figure 7 shows the reference planes A, B, C.
Figure 8 shows the bottom side of the cartridge.
Figure 9 shows the right side of the cartridge.
Figure 10 shows the back side of the cartridge.
Figure 11 shows the left side of the cartridge.
Figure 12 shows a partial cross-section of the cartridge in locked position.
Figure 13 shows a partial cross-section of the cartridge in operating position.
Figure 14 shows the leader-to-tape connection.
Figure 15 shows the splice of the leader-to-tape connection.
Figure 16 shows the leader.
Figure 17 shows the front side of the cartridge.
Figure 18 shows the back side of the cartridge with partial cut.
Figure 19 shows the top side of the cartridge with partial cut and the door open.

Figure 6 shows a general view of the cartridge. When it is not in the operating position, the reel of magnetic tape is locked and cannot rotate. When loaded into the drive, the back side is introduced first and the front side remains visible during operation. During the loading process the tape reel is unlocked and the position of the cartridge within the drive is fixed by elements of the drive engaging with corresponding elements of the case.

The position of the case relative to the reference planes A, B and C is shown in figure 7. The top side lies in reference plane A, the right side lies in reference plane B and the back side lies in reference plane C.

10.1 Bottom side and right side (figures 8 and 9)

The overall dimensions of the cartridge shall be

$\ell_1 = 105{,}79 \text{ mm} \pm 0{,}20 \text{ mm}$

$\ell_2 = 105{,}41 \text{ mm} \pm 0{,}20 \text{ mm}$

$\ell_3 = 25{,}40 \text{ mm} \pm 0{,}25 \text{ mm}$

The bottom side shall have a window the dimensions and the position of which shall be defined by

$\ell_4 = 6{,}25 \text{ mm} \pm 0{,}10 \text{ mm}$

$\ell_5 = 4{,}85 \text{ mm} \pm 0{,}05 \text{ mm}$

$\ell_6 = 84{,}07 \text{ mm} \pm 0{,}20 \text{ mm}$

$\ell_7 = 3{,}81 \text{ mm} \pm 0{,}05 \text{ mm}$

This window allows one of the fingers of the drive to penetrate into the case for partially unlocking the reel of tape (see 10.6).

A positioning hole on the bottom side and a guiding notch, followed by a positioning notch in the right side determine the position of the cartridge in the drive.

Copyright International Organization for Standardization
Provided by IHS under license with ISO
No reproduction or networking permitted without license from IHS
Not for Resale

The dimensions and the position of the positioning hole shall be defined by

$\ell_8 = 21{,}59 \text{ mm} \pm 0{,}10 \text{ mm}$

$\ell_9 = 4{,}45 \text{ mm} \; {}^{+0{,}13}_{-0{,}00} \text{ mm}$

$\ell_{10} = 2{,}79 \text{ mm} \pm 0{,}05 \text{ mm}$

$\ell_{11} = 44{,}58 \text{ mm} \pm 0{,}20 \text{ mm}$

The dimensions and the position of the positioning notch shall be defined by

$\ell_{12} = 5{,}56 \text{ mm} \pm 0{,}10 \text{ mm}$

$\ell_{13} = 33{,}30 \text{ mm} \pm 0{,}20 \text{ mm}$

$\ell_{14} = 5{,}08 \text{ mm} \pm 0{,}10 \text{ mm}$

$h_1 = 9{,}02 \text{ mm} \pm 0{,}10 \text{ mm}$

$A_1 = 14° \pm 30'$

The dimensions and the position of the guiding notch shall be defined by

$\ell_{15} = 8{,}59 \text{ mm} \pm 0{,}10 \text{ mm}$

$\ell_{16} = 24{,}64 \text{ mm} \pm 0{,}10 \text{ mm}$

$\ell_{17} = 1{,}50 \text{ mm} \pm 0{,}05 \text{ mm}$

$A_2 = 45° \pm 30'$

$A_3 = 14° \pm 30'$

The right side shall have an indicator connected to the manually operable write-inhibit switch described in 10.5. The dimensions and the position of this indicator shall be defined by

$\ell_{18} = 8{,}64 \text{ mm} \pm 0{,}10 \text{ mm}$

$\ell_{19} = 5{,}08 \text{ mm} \pm 0{,}10 \text{ mm}$

$\ell_{20} = 86{,}11 \text{ mm} \pm 0{,}20 \text{ mm}$

$\ell_{21} = 10{,}16 \text{ mm} \pm 0{,}10 \text{ mm}$

Writing is enabled when the surface of the indicator is substantially flush with the cartridge wall. When this surface is recessed by at least 5,1 mm writing is inhibited. When a force of up to 1,0 N is exerted perpendicularly on the centre of the surface of the indicator, it shall not recede by more than 0,5 mm from reference plane B.

10.2 Back side and left side (figures 10 and 11)

The back side shall have a window the dimensions and position of which shall be

$\ell_{22} = 8{,}76 \text{ mm} \pm 0{,}10 \text{ mm}$

$\ell_{23} = 4{,}25 \text{ mm} \pm 0{,}10 \text{ mm}$

$\ell_{24} = 4{,}45 \text{ mm} \pm 0{,}10 \text{ mm}$

$\ell_{25} = 8{,}89 \text{ mm} \pm 0{,}10 \text{ mm}$

This window allows a further finger of the drive to penetrate into the case to finally unlock the reel of tape (see also 10.6).

A door shall be rotatably mounted at the corner of the back side and the left side. It is described in 10.6.

Copyright International Organization for Standardization
Provided by IHS under license with ISO
No reproduction or networking permitted without license from IHS
Not for Resale

The left side shall have an edge the position and length of which shall be

$\ell_{26} = 61{,}47 \text{ mm} \pm 0{,}20 \text{ mm}$

$\ell_{27} = 9{,}65 \text{ mm} \begin{matrix} +0{,}13 \\ -0{,}00 \end{matrix} \text{ mm}$

10.3 Tape reel (figures 8, 12 and 13)

The bottom side of the case shall have a circular window through which the drive spindle contacts the hub of the reel and transmits torque. The diameter of this window shall be

$d_1 = 35{,}05 \text{ mm} \pm 0{,}08 \text{ mm}$

The position of its centre shall be defined by

$\ell_{69} = 50{,}42 \text{ mm} \pm 0{,}31 \text{ mm}$

$\ell_{70} = 52{,}83 \text{ mm} \pm 0{,}10 \text{ mm}$

The interface between the spindle and the hub is provided by 48 evenly spaced teeth in the hub. In the non-operating position, the surface of the hub shall be recessed from the outside surface of the case by

$\ell_{28} = 0{,}38 \text{ mm} \pm 0{,}05 \text{ mm}$

The tooth profile consists of straight flanks. The envelope dimensions of the teeth shall be

$d_2 = 23{,}88 \text{ mm} \pm 0{,}13 \text{ mm}$

$d_3 = 29{,}21 \text{ mm} \pm 0{,}13 \text{ mm}$

$d_4 = 34{,}29 \text{ mm} \pm 0{,}13 \text{ mm}$

$A_4 = 22° \pm 30'$

$A_5 = 15° \pm 30'$

where d_3 is the pitch diameter of the teeth.

In the operating position the surface of the hub shall be at a distance

$\ell_{29} = 23{,}55 \text{ mm} \pm 0{,}10 \text{ mm}$

from reference plane A.

10.4 Tape leader (figures 14, 15 and 16)

The positions of the BOT and EOT relative to the leader/tape connection and to the physical end of the tape shall be as follows.

The BOT shall be at a distance

$\ell_{30} = 8\,690 \text{ mm} \pm 150 \text{ mm}$

from the leader/tape connection.

The EOT shall be at a distance

$\ell_{31} = 2\,540 \text{ mm} \pm 127 \text{ mm}$

from the physical end of the tape, which is fixed to the hub of the reel. Both the BOT hole and EOT hole shall have a diameter

$d_5 = 4{,}78 \text{ mm} \pm 0{,}10 \text{ mm}$

Copyright International Organization for Standardization
Provided by IHS under license with ISO
No reproduction or networking permitted without license from IHS
Not for Resale

Figure 15 shows the relative positions of the tape, the leader and the splice tape. They shall be defined by

ℓ_{32}= 11,81 mm min. / 20,32 mm max.

ℓ_{33}= 0,25 mm max.

ℓ_{34}= 0,41 mm max.

ℓ_{35}= 0,00 mm min.

ℓ_{36}= 0,20 mm max.

Dimensions ℓ_{34}, ℓ_{35} and ℓ_{36} are related to, and depend on, each other. Dimension ℓ_{35} expresses the requirement that the splice tape shall in no case extend beyond the edges of either the tape or the leader.

There shall be no yield of the splice when a force of 22,2 N max. is applied in longitudinal direction across the splice.

Figure 16 shows the dimensions of the leader which shall be

ℓ_{37} = 12,65 mm $^{+\,0,00}_{-\,0,10}$ mm

ℓ_{38}= 309,63 mm ± 0,30 mm

ℓ_{39}= 130,81 mm ± 0,30 mm

ℓ_{40}= 22,35 mm ± 0,10 mm

ℓ_{41}= 8,13 mm ± 0,10 mm

ℓ_{42}= 3,05 mm ± 0,05 mm

ℓ_{43}= 2,95 mm ± 0,05 mm

ℓ_{44} = 2,79 mm $^{+\,0,13}_{-\,0,00}$ mm

ℓ_{45}= 18,54 mm ± 0,10 mm

ℓ_{46}= 8,69 mm ± 0,10 mm

ℓ_{47}= 5,89 mm ± 0,10 mm

ℓ_{48}= 6,33 mm ± 0,10 mm

ℓ_{49}= 3,40 mm ± 0,05 mm

ℓ_{50}= 3,73 mm ± 0,05 mm

ℓ_{51}= 5,00 mm ± 0,05 mm

ℓ_{52}= 7,47 mm ± 0,10 mm

ℓ_{53}= 6,86 mm ± 0,10 mm

ℓ_{54}= 8,15 mm ± 0,10 mm

ℓ_{55}= 2,24 mm ± 0,10 mm

ℓ_{56}= 3,40 mm ± 0,05 mm

ℓ_{57}= 5,89 mm ± 0,10 mm

r_1 = 4,98 mm ± 0,05 mm

r_2 = 15,01 mm ± 0,10 mm

r_3 = 10,21 mm ± 0,10 mm

r_4 = 3,40 mm ± 0,05 mm

Copyright International Organization for Standardization
Provided by IHS under license with ISO
No reproduction or networking permitted without license from IHS
Not for Resale

r_5 = 10,21 mm ± 0,10 mm

r_6 = 3,40 mm ± 0,05 mm

$A_6 = 5° \pm 30'$

$A_7 = 15° \pm 30'$

$A_8 = 60° \pm 30'$

The design of the leader is explained in 10.6.

10.5 Front side (figure 17)

The manually operable write-inhibit switch shall have the dimensions

$\ell_{58} = 18{,}29 \text{ mm} \begin{smallmatrix} +0{,}00 \\ -0{,}20 \end{smallmatrix} \text{ mm}$

$\ell_{59} = 26{,}60 \text{ mm} \pm 0{,}20 \text{ mm}$

This switch shall have a detent at its two end positions with a force suitable to meet the requirement of the write-inhibit indicator in the right side of the case with which it shall be connected. The actual force depends on the design of the connection.

The front side shall have a slot intended for labels. The dimensions of this slot shall be

$\ell_{60} = 54{,}40 \text{ mm} \pm 0{,}20 \text{ mm}$

$\ell_{61} = 18{,}40 \text{ mm} \pm 0{,}20 \text{ mm}$

$\ell_{62} = 21{,}40 \text{ mm} \pm 0{,}20 \text{ mm}$

$\ell_{63} = 0{,}76 \text{ mm} \pm 0{,}10 \text{ mm}$

10.6 Operation of the cartridge (figures 18 and 19)

When the cartridge is introduced into the drive, the sequence of events is as follows.

a) The door shall have a movable lock the lower edge of which shall be at a distance

$\ell_{64} = 14{,}50 \text{ mm} \pm 0{,}20 \text{ mm}$

from reference plane A. A cam of the drive raises this lock in order to unlock the door which shall be unlocked when the edge is raised by 1,0 mm min.

The door is then opened 90° by the drive. It shall be able to rotate further up to 105°. In the open position of the door the whole back side shall be accessible except the part limited by

$\ell_{65} = 35{,}79 \text{ mm} \pm 0{,}20 \text{ mm}$.

In this position the space along the left side that is delimited by

$\ell_{66} = 4{,}57 \text{ mm} \pm 0{,}10 \text{ mm}$

shall be free for a drive element to contact the edge defined by ℓ_{26} and ℓ_{27} (see figure 11).

b) A finger of the drive penetrates into the case through the window defined by ℓ_{22} to ℓ_{25} (see figure 10) to partially unlock the reel. The corresponding part of the locking mechanism shall not require a penetration other than 8 mm ± 1 mm nor a force other than 3,3 N ± 0,4 N to be actuated.

c) When the cartridge has been completely introduced into the drive, it is held in position by elements of the drive engaging the positioning notch of the right side (figures 8 and 9) and the positioning hole in the bottom side (figure 8).

A second finger of the drive penetrates through the window of the bottom side defined by ℓ_4 to ℓ_7 and completely unlocks the reel. The requirements for penetration and force are the same as specified in b) for the first finger.

Copyright International Organization for Standardization
Provided by IHS under license with ISO
No reproduction or networking permitted without license from IHS
Not for Resale

d) The drive spindle engages the teeth of the hub and raises the reel into the operating position (see figure 13). The force with which the tape reel is held against the spindle shall be 6,0 N ± 0,5 N.

e) In this final position of the cartridge within the drive, the tip of the leader shall be positioned as specified by

ℓ_{67} = 4,42 mm ± 1,52 mm

ℓ_{68} = 49,28 mm ± 1,27 mm

as shown in figures 18 and 19.

f) When the cartridge is within the drive in the operating position (figures 13 and 19), the tape is pulled out of the cartridge by a drive leader attached to the hub of a reel within the drive. The tip of this drive leader is designed so as to match the shape of the main hole of the tape leader and to engage it. This drive leader has a hole corresponding to that shown in detail B of figure 16. Dimensions and positions of these two holes are such that when the tape leader is wound onto the hub of the drive reel the connection of the two leaders lies between the two holes.

The tape leader has a stop edge the longitudinal position of which relative to the end of the main hole is specified by ℓ_{40} (figure 16). The case shall have an abutment against which this stop edge comes to rest when the tape is completely pulled back into the cartridge. This abutment, together with a case element engaging the slot of the tape leader shall be such that the dimensional requirements for ℓ_{67} and ℓ_{68} are met.

The tape leader and the abutment shall withstand the impact of having to stop the full reel when the tape leader is retracted with a speed in the range 152 mm/s to 178 mm/s. Until the reel is fully locked, i.e. until the cartridge is ejected from the drive, the stop edge shall be held against the abutment with a force in the range 1,1 N to 1,7 N.

10.7 Tape winding

The tape shall be wound on the hub with the magnetic coating facing inwards, so that during forward read/write operation the tape is unwound from the cartridge reel in a counterclockwise direction when viewed from the top of the cartridge.

The tape shall be wound with a tension of 1,11 N ± 0,28 N.

10.8 Moment of inertia

A full reel of tape shall have a diameter between 87,45 mm and 91,19 mm.

The moment of inertia shall be

- Full reel: Between 131×10^{-6} g·m^2 and 160×10^{-6} g·m^2
- Empty reel: Between 19×10^{-6} g·m^2 and 23×10^{-6} g·m^2

10.9 Material

The cartridge can be made of any material as long as the requirements of this International Standard are met. For example, the hub and the case could be made of 10% glass-filled polycarbonate. A typical wall thickness is 1,5 mm.

The tape leader shall be made of a non-translucent material (see 7.20), for instance pigmented polyethylene terephthalate.

Copyright International Organization for Standardization
Provided by IHS under license with ISO
No reproduction or networking permitted without license from IHS
Not for Resale

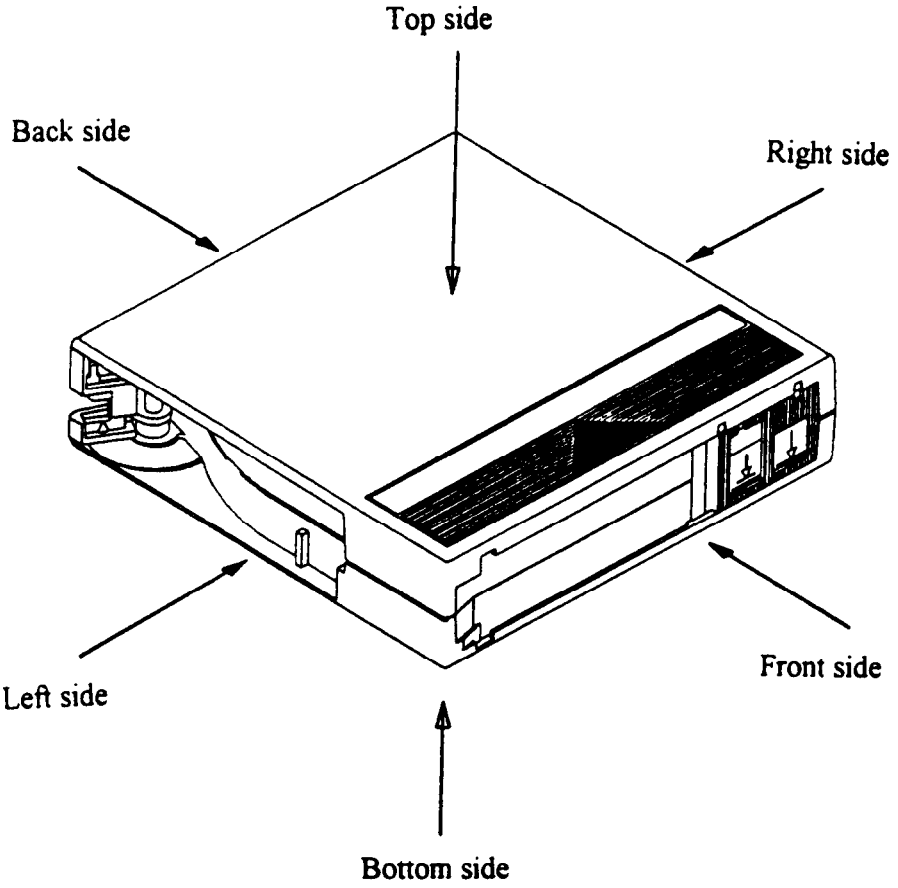

Figure 6 - General view

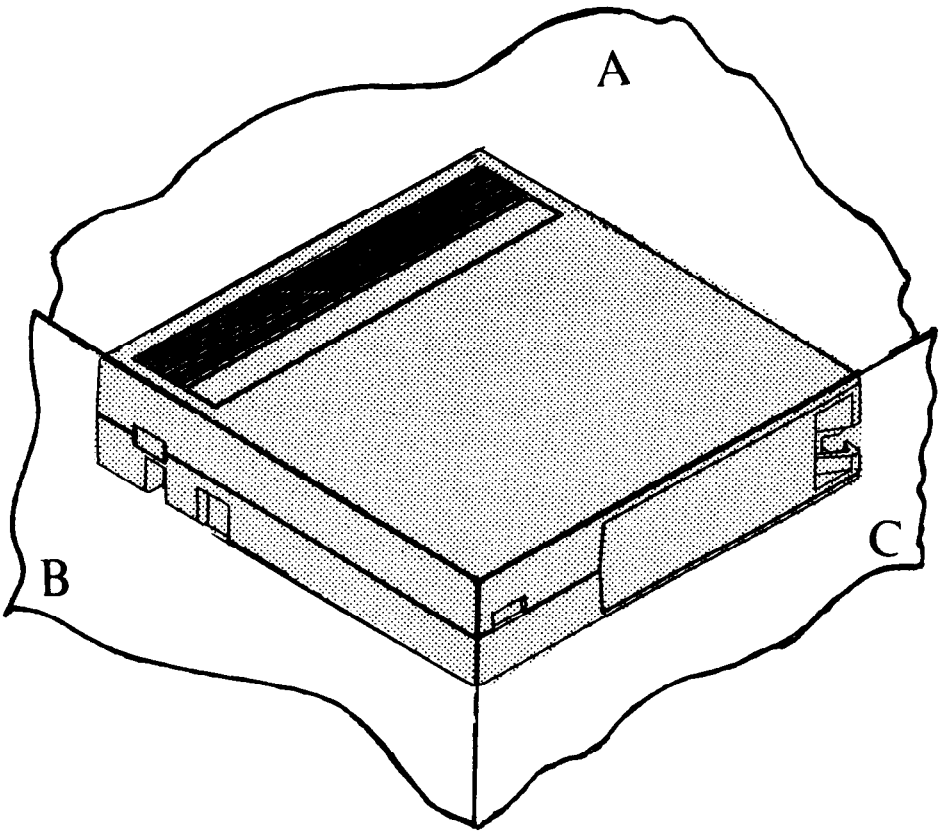

Figure 7 - Reference planes

Copyright International Organization for Standardization
Provided by IHS under license with ISO
No reproduction or networking permitted without license from IHS
Not for Resale

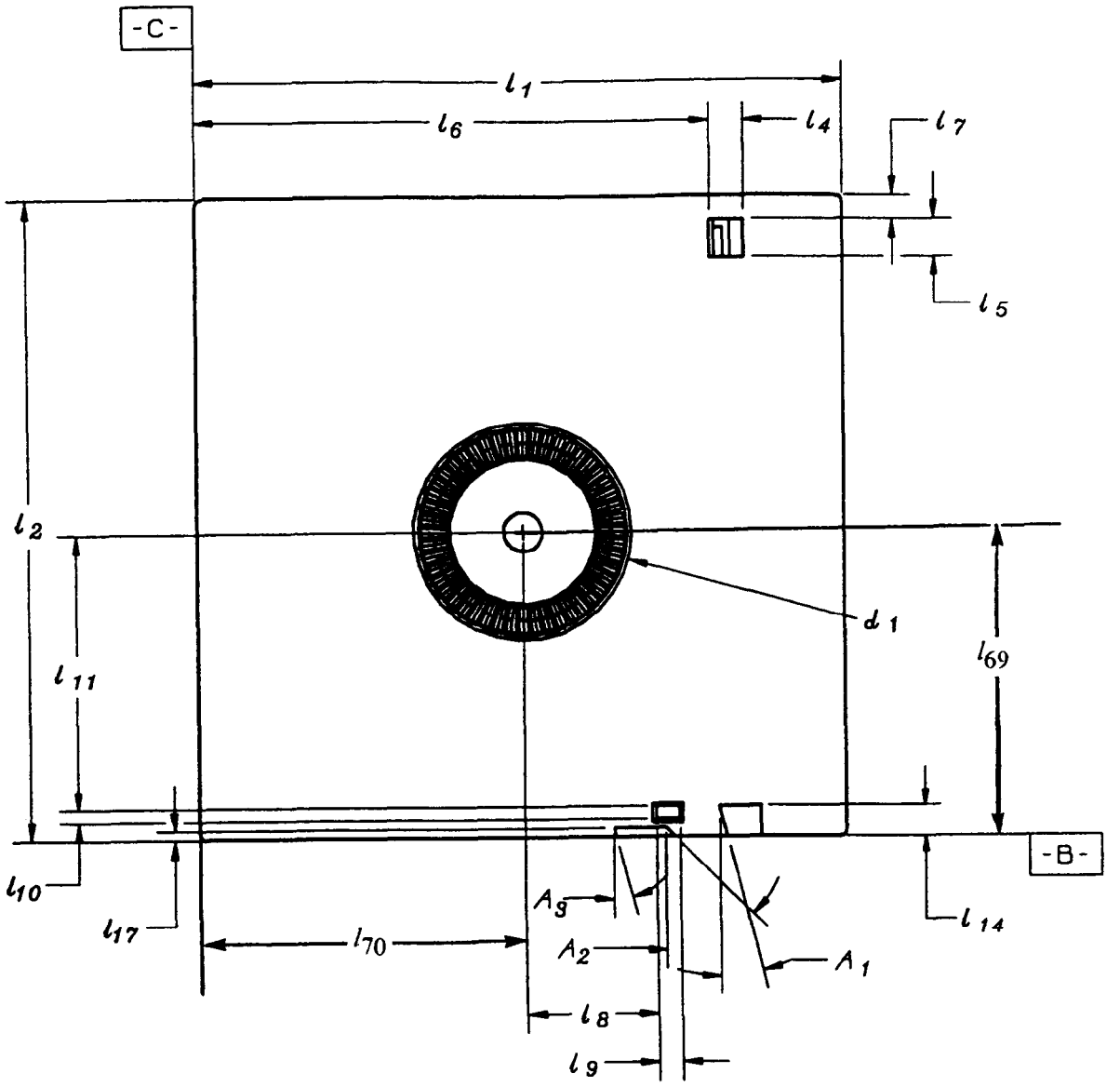

Figure 8 - Bottom side

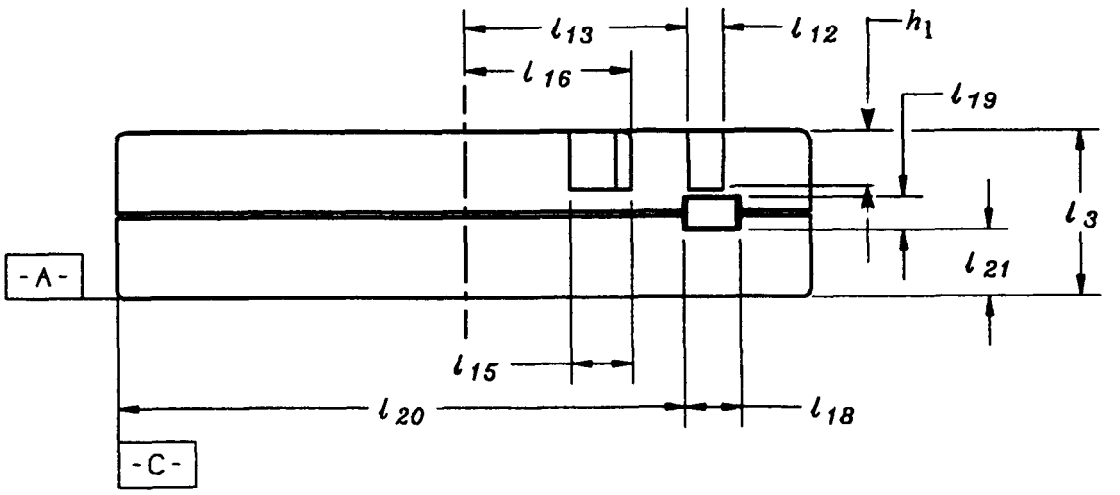

Figure 9 - Right side

Copyright International Organization for Standardization
Provided by IHS under license with ISO
No reproduction or networking permitted without license from IHS
Not for Resale

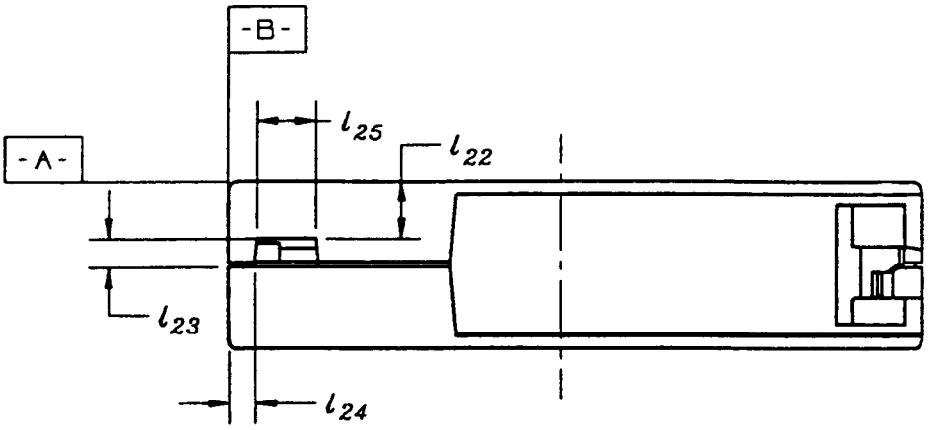

Figure 10 - Back side

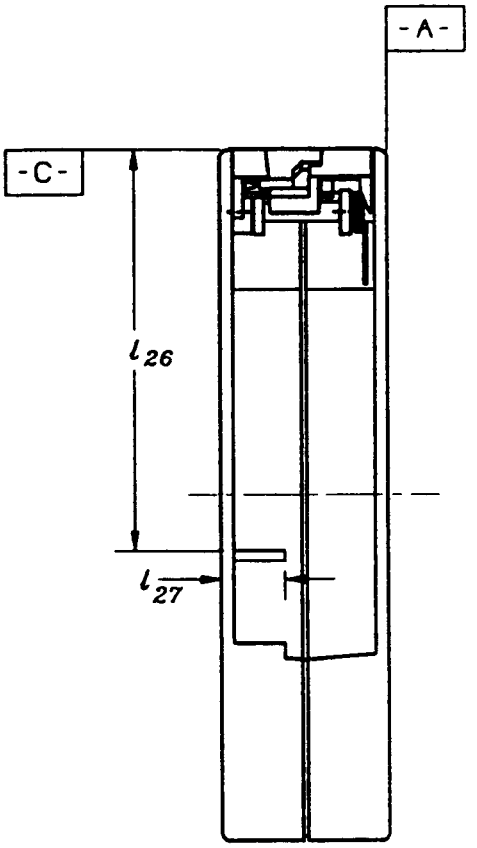

Figure 11 - Left side

Copyright International Organization for Standardization
Provided by IHS under license with ISO
No reproduction or networking permitted without license from IHS
Not for Resale

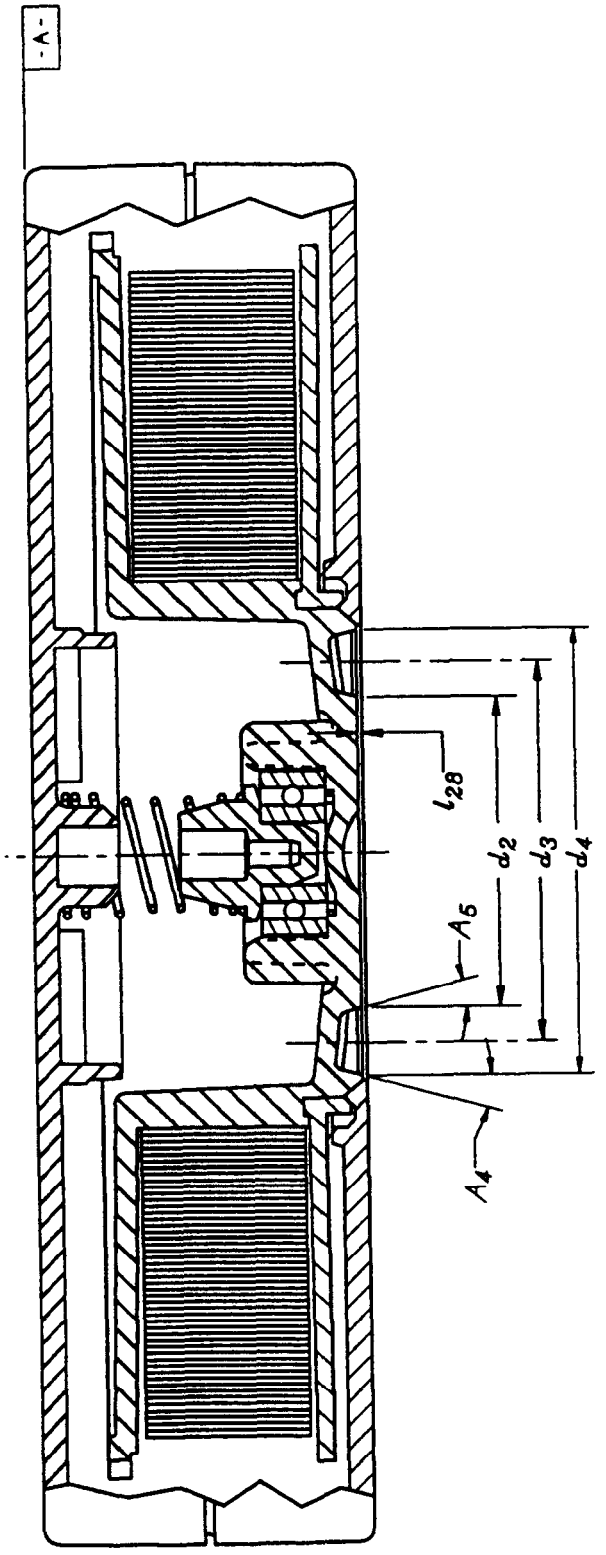

Figure 12 - Cross section, non-operating position

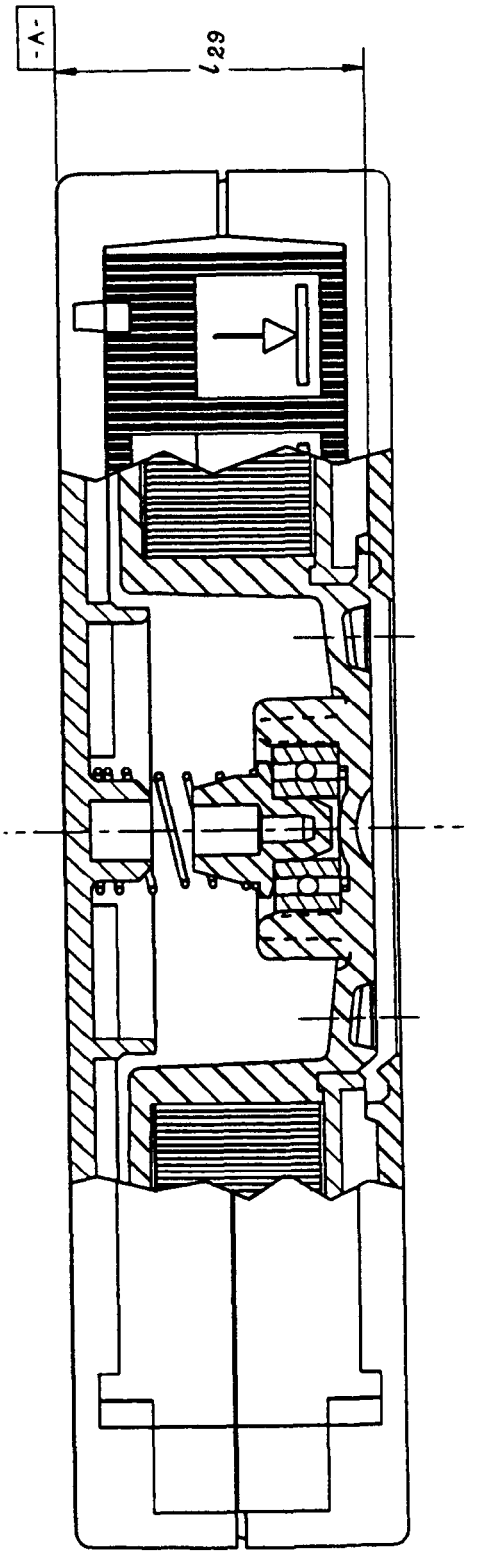

Figure 13 - Cross section, operating position

Copyright International Organization for Standardization
Provided by IHS under license with ISO
No reproduction or networking permitted without license from IHS
Not for Resale

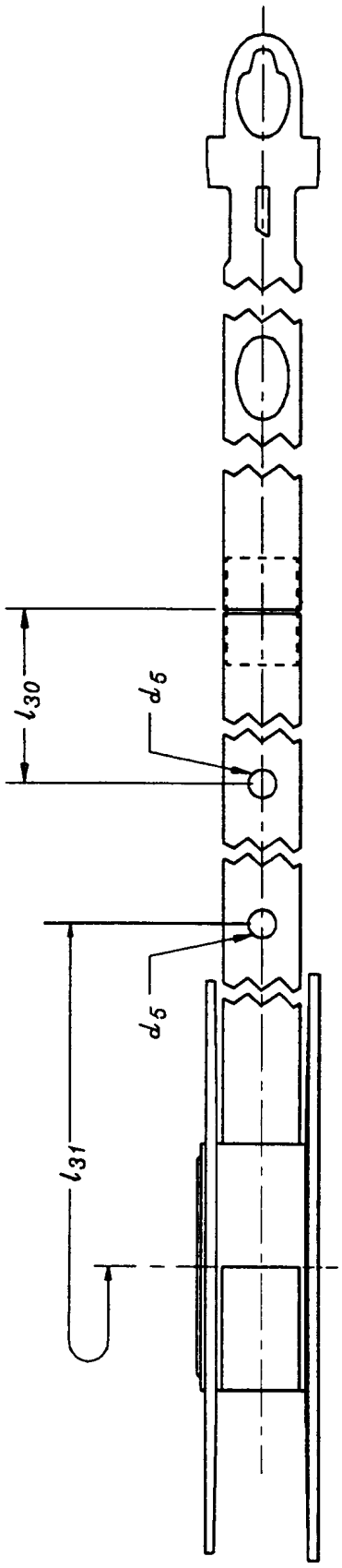

Figure 14 - Leader/tape connection

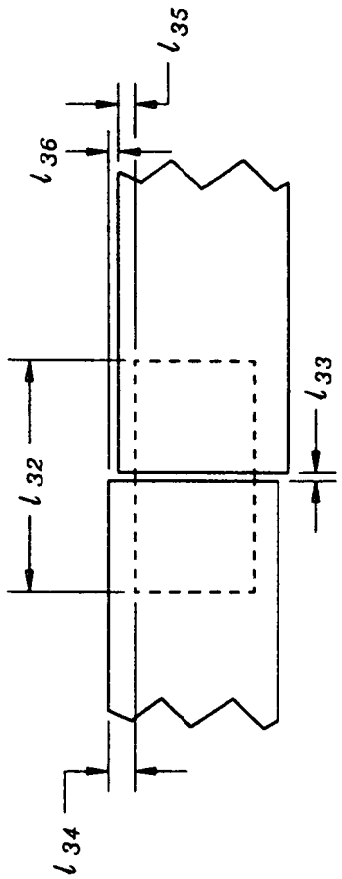

Figure 15 - Position of the splice tape

Copyright International Organization for Standardization
Provided by IHS under license with ISO
No reproduction or networking permitted without license from IHS
Not for Resale

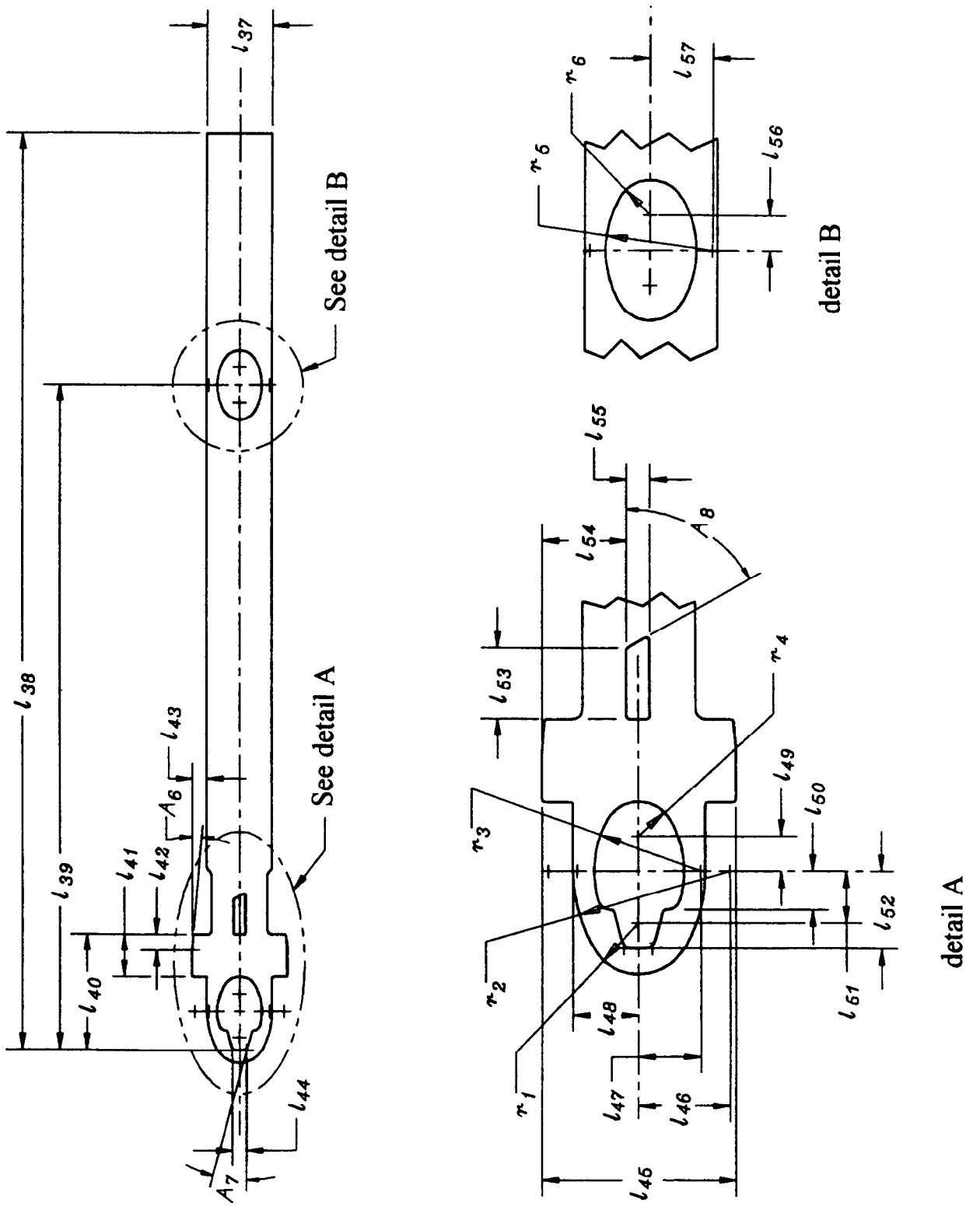

Figure 16 - Tape leader

Copyright International Organization for Standardization
Provided by IHS under license with ISO
No reproduction or networking permitted without license from IHS
Not for Resale

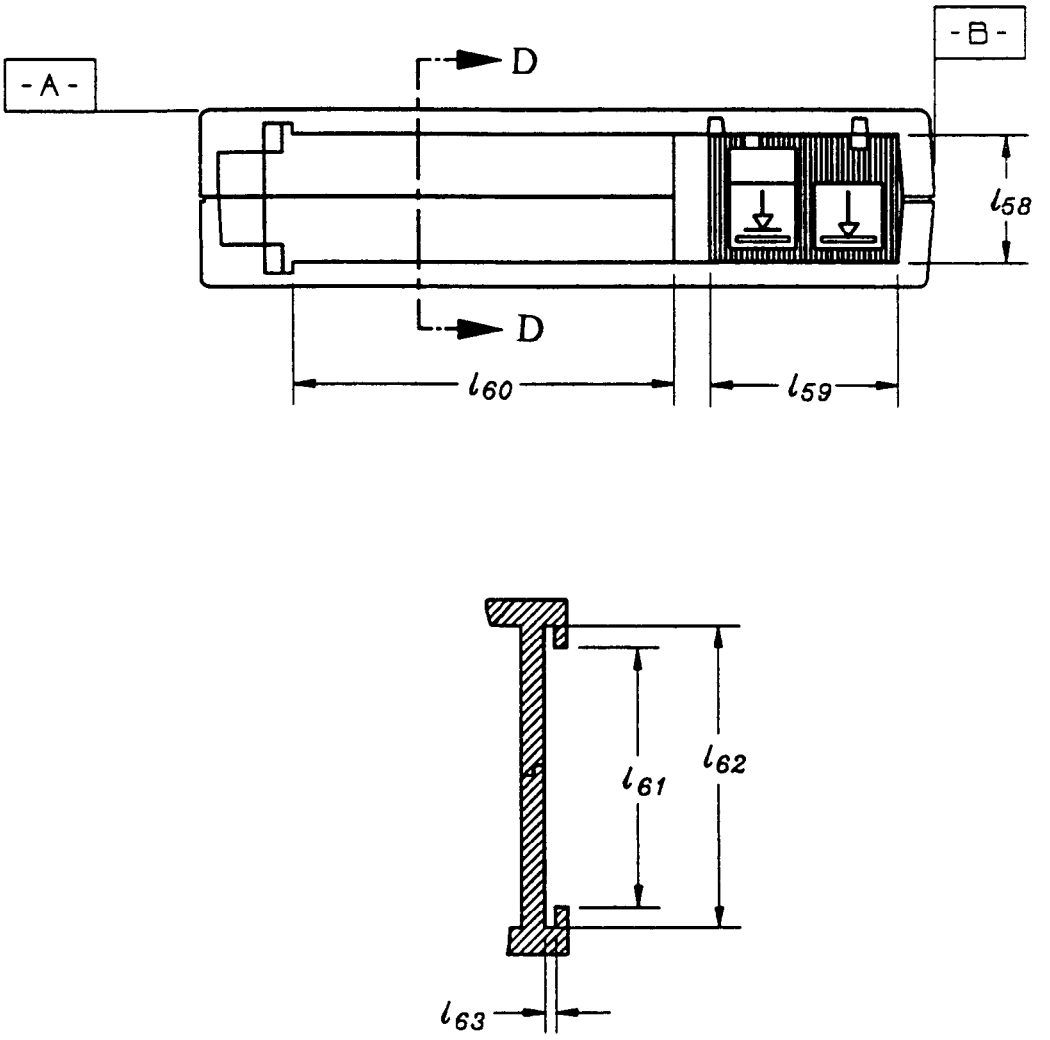

Section D - D

Figure 17 - Front side

Copyright International Organization for Standardization
Provided by IHS under license with ISO
No reproduction or networking permitted without license from IHS
Not for Resale

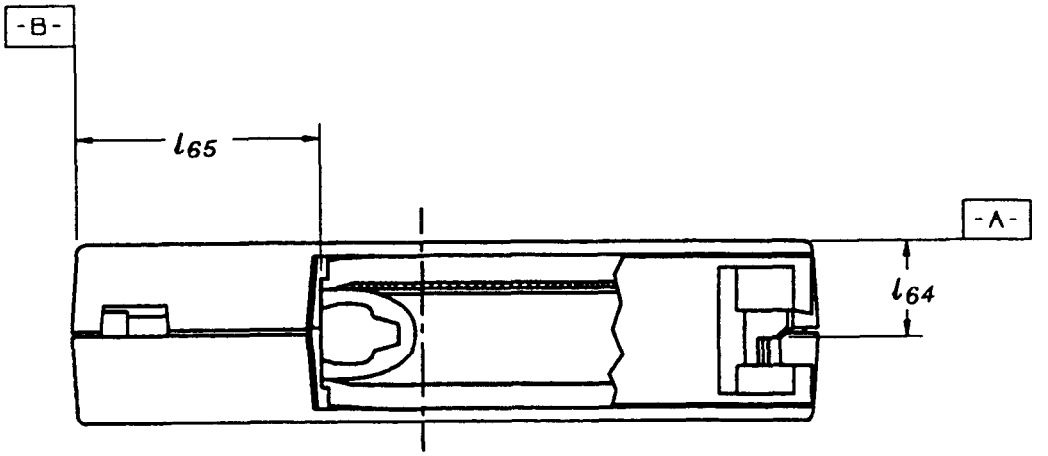

Figure 18 - Back side, position of the door lock

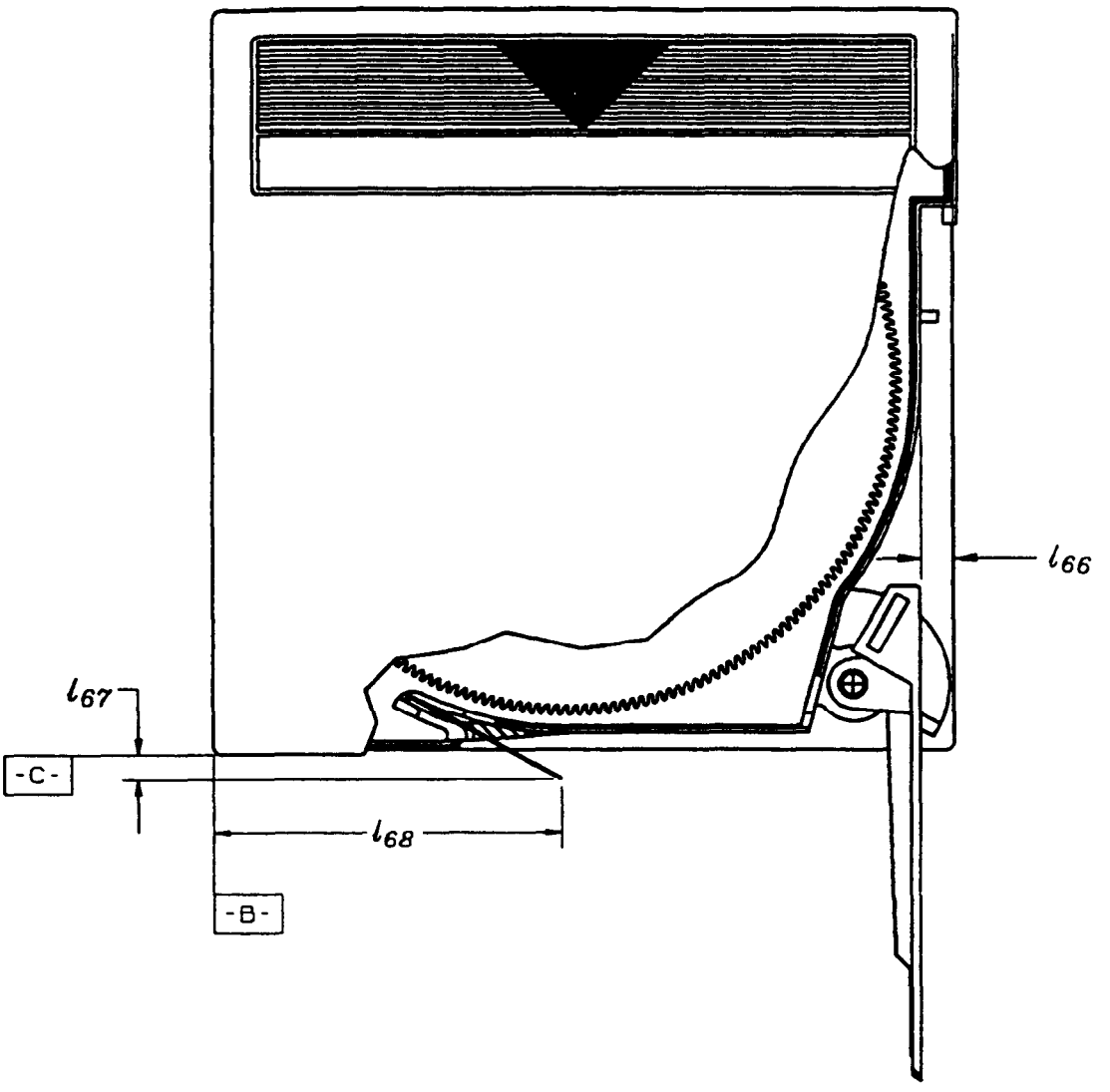

Figure 19 - Position of the leader tip

Copyright International Organization for Standardization
Provided by IHS under license with ISO
No reproduction or networking permitted without license from IHS
Not for Resale

Section 4 - Requirements for an interchanged tape

11 Method of recording

The method of recording shall be Modified Frequency Modulation (MFM) for which the conditions are:

- A flux transition shall be written at the centre of each bit cell containing a ONE;
- A flux transition shall be written at each cell boundary between consecutive bit cells containing ZEROs.

11.1 Physical recording density

The physical recording density for all ONEs or all ZEROs shall be: 1 674 ftpmm.

11.2 Bit cell length

The resulting nominal bit cell length is 0,598 μm.

11.2.1 Average bit cell length

The average bit cell length is the overall length of n bit cells divided by n.

11.2.2 Long-term average bit cell length

The long-term average bit cell length shall be the average bit cell length taken over a minimum of 1 000 000 bit cells. It shall be within 3 % of the nominal bit cell length.

11.2.3 Short-term average bit cell length

The short-term average bit cell length shall be the average taken over 10 bit cells. It shall be within ± 5 % of the nominal bit cell length.

11.3 Flux transition spacing

The spacings between flux transitions are influenced by the reading and writing processes, the recorded pattern (pulse crowding effect) and other factors.

The spacings between flux transitions of an interchanged cartridge shall be between (n-3) % and (n+3) % of that of the Master Standard Reference Tape when measured according to 8.5.

11.4 Read signal amplitude

The signal amplitude shall be measured at a point in the read channel where the signal is proportional to the rate of change of flux in the read head.

The Average Signal Amplitude of an interchanged cartridge shall be between 75 % and 125 % of the SRA.

Averaging for the interchanged cartridge may be segmented into blocks. No missing pulses shall occur within the measured area.

Traceability to the SRA is provided by the calibration factors supplied with each Secondary Standard Reference Tape.

11.5 Azimuth

The angular deviation of the recorded flux transitions from a line normal to the Reference Edge of the tape shall be less than 10 minutes of arc.

Copyright International Organization for Standardization
Provided by IHS under license with ISO
No reproduction or networking permitted without license from IHS
Not for Resale

11.6 Channel skew

The deviation between corresponding bits on the physical tracks of a logical track (see 12.5.3) shall not exceed 40 bit cell lengths.

12 Tape format

12.1 Reference Edge

The Reference Edge shall be the bottom edge when viewing the magnetic coating of the tape with the BOT to the left and the EOT to the right of the observer.

12.2 Direction of recording

Recording shall take place in two directions:

- forward: from BOT to EOT
- reverse: from EOT to BOT

12.3 Tape layout

The tape shall be partitioned into two areas:

- the Calibration and Directory Area,
- the Data Area.

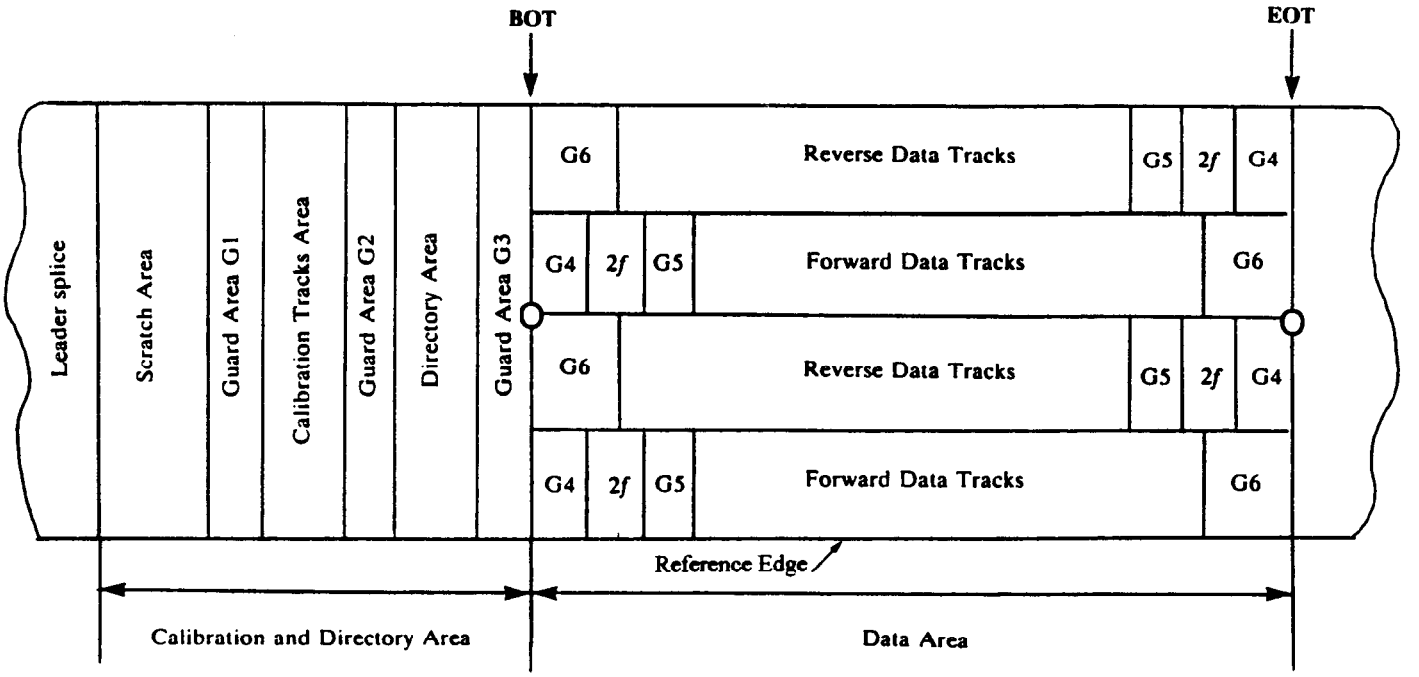

Figure 20 - Tape layout

Copyright International Organization for Standardization
Provided by IHS under license with ISO
No reproduction or networking permitted without license from IHS
Not for Resale

12.4 Calibration and Directory Area

The Calibration and Directory Area shall be partitioned as shown in figures 21 and 22. It shall extend from the leader splice to the BOT over 8 690 mm ± 150 mm and comprise the following zones.

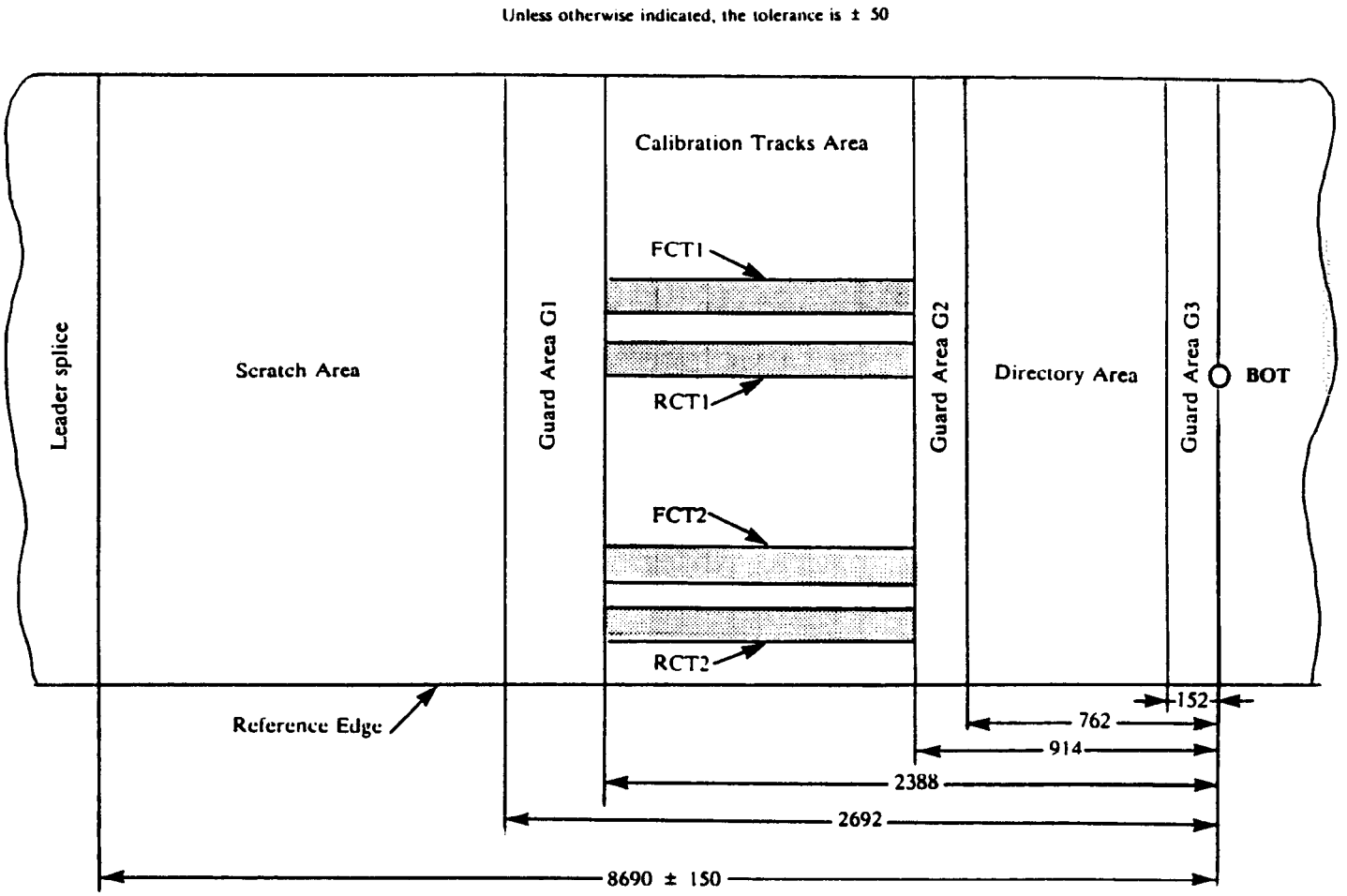

Figure 21 - Calibration and Directory Area

12.4.1 Scratch Area

The Scratch Area shall start at the leader splice and shall end at a distance of 2 692 mm ± 50 mm from the BOT. It is intended for use by the drive for setting gains, write current, etc.

12.4.2 Guard Area G1

Guard Area G1 shall start at the end of the Scratch Area and shall end at a distance of 2 388 mm ± 50 mm from the BOT.

12.4.3 Calibration Tracks Area

The Calibration Tracks Area shall start at the end of the Guard Area G1 and shall end at a distance of 914 mm ± 50 mm from the BOT.

The Calibration Tracks Area shall contain four Calibration Tracks the width of which shall be 0,215 9 mm ± 0,012 7 mm. They are defined as follows.

Copyright International Organization for Standardization
Provided by IHS under license with ISO
No reproduction or networking permitted without license from IHS
Not for Resale

Forward Calibration Track 2 (FCT2)

The centreline of FCT2 shall be at a distance of 2,432 mm ± 0,030 mm from the Reference Edge.

FCT2 shall be recorded with 2*f*, starting at the end of Guard Area G1 and ending at a distance of 2 108 mm ± 50 mm from the BOT. Following this section, FCT2 shall be recorded with 1*f* ending at a distance of 914 mm ± 50 mm from the BOT.

Forward Calibration Track 1 (FCT1)

The centreline of FCT1 shall be at a distance of 5,334 mm ± 0,030 mm from that of FCT2.

FCT1 shall be recorded as specified for FCT2.

Reverse Calibration Track (RCT2)

The centreline of RCT2 shall be at a distance of 1,330 mm ± 0,030 mm from the Reference Edge.

RCT2 shall be recorded with 2*f* starting at Guard Area G2 and ending at a distance of 1 219 mm ± 50 mm from the BOT. Following this section RCT2 shall be recorded with 1*f* ending at a distance of 2 388 mm ± 50 mm from the BOT.

Reverse Calibration Track 1 (RCT1)

The centreline of RCT1 shall be at a distance of 5,334 mm ± 0,030 mm from that of RCT2.

RCT1 shall be recorded as specified for RCT2.

Dimensions in millimetres

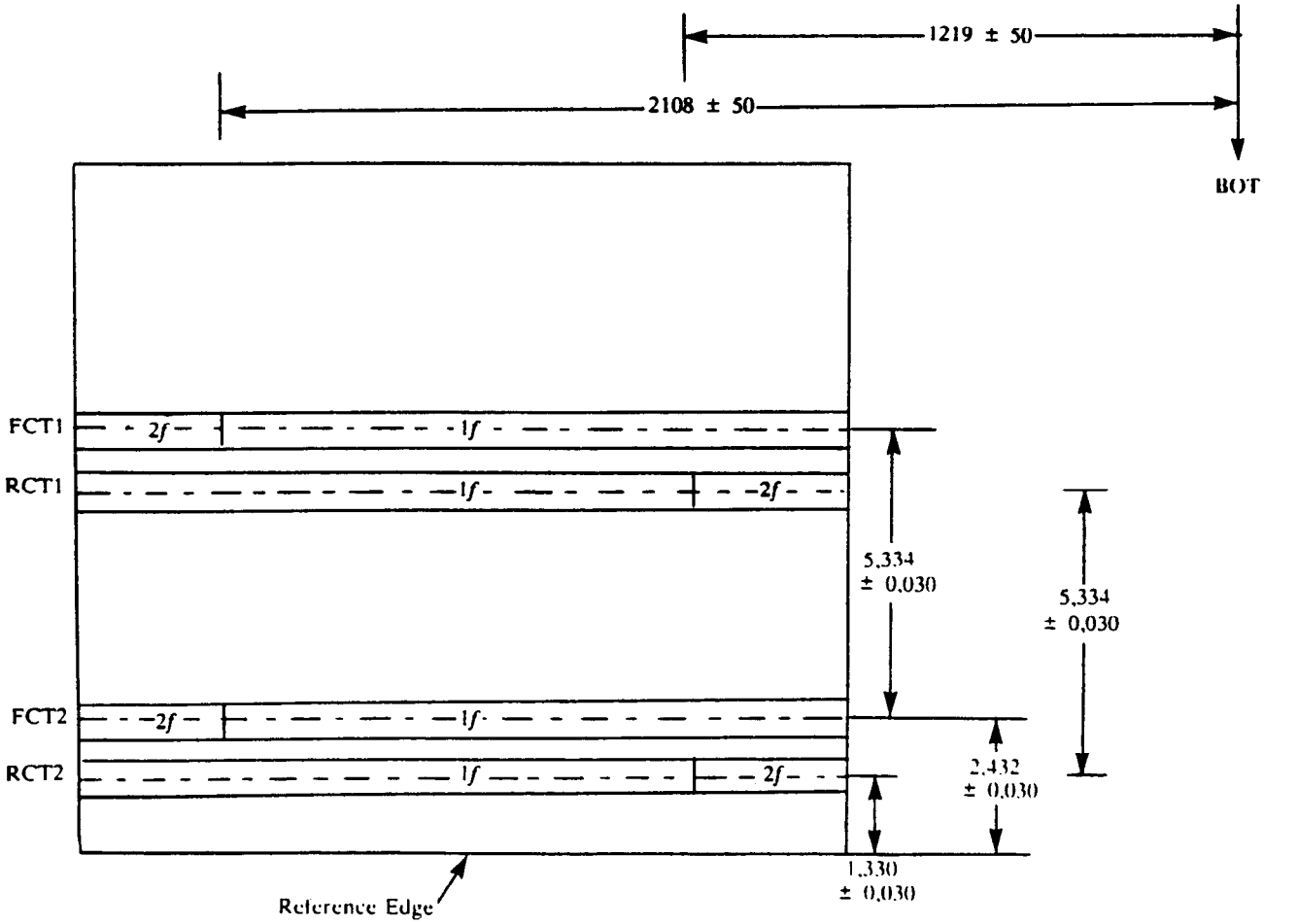

Figure 22 - Calibration Tracks Area

Copyright International Organization for Standardization
Provided by IHS under license with ISO
No reproduction or networking permitted without license from IHS
Not for Resale

12.4.4 Guard Area G2

Guard Area G2 shall start at the end of the Calibration Tracks Area and shall end at a distance of 762 mm ± 50 mm from the BOT.

12.4.5 Directory Area

The Directory Area shall start at the end of the Guard Area G2 and end at a distance of 152 mm ± 50 mm from the BOT. It shall be recorded on two physical tracks (see 12.5.1) having their centrelines 3,531 mm ± 0,030 mm above those of RCT1 and RCT2.

The Directory Area is intended for recording manufacturer's information about the recordings on the tape. This information shall be recorded in the reverse direction, starting at the end of Guard Area G3. The content of the Directory Area shall be ignored in interchange.

12.4.6 Guard Area G3

Guard Area G3 shall start at the end of the Directory Area and shall end at the BOT.

12.5 Data Area

The Data Area shall contain data which is transmitted by the host to the drive and recorded according to the format specified in clause 13. The quantity of recorded data may be such that the total capacity of the maximum number of physical tracks, viz. 48, is required in order to contain it. It may, under other circumstances, be less in which case fewer than 48 physical tracks will be required (see also 14.5). The following specifications are based on the former case.

12.5.1 Physical tracks

There shall be 48 physical tracks in the Data Area each identified by a Physical Track Number. Physical track No. 48 shall be that farthest from the Reference Edge and physical track No. 1 shall be that nearest to the Reference Edge.

12.5.2 Width of the physical tracks

The width of a physical track shall be 0,215 9 mm ± 0,012 7 mm.

12.5.3 Logical tracks

A logical track shall consist of two physical tracks the Physical Track Numbers of which are m and m+24, where: $1 \leq m \leq 24$ (see table 1).

The two tracks of a logical track shall be recorded simultaneously.

Logical tracks are identified by a Logical Track Number from 0 to 23.

Logical tracks with an even Logical Track Number shall be recorded in the forward direction.

Logical tracks with an odd Logical Track Number shall be recorded in the reverse direction.

12.5.4 Locations of the physical tracks

The locations of the centrelines of the physical tracks are related to those of the centrelines of the Calibration Tracks.

The locations of the physical tracks of logical tracks with an even Logical Track Number shall be related to those of FCT1 and FCT2.

The locations of the physical tracks of logical tracks with an odd Logical Track Number shall be related to those of RCT1 and RCT2.

Copyright International Organization for Standardization
Provided by IHS under license with ISO
No reproduction or networking permitted without license from IHS
Not for Resale

The positions of the centrelines of the physical tracks relative to those of the Calibration Tracks shall be as specified in table 1. A positive offset indicates that the physical track is above the referenced Calibration Track, a negative offset that it is below the referenced Calibration Track.

Table 2 - Physical Track Locations

Physical Track Number	Logical Track Number	Calibration track	Offset Tolerance: ± 0,013
48	23		4,826
47	21		4,610
46	19		4,394
45	17		4,178
44	15	RCT1	3,962
43	13		3,747
42	1		3,331
41	3		3,315
40	5		3,099
39	7		2,883
38	9		2,667
37	11		2,451
36	10		1,080
35	8		0,864
34	6		0,648
33	4		0,432
32	2	FCT1	0,216
31	0		0,000
30	12		- 0,216
29	14		- 0,432
28	16		- 0,648
27	18		- 0,864
26	20		- 1,080
25	22		- 1,295

Copyright International Organization for Standardization
Provided by IHS under license with ISO
No reproduction or networking permitted without license from IHS
Not for Resale

Table 2 - *(concluded)*

Physical Track Number	Logical Track Number	Calibration track	Offset Tolerance: ± 0,013
24	23		4,826
23	21		4,610
22	19		4,394
21	17		4,178
20	15	RCT2	3,962
19	13		3,747
18	1		3,531
17	3		3,315
16	5		3,099
15	7		2,883
14	9		2,667
13	11		2,451
12	10		1,080
11	8		0,864
10	6		0,648
9	4		0,432
8	2		0,216
7	0	FCT2	0,000
6	12		- 0,216
5	14		- 0,432
4	16		- 0,648
3	18		- 0,864
2	20		- 1,080
1	22		- 1,295

Copyright International Organization for Standardization
Provided by IHS under license with ISO
No reproduction or networking permitted without license from IHS
Not for Resale

12.5.5 Layout of tracks in the Data Area

The layout of tracks in the Data Area shall be as shown in figure 23.

Dimensions in millimetres

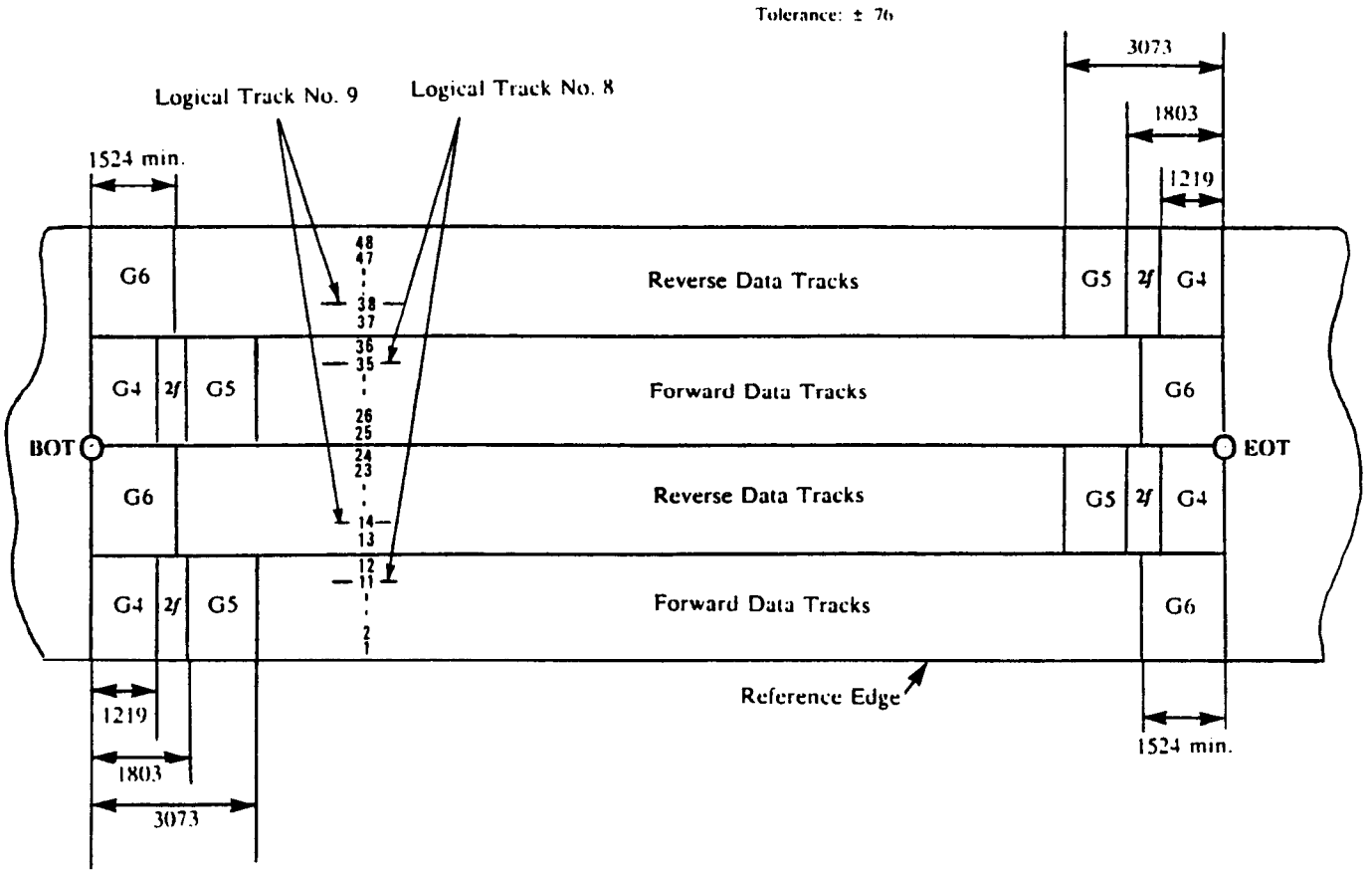

Figure 23 - Layout of the tracks of the Data Area

12.5.5.1 Forward tracks

The layout of tracks recorded in the forward direction, i.e. all pairs of physical tracks forming the logical tracks having an even Logical Track Number, shall be as follows.

Guard Area G4

Guard Area G4 shall start at the BOT and end at a distance of 1 219 mm ± 76 mm from the BOT.

***2f* Zone**

The track shall be recorded with *2f* starting at Guard Area G4 and ending at a distance of 1 803 mm ± 76 mm from the BOT.

Guard Area G5

Guard Area G5 shall start at the *2f* Zone and end at a distance of 3 073 mm ± 76 mm from the BOT.

Guard Area G6

The track shall end with a Guard Area G6 which shall start at a distance of 1 524 mm min. from the EOT and end at the EOT.

Copyright International Organization for Standardization
Provided by IHS under license with ISO
No reproduction or networking permitted without license from IHS
Not for Resale

12.5.5.2 Reverse tracks

The layout of tracks recorded in the reverse direction, i.e. all pairs of physical tracks forming logical tracks with an odd Logical Track Number, shall be as follows.

Guard Area G4

This Guard Area G4 shall start at the EOT and end at a distance of 1 219 mm ± 76 mm from the EOT.

***2f* Zone**

The track shall be recorded at the physical recording density of *2f* starting at Guard Area G4 and ending at a distance of 1 803 mm ± 76 mm from the EOT.

Guard Area G5

This Guard Area G5 shall start at the *2f* Zone and end at a distance of 3 073 mm ± 76 mm from the EOT.

Guard Area G6

The track shall end with a Guard Area G6 which shall start at a distance of 1 524 mm min. from the BOT and end at the BOT.

13 Data format

The host transmits to the drive data in the form of Records, each comprising one or more 8-bit bytes the interpretation of which is outside the scope of this International Standard and is a matter of agreement between sender and recipient of the data.

The maximum size of a Record permitted by the format is $2^{20} - 1$ bytes.

NOTE 8 - Known devices using this format support a Record size of 2^{16} bytes maximum. Longer Record sizes require agreement between sender and recipient of the data.

13.1 Data Bytes

Data Bytes shall be either User Bytes transmitted by the host or Pad Bytes. Pad Bytes are bytes set to all ZEROs.

13.2 Logical Blocks

A Logical Block shall consist of the two physical blocks recorded simultaneously on the physical tracks of a logical track.

13.3 Data Blocks

After having been received from the host, each Record shall be arranged in groups of 4 096 Data Bytes. Where required, Pad bytes shall be added at the end of the Record up to the next 4 096-byte boundary. Thus, each Record shall start at a 4 096-byte boundary. Each such group shall then be split into two sets of 2 048 bytes. To each of these 2 048-byte sets the following elements shall be added:

- a Preamble (see 13.6.1)
- a Sync (see 13.6.2)
- 8 EDC Bytes (see 13.6.3)
- a Control Field 1 (see 13.6.4)
- a Control Field 2 (see 13.6.5)
- a CRC (see 13.6.6)
- a Postamble (see 13.6.7)

Copyright International Organization for Standardization
Provided by IHS under license with ISO
No reproduction or networking permitted without license from IHS
Not for Resale

The first 2 048 bytes together with these 7 elements form a first physical block which is recorded on that physical track of a logical track having the higher Physical Track Number.

The next 2 048 bytes together with the same 7 elements form a second physical block which is recorded on the other physical track of the same logical track.

The two physical blocks thus described form together a Logical Block of the type called a Data Block. All elements added to both physical blocks of a Data Block shall be identical, except the CRC which is computed individually for each physical block, and the EDC which may be different depending on the data.

13.4 Types of Logical Blocks

There are six types of Logical Blocks:

Data Blocks (see 14.1)
Tape Mark Blocks (see 14.2)
Filler Blocks (see 14.3)
End of Track Blocks (EOTR) (see 14.4)
End of Data Blocks (EOD) (see 14.5)
ECC Blocks (see 14.6)

13.5 Entities

Logical Blocks, except EOTR and EOD Blocks (see clause 15), shall be recorded in Entities. Each Entity shall comprise 10 Logical Blocks recorded on the same logical track.

Each physical block of a Logical Block shall be preceded by a gap consisting of a d.c. erased portion of tape of length 2,100 mm ± 0,042 mm, in which the read signal is less than 5 % of the Average Signal Amplitude.

The format of Entities is specified in clause 15.

13.6 Logical Block format

Both physical blocks of a Logical Block shall have the format shown in figure 24, except those of ECC Blocks (see 14.6).

Copyright International Organization for Standardization
Provided by IHS under license with ISO
No reproduction or networking permitted without license from IHS
Not for Resale

Number of bytes	Field Name	
35	Preamble	
1	Sync	
512	Data	Data Field
2	EDC	
512	Data	
2	EDC	
512	Data	
2	EDC	
512	Data	
2	EDC	
12	Control Field 1	
8	Control Field 2	
8	CRC	
32	Postamble	

Figure 24 - Block format

13.6.1 Preamble

This field shall be set to 280 ONEs.

13.6.2 Sync

This field shall be set to 0110 1111. It indicates that the next byte is the first byte of the Data Field.

13.6.3 Data Field

The Data Field of a physical block shall comprise 2 056 bytes.

In Data Blocks these bytes are arranged in four groups of 512 Data Bytes, each followed by 2 EDC bytes.

The content of the Data Fields of the physical blocks of other types of Logical Blocks is described in the specification of these other Logical Blocks.

The EDC bytes shall be computed as follows.

Each EDC character is a 16-bit word computed over 256 16-bit Data Words formed from the previous 512 Data Bytes. The first Data Byte constitutes the least significant part of the first Data Word, the second Data Byte constitutes its most significant part, and so on. With these 256 Data Words identified by $1 \leq i \leq 256$, the EDC word is obtained by the following algorithm.

Set EDC_o to (0045)
Set EDC_i to $EDC_{i-1} \oplus (\text{Data Word})_i$
Shift EDC_i leftwards by one bit position, with the most significant bit moved to the least significant bit position

where: $\oplus$ stands for Exclusive OR.

Copyright International Organization for Standardization
Provided by IHS under license with ISO
No reproduction or networking permitted without license from IHS
Not for Resale

This algorithm yields EDC_{256} which is the 16-bit pattern recorded in the Data Field.

13.6.4 Control Field 1 (CF1)

CF1 is a 64-bit field. It specifies attributes of a Logical Block, thus both physical blocks of a Logical Block have an identical CF1.

The content of CF1 shall be as shown in figure 25. When recorded on the tape, this field shall be formatted as specified by annex D.

Name of the field	Number of bits
Block Type	3
Last Block	1
Early Warning	1
EDC Check	1
Tape Mark	25
Logical Block Number	7
Object Number	25
Reserved	7
Record Byte Count	20
Format	**6**

Figure 25 - Content of Control Field 1

This format is not applicable to ECC Blocks (see 14.6)

13.6.4.1 Reserved field

The bits in the Reserved field shall be set to all ZERO.

13.6.4.2 Block Type

This field specifies the type of the Logical Block as a 3-bit pattern.

Bit pattern	Type of the Logical Block
000	Filler Block
001	Data Block
010	Tape Mark
011	End of Track Block
100	End of Data Block

Other settings are not permitted by this International Standard.

Copyright International Organization for Standardization
Provided by IHS under license with ISO
No reproduction or networking permitted without license from IHS
Not for Resale

13.6.4.3 Last Block

This bit shall be set to ONE in the last Logical Block of a Record, else it shall be set to ZERO.

13.6.4.4 Early Warning (EW)

On logical tracks No. 0 to No. 22 the EW bit shall be set to ZERO. On logical track No. 23 it shall be set to ZERO until the EW signal has been generated. After this signal it shall be set to ONE in all remaining Logical Blocks of that logical track.

On Forward Data Tracks the EW signal shall be generated at least at 1 650 mm from the EOT. On Reverse Data Tracks the EW signal shall be generated at least at 1 650 mm from the BOT.

13.6.4.5 EDC Check

This bit shall be set to ONE.

13.6.4.6 Tape Mark

These 25 bits shall be set to ZERO for all Logical Blocks prior to the first Tape Mark Block.

For a Tape Mark Block, this field shall specify in binary notation its ordinal number, starting with 1 for the first Tape Mark Block recorded on the tape, and incremented by 1 for each Tape Mark Block.

For Data Blocks this field shall specify in binary notation the ordinal number of the previous Tape Mark Block.

For Filler Blocks, EOTR and EOD Blocks, this field shall be set to all ZEROs.

13.6.4.7 Logical Block Number

This field shall specify in binary notation the ordinal number of each Data Block which contains a whole or a part of a Record, starting with 0 and incremented by 1 for every successfully written Data Block of the Record.

This field shall be set to all ZEROs in Filler Blocks and in Tape Mark Blocks.

The content of this field in EOTR and EOD Block is not specified by this International Standard and shall be ignored in interchange.

13.6.4.8 Object Number

This field is a count of all Records and Tape Mark Blocks on the tape, starting with 1 and incremented by 1 for each Record and each Tape Mark Block. This count shall include the object in which it is recorded.

This field shall be set to all ZEROs in Filler Blocks.

The content of this field in EOTR and EOD Blocks is not specified by this International Standard and shall be ignored in interchange.

13.6.4.9 Record Byte Count

This field shall specify in binary notation the number of User Bytes in a Record. This number shall be the same in all Data Blocks of the Record.

This field shall be set to all ZEROs in Filler Blocks and in Tape Mark Blocks.

The content of this field in EOTR and EOD Blocks is not specified by this International Standard and shall be ignored in interchange.

13.6.4.10 Format

This field shall be set to 000000.

Copyright International Organization for Standardization
Provided by IHS under license with ISO
No reproduction or networking permitted without license from IHS
Not for Resale

13.6.5 Control Field 2 (CF2)

CF2 is a 64-bit field. It specifies further attributes of a Logical Block and of the Entity in which it is recorded, thus both physical blocks of a Logical Block have an identical CF2.

The content of CF2 shall be as shown in figure 26. When recorded on the tape, this field shall be formatted as specified by annex E.

Name of the field	Number of bits
Entity Control	8
Entity Offset	4
LEOT	1
Block Offset	19
Entity Number	16
Random Tag	6
Fixed Tag	3
K bit	1
Logical Track Number	6

Figure 26 - Content of Control Field 2

13.6.5.1 Entity Control

This field shall be set to 8 bits identical with the first 8 bits of the Block Offset field (see 13.6.5.4).

The content of this field in EOTR and EOD Blocks is not specified by this International Standard and shall be ignored in interchange.

13.6.5.2 Entity Offset

This field shall specify in binary notation the ordinal number of the successfully written Logical Blocks within an Entity. This count shall start with 1 and be incremented by 1 for each successfully written Logical Block.

This field shall be set to 1111 for EOD and EOTR Blocks.

13.6.5.3 Logical End of Tape (LEOT)

This bit shall be set to ZERO until two consecutive Tape Mark Blocks are written on the tape. Starting with the second of these Tape Mark Blocks, this bit shall be set to ONE in all following Logical Blocks on the tape.

13.6.5.4 Block Offset

This field shall specify in binary notation the ordinal number of the Logical Block, starting with 0, and incremented by 1 for each Logical Block recorded on the same logical track.

Copyright International Organization for Standardization
Provided by IHS under license with ISO
No reproduction or networking permitted without license from IHS
Not for Resale

13.6.5.5 Entity Number

This field shall specify the ordinal number of the Entity, starting with 1, and incremented by 1 for each Entity recorded on the same logical track.

In EOD and EOTR Blocks, this field shall specify the Entity Number of the last Entity recorded.

13.6.5.6 Random Tag

This field shall specify in binary notation a pseudo-random number. This number provides an additional check capability by comparing the value obtained by the read-while-write process with the pseudo-random number generated. This field shall be ignored in interchange.

13.6.5.7 Fixed Tag

This field shall be set to 011.

13.6.5.8 K Bit

For all Logical Blocks, this bit shall be set to ONE if the preceding Logical Block was in error. Else this bit shall be set to ZERO.

13.6.5.9 Logical Track Number

This field shall specify in binary notation the Logical Track Number (from 0 to 23) on which the Logical Block is recorded.

13.6.6 CRC

This field shall contain the 64-bit CRC. The CRC is computed over the 2 076 bytes of the Data Field, CF1 and CF2. The algorithm for the CRC shall be as specified in annex C.

13.6.7 Postamble

This field shall contain the bit pattern 0101 0101 recorded 32 times.

14 Use of Logical Blocks

14.1 Data Blocks

Data Blocks shall contain User Bytes. Any byte position of the Data Field of either physical block not used for User Data or EDC bytes shall contain a Pad Byte.

14.2 Tape Mark Blocks

Tape Mark Blocks are intended for use as separators.

The Data Field of Tape Mark Blocks shall be ignored in interchange.

14.3 Filler Blocks

Filler Blocks shall be used only to complete an Entity (see 15).

The four groups of 512 bytes in the Data Field of Filler Blocks shall be set to all ZEROs.

Copyright International Organization for Standardization
Provided by IHS under license with ISO
No reproduction or networking permitted without license from IHS
Not for Resale

14.4 End of Track Blocks (EOTR)

If after completion of the last Entity on a logical track more data is to be recorded on the next logical track, then and only then, at least 11 EOTR Blocks shall be recorded after this last Entity on the logical track, else EOD Blocks (see 14.5) shall be recorded.

The Data Field of an EOTR Block shall be ignored in interchange.

14.5 End of Data Blocks (EOD)

At least 11 EOD Blocks shall be recorded to indicate the end of the data recorded on the tape.

The Data Field of an EOD Block shall be ignored in interchange.

14.6 ECC Blocks

The bytes of the four ECC Blocks shall be computed over the 2 056 bytes of the Data Field and the 12 bytes of CF1 of the preceding 16 physical blocks of an Entity. In case a number of physical blocks have the same value recorded in the Entity Offset field of their CF2, the ECC shall be computed only over that physical block with the highest value in its Block Offset field amongst those with the same value in their Entity Offset field. The 2 068 ECC bytes shall be recorded in byte positions 37 to 2 105, thus ECC Blocks have no CF1.

The CF2 of ECC Blocks shall be as specified in 13.6.5.

The ECC Blocks shall be completed by a CRC computed as specified in 13.6.6.

Annex C specifies how the ECC bytes shall be computed.

15 Format of Entities

The 20 physical blocks of each Entity shall be numbered consecutively from 1 to 20.

Physical blocks with an odd number shall be recorded on the physical track with the higher Physical Track Number, physical blocks with an even number shall be recorded on the other physical track of the logical track.

- Physical block 17 shall be the ECC1 block
- Physical block 18 shall be the ECC2 block
- Physical block 19 shall be the ECC3 block
- Physical block 20 shall be the ECC4 block.

Where required, Filler Blocks are added to complete the last Entity recorded. After the next write command from the host, the recording shall commence immediately after the last Data Block preceding the first or sole Filler Block, i.e. the Filler Block(s) and the ECC Blocks are then overwritten.

EOTR and EOD Blocks are not part of Entities.

16 Error handling

If an error is detected when recording a Data Block n prior to the completion of the recording of Data Block n+1, then Data Block n and Data Block n+1 shall be re-written in the same sequence as originally recorded. Data Block n+2 shall not be recorded before Data Block n and Data Block n+1 have been correctly recorded.

Copyright International Organization for Standardization
Provided by IHS under license with ISO
No reproduction or networking permitted without license from IHS
Not for Resale

--`,,```,,,,````-`-`,,`,,`,`,,`---

Copyright International Organization for Standardization
Provided by IHS under license with ISO
No reproduction or networking permitted without license from IHS
Not for Resale

Annex A

(normative)

Measurement of light transmittance

A.1 Introduction

The following description outlines the general principle of the measuring equipment and measuring method to be applied when measuring the light transmittance of the tape.

For the purpose of this International Standard light transmittance is defined by convention as the relationship between the reading obtained from the measuring equipment with the test piece inserted and the reading obtained when no test piece is present. The transmittance value is expressed as the percentage ratio of the two readings. The requirement of a value of less than 5 % shall be met for the two wavelengths specified in A.2.1.

A.2 Description of the measuring equipment

The equipment shall comprise:

- the radiation source,
- the radiation receiver,
- the measuring mask,
- the optical path,
- the measuring circuitry.

A.2.1 Radiation source

Two infra-red light-emitting diodes (LED) with the following parameters shall be used successively:

LED No. 1

Wavelength at peak emission : 750 nm ± 50 nm
Half-power bandwidth : ± 50 nm

LED No. 2

Wavelength at peak emission : 1050 nm ± 50 nm
Half-power bandwidth : ± 50 nm

A.2.2 Radiation receiver

A flat silicon photo diode shall be used. It shall be operated in the short-circuit mode.

A.2.3 Measuring mask

The measuring mask shall have a thickness of 2 mm and a circular aperture of diameter d such that the area is 80 % to 100 % of the active area of the photo diode.

The surface of the mask shall be mat black.

The test piece shall be held firmly against the mask to cover the aperture and to ensure that no ambient light leaks past.

Copyright International Organization for Standardization
Provided by IHS under license with ISO
No reproduction or networking permitted without license from IHS
Not for Resale

A.2.4 Optical path (figure B.1)

The optical path shall be perpendicular to the mask. The distance L from the emitting surface of the LED to the mask shall be

$$L = \frac{d}{2 \tan \alpha} \text{ mm}$$

where α is the angle where the relative intensity of the LED is not less than 95 % of the maximum intensity of the optical axis.

A.2.5 Finish

The whole assembly shall be enclosed in a mat black case.

A.2.6 Measuring circuitry (figure A.2)

The components of the measuring circuitry are

E	: regulated power supply with variable output voltage
R	: current-limiting resistor
LED	: light-emitting diode
Di	: silicon photo diode
A	: operational amplifier
R_{f0}, R_{f1}	: feedback resistors
S	: gain switch
V	: voltmeter

The forward current of the LED, and consequently its radiation power, can be varied by means of the power supply E.

Di is operating in the short circuit mode.

The output voltage of the operational amplifier is given by

$V_0 = I_k \times R_f$ where I_k is the short-circuit current of Di.

The output voltage is therefore a linear function of the light intensity.

R_{f0} and R_{f1} shall be low temperature-drift resistors with an accuracy of 1 %.

The following ratio applies:

$$\frac{R_{f0}}{R_{f1}} = \frac{1}{20}$$

A.3 Measuring method

Set switch S to position 0.

With no test piece mounted, vary the supply voltage of E until voltmeter V reads full scale (100 %).

Mount a test piece of magnetic tape on the mask. Set switch S to position 1. Full deflection of the voltmeter now represents a light transmittance of 5 %.

Apply the method twice, once with LED No. 1 and once with LED No. 2.

Copyright International Organization for Standardization
Provided by IHS under license with ISO
No reproduction or networking permitted without license from IHS
Not for Resale

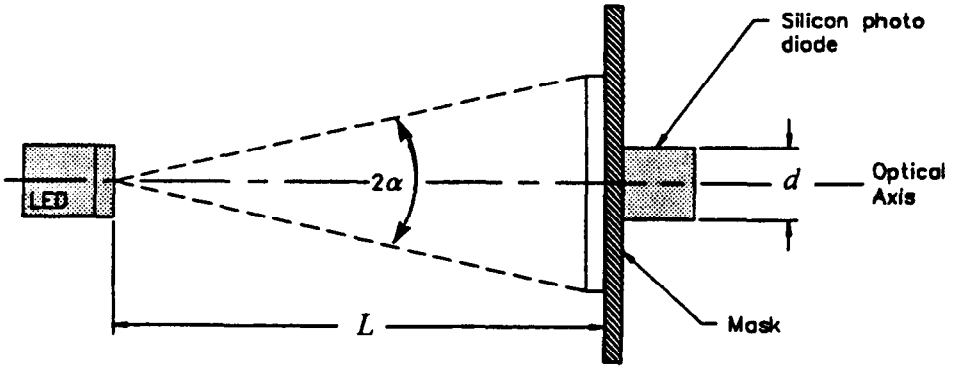

Figure A.1 - Optical arrangement

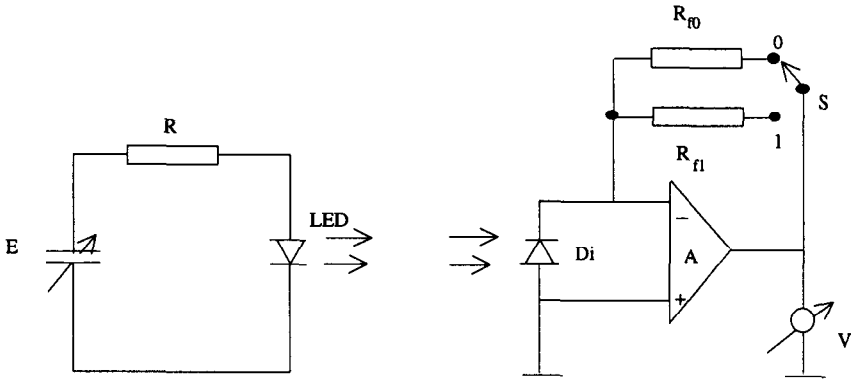

Figure A.2 - Measuring circuitry

Copyright International Organization for Standardization
Provided by IHS under license with ISO
No reproduction or networking permitted without license from IHS
Not for Resale

Annex B

(normative)

CRC generation

The CRC field shall be recorded as a 64-bit check character computed over the 16 608 bits of the 2 076 bytes, starting with the first byte of the Data Field and ending with the last byte of CF2.

These bits, with b_0 being the low-order bit, shall be the coefficient of the polynomial:

$$M(X) = \sum_{i=o}^{i=16607} b_i X^i$$

Let $P(x) = M(x)\, x^{64}$

The generating polynomial shall be

$$G(x) = x^{64} + x^{62} + x^{57} + x^{55} + x^{54} + x^{53} + x^{52} + x^{47} + x^{46} + x^{45} + x^{40} + x^{39} + x^{38} + x^{37} + x^{35} + x^{33} + x^{32} + x^{31} + x^{29} + x^{27} + x^{24} + x^{23} + x^{22} + x^{21} + x^{19} + x^{17} + x^{13} + x^{12} + x^{10} + x^9 + x^7 + x^4 + x + 1$$

The 64-bit CRC character shall be the remainder of the division of $P(x)$ by $G(x)$.

Copyright International Organization for Standardization
Provided by IHS under license with ISO
No reproduction or networking permitted without license from IHS
Not for Resale

Annex C

(normative)

ECC generation

C.1 The four ECC Blocks are designated by ECC1, ECC2, ECC3 and ECC4 (see clause 15). Each 8-bit byte of the ECC Blocks is computed over the corresponding bytes in the Data Fields and CF1 of the first 16 blocks of an Entity. Thus, for each of the ECC Blocks:

ECC1 (Byte i), ECC2 (Byte i), ECC3 (Byte i) and ECC4 (Byte i)

are based on:

Block 1 (Byte i), Block 2 (Byte i), Block 3 (Byte i) ... and Block 16 (Byte i).

C.2 Each byte of the ECC Blocks is computed as follows.

- At the start of each ECC computation RS1 Byte (i,0), RS2 Byte (i,0), RS3 Byte (i,0) and RS4 Byte (i,0) are set to all ZEROs, where i indicates the position of the byte in the block.
- After passing each group of 16 bytes through the Reed-Solomon generator:
- ECC1 Byte (i) → RS1 Byte (i,16)
- ECC2 Byte (i) → RS2 Byte (i,16)
- ECC3 Byte (i) → RS3 Byte (i,16)
- ECC4 Byte (i) → RS4 Byte (i,16)

C.3 Figure C.1 summarizes this process. In this figure i represents the position of the byte and j the Data Block number (j = 1 to 16).

Copyright International Organization for Standardization
Provided by IHS under license with ISO
No reproduction or networking permitted without license from IHS
Not for Resale

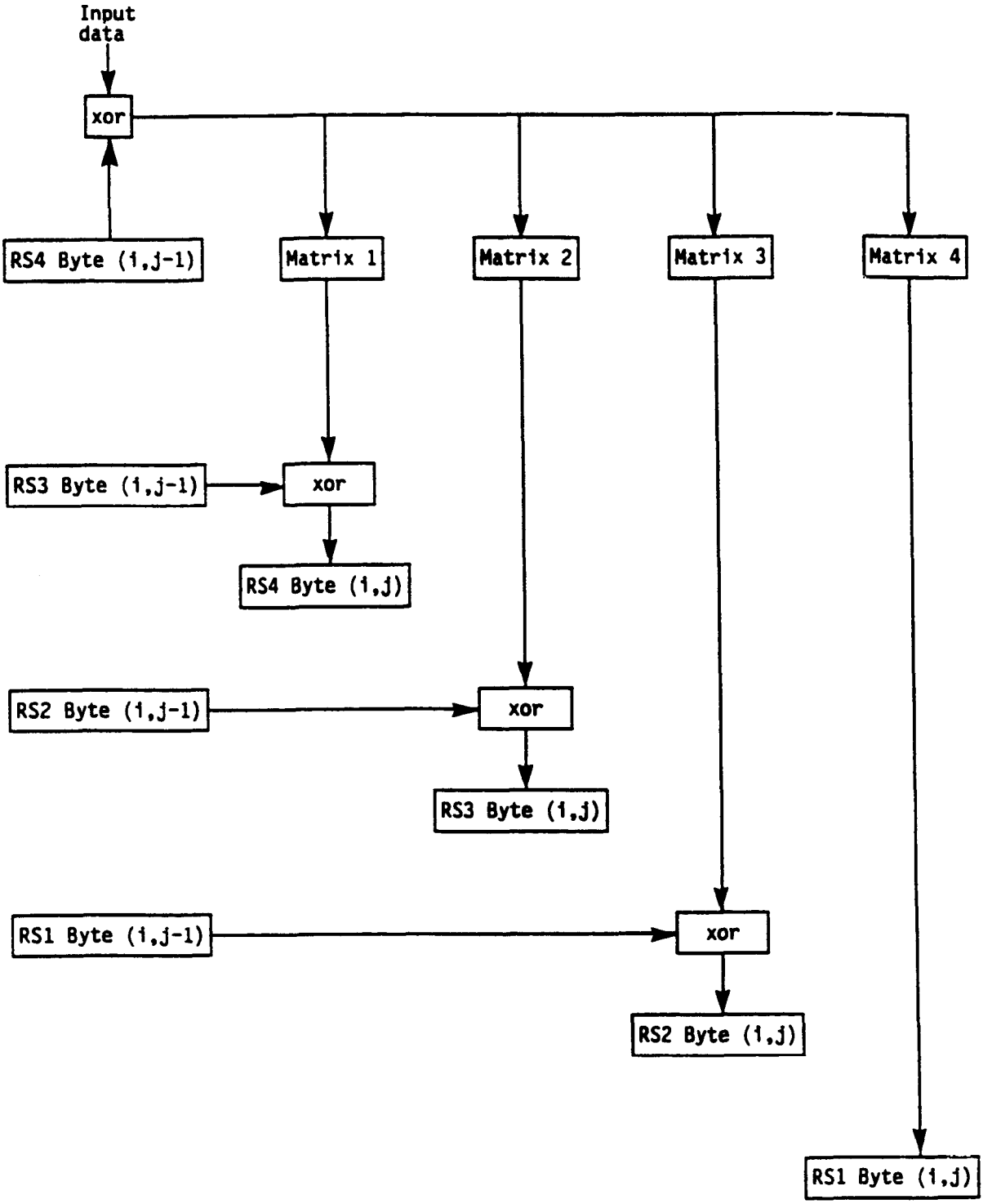

Figure C.1 - ECC Blocks

Copyright International Organization for Standardization
Provided by IHS under license with ISO
No reproduction or networking permitted without license from IHS
Not for Resale

C.4 The matrices shown in figure C.1 shall be as follows.

- Matrix 4

07 = i7 xor i6 xor i5 xor i1;
06 = i6 xor i5 xor i4 xor i0;
05 = i5 xor i4 xor i3;
04 = i4 xor i3 xor i2;
03 = i6 xor i5 xor i3 xor i2;
02 = i7 xor i6 xor i4 xor i2;
01 = i7 xor i3;
00 = i7 xor i6 xor i2.

- Matrix 3

07 = i7 xor i5 xor i4 xor i3 xor i2 xor i1;
06 = i7 xor i6 xor i4 xor i3 xor i2 xor i1 xor 10;
05 = i6 xor i5 xor i3 xor i2 xor i1 xor i0;
04 = i7 xor i5 xor i4 xor i2 xor i1 xor i0;
03 = i6 xor i5 xor i2 xor i0;
02 = i7 xor i3 xor i2;
01 = i7 xor i6 xor i5 xor i4 xor i3;
00 = i6 xor i5 xor i4 xor i3 xor i2.

- Matrix 2

07 = i5 xor i3 xor i2;
06 = i4 xor i2 xor i1;
05 = i3 xor i1 xor i0;
04 = i2 xor i0;
03 = i5 xor i3 xor i2 xor i1;
02 = i5 xor i4 xor i3 xor i1 xor 10;
01 = i7 xor i5 xor i4 xor i0;
00 = i6 xor i4 xor i3.

- Matrix 1

07 = i7 xor i6 xor i5 xor i4;
06 = i7 xor i6 xor i5 xor i4 xor i3;
05 = i6 xor i5 xor i4 xor i3 xor i2;
04 = i7 xor i5 xor i4 xor i3 xor i2 xor i1;
03 = i5 xor i3 xor i2 xor i1 xor i0;
02 = i6 xor i5 xor i2 xor i1 xor i0;
01 = i7 xor i6 xor i1 xor i0;
00 = i7 xor i6 xor i5 xor i0.

Copyright International Organization for Standardization
Provided by IHS under license with ISO
No reproduction or networking permitted without license from IHS
Not for Resale

Annex D

(normative)

Format of Control Field 1

When recorded on the tape, the fields of CF1 shall be formatted as specified by figure D.1.

Bit positions	Field name	Length in bits
1 to 8	Tape Mark, bits 17 to 24	8
9	Tape Mark, bit 25	1
10	EDC Check, set to ONE	1
11	Early Warning	1
12	Last Block	1
13 to 15	Block Type, bits 1 to 3	3
16	Reserved, set to ZERO	1
17 to 24	Tape Mark, bits 1 to 8	8
25 to 32	Tape Mark, bits 9 to 16	8
33 to 40	Object Number, bits 17 to 24	8
41	Object Number, bit 25	1
42 to 48	Logical Block Number, bits 1 to 7	7
49 to 56	Object Number, bits 1 to 8	8
57 to 64	Object Number, bits 9 to 16	8
65 to 68	Record Byte Count, bits 17 to 20	4
69 to 71	Reserved, set to ZERO	3
72	Format, bit 1 set to ZERO	1
73 to 77	Format, bits 2 to 6 set to ZERO	5
78 to 80	Reserved, set to ZERO	3
81 to 88	Record Byte Count, bits 1 to 8	8
89 to 96	Record Byte Count, bits 9 to 16	8

Figure D.1 - Format of CF1

Copyright International Organization for Standardization
Provided by IHS under license with ISO
No reproduction or networking permitted without license from IHS
Not for Resale

Annex E

(normative)

Format of Control Field 2

When recorded on the tape, the fields of CF2 shall be formatted as specified by figure E.1

Bit positions	Field name	Length in bits
1 to 3	Block Offset, bits 17 to 19	3
4	LEOT	1
5 to 8	Entity Offset	4
9 to 16	Entity Control, bits 1 to 8	8
17 to 24	Block Offset, bits 1 to 8	8
25 to 32	Block Offset, bits 9 to 16	8
33 to 40	Entity Number, bits 1 to 8	8
41 to 48	Entity Number, bits 9 to 16	8
49 to 54	Logical Track Number, bits 1 to 6	6
55	K Bit	1
56	Fixed Tag, bit 1	1
57 and 58	Fixed Tag, bits 2 and 3	2
59 to 64	Random Tag, bits 1 to 6	6

Figure E.1 - Format of CF2

Copyright International Organization for Standardization
Provided by IHS under license with ISO
No reproduction or networking permitted without license from IHS
Not for Resale

Annex F

(informative)

Recommendations for transportation

F.1 Environment

It is recommended that during transportation the cartridges are kept within the following conditions:

F.1.1 Unrecorded cartridges

Temperature	: - 23 °C to 48 °C
Relative humidity	: 5 % to 100 %
Wet bulb temperature	: 26 °C max.
Duration	: 10 consecutive days max.

There shall be no condensation in or on the cartridge.

F.1.2 Recorded cartridges

Temperature	: 5 °C to 32 °C
Relative humidity	: 5 % to 80 %
Wetbulb temperature	: 26 °C max.

There shall be no condensation in or on the cartridge.

F.2 Hazards

Transportation of recorded cartridges involves three basic potential hazards.

F.2.1 Impact loads and vibration

The following recommendations should minimize damage during transportation.

a) Avoid mechanical loads that would distort the cartridge shape.
b) Avoid dropping the cartridge more than 1 m.
c) Cartridges should be fitted into a rigid box containing adequate shock-absorbent material.
d) The final box must have a clean interior and construction that provides sealing to prevent the ingress of dirt and water.
e) The orientation of the cartridges within the final box should be such that the axes of the hubs are horizontal.
f) The final box should be clearly marked to indicate its correct orientation.

F.2.2 Extremes of temperature and humidity

a) Extreme changes in temperature and humidity should be avoided whenever possible.

b) Whenever a cartridge is received it should be conditioned in the operating environment for a period of at least 24 h.

F.2.3 Effects of stray magnetic fields

A nominal spacing of not less than 80 mm should exist between the cartridge and the outer surface of the shipping container. This should minimize the risk of corruption.

Copyright International Organization for Standardization
Provided by IHS under license with ISO
No reproduction or networking permitted without license from IHS
Not for Resale

Annex G

(informative)

Inhibitor tape

Any tape that reduces the performance of the tape drive or other tapes is called an inhibitor tape. Certain tape characteristics can contribute to poor tape drive performance. These characteristics include: high abrasivity, high static friction to tape path components, poor edge conditions, excessive tape wear debris, interlayer slippage, transfer of oxide coating to the back of the next tape layer, separation of tape constituents causing deposits that may lead to tape sticking or poor performance of other tapes. Tapes that have these characteristics may not give satisfactory performance and can result in excessive errors.

Tapes to be used in this cartridge should not be inhibitor tapes.

Annex H

(informative)

Recommendations on tape durability

The durability/reliability test assesses the ability of the tape to resist the wearing action encountered while cycling the tape on a tape drive. This is not a test for end of life for the tape or for the ability of the drive to recover data from erroneous blocks.

When delivered from the supplier the tape of a new cartridge should meet the following requirements.

Testing and measurements performed on the cartridge using an appropriate drive are described below. The test must be performed in the operating environment (see 6.2) for the tape and the tape drive.

H.1 The durability/reliability is the ability of the tape to withstand the wearing action encountered during repeated access to a file of data. A permanent missing pulse is one that persists for ten consecutive read passes.

H.2 If after 20 000 passes, 3 blocks of one of 10 Entities are found in error, the tape is considered as having failed to pass the test. An error means that all three blocks have had at least one missing pulse each.

H.3 If after 250 000 passes, 5 blocks of one of 10 Entities are found in error, the tape is considered as having failed to pass the test. An error means that all 5 blocks have had at least one missing pulse each.

H.4 Procedure

Ensure the tape drive is clean before starting this test.

As a test sample, use a minimum of four cartridges. The test area should consist of at least 1 m of tape or 10 Entities.

Each test cycle consists of starting at the beginning of the test area and accessing each record in the test area before returning to the beginning of the test area. Seven attempts to read should be made for each missing pulse before a missing pulse zone is logged.

Tape path cleaning between passes is not permitted for this test.

Copyright International Organization for Standardization
Provided by IHS under license with ISO
No reproduction or networking permitted without license from IHS
Not for Resale

Annex J

(informative)

Handling guidelines

J.1 General

J.1.1 Do not carry cartridges loosely in a container that would submit cartridges to unnecessary physical shock.

J.1.2 Leave the cartridges in their protective package until ready for use in tape unit.

J.1.3 Avoid unnecessary opening of cartridge lid exposing tape to possible contamination or physical damage or both. Do not allow direct contact with tape.

J.1.4 Do not expose the cartridge to moisture or direct sunlight.

J.1.5 Maintain a clean operating, working and storage environment.

J.1.6 Do not place cartridges on or near devices that may produce a magnetic field.

J.2 Labels

J.2.1 Use labels provided by the cartridge supplier. Other labelling techniques may interfere with normal cartridge operation.

J.2.2 Do not use graphite pencils, water soluble felt pens, or other debris producing writing instruments on labels. Never erase a label - replace it.

J.3 Storage

The cartridge is to be stored vertically, whether individually or in the protective packing.

Copyright International Organization for Standardization
Provided by IHS under license with ISO
No reproduction or networking permitted without license from IHS
Not for Resale

UDC 681.327.636

Descriptors: data processing, information interchange, data recording, data recording devices, magnetic recording, magnetic tapes, magnetic tape cartridges, definitions, specification, dimensions, mechanical properties, electrical properties, magnetic properties, track formats, interchangeability.

Price based on 57 pages

Copyright International Organization for Standardization
Provided by IHS under license with ISO
No reproduction or networking permitted without license from IHS
Not for Resale