TECHNICAL REPORT

ISO/TR 29123

First edition
2007-12-15

Identification Cards — Proximity Cards — Requirements for the enhancement of interoperability

Cartes d'identification — Cartes de proximité — Exigences pour l'amélioration de l'interopérabilité

Reference number
ISO/IEC TR 29123:2007(E)

© ISO 2007

Copyright International Organization for Standardization
Provided by IHS under license with ISO
No reproduction or networking permitted without license from IHS

Not for Resale

PDF disclaimer

This PDF file may contain embedded typefaces. In accordance with Adobe's licensing policy, this file may be printed or viewed but shall not be edited unless the typefaces which are embedded are licensed to and installed on the computer performing the editing. In downloading this file, parties accept therein the responsibility of not infringing Adobe's licensing policy. The ISO Central Secretariat accepts no liability in this area.

Adobe is a trademark of Adobe Systems Incorporated.

Details of the software products used to create this PDF file can be found in the General Info relative to the file; the PDF-creation parameters were optimized for printing. Every care has been taken to ensure that the file is suitable for use by ISO member bodies. In the unlikely event that a problem relating to it is found, please inform the Central Secretariat at the address given below.



COPYRIGHT PROTECTED DOCUMENT

© ISO 2007

All rights reserved. Unless otherwise specified, no part of this publication may be reproduced or utilized in any form or by any means, electronic or mechanical, including photocopying and microfilm, without permission in writing from either ISO at the address below or ISO's member body in the country of the requester.

ISO copyright office
Case postale 56 • CH-1211 Geneva 20
Tel. + 41 22 749 01 11
Fax + 41 22 749 09 47
E-mail copyright@iso.org
Web www.iso.org

Published in Switzerland

--`,,```,,,,````-`-`,,`,,`,`,,`---

;;
Copyright International Organization for Standardization
Provided by IHS under license with ISO
No reproduction or networking permitted without license from IHS

© ISO/IEC 2007 – All rights reserved

Not for Resale

Contents

Page

Foreword vi

Introduction vii

1 Scope 1

2 Normative references 1

3 Terms and definitions 1

4 Symbols (and abbreviated terms) 2

5 General Test Requirements and Conditions 2
5.1 Test Environment 2
5.1.1 Test setup 2
5.1.2 PICC test apparatus 2
5.1.3 PCD test apparatus 3
5.2 Nominal Environment 3
5.3 Definition of PCD Measurement reference point 3

6 PCD Power Transfer 3
6.1 PCD Operating Field Strength 3
6.1.1 Test Description 3
6.1.2 Conditions 4
6.1.3 Test report 4
6.2 Resonant Frequency of PICC (informal only) 4

7 PCD Communication Signal Interface 4
7.1 Purpose 4
7.2 RF Noise and Signal Distortion (informal only) 5
7.3 Load modulation reception test (Type A and B) 5
7.3.1 Test Description 5
7.3.2 Conditions 5
7.3.3 Parameters 5
7.3.4 Pass Criteria 6
7.4 Modulation Index and Waveform Test (Types A and B) 6
7.4.1 Test Description 6
7.4.2 Conditions 6
7.4.3 Parameters 6
7.4.4 Pass Criteria 6

8 PCD Framing and timing tests 7
8.1 Type A Frame Delay Time – PICC to PCD 7
8.1.1 Test Description 7
8.1.2 Conditions 7
8.1.3 Parameters 7
8.1.4 Pass Criteria 7
8.1.5 Remarks 7
8.2 Type A Frame Delay Time – PCD to PICC 7
8.2.1 Test Description 7
8.2.2 Conditions 7
8.2.3 Parameters 7
8.2.4 Pass Criteria 7
8.3 Type B PCD Bit Boundaries 8
8.3.1 Test Description 8
8.3.2 Conditions 8
8.3.3 Parameters 8

© ISO/IEC 2007 – All rights reserved

Copyright International Organization for Standardization
Provided by IHS under license with ISO
No reproduction or networking permitted without license from IHS
Not for Resale

8.3.4 Pass Criteria 8
8.4 Type B PCD Start-of-Frame & End-of-Frame-Timing (SOF & EOF) (Type B only) 8
8.4.1 Test Description 8
8.4.2 Conditions 8
8.4.3 Parameters 8
8.4.4 Pass Criteria 8
8.5 Type B Extra Guard Time (EGT) PCD to PICC 8
8.5.1 Test Description 8
8.5.2 Conditions 8
8.5.3 Parameters 9
8.5.4 Pass Criteria 9
8.6 Type B Extra Guard Time (EGT) PICC to PCD 9
8.6.1 Test Description 9
8.6.2 Conditions 9
8.6.3 Parameters 9
8.6.4 Pass Criteria 9
8.7 Timing before PICC Type B Start-of-Frame (TR0 & TR1) 9
8.7.1 Test Description 9
8.7.2 Conditions 9
8.7.3 Parameters 9
8.7.4 Pass Criteria 10
8.8 Timing before PCD Type B Start-of-Frame (TR2) 10
8.8.1 Test Description 10
8.8.2 Conditions 10
8.8.3 Parameters 10
8.8.4 Pass Criteria 10

9 Protocol Activation 10
9.1 Purpose 10
9.2 Type A Activation - Handling of Collisions 10
9.2.1 Test Description 10
9.2.2 Pass Criteria 10
9.3 Type A Activation - Handling of RATS (including frame size selection) 11
9.3.1 Test Description 11
9.3.2 Pass Criteria 11
9.4 Type A Activation - Handling of PPS 11
9.4.1 Test Description 11
9.4.2 Pass Criteria 11
9.5 Type A Activation - Handling of CID during Activation 11
9.5.1 Test Description 11
9.5.2 Pass Criteria 11
9.6 Type B Activation - Frame Size Selection 11
9.6.1 Test Description 11
9.6.2 Pass Criteria 11
9.7 Type B Activation - Bit Rate Selection 12
9.7.1 Test Description 12
9.7.2 Pass Criteria 12
9.8 Type B Activation - Handling of CID during Activation 12
9.8.1 Test Description 12
9.8.2 Pass Criteria 12
9.9 Handling of the Polling Loop (Type A and B) 12
9.9.1 Test Description 12
9.9.2 Pass Criteria 12
9.10 Data Exchange Protocol Tests - Error Detection and Recovery 12
9.10.1 Test Description 13
9.10.2 Pass Criteria 13
9.11 Data Exchange Protocol Tests - Request for Waiting Time Extension 13
9.11.1 Test Description 13
9.11.2 Pass Criteria 13

© ISO/IEC 2007 – All rights reserved
Copyright International Organization for Standardization
Provided by IHS under license with ISO
No reproduction or networking permitted without license from IHS
Not for Resale

Annex A (informative) **Definition of the Test Apparatus** **14**
A.1 Definition of the Reference PCD **14**
A.2 Definition of the Reference PICC for load modulation reception test **14**
A.2.1 General **14**

Annex B (informative) **Test Tables** **16**
B.1 PICC **16**
B.1.1 Type A and B **16**
B.1.2 Type A **17**
B.1.3 Type B **18**
B.2 PCD **20**
B.2.1 Type A and B **20**
B.2.2 Type A **22**
B.2.3 Type B **24**

Bibliography **26**

--`,,```,,,,````-`-`,,`,,`,`,,`---
© ISO/IEC 2007 – All rights reserved
Copyright International Organization for Standardization
Provided by IHS under license with ISO
No reproduction or networking permitted without license from IHS
Not for Resale

Foreword

ISO (the International Organization for Standardization) and IEC (the International Electrotechnical Commission) form the specialized system for worldwide standardization. National bodies that are members of ISO or IEC participate in the development of International Standards through technical committees established by the respective organization to deal with particular fields of technical activity. ISO and IEC technical committees collaborate in fields of mutual interest. Other international organizations, governmental and non-governmental, in liaison with ISO and IEC, also take part in the work. In the field of information technology, ISO and IEC have established a joint technical committee, ISO/IEC JTC 1.

International Standards are drafted in accordance with the rules given in the ISO/IEC Directives, Part 2.

The main task of the joint technical committee is to prepare International Standards. Draft International Standards adopted by the joint technical committee are circulated to national bodies for voting. Publication as an International Standard requires approval by at least 75 % of the national bodies casting a vote.

In exceptional circumstances, the joint technical committee may propose the publication of a Technical Report of one of the following types:

— type 1, when the required support cannot be obtained for the publication of an International Standard, despite repeated efforts;

— type 2, when the subject is still under technical development or where for any other reason there is the future but not immediate possibility of an agreement on an International Standard;

— type 3, when the joint technical committee has collected data of a different kind from that which is normally published as an International Standard ("state of the art", for example).

Technical Reports of types 1 and 2 are subject to review within three years of publication, to decide whether they can be transformed into International Standards. Technical Reports of type 3 do not necessarily have to be reviewed until the data they provide are considered to be no longer valid or useful.

Attention is drawn to the possibility that some of the elements of this document may be the subject of patent rights. ISO and IEC shall not be held responsible for identifying any or all such patent rights.

ISO/IEC TR 29123, which is a Technical Report of type 2, was prepared by Joint Technical Committee ISO/IEC JTC 1, *Information technology*, Subcommittee SC 17, *Cards and personal identification*.

--`,,```,,,,````-`-`,,`,,`,`,,`---

© ISO/IEC 2007 – All rights reserved
Copyright International Organization for Standardization
Provided by IHS under license with ISO
No reproduction or networking permitted without license from IHS
Not for Resale

Introduction

This Technical Report describes requirements for improving the interoperability of proximity cards systems compliant with ISO/IEC 14443. It consists of test functionality based on the ISO/IEC 14443 series and the ISO/IEC 10373-6 test methods standards that may optionally be included in proximity devices in order to improve testability as defined in Annex B. A number of practical tests are then defined.

The contents of this Technical Report may be incorporated into the Revision of ISO/IEC 10373-6, and subsequently may be withdrawn after the publication of ISO/IEC 10373-6 (Revision), expected in 2009.

© ISO/IEC 2007 – All rights reserved

Copyright International Organization for Standardization
Provided by IHS under license with ISO
No reproduction or networking permitted without license from IHS
Not for Resale

Copyright International Organization for Standardization
Provided by IHS under license with ISO
No reproduction or networking permitted without license from IHS
Not for Resale

Identification Cards — Proximity Cards — Requirements for the enhancement of interoperability

1 Scope

This Technical Report defines a series of requirement and tests used to enhance the interoperability of Proximity cards (PICC) and Proximity coupling devices (PCD) defined in the ISO/IEC 14443 series and tested in accordance with ISO/IEC 10373-6.

Conformance to this Technical Report should increase the chance that the PICCs and PCDs designed to the ISO/IEC 14443 series of standards will be interoperable.

2 Normative references

The following referenced documents are indispensable for the application of this document. For dated references, only the edition cited applies. For undated references, the latest edition of the referenced document (including any amendments) applies.

ISO/IEC 10373-6:2001*, Identification cards — Test methods — Part 6: Proximity cards*

ISO/IEC 14443-1:2000, *Identification cards — Contactless integrated circuit(s) cards — Proximity cards — Part 1: Physical characteristics*

ISO/IEC 14443-2:2001, *Identification cards — Contactless integrated circuit(s) cards — Proximity cards — Part 2: Radio frequency power and signal interface*

ISO/IEC 14443-3:2001*, Identification cards — Contactless integrated circuit(s) cards —Proximity cards — Part 3: Initialization and anticollision*

ISO/IEC 14443-4:2001, *Identification cards — Contactless integrated circuit(s) cards — Proximity cards — Part 4: Transmission protocol*

3 Terms and definitions

For the purposes of this document, the following terms and definitions apply.

3.1
base standard
ISO/IEC 14443, the standard to which the tests refer

3.2
test method
method for testing the characteristics of PICCs and PCDs for the purpose of assessing their conformance with International Standards

© ISO/IEC 2007 – All rights reserved

Copyright International Organization for Standardization
Provided by IHS under license with ISO
No reproduction or networking permitted without license from IHS
Not for Resale

4 Symbols (and abbreviated terms)

For the purposes of this document, the following abbreviations apply:

ATS	Answer to select
DUT	Device under test
EGT	Extra guard time
EOF	End of frame
etu	Elementary time unit
fc	Carrier frequency (13,56MHz)
FDT	Frame delay time
fs	Sub-carrier frequency
H_{max}	Maximum field strength of the PCD antenna field
H_{min}	Minimum field strength of the PCD antenna field
PCD	Proximity coupling device
PICC	Proximity integrated circuit card
PPS	Protocol and parameter selection
RATS	Request for answer to select
SOF	Start of frame

5 General Test Requirements and Conditions

Tests described in this technical report may be performed in any sequence.

5.1 Test Environment

A proximity card system consists of a PCD and a minimum of one PICC. In order to test either a PCD or PICC, test apparatus is required in order to fulfill the functionality of the other component.

Annex A defines reference test apparatus in order to undertake testing of a proximity device. A reference PCD is required in order to test a PICC, A reference PICC is required to test a PCD. These reference devices have been standardized such that all facilities undertaking the testing defined in this standard can do so in a consistent manner.

Unless otherwise specified, the tests in this technical report shall be applied to PICCs and PCDs defined in ISO/IEC 14443.

5.1.1 Test setup

All cables used to connect apparatus in the test setup should be kept as short as possible, for certain critical cables see the appropriate clause. No metallic objects (or electronic equipment) may be placed within a 30 cm radius of the test setup wherever fields might be affected. Other electromagnetic sources including PCDs, that could influence the test results, shall not be present.

5.1.2 PICC test apparatus

The PICC test apparatus shall be as defined in ISO/IEC 10373-6 with additional functionality as required by further clauses of this document.

© ISO/IEC 2007 – All rights reserved
Copyright International Organization for Standardization
Provided by IHS under license with ISO
No reproduction or networking permitted without license from IHS
Not for Resale

5.1.3 PCD test apparatus

The PCD test apparatus shall be as defined in ISO/IEC 10373-6 with additional functionality as required by further clauses of this document.

5.2 Nominal Environment

Unless otherwise specified, to ensure consistent conditions, tests shall be performed within the following nominal environment:

Table 1 — Nominal Environment

Parameter	Value
Temperature	Nominal Temperature of 23 °C ± 3 °C (73 °F ± 5 °F)
Relative humidity	40 % to 60 %

5.3 Definition of PCD Measurement reference point

All tests shall be done over a certain set of points within the manufacturer's defined conformity volume.

The PCD manufacturer shall define a Reference Point as the (0,0,0) point for the X,Y,Z axis and plane where the optimal position on the surface of the PCD for contactless operation is located. When performing tests, all position references given shall be relative to the Reference Point.

X and Y locations shall be in the same plane as the face of the PCD on which the optimal position is located. Height Z shall be calculated perpendicular to the face of the PCD on which the optimal position is located such that:

For height Z = 0 mm: The DUT antenna shall be placed in contact with the Reference Point.

For height Z = n mm: The DUT antenna shall be placed exactly n mm along the main axis.

6 PCD Power Transfer

6.1 PCD Operating Field Strength

The purpose of this test is to check if the PCD meets the field strength requirements, within its defined conformity volume.

6.1.1 Test Description

The field strength measured under loaded conditions, with the reference PICC, shall be between $H_{min,\ PCD}$ and $H_{max,\ PCD}$ recorded for all measurement positions defined within the defined conformity volume.

The measurement device used for this test shall be the Reference PICC for field and power measurements defined in ISO/IEC 10373-6:2001, Annex D.

Perform the following steps for $H_{min,\ PCD}$:

1) Adjust the resonance frequency of the Reference PICC to 13,56 MHz as described in ISO/IEC 10373-6:2001/Amd.2:2003.

2) Put the Reference PICC into the Test PCD assembly.

© ISO/IEC 2007 – All rights reserved

Copyright International Organization for Standardization
Provided by IHS under license with ISO
No reproduction or networking permitted without license from IHS
Not for Resale

3) Adjust the resistor R2 to obtain 3 V (dc) at field strength of $H_{min, PCD}$.

4) Put the Reference PICC into the measurement positions within the PCD conformity volume.

5) For all measurement positions within the PCD conformity volume, the dc voltage at R2 shall be greater or equal to 3 V.

Perform the following steps for H_{maxPCD}:

1) Adjust the resonance frequency of the Reference PICC to 19 MHz as described in ISO/IEC 10373-6:2001/Amd.2:2003.

2) Put the Reference PICC into the Test PCD assembly.

3) Adjust the resistor R2 to obtain 3 V (dc) at field strength of $H_{max, PCD}$.

4) For all measurement positions within the PCD conformity volume, the dc voltage at R2 shall be less than 3 V.

'Optionally perform the following steps for $H_{min, PCD}$ to meet 'Class 1' PICC requirements.

1) Adjust the resonance frequency of the Reference PICC to 13,56 MHz as described in ISO/IEC 10373-6:2001/Amd.2:2003.

2) Put the Reference PICC into the Test PCD assembly.

3) Adjust the resistor R2 to obtain 6 V (dc) at field strength of $H_{min, PCD}$.

4) Put the Reference PICC into the measurement positions within the PCD Class 1conformity volume.

5) For all measurement positions within the PCD Class 1 conformity volume, the dc voltage at R2 shall be greater or equal to 6V.

6.1.2 Conditions

Temperature range: As per the manufacturers specification.

6.1.3 Test report

The test report shall include the number of passed tests versus the total number of tests, a test description and the date of the tests.

6.2 Resonant Frequency of PICC (informal only)

No requirement for the resonant frequency of the PICC is currently specified in ISO/IEC 14443.

If this test is performed test procedures as defined in ISO/IEC 10373-6:2001/Amd.2:2003, clause 7.3, should be used.

7 PCD Communication Signal Interface

7.1 Purpose

The PCD modulates the carrier signal used to power the PICC within its defined conformance volume to send data frames. The PICC modulates the carrier signal with a sub-carrier which is used to send responses to the

© ISO/IEC 2007 – All rights reserved
Copyright International Organization for Standardization
Provided by IHS under license with ISO
No reproduction or networking permitted without license from IHS
Not for Resale

PCD. If data cannot be reliably transferred, performance will be adversely affected as the error recovery protocol defined in ISO/IEC 14443-4 resends data packets.

7.2 RF Noise and Signal Distortion (informal only)

No requirement for the RF Noise emitted by the PICC is currently specified in ISO/IEC 14443. When specified, test methods will be developed and applied.

7.3 Load modulation reception test (Type A and B)

The load switching signal shall be a correct ATQ response to a request command, as defined in the base standards.

7.3.1 Test Description

The purpose of this test is to determine if the PCD is able to receive and demodulate signals with minimum load modulation amplitude. The PCD should provide a trigger signal (e.g. pulse at beginning or end of PCD command) to the load switching signal source (e.g. Arbitrary Waveform Generator) to send the response with required timings.

For this test the Reference PICC defined in Annex A.2 of this standard shall be used.

For each field strength value and each resonance frequency perform the following steps:

1. Adjust the resonance frequency of the Reference PICC to 13,56 MHz as described in ISO/IEC 10373-6:2001/Amd.2:2003.

2. Put the Reference PICC into the Test PCD assembly.

3. Adjust the field strength monitored by the calibration coil to $H_{min,\ PCD}$.

4. Adjust the resistor R2 to obtain 3 V (dc) at field strength $H_{min,\ PCD}$.

5. Adjust the resistor R_{mod} to obtain the required load modulation amplitude for field strength $H_{min,\ PCD}$.

6. Put the Reference PICC to a measurement position within the PCD conformity volume where a dc voltage of 3 V can be obtained.

7. Verify if the PCD is able to detect a response with minimum load modulation amplitude with required data rate.

8. Repeat steps 2 to 7 where the field strength should be increased in steps of 0,5 A/m up to PCDs maximum generated field strength.

Repeat steps 1 to 8 at Reference PICC resonance frequency of 15 MHz and 19 MHz.

7.3.2 Conditions

Temperature range: As per the manufacturer's specification.

7.3.3 Parameters

PCD requirement on load modulation reception as defined in ISO/IEC 14443-2.

Reference PICC resonance frequency: 13,56 MHz, 15 MHz and 19 MHz.

NOTE Enhanced requirements using resonance frequencies 13,56 MHz and 15 MHz.

--`,,```,,,,````-`-`,,`,,`,`,,`---
© ISO/IEC 2007 – All rights reserved
Copyright International Organization for Standardization
Provided by IHS under license with ISO
No reproduction or networking permitted without license from IHS
Not for Resale

Supported data rates for PCD reception: *fc*/128, *fc*/64, *fc*/32, *fc*/16.

NOTE A PCD test command may be used for testing data rates higher than *fc*/128.

7.3.4 Pass Criteria

The test report shall include the number of passed tests versus the total number of tests, a test description and the date of the tests.

7.4 Modulation Index and Waveform Test (Types A and B)

7.4.1 Test Description

The purpose of this test is to determine the compliance of the PCD regarding waveform shapes. The test shall measure the shapes of the modulated field. The Reference PICC for modulation index and waveform test as defined in ISO/IEC 10373-6:2001 Annex I shall be used. A command with the required data rate shall be sent by the PCD.

For one measurement position perform the following step:

1) Check the waveform shapes are within the specified limits for all data rates by using the calibration coil as pick-up device.

For several measurement positions within the PCD conformity volume perform the following steps:

1) Adjust the resonance frequency of the Reference PICC to 19 MHz as described in ISO/IEC 10373-6:2001/Amd.2:2003.

2) Put the Reference PICC to the measurement position within the PCD conformity volume.

3) Adjust the resistor R2 to obtain 3 V (dc).

4) Check if the waveform shapes are within the specified limits for all data rates at current position

5) Put the Reference PICC to the next measurement position within the conformity volume and repeat steps 3) to 5).

Repeat steps 1 to 5 at Reference PICC resonance frequency of 13,56 MHz and 15 MHz.

7.4.2 Conditions

Temperature: As defined by the manufacturer.

7.4.3 Parameters

Reference PICC resonance frequency: 19 MHz.

NOTE Optional enhanced requirements using resonance frequencies of 13,56 MHz and 15 MHz.

Supported data rates for PCD: *fc*/128, *fc*/64, *fc*/32, *fc*/16.

NOTE A PCD test command may be used for testing data rates higher than *fc*/128.

7.4.4 Pass Criteria

The test report shall include the number of passed tests versus the total number of tests, a test description and the number of different samples and the date of the tests.

© ISO/IEC 2007 – All rights reserved
Copyright International Organization for Standardization
Provided by IHS under license with ISO
No reproduction or networking permitted without license from IHS
Not for Resale

8 PCD Framing and timing tests

8.1 Type A Frame Delay Time – PICC to PCD

This test shall check if the PCD can handle a FDT according ISO/IEC 14443-3. For this test the same setup shall be used as for the load modulation reception test.

8.1.1 Test Description

This test shall check if a PCD frame after a PICC response is not sent before a minimum frame delay time, as specified in ISO/IEC 14443-3, after the PICC has sent ATQ. After ATQ the PCD shall send an AC frame. The detailed test procedure is not further specified herein.

8.1.2 Conditions

Temperature: As per the manufacturer's specification.

8.1.3 Parameters

Position (Field strength): $H_{min,\ PCD}$.

Data rate: *fc*/128.

8.1.4 Pass Criteria

The test report shall include the number of passed tests versus the total number of tests, a test description and the date of the tests.

8.1.5 Remarks

This test should be performed for all commands, even during the protocol test.

8.2 Type A Frame Delay Time – PCD to PICC

This test shall check if the PCD can handle a FDT according ISO/IEC 14443-3. For this test the same setup shall be used as for the load modulation reception test.

8.2.1 Test Description

This test shall check if the PCD is able to receive a PICC response within the FDT limits. The detailed test procedure is not further specified herein.

8.2.2 Conditions

Temperature: As per the manufacturer's specification.

8.2.3 Parameters

Position (Field strength): $H_{min,\ PCD}$.

Data rate: *fc*/128

8.2.4 Pass Criteria

The test report shall include the number of passed tests versus the total number of tests, a test description and the number of different samples and the date of the tests.

--`,,```,,,,````-`-`,,`,,`,`,,`---
© ISO/IEC 2007 – All rights reserved
Copyright International Organization for Standardization
Provided by IHS under license with ISO
No reproduction or networking permitted without license from IHS
Not for Resale

8.3 Type B PCD Bit Boundaries

8.3.1 Test Description

The purpose of this test is to check whether or not the PCD meets the bit boundary requirements according to ISO/IEC 14443-3. The detailed test procedure is not further specified herein.

8.3.2 Conditions

Temperature: As per the manufacturer's specification.

8.3.3 Parameters

Position (Field strength): $H_{min,\ PCD}$.

Supported data rates for PCD: *fc*/128, *fc*/64, *fc*/32, *fc*/16.

8.3.4 Pass Criteria

The test report shall include the number of passed tests versus the total number of tests, a test description and the number of different samples and the date of the tests.

8.4 Type B PCD Start-of-Frame & End-of-Frame-Timing (SOF & EOF) (Type B only)

8.4.1 Test Description

The purpose of this test is to check whether or not the PCD meets SOF & EOF requirements according to ISO/IEC 14443-3. The detailed test procedure is not further specified herein.

8.4.2 Conditions

Temperature: As per the manufacturer's specification.

8.4.3 Parameters

Position (Field strength): $H_{min,\ PCD}$.

Supported data rates for PCD: *fc*/128, *fc*/64, *fc*/32, *fc*/16.

8.4.4 Pass Criteria

The test report shall include the number of passed tests versus the total number of tests, a test description and the number of different samples and the date of the tests.

8.5 Type B Extra Guard Time (EGT) PCD to PICC

8.5.1 Test Description

The purpose of this test is to check that the PCD meets the EGT requirements according to ISO/IEC 14443-3. The detailed test procedure is not further specified herein.

8.5.2 Conditions

Temperature: As per the manufacturer's specification.

© ISO/IEC 2007 – All rights reserved
Copyright International Organization for Standardization
Provided by IHS under license with ISO
No reproduction or networking permitted without license from IHS
Not for Resale

8.5.3 Parameters

Position (Field strength): $H_{min, PCD.}$

Supported data rate for PCD: *fc*/128, *fc*/64, *fc*/32, *fc*/16.

8.5.4 Pass Criteria

The test report shall include the number of passed tests versus the total number of tests, a test description and the number of different samples and the date of the tests.

8.6 Type B Extra Guard Time (EGT) PICC to PCD

8.6.1 Test Description

The purpose of this test is to check that the PCD can handle the EGT timings according to ISO/IEC 14443-3. The reference PICC shall send ATQB with minimum as well as with maximum EGT. The detailed test procedure is not further specified herein.

8.6.2 Conditions

Temperature: As per the manufacturer's specification

8.6.3 Parameters

Position (Field strength): $H_{min, PCD}$.

Supported data rate for PCD: *fc*/128, *fc*/64, *fc*/32, *fc*/16.

8.6.4 Pass Criteria

The test report shall include the number of passed tests versus the total number of tests, a test description and the number of different samples and the date of the tests.

8.7 Timing before PICC Type B Start-of-Frame (TR0 & TR1)

8.7.1 Test Description

The purpose of this test is to check that the PCD can handle the TR0 and TR1 timings according to ISO/IEC 14443-3. The Reference PICC shall send ATQB with minimum TR0 and TR1 as well as with maximum TR0 and TR1. The detailed test procedure is not further specified herein.

8.7.2 Conditions

Temperature: As per the manufacturer's specification.

8.7.3 Parameters

Table 2 — TR tolerance

Test case	TR0	TR1
1	TR0 min	TR1 min
2	TR0 max	TR1 max

Supported data rate for PCD: *fc*/128, *fc*/64, *fc*/32, *fc*/16.

© ISO/IEC 2007 – All rights reserved

Copyright International Organization for Standardization
Provided by IHS under license with ISO
No reproduction or networking permitted without license from IHS
Not for Resale

8.7.4 Pass Criteria

The test report shall include the number of passed tests versus the total number of tests, a test description and the date of the tests.

8.8 Timing before PCD Type B Start-of-Frame (TR2)

8.8.1 Test Description

This test shall check if a PCD frame is not sent before a minimum time TR2 after the PICC has sent ATQB. After ATQB the PCD shall send an AC frame. The detailed test procedure is not further specified herein.

The reference PICC shall send ATQB with parameters b3 and b2 as defined in the base standard.

8.8.2 Conditions

Temperature: As per the manufacturer's specification.

8.8.3 Parameters

Supported data rate for PCD: *fc*/128, *fc*/64, *fc*/32, *fc*/16.

8.8.4 Pass Criteria

The test report shall include the number of passed tests versus the total number of tests, a test description and the date of the tests.

9 Protocol Activation

9.1 Purpose

These tests provide a basic set of tests to be performed to check compliance to ISO/IEC 14443 protocol layers. All tests are based on and shall be evaluated according to the currently available standards.

All tests shall be performed with one specific field strength between $H_{min,\ PCD}$ and $H_{max,\ PCD}$ within the conformity volume of the PCD if not further specified.

All tests shall be performed at nominal temperature if not further specified.

9.2 Type A Activation - Handling of Collisions

9.2.1 Test Description

The purpose of this test is to check the correct behavior on collisions as defined in ISO/IEC 14443-3. The tests specified in ISO/IEC 10373-6:2001/Amd.3:2006, subclauses H.2.3 and H.2.4 should be used. The detailed test procedure is not further specified herein.

9.2.2 Pass Criteria

The test report shall state whether the response was according to ISO/IEC 14443-3 respectively to ISO/IEC 10373-6:2001/Amd.3:2006 or not. Additionally possible proprietary paths specified in ISO/IEC 14443-3:2001, 6.4.1, shall not negatively affect the report. The report shall include the number of samples tested and the date.

--`,,```,,,,````-`-`,,`,,`,`,,`---
© ISO/IEC 2007 – All rights reserved
Copyright International Organization for Standardization
Provided by IHS under license with ISO
No reproduction or networking permitted without license from IHS
Not for Resale

9.3 Type A Activation - Handling of RATS (including frame size selection)

9.3.1 Test Description

The purpose of this test is to check the correct behavior of RATS and the handling of ATS as defined in ISO/IEC 14443-4. The tests specified in ISO/IEC 10373-6:2001/Amd.3:2006, H.2.5 and H.2.7, should be used. The detailed test procedure is not further specified herein.

9.3.2 Pass Criteria

The test report shall state whether the response was according to ISO/IEC 14443-4 respectively to ISO/IEC 10373-6:2001/Amd.3:2006 or not. The report shall include the number of samples tested and the date.

9.4 Type A Activation - Handling of PPS

9.4.1 Test Description

The purpose of this test is to check the correct behavior on handling a PPS response as defined in ISO/IEC 14443-4. The tests specified in ISO/IEC 10373-6:2001/Amd.3:2006, H.2.6, should be used. The detailed test procedure is not further specified herein.

9.4.2 Pass Criteria

The test report shall state whether the response was according to ISO/IEC 14443-4 respectively to ISO/IEC 10373-6:2001/Amd.3:2006, or not. The report shall include the number of samples tested and the date.

9.5 Type A Activation - Handling of CID during Activation

9.5.1 Test Description

The purpose of this test is to check the correct behavior on handling CID during activation as defined in ISO/IEC 14443-4. The tests specified in ISO/IEC 10373-6:2001/Amd.3:2006, H.2.9, should be used. The detailed test procedure is not further specified herein.

9.5.2 Pass Criteria

The test report shall state whether the response was according to ISO/IEC 14443-4 respectively to ISO/IEC 10373-6:2001/Amd.3:2006, or not. The report shall include the number of samples tested and the date.

9.6 Type B Activation - Frame Size Selection

9.6.1 Test Description

The purpose of this test is to check the correct behavior of the frame size selection mechanism as defined in ISO/IEC 14443-3. The tests specified in ISO/IEC 10373-6:2001/Amd.3:2006, H.2.7, should be used.

9.6.2 Pass Criteria

The test report shall state whether the response was according to the scenario defined in ISO/IEC 10373-6:2001/Amd.3:2006. The report shall include the number of samples tested and the date.

© ISO/IEC 2007 – All rights reserved

Copyright International Organization for Standardization
Provided by IHS under license with ISO
No reproduction or networking permitted without license from IHS
Not for Resale

9.7 Type B Activation - Bit Rate Selection

9.7.1 Test Description

The purpose of this test is to check the correct behavior of the bit rate selection mechanism as defined in ISO/IEC 14443-3:2001/Amd.1:2005. The tests specified in ISO/IEC 10373-6:2001/Amd.5:2007 should be used.

9.7.2 Pass Criteria

The test report shall state whether the behavior was according to ISO/IEC 14443-3:2001/Amd.1:2005 respectively ISO/IEC 10373-6:2001/Amd.5:2007. The report shall include the number of samples tested and the date.

9.8 Type B Activation - Handling of CID during Activation

9.8.1 Test Description

The purpose of this test is to check the correct behavior on handling CID during activation as defined in ISO/IEC 14443-4. The tests specified in ISO/IEC 10373-6:2001/Amd.3:2006, H.2.9 should be used.

9.8.2 Pass Criteria

The test report shall state whether the response was according to ISO/IEC 14443-4 respectively to ISO/IEC 10373-6:2001/Amd.3:2006 or not. The report shall include the number of samples tested and the date.

9.9 Handling of the Polling Loop (Type A and B)

9.9.1 Test Description

The purpose of this test is to check the correct behavior during polling for Type A and Type B PICCs as defined in ISO/IEC 14443-3. The test specified in ISO/IEC 10373-6/Amd.3:2006, H.4.1, should be used. The detailed test procedure is not further specified herein.

9.9.2 Pass Criteria

The test report shall state whether the response was according to ISO/IEC 14443-3 respectively to ISO/IEC 10373-6/Amd.3:2006 or not. The report shall include the number of samples tested, the date of the tests and the used command set.

9.10 Data Exchange Protocol Tests - Error Detection and Recovery

The purpose of this test is to check the behavior of PCD when transmission errors occur according to ISO/IEC 14443-4. These tests specified in ISO/IEC 10373-6 cover standard communication blocks, blocks where the PCD uses chaining and blocks where the PICC uses chaining.

The PICC chaining tests could be performed without knowing dedicated command behavior on the device under test. Any command could be divided into two parts e.g. the response to a READ BINARY could be sent in two chained packets.

The PCD chaining is harder to achieve. If the higher layer functionality is not known in detail or a chaining command is not used in the application these tests could not be performed. Therefore it should be optional.

--`,,```,,,,````-`-`,,`,,`,`,,`---

© ISO/IEC 2007 – All rights reserved
Copyright International Organization for Standardization
Provided by IHS under license with ISO
No reproduction or networking permitted without license from IHS
Not for Resale

9.10.1 Test Description

The purpose of this test is to check the behavior of the PCD when transmission errors occur as defined in ISO/IEC 14443-4. The test specified in ISO/IEC 10373-6/Amd.3:2006, H.4.3, should be used. The detailed test procedure is not further specified herein.

9.10.2 Pass Criteria

The test report shall state whether the response was according to ISO/IEC 14443-4 respectively to ISO/IEC 10373-6/Amd.3:2006 or not. The report shall include the number of samples tested, the date of the tests and the used command set.

9.11 Data Exchange Protocol Tests - Request for Waiting Time Extension

9.11.1 Test Description

The purpose of this test is to check the behavior of the PCD when the PICC use a request for waiting time extension as defined in ISO/IEC 14443-4. The test specified in ISO/IEC 10373-6/Amd.3:2006, H.4.2, should be used. The detailed test procedure is not further specified herein.

9.11.2 Pass Criteria

The test report shall state whether the response was according to ISO/IEC 14443-4 and ISO/IEC 10373-6/Amd.3:2006 or not. The report shall include the number of samples tested, the date of the tests and the used command set.

© ISO/IEC 2007 – All rights reserved

Copyright International Organization for Standardization
Provided by IHS under license with ISO
No reproduction or networking permitted without license from IHS
Not for Resale

Annex A
(informative)

Definition of the Test Apparatus

A.1 Definition of the Reference PCD

TF2 understands the need and has accepted the task and will ask for contributions.

A.2 Definition of the Reference PICC for load modulation reception test

A.2.1 General

The signal at pin ‘load switching signal 847 kHz’ shall have a value between 0 and 4 V for stable switching of the recommended transistor N1.

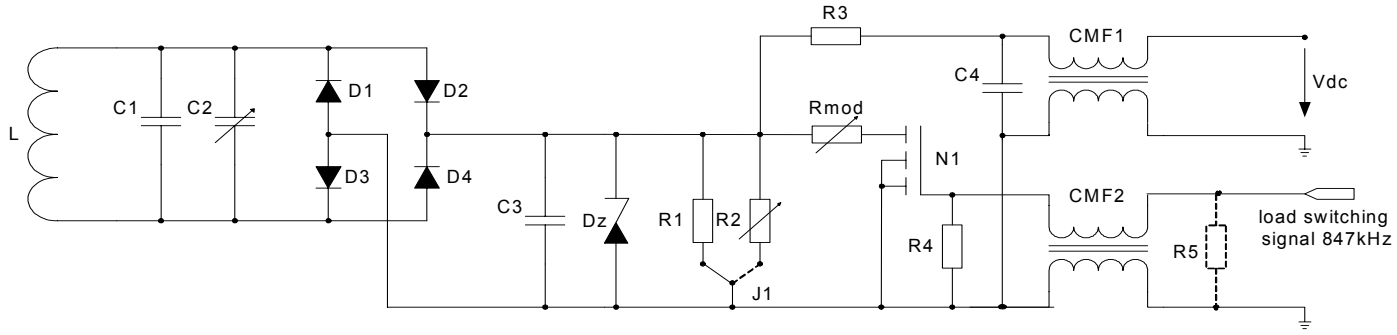

Figure A.1 — Reference PICC

© ISO/IEC 2007 – All rights reserved
Copyright International Organization for Standardization
Provided by IHS under license with ISO
No reproduction or networking permitted without license from IHS
Not for Resale

Table A.1 — Reference PICC

Component	Value	Comment
L	As defined in 10373-6	
R1	4,3 kΩ	Fixed load during resonant frequency adjustment
R2	Adjustable, 0 – 5 kΩ	Static loading adjustment
R3	10 kΩ	
R4	4,7 kΩ	
R5	Optional	Termination resistor for signal source
R_{mod}	Adjustable, 0 – 5 kΩ	Load modulation adjustment
C1	Stray capacitance < 5pF	
C2	5 - 30pF	Resonant frequency adjustment
C3	27 pF	
C4	1 nF	
D1, D2, D3, D4	Recommended: BAR43	
Dz	Recommended: BZX84, 10 V	
N1	N-MOS FET, 10pF max. output capacitance to ground Recommended: BSS83	
CMF1, CMF2	ZJYS81R5-2P50 (TDK)	Linear transformer specified for 13,56MHz

--`,,```,,,,````-`-`,,`,,`,`,,`---
© ISO/IEC 2007 – All rights reserved
Copyright International Organization for Standardization
Provided by IHS under license with ISO
No reproduction or networking permitted without license from IHS
Not for Resale

Annex B
(informative)

Test Tables

B.1 PICC

B.1.1 Type A and B

Table B.1 — Physical characteristics

Parameter	ISO Reference	Test method	Reference/Info
Dimensions	14443-1, 4.2		ISO/IEC 7810
Antenna zone	14443-1, A1.1	10373-6 AM 4, 3.1.2	Additional test for Class 1

Table B.2 — Additional physical characteristics

Parameter	ISO Reference	Test method	Reference/Info
Alternating magnetic field	14443-1, 4.3.5	10373-6 AM4, 5.1	

Table B.3 — CLASS 1 - Additional test - Physical layer

Parameter	ISO Reference	Test method	H[A/m]
Maximum loading effect H_R, H_P	14443-1, A.1.2	10373-6 AM4, 7.4	1.5

Table B.4 — Physical layer

Parameter	ISO Reference	Test method	Sideband	H [A/m]	Reference/Info
Load modulation amplitude	14443-2, 8.2.2	10373-6, 7	$fc + f_s$, $fc - f_s$	1.5, 2, 2.5...7.5	Value as specified in 14443-2, 8.2.2

Table B.5 — Physical layer - Informative

Parameter	ISO Reference	Test method	Reference/Info
Resonant frequency		10373-6 AM2, 7.3	

© ISO/IEC 2007 – All rights reserved
Copyright International Organization for Standardization
Provided by IHS under license with ISO
No reproduction or networking permitted without license from IHS
Not for Resale

Table B.6 — Protocol layer

Parameter	ISO Reference	Test method	Scenario	H[A/m]
Reaction to ISO/IEC14443-4 Scenarios	14443-4, 7	10373-6 AM1, G.5.2	32 to 52	1.5
Handling of PICC error detection	14443-4, 7	10373-6 AM1, G.5.3	53 to 57	1.5
PICC reaction on CID	14443-4, 7.1.1.2	10373-6 AM1, G.5.4	58 to 62	1.5
PICC reaction on NAD	14443-4, 7.1.1.3	10373-6 AM1, G.5.5	63 to 65	1.5
Generating the I/O character timing in reception mode		10373-6 AM1, G1.5		1.5
RFU values		10373-6 AM1, G1.5.1		1.5

B.1.2 Type A

Table B.7 — Physical layer – *fc*/128

Parameter	ISO Reference	Test method	Conditions	H[A/m]
PICC reception	14443-2, 8.1.2	10373-6, AM2, 7.2.2, Table 1	1 to 6	1.5, 4.5, 7.5

Table B.8 — Physical layer - Additional tests if *fc*/64 is supported

Parameter	ISO Reference	Test method	Conditions	H[A/m]
PICC reception	14443-2 AM2, 8.1.2.2	10373-6, AM5, Table 2	1 to 12	1.5, 4.5, 7.5

Table B.9 — Physical layer - Additional tests if *fc*/32 is supported

Parameter	ISO Reference	Test method	Conditions	H[A/m]
PICC reception	14443-2 AM2, 8.1.2.2	10373-6, AM5, Table 3	1 to 12	1.5, 4.5, 7.5

Table B.10 — Physical layer - Additional tests if *fc*/16 is supported

Parameter	ISO Reference	Test method	Conditions	H[A/m]
PICC reception	14443-2 AM2, 8.1.2.2	10373-6, AM5, Table 4	1 to 6	1.5, 4.5, 7.5

© ISO/IEC 2007 – All rights reserved
Copyright International Organization for Standardization
Provided by IHS under license with ISO
No reproduction or networking permitted without license from IHS
Not for Resale

Table B.11 — Timing

Parameter	ISO Reference	Test method	No	Last bit	H[A/m]
Frame delay time	14443-3, 6.1.2.	10373-6 AM1, G.30	1	(1)b	1.5, 4.5, 7.5
Frame delay time	14443-3, 6.1.2.	10373-6 AM1, G.30	1	(0)b	1.5, 4.5, 7.5
Frame delay time	14443-3, 6.1.2.	10373-6 AM1, G.30	2	(1)b	1.5, 4.5, 7.5
Frame delay time	14443-3, 6.1.2.	10373-6 AM1, G.30	2	(0)b	1.5, 4.5, 7.5
RATS and deact. frame time	14443-4, 8.1	10373-6 AM1, G.30	3	(1)b	1.5, 4.5, 7.5
RATS and deact. frame time	14443-4, 8.1	10373-6 AM1, G.30	3	(0)b	1.5, 4.5, 7.5

Table B.12 — Protocol layer

Parameter	ISO Reference	Test method	Scenario	H[A/m]
Polling	14443-3, 5	10373-6 AM2, G.3.2	1	1.5
State transitions IDLE state	14443-3, 6.2, 6.3, 6.4	10373-6 AM2, G.3.4	2	1.5
State transitions READY(1) state	14443-3, 6.2, 6.3, 6.4	10373-6 AM2, G.3.4	3	1.5
State transitions READY(2) state	14443-3, 6.2, 6.3, 6.4	10373-6 AM2, G.3.4	4	1.5
State transitions READY(3) state	14443-3, 6.2, 6.3, 6.4	10373-6 AM2, G.3.4	5	1.5
State transitions ACTIVE state	14443-3, 6.2, 6.3, 6.4	10373-6 AM2, G.3.4	6	1.5
State transitions HALT state	14443-3, 6.2, 6.3, 6.4	10373-6 AM2, G.3.4	7	1.5
State transitions READY*(1) state	14443-3, 6.2, 6.3, 6.4	10373-6 AM2, G.3.4	8	1.5
State transitions READY *(2) state	14443-3, 6.2, 6.3, 6.4	10373-6 AM2, G.3.4	9	1.5
State transitions READY*(3) state	14443-3, 6.2, 6.3, 6.4	10373-6 AM2, G.3.4	10	1.5
State transitions ACTICE * state	14443-3, 6.2, 6.3, 6.4	10373-6 AM2, G.3.4	11	1.5
State transitions PROTOCOL state	14443-3, 6.2, 6.3, 6.4	10373-6 AM2, G.3.4	12	1.5
Anticollision	14443-3, 6.3.2	10373-6 AM2, G.3.5	13	1.5
Handling of RATS	14443-4, 5.6.1	10373-6 AM2, G.3.6	14	1.5
Handling of RATS	14443-4, 5.6.1	10373-6 AM2, G.3.6	15	1.5
Handling of PPS request	14443-4, 5.6.2	10373-6 AM2, G.3.7	16	1.5
Handling of PPS request	14443-4, 5.6.2	10373-6 AM2, G.3.7	17	1.5
Handling of PPS request	14443-4, 5.6.2	10373-6 AM2, G.3.7	18	1.5
Handling of PPS request	14443-4, 5.6.2	10373-6 AM2, G.3.7	19	1.5
Handling of FSD	14443-4, 5.1	10373-6 AM2, G.3.8	20	1.5

B.1.3 Type B

Table B.13 — Physical layer - *fc*/128

Parameter	ISO Reference	Test method	Condition	H [A/m]
PICC reception	14443-2, 9.1.2	10373-6, AM2, 7.2.3, Table 5	1 to 12	1.5, 4.5, 7.5

© ISO/IEC 2007 – All rights reserved
Copyright International Organization for Standardization
Provided by IHS under license with ISO
No reproduction or networking permitted without license from IHS
Not for Resale

Table B.14 — Physical layer - Additional tests if *fc*/64 is supported

Parameter	ISO Reference	Test method	Condition	H [A/m]
PICC reception	14443-2, 9.1.2	10373-6, AM2, 7.2.3, Table 5	1 to 12	1.5, 4.5, 7.5

Table B.15 — Physical layer - Additional tests if *fc*/32 is supported

Parameter	ISO Reference	Test method	Condition	H [A/m]
PICC reception	14443-2, 9.1.2	10373-6 AM5, Table 6	1 to 6	1.5, 4.5, 7.5

Table B.16 — Physical layer - Additional tests if *fc*/16 is supported

Parameter	ISO Reference	Test method	Condition	H [A/m]
PICC reception	14443-2, 9.1.2	10373-6 AM5, Table 7	1 to 6	1.5, 4.5, 7.5

Table B.17 — Timing

Parameter	ISO Reference	Test method	No	H [A/m]
SOF low	14443-3, 7.1.4	10373-6 AM1, G.31	1	1.5, 4.5, 7.5
SOF high	14443-3, 7.1.4	10373-6 AM1, G.31	2	1.5, 4.5, 7.5
EOF low	14443-3, 7.1.5	10373-6 AM1, G.31	3	1.5, 4.5, 7.5
Bit boundaries	14443-3, 7.1.1	10373-6 AM1, G.31	4	1.5, 4.5, 7.5
EGT PICC to PCD	14443-3, 7.1.2	10373-6 AM1, G.31	5	1.5
Tr0 for ATQB	14443-3, 7.1.6	10373-6 AM1, G.31	6	1.5
Tr1 for ATQB	14443-3, 7.1.6	10373-6 AM1, G.31	7	1.5
Tr0 Not ATQB	14443-3, 7.1.6	10373-6 AM1, G.31	8	1.5
Tr1 Not ATQB	14443-3, 7.1.6	10373-6 AM1, G.31	9	1.5

© ISO/IEC 2007 – All rights reserved

Copyright International Organization for Standardization
Provided by IHS under license with ISO
No reproduction or networking permitted without license from IHS
Not for Resale

Table B.18 — Protocol layer

Parameter	ISO Reference	Test method	Scenario	H[A/m]
Polling	14443-3, 5	10373-6 AM1, G.4.2	21	1.5
PICC Reception	14443-3, 7.1	10373-6 AM1, G.4.3	22	1.5
IDLE state	14443-3, 7.4-7.12	10373-6 AM1, G.4.4	23	1.5
READY REQUESTED sub-state	14443-3, 7.4-7.12	10373-6 AM1, G.4.4	24	1.5
READY DECLARED sub-state	14443-3, 7.4-7.12	10373-6 AM1, G.4.4	25	1.5
HALT state	14443-3, 7.4-7.12	10373-6 AM1, G.4.4	26	1.5
ACTIVE state	14443-3, 7.4-7.12	10373-6 AM1, G.4.4	27	1.5
Anticollision	14443-3, 7.4-7.12	10373-6 AM1, G.4.5	28	1.5
Handling of ATTRIB	14443-3, 7.10	10373-6 AM1, G.4.6	29	1.5
Handling of ATTRIB	14443-3, 7.10	10373-6 AM1, G.4.6	30	1.5
Handling of Maximum frame size	14443-3, 7.10.4	10373-6 AM1, G.4.7	31	1.5

B.2 PCD

Field strength H corresponds to a specific distance in the volume of the PCD under test. Tests at dedicated field strengths are only possible if the PCD field strength is sufficient. Testable field strength PCD H_{max} depends on the maximum field strength of the PCD under test.

B.2.1 Type A and B

Table B.19 — Physical layer

Parameter	ISO Reference	Test method	Conditions	Reference/Info
Carrier Frequency	14443-2, 6.1			
Maximum operating volume field H_{max}	14443-2, 6.2	10373-6, 8.1		
Maximum operating volume field H_{min}	14443-2, 6.2	10373-6, 8.1		
Power transfer PCD to PICC	14443-2, 6	10373-6, 8.2		
Load modulation reception	14443-2, 8.2.2	10373-6 AM4		

Table B.20 — Test coverage report - Protocol layer

Parameter	ISO Reference	Test method	No	H[A/m]	Reference/Info
Chaining (Command >16bytes)			1	$H_{min, PCD}$	
NAD handling			2	$H_{min, PCD}$	

--`,,```,,,,````-`-`,,`,,`,`,,`---
Copyright International Organization for Standardization
Provided by IHS under license with ISO
No reproduction or networking permitted without license from IHS
Not for Resale
© ISO/IEC 2007 – All rights reserved

Table B.21 — PCD RFU report - Protocol layer

Name	PCD command	RFU field/value	H[A/m]
Short frame type A	REQA/WUPA	RFU values	$H_{min, PCD}$
SEL coding	SEL	RFU values (b4 to b1)	$H_{min, PCD}$
AFI	REQB/WUPB	RFU values	$H_{min, PCD}$
PARAM	REQB/WUPB	RFU values (b8 to b5)	$H_{min, PCD}$
PARAM	REQB/WUPB	RFU values (b3 to b1)	$H_{min, PCD}$
PARAM1	ATTRIB	RFU field (b2 to b1)	$H_{min, PCD}$
Minimum TR0	ATTRIB	RFU values (b8 to b7)	$H_{min, PCD}$
Minimum TR1	ATTRIB	RFU values (b6 to b6)	$H_{min, PCD}$
PARAM2	ATTRIB	RFU values (b4 to b1)	$H_{min, PCD}$
PARAM3	ATTRIB	RFU field (b8 to b5)	$H_{min, PCD}$
PARAM4	ATTRIB	RFU field (b8 to b5)	$H_{min, PCD}$
PARAM4	ATTRIB	RFU value (b4 to b1)	$H_{min, PCD}$

Table B.22 — CLASS 1 - Additional test - Physical layer

Parameter	ISO Reference	Test method	H[A/m]	Reference/Info
Field strength of PCD	14443-1, A1.2	10373-6, AM 4, 8.5	$H_{min, PCD}$	

Table B.23 — Test temperatures proposal

Parameter	Layer	Temperature [°C][A]	Reference/Info
Test temperature	Physical characteristics	23 °C ± 2 °C	
Test temperature	Physical layer	23 °C ± 2 °C, 50 °C ± 2 °C, 0 °C ± 3 °C	
Test temperature	Timing	23 °C ± 2 °C, 50 °C ± 2 °C, 0 °C ± 3 °C	
Test temperature	Protocol layer	23 °C ± 2 °C	

[A] Temperature tolerances accord to IEC 60068 Environmental testing.

© ISO/IEC 2007 – All rights reserved

Copyright International Organization for Standardization
Provided by IHS under license with ISO
No reproduction or networking permitted without license from IHS
Not for Resale

B.2.2 Type A

Table B.24 — Physical layer

Parameter	ISO Reference	Test method	H[A/m]
Modulation pulse shape – residual carrier	14443-2, 8.1.2	10373-6, 8.3 10373-6 AM4, A.I	$H_{min, PCD}$, 4.5, PCD H_{max}
Modulation pulse shape – rise time t_3	14443-2, 8.1.2	10373-6, 8.3 10373-6 AM4, A.I	$H_{min, PCD}$, 4.5, PCD H_{max}
Modulation pulse shape – fall time t_1-t_2	14443-2, 8.1.2	10373-6, 8.3 10373-6 AM4, A.I	$H_{min, PCD}$, 4.5, PCD H_{max}
Modulation pulse shape – max. overshoot	14443-2, 8.1.2	10373-6, 8.3 10373-6 AM4, A.I	$H_{min, PCD}$, 4.5, PCD H_{max}
Modulation pulse shape – max. undershoot	14443-2, 8.1.2	10373-6, 8.3 10373-6 AM4, A.I	$H_{min, PCD}$, 4.5, PCD H_{max}

Table B.25 — Timing

Parameter	ISO Reference	Test method	H [A/m]
Frame delay time PICC to PCD	14443-3, 6.3.1	10373-6 AM3, H.2.1.	$H_{min, PCD}$, 4.5, PCD H_{max}
Request guard time	14443-3, 6.3.4	10373-6 AM3, H.2.2.	$H_{min, PCD}$, 4.5, PCD H_{max}

© ISO/IEC 2007 – All rights reserved
Copyright International Organization for Standardization
Provided by IHS under license with ISO
No reproduction or networking permitted without license from IHS
Not for Resale

Table B.26 — Protocol layer

Parameter	ISO Reference	Test method	Scenario	H[A/m]
Handling of bit collision during ATQA	14443-3, 6.4.2	10373-6, H.2.3		$H_{min, PCD}$
Handling of anticollision loop	14443-3, 6.4.3	10373-6, H.2.4	H1	$H_{min, PCD}$
Handling of anticollision loop	14443-4, 6.4.3	10373-6, H.2.4	H2	$H_{min, PCD}$
Handling of anticollision loop	14443-4, 6.4.3	10373-6, H.2.4	H3	$H_{min, PCD}$
Handling of anticollision loop	14443-4, 6.4.3	10373-6, H.2.4	H4	$H_{min, PCD}$
Handling of RATS and ATS	14443-4, 5.6.1.1	10373-6, H.2.5	H5	$H_{min, PCD}$
Handling of RATS and ATS	14443-4, 5.6.1.1	10373-6, H.2.5	H6	$H_{min, PCD}$
Handling of RATS and ATS	14443-4, 5.6.1.1	10373-6, H.2.5	H7	$H_{min, PCD}$
Handling of PSS response	14443-4, 5.6.2.1	10373-6, H.2.6	H8	$H_{min, PCD}$
Handling of PSS response	14443-4, 5.6.2.1	10373-6, H.2.6	H9	$H_{min, PCD}$
Frame size selection Mechanism	14443-4, 5.2	10373-6, H.2.7	H10	$H_{min, PCD}$
Handling of Start-up Frame Guard Time	14443-4, 5.2.5	10373-6, H.2.8	H11	$H_{min, PCD}$
Handling of the CID	14443-4, 5.6.3	10373-6, H.2.9	H12	$H_{min, PCD}$
Handling of the polling loop	14443-3, 5	10373-6, H.4.1		$H_{min, PCD}$
React. of PCD to request waiting ext.	14443-4, 7.3	10373-6, H.4.2	H16	$H_{min, PCD}$
React. of PCD to request waiting ext.	14443-4, 7.5.5	10373-6, H.4.2	H17	$H_{min, PCD}$
Error detection / transmission error	14443-4, 7.5.5; Annex B Sc. 8	10373-6, H.4.3	H18	$H_{min, PCD}$
Error detection / transmission error	14443-4, 7.5.5	10373-6, H.4.3	H19	$H_{min, PCD}$
Error detection / transmission error	14443-4, 7.5.5	10373-6, H.4.3	H20	$H_{min, PCD}$
Error detection / transmission error	14443-4, 7.5.5	10373-6, H.4.3	H21	$H_{min, PCD}$
Error detection / transmission error	14443-4, 7.5.5; Annex B Sc.19	10373-6, H.4.3	H22	$H_{min, PCD}$
Error detection / transmission error	14443-4, 7.5.5	10373-6, H.4.3	H23	$H_{min, PCD}$
Error detection / transmission error	14443-4, 7.5.5; Annex B Sc. 10	10373-6, H.4.3	H24	$H_{min, PCD}$
Error detection / transmission error	14443-4, 7.5.5; Annex B Sc. 13	10373-6, H.4.3	H25	$H_{min, PCD}$
Error detection / transmission error	14443-4, 7.5.5; Annex B Sc. 16	10373-6, H.4.3	H26	$H_{min, PCD}$
Error detection / transmission error	14443-4, 7.5.5; Annex B Sc. 17	10373-6, H.4.3	H27	$H_{min, PCD}$
Error detection / transmission error	14443-4, 7.5.5; Annex B Sc. 20	10373-6, H.4.3	H28	$H_{min, PCD}$
Error detection / transmission error	14443-4, 7.5.5	10373-6, H.4.3	H29	$H_{min, PCD}$
Handling of NAD during chaining	14443-4, 7.5.5	10373-6, H.4.4		$H_{min, PCD}$
Continuous monitoring of packets sent by PCD	14443-4, 7.5.5	10373-6, H.5		$H_{min, PCD}$

© ISO/IEC 2007 – All rights reserved

Copyright International Organization for Standardization
Provided by IHS under license with ISO
No reproduction or networking permitted without license from IHS
Not for Resale

Table B.27 — Optional bit rates *fc*/64, *fc*/32, *fc*/16 - Protocol layer

Parameter	ISO Reference	Test method	H[A/m]
High bit rate selection mechanism	14443-4, 5.3.3	10373-6 AM5, K.1	$H_{min,\ PCD}$

B.2.3 Type B

Table B.28 — Physical layer

Parameter	ISO Reference	Test method	H[A/m]
Modulation pulse shape – modulation index	14443-2, 9.1.2	10373-6, 8.3 10373-6 AM4, A.I	$H_{min,\ PCD}$, 4.5, PCD H_{max}
Modulation pulse shape – rise time	14443-2, 9.1.2	10373-6, 8.3 10373-6 AM4, A.I	$H_{min,\ PCD}$, 4.5, PCD H_{max}
Modulation pulse shape – fall time	14443-2, 9.1.2	10373-6, 8.3 10373-6 AM4, A.I	$H_{min,\ PCD}$, 4.5, PCD H_{max}
Modulation pulse shape – overshoot	14443-2, 9.1.2	10373-6, 8.3 10373-6 AM4, A.I	$H_{min,\ PCD}$, 4.5, PCD H_{max}
Modulation pulse shape – undershoot	14443-2, 9.1.2	10373-6, 8.3 10373-6 AM4, A.I	$H_{min,\ PCD}$, 4.5, PCD H_{max}

Table B.29 — Timing

Parameter	ISO Reference	Test method	H [A/m]
SOF low	14443-3, 7.1.4	10373-6 AM3, H.3.1	$H_{min,\ PCD}$, 4.5, PCD H_{max}
EOF low	14443-3, 7.1.5	10373-6 AM3, H.3.1	$H_{min,\ PCD}$, 4.5, PCD H_{max}
Bit boundaries	14443-3, 7.1.1	10373-6 AM3, H.3.1	$H_{min,\ PCD}$, 4.5, PCD H_{max}
EGT PCD to PICC	14443-3, 7.1.2	10373-6 AM3, H.3.1	$H_{min,\ PCD}$, 4.5, PCD H_{max}
EGT PICC to PCD	14443-3, 7.1.2		$H_{min,\ PCD}$, 4.5, PCD H_{max}
Minimum Delay EOF/SOF	14443-3, 7.1.7	10373-6 AM3, H.3.1	$H_{min,\ PCD}$, 4.5, PCD H_{max}

© ISO/IEC 2007 – All rights reserved
Copyright International Organization for Standardization
Provided by IHS under license with ISO
No reproduction or networking permitted without license from IHS
Not for Resale

Table B.30 — Protocol layer

Parameter	ISO Reference	Test method	Scenario	H[A/m]
Frame size selection mechanism	14443-3, 7.9	10373-6, H.3.2	H13	$H_{min, PCD}$
Handling of the CID	14443-3, 7.10	10373-6, H.3.3	H14	$H_{min, PCD}$
Handling of the CID	14443-3, 7.10	10373-6, H.3.3	H15	$H_{min, PCD}$
Handling of the polling loop	14443-3, 5	10373-6, H.4.1		$H_{min, PCD}$
React. of PCD to request waiting ext.	14443-4, 7.3	10373-6, H.4.2	H16	$H_{min, PCD}$
React. of PCD to request waiting ext.	14443-4, 7.5.5	10373-6, H.4.2	H17	$H_{min, PCD}$
Error detection / transmission error	14443-4, 7.5.5; Annex B Sc. 8	10373-6, H.4.3	H18	$H_{min, PCD}$
Error detection / transmission error	14443-4, 7.5.5	10373-6, H.4.3	H19	$H_{min, PCD}$
Error detection / transmission error	14443-4, 7.5.5	10373-6, H.4.3	H20	$H_{min, PCD}$
Error detection / transmission error	14443-4, 7.5.5	10373-6, H.4.3	H21	$H_{min, PCD}$
Error detection / transmission error	14443-4, 7.5.5; Annex B Sc.19	10373-6, H.4.3	H22	$H_{min, PCD}$
Error detection / transmission error	14443-4, 7.5.5	10373-6, H.4.3	H23	$H_{min, PCD}$
Error detection / transmission error	14443-4, 7.5.5; Annex B Sc. 10	10373-6, H.4.3	H24	$H_{min, PCD}$
Error detection / transmission error	14443-4, 7.5.5; Annex B Sc. 13	10373-6, H.4.3	H25	$H_{min, PCD}$
Error detection / transmission error	14443-4, 7.5.5; Annex B Sc. 16	10373-6, H.4.3	H26	$H_{min, PCD}$
Error detection / transmission error	14443-4, 7.5.5; Annex B Sc. 17	10373-6, H.4.3	H27	$H_{min, PCD}$
Error detection / transmission error	14443-4, 7.5.5; Annex B Sc. 20	10373-6, H.4.3	H28	$H_{min, PCD}$
Error detection / transmission error	14443-4, 7.5.5	10373-6, H.4.3	H29	$H_{min, PCD}$
Handling of NAD during chaining	14443-4, 7.5.5	10373-6, H.4.4		$H_{min, PCD}$
Continuous monitoring of packets sent by PCD	14443-4, 7.5.5	10373-6, H.5		$H_{min, PCD}$

Table B.31 — Optional bit rates *fc*/64, *fc*/32, *fc*/16 - Protocol layer

Parameter	ISO Reference	Test method	H[A/m]
High bit rate selection mechanism	14443-3, 7.10.4	10373-6 AM5, K.2	$H_{min, PCD}$

© ISO/IEC 2007 – All rights reserved

Copyright International Organization for Standardization
Provided by IHS under license with ISO
No reproduction or networking permitted without license from IHS
Not for Resale

Bibliography

[1] ISO/IEC Directives, Part 2, *Rules for the structure and drafting of International Standards*, 2001

[2] ISO/IEC TR 10000-1, *Information technology — Framework and taxonomy of International Standardized Profiles — Part 1: General principles and documentation framework*

[3] ISO 10241, *International terminology standards — Preparation and layout*

[4] ISO 128-30, *Technical drawings — General principles of presentation — Part 30: Basic conventions for views*

[5] ISO 128-34, *Technical drawings — General principles of presentation — Part 34: Views on mechanical engineering drawings*

[6] ISO 128-40, *Technical drawings — General principles of presentation — Part 40: Basic conventions for cuts and sections*

[7] ISO 128-44, *Technical drawings — General principles of presentation — Part 44: Sections on mechanical engineering drawings*

[8] ISO 31 (all parts), *Quantities and units*

[9] IEC 60027 (all parts), *Letter symbols to be used in electrical technology*

[10] ISO 1000, *SI units and recommendations for the use of their multiples and of certain other units*

[11] ISO 690, *Documentation — Bibliographic references — Content, form and structure*

[12] ISO 690-2, *Information and documentation — Bibliographic references — Part 2: Electronic documents or parts thereof*

--`,,```,,,,````-`-`,,`,,`,`,,`---

© ISO/IEC 2007 – All rights reserved

Copyright International Organization for Standardization
Provided by IHS under license with ISO
No reproduction or networking permitted without license from IHS

Not for Resale

--`,,```,,,,````-`-`,,`,,`,`,,`---

Copyright International Organization for Standardization
Provided by IHS under license with ISO
No reproduction or networking permitted without license from IHS

Not for Resale

ICS 35.240.15

Price based on 26 pages

© ISO/IEC 2007 – All rights reserved
Copyright International Organization for Standardization
Provided by IHS under license with ISO
No reproduction or networking permitted without license from IHS
Not for Resale