INTERNATIONAL STANDARD

ISO/IEC 11579-2

First edition
1999-09-01

Information technology — Telecommunications and information exchange between systems — Private integrated services network —

Part 2:
Reference configuration for HS-PISN Exchanges (HS-PINX)

Technologies de l'information — Télécommunications et échange d'information entre systèmes — Réseau privé avec intégration de services —

Partie 2: Configuration de référence pour échanges HS-PISN (HS-PINX)

Reference number
ISO/IEC 11579-2:1999(E)

--`,,```,,,,````-`-`,,`,,`,`,,`---

Copyright International Organization for Standardization
Provided by IHS under license with ISO
No reproduction or networking permitted without license from IHS

Not for Resale

Contents

1 Scope **1**

2 Normative references **1**

3 Symbols and abbreviations **1**

4 Definitions **2**

5 HS-PINX reference configuration **2**

Annex A (informative) **Example for the application of the PINX reference configuration to an HS environment** **3**

Annex B (informative) **Example for conversion functions performed by an LAN-IWU** **4**

© ISO/IEC 1999

All rights reserved. Unless otherwise specified, no part of this publication may be reproduced or utilized in any form or by any means, electronic or mechanical, including photocopying and microfilm, without permission in writing from the publisher.

ISO/IEC Copyright Office • Case postale 56 • CH-1211 Genève 20 • Switzerland

Printed in Switzerland

Copyright International Organization for Standardization
Provided by IHS under license with ISO
No reproduction or networking permitted without license from IHS

Not for Resale

Foreword

ISO (the International Organization for Standardization) and IEC (the International Electrotechnical Commission) form the specialized system for worldwide standardization. National bodies that are members of ISO or IEC participate in the development of International Standards through technical committees established by the respective organization to deal with particular fields of technical activity. ISO and IEC technical committees collaborate in fields of mutual interest. Other international organizations, governmental and non-governmental, in liaison with ISO and IEC, also take part in the work.

International Standards are drafted in accordance with the rules given in the ISO/IEC Directives, Part 3.

In the field of information technology, ISO and IEC have established a joint technical committee, ISO/IEC JTC 1. Draft International Standards adopted by the joint technical committee are circulated to national bodies for voting. Publication as an International Standard requires approval by at least 75 % of the national bodies casting a vote.

International Standard ISO/IEC 11579-2 was prepared by Joint Technical Committee ISO/IEC JTC 1, *Information technology*, Subcommittee SC 6, *Telecommunications and information exchange between systems.*

ISO/IEC 11579 consists of the following parts, under the general title *Information technology — Telecommunications and information exchange between systems — Private integrated services network*:

— *Part 1: Reference configuration for PISN Exchanges (PINX)*

— *Part 2: Reference configuration for HS-PISN Exchanges (HS-PINX)*

Annexes A and B of this part of ISO/IEC 11579 are for information only.

--`,,```,,,,````-`-`,,`,,`,`,,`---

Copyright International Organization for Standardization
Provided by IHS under license with ISO
No reproduction or networking permitted without license from IHS Not for Resale

Introduction

The purpose of a reference configuration (RC) is to define reference points by means of identifying functional groupings which interwork at the reference points.

Suitable definitions of functional groupings allow the proper definition of the behaviour and/or performance of such groupings, merely by referring to the corresponding reference points.

This applies to aspects such as:

— delimitation of areas of responsibility, e.g. for management, operation etc.;

— partitioning and apportioning of performance values;

— numbering;

— termination of signalling protocols.

ISO/IEC 11579 consists of several parts. This part of ISO/IEC 11579 defines the RC for a High Speed Private Integrated Services Network (HS-PISN) exchange (HS-PINX), including a description for modelling complete HS-PISNs consisting of more than one HS-PINX, i.e. PINXs which may be based on technologies such as broad-band ISDN, LAN, etc.

The concept of this part of ISO/IEC 11579 is based on the assumption that such inter-PISN-exchange connections are routed through an intervening network, which can be of any nature from, in the trivial case, a mere physical medium like a piece of wire, up to a switching network, such as the public B-ISDN, provided it offers the required capabilities for carrying user and control information between the HS-PISN exchanges. In the case that the IVN is represented by a public B-ISDN, the HS-PISN and the public B-ISDN interwork in an Overlay Scenario.

Copyright International Organization for Standardization
Provided by IHS under license with ISO
No reproduction or networking permitted without license from IHS Not for Resale

Information technology — Telecommunications and information exchange between systems — Private integrated services network —

Part 2:
Reference configuration for HS-PISN Exchanges (HS-PINX)

1 Scope

This part of ISO/IEC 11579 specifies a reference configuration (RC) for high-speed private integrated services network exchanges (HS-PINX), for their interconnection to form high-speed private integrated services networks (HS-PISN). The configuration is intended to provide guidance for the specification of PINX capabilities, but does not impose any specific implementation of a HS-PINX.

This RC describes a conceptual HS-PINX. By combining multiple HS-PINXs to a high-speed private integrated services network the RC becomes applicable to a HS-PISN. This is generically described in ISO/IEC 11579-1.

This RC satisfies the support of all HS applications, such as LAN, MAN, B-ISDN, etc.

2 Normative references

The following standards contain provisions which, through reference in this text, constitute provisions of this part of ISO/IEC 11579. At the time of publication, the editions indicated were valid. All standards are subject to revision, and parties to agreements based on this part of ISO/IEC 11579 are encouraged to investigate the possibility of applying the most recent editions of the standards indicated below. Members of IEC and ISO maintain registers of currently valid International Standards.

[1] ITU-T (formerly CCITT) Recommendation I.411 (1988), ISDN-User-Network Interfaces - Reference Configurations

[2] ITU-T (formerly CCITT) Recommendation I.570 (1992), Public/Private ISDN Interworking

3 Symbols and abbreviations

AAL	ATM Adaptation Layer
ATM	Asynchronous Transfer Mode
B-PISN	Broadband-PISN
B-PINX	Broadband-PINX
B-CDBS	Broadband Connectionless Data Bearer Service
BT	Bit Layer
CL	ConnectionLess
CLNAP	ConnectionLess Network Access Protoocl layer
CO	Connection Oriented
HL	Higher Layers

--`,,```,,,,````-`-`,,`,,`,`,,`---

Copyright International Organization for Standardization
Provided by IHS under license with ISO
No reproduction or networking permitted without license from IHS Not for Resale

HS	High Speed
IWU	InterWorking Unit
LAN	Local Area Network
LLC1	Logical Link Control type 1 layer
MAC	Medium Access Control
MAN	Metropolitan Area Network
PHY	PHYsical layer
PINX	Private Integrated Services Network Exchange
PISN	Private Integrated Services Network
RC	Reference Configuration
PTS	Private Termination System functional grouping
RP	Reference Point
SNAP	SubNetwork Access Protocol
SW	SWitching functional grouping
TC	Transmission Convergence sublayer
TE	Terminal Equipment functional grouping
TM	TransMission layer

4 Definitions

For the purposes of this part of ISO/IEC 11579, the definitions given in ISO/IEC 11579-1 and the following definitions apply.

4.1
high-speed
a qualifier indicating transmission of user information at rates higher than 64 kbit/s

4.2
high-speed private integrated services network
a private network that provides connection-oriented and/or connectionless services of any kind of technology suitable for high-speed user information switching and transmission

NOTE When the switching and transmission technology is based on ATM, the HS-PISN is called a broad-band private integrated services network (B-PISN).

5 HS-PINX reference configuration

The reference configuration as defined in ISO/IEC 11579-1 shall also apply to an HS environment. Annex A shows an example.

Copyright International Organization for Standardization
Provided by IHS under license with ISO
No reproduction or networking permitted without license from IHS Not for Resale

Annex A
(informative)

Example for the application of the PINX reference configuration to an HS environment

An HS environment is shown in Figure A.1.

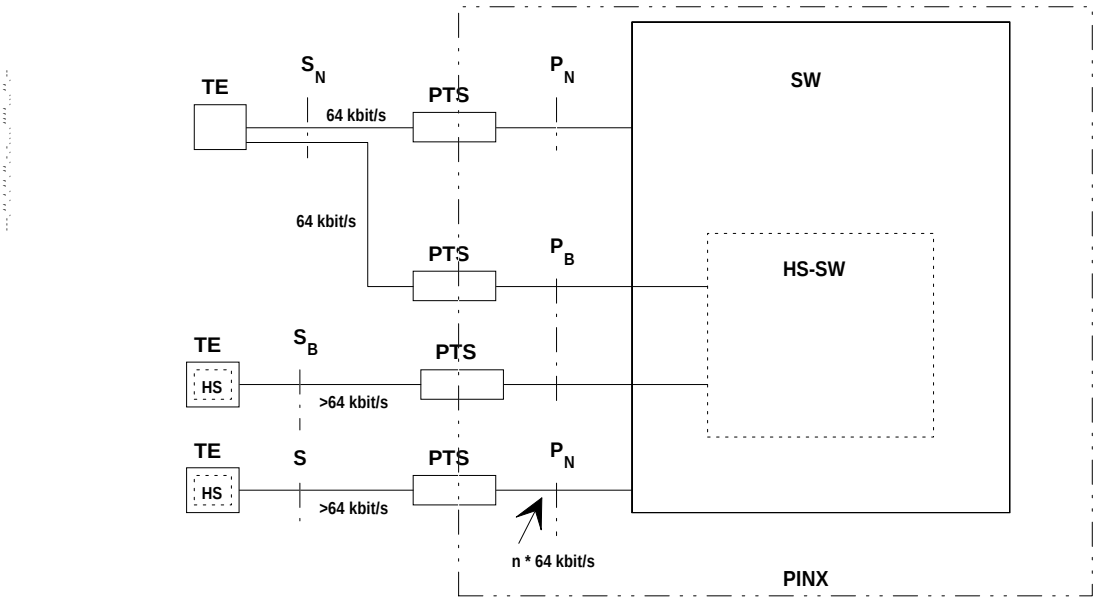

Figure A.1 — Application of the PINX reference configuration to an HS environment

For clarity some simplifications have been applied to Figure A.1:

— where necessary it shows multiple instances of functional groupings;

— statements related to the T, to the Q and to the C reference points have been omitted.

A TE as specified generiсly in part 1 of ISO/IEC 11579 can be served by the narrow-band as well as by a broad-band subset of the SW functional grouping.

A TE offering HS capabilities (i.e. using PINX bearer capabilities of >64 kbit/s) can be served by the HS-SW functional grouping, but can as well be served by n*64 kbit/s services.

This universal connectivity of N-TEs and HS-TEs to N-SWs and B-SWs relies on a versatile PTS concept that allows the PTS to perform the corresponding adaptation functions between N-TEs and HS-SWs and vice versa.

Also a LAN-IWU (so called LAN bridge) is considered a specific case of a PTS (not shown in Figure A.1). Its implementation depends on the specific conversion requirements between the bearer capabilities used by the TEs and the SWs.

Copyright International Organization for Standardization
Provided by IHS under license with ISO
No reproduction or networking permitted without license from IHS
Not for Resale

Annex B
(informative)

Example for conversion functions performed by an LAN-IWU

An example for the conversion functions of an LAN-IWU is given in Figure B.1.

The figure depicts a bridge-type LAN-IWU connected to an ATM-based PINX and providing a connectionless service on top of the ATM adaptation layer (B-CDBS).

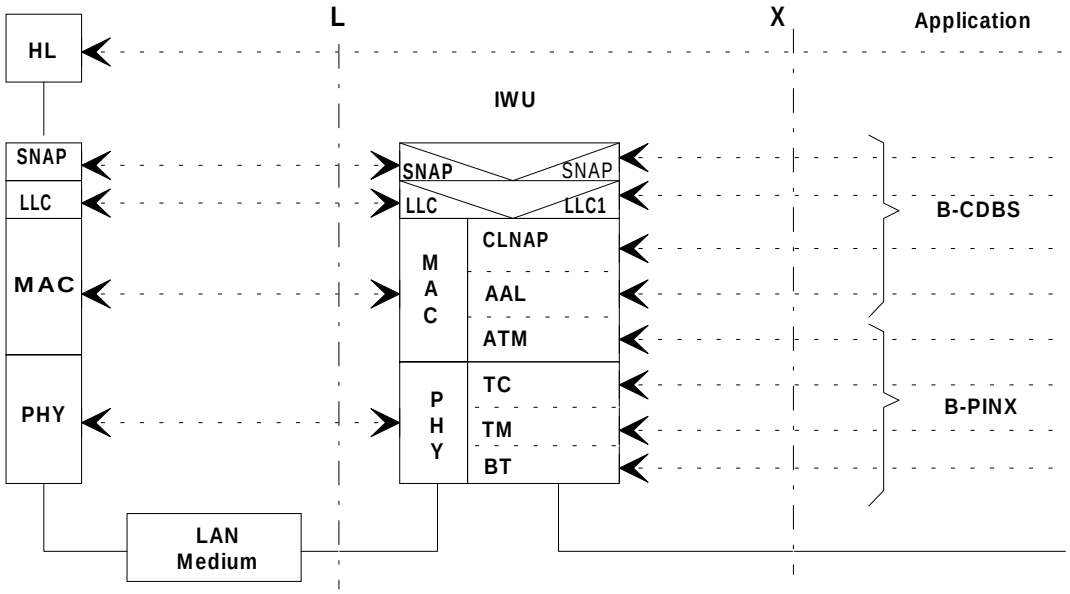

Figure B.1 — Example for conversion functions of an LAN-IWU (bridge-type LAN IWU)

Copyright International Organization for Standardization
Provided by IHS under license with ISO
No reproduction or networking permitted without license from IHS
Not for Resale

© ISO/IEC

ICS 33.040.35

Price based on 4 pages

Copyright International Organization for Standardization
Provided by IHS under license with ISO
No reproduction or networking permitted without license from IHS

Not for Resale