4851903 0641521 677

INTERNATIONAL STANDARD ISO/IEC 11579-1:1994
TECHNICAL CORRIGENDUM 1

Published 1996-05-15

INTERNATIONAL ORGANIZATION FOR STANDARDIZATION • МЕЖДУНАРОДНАЯ ОРГАНИЗАЦИЯ ПО СТАНДАРТИЗАЦИИ • ORGANISATION INTERNATIONALE DE NORMALISATION
INTERNATIONAL ELECTROTECHNICAL COMMISSION • МЕЖДУНАРОДНАЯ ЭЛЕКТРОТЕХНИЧЕСКАЯ КОМИССИЯ • COMMISSION ÉLECTROTECHNIQUE INTERNATIONALE

Information technology — Telecommunications and information exchange between systems — Private integrated services network —

Part 1:
Reference configuration for PISN Exchanges (PINX)

TECHNICAL CORRIGENDUM 1

Technologies de l'information — Télécommunications et échange d'information entre systèmes — Réseau privé avec intégration de services —

Partie 1: Configuration de référence pour échanges de PISN (PINX)

RECTIFICATIF TECHNIQUE 1

Technical corrigendum 1 to International Standard ISO/IEC 11579-1:1994 was prepared by Joint Technical Committee ISO/IEC JTC 1, *Information technology,* Subcommittee SC 6, *Telecommunications and information exchange between systems.*

Page 2

Subclause 4.7

Replace by the following:

4.7 intervening network: The generic term for any real type of network, or for any concatenation of real networks, which is employed for the provision of inter-PINX connections.

ICS 35.120 **Ref. No. ISO/IEC 11579-1:1994/Cor.1:1996(E)**

Descriptors: data processing, information interchange, telecommunications, telecommunication network, network interconnection, private network, data transmission, data processing system configuration.

© ISO/IEC 1996

Printed in Switzerland

Copyright International Organization for Standardization
Provided by IHS under license with ISO
No reproduction or networking permitted without license from IHS Not for Resale

11579 PT*1 94 ■ 4851903 0567602 T97 ■

INTERNATIONAL STANDARD

ISO/IEC 11579-1

First edition
1994-06-01

Information technology — Telecommunications and information exchange between systems — Private integrated services network —

Part 1:
Reference configuration for PISN Exchanges (PINX)

Technologies de l'information — Télécommunications et échange d'information entre systèmes — Réseau privé avec intégration de services —

Partie 1: Configuration de référence pour échanges de PISN (PINX)

Reference number
ISO/IEC 11579-1:1994(E)

Copyright International Organization for Standardization
Provided by IHS under license with ISO
No reproduction or networking permitted without license from IHS
Not for Resale

Contents

Foreword iiii

Introduction iv

1 Scope 1

2 Normative references 1

3 Symbols and abbreviations 1

4 Definitions 1

5 PINX reference configuration 2

5.1 Terminal equipment (TE) 2

5.2 Private termination system functional grouping (PTS) 2

5.3 Switching functional grouping (SW) 2

5.4 Mapping functional grouping (MP) 2

5.5 Public ISDN access termination functional grouping (PIAT) 2

5.6 Inter-PINX connection control functional grouping (ICC) 2

5.7 Call control functional grouping (CC) 2

5.8 Scenario management 2

6 Reference points (RP) 3

6.1 C reference point 3

6.2 Q reference point 3

6.3 S reference point 3

6.4 T reference point 3

7 Use of the PINX reference configuration 3

7.1 Multiple instances of Q reference point 3

7.2 Multiple instances of C reference point 4

7.3 Multiple IVN interfaces 4

7.4 Shared interface use 4

Annex A :Termination of signalling information flows 6

Annex B : Public ISDN / PISN interworking scenarios 7

Annex C : Example of a PISN employing multiple instances of Q reference points 8

Annex D : Example for the application of the PINX reference configuration to a PISN 9

© ISO/IEC 1994

All rights reserved. Unless otherwise specified, no part of this publication may be reproduced or utilized in any form or by any means, electronic or mechanical, including photocopying and microfilm, without permission in writing from the publisher.

ISO/IEC Copyright Office • Case postale 56 • CH-1211 Genève 20 • Switzerland

Printed in Switzerland

Copyright International Organization for Standardization
Provided by IHS under license with ISO
No reproduction or networking permitted without license from IHS Not for Resale

Foreword

ISO (the International Organization for Standardization) and IEC (the International Electrotechnical Commission) form the specialized system for worldwide standardization. National bodies that are members of ISO or IEC participate in the development of International Standards through technical committees established by the respective organization to deal with particular fields of technical activity. ISO and IEC technical committees collaborate in fields of mutual interest. Other international organizations, governmental and non-governmental, in liaison with ISO and IEC, also take part in the work.

In the field of information technology, ISO and IEC have established a joint technical committee, ISO/IEC JTC 1. Draft International Standards adopted by the joint technical committee are circulated to national bodies for voting. Publication as an International Standard requires approval by at least 75 % of the national bodies casting a vote.

International Standard ISO/IEC 11579-1 was prepared by Joint Technical Committee ISO/IEC JTC 1, *Information technology*, Subcommittee SC 6, *Telecommunications and information exchange between systems.*

ISO/IEC 11579 consists of the following parts, under the general title *Information technology — Telecommunications and information exchange between systems — Private integrated services network*:

— *Part 1: Reference configuration for PISN Exchanges (PINX)*

— *Part 2: Reference configuration for High-Speed PISN Exchanges (HS-PINX)*

Annexes A, B, C and D of this part of ISO/IEC 11579 are for information only.

Copyright International Organization for Standardization
Provided by IHS under license with ISO
No reproduction or networking permitted without license from IHS

Not for Resale

Introduction

The purpose of a reference configuration (RC) is to define reference points by means of identifying functional groupings which interwork at the reference points.

Suitable definitions of functional groupings allow the proper definition of the behaviour and/or performance of such groupings, merely by referring to the corresponding reference points.

This applies to aspects such as:

- delimitation of areas of responsibility, e.g. for management, operation etc.;
- partitioning and apportioning of performance values;
- numbering;
- termination of signalling protocols;
- etc.

ISO/IEC 11579 will consist of several parts. This part of ISO/IEC 11579 defines the RC for a 64 kbit/s-based Private Integrated Services Network (PISN) exchange (PINX), including a description for modelling complete PISNs consisting of more than one PINX. It also forms a component for a RC for high-speed-PISNs (HS-PISN), i.e. PISNs which may be based on technologies such as broad-band ISDN, LAN, etc. The particularities for HS-PISN will be specified in other parts of this standard.

In addition to the user-to-ISDN reference configuration specified in CCITT Rec. I.411 [1] which allows the exchanges of a private integrated services network (PISN) to interwork with a public ISDN in a Concatenation Scenario, ISO/IEC 11579 specifies a reference configuration which allows to specify the functions which apply to the control of connections and calls between any two exchanges of a given PISN

The concept of this standard is based on the assumption that such inter-PISN-exchange connections are routed through an intervening network, which can be of any nature from, in the trivial case, a mere physical medium like a piece of wire, up to a switching network, such as the public ISDN, provided it offers the required capabilities for carrying user and control information between the PISN exchanges. In the case that the IVN is represented by a public ISDN, the PISN and the public ISDN interwork in an Overlay Scenario.

For further information on the Concatenation and the Overlay Scenarios see annex B.

In general, inter-PISN-exchange calls require that any two interconnected PISN exchanges

- can be provided with bearer capabilities between each other, which support and satisfy the requirements as requested by the users of the PISN; and

- can interchange control information, which allows mutual control of network layer connections, including the control of supplementary services, if applicable; and

- can interchange management information, enabling management actions with regard to, e.g., the use and supervision of the user information channels.

Reference point Q has been defined as a conceptual point (e.g. not as a real interface) where the exchange of connection control information between PISN exchanges shall be specified. Reference point C has been defined as an interface point where the access parameters and procedures and, if applicable, the control information between the PISN exchanges and the intervening network shall be specified.

Annex A shows the various information flows terminating at the reference points specified in this part of ISO/IEC 11579.

Copyright International Organization for Standardization
Provided by IHS under license with ISO
No reproduction or networking permitted without license from IHS
Not for Resale

11579 PT*1 94 ■ 4851903 0567606 632 ■

Information technology — Telecommunications and information exchange between systems — Private integrated services network —

Part 1 — Reference configuration for PISN Exchanges (PINX)

1 Scope

This part of ISO/IEC 11579 specifies a reference configuration (RC) for private integrated services network exchanges (PINX) for their interconnection to form private integrated services networks (PISN). The configuration is not intended to require any specific implementation of a PINX, but only to provide guidance for the specification of PINX capabilities.

This RC is sufficient to support ISDN-like applications. It can be extended to also support non-ISDN-like applications.

This RC describes a conceptual PINX. By combining multiple PINXs to a private integrated services network the RC becomes applicable to a PISN.

2 Normative references

The following standards contain provisions which, through reference in this text, constitute provisions of this part of ISO/IEC 11579. At the time of publication, the editions indicated are valid. All standards are subject to revision, and parties to agreements based on this part of ISO/IEC 11579 are encouraged to investigate the possibility of applying the most recent editions of the standards listed below. Members of IEC and ISO maintain registers of currently valid International Standards.

[1] CCITT Recommendation I.411 (1988), ISDN-User-Network Interfaces - Reference Configurations

[2] CCITT Recommendation I.570 (1992), Public/Private ISDN Interworking

3 Symbols and abbreviations

CC	Call Control functional grouping
ICC	Inter-PINX Connection Control functional grouping
IPC	Inter-PINX Connection
IVN	Intervening Network
ISCTX	Integrated Services Centrex
ISPBX	Integrated Services Private Branch Exchange
MP	Mapping functional grouping
PIAT	Public ISDN Access functional grouping
PINX	Private integrated services network Exchange
PISN	Private integrated services network
PTS	Private Termination System functional grouping
RC	Reference configuration
RP	Reference Point
SW	Switching functional grouping
TE	Terminal Equipment functional grouping

4 Definitions

For the purposes of this part of ISO/IEC 11579, the following definitions apply:

4.1 reference configuration : A conceptual configuration showing functional arrangements within a public ISDN, a PISN or between a public ISDN and a PISN. Reference configurations are based on association rules of functional groupings and reference points. A functional arrangement may, but need not, be equivalent to a physical arrangements of units of equipment.

4.2 functional grouping : A set of functions needed in functional arrangements. A functional grouping may, but need not, be equivalent to a unit of equipment. Depending on the actual implementation, some of the functions of a functional grouping may or may not be present.

4.3 reference point (RP) : A conceptual point at the junction of two functional groupings. In a specific functional arrangement, a reference point may, but need not, correspond to a physical interface between units of equipment.

4.4 private integrated services network (PISN) : A private network providing services to a specific set of users (different from a public network which provides services to the general public).

Copyright International Organization for Standardization
Provided by IHS under license with ISO
No reproduction or networking permitted without license from IHS
Not for Resale

NOTES

1 This definition does not include legal and regulatory aspects and does not indicate any aspects of ownership.

2 The term "PISN " covers more than a (private) ISDN.

4.5 private integrated services network exchange (PINX) : A PISN nodal entity which provides automatic connection handling functions used for the provision of telecommunication services . A nodal entity consists of one or more nodes.

NOTE - If applicable, a PINX provides:

- telecommunication services within its own area, and/or
- telecommunication services from the public ISDN, and/or
- telecommunication services from other public networks, and/or
- within the context of a private integrated services network, telecommunication services from other PINXs

to users of the same and/or other PINXs.

A PINX can be presented by an ISPBX, ISCTX (CENTREX), or other equipment performing the functions outlined above (e.g. LAN interworking unit).

4.6 inter-PINX connection (IPC) : A connection between two PINXs; the inter-PINX connection is provided by an intervening network. It can be established on-demand or permanently, depending on the nature of the intervening network and, if applicable, customer's requirements.

4.7 intervening network (IVN) : The generic term for any real type of network which is employed for the provision of inter-PINX connections.

5 PINX reference configuration

The reference configuration is depicted within the dotted rectangle in figure 1 and contains the following functional groupings:

NOTE - The definition of specific information flows across RPs is outside the scope of this part of ISO/IEC 11579.

5.1 Terminal equipment (TE)

The TE functional grouping shall conform to the TE functional grouping as defined in CCITT Rec. I.411 [1]. The TE can be either a TE1 functional grouping or a combination of a TE2 and a TA functional grouping.

5.2 Private termination system functional grouping (PTS)

This functional grouping provides transmission functions and, if applicable, Layer 1 signalling functions between the TE and the SW, as well as adaptation functions to the physical, electrical and procedural conditions of the interface employed at the point of attachment of a TE to the PINX, to those employed at the SW.

5.3 Switching functional grouping (SW)

This functional grouping provides the switching functions for user and signalling information. User information is switched between PTS and MP (see 5.4) or PIAT (see 5.5), depending on the selection of the switching path. Signalling information is switched between PTS and CC (see 5.7), and CC and MP and/or PIAT, depending on the selection of the switching path. The selection of the switching path depends on the parameters of the service request.

5.4 Mapping functional grouping (MP)

This functional grouping shall provide the functions which are necessary to adapt to physical, electrical and procedural conditions of the interface employed at the interface between the PINX and the IVN to those employed at the SW. MP also provides the multiplexing functions which are required to separate or merge the information flows to or from SW from or to the user plane of the IVN, and to or from IAC from or to the control plane of the IVN, respectively.

5.5 Public ISDN access termination functional grouping (PIAT)

This functional grouping provides the functions which are necessary to adapt the physical, electrical and procedural conditions employed at the interface between the PINX and the public ISDN to those employed at SW.

5.6 Inter-PINX connection control functional grouping (ICC)

This functional grouping provides the signalling and control handling functions which are necessary to control the inter-PINX connection (IPC) through the intervening network.

5.7 Call control functional grouping (CC)

This functional grouping provides the functions which are necessary to control the call and the connection through a public ISDN and/or a PISN, and/or between the TEs attached to SW via PTS.

5.8 Scenario management

This functional grouping provides the information on the type of intervening network to MP as required for the application of the appropriate control functions to the intervening network, via SW. Management functions and information flows between interconnected PINXs are handled by this functional grouping.

Copyright International Organization for Standardization
Provided by IHS under license with ISO
No reproduction or networking permitted without license from IHS
Not for Resale

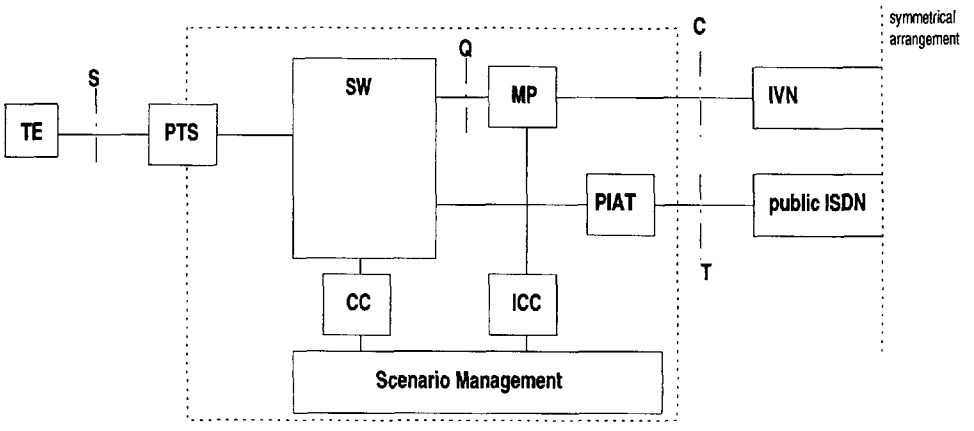

NOTE - The allocation of PTS to the PINX, to the PINX's network, or to the TE depends on the physical implementation and is not defined by this standard.

Figure 1 - PINX reference configuration

6 Reference points (RP)

Letters have been allocated to those RPs at which interface and/or protocol definitions can be standardized.

6.1 C reference point

The C RP defines the boundary between MP and intervening network. The physical, electrical and procedural interface characteristics shall be specified at this RP, as well as the signalling information flows which are necessary for the control of the inter-PINX connections provided by the IVN.

In the case where the IVN is a public ISDN, the interface specifications of the T RP shall apply at the C RP.

6.2 Q reference point

The Q RP defines the boundary between SW and MP. The inter-PINX call control functions and signalling information flows shall be specified at this RP.

6.3 S reference point

The S RP defines the boundary between the TE and the PINX functional groupings. It forms the access point of the TE to the PINX capabilities (see [1]).

6.4 T reference point

The T RP defines the boundary between the functional groupings of the PINX and those of the public ISDN. The physical, electrical and procedural interface characteristics shall be specified at this RP, as well as the interworking functions and control information between the public ISDN and the PISN.

7 Use of the PINX reference configuration

The PINX reference configuration is an abstract way of defining reference points. This clause gives some refined tools which allow the reference configuration to be applied to real implementations.

An example of the combined use of these tools is given in annex C.

An example showing the applicability of the PINX reference points to a PISN is given in annex D.

7.1 Multiple instances of Q reference point

If a PINX has multiple groups of inter-PINX connections, each leading to a different peer PINX, multiple instances of Q reference points will occur. These may be distinguished by appropriate indexes, e.g. Q_1 ... Q_x. This is shown in figure 2.

NOTE - There is no relationship between the number of instances of Q reference points and the number of interfaces at the C reference point; i.e. multiple instances of Q reference points may be mapped onto a single or onto multiple physical interfaces at the C reference point.

Copyright International Organization for Standardization
Provided by IHS under license with ISO
No reproduction or networking permitted without license from IHS
Not for Resale

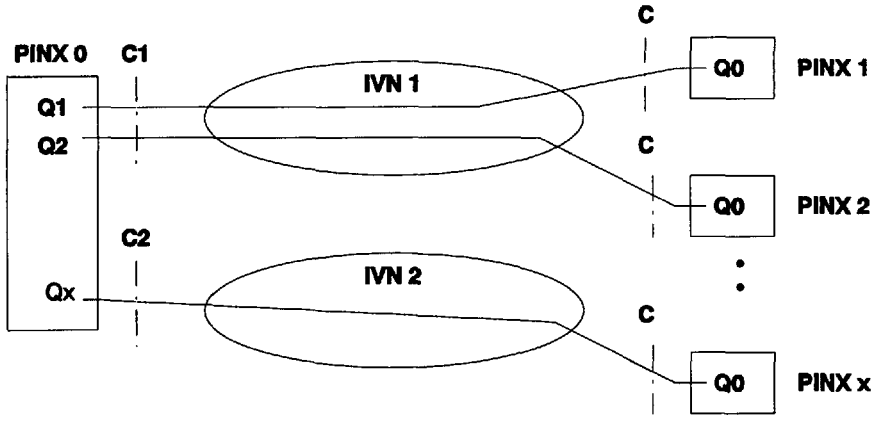

Figure 2 - Multiple instances of Q reference points

7.2 Multiple instances of C reference point

If multiple types of IVN are employed, multiple instances of C reference point will occur, each corresponding to a particular type of IVN. The individual instances of C reference points may be distinguished by appropriate indexes, e.g. C_1 ... C_n. This is shown in figure 3.

NOTE - If in addition multiple Q reference points are utilized in a PINX (see 7.1), the annotation for the C reference points should reflect this by, e.g., C_{x1} ... C_{xn}, C_{y1} ... C_{ym}, whereby x and y designate the particular instance of the Q reference point.

If Q reference points use the same type of IVN for their inter-PINX connections, the values of x and y will be the same.

7.3 Multiple IVN interfaces

If a particular type of IVN connects to a PINX via multiple interfaces, no particular distinction of these interfaces by different reference points shall be applied.

NOTE - This does, however, not preclude that the individual interfaces are distinguished by other means.

7.4 Shared interface use

When a public ISDN is employed as an IVN, C and T reference points can coexist on the same interface(s). This is shown in figure 4.

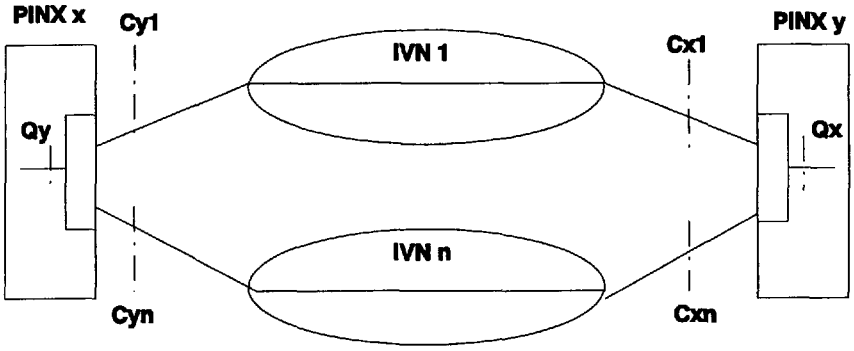

Figure 3 - Multiple instances of C reference point

Copyright International Organization for Standardization
Provided by IHS under license with ISO
No reproduction or networking permitted without license from IHS
Not for Resale

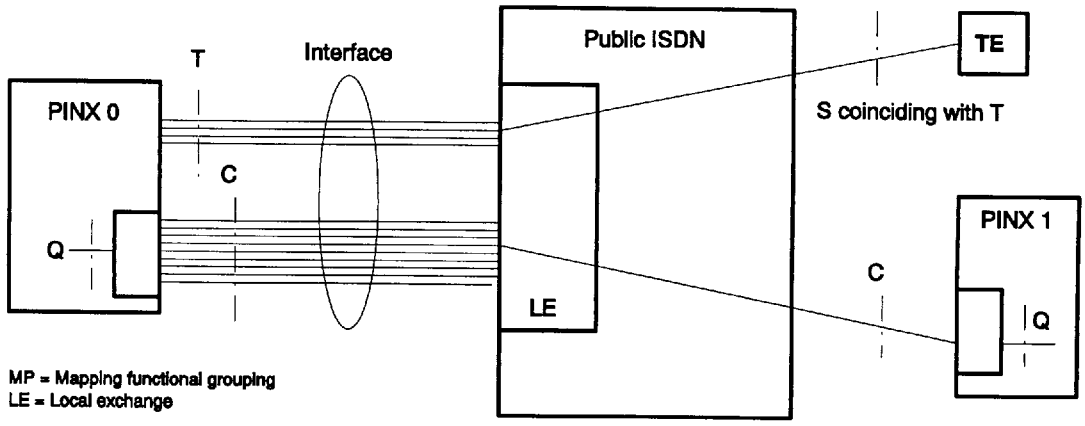

Figure 4 - Shared use of an interface to a public ISDN

Copyright International Organization for Standardization
Provided by IHS under license with ISO
No reproduction or networking permitted without license from IHS
Not for Resale

© ISO/IEC

Annex A

(informative)

Termination of signalling information flows

Figure A.1 shows the termination of signalling flows necessary for PINX interworking.

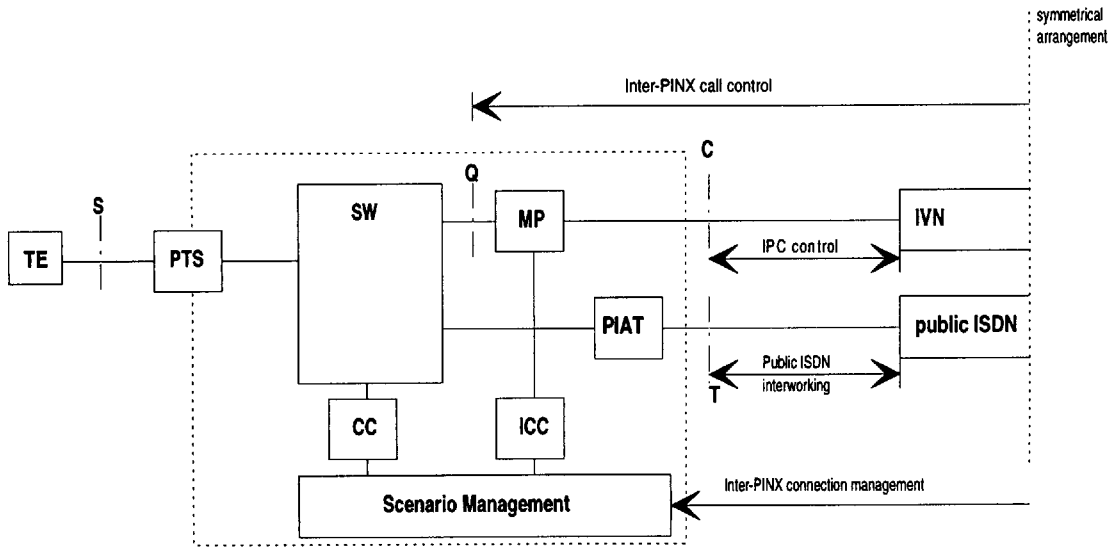

NOTE - The allocation of PTS to the PINX, to the PINX's network, or to the TE depends on the physical implementation and is not defined by this standard.

Figure A.1 - Application of the PINX reference configuration to protocol termination

Copyright International Organization for Standardization
Provided by IHS under license with ISO
No reproduction or networking permitted without license from IHS
Not for Resale

Annex B

(informative)

Public ISDN / PISN interworking scenarios

B.1 Overlay scenario

This scenario is characterized by the fact that the PISN user will see the services provided by the PISN irrespectively of how the link between the two PISN exchanges is established, i.e. whether it is routed through the public ISDN or not (links A and B in figure B.1). The public ISDN entities provide transparency to the services of the PISN, as indicated by the examples of the local exchanges (LE).

B.2 Concatenation scenario

This scenario is characterized by the fact that the PISN user will see the smallest common denominator of services as provided by both networks. The public ISDN entities provide interworking with the services of the PISN, as indicated by the examples of the local exchanges (LE), see figure B.2.

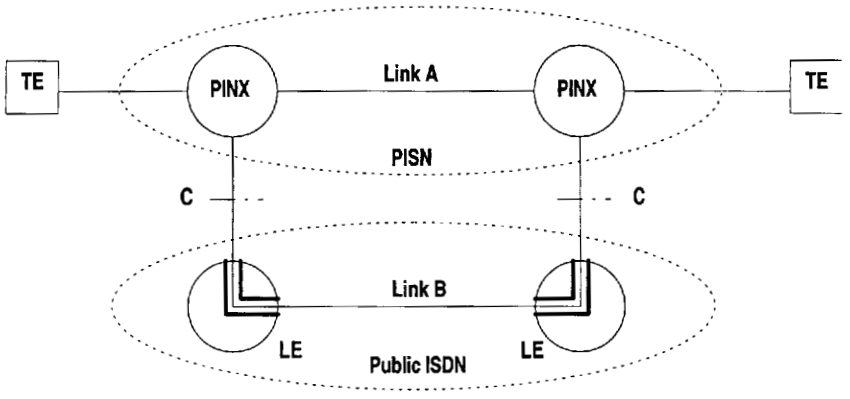

Figure B.1 - Overlay scenario

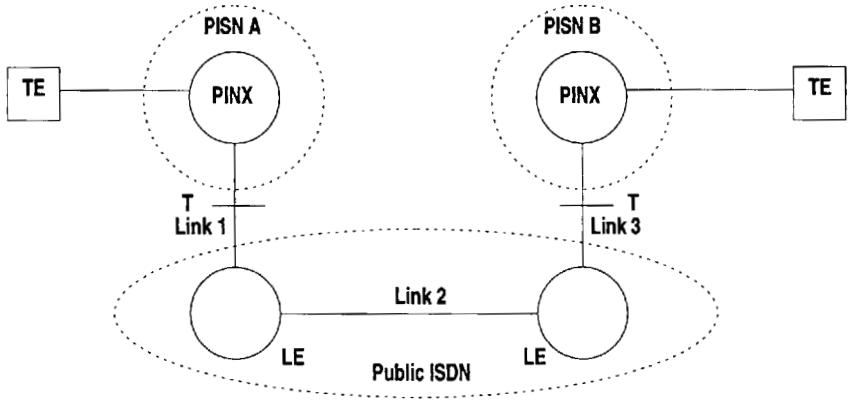

Figure B.2 - Concatenation scenario

For further information see CCITT Rec. I.570.

Copyright International Organization for Standardization
Provided by IHS under license with ISO
No reproduction or networking permitted without license from IHS
Not for Resale

Annex C

(informative)

Example of a PISN employing multiple instances of Q reference points

The example shown in figure C.1 shows four PINXs. The inter-PINX connections are provided by a public ISDN.

PINX 0 interworks with PINX 3 (Q_3 reference point), PINX 3 with PINX 0 and PINX 2 (Q_0 and Q_2 reference points), PINX 2 with PINX 3 and PINX 1 (Q_3 and Q_1 respectively), and PINX 1 with PINX 2 (Q_2).

PINXs 1 and 3 employ shared interface use, whereas PINX 0 has a separate interface for the support of its T reference point. In this particular example, PINX 2 has been configured to not have a T reference point of its own, i.e. all public ISDN calls will need to be established via PINXs 1 or 3.

PINXs 2 and 3 can act as transit PINXs for intra-PISN calls, and all PINXs can act as transit PINXs for calls into/from the public ISDN.

Since the ISDN is used as the only type of IVN for any of the four PINXs, only one instance of C reference point is involved at each PINX.

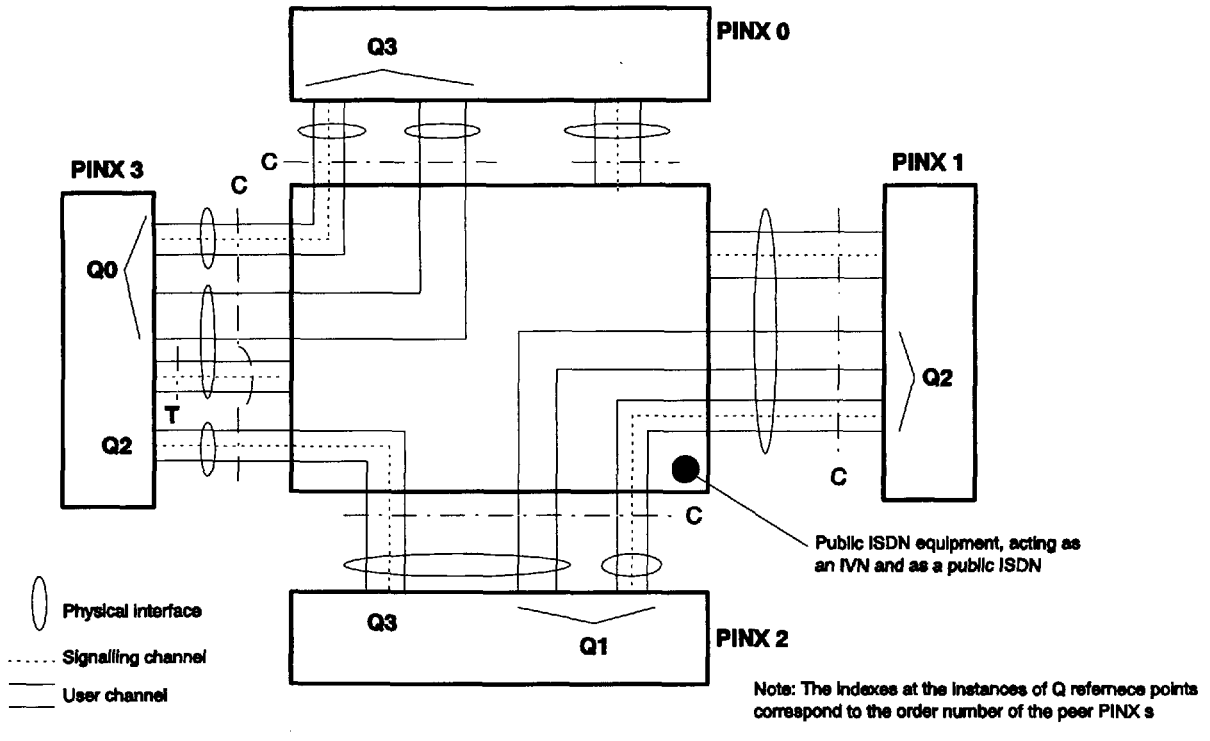

Figure C.1 - Example for the application of the PINX reference configuration to a PISN with multiple instances of Q reference point and with shared interface use

Copyright International Organization for Standardization
Provided by IHS under license with ISO
No reproduction or networking permitted without license from IHS
Not for Resale

Annex D

(informative)

Example for the application of the PINX reference configuration to a PISN

Figure D.1 shows an example of how PINXs can be combined to form a PISN and how the reference points defined in the PINX reference configuration apply to such a complete PISN:

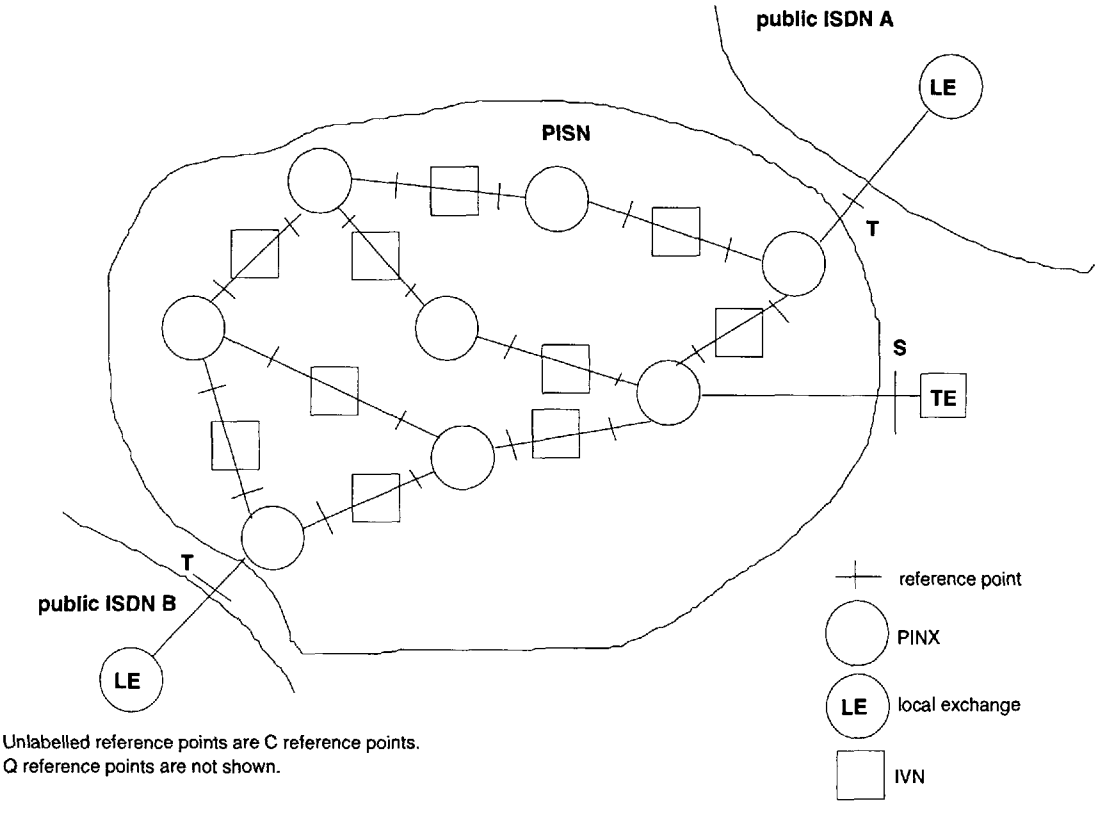

Figure D.1 - Application of the PINX reference configuration to a PISN

The PINXs form an arbitrary example of PISN topology. Each of the inter-PINX connections is provided by an IVN. Although Q reference points are not shown, the figure implies their multiple use.

For simplicity, figure D.1 does not show multiple IVNs between the various adjacent PINXs, and the figure thus does also not show the use of multiple instances of C reference points.

The figure shows that any type of IVN, including public ISDNs, can be employed for the provision of inter-PINX connections (overlay scenario). External calls to/from public ISDNs A and B cross the PISN boundary at T reference points (concatenation scenario). PINXs which do not provide interconnection with the public ISDN do not have a T reference point.

For simplicity, only one terminal has been shown. Pure transit PINXs do not have an S reference point (not explicitly shown).

Copyright International Organization for Standardization
Provided by IHS under license with ISO
No reproduction or networking permitted without license from IHS
Not for Resale

© ISO/IEC

ICS 35.120.00

Descriptors: data processing, information interchange, telecommunications, network interconnection, private network, data transmission, data processing system configuration.

Price based on 9 pages

Copyright International Organization for Standardization
Provided by IHS under license with ISO
No reproduction or networking permitted without license from IHS

Not for Resale