11559 93 ■ 4851903 0543466 88T ■

INTERNATIONAL STANDARD

ISO/IEC 11559

First edition
1993-08-15

Information technology — Data interchange on 12,7 mm wide 18-track magnetic tape cartridges — Extended format

Technologies de l'information — Échange de données sur cartouche de bande magnétique de 12,7 mm *de large à 18 pistes — Format étendu*

Reference number
ISO/IEC 11559:1993(E)

Copyright International Organization for Standardization
Provided by IHS under license with ISO
No reproduction or networking permitted without license from IHS
Not for Resale

Contents **Page**

Section 1 - General 1

1 Scope 1

2 Conformance 1

2.1 Magnetic tape cartridge 1
2.2 Generating system 1
2.3 Receiving system 1

3 Normative references 2

4 Definitions 2

4.1 algorithm 2
4.2 Average Signal Amplitude 2
4.3 back surface 2
4.4 Beginning of Tape (BOT) 2
4.5 byte 2
4.6 cartridge 2
4.7 Cyclic Redundancy Check Character 2
4.8 Data Block 2
4.9 Data Records 2

4.9.1 Processed Data Record (PDR) 2
4.9.2 Host Data Record 2
4.9.3 Logical Data Record (LDR) 3
4.9.4 User Data Record (UDR) 3

4.10 Error Correcting Code 3
4.11 flux transition position 3
4.12 flux transition spacing 3
4.13 magnetic tape 3
4.14 Master Standard Reference Tape 3
4.15 Packet 3
4.16 Packet Identifier 3
4.17 Packet Trailer 3

© ISO/IEC 1993
All rights reserved. No part of this publication may be reproduced or utilized in any form or by any means, electronic or mechanical, including photocopying and microfilm, without permission in writing from the publisher.

ISO/IEC Copyright Office • Case Postale 56 • CH-1211 Genève 20 • Switzerland

Printed in Switzerland

Copyright International Organization for Standardization
Provided by IHS under license with ISO
No reproduction or networking permitted without license from IHS Not for Resale

4.18 pad byte 3
4.19 physical recording density 3
4.20 Postamble 3
4.21 Preamble 3
4.22 Processed Data 3
4.23 processing 3
4.24 Reference Field 3
4.25 Secondary Standard Reference Tape 3
4.26 Standard Reference Amplitude (SRA) 4
4.27 Standard Reference Current 4
4.28 Test Recording Current 4
4.29 track 4
4.30 Typical Field 4
4.31 transformation 4
5 Conventions and notations 4
5.1 Representation of numbers 4
5.2 Names 4
5.3 Acronyms 4
6 Environment and safety 5
6.1 Cartridge/Tape testing environment 5
6.2 Cartridge operating environment 5
6.3 Cartridge storage environment 5
6.4 Safety requirements 5
6.4.1 Safeness 5
6.4.2 Flammability 5
6.5 Transportation 5
Section 2 - Characteristics of the tape 6
7 Characteristics of the tape 6
7.1 Material 6
7.2 Tape length 6
7.3 Tape width 6
7.4 Tape discontinuity 6
7.5 Total thickness of tape 6
7.6 Base material thickness 6
7.7 Longitudinal curvature 6
7.8 Out-of-plane distortions 6
7.9 Cupping 6
7.10 Dynamic frictional characteristics 7
7.10.1 Frictional drag between the recording surface and the tape back surface 7
7.10.2 Frictional drag between the tape recording surface and ferrite after environmental cycling 7
7.11 Coating adhesion 7
7.12 Flexural rigidity 8
7.13 Electrical resistance of coated surfaces 8
7.14 Tape durability 9
7.15 Inhibitor tape 9

Copyright International Organization for Standardization
Provided by IHS under license with ISO
No reproduction or networking permitted without license from IHS
Not for Resale

7.16 Tape abrasivity 9
7.17 Pre-recording condition 10
7.18 Magnetic recording characteristics 10
7.18.1 Typical Field 10
7.18.2 Signal amplitude 10
7.18.3 Resolution 10
7.18.4 Overwrite 10
7.18.5 Narrow-band signal-to-noise ratio (NB-SNR) 11
7.19 Tape quality 11
7.19.1 Missing pulses 12
7.19.2 Missing pulse zones 12
7.19.3 Coincident missing pulse zones 12
Section 3 - Cartridge 12
8 Dimensional and mechanical characteristics of the cartridge 12
8.1 Overall dimensions 13
8.2 Write-inhibit mechanism 13
8.3 Label area of the rear side 14
8.4 Label area of the top side 14
8.5 Case opening 14
8.6 Locating notches 15
8.7 Locating areas 15
8.8 Inside configuration of the case around the case opening 15
8.9 Other external dimensions of the case 15
8.10 Central window 16
8.11 Stacking ribs 16
8.12 Flexibility of the case 16
8.12.1 Requirements 16
8.12.2 Procedure 16
8.13 Tape reel 17
8.13.1 Locking mechanism 17
8.13.2 Axis of rotation of the reel 17
8.13.3 Metallic insert 17
8.13.4 Toothed rim 17
8.13.5 Hub of the reel 17
8.13.6 Relative positions 18
8.13.7 Characteristics of the toothed rim 19
8.14 Leader block 19
8.15 Attachment of the tape to the header block 20
8.16 Latching mechanism 20
8.17 Tape wind 20
8.18 Wind tension 20
8.19 Circumference of the tape reel 21
8.20 Moment of inertia 21
Section 4 - Recording method and formats 28
9 Method of recording 28

Copyright International Organization for Standardization
Provided by IHS under license with ISO
No reproduction or networking permitted without license from IHS Not for Resale

9.1 Physical recording density 28
9.2 Bit cell length 28
9.3 Average bit cell length 28
9.4 Long-term average bit cell length 28
9.5 Short-term average bit cell length (STA) 28
9.6 Rate of change 28
9.7 Bit shift 28
9.8 Total character skew 29
9.9 Read signal amplitude 29
9.10 Coincident missing pulse zones 29

10 Track format 29

10.1 Number of tracks 29
10.2 Reference edge 29
10.3 Track positions 29
10.4 Track width 29
10.5 Azimuth 30

11 Packet format 30

11.1 Packet elements 30
11.2 Packet ID 30
11.3 UDR 31
11.4 Packet Trailer 31

11.4.1 Packet Trailer when data has been processed 31
11.4.2 Packet Trailer when data has not been processed 31

12 Data Block format 32

12.1 Data Part 32

12.1.1 Packet Bytes 32
12.1.2 Count Field Bytes 32
12.1.3 Block-ID Bytes 32

12.2 Allocation of Data Bytes to frames 33

12.2.1 Prefix Frames 34
12.2.2 Data Frames 34
12.2.3 Residual Frame 1 35
12.2.4 Residual Frame 2 35
12.2.5 Suffix Frames 37

12.3 Error Correcting Code (ECC) 37

12.3.1 Diagonal Redundancy Check (DRC) 38
12.3.2 Vertical Redundancy Check (VRC) 38
12.3.3 ECC Format 38
12.3.4 Summary of ECC2) 39

12.4 Recording of 8-bit bytes on the tape 40
12.5 Recorded Data Block 40

12.5.1 Preamble 40
12.5.2 Beginning of Data Mark (BDM) 41

Copyright International Organization for Standardization
Provided by IHS under license with ISO
No reproduction or networking permitted without license from IHS
Not for Resale

12.5.3 Resync Control Frame 41
12.5.4 End of Data Mark (EDM) 41
12.5.5 Postamble 41

12.6 Data Density 41

13 Tape format 41

13.1 Density Identification Burst 42
13.2 ID Separator Burst 42
13.3 Interblock Gaps 42
13.4 Erase Gaps 43

13.4.1 Normal Erase Gaps 43
13.4.2 Elongated Erase Gaps 43

13.5 Tape Marks 43
13.6 Relationship between Interblock Gaps, Erase Gaps and Tape Marks 44

13.6.1 Interblock Gap followed by a Tape Mark 44
13.6.2 Tape Mark followed by an Interblock Gap 44
13.6.3 Interblock Gap followed by an Erase Gap 44
13.6.4 Erase Gap followed by an Interblock Gap 44
13.6.5 Summary of the relationship between Interblock Gaps, Erase Gaps and Tape Marks 45

13.7 First and last recording on the tape 45
13.8 Summary of the tape format 46
13.9 Transform Change Records (TCRs) 47

Annexes

A - Recommendations for transportation 49

B - Inhibitor tape 50

C - Tape abrasivity measurement procedure 51

D - Recommendations on tape durability 53

E - Pre-recording condition 54

F - Representation of 8-bit bytes by 9-bit patterns 55

G - Measurement of bit shift 58

H - Summary of data flow 60

J - Implementation of a CRC 61

K - Calculation of a Physical Position Indicator 62

Copyright International Organization for Standardization
Provided by IHS under license with ISO
No reproduction or networking permitted without license from IHS
Not for Resale

Foreword

ISO (the International Organization for Standardization) and IEC (the International Electrotechnical Commission) form the specialized system for worldwide standardization. National bodies that are members of ISO or IEC participate in the development of International Standards through technical committees established by the respective organization to deal with particular fields of technical activity. ISO and IEC technical committees collaborate in fields of mutual interest. Other international organizations, governmental and non-governmental, in liaison with ISO and IEC, also take part in the work.

In the field of information technology, ISO and IEC have established a joint technical committee, ISO/IEC JTC 1. Draft International Standards adopted by the joint technical committee are circulated to national bodies for voting. Publication as an International Standard requires approval by at least 75 % of the national bodies casting a vote.

International Standard ISO/IEC 11559 was prepared by European Computer Manufacturers Associations (as ECMA-152) and was adopted, under a special "fast-track procedure", by Joint Technical Committee ISO/IEC JTC 1, *Information technology*, in parallel with its approval by national bodies of ISO and IEC.

Annexes C, E, F, G and K form an integral part of this International Standard. Annexes A, B, D, H and J are for information only.

Copyright International Organization for Standardization
Provided by IHS under license with ISO
No reproduction or networking permitted without license from IHS
Not for Resale

Introduction

ISO/IEC 11559 incorporates all the specifications of ISO 9661, together with extensions and modifications which specify the additional features of an extended format that also allows higher capacities to be achieved. The specifications of the tape, cartridge, recorded signal, recording method and most of the recorded format are identical with those in ISO 9661.

It is not intended that this International Standard replaces ISO 9661. Existing drives and cartridges which conform to ISO 9661 will continue to do so and will not conform to all requirements of this International Standard . Drives conforming to this International Standard will be able to write on, and read from, cartridges conforming to ISO 9661.

Copyright International Organization for Standardization
Provided by IHS under license with ISO
No reproduction or networking permitted without license from IHS
Not for Resale

Information technology — Data interchange on 12,7 mm wide 18-track magnetic tape cartridges — Extended format

Section 1 - General

1 Scope

This International Standard specifies the physical and magnetic characteristics of a 12,7 mm wide, 18-track magnetic tape cartridge, to enable interchangeability of such cartridges. It also specifies the quality of the recorded signals, the format and the recording method, thus allowing, together with ISO 1001, full data interchange by means of such magnetic tape cartridges.

The cartridge and recording method are identical with those described in ISO 9661. This International Standard specifies extensions to the transformation of data before it is formatted as in ISO 9661.

These extensions

- specify a method for increasing the utilization of the tape by combining smaller blocks of data into extended blocks;
- specify a method for identifying whether the recorded data has been processed and, if it has been processed, the algorithm used for processing;
- specify a method for including recorded data blocks conforming to this International Standard and recorded data blocks conforming to ISO 9661 on the same tape.

The permissible routes for the flow of data are shown in annex H.

2 Conformance

2.1 Magnetic tape cartridge

A magnetic tape cartridge shall be in conformance with this International Standard if

- the cartridge meets all the requirements of clauses 4 and 6 to 8;
- the recording on the tape meets the requirements of clauses 9 to 13;
- for each recorded packet the algorithm used for processing the data therein, if processed data has been recorded, has (have) been registered and the registered identification is included in Byte 13 of the Packet ID Block of this packet (see 11.2).
- Note 1 - If the algorithm has not been registered Byte 13 shall be set to (FF).

2.2 Generating system

A system generating a magnetic tape cartridge for interchange shall be entitled to claim conformance with this International Standard if all the recordings that it makes on a tape meet the mandatory requirements of this International Standard. A claim of conformance shall state whether or not one, or more, registered algorithms are implemented and, if so, the registered number(s) of all implemented algorithm(s).

2.3 Receiving system

A system receiving a magnetic tape cartridge for interchange shall be entitled to claim conformance with this International Standard if it is able to handle any recording made on the tape according to this International Standard. In particular it shall

- be able to recognize the occurrence of extended blocks and to identify and retrieve data from individual packets within the extended blocks;
- be able to recognize that the data has been processed, to identify the algorithm(s) used, and to indicate to the host if it cannot restore the data to its original form;

Copyright International Organization for Standardization
Provided by IHS under license with ISO
No reproduction or networking permitted without license from IHS
Not for Resale

– be capable of restoring to its original form data which has been processed according to zero or more registered algorithms.

A claim of conformance shall state whether or not one, or more, registered algorithm(s) is (are) implemented and, if so, the registered number(s) of all implemented algorithms.

3 Normative references

The following standards contain provisions which, through reference in this text, constitute provisions of this International Standard. At the time of publication, the editions indicated were valid. All standards are subject to revision, and parties to agreements based on this International Standard are encouraged to investigate the possibility of applying the most recent edition of the standards listed below. Members of IEC and ISO maintain registers of currently valid International Standards.

ISO 683-13:1986, *Heat-treatable steels, alloy steels and free-cutting steels - Part 13: Wrought stainless steels.*

ISO 1001:1986, *Information processing - File structure and labelling of magnetic tapes for information interchange.*

ISO 1302:1992, *Technical drawings - Method of indicating surface texture on drawings.*

ISO 9661:1986, *Information processing - Data interchange on 12,7 mm (0.5 in) wide magnetic tape cartridges - 18-tracks, 1 491 data bytes per millimetre (37 871 data bytes per inch).*

ISO/IEC 11576:1993, *Information technology - Procedure for the registration of algorithms for the lossless compression of data.*

4 Definitions

For the purposes of this International Standard, the following definitions apply.

4.1 **algorithm:** A set of rules for transforming the logical representation of data.

4.2 **Average Signal Amplitude:** The average peak-to-peak value of the signal output of the read head measured over a minimum length of track of 25,4 mm exclusive of missing pulses.

4.3 **back surface:** The surface of the tape opposite the magnetic coating used to record data.

4.4 **Beginning of Tape (BOT):** The point along the length of the magnetic tape indicated by the start of the Density Identification Burst.

4.5 **byte:** An ordered set of eight bits acted upon as a unit.

4.6 **cartridge:** A container holding a supply reel of magnetic tape with an attached leader block.

4.7 **Cyclic Redundancy Check Character:** A character represented by two bytes, placed at the end of a byte string and used for error detection.

4.8 **Data Block:** The data entity resulting from concatenating one or more Packets, and appending control information.

4.9 **Data Records**

4.9.1 **Processed Data Record (PDR):** The data entity resulting from the application of an algorithm to a Logical Data Record.

4.9.2 **Host Data Record:** The data entity originally compiled by the host.

Copyright International Organization for Standardization
Provided by IHS under license with ISO
No reproduction or networking permitted without license from IHS Not for Resale

4.9.3 **Logical Data Record (LDR):** The data entity received by the system from the host. It may consist of one or several Host Data Record(s) depending upon action taken by the host to use extended blocks.

4.9.4 **User Data Record (UDR):** The data entity available to the Packet former.

When the data has been processed it shall be a PDR.
When the data has not been processed it shall be an LDR.

4.10 **Error Correcting Code:** A mathematical procedure yielding bits used for the detection and correction of errors.

4.11 **flux transition position:** That point which exhibits maximum free-space flux density normal to the surface of the tape.

4.12 **flux transition spacing:** The distance along a track between successive flux transitions.

4.13 **magnetic tape:** A tape which will accept and retain the magnetic signals intended for input, output and storage purposes on computers and associated equipment.

4.14 **Master Standard Reference Tape:** A tape selected as the standard for Reference Field, Signal Amplitude, Resolution and Overwrite.

Note 2 - A Master Standard Reference Tape has been established at the National Institute for Standards and Technology (NIST).

4.15 **Packet:** A UDR with a Packet Identifier and Packet Trailer added.

4.16 **Packet Identifier:** The group of 32 bytes added to the beginning of a UDR when forming a Packet.

4.17 **Packet Trailer:** The group of bytes of variable size appended to a UDR when forming a Packet.

4.18 **pad byte:** A byte having a bit pattern consisting of eight ZEROs.

4.19 **physical recording density:** The number of recorded flux transitions per unit length of track, expressed in flux transitions per millimetre (ftpmm).

4.20 **Postamble:** A repeated 9-bit pattern at the end of a Recorded Data Block providing electronic synchronization when reading in the reverse direction.

4.21 **Preamble:** A repeated 9-bit pattern at the beginning of a Recorded Data Block providing electronic synchronization when reading in the forward direction.

4.22 **Processed Data:** Data which has been processed by an algorithm.

4.23 **processing:** The use of an algorithm.

4.24 **Reference Field:** The Typical Field of the Master Standard Reference Tape.

4.25 **Secondary Standard Reference Tape:** A tape the performance of which is known and stated in relation to that of the Master Standard Reference Tape.

Note 3 - Secondary Standard Reference Tapes have been developed at the National Institute for Standards and Technology (NIST) and will be available from the NIST Office of Standard Reference Materials, Room 205, Building 202, National Institute of Standards and Technology, Gaithersburg, MA 20899, USA, under reference number SRM 3202, until January 2004.

It is intended that these be used for calibrating tertiary reference tapes for use in routine calibration.

Copyright International Organization for Standardization
Provided by IHS under license with ISO
No reproduction or networking permitted without license from IHS
Not for Resale

4.26 **Standard Reference Amplitude (SRA):** The Average Signal Amplitude from the Master Standard Reference Tape when it is recorded with the Test Recording Current on the NIST measurement system at 972 ftpmm.

Traceability to the Standard Reference Amplitude is provided by the calibration factors supplied with each Secondary Standard Reference Tape.

4.27 **Standard Reference Current:** The current that produces the Reference Field.

4.28 **Test Recording Current:** The current that is 1,5 times the Standard Reference Current.

4.29 **track:** A longitudinal area on the tape along which a series of magnetic signals may be recorded.

4.30 **Typical Field:** In the plot of the Average Signal Amplitude against the Recording Field at the physical recording density of 972 ftpmm, the minimum field that causes an Average Signal Amplitude equal to 85% of the maximum Average Signal Amplitude.

4.31 **transformation:** The manipulation of Host Data Records before formatting. It includes the operations of Processing, the formation of Packets and the concatenation of Packets.

5 Conventions and notations

5.1 Representation of numbers

The following conventions and notations apply in this International Standard, unless otherwise stated:

- In each field the bytes shall be arranged with Byte 1, the most significant, first. Within each byte the bits shall be arranged with Bit 1, the most significant, first and Bit 8, the least significant bit, last. This order applies to the data, and to the input and output of the error correcting codes and the cyclic redundancy codes.
- Letters and digits in parentheses represent numbers in hexadecimal notation.
- Numbers in binary notation and bit combinations are represented by strings of ZEROs and ONEs.
- Numbers in binary notation and bit combinations are shown with the most significant bit to the left.
- The setting of bits is denoted by ZERO or ONE.

5.2 Names

The names of entities are given with a capital initial letter.

5.3 Acronyms

BDM	Beginning of Data Mark
BOT	Beginning of Tape
CRC	Cyclic Redundancy Check
DRC	Diagonal Redundancy Check
ECC	Error Correcting Code
EDM	End of Data Mark
ID	Identifier
LDR	Logical Data Record
NB-SNR	Narrow band signal-to-noise ratio
PDR	Processed Data Record
RBW	Resolution BandWidth
SRA	Standard Reference Amplitude
STA	Short Term Average
TCR	Transform Change Record

Copyright International Organization for Standardization
Provided by IHS under license with ISO
No reproduction or networking permitted without license from IHS
Not for Resale

UDR	User Data Record
VBW	Video BandWidth
VRC	Vertical Redundancy Code

6 Environment and safety

Unless otherwise stated, the conditions specified below refer to the ambient conditions in the test or computer room and not to those within the tape equipment.

6.1 Cartridge/Tape testing environment

Unless otherwise stated, tests and measurements made on the tape cartridge to check the requirements of this International Standard shall be carried out under the following conditions:

temperature:	23 °C ± 2 °C
relative humidity:	40 % to 60 %
conditioning period before testing:	24 h

6.2 Cartridge operating environment

Cartridges used for data interchange shall be capable of operating under the following conditions:

temperature:	16 °C to 32 °C
relative humidity:	20 % to 80 %
wet bulb temperature:	25 °C max.

The average temperature of the air immediately surrounding the tape shall not exceed 40,5 °C.

Note 4 - Localized tape temperatures in excess of 49 °C may cause tape damage.

Conditioning before operating: If a cartridge has been exposed during storage and/or transportation to conditions outside the above values, it shall be conditioned for a period of at least 24 h.

6.3 Cartridge storage environment

Cartridges used for data interchange shall be stored under the following conditions.

temperature:	5 °C to 32 °C
relative humidity:	5 % to 80 %
wet bulb temperature:	26 °C max.

6.4 Safety requirements

6.4.1 Safeness

The cartridge and its components shall not constitute any safety or health hazard when used in its intended manner or in any foreseeable misuse in an information processing system.

6.4.2 Flammability

The cartridge and its components shall be made from materials which, if ignited from a match flame, do not continue to burn in a still carbon dioxide atmosphere.

6.5 Transportation

This International Standard does not specify parameters for the environment in which cartridges should be transported. Annex A gives some recommendations for transportation.

Copyright International Organization for Standardization
Provided by IHS under license with ISO
No reproduction or networking permitted without license from IHS
Not for Resale

Section 2 - Characteristics of the tape

7 Characteristics of the tape

7.1 Material

The tape shall consist of a base material (oriented polyethylene terephthalate film or its equivalent) coated on one side with a strong yet flexible layer of ferromagnetic material dispersed in a suitable binder. The back surface of the tape may also be coated with a ferromagnetic or non-ferromagnetic material.

7.2 Tape length

The length of the tape shall not be less than 165 m.

7.3 Tape width

The width of the tape shall be 12,650 mm ± 0,025 mm. The width shall be measured across the tape from edge-to-edge when the tape is under a tension of less than 0,28 N.

7.4 Tape discontinuity

There shall be no discontinuities in the tape such as those produced by tape splicing or perforations.

7.5 Total thickness of tape

The total thickness of the tape at any point shall be between 0,025 9 mm and 0,033 7 mm.

7.6 Base material thickness

The thickness of the base material shall be 0,023 4 mm nominal.

7.7 Longitudinal curvature

The radius of curvature of the edge of the tape shall not be less than 33 m.

Procedure

Allow a 1 m length of tape to unroll and assume its natural curvature on a flat smooth surface. Measure the deviation from a 1 m chord. The deviation shall not be greater than 3,8 mm. This deviation corresponds to the minimum radius of curvature of 33 m if measured over an arc of circle.

7.8 Out-of-plane distortions

All visual evidence of out-of-plane distortion shall be removed when the tape is subjected to a uniform tension of 0,6 N. Out-of-plane distortions are local deformations which cause portions of the tape to deviate from the plane of the surface of the tape. Out-of-plane distortions are most readily observed when the tape is lying on a flat surface under no tension.

7.9 Cupping

The departure across the width of tape from a flat surface shall not exceed 0,3 mm.

Procedure:

Cut a 1,0 m ± 0,1 m length of tape. Condition it for a minimum of 3 h in the test environment by hanging it so that the coated surface is freely exposed to the test environment. From the centre portion of the conditioned tape cut a test piece of length 25 mm. Stand the test piece on its end in a cylinder which is at least 25 mm high with an inside diameter of 13,0 mm ± 0,2 mm. With the cylinder standing on an optical comparator measure the cupping by aligning the edges of the test piece to the reticle and determining the distance from the aligned edges to the corresponding surface of the test piece at its centre.

Copyright International Organization for Standardization
Provided by IHS under license with ISO
No reproduction or networking permitted without license from IHS
Not for Resale

7.10 Dynamic frictional characteristics

In the tests of 7.10.1 and 7.10.2 the specified forces of 1,0 N and 1,50 N, respectively, comprise both the force component of the dynamic friction and the force of 0,64 N applied to the sample of tape.

Note 5 - Particular attention should be given to keeping the surfaces clean.

7.10.1 Frictional drag between the recording surface and the tape back surface

The force required to move the recording surface in relation to the back surface shall not be less than 1,0 N.

Procedure:

a) Wrap a test piece of tape around a 25,4 mm diameter circular mandrel with the back surface of the test piece facing outwards.

b) Place a second test piece of tape, with the recording surface facing inwards, around the first test piece for a total wrap angle of 90°.

c) Apply a force of 0,64 N to one end of the outer test piece of tape. Secure its other end to a force gauge which is mounted on a motorized linear slide.

d) Drive the slide at a speed of 1 mm/s.

7.10.2 Frictional drag between the tape recording surface and ferrite after environmental cycling

The force required to move the tape at a point 1,34 m from the leader block of the cartridge shall not be greater than 1,50 N. The force required at a point 4,3 m from the junction of the tape with the cartridge hub shall not exceed the first force by more than a factor of 4.

Procedure:

a) Wind tape on to a spool hub of diameter 50 mm to an outside diameter of 97 mm with a winding tension of 2,2 N ± 0,2 N.

b) Repeat the following two steps five times:

1) Store for 48 h at a temperature of 50 °C and a relative humidity of 10% to 20%.

2) Condition in the testing environment for 2 h and rewind with a tension of 2,2 N ± 0,2 N.

c) Condition the tape for 48 h at a temperature of 30,5 °C and a relative humidity of 85%. The tape shall remain in this environment for steps d) and e).

d) Apply a force of 0,64 N to one end of a test piece of not more than 1 m, taken 1,34 m from the leader block. Pass the test piece over a ferrite rod of diameter 25,4 mm with the recording surface in contact with the rod for a total wrap angle of 90°.

The rod shall be made from the ferrite specified in annex C. It shall be polished to a roughness value R_a of 0,05 µm (roughness grade N2, ISO 1302). Pull the other end of the test piece horizontally at 1 mm/s.

e) Repeat step d) for a similar test piece taken 4,3 m from the junction of the tape with the cartridge hub.

7.11 Coating adhesion

See figure 1.

The force required to peel any part of the coating from the tape base material shall not be less than 1,5 N.

Procedure:

a) Take a test piece of the tape approximately 380 mm long and scribe a line through the recording coating across the width of the tape 125 mm from one end.

Copyright International Organization for Standardization
Provided by IHS under license with ISO
No reproduction or networking permitted without license from IHS
Not for Resale

b) Using a double-sided pressure sensitive tape, attach the full width of the test piece to a smooth metal plate, with the recording surface facing the plate, as shown in the figure below.

c) Fold the test piece over 180°, attach the metal plate and the free end of the test piece to the jaws of a universal testing machine and set the speed of the jaw separation to 254 mm per min.

d) Note the force at which any part of the coating first separates from the base material. If this is less than 1,5 N, the test has failed. If the test piece peels away from the double-sided pressure sensitive tape before the force exceeds 1,5 N, an alternative type of double-sided pressure sensitive tape shall be used.

e) If the back surface of the tape is coated, repeat a) to d) for the back coating.

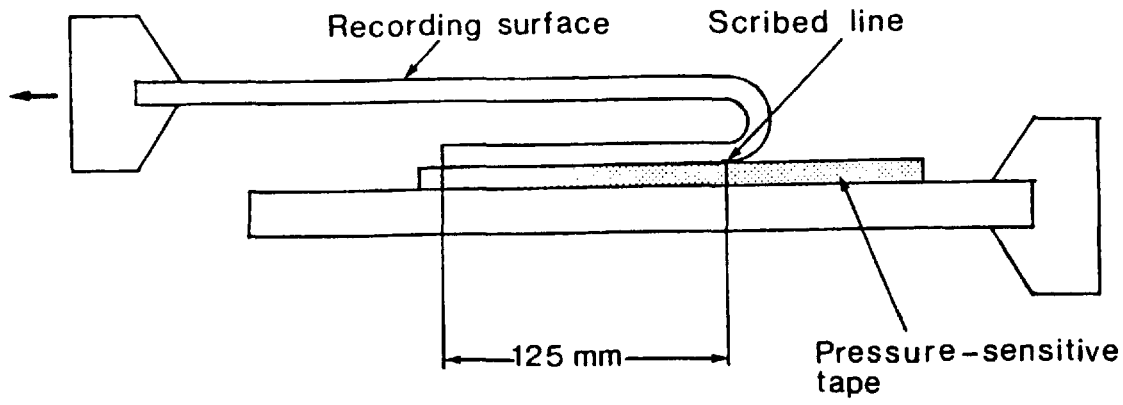

Figure 1 - Coating adhesion

7.12 Flexural rigidity

The flexural rigidity of the tape in the longitudinal direction shall be between 0,06 N·mm^2 and 0,16 N·mm^2.

Procedure:

Clamp a 180 mm test piece of tape in a universal testing machine, allowing a 100 mm separation between the machine jaws. Set the jaw separation speed at 5 mm per minute. Plot force against distance. Calculate the flexural rigidity using the slope of the curve between 2,2 N and 6,7 N by the formula

$$E = \frac{\delta F / WT}{\delta L / L}$$

$$I = WT^3 / 12$$

Flexural rigidity = EI

where

δF is the change in force in newtons;

T is the measured thickness in millimetres;

W is the measured width in millimetres;

$\delta L/L$ is the change in sample length between the jaws divided by the original length between the jaws.

7.13 Electrical resistance of coated surfaces

The electrical resistance of any square area of the recording surface shall be within the range

Copyright International Organization for Standardization
Provided by IHS under license with ISO
No reproduction or networking permitted without license from IHS
Not for Resale

- 10^5 Ω to 5×10^8 Ω for non-backcoated tapes;
- 10^5 Ω to 5×10^9 Ω for backcoated tapes.

The electrical resistance of any backcoating shall be less than 10^6 Ω.

Procedure:

Condition a test piece of tape to the test environment for 24 h Position the test piece over two 24-carat gold-plated, semi-circular electrodes having a radius r = 25,4 mm and a finish of at least N4, so that the recording surface is in contact with each electrode. These electrodes shall be placed parallel to the ground and parallel to each other at a distance d = 12,7 mm between their centres. Apply a force F of 1,62 N to each end of the sample. Apply a d.c. voltage of 500 V ± 10 V across the electrodes and measure the resulting current flow. From this value, determine the electrical resistance.

Repeat for a total of five positions along the test piece and average the five resistance readings. For back-coated tape repeat the procedure with the backcoating in contact with the electrodes.

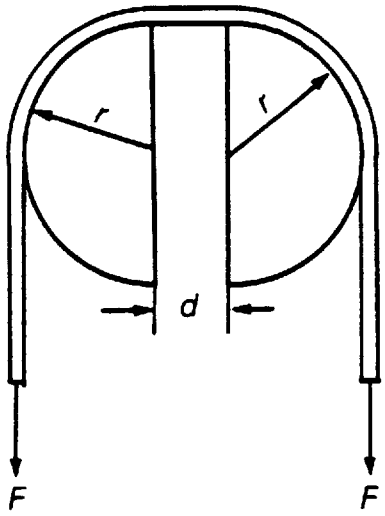

When mounting the sample, make sure that no conducting paths exist between the electrodes except that through the coating under test.

Note 6 - Particular attention should be given to keeping the surfaces clean.

7.14 Tape durability

This International Standard does not specify parameters for assessing tape durability.

However, a recommended procedure is described in annex D.

7.15 Inhibitor tape

This International Standard does not specify parameters for assessing whether or not a tape is an inhibitor tape.

However, annex B gives further information on inhibitor tapes.

7.16 Tape abrasivity

Tape abrasivity is the tendency of the tape to wear the tape transport. The length of the wear pattern on a wear bar shall not exceed 56 µm when measured as specified in annex C.

Copyright International Organization for Standardization
Provided by IHS under license with ISO
No reproduction or networking permitted without license from IHS
Not for Resale

7.17 Pre-recording condition

Prior to recording data, or to testing, the tape shall have been erased utilizing alternating magnetic fields of decaying levels (anhysteretic process) to ensure that the remanent magnetic moment of the recording surface does not exceed 20% of the maximum remanent magnetic moment. Annex E specifies the method of measurement.

In addition no low density transitions shall be present on the tape.

7.18 Magnetic recording characteristics

The magnetic recording characteristics shall be as defined by the test requirements given below.

When performing these tests, the output or resultant signal shall be measured on the same relative pass for both a tape calibrated to the Master Standard Reference Tape and the tape under test (read-while-write or first forward-read-pass) on the same equipment.

The following conditions shall apply to the testing of all magnetic recording characteristics, unless otherwise noted.

- tape condition : pre-recording condition
- tape speed : not greater than 2,5 m/s
- read-track : within the written track
- azimuth alignment : not greater than 6' between the mean write transitions and the read gap
- write-gap length : 1,4 µm ± 0,2 µm
- write head saturation density : 0,34 T ± 0,03 T
- tape tension : 2,2 N ± 0,2 N
- recording current : Test Recording Current

7.18.1 Typical Field

The Typical Field of the tape shall be between 90% and 110% of the Reference Field.

Traceability to the Reference Field is provided by the calibration factors supplied with each Secondary Standard Reference Tape.

7.18.2 Signal amplitude

The Average Signal Amplitude at the physical recording density of 972 ftpmm shall be between 70% and 140% of the SRA.

Traceability to the SRA is provided by the calibration factors supplied with each Secondary Standard Reference Tape.

7.18.3 Resolution

The ratio of the Average Signal Amplitude at the physical recording density of 1 458 ftpmm to that at the physical recording density of 972 ftpmm shall be between 80% and 120% of the same ratio for the Master Standard Reference Tape.

Traceability to the resolution of the Master Standard Reference Tape is provided by the calibration factors supplied with each Secondary Standard Reference Tape.

7.18.4 Overwrite

Overwrite is the ratio of the Average Signal Amplitude of the residual of the fundamental frequency of a tone pattern after being overwritten at 972 ftpmm to the Average Signal Amplitude of the 972 ftpmm signal. The Average Signal Amplitude of the tone pattern is the peak-to-peak amplitude of the sinusoidal signal with equal rms power.

7.18.4.1 Requirement

The overwrite for the tape shall be less than 120% of the overwrite for the Master Standard Reference Tape.

Copyright International Organization for Standardization
Provided by IHS under license with ISO
No reproduction or networking permitted without license from IHS
Not for Resale

Traceability to the overwrite of the Master Standard Reference Tape is provided by the calibration factors supplied with each Secondary Standard Reference Tape.

7.18.4.2 Procedure

Record a tone pattern which shall be the following sequence of flux transitions:

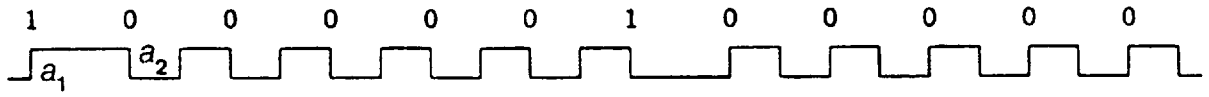

where
a_1 = 1,029 µm
a_2 = 0,514 µm

Record a 972 ftpmm signal over the tone pattern. Measure the Average Signal Amplitude of the residual of the fundamental frequency of the tone pattern (one sixth of the frequency of the 972 ftpmm signal) and the Average Signal Amplitude of the 972 ftpmm signal. Both amplitude measurements should be made using suitable filters.

7.18.5 Narrow-band signal-to-noise ratio (NB-SNR)

The Narrow-band signal-to-noise ratio is the Average Signal Amplitude rms power divided by the average integrated (side band) rms noise power, and is expressed in decibels.

7.18.5.1 Requirement

The NB-SNR shall be equal to, or greater than, 30 dB when normalized to a track width of 410 µm. The normalization factor is dB(410) = dB(W) + 10 log 410/W, where W is the track width used when measuring dB(W).

7.18.5.2 Procedure

The NB-SNR shall be measured using a spectrum analyzer with a resolution bandwidth (RBW) of 1 kHz and a video bandwidth (VBW) of 10 Hz. The tape speed shall be 762 mm/s for the frequencies specified below.

The NB-SNR shall be measured as follows:

a) Measure the read-signal amplitude of the 972 ftpmm signal, taking a minimum of 150 samples over a minimum length of tape of 46 m.

b) On the next pass (read only) measure the rms noise power over the same section of tape and integrate the rms noise power (normalizing for the actual resolution bandwidth) over the range from 332 kHz to 366 kHz.

For other tape speeds all the frequencies shall be linearly scaled.

7.19 Tape quality

The tape quality (including the effects of exposure to storage and transportation environments) is defined by the testing requirements given in the following clauses. The following conditions shall apply to all quality testing requirements.

- environment : operating environment
- tape condition : pre-recording condition
- tape speed : 2 m/s
- read-track width : 410 µm
- physical recording density : 972 ftpmm
- write-gap length : 1,4 µm ± 0,2 µm

--`,,`-`-`,,`,,`,`,,`---
Copyright International Organization for Standardization
Provided by IHS under license with ISO
No reproduction or networking permitted without license from IHS
Not for Resale

- azimuth alignment : not greater than 6' between the mean write transitions and the read gap
- write head saturation density : 0,34 T ± 0,03 T
- recording current : Test Recording Current
- format : 18 tracks
- tape tension : 2,2 N ± 0,2 N

7.19.1 Missing pulses

A missing pulse is a loss of read signal amplitude. A missing pulse exists when the base-to-peak read signal amplitude is 25%, or less, of half the Average Signal Amplitude for the preceding 25,4 mm of tape.

7.19.2 Missing pulse zones

A missing pulse zone begins with a missing pulse and ends when 64 consecutive flux transitions are detected or a length of 1 mm of tape has been measured.

The missing pulse zone rate shall be less than one in 8×10^6 flux transitions recorded.

7.19.3 Coincident missing pulse zones

There are two 9-track groups in the 18-track format. One group comprises the odd-numbered tracks, the other group comprises the even-numbered tracks. A simultaneous missing pulse zone condition on two or more tracks of a 9-track group is a coincident missing pulse zone.

If a coincident missing pulse zone occurs at the same time in both groups of tracks, it shall be considered as a single coincident missing pulse zone. Its length shall begin with the start of the earliest coincident missing pulse zone and terminate with the end of the latest coincident missing pulse zone.

No 165 m length of tape shall have more than 12 coincident missing pulse zones.

No coincident missing pulse zone shall exceed 50 mm.

Section 3 - Cartridge

8 Dimensional and mechanical characteristics of the cartridge

The cartridge shall consist of the following elements:

- a case,
- a reel for the magnetic tape,
- a magnetic tape wound on the hub of the reel,
- a locking mechanism for the reel,
- a write-inhibit mechanism,
- a leader block,
- a latching mechanism for the leader block.

Dimensional characteristics are specified for those parameters deemed mandatory for interchange and compatible use of the cartridge. Where there is freedom of design, only the functional characteristics of the elements described are indicated. Figures 2 to 16 depict a typical implementation.

Where they are purely descriptive the dimensions are referred to three Reference Surfaces A, B and C forming a geometrical trihedral (see figure 2). Where the dimensions are related to the position of the cartridge in the drive, they may be referred to another surface of the cartridge. Figures 3 to 10 show the dimensions of the empty case.

Figure 2 is a general view of the whole cartridge.
Figure 3 shows the front side of the case which lies on Reference Surface A.
Figure 4 shows the top side of the case.
Figure 5 shows the rear side of the case.

Copyright International Organization for Standardization
Provided by IHS under license with ISO
No reproduction or networking permitted without license from IHS Not for Resale

Figure 6 shows the bottom side of the case which lies in Reference Surface C.
Figure 7 shows the side of the case which lies in Reference Surface B.
Figure 8 shows an enlarged view of a part of figure 3.
Figure 9 shows an enlarged cross-section of a location notch.
Figure 10 shows an enlarged cross-section of a detail of the opening of the case.
Figure 11 shows an enlarged partial cross-section of the cartridge in hand.
Figure 12 shows the same cross-section as figure 11 but of the cartridge in the drive.
Figure 13 shows schematically the teeth of the toothed rim.
Figure 14 shows two views and an enlarged cross-section of the leader block.
Figure 15 shows the fixation of the tape to the leader block.
Figure 16 shows the leader block inserted in the case.

8.1 Overall dimensions (figures 3 to 5)

The overall dimensions of the case shall be

$l_1 = 125{,}00 \text{ mm} \pm 0{,}32 \text{ mm}$

$l_2 = 109{,}00 \text{ mm} \pm 0{,}32 \text{ mm}$

$l_3 = 24{,}50 \text{ mm} \begin{matrix} +0{,}50 \text{ mm} \\ -0{,}32 \text{ mm} \end{matrix}$

The corners of the case shall be rounded off as specified by

$r_1 = 3{,}00$ max.

$r_2 = 4{,}00$ max.

$r_3 = 3{,}00$ min.

8.2 Write-inhibit mechanism (figures 3 and 4)

The write-inhibit mechanism shall have a flat surface identified by a visual mark, e.g. a white spot, when in the position in which writing is inhibited.

The flat surface shall be accessible through a window in the front side of the case. The location and dimensions of the window are specified by

$l_4 = 11{,}80 \text{ mm} \pm 0{,}25 \text{ mm}$

$l_5 = 15{,}60 \text{ mm} \pm 0{,}25 \text{ mm}$

$l_6 = 7{,}40 \text{ mm} \pm 0{,}25 \text{ mm}$

$l_7 = 12{,}00 \text{ mm} \pm 0{,}25 \text{ mm}$

In the write-inhibit position the flat surface of the write-inhibit mechanism shall be behind this window at a distance

$l_8 = 2{,}55$ mm min.

from the front side of the case.

In the write-enable position this surface shall be within 0,25 mm of the front side of the case.

The force required for the operation of the write-inhibit mechanism shall be in the range

2 N to 9 N

when applied tangentially to the surface of the case.

Copyright International Organization for Standardization
Provided by IHS under license with ISO
No reproduction or networking permitted without license from IHS
Not for Resale

This International Standard does not prescribe the actual implementation of the write-inhibit mechanism. For example, it can be a rotatable or a slidable element. The implementation may require a larger or additional window but shall not impair the integrity of the case against potential contaminants.

8.3 Label area of the rear side (figures 4 to 5)

On the rear side of the case there shall be a label area specified by

l_9 = 7,00 mm ± 0,25 mm

l_{10} = 80,00 mm $^{+\,0,30\ \text{mm}}_{-\,0,16\ \text{mm}}$

l_{11} = 12,30 mm ± 0,25 mm

l_{12} = 0,50 mm ± 0,25 mm

r_4 = 1,00 mm max.

8.4 Label area of the top side (figure 4)

On the top side of the case there shall be a label area, recessed by 0,50 mm ± 0,25 mm, specified by l_9, l_{10}, l_{12} and in addition by

l_{13} = 31,00 mm ± 0,25 mm

l_{14} = 75,00 mm $^{+\,0,30\ \text{mm}}_{-\,0,16\ \text{mm}}$

8.5 Case opening (figures 3, 4, 6 and 8)

The case shall have an opening for the tape in which the leader block can be inserted (see also figure 16). This opening shall be specified by

l_{15} = 4,70 mm ± 0,25 mm

l_{16} = 14,90 mm ± 0,32 mm

l_{17} = 7,50 mm ± 0,25 mm

l_{18} = 87,10 mm ± 0,25 mm

l_{19} = 4,00 mm ± 0,25 mm

r_5 = 4,00 mm ± 0,25 mm

α = 50° ± 1°

Moreover, figure 8 shows at a larger scale the details of the configuration of the case opening as seen at the right-hand side of figure 3.

l_{61} = 3,9 mm ± 0,5 mm

l_{62} = 16,9 mm $^{+\,0,5\ \text{mm}}_{-\,0,4\ \text{mm}}$

l_{63} = 3,0 mm ± 0,5 mm

l_{64} = 11,6 mm ± 0,5 mm

ω_1 = 1° ± 30'

ω_2 = 20° ± 2°

Copyright International Organization for Standardization
Provided by IHS under license with ISO
No reproduction or networking permitted without license from IHS
Not for Resale

8.6 Locating notches (figures 6, 7 and 9)

There shall be two locating notches open towards the bottom side. These location notches shall be specified by

l_{20} = 106,00 mm ± 0,25 mm

l_{21} = 5,00 mm ± 0,25 mm

l_{22} = 7,00 mm ± 0,25 mm

l_{23} = 104,00 mm ± 0,25 mm

l_{24} = 2,50 mm ± 0,25 mm

β = 1°30' ± 30'

γ = 2° ± 30'

8.7 Locating areas (figure 6)

The bottom side of the case shall have three circular locating areas a_1, a_2 and a_3 which shall lie in the same horizontal plane within 0,25 mm.

Areas a_1 and a_2 shall have a diameter of 10,00 mm ± 0,25 mm. The positions of their centres shall be specified by

l_{25} = 108,50 mm ± 0,25 mm

l_{26} = 3,50 mm ± 0,25 mm

l_{27} = 105,50 mm ± 0,25 mm

Area a_3 shall have a diameter of 14,00 mm ± 0,25 mm. The position of its centre shall be specified by

l_{28} = 31,25 mm ± 0,25 mm

l_{29} = 54,50 mm ± 0,25 mm

8.8 Inside configuration of the case around the case opening (figures 6 and 10)

Figures 6 and 10 show the inside configuration of the case around the opening of the case. This configuration shall be defined as follows (see also 8.10)

l_{30} = 3,30 mm ± 0,25 mm

l_{31} = 18,40 mm ± 0,25 mm

r_6 = 1,50 mm ± 0,25 mm

r_7 = 1,50 mm ± 0,25 mm

The oblique edge of the case shall be tangential to the arc of circle defined by r_6 at an angle

λ = 40° ± 30'

8.9 Other external dimensions of the case (figure 7)

The external form of the case shall be further specified by

l_{32} = 113,2 mm ± 0,3 mm

l_{33} = 26,00 mm ± 0,25 mm

r_8 = 145,50 mm ± 0,25 mm

r_9 = 145,50 mm ± 0,25 mm

δ = 30° ± 30'

Copyright International Organization for Standardization
Provided by IHS under license with ISO
No reproduction or networking permitted without license from IHS
Not for Resale

8.10 Central window (figure 6)

The bottom side of the case shall have a central window. The location of its centre shall be specified by l_{29} and

$$l_{34} = 61{,}00 \text{ mm} \pm 0{,}25 \text{ mm}$$

Its diameter shall be

$$d_1 = 43{,}5 \text{ mm} \quad {}^{+\,2{,}0 \text{ mm}}_{-\,1{,}0 \text{ mm}}$$

The angle with its apex at the centre of this window and formed by the two lines tangential to the parts shown in figure 6 in cross-section shall be

$$\theta = 16° \pm 30'$$

8.11 Stacking ribs

The bottom side of the case shall have two parallel stacking ribs. Their dimensions shall be

$$l_{35} = 5{,}00 \text{ mm} \pm 0{,}25 \text{ mm}$$

$$l_{36} = 1{,}00 \text{ mm} \pm 0{,}16 \text{ mm}$$

$$l_{37} = 74{,}50 \text{ mm} \pm 0{,}25 \text{ mm}$$

Their locations shall be

$$l_{38} = 31{,}00 \text{ mm} \pm 0{,}25 \text{ mm}$$

$$l_{39} = 7{,}50 \text{ mm} \pm 0{,}32 \text{ mm}$$

$$l_{40} = 79{,}50 \text{ mm} \pm 0{,}25 \text{ mm}$$

8.12 Flexibility of the case

The flexibility of the top and bottom sides of the case (see figure 2) is the amount of deflection observed when they are submitted to a perpendicular force F.

8.12.1 Requirements

The amount of deflection d shall meet the following requirements:

Deflection of the top side:

$$0{,}0256\,F \leq d \leq 0{,}38 + 0{,}054\,F$$

Deflection of the bottom side:

$$0{,}0228\,F \leq d \leq 0{,}38 + 0{,}040\,F$$

where

d is the measured deflection in millimetres.

$$4{,}5 \text{ N} \leq F \leq 54{,}0 \text{ N}$$

8.12.2 Procedure

The flexibility of the case shall be measured in a universal testing machine operating in the compression mode. Use a suitable load cell for the test. Apply a single point load with a radius of 10 mm ± 1 mm on the bottom and subsequently on the top of the cartridge at the points shown in figure 4 and figure 6, and specified by

$$l_{65} = 86{,}9 \text{ mm nominal}$$

$$l_{66} = 54{,}5 \text{ mm nominal}$$

Copyright International Organization for Standardization
Provided by IHS under license with ISO
No reproduction or networking permitted without license from IHS
Not for Resale

8.13 Tape reel (figures 11 and 12)

Figures 10 and 11 show the tape reel mounted within the case. Figure 11 specifies the different dimensions of the reel when the cartridge is in hand, figure 12 when it is within the drive. For the sake of clarity the stacking ribs are not shown in figures 11 and 12.

8.13.1 Locking mechanism (figure 12)

This International Standard does not specify the actual implementation of the locking mechanism. However, functionally it shall satisfy the following requirements in the locked position:

- the angular resolution shall not be greater than 6°;
- the reel shall not rotate by more than 10° when a torque not greater than 0,32 N·m is applied in the direction that will cause the tape to unwind.

The button of the locking mechanism shall be made of nylon 6/6 with 2 % ± 1 % molybdenum disulphide.

Its dimensions shall be

d_9 = 2,0 mm ± 0,5 mm

d_{10} = 10,0 mm ± 0,2 mm

ρ = 15° ± 2°

8.13.2 Axis of rotation of the reel

The axis of rotation of the reel shall be perpendicular to plane P (see figure 13 and 8.13.7) and pass through the centre of the central window as specified by l_{29} and l_{34}.

8.13.3 Metallic insert

The reel shall have a metallic insert made of stainless steel (ISO 683-13, type 3 or 7). It shall withstand a pull out force of 300 N min. Its dimensions shall be

$d_2 = 35{,}00\ \text{mm}\ {}^{+\,0{,}20\ \text{mm}}_{-\,1{,}20\ \text{mm}}$

d_3 = 11,15 mm ± 0,05 mm

e_1 = 1,51 mm ± 0,10 mm

Its central opening (diameter d_3) shall be concentric with the axis of rotation of the reel within 0,15 mm.

The metallic insert shall be parallel to plane P within 0,15 mm.

8.13.4 Toothed rim

The reel shall have a toothed rim accessible through the central window, and having the dimensions

$d_4 = 36{,}00\ \text{mm}\ {}^{+\,0{,}50\ \text{mm}}_{-\,0{,}00\ \text{mm}}$

d_5 = 41,00 mm ± 0,25 mm

ψ = 11°3' ± 5'

8.13.5 Hub of the reel

The hub of the reel shall have a diameter

$d_6 = 50{,}0\ \text{mm}\ {}^{+\,0{,}0\ \text{mm}}_{-\,0{,}2\ \text{mm}}$

Copyright International Organization for Standardization
Provided by IHS under license with ISO
No reproduction or networking permitted without license from IHS
Not for Resale

Further dimensions of the hub shall be

$$l_{41} = 13{,}05 \text{ mm} \begin{matrix} +0{,}20 \text{ mm} \\ -0{,}10 \text{ mm} \end{matrix}$$

when measured at the hub surface, and

$$r_{10} = 0{,}08 \text{ mm max.}$$

The hub shall meet the following requirements:

- the straightness of the hub surface shall be within 0,04 mm;
- the perpendicularity to the plane P through the pitch line of the teeth of the rim (see 8.13.7) shall be within 0,07 mm;
- the ratio of the difference in the diameters d_6 of any two sections (perpendicular to the axis) to the distance between these sections shall not exceed 0,003 8;
- the rate of change across the width of the hub surface shall not exceed 0,025 mm mm/mm;
- the total runout of the hub related to the cylinder perpendicular to the circular pitch line (see 8.13.7) of the teeth of the toothed rim shall not exceed 0,2 mm total indicator reading (TIR).

8.13.6 Relative positions

8.13.6.1 With the cartridge in hand (figure 11):

- the distance of the tip of the button of the locking mechanism to Reference Surface C shall be

$$l_{42} = 1{,}90 \text{ mm} \begin{matrix} +1{,}40 \text{ mm} \\ -0{,}90 \text{ mm} \end{matrix}$$

- the distance from the bottom surface of the metallic insert to Reference Surface C shall be

$$l_{43} = 0{,}4 \text{ mm} \begin{matrix} +1{,}0 \text{ mm} \\ -0{,}5 \text{ mm} \end{matrix}$$

8.13.6.2 Whether the cartridge is in hand or in the drive (figures 11 and 12):

- the distance from the bottom surface of the metallic insert to plane P shall be

  $l_{44} = 2{,}27 \text{ mm} \pm 0{,}12 \text{ mm}$

- the distance of the inside of the lower flange of the reel to plane P shall be

  $l_{45} = 0{,}65 \text{ mm} \pm 0{,}09 \text{ mm}$

8.13.6.3 With the cartridge in the drive (figure 12):

- the distance from the tip of the button of the locking mechanism to Reference Surface C shall be

  $l_{46} = 8{,}1 \text{ mm} \pm 0{,}2 \text{ mm}$

- the force required to move the button into this position shall not exceed 12,25 N,
- the distance from the centreline of the tape to Reference Surface C shall be

  $l_{47} = 12{,}25 \text{ mm nominal}$

- the distance from the Reference Surface C to plane P (see 8.13.7) shall be:

  $l_{60} = 5{,}04 \text{ mm} \pm 0{,}20 \text{ mm}$

Copyright International Organization for Standardization
Provided by IHS under license with ISO
No reproduction or networking permitted without license from IHS
Not for Resale

8.13.7 Characteristics of the toothed rim (figure 13)

The toothed rim shall comprise 60 teeth spaced at an angle of

$6°0' \pm 5'$ non-cumulative

The teeth are specified at the pitch diameter d_5 by

$l_{48} = 4$ mm nominal

$l_{49} = 2$ mm nominal

$\varphi = 30°$ nominal

The pitch line is the circumference of the teeth taken at the distance l_{49}. The plane in which it lies is the plane P mentioned above.

The blend radius at the bottom of the teeth shall be

$r_{11} = 0{,}25$ mm max.

The blend radius at the tip of the teeth shall be

$0{,}10 \text{ mm} \leq r_{12} \leq 0{,}30 \text{ mm}$

8.14 Leader block (figure 14)

The leader block shall have the following dimensions:

$l_{50} = 31{,}80 \text{ mm} \pm 0{,}04 \text{ mm}$

$l_{51} = 6{,}8 \text{ mm} \pm 0{,}1 \text{ mm}$

$l_{52} = 21{,}8 \text{ mm} \pm 0{,}2 \text{ mm}$

$l_{53} = 10{,}93 \text{ mm} \begin{smallmatrix} +0{,}06 \text{ mm} \\ -0{,}08 \text{ mm} \end{smallmatrix}$

$l_{54} = 5{,}46 \text{ mm} \pm 0{,}10 \text{ mm}$

$l_{55} = 6{,}00 \text{ mm} \pm 0{,}25 \text{ mm}$

$l_{56} = 16{,}5 \text{ mm} \begin{smallmatrix} +0{,}0 \text{ mm} \\ -0{,}2 \text{ mm} \end{smallmatrix}$

$l_{57} = 5{,}2 \text{ mm} \pm 0{,}2 \text{ mm}$

$r_{13} = 25{,}00 \text{ mm} \pm 0{,}25 \text{ mm}$

$r_{14} = 1{,}4 \text{ mm} \pm 0{,}2 \text{ mm}$

$r_{15} = 5{,}50 \text{ mm} \pm 0{,}25 \text{ mm}$

$d_7 = 7{,}0 \text{ mm} \pm 0{,}2 \text{ mm}$

$d_8 = 4{,}0 \text{ mm} \pm 0{,}2 \text{ mm}$

$\mu_1 = 90° \pm 2°$

$\mu_2 = 8° \begin{smallmatrix} +0° \\ -3° \end{smallmatrix}$

$\mu_3 = 44° \begin{smallmatrix} +0° \\ -3° \end{smallmatrix}$

Copyright International Organization for Standardization
Provided by IHS under license with ISO
No reproduction or networking permitted without license from IHS
Not for Resale

8.15 Attachment of the tape to the header block (figure 15)

There shall be a cylindrical insert for attaching the tape to the leader block. It shall cover the full width of the tape and not protrude beyond the surfaces of the leader block.

In zone Z the bottom edge of the tape (as seen in figure 15) shall be parallel to the edge of the leader block within 0,12 mm and shall be at a distance

$$l_{58} = 1{,}90 \text{ mm} \pm 0{,}26 \text{ mm}$$

from it, when measured while the tape is under tension.

When fixed to the leader block the end of the tape shall not protrude above the surface of the leader block by more than

$$l_{59} = 2{,}5 \text{ mm}$$

The leader block shall remain attached to the tape when a force of 10 N is applied at an angle

$$\mu_4 = 38° \pm 2°$$

as shown in figure 15.

8.16 Latching mechanism (figure 16)

This International Standard does not specify the actual implementation of the latching mechanism for the leader block. It specifies the position of the leader block and the forces required to pull out and to insert it.

When the leader block is latched into the case, the point defined by l_{51} and l_{54} (see figure 14) shall fall within a circle of radius 0,5 mm max. the centre of which is defined by the intersection of the two lines specified by the nominal values of l_{17} and l_{18} (see figure 4).

The pull-out force, i.e. the force required to pull the leader block and the tape attached to it out of the cartridge shall satisfy both following conditions:

- to be in the range 2,0 N to 7,5 N, and
- the product of the maximum value of the pull-out force and the displacement distance shall be less than 13 N·mm.

The insertion force shall be measured at the same angle and jaw separation speed as the pull-out force.

Procedure: Clamp the cartridge in a universal testing machine that can extract the leader block at the angle μ_5 starting at the pickup point (see figure 16). The leader block pickup point is located by the intersection of the centre lines positioned by dimensions l_{17}, l_{18}. Set the jaw separation speed to 10 mm/min, pull the leader block allowing it to pivot on the pulling pin as it exits the cartridge. Measure the distance between the point where the force first exceeds 0,5 N and the point where the maximum pull-out force is observed. The force shall be measured with a pin that fits into diameters d_7 and d_8 (see figure 14).

The insertion force, i.e. the force required to push the leader block into latched position in the cartridge shall not be greater than 12 N when measured at an angle

$$\mu_5 = 48° \pm 3°.$$

8.17 Tape wind

When the cartridge is viewed from the top, the tape shall be wound counter-clockwise and with the recording surface toward the hub.

8.18 Wind tension

The tape shall be wound with a tension of

Copyright International Organization for Standardization
Provided by IHS under license with ISO
No reproduction or networking permitted without license from IHS
Not for Resale

2,2 N ± 0,3 N

8.19 Circumference of the tape reel

The tape shall be wound to a circumference of between 280 mm and 307 mm.

8.20 Moment of inertia

The moment of inertia of the tape reel is the ratio of the torque applied to it (complete with tape, hub and flanges) when it is free to rotate about a given axis to the angular acceleration thus produced about that axis.

The moment of inertia of the reel and tape shall be

- between 145×10^{-6} kg·m^2 and 180×10^{-6} kg·m^2 when the circumference is not less than 280 mm and less than 289 mm.
- between 160×10^{-6} kg·m^2 and 195×10^{-6} kg·m^2 when the circumference is not less than 289 mm and less than 298 mm.
- between 180×10^{-6} kg·m^2 and 216×10^{-6} kg·m^2 when the circumference is not less than 298 mm and not greater than 307 mm.
- The moment of inertia of the empty reel shall be

  $33{,}00 \times 10^{-6}$ kg·m^2 ± $3{,}63 \times 10^{-6}$ kg·m^2.

Procedure: Torsionally oscillate the reel on an inertial dynamics unit. The oscillation period shall be measured electronically with a universal counter. The oscillation time shall then be converted to its rotational inertial value.

Copyright International Organization for Standardization
Provided by IHS under license with ISO
No reproduction or networking permitted without license from IHS
Not for Resale

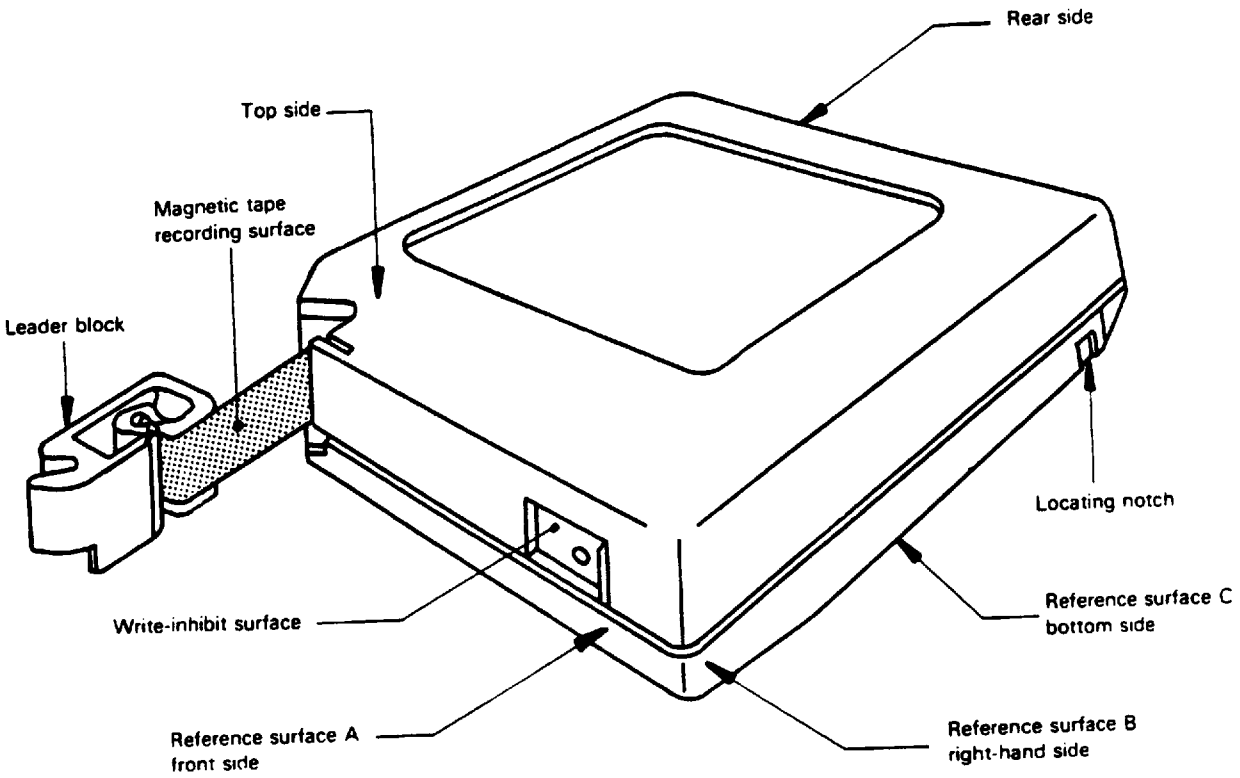

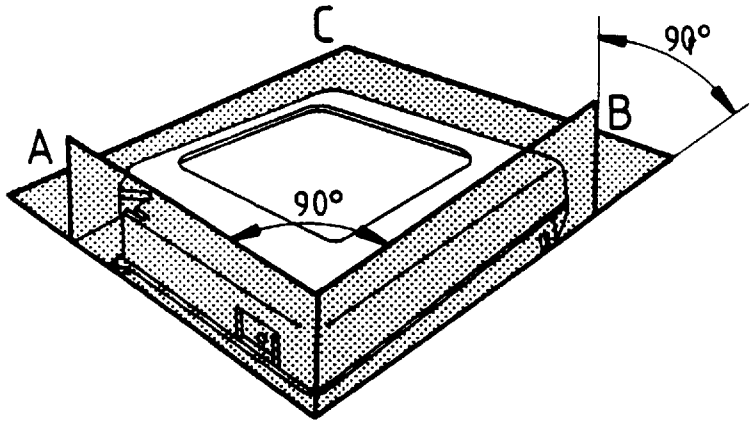

Figure 2 - General view of cartridge

Copyright International Organization for Standardization
Provided by IHS under license with ISO
No reproduction or networking permitted without license from IHS
Not for Resale

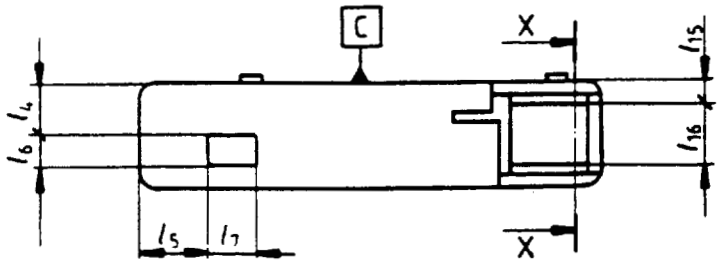

Figure 3 - Front side of case

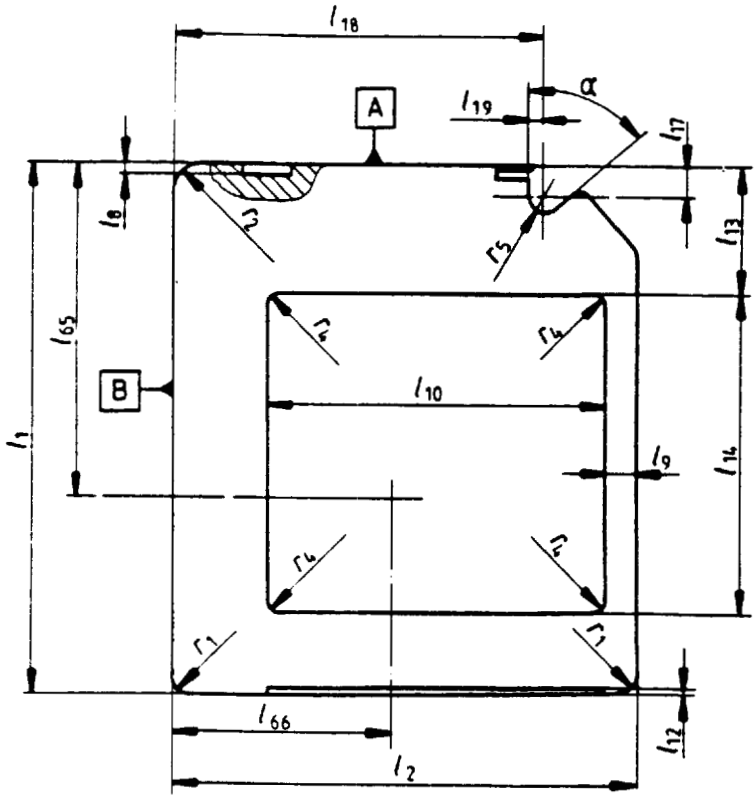

Figure 4 - Top side of case

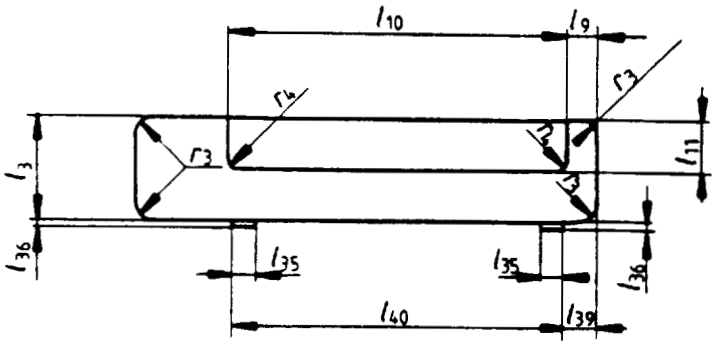

Figure 5 - Rear side of case

Copyright International Organization for Standardization
Provided by IHS under license with ISO
No reproduction or networking permitted without license from IHS
Not for Resale

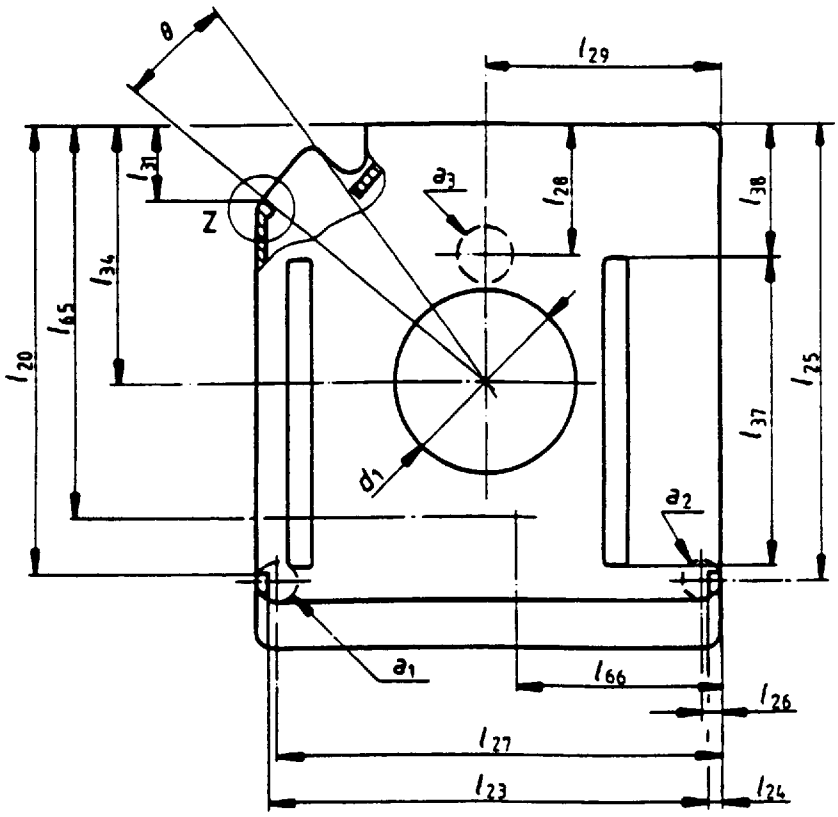

Figure 6 - Bottom side of case

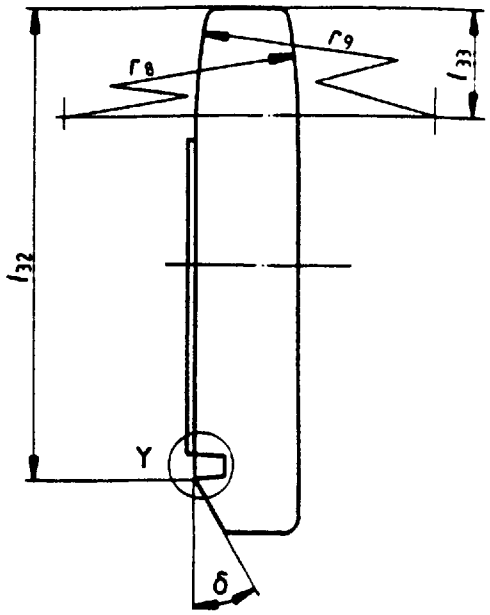

Figure 7 - Side of case

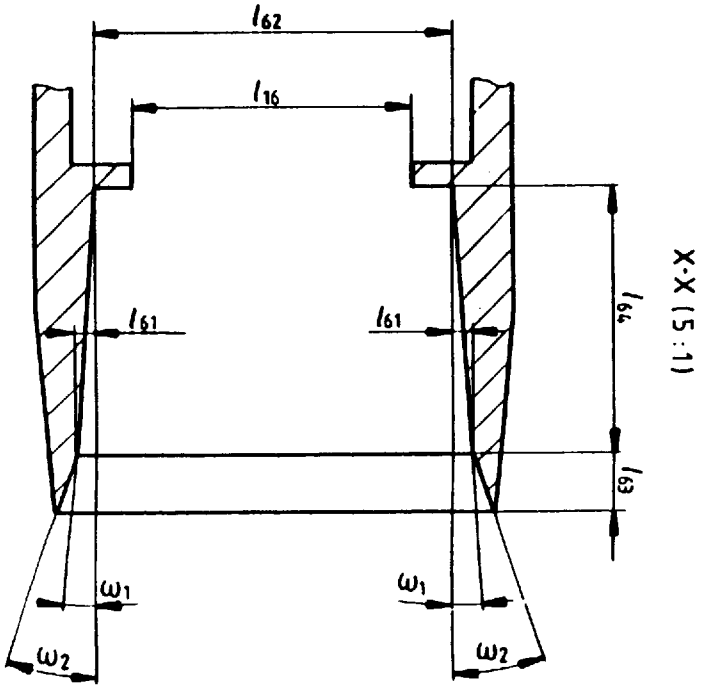

Figure 8 - Enlarged view

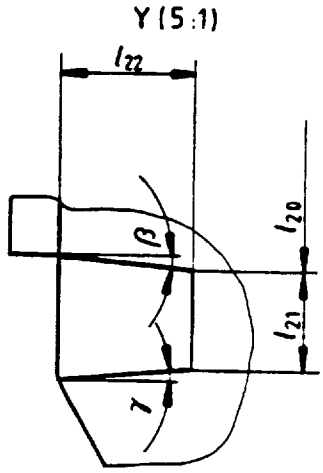

Figure 9 - Cross-section of a location notch

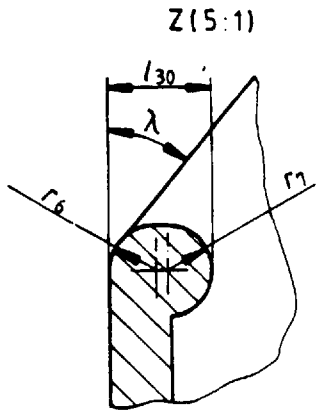

Figure 10 - Cross-section of a detail of the opening of case

Copyright International Organization for Standardization
Provided by IHS under license with ISO
No reproduction or networking permitted without license from IHS
Not for Resale

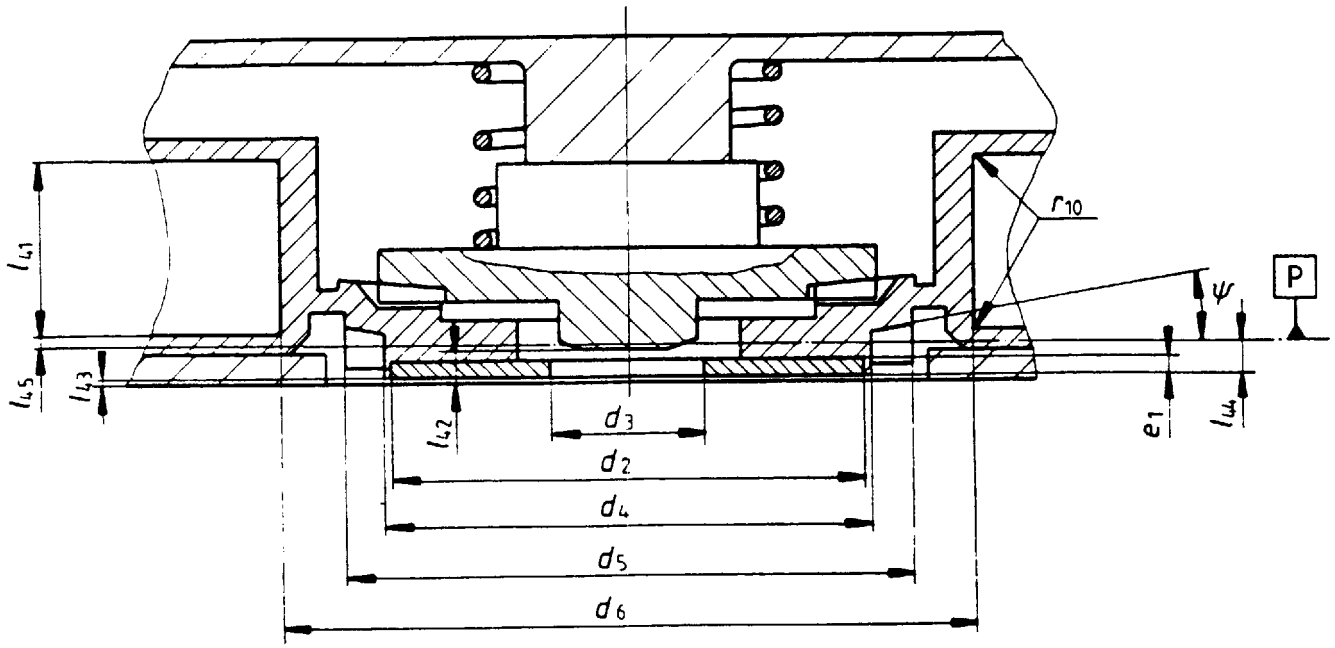

Figure 11 - Cross-section of the cartridge in hand

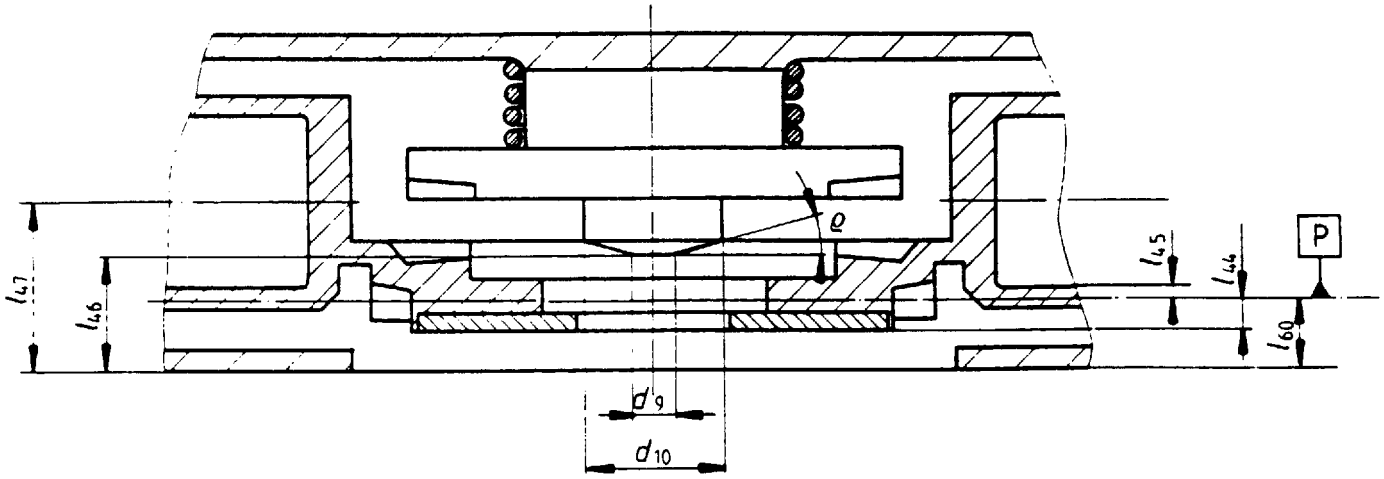

Figure 12 - Cross-section of the cartridge in the drive

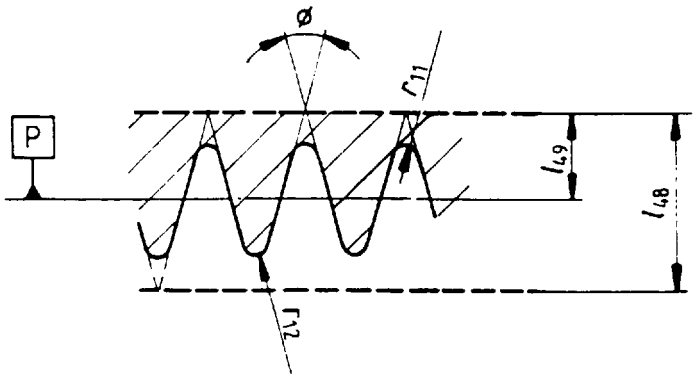

Figure 13 - Teeth of the toothed rim

Copyright International Organization for Standardization
Provided by IHS under license with ISO
No reproduction or networking permitted without license from IHS
Not for Resale

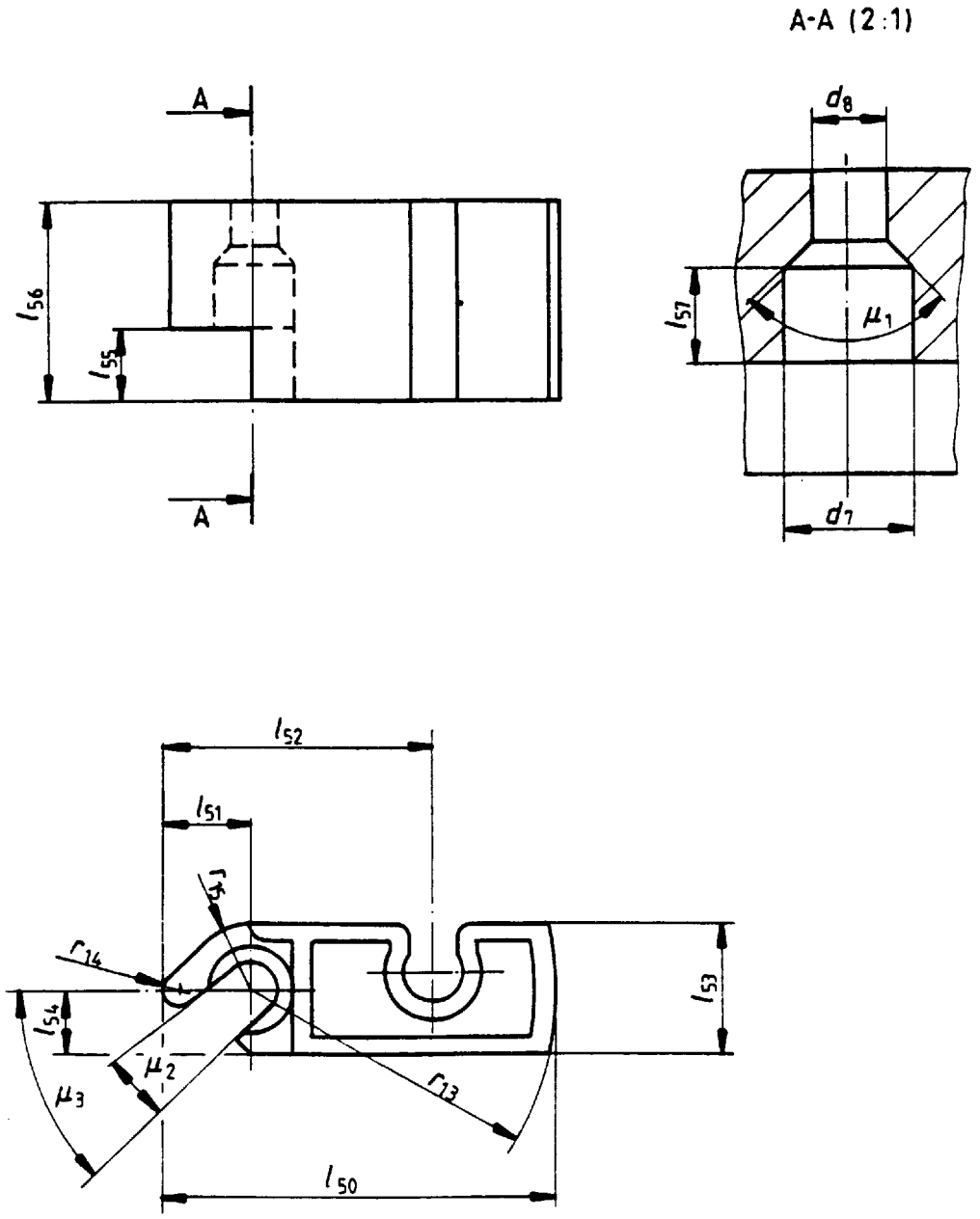

Figure 14 - Cross-section of leader block

Copyright International Organization for Standardization
Provided by IHS under license with ISO
No reproduction or networking permitted without license from IHS
Not for Resale

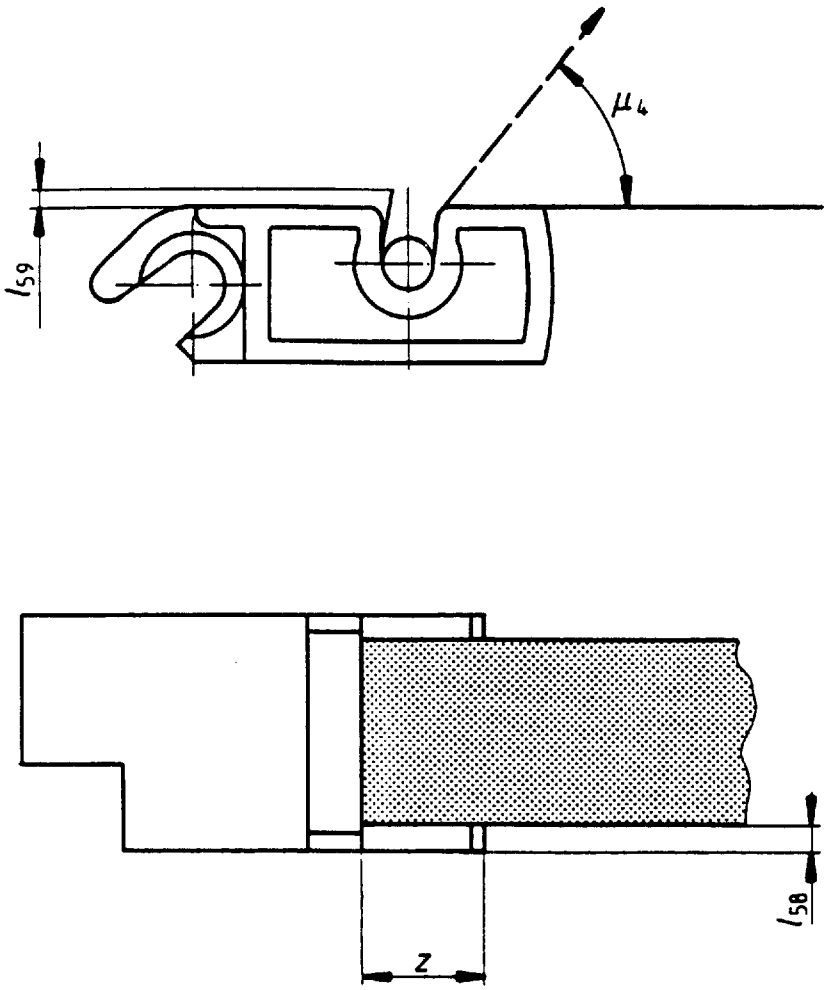

Figure 15 - Fixation of tape to leader block

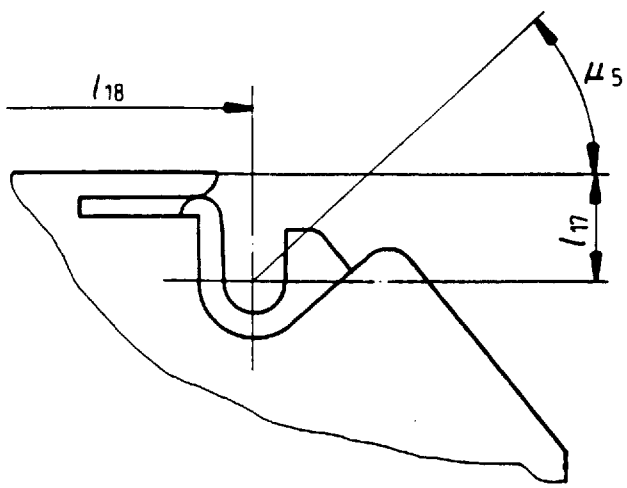

Figure 16 - Leader block in case

Copyright International Organization for Standardization
Provided by IHS under license with ISO
No reproduction or networking permitted without license from IHS
Not for Resale

Section 4 - Recording method and formats

9 Method of recording

The method of recording shall be

- a ZERO is represented by a flux transition at the beginning of a bit cell followed by a flux transition at the centre of the bit cell;
- a ONE is represented by a flux transition at the beginning of a bit cell.

9.1 Physical recording density

The physical recording density shall be:

- for all ZEROs: 1 944 ftpmm
- for all ONEs : 972 ftpmm

9.2 Bit cell length

The resulting nominal bit cell length is 1,029 µm.

9.3 Average bit cell length

The average bit cell length shall be the sum of n bit cell lengths divided by n.

9.4 Long-term average bit cell length

The long-term average bit cell length shall be the average bit cell length taken over a minimum of 972 000 bit cells. The long-term average bit cell length shall be within ± 4% of the nominal bit cell length.

9.5 Short-term average bit cell length (STA)

The short-term average bit cell length shall be the average taken over 16 bit cells. The short-term average bit cell length shall be within ± 7 % of the nominal bit cell length.

9.6 Rate of change

The rate of change of the STA shall not exceed 1,6 %.

$$\left| \frac{STA_n}{16\ bits} \right| \left| \frac{STA_{n+1}}{16\ bits} \right|$$

$$100 \times \frac{|STA_n - STA_{n+1}|}{STA_n} \leq 1{,}6\,\%$$

9.7 Bit shift

The maximum displacement of any ONEs zero crossing, exclusive of missing pulses, shall not deviate by more than 28 % from the expected nominal position as defined by the average bit cell length. See annex G for the test procedure.

Copyright International Organization for Standardization
Provided by IHS under license with ISO
No reproduction or networking permitted without license from IHS
Not for Resale

9.8 Total character skew

No bit belonging to the same written transverse column shall be displaced by more than 19 bit cell lengths when measured in a direction parallel to the Reference Edge (see 10.2) of the tape.

9.9 Read signal amplitude

The average signal amplitude of an interchanged cartridge averaged over 4 000 flux transitions at 972 ftpmm shall be between 60 % and 150 % of the Standard Reference Amplitude. Averaging for the interchanged cartridge may be segmented into blocks.

Traceability to the Standard Reference Amplitude is provided by the calibration factors supplied with each Secondary Standard Reference Tape.

9.10 Coincident missing pulse zones

No block shall be recorded over a coincident missing pulse zone. Such a zone shall be erased as specified in 13.4.

10 Track format

10.1 Number of tracks

There shall be 18 tracks.

10.2 Reference edge

The reference edge of the tape is its bottom edge when viewing the recording surface of the tape with the hub end of the tape to the observer's right (see 13.8.2).

10.3 Track positions

The distance from the centrelines of the tracks to the reference edge shall be

Track 1	: 11,68 mm
Track 2	: 11,05 mm
Track 3	: 10,42 mm
Track 4	: 9,79 mm
Track 5	: 9,16 mm
Track 6	: 8,53 mm
Track 7	: 7,90 mm
Track 8	: 7,27 mm
Track 9	: 6,64 mm
Track 10	: 6,01 mm
Track 11	: 5,38 mm
Track 12	: 4,75 mm
Track 13	: 4,12 mm
Track 14	: 3,49 mm
Track 15	: 2,86 mm
Track 16	: 2,23 mm
Track 17	: 1,60 mm
Track 18	: 0,97 mm

The tolerance shall be ± 0,04 mm for all tracks.

10.4 Track width

The width of a written track shall be 0,540 mm ± 0,017 mm.

Copyright International Organization for Standardization
Provided by IHS under license with ISO
No reproduction or networking permitted without license from IHS
Not for Resale

10.5 Azimuth

On any track the angle that a flux transition across the track makes with a line perpendicular to the Reference Edge shall not be greater than 3' of arc.

Note 7 - At the time of writing the tape, the azimuth should be less than 1' of arc. The remaining 2' of arc is the allowance for tape distortion caused by environmental conditions and ageing.

11 Packet format

11.1 Packet elements (figure 16)

A packet shall consist of

Packet ID
UDR
Packet Trailer

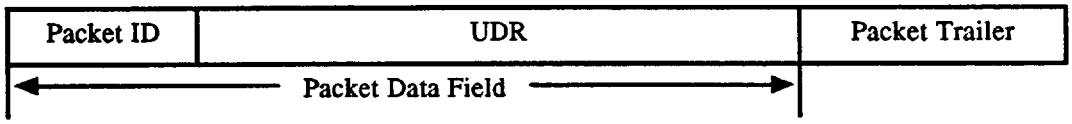

Figure 17 - Packet format

11.2 Packet ID

The Packet ID shall consist of 32 bytes numbered 1 to 32. The Packet ID shall not be processed.

Bytes 1 to 6 constitute the Packet Block-ID.

Byte 1 shall be set to 10000000

Byte 2

- Bit 1 shall be set to ZERO
- Bits 2 to 8 shall express, in binary notation, the value of the Physical Position Indicator at that point along the tape.
  See annex K for the method of calculation.

Bytes 3 to 6 shall express, in binary notation, the UDR identification. The count shall be set to 0 for the first data block or Tape Mark following the initial interblock gap.

It shall be increased by 1 for each UDR and each Tape Mark. It shall not be increased for TCRs (see 13.9).

Bytes 7 to 10 shall express, in binary notation, a value equal to the total number of data bytes in the Packet Data Field, minus 1.

Byte 11 shall express, in binary notation, a value equal to the number of the bytes in the Packet Trailer. The sum of Bytes 7 to 10 and Byte 11 shall be equal to the total number of bytes in the packet, minus 1.

Byte 12

- Bit 1 when set to ZERO, shall indicate that this packet is not the last packet of the data block,
  when set to ONE shall indicate that this packet is the last packet of the data block.
- Bit 2 when set to ZERO, shall indicate that the data has not been processed,
  when set to ONE shall indicate that the data has been processed.

Copyright International Organization for Standardization
Provided by IHS under license with ISO
No reproduction or networking permitted without license from IHS
Not for Resale

Bits 3 to 8 shall be all ZEROs.

Byte 13 when bit 2 of Byte 12 is set to ZERO, Byte 13 shall be set to all ZEROs,

when this bit 2 is set to ONE, Byte 13 shall contain in binary notation the identification of the algorithm used to process the UDR data.

Note 8 - Cartridges that were written prior to the registration of compression algorithms may have an identifier set to 0 instead of the registered integer value for the algorithm that was applied when the cartridge was actually written.

Bytes 14 to 30 shall be set to all ZEROs.

Bytes 31 and 32 shall contain CRC Byte 1 and CRC Byte 2, respectively, computed sequentially over the previous 30 bytes, as described in annex J.

The data from the Packet ID bytes shall be inverted before processing in the CRC generator. The bits in the CRC character shall be inverted before appending to the first 30 bytes of the Packet ID.

11.3 UDR

The UDR shall contain either all processed data, or all unprocessed data, as indicated by Byte 12, bit 2 of the Packet ID.

11.4 Packet Trailer

There are two forms of Packet Trailer; one form is used in packets containing processed data, and the other in packets containing unprocessed data. Packet Trailer bytes shall not be processed.

11.4.1 Packet Trailer when data has been processed

The Packet Trailer shall be 10 to 41 bytes in length.

Bytes 1 to 4 shall express, in binary notation, a count of the number of bytes from the LDR in the packet, (i.e. before processing).

Bytes 5 and 6 shall contain CRC Byte 1 and CRC Byte 2, respectively, computed sequentially over the bytes from the LDR in the packet, (i.e. before processing), as described in annex J.

Bytes 7 and 8 shall contain CRC Byte 1 and CRC Byte 2, respectively, computed sequentially over the bytes from the UDR in the packet (i.e. after processing), and the first six bytes of the Packet Trailer, as described in annex J.

Pad Bytes A sufficient number of Pad Bytes, in the range 0 to 31, shall be added to the Packet Trailer such that the entire packet consists of an integral multiple of 32 bytes.

Packet Trailer CRC Bytes

The penultimate and ultimate bytes of the Packet Trailer shall contain CRC Byte 1 and CRC Byte 2, respectively, computed sequentially over the bytes from the UDR (i.e. after processing), and the preceding bytes in the Packet Trailer, as described in annex J.

The input shall be inverted before processing in the CRC generator. The bits in the CRC character shall be inverted before appending to the rest of the bytes of the Packet Trailer.

11.4.2 Packet Trailer when data has not been processed

The Packet Trailer shall be 2 to 33 bytes in length.

Pad Bytes There shall be 0 to 31 Pad bytes such that the entire packet consists of an integral multiple of 32 bytes.

Copyright International Organization for Standardization
Provided by IHS under license with ISO
No reproduction or networking permitted without license from IHS
Not for Resale

Packet Trailer CRC bytes

The penultimate and ultimate bytes of the Packet Trailer shall contain CRC Byte 1 and CRC Byte 2, respectively, computed sequentially over the bytes from the LDR in the Packet, and the preceding Pad bytes in the Packet Trailer, as described in annex J.

The input shall be inverted before processing in the CRC generator. The bits in the CRC character shall be inverted before appending to the rest of the bytes of the Packet Trailer.

12 Data Block format

12.1 Data Part (figure 17)

The Data Part of a Data Block shall consist of one or more packets, sequentially appended, followed by a Count Field and the Block-ID.

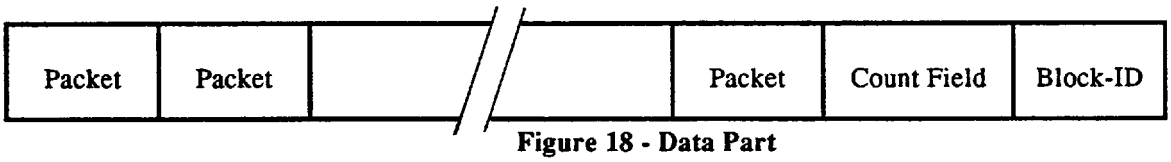

Figure 18 - Data Part

The total number of bytes, after processing, in the packets shall not exceed 102 400 bytes. The process of appending packets shall be terminated if a Tape Mark (see 13.5) is to be written or if no more packets are available. It may also be terminated for any other appropriate reason.

If a single packet exceeds 102 400 bytes the data shall be written in the format defined in ISO 9661.

The bytes of this Data Part are termed Data Bytes and comprise Packet Bytes, Count Field Bytes and Block-ID Bytes.

12.1.1 Packet Bytes

Packet Bytes comprise UDR Bytes, Packet-ID Bytes and Packet Trailer Bytes.

12.1.2 Count Field Bytes

The Count Field shall comprise 6 bytes. These bytes shall follow the last Packet Trailer Byte.

Bytes 1 and 2 shall contain, in binary notation, a value equal to the number of packets contained in the Data Block.

Bytes 3 to 6 shall contain, in binary notation, a value calculated before processing as follows: for each LDR in the Data Block a sub-total shall be computed by dividing the number of bytes by 32 and adding 1 if there is a remainder. The sum of these sub-totals shall be the value recorded in these bytes.

12.1.3 Block-ID Bytes

The Block-ID shall comprise 4 bytes. These bytes shall follow the Count Field Bytes. The bits shall be numbered from 1 (most significant) to 32 (least significant).

Bit 1 shall be set to ZERO.

Bits 2 to 8 shall express, in binary notation, the value of the Physical Position Indicator at that point along the tape. See annex K for the method of calculation.

Bit 9 shall be set to ONE.

Bit 10 shall be set to ZERO.

Bits 11 to 32 shall express, in binary notation, the same count that is contained in a Packet Block-ID for the first Packet in the Data Block (see 11.2, Bytes 3 to 6).

Copyright International Organization for Standardization
Provided by IHS under license with ISO
No reproduction or networking permitted without license from IHS
Not for Resale

These 32 bits shall be assigned to the positions shown in figure 19:

Byte sequence	1	2	3	4
Bits	1 to 8	9 to 16	17 to 24	25 to 32

Figure 19 - Block-ID Bytes

12.2 Allocation of Data Bytes to frames

The Data Bytes shall be arranged in groups, called frames, completed with check characters. These frames shall, in turn, be arranged in a given sequence together with additional groups of bytes having prescribed bit patterns. The Data Bytes arranged in this manner and additional bytes shall then be recorded on the tape according to a specific coding scheme (see 12.4).

A frame shall be a section across all 18 tracks which contains logically related 8-bit bytes, one byte per track. Each byte in a frame is recorded along a track (see figure 20).

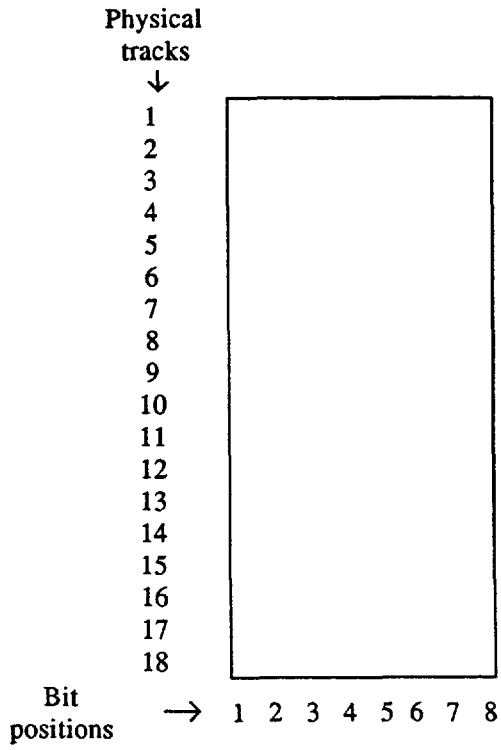

Figure 20 - Frame

There are four types of frame:

Prefix Frames
Data Frames
Residual Frames
Suffix Frames

The following types of byte are used in frames:

Data Bytes
Pad Bytes
Residual Bytes
Diagonal Redundancy Check Bytes

Copyright International Organization for Standardization
Provided by IHS under license with ISO
No reproduction or networking permitted without license from IHS
Not for Resale

Vertical Redundancy Check Bytes
CRC Bytes

A Data Block shall have the structure shown in figure 21:

Prefix	the first two frames
Data Frames	up to 7 314 frames grouped in clusters
Residual Frames	Residual Frame 1 and Residual Frame 2, or Residual Frame 2 only
Suffix	the last two frames

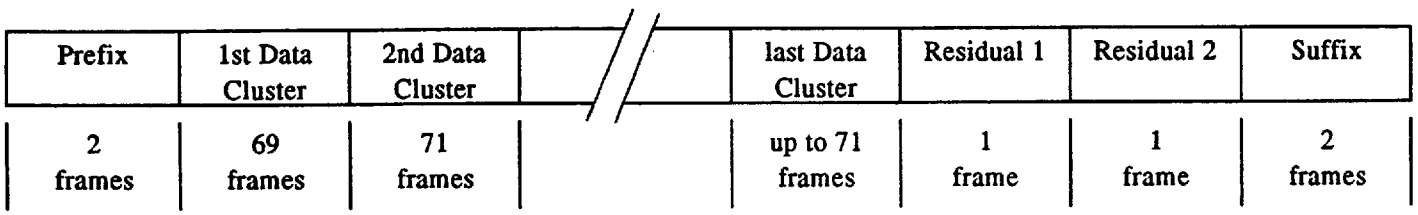

Figure 21 - Data Block

12.2.1 Prefix Frames

The prefix shall consist of two frames containing Pad Bytes in each track.

12.2.2 Data Frames (figure 22)

Each Data Frame shall consist of

- the first 7 Data Bytes recorded in odd tracks 1 to 13,
- the next 7 Data Bytes recorded in even tracks 2 to 14,
- a Diagonal Redundancy Check Byte (DRC-A) recorded in track 15 (see 12.3.1 and 12.3.3),
- a Vertical Redundancy Check Byte (VRC-A) recorded in track 17 (see 12.3.2 and 12.3.3),
- a Diagonal Redundancy Check Byte (DRC-B) recorded in track 16 (see 12.3.1 and 12.3.3),
- a Vertical Redundancy Check Byte (VRC-B) recorded in track 18 (see 12.3.2 and 12.3.3).

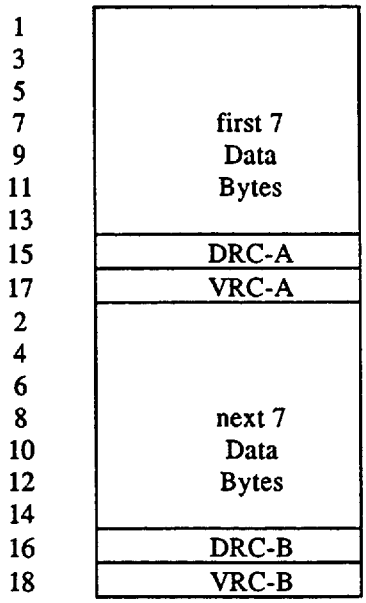

Figure 22 - Data Frame

The Data Frames are grouped in clusters as follows:

- the first cluster shall contain up to 69 frames of Data Bytes,
- the next clusters, if provided, shall contain 71 frames of Data Bytes,
- the last cluster shall contain up to 71 frames of Data Bytes.

Copyright International Organization for Standardization
Provided by IHS under license with ISO
No reproduction or networking permitted without license from IHS
Not for Resale

12.2.3 Residual Frame 1 (figure 23)

If after the Data Frame of the last Data cluster 12 or 13 Data Bytes remain to be recorded, there shall be a Residual Frame 1. If the number of remaining Data Bytes is less than 12 there shall be no Residual Frame 1.

The structure of the Residual Frame 1 shall be

- 12 or 13 Data Bytes;
- 1 or 2 additional Pad Bytes, depending on the number of remaining Data Bytes;
- in tracks 15 and 17 the DRC-A and the VRC-A, respectively;
- in tracks 16 and 18 the DRC-B and the VRC-B, respectively.

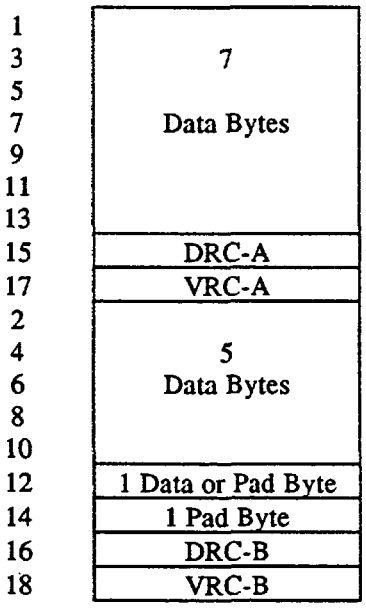

Figure 23 - Residual Frame 1

12.2.4 Residual Frame 2 (figure 24)

If there is no Residual Frame 1, i.e. if there are eleven or less remaining Data Bytes, these Data Bytes followed by sufficient additional Pad Bytes to total 11 bytes shall be recorded in odd tracks 1 to 13 and even tracks 2 to 8.

If there is a Residual Frame 1, odd tracks 1 to 13 and even tracks 2 to 8 shall be recorded with additional Pad Bytes.

In either case

- track 10 shall be recorded with the Residual Byte (see 12.2.4.1);
- tracks 12 and 14 with the CRC Byte 1 and the CRC Byte 2, respectively (see 12.2.4.2);
- tracks 15 and 17 with the DRC-A and the VRC-A, respectively;
- Tracks 16 and 18 with the DCR-B and the VRC-B, respectively.

Copyright International Organization for Standardization
Provided by IHS under license with ISO
No reproduction or networking permitted without license from IHS
Not for Resale

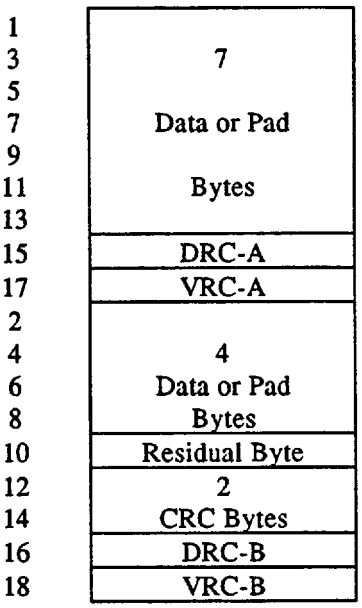

Figure 24 - Residual Frame 2

12.2.4.1 Residual Byte

The Residual Byte shall be recorded in track 10 of the Residual Frame 2. Its bits are numbered from 1 (most significant) to 8 (least significant).

Bits 1 and 2 shall be unspecified, they can be a ONE or a ZERO.

Bits 3 and 4 shall be ONEs.

Bits 5 to 8 shall express in binary notation the total number of additional Pad Bytes in the Residual Frame(s).

12.2.4.2 Cyclic Redundancy Check Character (CRC)

Tracks 12 and 14 of the Residual Frame 2 shall contain CRC Byte 1 and CRC Byte 2, respectively, computed sequentially over the Data Bytes, the additional Pad Bytes and the Residual Byte, as described in annex J.

This does not include the ECC Bytes (see 12.3).

12.2.4.3 Summary of requirements for Residual Frames

Table 4 summarizes the requirements for Residual Frame 1 and Residual Frame 2.

Copyright International Organization for Standardization
Provided by IHS under license with ISO
No reproduction or networking permitted without license from IHS
Not for Resale

Table 4 - Requirements for Residual Frames

Number of Data Bytes remaining after the last complete Data Frame			Residual Frame 1				Residual Frame 2					
Packet Bytes	Count Field Bytes	Block -ID Bytes	Packet Bytes	Count Field Bytes	Block -ID Bytes	Add. Pad Bytes	Packet Bytes	Count Field Bytes	Block -ID Bytes	Add. Pad Bytes	Resid. Bytes	CRC Bytes
0	0	0	No Residual Frame 1				0	0	0	11	1	2
0	0	1					0	0	1	10	1	2
0	0	2					0	0	2	9	1	2
0	0	3					0	0	3	8	1	2
0	0	4					0	0	4	7	1	2
0	1	4					0	1	4	6	1	2
0	2	4					0	2	4	5	1	2
0	3	4					0	3	4	4	1	2
0	4	4					0	4	4	3	1	2
0	5	4					0	5	4	2	1	2
0	6	4					0	6	4	1	1	2
1	6	4					1	6	4	0	1	2
2	6	4	2	6	4	2	0	0	0	11	1	2
3	6	4	3	6	4	1	0	0	0	11	1	2

12.2.5 Suffix Frames

The Suffix shall consist of two frames containing

- in odd tracks 1 to 13 : additional Pad Bytes
- in track 15 : DRC-A
- in track 17 : VRC-A
- in even tracks 2 to 14 : additional Pad Bytes
- in track 16 : DRC-B
- in track 18 : VRC-B

12.3 Error Correcting Code (ECC)

The Error Correcting Code yields check bits

- the Diagonal Redundancy Check (DRC)
- the Vertical Redundancy Check (VRC).

Computation of the DRCs and VRCs starts with the Prefix and ends with the Suffix.

In 12.3.1 and 12.3.2 the following notation is used:

Tn_m = the mth bit of the nth track

Copyright International Organization for Standardization
Provided by IHS under license with ISO
No reproduction or networking permitted without license from IHS
Not for Resale

12.3.1 Diagonal Redundancy Check (DRC)

The two DRCs shall be recorded in tracks 15 and 16, respectively. The bits in each of these tracks shall be computed from the bits in all other tracks, except tracks 17 and 18. The *m*th bit in each of these tracks is specified by:

$$m\text{th bit of track 15} = \left\{ \sum_{n=0}^{6} T(2n+1)_{m-n-1} + \sum_{n=1}^{8} T(2n)_{m-n-7} \right\} \quad \text{(modulo 2)}$$

$$m\text{th bit of track 16} = \left\{ \sum_{n=0}^{6} T(2n+1)_{m+n-14} + T(15)_{m-15} + \sum_{n=1}^{7} T(2n)_{m+n-8} \right\} \text{(modulo 2)}$$

12.3.2 Vertical Redundancy Check (VRC)

The two VRCs shall be recorded in tracks 17 and 18, respectively. The bits in each of these tracks shall be computed from the bits of the eight other tracks having the same index parity. The *m*th bit in each of these tracks is specified by

$$m\text{th bit of track 17} = \left\{ \sum_{n=0}^{7} T(2n+1)_m \right\} \quad \text{(modulo 2)}$$

$$m\text{th bit of track 18} = \left\{ \sum_{n=1}^{8} T(2n)_m \right\} \quad \text{(modulo 2)}$$

12.3.3 ECC Format

In each frame the eight bits of each DRC and each VRC shall be considered as 8-bit Check Bytes.

Copyright International Organization for Standardization
Provided by IHS under license with ISO
No reproduction or networking permitted without license from IHS
Not for Resale

12.3.4 Summary of ECC[1)]

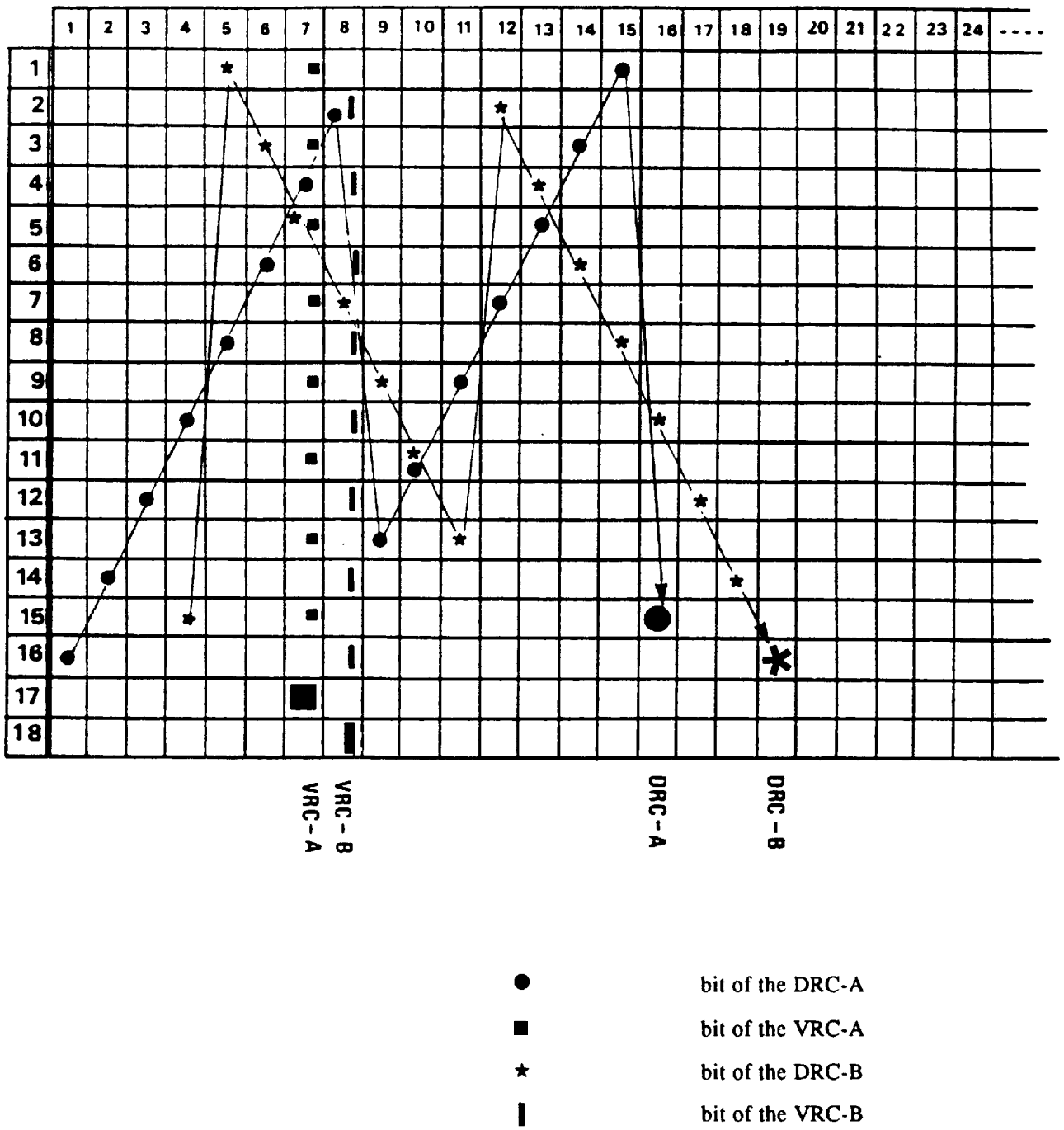

Figure 25 - Summary of Error Correction Code

1) Note 9 -For a complete description of this ECC schema, see A.M. PATEL: *Adaptive cross parity (AXP) code for a high-density magnetic tape subsystem, in IBM Journal of Research and Development*, Vol. 29, Number 6 of November 1985.

Copyright International Organization for Standardization
Provided by IHS under license with ISO
No reproduction or networking permitted without license from IHS
Not for Resale

12.4 Recording of 8-bit bytes on the tape

Each 8-bit byte, including the ECC bytes, in the Prefix, in the Data Frames, in the Residual Frame(s) and in the Suffix shall be represented by a 9-bit pattern on the tape.

Annex F specifies the 9-bit pattern representing each 8-bit byte. The bit of the 9-bit pattern in the leftmost bit position shall be recorded first (i.e. nearest to BOT).

12.5 Recorded Data Block

When recorded on the tape each Data Block shall have the structure prescribed in figure 26 and be called a Recorded Data Block.

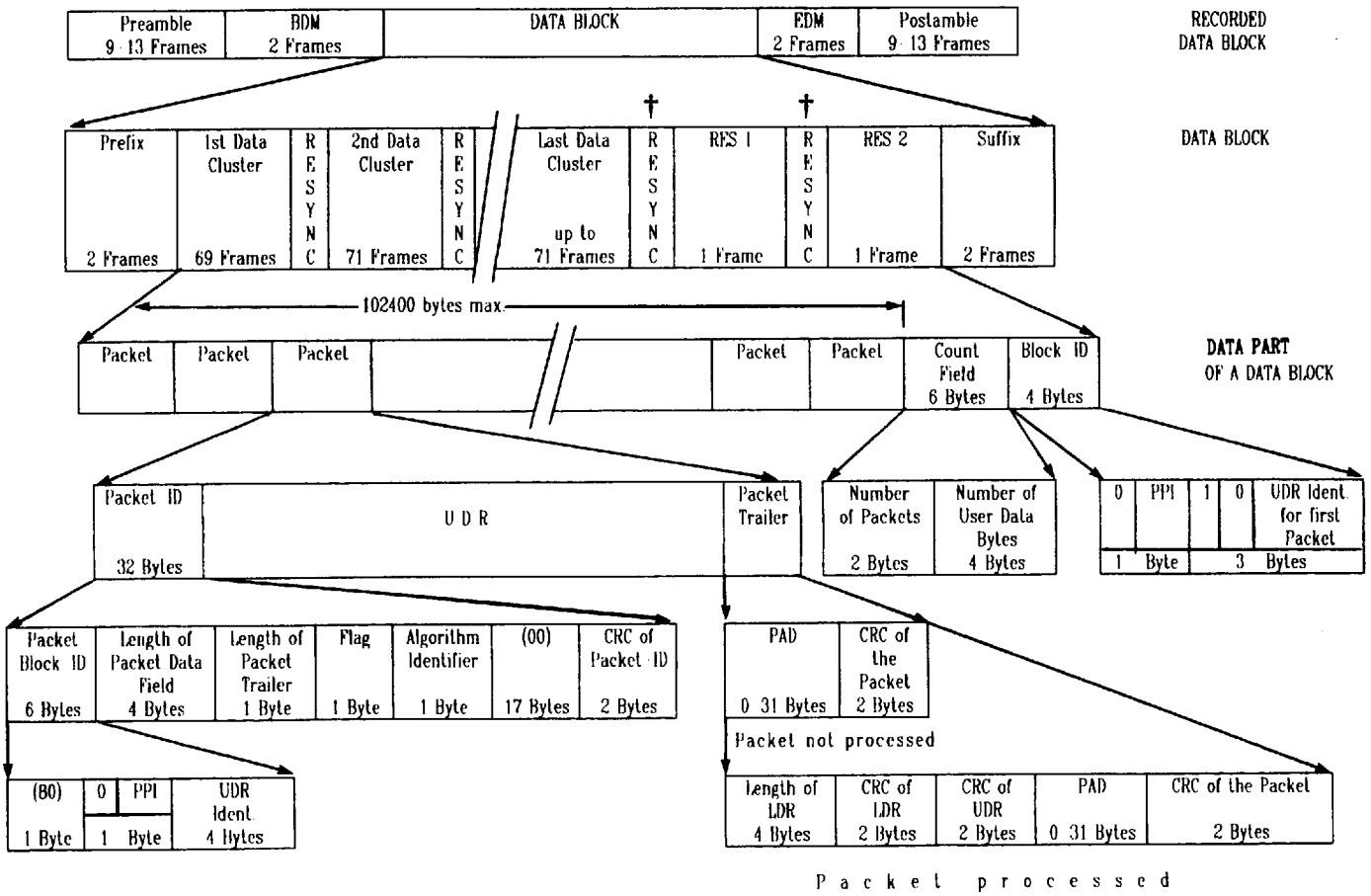

Figure 26 - Recorded Data Block

† The presence of this Resync Control Block depends on the number of preceding frames (see 12.5.3).

12.5.1 Preamble

The Preamble shall consist of between 9 and 13 frames recorded with the 9-bit pattern 111111111 in all tracks.

Copyright International Organization for Standardization
Provided by IHS under license with ISO
No reproduction or networking permitted without license from IHS
Not for Resale

12.5.2 Beginning of Data Mark (BDM)

The BDM shall consist of two frames recorded with the 9-bit pattern 100010001 in all tracks.

12.5.3 Resync Control Frame

A Resync Control Frame shall have the 9-bit pattern 100010001 in all tracks. A Resync Control Frame shall be recorded after each 71 frames of the Data Block starting with the Prefix frames. If the Resync Control Frame would immediately precede the EDM, it shall not be recorded.

12.5.4 End of Data Mark (EDM)

The EDM shall consist of two frames recorded with the 9-bit pattern 100010001 in all tracks.

12.5.5 Postamble

The Postamble shall consist of between 9 and 13 frames recorded with the 9-bit pattern 111111111 in all tracks.

12.6 Data Density

Due to the ECC bytes, the 8-bit to 9-bit conversion and to the Resync Control Frames the maximum density of data bytes is

$$14 \times 972 \times \frac{1}{8} \times \frac{8}{9} \times \frac{71}{72} = 1\,491 \text{ data bytes per millimetre}$$

where

14	: the number of data bytes per frame,
972	: the number of flux transitions per mm for the all ONEs density,
1/8	: the inverse value of the number of bits per byte,
8/9	: corresponds to the recording scheme of 12.4,
71/72	: corresponds to the Resync Control Frames.

13 Tape format

The format of the tape is defined by the following control blocks separating and/or qualifying the Recorded Data Blocks:

- the Density Identification Burst;
- the ID Separator Burst;
- Interblock Gaps;
- Erase Gaps;
- Tape Marks.

In addition there are two Transform Change Records (see 13.9).

The five control blocks have the following recording characteristics (see figure 27):

a) The 18 tracks are divided into six zones:
- zone A : Tracks 1, 7, 13
- zone B : Tracks 2, 8, 14
- zone C : Tracks 3, 9, 15
- zone D : Tracks 4, 10, 16
- zone E : Tracks 5, 11, 17
- zone F : Tracks 6, 12, 18

Copyright International Organization for Standardization
Provided by IHS under license with ISO
No reproduction or networking permitted without license from IHS
Not for Resale

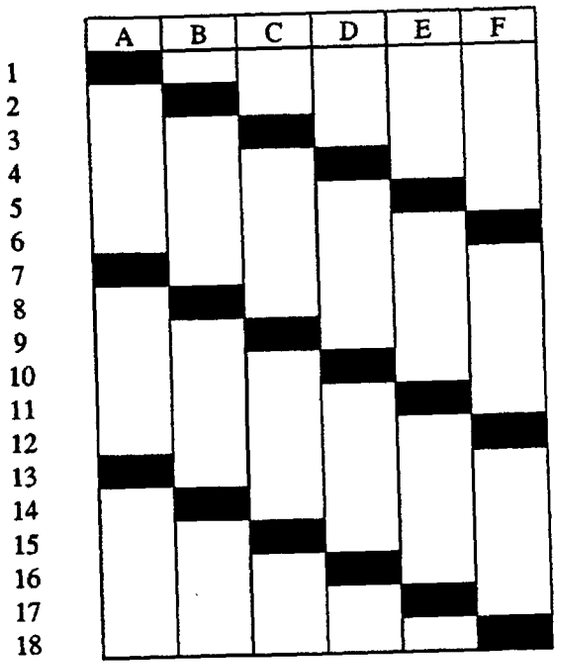

Figure 27 - Division of tracks in zones

b) The tracks of each zone are recorded either with the all ONEs pattern or with the repeated 6-bit pattern 100000 called tone.

13.1 Density Identification Burst

The Density Identification Burst shall be characterized by

- all ONEs in zones A, C, F
- tone in zones B, D, E

Its length shall be

nominal : 2 375 mm
minimum : 2 250 mm
maximum : 3 060 mm

The Density Identification Burst shall be the first recording on the tape.

13.2 ID Separator Burst

The ID Separator Burst shall be characterized by

- all ONEs in all zones.

Its length shall be

nominal : 2,0 mm
minimum : 1,9 mm
maximum : 2,1 mm

13.3 Interblock Gaps

The Interblock Gaps shall be characterized by

- all ONEs in zones A, D, F
- tone in zones B, C, E.

Copyright International Organization for Standardization
Provided by IHS under license with ISO
No reproduction or networking permitted without license from IHS
Not for Resale

The length of each Interblock Gap shall be

nominal : 2,0 mm
minimum : 1,6 mm
maximum : 3,0 mm

Any discontinuity across all tracks in an Interblock Gap (e.g. due to start/stop mode) shall not be greater than 0,03 mm. Such discontinuity shall not occur less than 0,5 mm before the Preamble of a Recorded Data Block or within 0,5 mm after the Postamble of such a block.

An Interblock Gap shall be recorded immediately after the ID Separator Burst. An Interblock Gap shall be recorded before and after each Recorded Data Block, each Erase Gap (see 13.4) and each Tape Mark (see 13.5), except after the last Tape Mark on the tape.

13.4 Erase Gaps

Erase Gaps shall be characterized by

- all ONEs in zones B, C, F
- tone in zones A, D, E.

Erase Gaps shall be recorded over a length of tape where an unsuccessful write operation occurred or upon an erase instruction.

13.4.1 Normal Erase Gaps

The length of a Normal Erase Gap shall be

nominal : 7,8 mm
minimum : 7,4 mm
maximum : 8,2 mm

Up to 20 successive Normal Erase Gaps, separated by Interblock Gaps, are permitted to be written to cover a defective area. A defective area is an area on the tape where the requirements of 7.19 are not met.

13.4.2 Elongated Erase Gaps

The length of an Elongated Erase Gap shall be

maximum : 200 mm

An Elongated Erase Gap shall be recorded when a Normal Erase Gap and/or the following Interblock Gap are not recognized as such. Within an Elongated Erase Gap partial Interblock Gaps of not more than 1 mm are permitted to appear.

13.5 Tape Marks

Tape Marks shall be characterized by

- all ONEs in zones B, D, E
- tone in zones A, C, F.

The length of each Tape Mark shall be

nominal : 1,0 mm
minimum : 0,7 mm
maximum : 1,3 mm

One or more Tape Marks may be used to delimit sequences of Recorded Data Blocks.

Copyright International Organization for Standardization
Provided by IHS under license with ISO
No reproduction or networking permitted without license from IHS
Not for Resale

13.6 Relationship between Interblock Gaps, Erase Gaps and Tape Marks

Where an Interblock Gap precedes or follows an Erase Gap or a Tape Mark, in six of the nine tracks the tone pattern of one of these control blocks shall extend into the ONE bits pattern of the other as specified below (see figure 28).

13.6.1 Interblock Gap followed by a Tape Mark

On tracks 1, 6, 7, 12, 13 and 18:

- 18 tone bits replace the last 18 ONE bits of the Interblock Gap.

On tracks 2, 5, 8, 11, 14 and 17:

- 18 tone bits replace the first 18 ONE bits of the Tape Mark.

13.6.2 Tape Mark followed by an Interblock Gap

On tracks 1, 6, 7, 12, 13 and 18:

- 18 tone bits replace the first 18 ONE bits of the Interblock Gap.

On tracks 2, 5, 8, 11, 14 and 17:

- 18 tone bits replace the last 18 ONE bits of the Tape Mark.

13.6.3 Interblock Gap followed by an Erase Gap

On tracks 1, 4, 7, 10, 13 and 16:

- 18 tone bits replace the last 18 ONE bits of the Interblock Gap.

On tracks 2, 3, 8, 9, 14 and 15:

- 18 tone bits replace the first 18 ONE bits of the Erase Gap.

13.6.4 Erase Gap followed by an Interblock Gap

On tracks 1, 4, 7, 10, 13 and 16:

- 18 tone bits replace the first 18 ONE bits of the Interblock Gap.

On tracks 2, 3, 8, 9, 14 and 15:

- 18 tone bits replace the last 18 ONE bits of the Erase Gap.

Copyright International Organization for Standardization
Provided by IHS under license with ISO
No reproduction or networking permitted without license from IHS
Not for Resale

13.6.5 Summary of the relationship between Interblock Gaps, Erase Gaps and Tape Marks

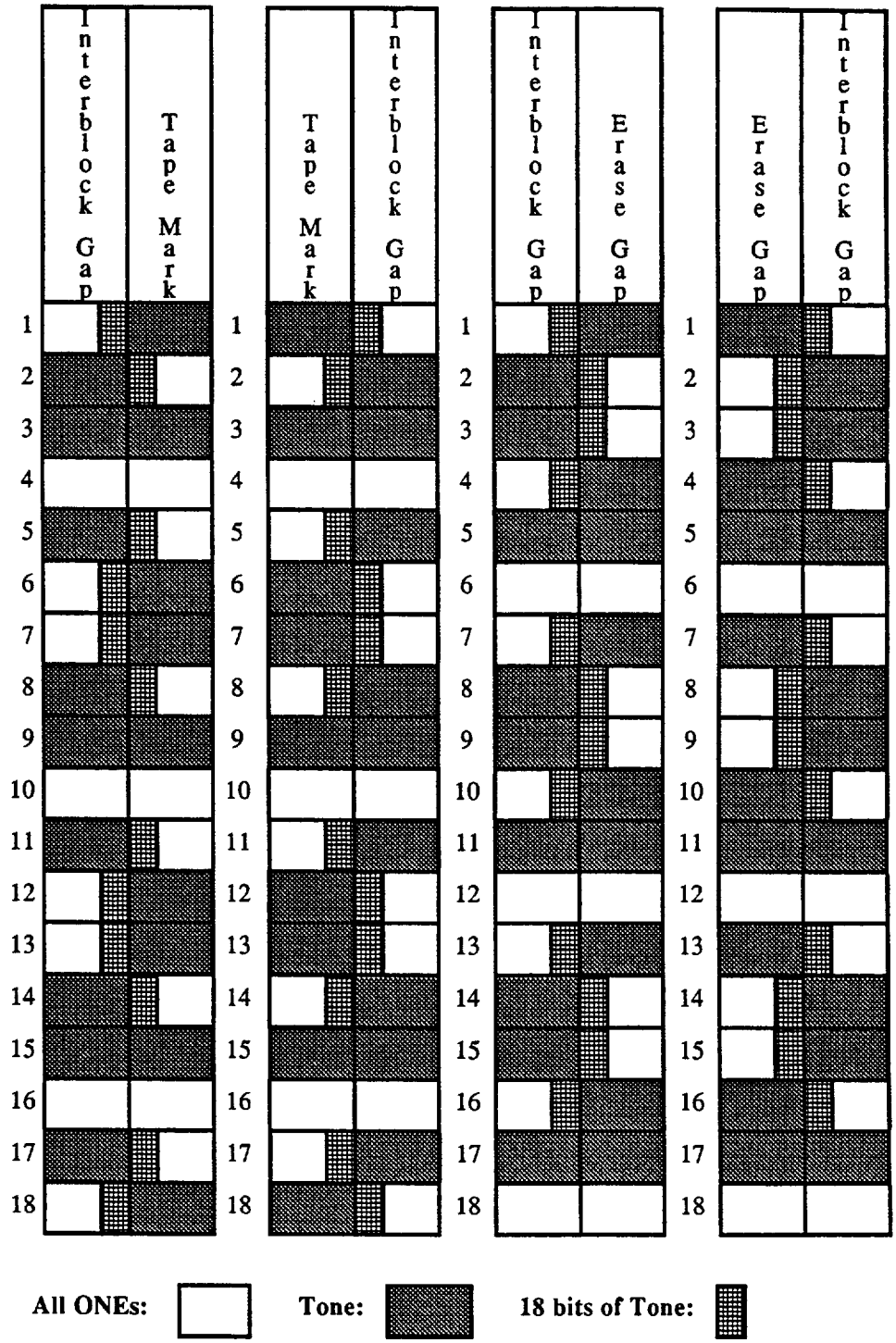

Figure 28 - Relationship between Gaps an Tape Marks

13.7 First and last recording on the tape

The first recording on the tape shall be a Density Identification Burst. It shall begin not more than 1,34 m from the leader block of the cartridge and end not less than 3,28 m from it.

The last recording on the tape shall end not less than 4,3 m from the junction of the tape to the hub of the cartridge.

Copyright International Organization for Standardization
Provided by IHS under license with ISO
No reproduction or networking permitted without license from IHS
Not for Resale

13.8 Summary of the tape format

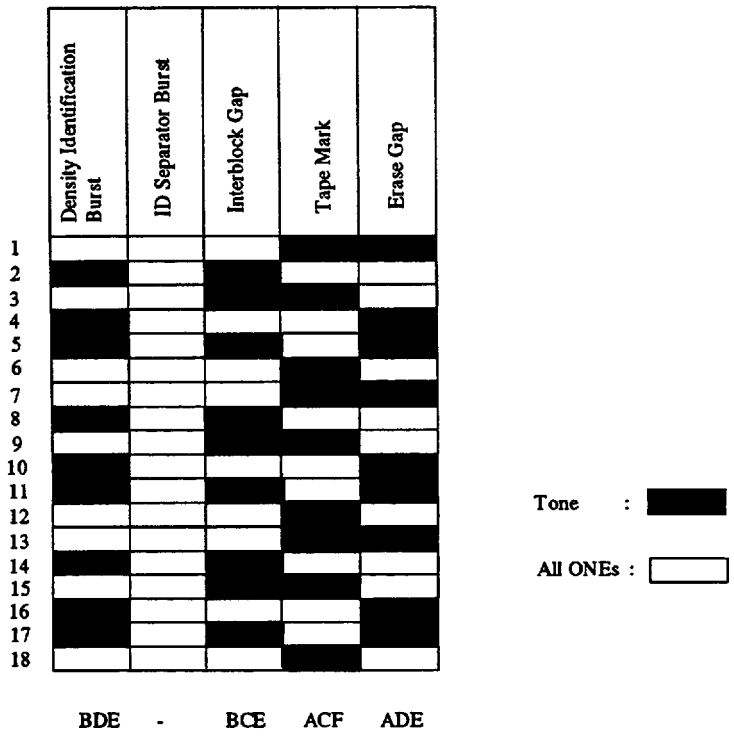

Figure 29 - Characteristics of recording other than Recorded Data Blocks

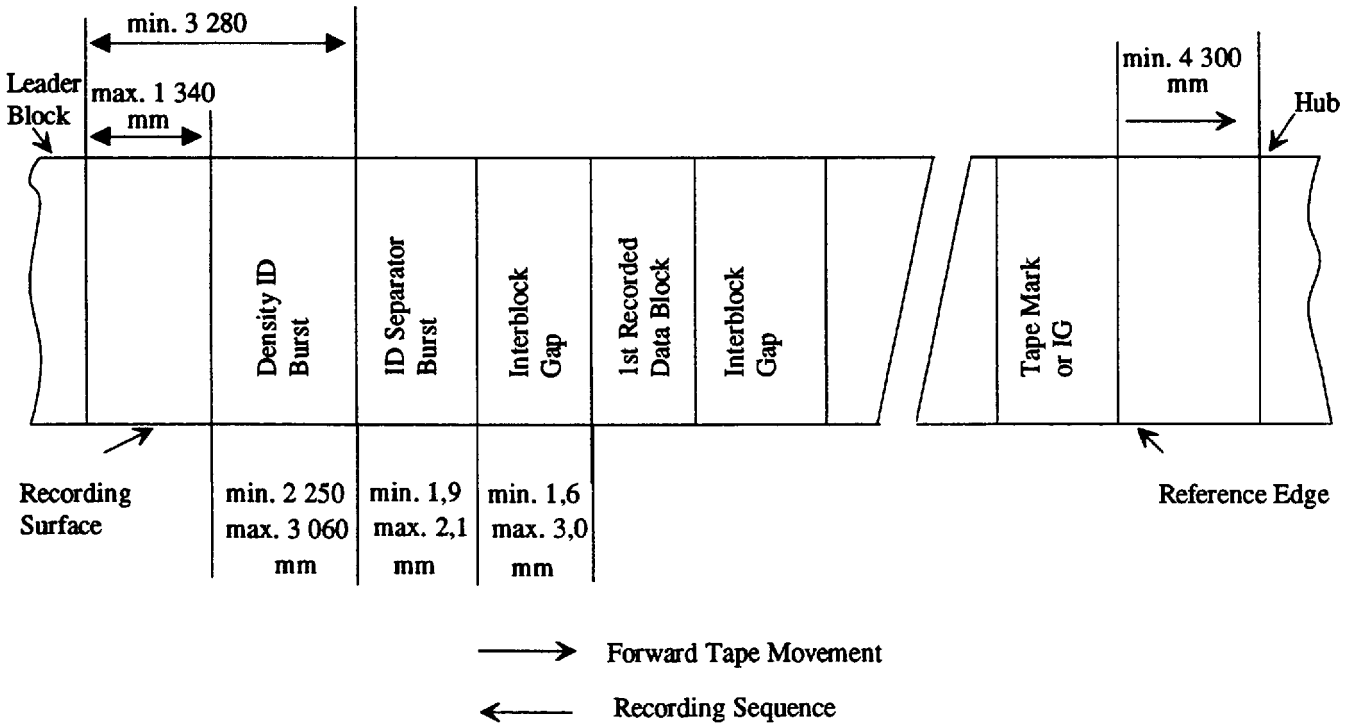

Figure 30 - Arrangement of recording on the tape

Copyright International Organization for Standardization
Provided by IHS under license with ISO
No reproduction or networking permitted without license from IHS
Not for Resale

13.9 Transform Change Records (TCRs)

These special data records allow Recorded Data Blocks written after transformation as defined in this International Standard to be intermixed with Recorded Data Blocks written as defined in ISO 9661.

A TCR1 shall be written to indicate, when the tape is moving in the forward direction, that the Recorded Data Blocks are changing from the format requirements of ISO 9661 to the format requirements of this International Standard.

A TCR2 shall be written to indicate, when the tape is moving in the forward direction, that the Recorded Data Blocks are changing from the format requirements of this International Standard to the format requirements of ISO 9661.

A TCR is not required after a Tape Mark. A TCR may be written at BOT to indicate which requirements are met by the first Recorded Data Block. It is not mandatory to write a TCR after a Tape Mark or at BOT.

TCRs shall be recorded on the tape according to the format requirements of ISO 9661.

The two TCRs shall each comprise 28 bytes and shall have identical content, except for Bytes 7 and 18, as follows:

Byte 1	shall be set to 11000000
Byte 2	shall express, in binary notation, the value of the Physical Position Indicator at that point along the tape. See annex K for the method of calculation.
Bytes 3 to 6	shall be set to all ZEROs.
Byte 7	shall be set to: all ONEs for TCR1 11111110 for TCR2
Bytes 8 to 14	shall be set to all ZEROs
Byte 15	shall have the same content as Byte 2
Bytes 16 and 17	shall be set to all ONEs
Byte 18	shall have the same content as Byte 7
Bytes 19 to 25	shall be set to all ZEROs
Byte 26	shall be set to 00110111
Bytes 27 to 28	shall contain CRC Byte 1 and CRC Byte 2, respectively, computed sequentially over the previous 26 bytes as described in annex J.

Copyright International Organization for Standardization
Provided by IHS under license with ISO
No reproduction or networking permitted without license from IHS
Not for Resale

--`,,,`-`-`,,`,,`,`,,`---
Copyright International Organization for Standardization
Provided by IHS under license with ISO
No reproduction or networking permitted without license from IHS
Not for Resale

Annex A

(informative)

Recommendations for transportation

A.1 Environment

It is recommended that during transportation the cartridges are kept within the following conditions:

A.1.1 Unrecorded cartridges

temperature	: -23 °C to 48 °C
relative humidity	: 5 % to 100 %
wet bulb temperature	: 26 °C max.
duration	: 10 consecutive days max.

There shall be no condensation in or on the cartridge.

A.1.2 Recorded cartridges

temperature	: 5 °C to 32 °C
relative humidity	: 5 % to 80 %
wet bulb temperature	: 26 °C max.

There shall be no condensation in or on the cartridge.

A.2 Hazards

Transportation of recorded cartridges involves three basic potential hazards.

A.2.1 Impact loads and vibration

The following recommendations should minimize damage during transportation.

a) Avoid mechanical loads that would distort the cartridge shape.

b) Avoid dropping the cartridge more than 1 m.

c) Cartridges should be fitted into a rigid box containing adequate shock-absorbent material.

d) The final box shall have a clean interior and a construction that provides sealing to prevent the ingress of dirt and water.

e) The orientation of the cartridges within the final box should be such that their axes are horizontal.

f) The final box should be clearly marked to indicate its correct orientation.

A.2.2 Extremes of temperature and humidity

a) Extreme changes in temperature and humidity should be avoided whenever possible.

b) Whenever a cartridge is received it should be conditioned in the operating environment for a period of at least 24 h.

Copyright International Organization for Standardization
Provided by IHS under license with ISO
No reproduction or networking permitted without license from IHS
Not for Resale

A.2.3 Effects of stray magnetic fields

A nominal spacing of not less than 80 mm should exist between the cartridge and the outer surface of the shipping container. This should minimize the risk of corruption.

Annex B

(informative)

Inhibitor tape

Any tape that reduces the performance of the tape drive or other tapes is called an inhibitor tape. Certain tape characteristics can contribute to poor tape drive performance. These characteristics include: high abrasiveness, high static friction to tape path components, poor edge conditions, excessive tape wear debris, interlayer slippage, transfer of oxide coating to the back of the next tape layer, separation of tape constituents causing deposits that may lead to tape sticking or poor performance of other tapes. Tapes that have these characteristics may not give satisfactory performance and can result in excessive errors.

Tapes to be used in this cartridge should not be inhibitor tapes.

Copyright International Organization for Standardization
Provided by IHS under license with ISO
No reproduction or networking permitted without license from IHS
Not for Resale

Annex C

(normative)

Tape abrasivity measurement procedure

C.1 General

Tape abrasivity is the tendency of the tape to wear the tape transport.

C.2 Test fixture

Install a clean ferrite wear bar made as shown in figure C.1 on a holding fixture similar to that shown in figure C.2. The test edge facing upward shall be unworn and free of chips or voids greater than 1 µm in size. The radius of the test edge shall not be greater than 13 µm.

The material of the ferrite bar shall be single-phase polycrystaline ferrite[1]. It shall have the following weight percentages:

ZnO	22%
NiO	11%
Fe_2O_3	67%

Its average grain size shall be 7,2 µm ± 2 µm. Its density shall not be less than 5,32 g/cm^3.

The surface finish on all four sides of the bar shall be at least of roughness grade N2 (ISO 1302).

C.3 Procedure

Install the test fixture (see clause C.2) on a tape transport so that the wrap angle of the tape over the bar is 8° on each side for 16° of total wrap.

Set the tape tension at the bar at 1,4 N.

With a tape speed of 1 m/s, make one pass of the tape over the wear bar. The length of tape passing over the wear bar shall be 520 m ± 2,5 m. This length may be segmented into the appropriate number of cartridges.

Remove the holding fixture from the transport and measure the length of the flat worn on the wear bar. This measurement is most easily made using a microscope of known magnification, a camera, and a reference reticule. A magnification of 300 × or higher is recommended.

Carry out the measurements across the 1/4, 1/2 and 3/4 points of the 12,65 mm width of the wear pattern. Take the average length calculated from the three readings. Figure C.3 shows a typical wear pattern and the points of measurements.

---

[1] Such material should be available as Sumitomo H4R or H4R3 which is the trade-name of a product supplied by Sumitomo Special Metals Div., Torrance California, USA. This information is given for the convenience of users of this International Standard and does not constitute an endorsement by ISO of the product named. Equivalent products may be used if they can be shown to lead to the same results.

Copyright International Organization for Standardization
Provided by IHS under license with ISO
No reproduction or networking permitted without license from IHS
Not for Resale

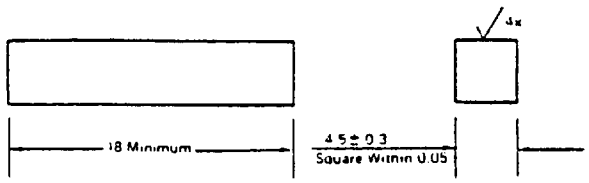

Figure C.1 - Ferrite Wear Bar

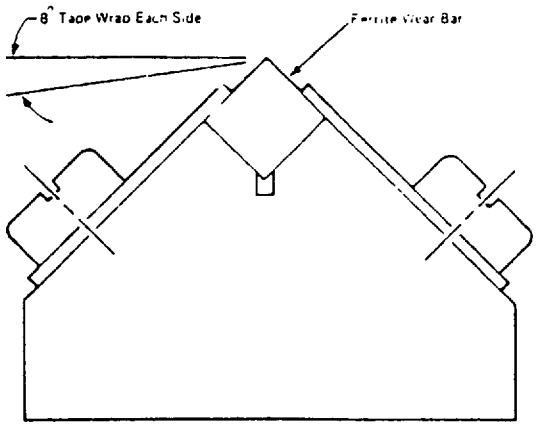

Figure C.2 - Wear Bar Holding Fixture

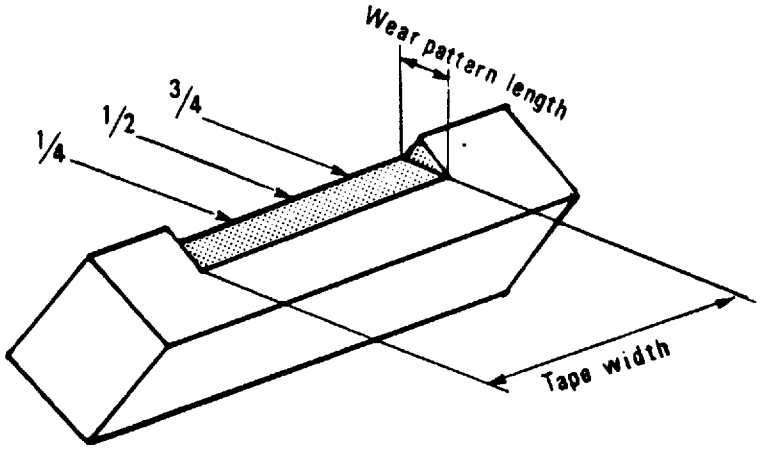

Figure C.3 - Typical Wear Pattern

Ferrite Bar following abrasivity test illustrating three locations for wear length measurement (the amount of wear is exaggerated for clarity).

Copyright International Organization for Standardization
Provided by IHS under license with ISO
No reproduction or networking permitted without license from IHS
Not for Resale

Annex D

(informative)

Recommendations on tape durability

When delivered from the supplier the tape of a new cartridge should meet the following requirements.

Testing and measurements performed on the cartridge using an appropriate drive are described below. The test shall be performed in the operating environment (see 6.2) for the tape and the tape drive.

D.1 Short-length durability/reliability

D.1.1 The short-length durability/reliability is the ability of the tape to withstand the wearing action encountered during repeated access to a short file of data. A permanent missing pulse is one that persists for ten consecutive read passes.

D.1.2 No permanent coincident missing pulse zones are permitted for a minimum of 40 000 read forward passes. In addition, no more than one permanent coincident missing pulse zone is permitted on the average for each 80 000 read forward passes.

D.1.3 Procedure

Ensure the tape drive is clean before starting this test.

As a test sample, use a minimum of four cartridges, written in the area of the tape free of coincident missing pulse zones. The area to be tested on each cartridge should start approximately 10 m, or 500 records of 25 000 bytes each, past the Density Identification Burst. The test area should consist of 1 m or 50 such records.

Each test cycle consists of starting at the beginning of the test area and accessing each record in the test area before returning to the beginning of the test area. For a complete test, 80 000 cycles should be made on each cartridge. Ten attempts to read forward should be made for each coincident missing pulse zone before a permanent coincident missing pulse zone is logged.

Tape path cleaning between passes is not permitted for this test.

D.2 Long-length durability/reliability

D.2.1 The long-length durability/reliability is the ability of the tape to resist the wearing action encountered while cycling full-length passes on a tape drive. This is not a test for end of life for the tape.

D.2.2 The cartridges should meet the following requirements:

a) The number of coincident missing pulse zones for the first 200 full length passes should not be more than 6 per 165 m of tape.

b) There should be no more than 12 coincident missing pulse zones on any single pass in any 165 m length of tape.

D.2.3 Procedure

Clean the tape drive before starting this test. Tape path cleaning between passes is not permitted for this test. The whole length of tape should be written continuously or with records of at least 16 000 bytes.

Copyright International Organization for Standardization
Provided by IHS under license with ISO
No reproduction or networking permitted without license from IHS
Not for Resale

Annex E

(normative)

Pre-recording condition

E.1 Explanation

The pre-recording condition is the remanent magnetic moment of the recording surface. The remanent magnetic moment is the magnetic moment of the recording surface in the absence of any magnetizing field. The maximum remanent magnetic moment of the recording surface is the remanent magnetic moment of the recording surface after subjecting the recording surface to a magnetizing field of 350 kA/m. The recording surface may have been subjected to a high magnetizing field, e.g. during manufacture, during testing, or by use on a magnetic recording system that leaves areas of surface that have been d.c. erased or contain low density transitions. As the resulting high magnetic moment can impair the operation of the recording system it is necessary to ensure that, before recording, the remanent state has been reduced to, at most, the level specified in 7.17.

E.2 Procedure

The magnetic moment shall be measured using a vibrating sample magnetometer (VSM), following these steps:

a) Cut a circular test piece of diameter 6 mm to 12 mm from the parent tape.

b) Identify the longitudinal (coating) direction of the test piece.

c) Mount the test piece on the VSM sample holder with the longitudinal direction aligned from pole to pole.

d) Centre the test piece between the poles in accordance with the VSM manufacturer's instructions.

Do not expose the test piece to any stray magnetic fields greater than 4 kA/m during preparation or mounting.

e) Measure the remanent magnetic moment of the test piece.

f) Rotate the sample 180° and repeat steps d) and e).

g) Cycle the test piece four times around the hysteresis loop using a peak field of 350 kA/m.

h) Measure the positive and negative values of maximum remanent magnetic moment.

9) Compare the ratio of values obtained in steps e) and h).

Copyright International Organization for Standardization
Provided by IHS under license with ISO
No reproduction or networking permitted without license from IHS
Not for Resale

Annex F

(normative)

Representation of 8-bit bytes by 9-bit patterns

The 8-bit bytes are shown with the most-significant bit to the left and the least significant bit to the right.

The 9-bit patterns are recorded with the leftmost bit first and the rightmost bit last.

8-bit byte	9-bit pattern	8-bit byte	9-bit pattern
00000000	011001011	00101000	101001011
00000001	011001001	00101001	001011001
00000010	001001101	00101010	001011010
00000011	101100011	00101011	001011011
00000100	011001010	00101100	101001010
00000101	101100101	00101101	001011101
00000110	101100110	00101110	001011110
00000111	101100111	00101111	001011111
00001000	011001111	00110000	011100011
00001001	101101001	00110001	001100011
00001010	101101010	00110010	001110010
00001011	101101011	00110011	001110011
00001100	011001110	00110100	010100011
00001101	101101101	00110101	001110101
00001110	101101110	00110110	001110110
00001111	101101111	00110111	001110111
00010000	001001011	00111000	111100011
00010001	001001001	00111001	001111001
00010010	011001101	00111010	001111010
00010011	100100011	00111011	001111011
00010100	001001010	00111100	110100011
00010101	100100101	00111101	001111101
00010110	100100110	00111110	001111110
00010111	100100111	00111111	001111111
00011000	001001111	01000000	010001011
00011001	100101001	01000001	010001001
00011010	100101010	01000010	010010010
00011011	100101011	01000011	010010011
00011100	001001110	01000100	010001010
00011101	100101101	01000101	010010101
00011110	100101110	01000110	010010110
00011111	100101111	01000111	010010111
00100000	101001111	01001000	010001111
00100001	101001101	01001001	010011001
00100010	001010010	01001010	010011010
00100011	001010011	01001011	010011011
00100100	101001110	01001100	010001110
00100101	001010101	01001101	010011101
00100110	001010110	01001110	010011110
00100111	001010111	01001111	010011111

Copyright International Organization for Standardization
Provided by IHS under license with ISO
No reproduction or networking permitted without license from IHS
Not for Resale

8-bit byte	9-bit pattern
01010000	011100101
01010001	001100101
01010010	010110010
01010011	010110011
01010100	010100101
01010101	010110101
01010110	010110110
01010111	010110111
01011000	111100101
01011001	010111001
01011010	010111010
01011011	010111011
01011100	110100101
01011101	010111101
01011110	010111110
01011111	010111111
01100000	011100110
01100001	001100110
01100010	011010010
01100011	011010011
01100100	010100110
01100101	011010101
01100110	011010110
01100111	011010111
01101000	111100110
01101001	011011001
01101010	011011010
01101011	011011011
01101100	110100110
01101101	011011101
01101110	011011110
01101111	011011111
01110000	011100111
01110001	001100111
01110010	011110010
01110011	011110011
01110100	010100111
01110101	011110101
01110110	011110110
01110111	011110111
01111000	111100111
01111001	011111001
01111010	011111010
01111011	011111011
01111100	110100111
01111101	011111101
01111110	011111110
01111111	011111111
10000000	111001011
10000001	111001001
10000010	100010010
10000011	100010011
10000100	111001010
10000101	100010101
10000110	100010110
10000111	100010111
10001000	111001111
10001001	100011001
10001010	100011010
10001011	100011011
10001100	111001110
10001101	100011101
10001110	100011110
10001111	100011111
10010000	011101001
10010001	001101001
10010010	100110010
10010011	100110011
10010100	010101001
10010101	100110101
10010110	100110110
10010111	100110111
10011000	111101001
10011001	100111001
10011010	100111010
10011011	100111011
10011100	110101001
10011101	100111101
10011110	100111110
10011111	100111111
10100000	011101010
10100001	001101010
10100010	101010010
10100011	101010011
10100100	010101010
10100101	101010101
10100110	101010110
10100111	101010111
10101000	111101010
10101001	101011001
10101010	101011010
10101011	101011011
10101100	110101010
10101101	101011101
10101110	101011110
10101111	101011111
10110000	011101011
10110001	001101011
10110010	101110010
10110011	101110011
10110100	010101011
10110101	101110101
10110110	101110110
10110111	101110111

--`,,`-`-`,,`,,`,`,,`---
Copyright International Organization for Standardization
Provided by IHS under license with ISO
No reproduction or networking permitted without license from IHS
Not for Resale

8-bit byte	9-bit pattern
10111000	111101011
10111001	101111001
10111010	101111010
10111011	101111011
10111100	110101011
10111101	101111101
10111110	101111110
10111111	101111111
11000000	110001011
11000001	110001001
11000010	110010010
11000011	110010011
11000100	110001010
11000101	110010101
11000110	110010110
11000111	110010111
11001000	110001111
11001001	110011001
11001010	110011010
11001011	110011011
11001100	110001110
11001101	110011101
11001110	110011110
11001111	110011111
11010000	011101101
11010001	001101101
11010010	110110010
11010011	110110011
11010100	010101101
11010101	110110101
11010110	110110110
11010111	110110111
11011000	111101101
11011001	110111001
11011010	110111010
11011011	110111011
11011100	110101101
11011101	110111101
11011110	110111110
11011111	110111111
11100000	011101110
11100001	001101110
11100010	111010010
11100011	111010011
11100100	010101110
11100101	111010101
11100110	111010110
11100111	111010111
11101000	111101110
11101001	111011001
11101010	111011010
11101011	111011011
11101100	110101110
11101101	111011101
11101110	111011110
11101111	111011111
11110000	011101111
11110001	001101111
11110010	111110010
11110011	111110011
11110100	010101111
11110101	111110101
11110110	111110110
11110111	111110111
11111000	111101111
11111001	111111001
11111010	111111010
11111011	111111011
11111100	110101111
11111101	111111101
11111110	111111110
11111111	111111111

Copyright International Organization for Standardization
Provided by IHS under license with ISO
No reproduction or networking permitted without license from IHS
Not for Resale

Annex G

(normative)

Measurement of bit shift

The equipment normally used for recording interchange cartridges shall be used for recording the tape under test.

The tape shall be in the pre-recording condition as defined in 7.17.

The tape shall be written in any start/stop mode compatible with system operation.

G.1 Read equipment

The tape shall be read on any tape transport in which the speed is within 1 % of nominal speed.

There are no absolute requirements on the output voltage from the read head. However, the head design and the tape speed shall be chosen to avoid problems from low signal-to-noise ratios.

a) Read Head

- Inductive head: The gap length shall be less than 0,63 µm.

- Magneto-resistive head: The effective read gap, calculated from the geometric mean of the distances from the element to each shield, shall be less than 0,63 µm.

b) Read Channel

The frequency response of the head and read amplifier shall meet the following specification when tested with a wire placed close to and parallel to the read gap.

For an inductive head, the overall response shall be within 1 dB from a +6 dB/octave line over the frequency range corresponding to one twentieth of the ONEs frequency to 2,0 times the ONEs frequency. For example, a tape transport operated at 762 mm/s shall require a frequency range of 18,5 kHz to 740,7 kHz. The phase response shall be within 2° of a straight line over the same frequency range.

For a magneto-resistive head, the overall response shall be within 1 dB of flat over the above frequency range and the phase response shall be within 2° of a straight line over the same frequency range.

Response of either read channel shall roll off at 18 dB/octave starting at 2,0 times the ONEs frequency.

G.2 Measurement

The average bit cell length (L) is obtained from any pair of reference zero crossings (RZC) located on either side of the test zero crossing (TZC). A reference zero crossing is a ONE zero crossing with at least two adjacent ONE zero crossings on each side. The reference zero crossings shall not be more than 40 bit cells apart to keep the maximum error due to rate-of-change under 2 %.

Copyright International Organization for Standardization
Provided by IHS under license with ISO
No reproduction or networking permitted without license from IHS
Not for Resale

G.3 Data analysis

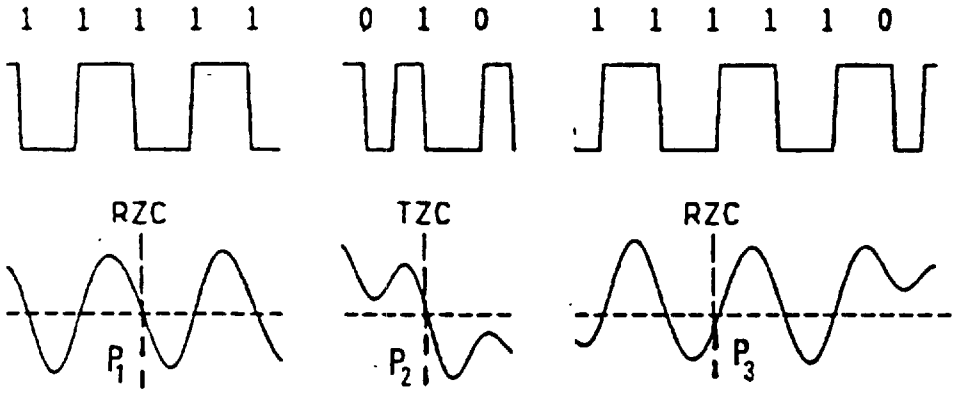

if n is the number of bit cells between reference zero crossings, the average bit cell length shall be

$$L = \frac{P_3 - P_1}{n}$$

where

P_n is the position of the n-th ONE zero crossing.

If there are m bit intervals between the first reference zero crossing and the test zero crossing, then

$$\text{Bit shift in percent} = \frac{|mL - (P_2 - P_1)|}{L} \times 100$$

Copyright International Organization for Standardization
Provided by IHS under license with ISO
No reproduction or networking permitted without license from IHS
Not for Resale

Annex H

(informative)

Summary of data flow

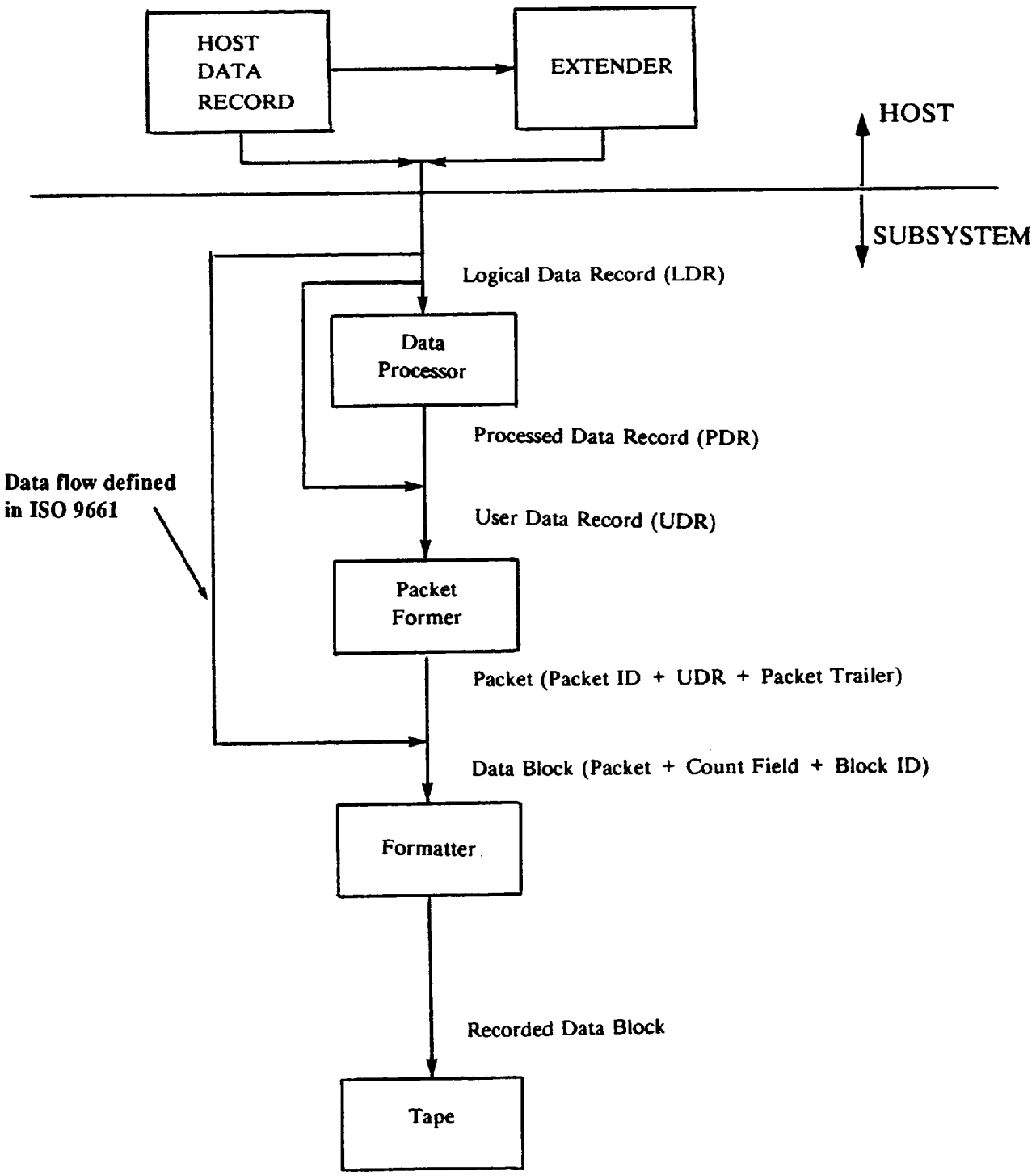

Copyright International Organization for Standardization
Provided by IHS under license with ISO
No reproduction or networking permitted without license from IHS
Not for Resale

Annex J

(normative)

Implementation of a CRC

J.1 Description

Each CRC shall consist of 16 bits and be represented by two bytes, CRC 1 and CRC 2.

J.2 Computation

The CRC shall be computed from the generator polynomial

$$x^{16} + x^{15} + x^8 + x + 1$$

as shown in the following shift register representation:

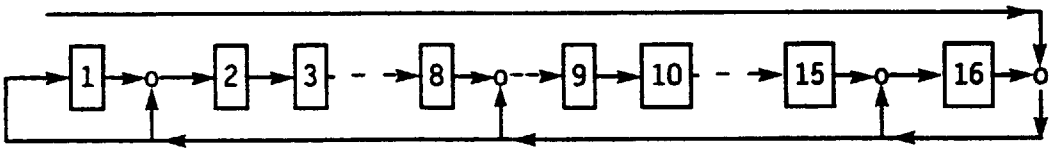

where o indicates modulo two addition.

Prior to the computation all positions of the shift register shall be set to ZERO.

Bits within a byte shall be processed starting with bit 8, the least significant bit, and ending with bit 1, the most significant bit.

J.3 Allocation of bits to CRC 1 and CRC 2

On completion of the computation the bits in the shift register shall be allocated to the bit positions in the two CRC bytes as follows:

	CRC Byte 1	CRC Byte 2
Bits in the shift register	9 to 16	1 to 8

Copyright International Organization for Standardization
Provided by IHS under license with ISO
No reproduction or networking permitted without license from IHS
Not for Resale

Annex K

(normative)

Calculation of a Physical Position Indicator

K.1 Description

Physical Position Indicators (PPIs) are used to provide a coarse, fast indication of the location of the data along the length of the tape without the necessity for reading the data or all the Block-ID bytes.

K.2 Calculation

At any point along the length of the tape the value of a PPI shall be:

$$62{,}5 \left(\frac{\sqrt{625 + R_o^2 - R^2}}{R} - \frac{25}{R_o} \right)$$

and rounded up to the next higher positive integer

where:

R_o is the radius of the fully loaded reel of tape in millimetres

R is the current radius of the reel of tape in millimetres.

K.3 Requirement

The value shall lie in the range

$$1 \leq \text{PPI} \leq 91$$

Copyright International Organization for Standardization
Provided by IHS under license with ISO
No reproduction or networking permitted without license from IHS
Not for Resale

UDC 681.327.636

Descriptors: data processing, information interchange, data recording, magnetic recording, data storage devices, magnetic tapes, magnetic tape cartridges, specifications, dimensions, formats, interchangeability.

Price based on 61 pages

Copyright International Organization for Standardization
Provided by IHS under license with ISO
No reproduction or networking permitted without license from IHS

Not for Resale