INTERNATIONAL STANDARD

ISO/IEC 11557

First edition
1992-12-15

Information technology — 3,81 mm wide magnetic tape cartridge for information interchange — Helical scan recording — DDS-DC format using 60 m and 90 m length tapes

Technologies de l'information — Cartouche de bande magnétique de 3,81 mm *de large pour l'échange d'information — Enregistrement hélicoïdal — Format DDS-DC utilisant des bandes de* 60 m *et* 90 m *de long*

Reference number
ISO/IEC 11557:1992(E)

Copyright International Organization for Standardization
Provided by IHS under license with ISO
No reproduction or networking permitted without license from IHS

Not for Resale

Contents **Page**

Section 1 - General 1

1 Scope 1

2 Normative references 1

3 Conformance 2

3.1 Magnetic tape cartridge 2
3.2 Generating system 2
3.3 Receiving system 2

4 Definitions 3

4.1 Absolute Frame Number 3
4.2 Access Point 3
4.3 algorithm 3
4.4 Automatic Track Finding 3
4.5 Area ID 3
4.6 Average Signal Amplitude 3
4.7 azimuth 3
4.8 back surface 3
4.9 byte 3
4.10 cartridge 3
4.11 Channel Bit 3
4.12 Codeword 3
4.13 Data Format ID 3
4.14 Early Warning Point 3
4.15 End of Data 3
4.16 Entity 3
4.17 Error Correcting Code 4
4.18 flux transition position 4
4.19 flux transition spacing 4
4.20 frame 4
4.21 Housekeeping Frame 4
4.22 Logical Beginning of Tape 4
4.23 magnetic tape 4
4.24 Master Standard Amplitude Calibration Tape 4
4.25 Master Standard Reference Tape 4

© ISO/IEC 1992
All rights reserved. No part of this publication may be reproduced or utilized in any form or by any means, electronic or mechanical, including photocopying and microfilm, without permission in writing from the publisher.

ISO/IEC Copyright Office • Case Postale 56 • CH-1211 Genève 20 • Switzerland

Printed in Switzerland

Copyright International Organization for Standardization
Provided by IHS under license with ISO
No reproduction or networking permitted without license from IHS Not for Resale

4.26	Optimum Recording Field	**4**
4.27	Partition boundary	**4**
4.28	Physical Beginning of Tape	**4**
4.29	Physical End of Tape	**4**
4.30	physical recording density	**4**
4.31	pre-recording condition	**4**
4.32	processing	**4**
4.33	processed data	**4**
4.34	Processed Record	**5**
4.35	Processed Record Sequence	**5**
4.36	Record	**5**
4.37	Reference Recording Field	**5**
4.38	reprocessing	**5**
4.39	Secondary Standard Amplitude Calibration Tape	**5**
4.40	Secondary Standard Reference Tape	**5**
4.41	Separator Mark	**5**
4.42	Standard Reference Amplitude	**5**
4.43	Tape Reference Edge	**5**
4.44	Test Recording Current	**5**
4.45	track	**5**
4.46	Unprocessed Data	**5**
4.47	Unprocessed Record	**5**
4.48	Virtual End of Tape	**5**
5	Environment and safety	**5**
5.1	Testing environment	**5**
5.2	Operating environment	**6**
5.3	Storage environment	**6**
5.4	Transportation	**6**
5.5	Safety	**6**
5.6	Flammability	**6**
Section 2 - Requirements for the case		**6**
6	Dimensional and mechanical characteristics of the case	**6**
6.1	General	**6**
6.2	Overall dimensions (figures 6 and 7)	**7**
6.3	Loading grip (figure 6)	**8**
6.4	Holding areas (figure 6)	**8**
6.5	Notches of the lid (figures 5 and 8)	**8**
6.6	Lid dimensions (figures 6 to 8)	**8**
6.7	Optical detection of the beginning and end of tape (figures 9 and 12)	**9**
6.8	Bottom side (figures 10 and 11)	**10**
6.8.1	Locking mechanism of the slider	**10**
6.8.2	Access holes	**10**
6.8.3	Recognition, sub-datums, and write-inhibit holes	**11**
6.8.4	Datum holes	**12**
6.8.5	Access room for tape guides	**13**
6.8.6	Holes for accessing the hubs	**13**
6.8.7	Internal structure of the lower half (figure 12)	**13**

Copyright International Organization for Standardization
Provided by IHS under license with ISO
No reproduction or networking permitted without license from IHS
Not for Resale

6.8.8	Light path (figure 12)	14
6.8.9	Support Areas (figure 13)	15
6.8.10	Datum Areas (figure 13)	15
6.8.11	Relationship between Support and Datum Areas and Reference Plane Z (figure 14)	15
6.9	Hubs (figures 15 and 16)	15
6.10	Leader and trailer attachment	16
6.11	Interface between the hubs and the drive spindles (figure 17)	16
6.12	Opening of the lid (figure 18)	16
6.13	Release of the hub locking mechanism (figures 19 and 20)	16
6.14	Label areas (figures 21 and 22)	17
Section 3 - Requirements for the unrecorded tape		28
7	Mechanical, physical and dimensional characteristics of the tape	28
7.1	Materials	28
7.2	Tape length	28
7.2.1	Length of magnetic tape	28
7.2.2	Length of leader and trailer tapes	28
7.3	Tape width	28
7.4	Discontinuities	28
7.5	Total thickness	28
7.6	Longitudinal curvature	28
7.7	Cupping	29
7.8	Coating adhesion	29
7.9	Layer-to-layer adhesion	30
7.10	Tensile strength	30
7.10.1	Breaking strength	30
7.10.2	Yield strength	30
7.11	Residual elongation	30
7.12	Electrical resistance of coated surfaces	30
7.13	Light transmittance of the tape	31
8	Magnetic recording characteristics	31
8.1	Optimum Recording Field	32
8.2	Signal Amplitude	32
8.3	Resolution	32
8.4	Overwrite	33
8.4.1	Physical recording densities of 750,6 ftpmm and 3 002 ftpmm	33
8.4.2	Physical recording densities of 83,4 ftpmm and 1 001 ftpmm	33
8.5	Ease of erasure	33
8.6	Tape quality	33
8.6.1	Missing pulses	33
8.6.2	Missing pulse zone	33
8.7	Signal-to-Noise Ratio (S/N) characteristic	34
Section 4 - Requirements for an interchanged tape		34
9	Format	34

Copyright International Organization for Standardization
Provided by IHS under license with ISO
No reproduction or networking permitted without license from IHS
Not for Resale

9.1	General	34
9.2	Basic Groups	35
9.2.1	Entity	35
9.2.2	Group Information Table	37
9.2.3	Block Access Table (BAT)	39
9.3	Sub-Groups	42
9.3.1	G1 Sub-Group	42
9.3.2	G2 Sub-Group - randomizing	43
9.3.3	G3 Sub-Group	43
9.3.4	G4 Sub-Group	46
9.3.5	Main Data Block	49
9.4	Sub-Data Area	51
9.4.1	Pack item Number 1	51
9.4.2	Pack item Number 2	52
9.4.3	Pack item Number 3	53
9.4.4	Pack item Number 4	54
9.4.5	Pack item Number 5	55
9.4.6	Pack Item Number 6	56
9.4.7	Pack item Number 7	57
9.4.8	Pack item Number 8	58
9.4.9	Sub Data Block	58
10	Method of recording	62
10.1	Physical recording density	62
10.2	Long-term average bit cell length	62
10.3	Short-term average bit cell length	62
10.4	Rate of change	62
10.5	Bit shift	62
10.6	Read Signal Amplitude	62
10.7	Maximum recorded levels	62
11	Track geometry	62
11.1	Track configuration	62
11.2	Average track pitch	63
11.3	Variations of the track pitch	63
11.4	Track width	63
11.5	Track angle	64
11.6	Track edge linearity	64
11.7	Track length	64
11.8	Ideal tape centreline	64
11.9	Azimuth angles	64
12	Recording of blocks on the tape	64
12.1	Recorded Main Data Block	64
12.2	Recorded Sub Data Block	64
12.3	Margin Blocks, Preamble Blocks and Postamble Blocks	64
12.4	Spacer Blocks	64

Copyright International Organization for Standardization
Provided by IHS under license with ISO
No reproduction or networking permitted without license from IHS
Not for Resale

13	Format of a track	65
13.1	Track capacity	65
13.2	Positioning accuracy	65
13.3	Tracking scheme	65
14	Layout of a Single Data Space tape	68
14.1	Device Area	68
14.2	Reference Area	69
14.3	Position tolerance band No. 1	69
14.4	System Area	69
14.5	Data Area	69
14.5.1	Vendor Group	70
14.5.2	Recorded Data Group	70
14.5.3	ECC3	70
14.5.4	Multiple recorded instances	71
14.5.5	Repeated frames	71
14.5.6	Appending and overwriting	72
14.6	EOD Area	74
14.7	Post-EOD Area	74
14.8	Early Warning Point - EWP	74
14.9	Initialization	74
15	Layout of Partitioned tape	75
15.1	Overall magnetic tape layout	75
15.1.1	Device Area	76
15.1.2	Partition 1	76
15.1.3	Partition 0	77
15.2	Area ID	77
15.3	System Area Pack Items No. 3 and No. 4	77
15.4	Empty partitions	77
15.5	Initialization of Partitioned tapes	77
16	Housekeeping frames	78
16.1	Amble Frames	78
16.2	System Log Frames	78
16.3	Tape Management Frames	78

Annexes

A - Measurement of the light transmittance of the prism	79
B - Recognition holes	81
C - Means to open lid	82
D - Measurement of light transmittance of tape and lead	83
E - Measurement of Signal to Noise Ratio	86
F - Method for determining the Nominal and the Maximum Allowable Recorded Levels	87
G - Representation of 8-Bit bytes by 10-bit patterns	89

Copyright International Organization for Standardization
Provided by IHS under license with ISO
No reproduction or networking permitted without license from IHS
Not for Resale

H - Measurement of bit shift 95

J - Recommendations for transportation 98

K - Method of measuring track edge linearity 99

L - Read-After-Write 100

M - Example of the content of a Basic Group No. 0 101

N - Registration of algorithms 102

Copyright International Organization for Standardization
Provided by IHS under license with ISO
No reproduction or networking permitted without license from IHS
Not for Resale

Foreword

ISO (the International Organization for Standardization) and IEC (the International Electrotechnical Commission) form the specialized system for worldwide standardization. National bodies that are members of ISO or IEC participate in the development of International Standards through technical committees established by the respective organization to deal with particular fields of technical activity. ISO and IEC technical committees collaborate in fields of mutual interest. Other international organizations, governmental and non-governmental, in liaison with ISO and IEC, also take part in the work.

In the field of information technology, ISO and IEC have established a joint technical committee, ISO/IEC JTC1. Draft International Standards adopted by the joint technical committee are circulated to national bodies for voting. Publication as an International Standard requires approval by at least 75 % of the national bodies casting a vote.

International Standard ISO/IEC 11557 was prepared by the European Computer Manufacturers Association (as Standard ECMA-150) and was adopted, under a special "fast-track procedure", by Joint Technical Committee ISO/IEC JTC1, *Information technology*, in parallel with its approval by national bodies of ISO and IEC.

Annexes A,D to H and K form an integral part of this International Standard. Annexes B, C, J, L to N are for information only.

Patents

During the preparation of the ECMA standard, information was gathered on patents upon which application of the standard might depend. Relevant patents were identified as belonging to Hewlett Packard Limited and the Sony Corporation. However, neither ECMA, nor ISO/IEC can give authoritative or comprehensive information about evidence, validity or scope of patent and like rights. The patent holders have stated that licences will be granted under reasonable and non-discriminatory terms. Communications on this subject should be addressed to

Hewlett-Packard Limited
Computer Peripherals Bristol
Filton Road
Stoke Gifford
Bristol BS12 6QZ
United Kingdom

Sony Corporation
Licensing and Trademark Division
6-7-35 Kitashinagawa
Shinagawa-ku
Tokyo 141
Japan

Copyright International Organization for Standardization
Provided by IHS under license with ISO
No reproduction or networking permitted without license from IHS
Not for Resale

Introduction

This International Standard ISO/IEC 11557 incorporates all the specifications of ISO/IEC 10777, together with extensions and modifications which specify the additional features of the DDS-DC recorded format. The specifications of the tape, cartridge, recorded signal, recording method and most of the recorded format are identical with those in ISO/IEC 10777.

This International Standard specifies two types of tape cartridge. For type A, the magnetic tape has a nominal thickness of 13 µm. For type B, the magnetic tape has a nominal thickness of 9 µm.

It is not intended that this International Standard replace ISO/IEC 10777. Cartridges and drives which conform to ISO/IEC 10777 may, in addition, conform to this International Standard, but only if they support those features herein which are not in ISO/IEC 10777.

Copyright International Organization for Standardization
Provided by IHS under license with ISO
No reproduction or networking permitted without license from IHS
Not for Resale

Information technology - 3,81 mm wide magnetic tape cartridge for information interchange - Helical scan recording - DDS-DC format using 60 m and 90 m length tapes

Section 1 - General

1 Scope

This International Standard specifies the physical and magnetic characteristics of a 3,81 mm wide magnetic tape cartridge to enable interchangeability of such cartridges. It also specifies the quality of the recorded signal, the recording method and the recorded format, thereby allowing data interchange between drives by means of such magnetic tape cartridges.

This International Standard specifies two types of cartridge which, for the purpose of this International Standard, are referred to as Type A and Type B.

For Type A, the magnetic tape is nominally 13 µm thick and has a length of up to 60,5 m.

For Type B, the magnetic tape is nominally 9 µm thick and has a length of up to 92,0 m.

The recorded format, known as Digital Data Storage - Data Compression (DDS-DC), includes all the features of the DDS recorded format specified in ISO/IEC 10777, with additional features which support the recording of data which has been processed, by the generating system, after receipt from the host and prior to recording. Such features are intended for, but are not limited to, the support of one or more data compression Algorithms.

Information interchange between systems by means of this International Standard also requires the use, at a minimum, of a labelling and file structure, an interchange code and a Processing Algorithm which are agreed upon by the interchange parties. It is not within the scope of this International Standard to specify the labelling and file structure, the interchange code or the Processing Algorithm.

2 Normative references

The following standards contain provisions which, through reference in this text, constitute provisions of this International Standard. At the time of publication, the editions indicated were valid. All standards are subject to revision, and parties to agreements based on this International Standards are encouraged to investigate the possibility of applying the most recent editions of the standards indicated below. Members of IEC and ISO maintain registers of currently valid International Standards.

ISO/R 527:1966, *Plastics - Determination of tensile properties.*

ISO 1302:...[2], *Technical Drawings - Method of indicating surface texture on drawings.*

ISO/IEC 10777:1991, *Information technology - 3,81 mm wide magnetic tape cartridge for information interchange - Helical scan recording - DDS format.*

ISO/IEC 11576:...[1], *Information technology - Procedure for the registration of algorithms for the lossless compression of data.*

IEC 950:1991, *Safety of Information technology equipment, including electrical business equipment.*

[1] To be published.

[2] Currently under revision.

Copyright International Organization for Standardization
Provided by IHS under license with ISO
No reproduction or networking permitted without license from IHS Not for Resale

3 Conformance

3.1 Magnetic tape cartridge

A tape cartridge shall be in conformance with this International Standard if it meets all the mandatory requirements specified herein for either Type A or Type B. The tape requirements shall be satisfied throughout the extent of the tape.

In particular, in order to be in conformance with this International Standard, a recorded tape shall contain at least one recorded Entity.

For each recorded Entity the Algorithm used for Processing the data therein shall have been registered, and the registration identification shall be included, when appropriate, in Byte No. 3 of the Entity Header.

A recorded tape shall be either a Single Data Space Tape or a Partitioned Tape.

3.2 Generating system

A system generating a magnetic tape cartridge for interchange shall be entitled to claim conformance with this International Standard if all recordings on the tape meet the mandatory requirements of this International Standard, and if either or both methods of appending and overwriting are implemented. In particular it shall be able to record unprocessed data, and processed data within entities.

A claim of conformance shall state which of the following optional features are implemented and which are not

- the performing of a Read-After-Write check and the recording of any necessary repeated frames;
- the recording of multiple representations of the same Basic Group;
- the generation of ECC3 Frames.

In addition a claim of conformance shall state

- whether or not one, or more, registered Algorithm(s) are implemented within the system and are able to process data received from the host prior to collecting the data into Basic Groups, and
- the Algorithm registration identification number(s) of the implemented Algorithm(s);
- whether Type A cartridges or Type B cartridges or both are supported.

3.3 Receiving system

A system receiving a magnetic tape cartridge for interchange shall be entitled to claim full conformance with this International Standard if it is able to handle any recording made on the tape according to this International Standard. In particular it shall

- be able to recognize repeated frames and to make available to the host, data and Separator Marks from only one of these frames;
- be able to recognize multiple representations of the same Basic Group, and to make available to the host, data and Separator Marks from only one of these representations;
- be able to recognize an ECC3 frame, and ignore it if the system is not capable of using ECC3 check bytes in a process of error correction;
- be able to update the System Log(s) if the Write-inhibit Hole state so permits;
- be able to recognize processed data within an entity, identify the Algorithm used, and make the Algorithm registration number available to the host;
- be able to make processed data available to the host.

Copyright International Organization for Standardization
Provided by IHS under license with ISO
No reproduction or networking permitted without license from IHS
Not for Resale

In addition a claim of conformance shall state

- whether or not the system is capable of using ECC3 check bytes in a process of error correction;
- whether or not one or more Reprocessing Algorithm(s) are implemented within the system, and are able to be applied to Processed Data prior to making such data available to the host;
- the Algorithm registration number(s) of the Processing Algorithm(s) for which a complementary Reprocessing Algorithm is implemented, and
- whether Type A cartridges or Type B cartridges or both are supported.

4 Definitions

For the purpose of this International Standard, the definitions given in ISO/IEC 10777 and the following definitions apply.

4.1 Absolute Frame Number (AFN): A sequence number, encoded in the frame.

4.2 Access Point: A point, at the start of a Processed Record Sequence, at which the presentation of Codewords to a Reprocessing Algorithm is required to start, regardless of whether the data of interest in a retrieval operation starts at that point or at a subsequent point.

4.3 algorithm: A set of rules for transforming the logical representation of data.

4.4 Automatic Track Finding (ATF): The method by which tracking is achieved.

4.5 Area ID: An identifier defining the area of the tape and specifying the types of frame written.

4.6 Average Signal Amplitude: The average peak-to-peak value of the output signal from the read head at the fundamental frequency of the specified physical recording density over a minimum of 7,8 mm of track, exclusive of missing pulses.

4.7 azimuth: The angular deviation, in degrees, minutes and seconds of arc, made by the mean flux transition line with the line normal to the centreline of the recorded track.

4.8 back surface: The surface of the tape opposite to the magnetic coating which is used to record data.

4.9 byte: An ordered set of bits acted upon as a unit.

4.10 cartridge: A case containing magnetic tape stored on twin hubs.

4.11 Channel Bit: A bit after 8-10 transformation.

4.12 Codeword: A word which is generated by a Processing Algorithm. The number of bits in a Codeword is variable, and is not defined by this Standard.

4.13 Data Format ID: An identifier specifying which data format is being used on the tape.

4.14 Early Warning Point (EWP): A point along the length of the tape at which warning is given of the approach, in the forward direction of tape motion, of the partition boundary or of the Physical End of Tape.

4.15 End of Data (EOD): The point on the tape at the end of the group which contains the last user data.

4.16 Entity: A unit of recorded data, comprising a Processed Record Sequence preceded by housekeeping information.

Copyright International Organization for Standardization
Provided by IHS under license with ISO
No reproduction or networking permitted without license from IHS
Not for Resale

4.17 **Error Correcting Code (ECC):** A mathematical computation yielding check bytes used for the detection and correction of errors.

4.18 **flux transition position:** That point which exhibits maximum free-space flux density normal to the tape surface.

4.19 **flux transition spacing:** The distance along a track between successive flux transitions.

4.20 **frame:** A pair of adjacent tracks with azimuths of opposite polarity, in which the track with the positive azimuth precedes that with the negative azimuth.

4.21 **Housekeeping Frame:** A frame which contains no user data and which is identified as such by the values in the data fields therein.

4.22 **Logical Beginning of Tape (LBOT):** The point along the length of the tape where a recording of data for interchange commences.

4.23 **magnetic tape:** A tape which will accept and retain the magnetic signals intended for input, output and storage purposes on computers and associated equipment.

4.24 **Master Standard Amplitude Calibration Tape:** A pre-recorded tape on which the standard signal amplitudes have been recorded in the tracks of positive azimuth, 23,0 µm wide, at nominal track pitch, on an a.c.-erased tape.

NOTES

1 The tape includes recordings made at 83,4 ftpmm, 333,6 ftpmm, 500,4 ftpmm, 1 001 ftpmm and 1 501 ftpmm.

2 The Master Standard Amplitude Calibration Tape has been established by Sony Corporation.

4.25 **Master Standard Reference Tape:** A tape selected as the standard for Reference Recording Field, Signal Amplitude, Resolution, Overwrite and Signal-to-Noise Ratio.

NOTE 3 - The Master Standard Reference Tape has been established by Sony Corporation.

4.26 **Optimum Recording Field:** In the plot of Average Signal Amplitude against the recording field at the physical recording density of 3 002 ftpmm, the field that causes the maximum Average Signal Amplitude.

4.27 **Partition boundary:** The point along the length of a magnetic tape at which Partition 1 ends and Partition 0 commences.

4.28 **Physical Beginning of Tape (PBOT):** The point where the leader tape is joined to the magnetic tape.

4.29 **Physical End of Tape (PEOT):** The point where the trailer tape is joined to the magnetic tape.

4.30 **physical recording density:** The number of recorded flux transitions per unit length of track, expressed in flux transitions per millimetre (ftpmm).

4.31 **pre-recording condition:** The recording levels above which a tape intended for interchange shall not previously have been recorded.

4.32 **processing:** The use of an Algorithm to transform host data into Codewords.

4.33 **processed data:** A sequence of Codewords which results from the application of processing to data.

Copyright International Organization for Standardization
Provided by IHS under license with ISO
No reproduction or networking permitted without license from IHS
Not for Resale

4.34 **Processed Record:** A sequence of Codewords which results from the application of processing to an Unprocessed Record.

4.35 **Processed Record Sequence:** A sequence of one or more Processed Records which starts on an 8-bit boundary and ends on a subsequent 8-bit boundary.

4.36 **Record:** Related data treated as a unit of information.

4.37 **Reference Recording Field:** The Optimum Recording Field of the Master Standard Reference Tape.

4.38 **reprocessing:** The use of an Algorithm to transform Codewords into data as required by the host.

4.39 **Secondary Standard Amplitude Calibration Tape:** A tape pre-recorded as defined for the Master Standard Amplitude Calibration Tape; the outputs are known and stated in relation to those of the Master Standard Amplitude Calibration Tape.

NOTE 4 - Secondary Standard Amplitude Calibration Tapes can be ordered from Sony Corporation, Audio Device Business Department, Component Marketing Group, 4-10-18, Takanawa, Minato-ku, Tokyo 108, Japan, under Part Number TY-7000G until the year 2000. It is intended that these be used for calibrating tertiary reference tapes for use in routine calibration.

4.40 **Secondary Standard Reference Tape:** A tape the performance of which is known and stated in relation to that of the Master Standard Reference Tape.

NOTE 5 - Secondary Standard Reference Tapes can be ordered from Sony Corporation, Major Customer Division, Magnetic Products Group, 6-7-35, Kitashinagawa, Shinagawa-ku, Tokyo 141, Japan, under Part Number RSD 1079 until the year 2000. It is intended that these be used for calibrating tertiary reference tapes for use in routine calibration.

4.41 **Separator Mark:** A record containing no user data, which is used to separate data.

4.42 **Standard Reference Amplitude:** The Average Signal Amplitude from the tracks of positive azimuth of the Master Standard Amplitude Calibration Tape at a specified physical recording density.

4.43 **Tape Reference Edge:** The bottom edge of the tape when viewing the recording side of the tape, with the PEOT to the observer's right.

4.44 **Test Recording Current:** The current that produces the Reference Recording Field.

4.45 **track:** A diagonally positioned area on the tape along which a series of magnetic signals may be recorded.

4.46 **Unprocessed Data:** Data which has not been subjected to processing.

4.47 **Unprocessed Record:** A Record of Unprocessed Data, comprising an integral number of bytes.

4.48 **Virtual End of Tape (VEOT):** The point along the length of the magnetic tape within Partition 1 which defines the end of the part of Partition 1 which is usable for recording data for interchange.

5 Environment and safety

Unless otherwise stated, the conditions specified below refer to the ambient conditions of the air immediately surrounding the cartridge.

5.1 Testing environment

Unless otherwise stated tests and measurements made on the tape cartridge to check the requirements of this International Standard shall be carried out under the following conditions:

Copyright International Organization for Standardization
Provided by IHS under license with ISO
No reproduction or networking permitted without license from IHS
Not for Resale

temperature : 23 °C ± 2 °C

relative humidity : 40 % to 60 %

conditioning period
before testing : 24 h

5.2 Operating environment

Cartridges used for data interchange shall be capable of operating under the following conditions:

temperature : 5 °C to 45 °C

relative humidity : 20 % to 80 %

wet bulb temperature : 26 °C max.

There shall be no deposit of moisture on or in the cartridge.

Conditioning before operating:

If a cartridge has been exposed during storage and/or transportation to a condition outside the above values, before use the cartridge shall be conditioned in the operating environment for a time at least equal to the period during which it has been out of the operating environment, up to a maximum of 24 h.

NOTE 6 - Rapid variations of temperature should be avoided.

5.3 Storage environment

For long-term or archival storage of cartridges the following conditions shall be observed:

temperature : 5 °C to 32 °C

relative humidity : 20 % to 60 %

wet bulb temperature : 26 °C max.

The stray magnetic field at any point on the tape shall not exceed 4 000 A/m. There shall be no deposit of moisture on or in the cartridge.

5.4 Transportation

Recommended limits for the environment to which a cartridge may be subjected during transportation, and the precautions to be taken to minimize the possibility of damage, are provided in annex J.

5.5 Safety

The cartridge and its components shall satisfy the requirements of IEC 950.

5.6 Flammability

The cartridge and its components shall be made from materials, which if ignited from a match flame, do not continue to burn in a still carbon dioxide atmosphere.

Section 2 - Requirements for the case

6 Dimensional and mechanical characteristics of the case

6.1 General

The case of the cartridge shall comprise

- an upper half,

Copyright International Organization for Standardization
Provided by IHS under license with ISO
No reproduction or networking permitted without license from IHS Not for Resale

- a lower half,
- a slider movably mounted on the lower half,
- a lid pivotally mounted on the upper half.

In the drawings, using third angle projection, an embodiment of the cartridge is shown as an example.

Figure 1 is a perspective view of the cartridge seen from top.

Figure 2 is a perspective view of the cartridge seen from bottom.

Figure 3 is a partial view of the rear side.

Figure 4 is a schematic view showing the Reference Planes X, Y and Z.

Figure 5 shows the front side.

Figure 6 shows the top side with the lid in closed position.

Figure 7 shows the left side.

Figure 8 shows the top side with the lid in open position.

Figure 9 shows the left side with the lid in open position.

Figure 10 shows the bottom side with the lid and the slider in closed position.

Figure 11 shows the bottom side with the lid and the slider in open position.

Figure 12 is a view from the top of the inside of the lower half with the upper half removed.

Figure 13 is a view of the bottom half with the lid and the slider in open position.

Figure 14 is a view of the left side with the lid and the slider in open position.

Figure 15 is a top view of a hub.

Figure 16 is a side view of a hub with partial cross-section.

Figure 17 is a partial cross-section through a hub and both halves of the case showing the interface with the drive spindle.

Figure 18 shows at a larger scale the lid in the open position.

Figures 19, 20 show at a larger scale the functional relationship between the lid and the locking mechanism of the hubs.

Figures 21, 22 show the label areas on the top and the rear side.

The dimensions are referred to three orthogonal Reference Planes X, Y and Z (figure 4).

6.2 Overall dimensions (figures 6 and 7)

The overall dimensions of the case with the lid in the closed position shall be

L_1 = 73,0 mm ± 0,3 mm

L_2 = 54,0 mm ± 0,3 mm

L_3 = 10,5 mm ± 0,2 mm

The edges formed by the rear side and the left and right sides shall be rounded off with a radius

R_1 = 1,5 mm max.

The two edges of the lid shall be rounded off with a radius

R_2 = 0,5 mm max.

Copyright International Organization for Standardization
Provided by IHS under license with ISO
No reproduction or networking permitted without license from IHS
Not for Resale

6.3 Loading grip (figure 6)

The top side shall have a loading grip for loading and positioning the cartridge into the drive. The position and dimensions of the loading grip shall be

L_4 = 25,5 mm ± 0,3 mm

L_5 = 10 mm min.

L_6 = 5,0 mm ± 0,2 mm

L_7 = 2,0 mm min.

The depth of the loading grip below the surface of the top side shall be

$0{,}5\ \text{mm}\ {}^{+\,0{,}2}_{-\,0{,}0}\ \text{mm}$

6.4 Holding areas (figure 6)

The two areas shown shaded in figure 6 shall be the areas along which the cartridge shall be held down when inserted in the drive. Their positions and dimensions shall be

L_8 = 6,0 mm ± 0,1 mm

L_9 = 5,0 mm ± 0,1 mm

6.5 Notches of the lid (figures 5 and 8)

The lid shall have two pairs of notches.

The first pair of notches, the slider lock release notches, allows elements of the drive to release the locking mechanism of the slider. The positions and dimensions of these notches shall be

L_{10} = 0,4 mm max.

L_{11} = 3,0 mm min.

L_{12} = 1,2 mm ± 0,1 mm

L_{13} = 49,8 mm ± 0,2 mm

The second pair of notches, the slider movement notches, allows elements of the drive to move the slider from the closed to the open position (see also 6.8.1). The positions and dimensions of these notches shall be

L_{11} = 3,0 mm min.

L_{14} = 0,9 mm min.

L_{15} = 7,5 mm ± 0,1 mm

L_{16} = 36,00 mm ± 0,15 mm

6.6 Lid dimensions (figures 6 to 8)

The lid is shown in the closed position in figures 6 and 7. Its dimensions shall be

L_{17} = 1,2 mm ± 0,1 mm

L_{18} = 6,8 mm ± 0,4 mm

L_{19} = 1,1 mm ± 0,1 mm

L_{20} = 2,0 mm ± 0,1 mm

L_{21} = 6,4 mm ± 0,2 mm

Copyright International Organization for Standardization
Provided by IHS under license with ISO
No reproduction or networking permitted without license from IHS
Not for Resale

L_{22} = 1,5 mm ± 0,1 mm

R_3 = 6,8 mm ± 0,4 mm

The lid shall have a chamfer of 45° by

L_{23} = 1,5 mm ± 0,1 mm

There shall be a dimensional relationship between the height L_{24} shown in figure 7, which includes the slider and the upper half, and the height L_{25} of the lid. When a vertical force of 1 N is exerted on the upper half the following condition shall be met.

L_{24} = 10,5 mm ± 0,2 mm

$L_{25} \leq L_{24}$

When no force is exerted

L_{24} = 10,9 mm max.

In figure 8 the lid is shown in the open position. The distance from the front edge of the lid to the rear side shall be

L_{26} = 55,5 mm ± 0,3 mm.

6.7 Optical detection of the beginning and end of tape (figures 9 and 12)

Means for the optical detection of the beginning and end of tape shall be provided. These shall consist of a pair of windows on the left and right sides of the case (see also figure 18). The design of these windows allows this detection for two different drive designs:

- either a light source and a detector are provided in the drive on each side of the cartridge, in which case the light enters the case through the upper windows, falls on a prism (see section A-A) mounted inside the case, which reflects this light so that it goes through the tape and falls on the detector through the lower window; the light transmittance of the prism shall be greater than 50% of that of a reference prism when measured as specified in annex A,
- or, the light of a light source within the drive passes through the tape from inside the cartridge and falls through the lower windows onto the detectors placed on each side of the case.

The positions and dimensions of these windows allow the cartridge to be used with drives implementing either system, they shall be

L_{27} = 6,20 mm ± 0,10 mm

L_{28} = 7,65 mm ± 0,10 mm

$L_{29} = 1{,}50 \text{ mm} \begin{matrix} +0{,}20 \\ -0{,}00 \end{matrix} \text{ mm}$

L_{30} = 3,9 mm ± 0,1 mm

L_{31} = 1,8 mm ± 0,1 mm

L_{32} = 7,0 mm ± 0,2 mm

L_{33} = 2,5 mm min.

Dimension L_{32} specifies the position of the rear edge of the windows relative to Reference Plane Y. Dimension L_{33} shall be measured relative to this rear edge.

Copyright International Organization for Standardization
Provided by IHS under license with ISO
No reproduction or networking permitted without license from IHS
Not for Resale

6.8 Bottom side (figures 10 and 11)

The bottom side is shown in figure 10 with the lid and the slider in the closed position and in figure 11 with both in the open position.

The dimension L_{34} of the bottom half, L_{35} of the slider and L_{36} of the lid shall satisfy the following conditions

L_{34} = 73,0 mm ± 0,3 mm

$L_{35} \leq L_{34}$

$L_{36} \leq L_{34}$

6.8.1 Locking mechanism of the slider

The cartridge shall have a locking mechanism for the slider which locks it in the closed and open positions. The design of this mechanism is not specified by this International Standard, except for the different forces acting on the slider, and for its detent.

The slider shall be spring-loaded by a spring holding it in the closed position when it is unlocked. The force required to operate the slider shall not exceed 2 N.

The slider shall have two grooves with an opening at each end. The detent of the locking mechanism shall protrude through these openings so as to hold the slider in both open and closed positions. The detent shown in cross-section C-C is only an example of implementation.

The grooves are parallel to Reference Plane Z and aligned with the slider lock release notches of the lid. The positions and dimensions of the grooves and of the openings for the detent of the locking mechanism when the slider is in the closed position shall be

L_{37} = 1,2 mm ± 0,1 mm

L_{38} = 49,8 mm ± 0,2 mm

L_{39} = 10,0 mm ± 0,1 mm

$L_{40} = 2{,}0\ \text{mm}\ {}^{+\,0{,}5}_{-\,0{,}0}\ \text{mm}$

L_{41} = 3,0 mm min.

L_{42} = 1,5 mm min.

L_{43} = 0,8 mm ± 0,1 mm

$L_{44} = 0{,}8\ \text{mm}\ {}^{+\,0{,}5}_{-\,0{,}1}\ \text{mm}$

λ = 45° min.

L_{45} = 0,65 mm ± 0,05 mm

The position and dimensions of the openings for the detent when the slider is held in the open position are determined by L_{39}, L_{40}, L_{43} and L_{44}.

In the closed position of the slider, the maximum force to be exerted on the detent in a direction perpendicular to Reference Plane Z and over a stroke of 0,65 mm shall be 0,5 N max.

In the open position of the slider the holding force shall be 0,3 N min.

6.8.2 Access holes

The slider shall have two circular access holes (see section B-B) which, in the open position of the slider, allow penetration of the drive spindles into the hubs. The diameters of these access holes shall be

Copyright International Organization for Standardization
Provided by IHS under license with ISO
No reproduction or networking permitted without license from IHS
Not for Resale

d_1 = 10,0 mm ± 0,2 mm

d_2 = 12,0 mm max.

6.8.3 Recognition, sub-datums, and write-inhibit holes

The bottom half shall have a number of holes on an edge at its rear. This edge shall be defined by

L_{46} = 45,2 mm ± 0,2 mm

L_{47} = 49,2 mm ± 0,2 mm

The centres of these holes lie on a line perpendicular to Reference Plane Y at a distance from Reference Plane X of

L_{48} = 47,2 mm ± 0,2 mm

6.8.3.1 Recognition Holes

There shall be four Recognition Holes numbered from 1 to 4 as shown in figure 10. Their positions and dimensions shall be

d_3 = 2,5 mm ± 0,1 mm

L_{49} = 1,0 mm ± 0,1 mm

L_{50} = 56,0 mm ± 0,3 mm

L_{51} = 4,0 mm ± 0,1 mm

L_{52} = 1,0 mm ± 0,1 mm

L_{53} = 3,0 mm min.

All Recognition Holes shall have the cross-section shown in cross-section F-F in figure 11 for Recognition Hole No. 1.

One of the two cross-sections F-F shows a Recognition Hole closed by means of a plug, the other shows it with the plug punched out. These plugs shall withstand an applied force of 0,5 N max. without being punched out.

This International Standard prescribes the following states of these holes:

Recognition Holes No. 1 and No. 3 shall be closed

Recognition Hole No. 2 shall be closed for Type A cartridges

Recognition Hole No. 2 shall be open for Type B cartridges

Recognition Hole No. 4 may be open or closed

Other combinations of the states of the Recognition Holes 1, 2 and 3 are reserved for future applications (see annex B).

6.8.3.2 Write-inhibit Hole

The position and dimensions of the Write-inhibit Hole shall be

d_4 = 2,5 mm ± 0,1 mm

L_{50} = 56,0 mm ± 0,3 mm

When the Write-inhibit Hole is open recording on the tape is inhibited, when it is closed recording is enabled.

The Write-inhibit Hole shall have the cross-section shown in cross-section F-F in figure 11 for Recognition Hole No. 1. One of the two cross-sections F-F shows the hole closed by means of a plug, the other shows it

Copyright International Organization for Standardization
Provided by IHS under license with ISO
No reproduction or networking permitted without license from IHS
Not for Resale

with the hole punched out. These plugs shall withstand an applied force of 0,5 N max without being punched out.

The case may have a movable element allowing the Write-inhibit Hole to be opened and closed. If present, this element shall be such that the state of Write-inhibit Hole is visible (see figure 3 as an example). Such an element shall be neither broken nor moved by a force smaller than 0,5 N.

Regardless of whether a plug or a movable element is used to select the open and closed states of the Write-inhibit Hole, the following dimensions from cross-section F-F shall define the closed and open states, respectively.

L_{52} = 1,0 mm ± 0,1 mm

L_{53} = 3,0 mm min.

6.8.3.3 Sub-datum holes

These holes are used to position the cartridge in the drive. Their position and dimensions shall be as follows.

- The hole seen below the Write-inhibit Hole in figure 11 shall have an elongated form and the same cross-section E-E as shown for the other hole.

  L_{54} = 45,5 mm ± 0,2 mm

  L_{55} = 3,5 mm $^{+\ 0,1}_{-\ 0,0}$ mm

  L_{56} = 2,50 mm $^{+\ 0,05}_{-\ 0,00}$ mm

- The position and dimensions of the other Sub-datum Hole shall be

  d_5 = 2,50 mm $^{+\ 0,05}_{-\ 0,00}$ mm

  d_6 = 1,0 mm min.

  L_{57} = 5,5 mm ± 0,1 mm

  L_{58} = 2,0 mm min.

  L_{59} = 1,2 mm min.

The edge of both Sub-datum Holes shall have a chamfer of

0,2 mm ± 0,1 mm.

6.8.4 Datum holes

The lower half has two Datum Holes also used to position the cartridge within the drive. One of them has an elongated form, the other is circular. Cross-section D-D shown for the latter also applies to the former. Their positions and dimensions shall be

L_{60} = 51,0 mm ± 0,1 mm

L_{61} = 2,80 mm $^{+\ 0,05}_{-\ 0,00}$ mm

L_{62} = 3,5 mm $^{+\ 0,1}_{-\ 0,0}$ mm

L_{63} = 3,0 mm min.

Copyright International Organization for Standardization
Provided by IHS under license with ISO
No reproduction or networking permitted without license from IHS
Not for Resale

d_7 = 2,80 mm $^{+\ 0,05}_{-\ 0,00}$ mm

The upper edge of both Datum Holes shall have a chamfer of 0,2 mm ± 0,1 mm.

6.8.5 Access room for tape guides

When the cartridge is inserted into the drive, tape guides in the drive pull out the tape toward the heads of the drive. The shape and dimensions of the access room provided by the cartridge for these tape guides shall be (see also 6.8.7.5):

L_{64} = 3,1 mm max.

L_{65} = 5,6 mm min.

L_{66} = 11,0 mm max.

L_{67} = 7,0 mm $^{+\ 0,7}_{-\ 0,0}$ mm

L_{68} = 6,7 mm min.

α = 45° ± 1°

L_{69} = 47,9 mm min.

L_{70} = 3,30 mm $^{+\ 0,00}_{-\ 0,15}$ mm

6.8.6 Holes for accessing the hubs

The lower half has two holes through which the spindles of the drive can access the hubs when the slider is in the open position. The positions and dimensions of these holes shall be

d_8 = 9,0 mm ± 0,1 mm

L_{71} = 29,00 mm ± 0,15 mm

L_{72} = 10,5 mm ± 0,1 mm

L_{73} = 30,0 mm ± 0,1 mm

6.8.7 Internal structure of the lower half (figure 12)

In figure 12 the different elements of the inside of the lower half are shown. There shall be a locking mechanism for the hubs to prevent them from rotating when the lid is in the closed position. The design of this locking mechanism is not specified by this International Standard, thus it is not shown in figure 12. Locking and unlocking of the hubs shall depend upon the position of the lid as specified in 6.13.

6.8.7.1 Diameter of the wound tape

The diameter of the tape wound on a hub shall be

d_9 = 36,5 mm max.

6.8.7.2 Tape wind

The magnetic surface of the tape shall face outwards.

6.8.7.3 Tape motion

The forward direction of tape motion is from the left side of the cartridge to its right side (see figures 1 and 2).

Copyright International Organization for Standardization
Provided by IHS under license with ISO
No reproduction or networking permitted without license from IHS
Not for Resale

6.8.7.4 Guide posts

The tape shall pass around two guide posts in the cartridge, the axes of which are perpendicular to Reference Plane Z and pass through the centres of the Datum Holes. The positions and dimensions of these guide posts shall be

- their positions are determined by those of the centres of the Datum Holes,
- their cross-section shall be circular with a radius

  R_4 = 3,0 mm ± 0,1 mm

  over an angle of 180° in clockwise sense starting at angle

  ρ = 45° ± 1°
- their cross-section over the other half of 180° is not specified by this International Standard.

6.8.7.5 Position of the tape in the case (view A)

When the tape runs from one guide post to the other it shall remain between two planes parallel to Reference Plane Z. The distance of these planes to Reference Plane Z shall be

L_{74} = 1,4 mm min.

L_{75} = 6,4 mm max.

The design centre for the position of the tape centreline is

L_{76} = 3,9 mm

The height of the access room specified in 6.8.5 for the tape guides shall be

$$L_{77} = 8{,}0 \text{ mm} \begin{matrix} +0{,}6 \\ -0{,}0 \end{matrix} \text{ mm}$$

6.8.7.6 Tape path zone

When the cartridge is inserted into the drive, the tape is pulled outside the case by tape guides as mentioned above. It is then no longer in contact with the guide posts. The tape path zone of the case is the zone in which the tape must be able to move freely. This zone is defined by

L_{78} = 5,5 mm ± 0,1 mm

L_{79} = 56,5 mm ± 0,3 mm

L_{80} = 8,0 mm ± 0,2 mm

6.8.8 Light path (figure 12)

As specified in 6.7 there is a lower window in the right and left sides of the case through which light having passed through the tape can pass and fall onto a detector of the drive. In order to ensure that the corresponding light path is not obstructed by inner elements of the case, its configuration in this zone shall be as follows.

The position and dimensions of the lower window are specified by L_{30} and L_{31} (see figure 9). The dimensions

L_{81} = 1,5 mm max.

L_{82} = 5,0 mm min.

ensure that no elements of the case obstruct the light path.

Copyright International Organization for Standardization
Provided by IHS under license with ISO
No reproduction or networking permitted without license from IHS
Not for Resale

6.8.9 Support Areas (figure 13)

When the cartridge is inserted into the drive and held in position by forces perpendicular to Reference Plane Z acting on the Holding Areas (see 6.4), it shall be supported by three Support Areas A', B', C' on its bottom side, shown shaded in figure 13. The position and dimensions of these areas shall be as follows.

- Areas A' and B' are not specified by this International Standard because they depend on parts of the lower half for which this Standard does not specify requirements.
- Area C' shall be defined by

  L_{83} = 1,0 mm ± 0,1 mm

  L_{84} = 49,0 mm ± 0,3 mm

6.8.10 Datum Areas (figure 13)

There shall be two annular Datum Surfaces A and B and one circular such surface C. All three Datum Areas shall lie in Reference Plane Z. Their position and dimensions shall be

- Datum Area A shall be centred on the intersection of Reference Planes X, Y and Z, its inner diameter shall be d_7 (see 6.8.4 and figure 11), its outer diameter shall be

  d_{10} = 5,0 mm ± 0,1 mm

- Datum Area B shall be centred on the intersection of Reference Planes X and Z at a distance L_{60} (see 6.8.4 and figure 11) from the centre of Datum Area A. Its inner dimensions shall be L_{61} and L_{62}, its outer diameter shall be d_{10}.
- Datum Area C shall be centred on a point defined by

  L_{85} = 42,0 mm ± 0,3 mm

  L_{86} = 25,5 mm ± 0,3 mm

Its diameter shall be d_{10}.

6.8.11 Relationship between Support and Datum Areas and Reference Plane Z (figure 14)

Support Area A' shall be coplanar with Datum Area A within 0,1 mm.

Support Area B' shall be coplanar with Datum Area B within 0,1 mm.

Support Area C' shall be parallel to Reference Plane Z within 0,1 mm. It shall be at a distance

L_{87} = 1,10 mm ± 0,05 mm

from Reference Plane Z.

6.9 Hubs (figures 15 and 16)

The dimensions of the hubs shall be

d_{11} = 6,60 mm $^{+\ 0,08}_{-\ 0,00}$ mm

d_{12} = 8,8 mm $^{+\ 0,0}_{-\ 0,1}$ mm

d_{13} = 15,00 mm ± 0,05 mm

β = 60° ± 1°

γ = 45° ± 1°

Copyright International Organization for Standardization
Provided by IHS under license with ISO
No reproduction or networking permitted without license from IHS
Not for Resale

$L_{88} = 2{,}5$ mm $^{+\ 0{,}1}_{-\ 0{,}0}$ mm

$L_{89} = 2{,}60$ mm $^{+\ 0{,}20}_{-\ 0{,}00}$ mm

The two cylindrical surfaces with diameters d_{11} and d_{13} shall be co-axial within 0,05 mm.

The torque necessary to rotate the hub with a partially or fully wound tape shall be 0,000 2 N·m max.

6.10 Leader and trailer attachment

The material of the leader and trailer and their attachment to the hubs and to the tape shall be such that when subjected to a force of 5 N max. they will neither break nor be detached from the hubs or the tape.

6.11 Interface between the hubs and the drive spindles (figure 17)

The interface between the hubs and the spindles, shown in figure 17 in cross-section, is specified in terms of the following relationships:

$d_{15} - d_{14} =$ 1,2 mm max.
1,0 mm min.

$L_{91} - L_{90} =$ 1,3 mm max.

NOTE 7- It is expected that the top of the drive spindle will not penetrate within the hub beyond a distance $L_d = 7{,}65$ mm max. above Reference Plane Z.

6.12 Opening of the lid (figure 18)

When the lid is opened its lower front edge moves along an arc of a circle with radius

$R_5 = 9{,}6$ mm ± 0,2 mm

The centre of rotation is defined by L_{17} and L_{21}. The end position of the lid, i.e. when it is fully open, is defined by

$L_{92} = 10{,}9$ mm ± 0,2 mm

$L_{93} = 0{,}3$ mm ± 0,1 mm

$L_{94} = 6{,}3$ mm ± 0,2 mm

The force F required to open the lid shall not exceed 1,2 N. It shall be applied at a distance

$L_{95} = 5{,}0$ mm ± 0,1 mm

measured parallel to Reference Plane Z from the centre of rotation of radius R_5 (see also annex C).

6.13 Release of the hub locking mechanism (figures 19 and 20)

As mentioned in 6.8.7 the design of the locking mechanism for the hubs is not specified by this International Standard, except that it shall be connected to the lid so that the hubs are locked or unlocked as a function of the angular position of the lid.

When the lid rotates from the closed to the open position (clockwise as seen in figures 19 and 20) the hubs shall remain locked as long as the lid has not reached the position defined by:

$L_{96} = 7{,}0$ mm

$L_{97} = 7{,}5$ mm ± 0,2 mm

as shown in figure 19.

The hubs shall be completely released as soon as the lid has reached the position defined by:

Copyright International Organization for Standardization
Provided by IHS under license with ISO
No reproduction or networking permitted without license from IHS
Not for Resale

L_{98} = 10,3 mm

L_{99} = 6,6 mm ± 0,2 mm

as shown in figure 20.

6.14 Label areas (figures 21 and 22)

On the top and rear sides of the case there shall be an area on which adhesive labels can be placed. The dimensions of these areas shall be

L_{100} = 28,9 mm max.

L_{101} = 5,2 mm min.

L_{102} = 43,4 mm max.

L_{103} = 39,4 mm max.

L_{104} = 8,8 mm max.

R_6 = 0,5 mm min.

Copyright International Organization for Standardization
Provided by IHS under license with ISO
No reproduction or networking permitted without license from IHS
Not for Resale

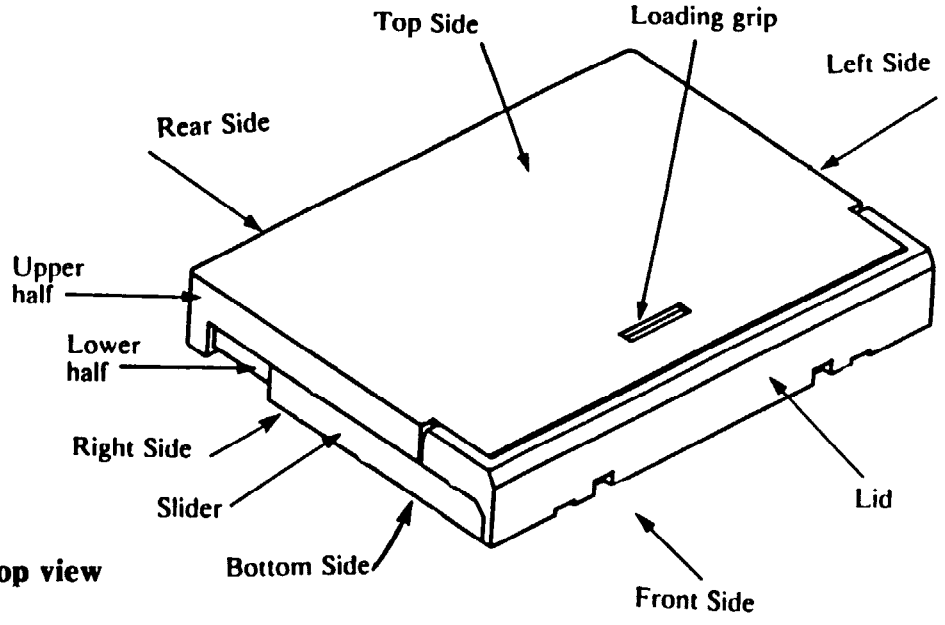

Figure 1 - Top view

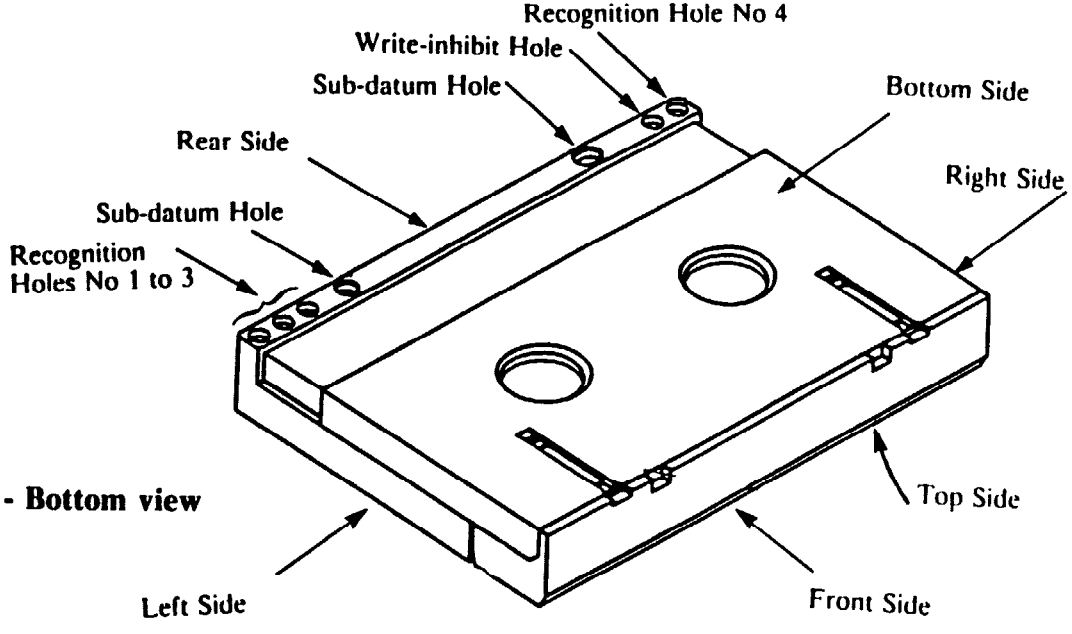

Figure 2 - Bottom view

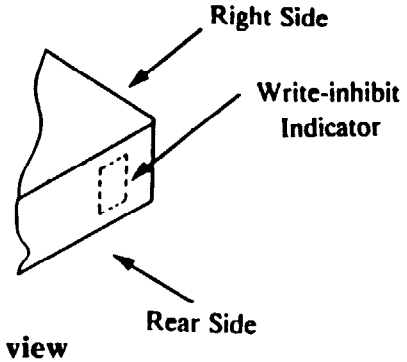

Figure 3 - Partial view of the rear side

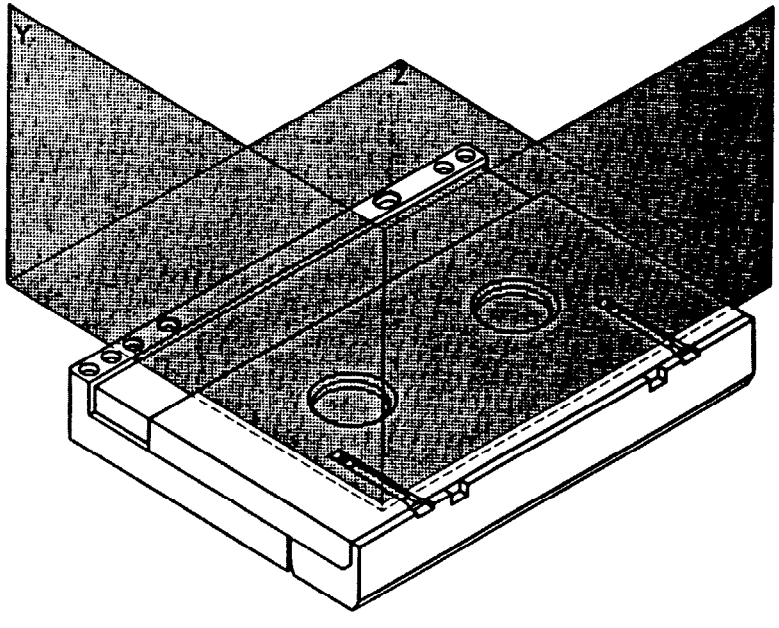

Figure 4 - Reference Planes X, Y, Z

Copyright International Organization for Standardization
Provided by IHS under license with ISO
No reproduction or networking permitted without license from IHS
Not for Resale

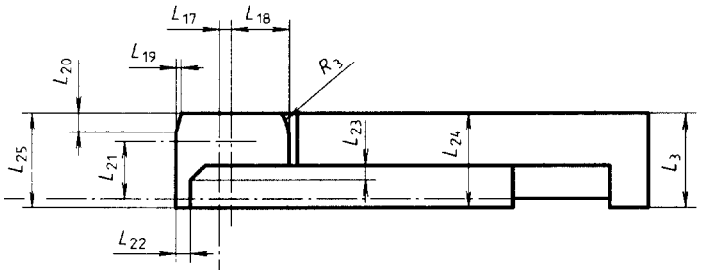

Figure 7 - Left side, lid closed

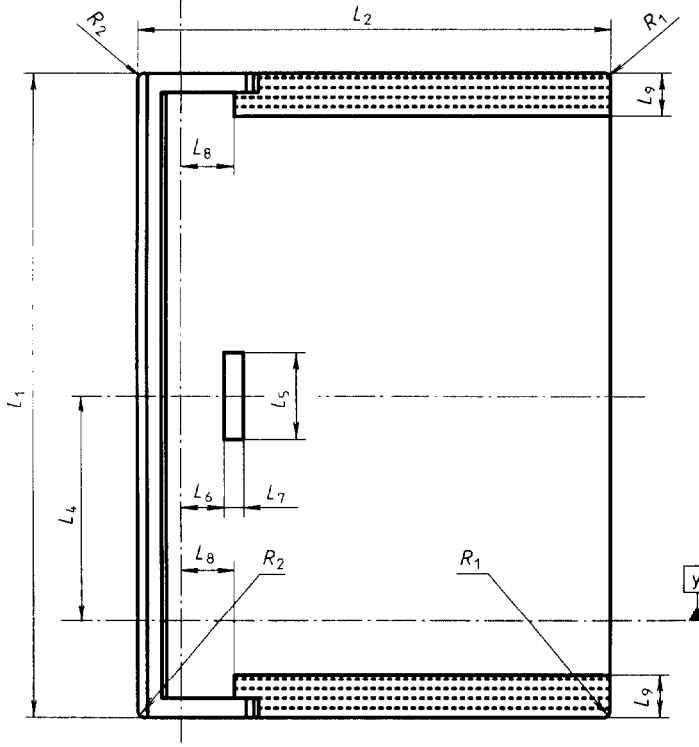

Figure 6 - Top side, lid closed

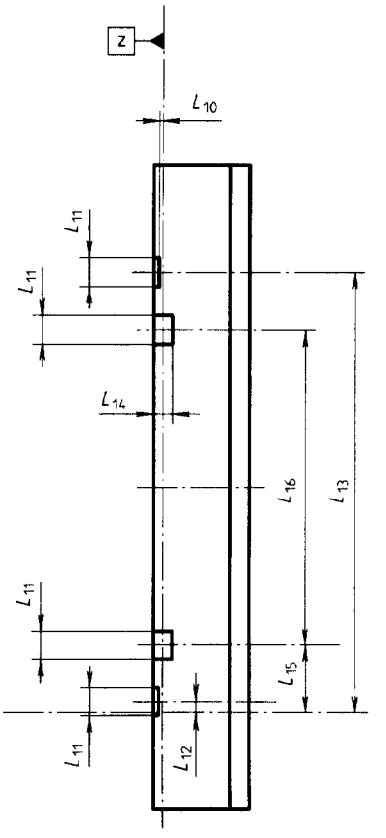

Figure 5 - Front side, lid closed

Copyright International Organization for Standardization
Provided by IHS under license with ISO
No reproduction or networking permitted without license from IHS
Not for Resale

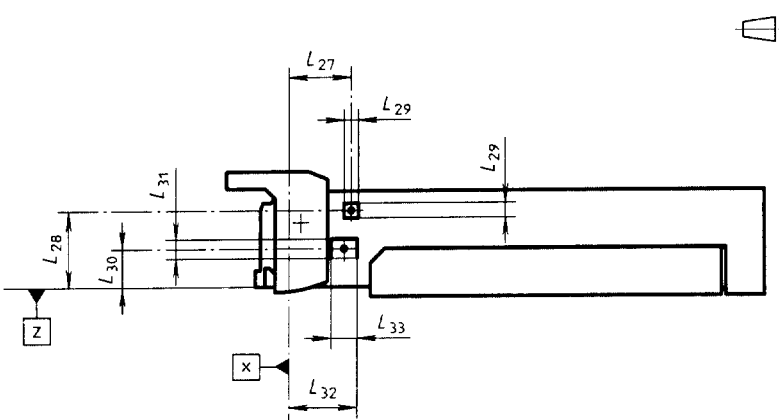

Figure 9 - Left side, lid open

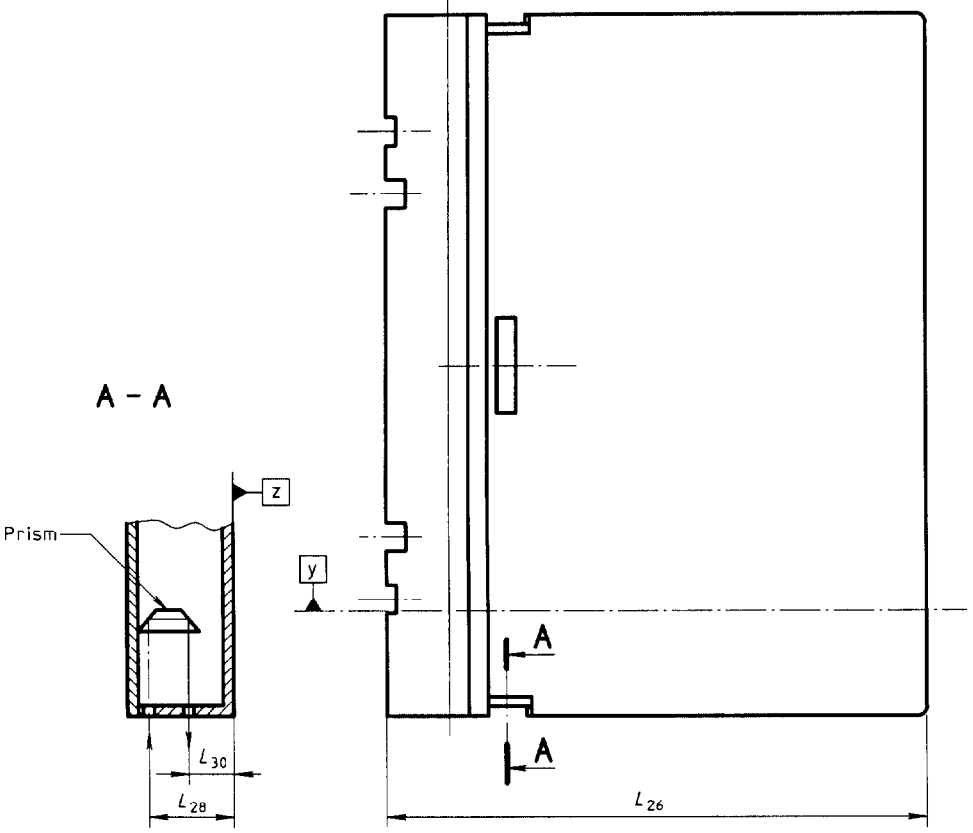

Figure 8 - Top side, lid open

Copyright International Organization for Standardization
Provided by IHS under license with ISO
No reproduction or networking permitted without license from IHS
Not for Resale

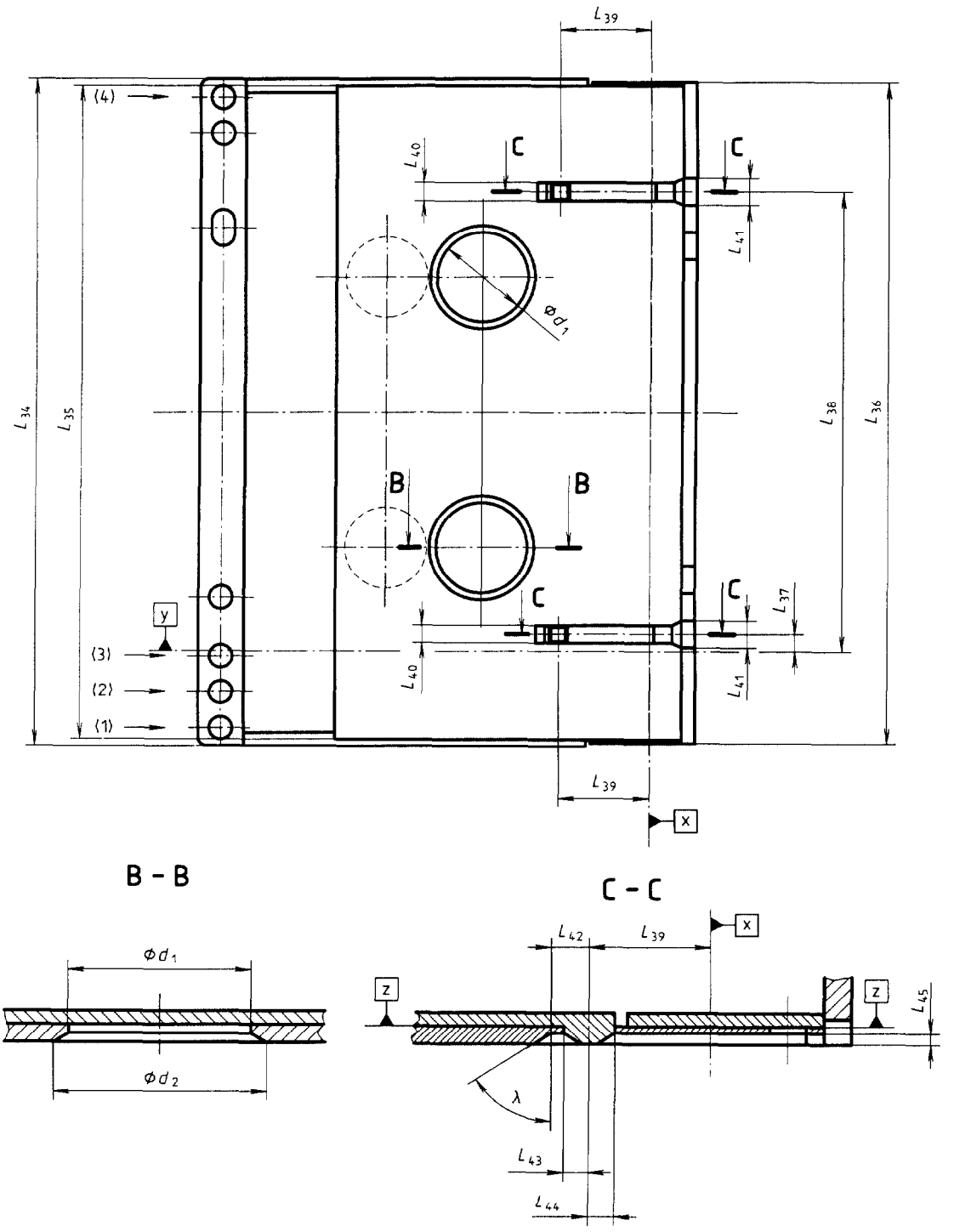

Figure 10 - Bottom side, lid closed

Copyright International Organization for Standardization
Provided by IHS under license with ISO
No reproduction or networking permitted without license from IHS
Not for Resale

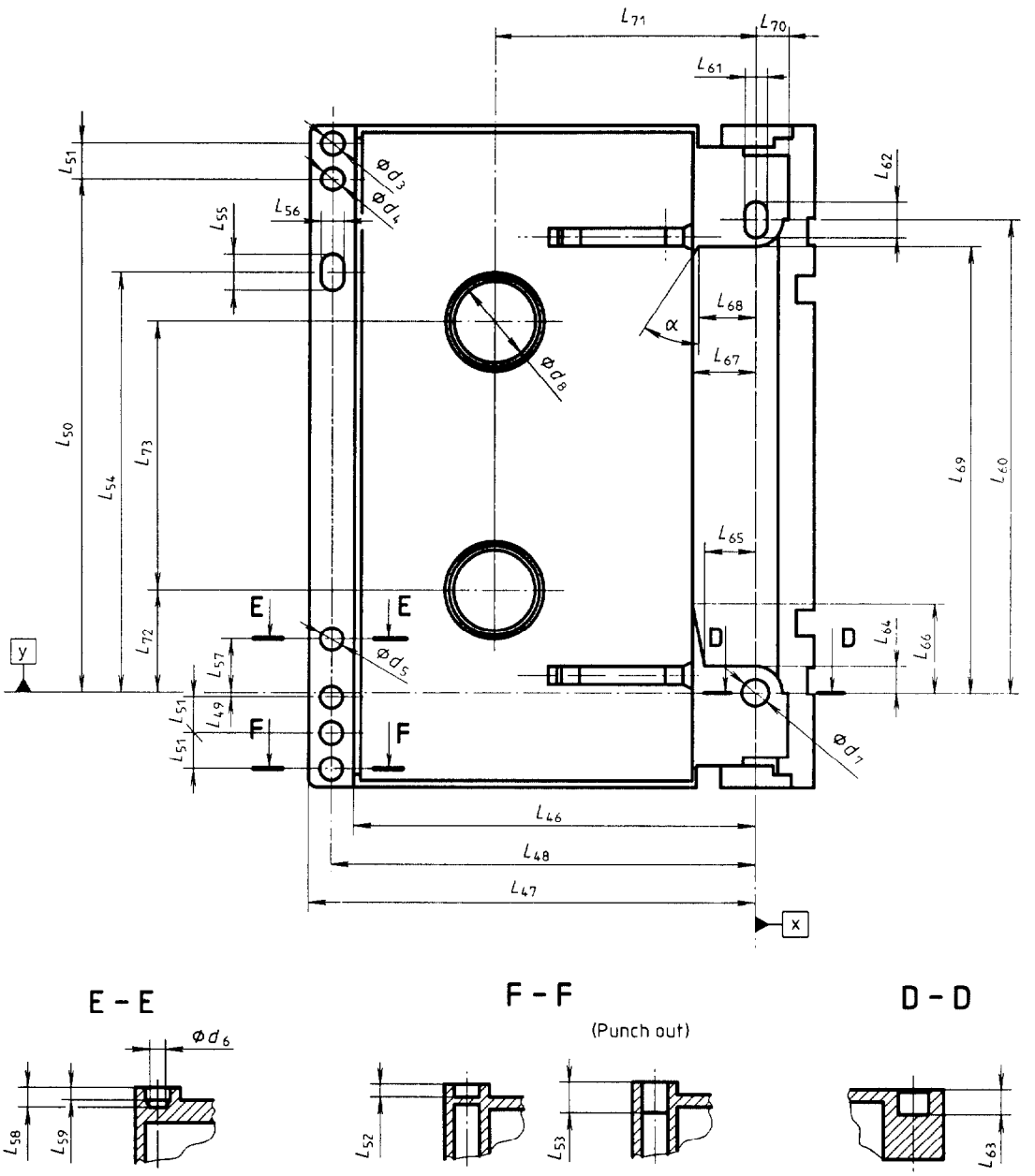

Figure 11 – Bottom side, lid open

Copyright International Organization for Standardization
Provided by IHS under license with ISO
No reproduction or networking permitted without license from IHS
Not for Resale

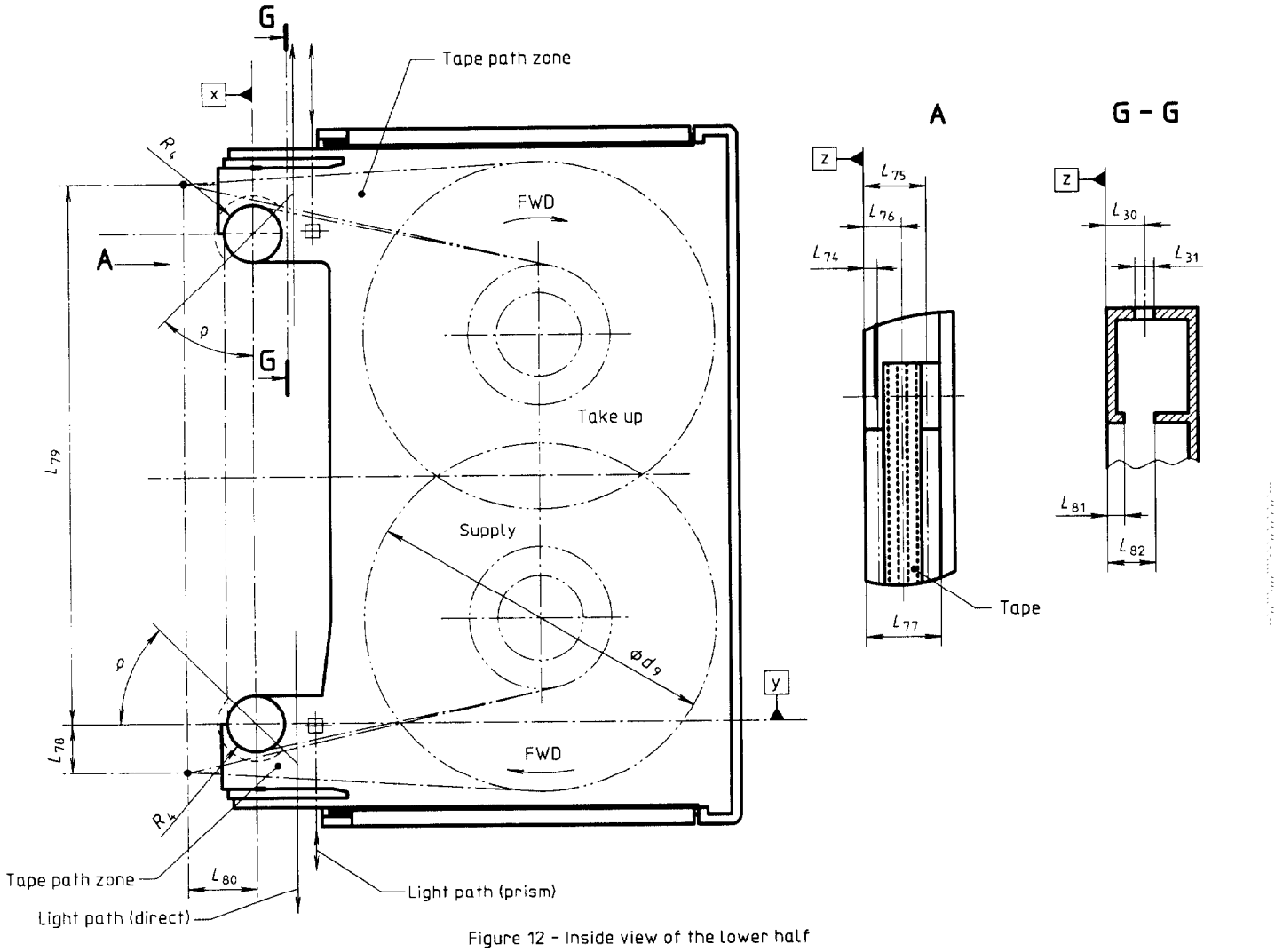

Figure 12 - Inside view of the lower half

Copyright International Organization for Standardization
Provided by IHS under license with ISO
No reproduction or networking permitted without license from IHS
Not for Resale

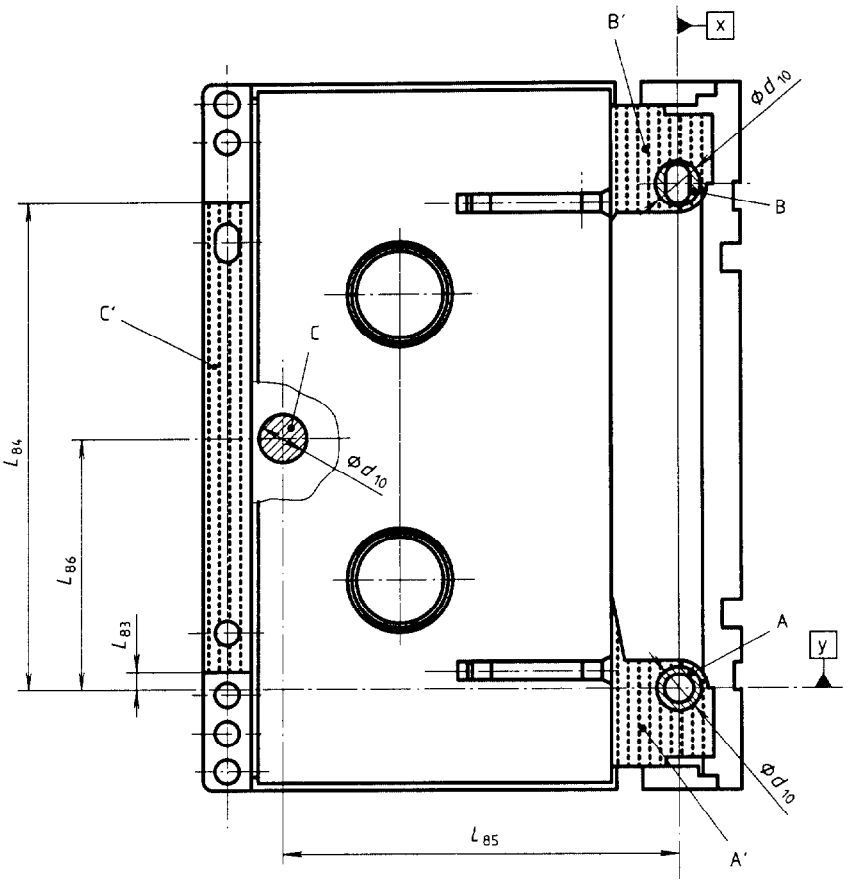

Figure 13 – Bottom side, lid and slider in open position

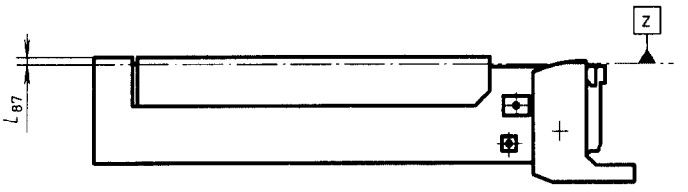

Figure 14 – Left side, lid open

Copyright International Organization for Standardization
Provided by IHS under license with ISO
No reproduction or networking permitted without license from IHS
Not for Resale

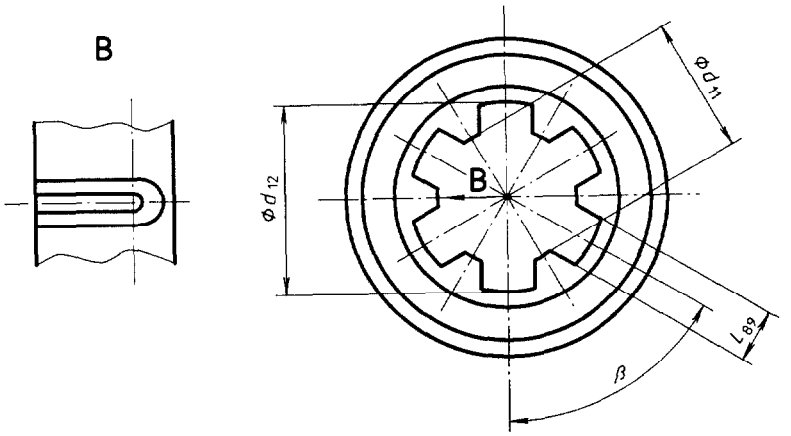

Figure 15 - Top view of a hub

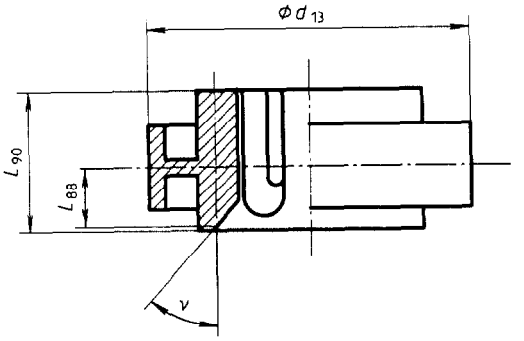

Figure 16 - Side view of a hub

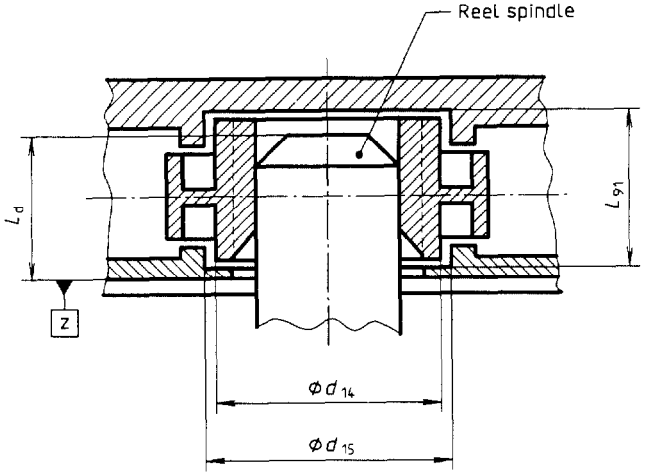

Figure 17 - Interface with the drive spindle

Copyright International Organization for Standardization
Provided by IHS under license with ISO
No reproduction or networking permitted without license from IHS
Not for Resale

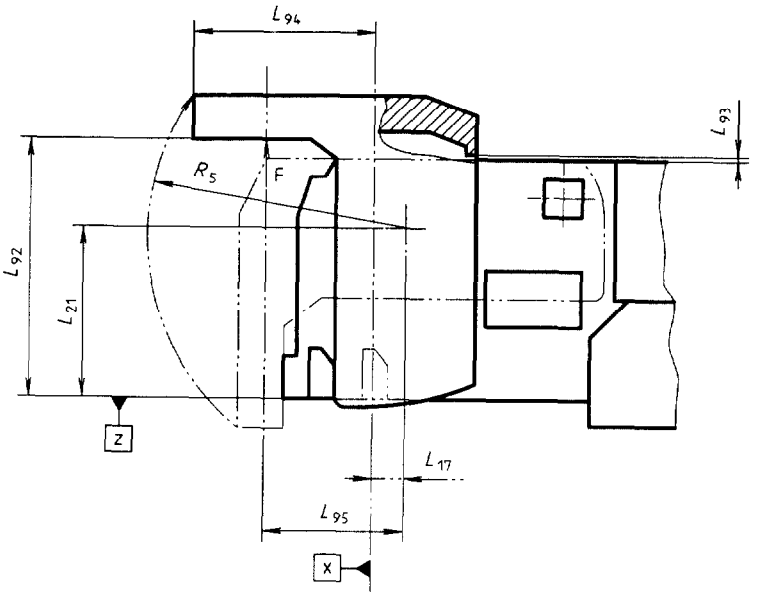

Figure 18 - Lid in completely open position

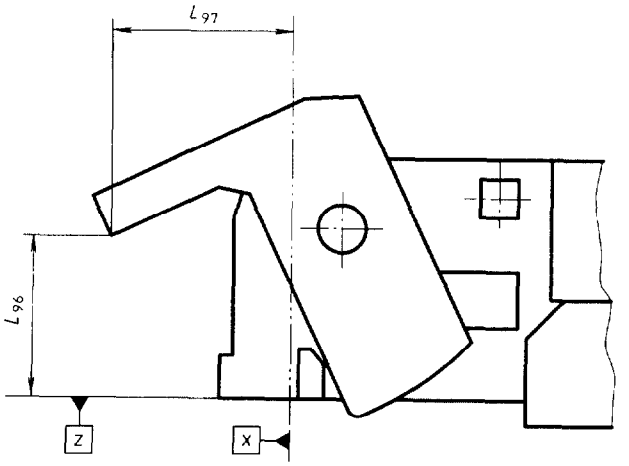

Figure 19 - Extreme position of the lid for which the hubs are still locked

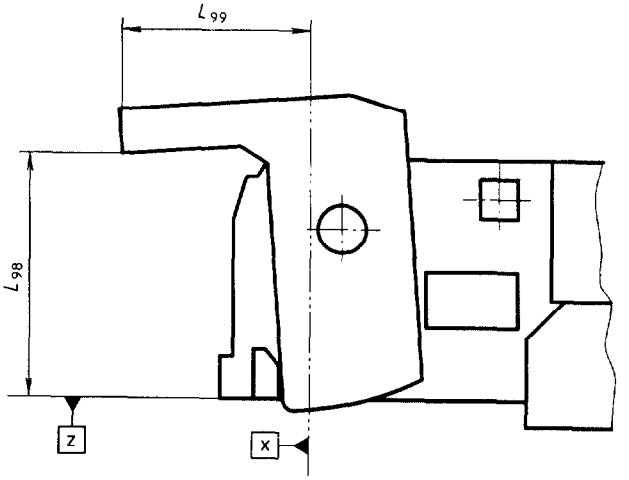

Figure 20 - Minimum position of the lid for which the hubs are completely unlocked

Copyright International Organization for Standardization
Provided by IHS under license with ISO
No reproduction or networking permitted without license from IHS
Not for Resale

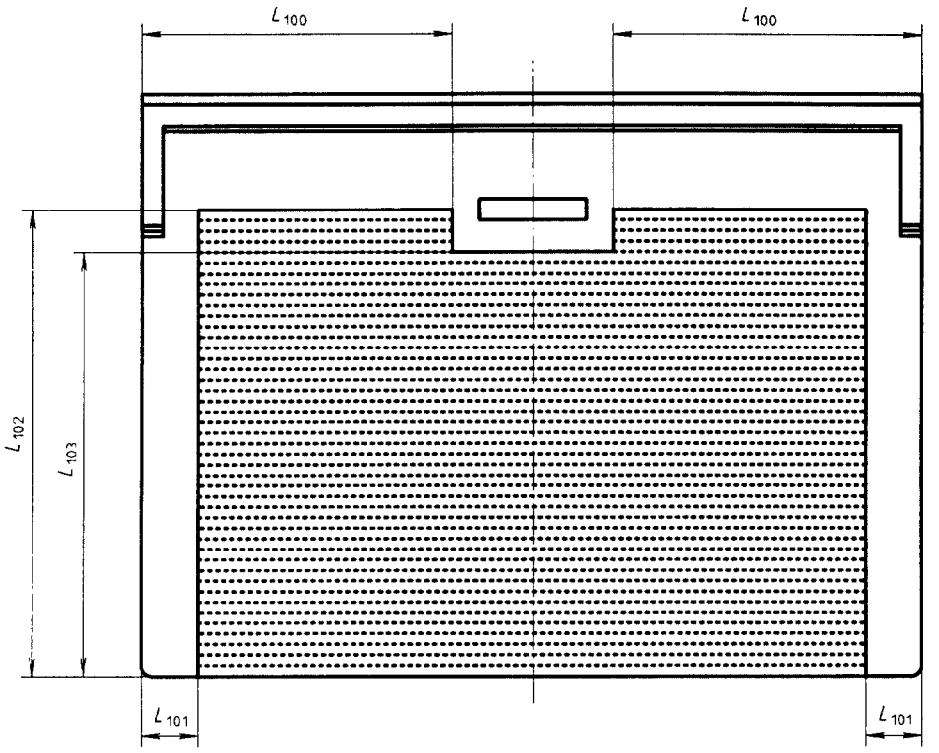

Figure 21 - Top side, label area

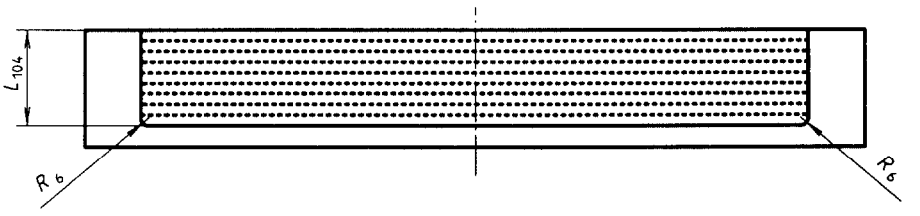

Figure 22 - Rear side, label area

Copyright International Organization for Standardization
Provided by IHS under license with ISO
No reproduction or networking permitted without license from IHS
Not for Resale

Section 3 - Requirements for the unrecorded tape

7 Mechanical, physical and dimensional characteristics of the tape

7.1 Materials

The recordable area of the tape shall consist of a base material (oriented polyethylene terephthalate or its equivalent) coated on one side with a strong yet flexible layer of ferromagnetic material. The back surface may be coated.

The leader and trailer tapes shall consist of a translucent length of the same or equivalent base material without the ferromagnetic coating or the back coating.

7.2 Tape length

7.2.1 Length of magnetic tape

The length of tape between PBOT and PEOT shall be

For Type A: between 3,0 m and 60,5 m

For Type B: between 3,0 m and 92,0 m.

7.2.2 Length of leader and trailer tapes

The length of the leader and trailer tapes shall be 60 mm ± 5 mm.

7.3 Tape width

The width of the magnetic tape and of the leader and trailer tapes shall be

$$3{,}81 \text{ mm} \quad {}^{+\,0{,}00}_{-\,0{,}02} \text{ mm}$$

The width shall be measured across the tape from edge to edge when the tape is under a tension of 0,18 N max.

7.4 Discontinuities

Between PBOT and PEOT there shall be no discontinuities such as those produced by tape splicing or perforations.

7.5 Total thickness

The total thickness of the magnetic tape at any point shall be

For Type A: 13 µm ± 1 µm

For Type B: 9,0 µm ± 0,8 µm.

7.6 Longitudinal curvature

The radius of curvature of the edge of the tape shall not be less than 33 m.

Procedure:

Allow a 1 m length of tape to unroll and assume its natural curvature on a flat smooth surface. Measure the deviation from a 1 m chord. The deviation shall not be greater than 3,8 mm. This deviation corresponds to the minimum radius of curvature of 33 m if measured over an arc of a circle.

Copyright International Organization for Standardization
Provided by IHS under license with ISO
No reproduction or networking permitted without license from IHS
Not for Resale

7.7 Cupping

The departure across the width of tape from a flat surface shall not exceed 0,5 mm.

Procedure:

Cut a 1,0 m ± 0,1 m length of tape. Condition it for a minimum of 3 h in the test environment by hanging it so that the coated surface is freely exposed to the test environment. From the centre portion of the conditioned tape cut a test piece of 25 mm length. Stand the test piece on its end in a cylinder which is at least 25 mm high with an inside diameter of 4,1 mm ± 0,2 mm. With the cylinder standing on an optical comparator measure the cupping by aligning the edges of the test piece to the reticle and determining the distance from the aligned edges to the corresponding surface of the test piece at its centre.

7.8 Coating adhesion

The force required to peel any part of the coating from the tape base material shall not be less than 0,05 N.

Procedure:

Take a test piece of the tape approximately 380 mm long and scribe a line through the recording coating across the width of the tape 125 mm from one end. Using a double-sided pressure sensitive tape, attach the full width of the test piece to a smooth metal plate, with the recording surface facing the plate, as shown in the figure below. Fold the test piece over 180°, attach the metal plate and the free end of the test piece to the jaws of a universal testing machine and set the speed of the jaw separation to 254 mm per min. Note the force at which any part of the coating first separates from the base material. If this is less than 0,05 N, the test has failed. If the test piece peels away from the double-sided pressure sensitive tape before the force exceeds 0,05 N, an alternative type of double-sided pressure sensitive tape shall be used. If the back surface of the tape is coated, repeat the procedure for the back coating.

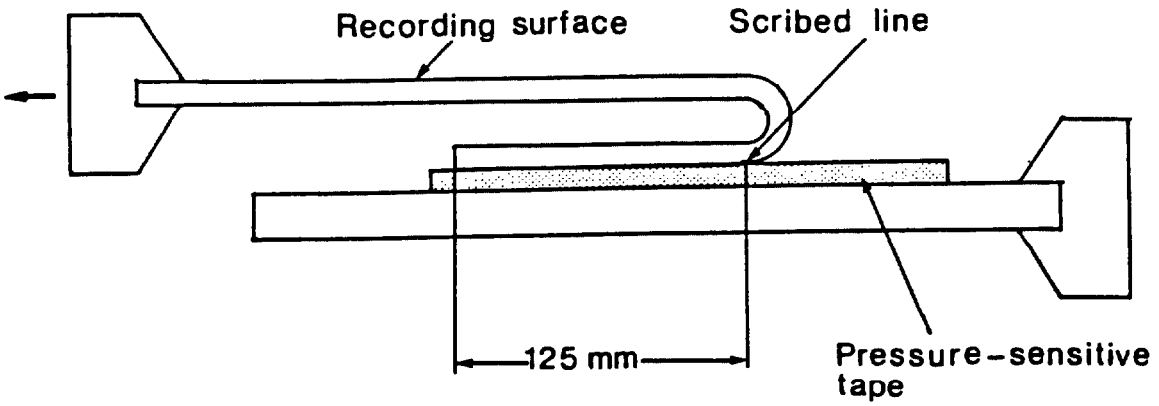

Figure 23 - Setup for measuring coating adhesion

Copyright International Organization for Standardization
Provided by IHS under license with ISO
No reproduction or networking permitted without license from IHS
Not for Resale

7.9 Layer-to-layer adhesion

There shall be no tendency for the test piece to stick or for the coating to peel.

Procedure:

Attach one end of a test piece of magnetic tape of length 1 m to the surface of a glass tube of diameter 36 mm.

Wind the tape on to the tube at a tension of 1,1 N.

Store the wound test piece in a temperature of 45 °C ± 3 °C and a relative humidity of 80 % for 4 h.

Store for a further 24 h in the Testing Environment.

Apply a force of 0,1 N to the free end of the test piece and allow it to unwind slowly.

7.10 Tensile strength

Measurements shall be made in accordance with ISO/R 527. The length of the test piece shall be 200 mm. The rate of elongation for all tensile tests shall be 100 mm/min - ISO/R 527, Rate D.

7.10.1 Breaking strength

The breaking strength shall be

For Type A: not less than 9 N
For Type B: not less that 6 N.

Procedure:

Load the test piece until the breaking point is reached. The force required to reach that point is the breaking strength of the tape.

7.10.2 Yield strength

The yield strength shall be

For Type A: not less than 1,4 N
For Type B: not less than 0,9 N.

The yield strength is the force required to produce a 3 % elongation of the tape.

7.11 Residual elongation

The residual elongation, expressed as a percentage of the original length, shall be less than 0,03 %.

Procedure:

Measure the original length of a test piece of approximately 1 m with an applied tensile force of less than 0,05 N.

Apply 3 min an additional force of

For Type A: 1,5 N
For Type B: 1,0 N.

Remove the additional force and measure the length of the test piece after a further 3 min.

7.12 Electrical resistance of coated surfaces

The electrical resistance of the recording surface of the magnetic tape, measured on any square area of tape, shall be within the ranges

10^5 Ω to 5 x 10^8 Ω for non-back coated tape

Copyright International Organization for Standardization
Provided by IHS under license with ISO
No reproduction or networking permitted without license from IHS
Not for Resale

10^5 Ω to 5 x 10^{12} Ω for back-coated tape.

The electrical resistance of the back-coating, if present, measured on any square area of tape, shall be less than 9 x 10^8 Ω.

Procedure:

Condition a test piece of tape in the Test Environment for 24 h. Position the test piece over two 24-carat gold-plated semicircular electrodes having a radius r = 10 mm and a finish of at least N4, so that the recording surface is in contact with each electrode. The electrodes shall be placed parallel to the ground and parallel to each other and at a distance d = 3,81 mm between their centres. Apply a force F of 0,25 N to each end of the test piece. Apply a d.c. voltage of 100 V ± 10 V across the electrodes and measure the resulting current flow. From this value determine the electrical resistance.

Repeat for a total of five positions along the test piece and average the five resistance readings.

For back-coated tape repeat the procedure with the back-coating in contact with the electrodes.

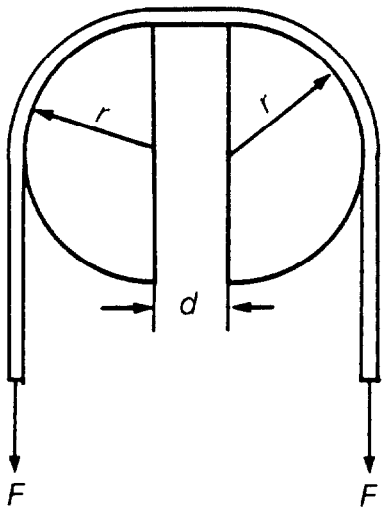

Figure 24 - Setup for measuring the electrical resistance

When mounting the test piece ensure that no conducting paths exist between the electrodes except that through the coating under test.

NOTE 8 - Particular attention should be given to keeping surfaces clean.

7.13 Light transmittance of the tape

The light transmittance of the magnetic tape shall be less than or equal to 5 %.

The light transmittance of the leader and trailer tapes shall be greater than or equal to 60 %.

The method for measuring light transmittance is given in annex D.

8 Magnetic recording characteristics

The magnetic recording characteristics shall be defined by the testing requirements given below.

Copyright International Organization for Standardization
Provided by IHS under license with ISO
No reproduction or networking permitted without license from IHS
Not for Resale

When performing these tests, the output or resultant signal shall be measured on the same relative pass for both a tape calibrated to the Master Standard Reference Tape and the tape under test (read-while-write or first forward-read-pass) on the same equipment.

The following conditions shall apply to the testing of all magnetic recording characteristics, unless otherwise stated.

Tape condition	: a.c. erased
Diameter of scanner	: 30,00 mm $^{+\ 0,05}_{-\ 0,00}$ mm
Rotational speed of scanner	: 2 000,0 rpm ± 0,2 rpm
Tape speed	: 8,15 mm/s ± 0,04 mm/s
Tape tension	: 0,10 N ± 0,01 N, measured at the input to the scanner
Test tracks	: positive azimuth
Write gap length	: 0,25 µm ± 0,03 µm
Physical recording densities	: 83,4 ftpmm, 750,6 ftpmm, 500,4 ftpmm, 1 001 ftpmm, 1 501 ftpmm, 3 002 ftpmm (specified in each test)
Recording current	: Test Recording Current
Recording waveform	: Square wave
Read track width	: 20 µm ± 2 µm
Write track width	: equal to, or greater than, the read track width
Read output level	: taken at the appropriate fundamental frequency only

8.1 Optimum Recording Field

The Optimum Recording Field shall be between 80 % and 126 % of the Reference Recording Field.

Traceability to the Reference Recording Field is provided by the calibration factor supplied with each Secondary Standard Reference Tape.

8.2 Signal Amplitude

The Average Signal Amplitude at the physical recording density of 3 002 ftpmm shall be between 70 % and 160 % of that for the Master Standard Reference Tape.

The Average Signal Amplitude at the physical recording density of 83,4 ftpmm shall be between 70 % and 160 % of that for the Master Standard Reference Tape.

Traceability to the Average Signal Amplitudes of the Master Standard Reference Tape is provided by the calibration factors supplied with each Secondary Standard Reference Tape.

8.3 Resolution

The ratio of the Average Signal Amplitude at the physical recording density of 3 002 ftpmm to that at the physical recording density of 750,6 ftpmm shall be between 80 % and 140 % of the same ratio for the Master Standard Reference Tape.

For the physical recording densities of 1 001 ftpmm and 83,4 ftpmm the ratio shall be between 70 % and 126 % of the same ratio for the Master Standard Reference Tape.

Copyright International Organization for Standardization
Provided by IHS under license with ISO
No reproduction or networking permitted without license from IHS
Not for Resale

Traceability to the resolutions for the Master Standard Reference Tape is provided by the calibration factors supplied with each Secondary Standard Reference Tape.

8.4 Overwrite

Overwrite is the ratio of the Average Signal Amplitude of the residual of a low density recording after overwriting at a higher density to the Average Signal Amplitude of the original low density recording.

Traceability to the overwrite ratios for the Master Standard Reference Tape is provided by the calibration factors supplied with each Secondary Standard Reference Tape.

8.4.1 Physical recording densities of 750,6 ftpmm and 3 002 ftpmm

8.4.1.1 Procedure

a.c.-erase the tape. Record at the physical density of 750,6 ftpmm and measure the Average Signal Amplitude. Overwrite at the physical recording density of 3 002 ftpmm and measure the Average Signal Amplitude of the residual 750,6 ftpmm signal. Repeat for the Secondary Standard Reference Tape.

8.4.1.2 Requirements

$$\text{The ratio} \quad \frac{\text{Residual Average Signal Amplitude at 750,6 ftpmm after overwriting}}{\text{Average Signal Amplitude of the original recording at 750,6 ftpmm}}$$

shall be less than 140% of the same ratio for the Master Standard Reference Tape.

8.4.2 Physical recording densities of 83,4 ftpmm and 1 001 ftpmm

8.4.2.1 Procedure

Repeat 8.4.1.1 for these densities.

8.4.2.2 Requirements

The ratio shall be less than 126 % of the same ratio for the Master Standard Reference Tape.

8.5 Ease of erasure

When a tape has been recorded at 750,6 ftpmm with the Test Recording Current and then passed through a longitudinal steady erasing field of 198 900 A/m, any remaining signal shall not exceed 3 % of the Standard Reference Amplitude for that density. The erasing field shall be reasonably uniform, for example, the field in the middle of a solenoid. This measurement shall be made with a band pass filter passing at least the first three harmonics.

8.6 Tape quality

8.6.1 Missing pulses

A missing pulse is a loss of read signal amplitude. A missing pulse exists when the base-to-peak read signal is 50 %, or less, of half the Average Signal Amplitude for the recording density of 1 501 ftpmm on the same tape.

8.6.2 Missing pulse zone

A missing pulse zone commences with a missing pulse and ends when 5 consecutive flux transitions are detected or when a length of 0,120 mm of track has been measured. Any further missing pulse results in a further missing pulse zone.

Copyright International Organization for Standardization
Provided by IHS under license with ISO
No reproduction or networking permitted without license from IHS
Not for Resale

A missing pulse zone does not continue from one track to the next.

The missing pulse zone rate shall be less than one in $7,2 \times 10^4$ flux transitions and applies to both positive and negative azimuth tracks.

8.7 Signal-to-Noise Ratio (S/N) characteristic

The Signal-to-Noise Ratio is the average rms read signal amplitude divided by the average integrated rms noise amplitude, and expressed in decibels.

$$S/N = 20 \lg \frac{\text{Average rms read signal amplitude}}{\text{Average integrated rms noise amplitude}}$$

Requirement

The S/N for the tape under test (S/N_{tape}) shall be better than -3 dB relative to the S/N for the Master Standard Reference Tape (S/N_{MSRT}) when measured according to the procedure defined in annex E.

Traceability to the (S/N_{MSRT}) is provided by the calibration factor supplied with each Secondary Standard Reference Tape.

Section 4 - Requirements for an interchanged tape

9 Format

9.1 General

The smallest collection of data supported by the format is a Record. A Record is the smallest distinct set of data bytes supplied, e.g. from a host, for processing and recording by a tape drive system, and the smallest distinct set of data to be read from tape, reprocessed and made available, e.g. to a host, by a tape drive system. Two types of Record are supported, namely Processed Records and Unprocessed Records.

A recorded tape shall contain Processed Records, and may also contain Separator Marks and Unprocessed Records. Processed Records are contained within logical objects which are referred to, by this International Standard, as Entities. Separator Marks may be used by the host to indicate the logical separation(s) of the data within a structuring scheme.

Entities, Unprocessed Records and Separator Marks are collected into groups. An index within each group describes that group's contents. A series of transformations, namely randomizing, interleaving, blocking, the generation and inclusion of two Reed-Solomon error correcting codes, and the translation of bytes to Channel bits, is applied to each group prior to recording.

Each group is recorded on a group of tracks. The part of each track in which the user data, Separator Marks and associated information are recorded is called the Main Zone of the track. Additional information about the contents of the group, the location of the track(s) and the contents of the track(s) is recorded in two parts of each track called Sub Zones. The two Sub Zones together constitute the Sub Data Area of the track.

In the following description all operations on the data received from the host computer, including the use of error detecting and correcting codes, but excluding Processing, are described. Then the method of recording on the tape and the tape layout itself will be described. However, because of the inherent characteristics of this format, where required, advance references to the tape layout will also be made in the course of the description of the operations on the data.

Copyright International Organization for Standardization
Provided by IHS under license with ISO
No reproduction or networking permitted without license from IHS
Not for Resale

9.2 Basic Groups

The data to be recorded shall be grouped in Basic Groups of 126 632 bytes. Each Basic Group shall be identified by a running number allocated consecutively starting with zero. In each Basic Group the bytes are identified by a running number from 1 to 126 632.

The structure of Basic Group No. 0 is not specified by this International Standard. The data for this group is generated by the tape system (see annex M). It is recorded as the Vendor Group (see 14.5.1).

Data and Separator Marks received from the host computer shall be grouped in the Basic Groups following Basic Group No. 0 starting with Basic Group No. 1. These Basic Groups shall be structured as follows.

NOTE 9 - In this International Standard, there are two types of Separator Marks which are referred to as Separator 1 and Separator 2. Some other standards, e.g. those which define an interface between a tape drive and a host computer, use the terms "file mark" and "set mark" to denote Separator Marks. It is recommended that Separator 1 be equated to file mark and Separator 2 be equated to set mark.

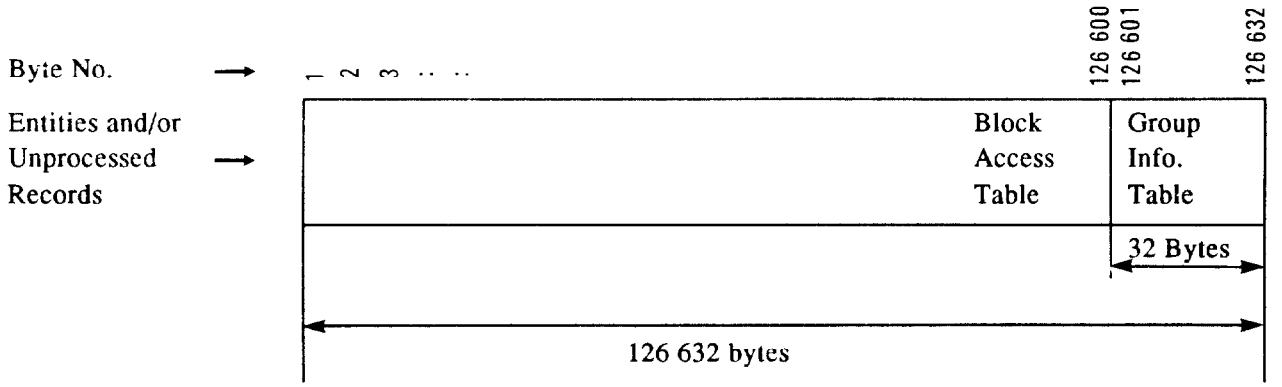

Figure 25 - Structure of a Basic Group

Data, which comprises Entities and/or Unprocessed Records, shall progress into the Basic Group from left to right (as seen in figure 25). At the same time a part of the Basic Group, called the Block Access Table, shall progress from right to left. The Group Information Table shall occupy the last 32 bytes of the Basic Group.

9.2.1 Entity

9.2.1.1 Content

An Entity comprises an Entity Header and a Processed Record Sequence. The Entity Header is 8 bytes in length and precedes the Processed Record Sequence.

All Processed Records in an Entity shall be the result of applying the same Processing Algorithm to Unprocessed Records of equal length.

An Entity may span Basic Groups, provided that all of the Entity Header and the first 8 bits of the Processed Record Sequence are within the same Basic Group.

In the case where an Entity spans Basic Groups, the parts thereof, within each Basic Group, are known as Partial Entities. A Partial Entity is either a Start Part, a Middle Part or a Last Part of the whole Entity - see 9.2.3.1.2, 9.2.3.1.3, 9.2.3.1.4. Within a spanned Entity, there shall be at most one Processed Record in the total set of Partial Entities which are the Middle Part(s) (if any) and Last Part of that Entity, i.e. there may be a part or all of one Processed Record in that set.

Copyright International Organization for Standardization
Provided by IHS under license with ISO
No reproduction or networking permitted without license from IHS
Not for Resale

The Processed Record Sequence within an Entity may also include Processed Records other than those containing data for interchange. In such a case, all of the Processed Records which do not contain data for interchange shall be located after the last Processed Record which does contain data for interchange. When reading such an Entity, the receiving system shall skip over those Processed Records which do not contain data for interchange. The number of such Processed Records need not be an integer.

NOTE 10 - This condition may arise, for example, as a result of an overwrite operation starting within a previously-recorded Processed Record Sequence.

9.2.1.2 Access Points

An Entity shall contain zero or one Access Point. If present, it shall be located at the start of the first Processed Record in the Entity. The presence of an Access Point shall be indicated by a non-ZERO value of Byte No. 3 of the Entity Header (see 9.2.1.3). An Access Point shall be relevant to Processed Data in that Entity; it may also be relevant to Processed Data in subsequent Entities.

There may be an Access Point in any Entire Entity or Start Part Partial Entity. If there is one, or more, Entire Entities in a Basic Group, there shall be an Access Point in the first Entire Entity. If there are no Entire Entities in a Basic Group, but there is a Start Part Partial Entity in that Basic Group, the Start Part Partial Entity shall contain an Access Point.

There shall be an Access Point at the start of the first Processed Record of the first Entity following

- LBOT,
- a Separator Mark,
- an Unprocessed Record,
- a change of Algorithm,
- an Entity including also Processed Records other than those containing data for interchange.

9.2.1.3 Entity Header

Byte No. 1 is the first byte in the Header, and Byte No. 8 is the last byte in the Header, i.e. is adjacent to the Processed Record Sequence. Within a byte, bit 1 shall be the lowest-numbered bit and shall be the least significant, and bit 8 shall be the highest-numbered bit and shall be the most significant. The Entity Header shall have the following layout:

Byte No. 1 — bits 1 to 4 shall specify, in binary notation, the length of the Entity Header in bytes, viz. eight.

bits 5 to 8 shall be set to ZERO.

Byte No. 2 — all bits shall be set to ZERO.

Byte No. 3 — shall specify in binary notation:

- either the value 0, indicating that there is no Access Point within the Entity, or
- any other value, indicating that there is an Access Point within the Entity, and specifying the identifier of the registered Algorithm (see annex N).

Bytes No. 4 to 6 — shall specify in binary notation the length in bytes of the Unprocessed Record which was transformed by Processing into the first Processed Record of the Entity (see 9.2.1.1, 2nd paragraph). This length shall not equal 0. Byte No. 4 shall be the most significant, Byte No. 6 shall be the least significant.

Bytes No. 7 and 8 — shall specify in binary notation the number of Processed Records in the Entity which contain data for interchange. This number shall not equal 0. Byte No. 7 shall be more significant than Byte No. 8.

Copyright International Organization for Standardization
Provided by IHS under license with ISO
No reproduction or networking permitted without license from IHS
Not for Resale

9.2.2 Group Information Table

The Group Information Table shall have the following layout.

Table 1 - Group Information Table

Byte positions	Length in bytes	Name of the field
126 632 to 126 629	4	*(Set to all ZEROs)*
126 628 and 126 627	2	Group Number of the Previous Separator 2
126 626 and 126 625	2	Count of Separator 2's
126 624 and 126 623	2	Group Number of the Previous Separator 1
126 622 and 126 621	2	Count of Separator 1's
126 620 and 126 619	2	Group Number of the Previous Record
126 618 and 126 617	2	Count of Records in the Current Basic Group
126 616 and 126 615	2	Separator 2 Count
126 614 and 126 613	2	*(Set to all ZEROs)*
126 612 to 126 609	4	Separator 1 Count
126 608 to 126 605	4	Record Count
126 604 and 126 603	2	Block Access Table Count
126 602 and 126 601	2	Group Number

Copyright International Organization for Standardization
Provided by IHS under license with ISO
No reproduction or networking permitted without license from IHS
Not for Resale

Within each field of table 1 the most-significant byte shall be in the lowest-numbered byte position and the least-significant byte shall be in the highest-numbered byte position.

9.2.2.1 Group number of the previous Separator 2 field

This field shall be a 2-byte field. It shall specify in binary notation the running number of the previous Basic Group which contains the last written Separator 2. If no such Basic Group exists, this field shall be set to all ZEROS.

9.2.2.2 Count of Separator 2's field

This field shall be a 2-byte field. It shall specify in binary notation the number of Separator 2's written in the current Basic Group.

9.2.2.3 Group number of the previous Separator 1 field

This field shall be a 2-byte field. It shall specify in binary notation the running number of the previous Basic Group which contains the last written Separator 1. If no such Basic Group exists, this field shall be set to all ZEROs.

9.2.2.4 Count of Separator 1's field

This field shall be a 2-byte field. It shall specify in binary notation the number of Separator 1's written in the current Basic Group.

9.2.2.5 Group number of the previous record field

This field shall be a 2-byte field. It shall specify in binary notation the running number of the highest-numbered previous Basic Group in which a Separator Mark, an Access Point or the beginning of an Unprocessed Record occurred. If no such Basic Group exists, this field shall be set to all ZEROs.

9.2.2.6 Count of records in the current Basic Group field

This field shall be a 2-byte field. It shall specify in binary notation the sum of the following:

- the number of Separator Mark entries in the BAT of the current Basic Group
- the number of Total Count of Unprocessed Record entries in the BAT of the current Basic Group
- the number of Entire Unprocessed Record entries in the BAT of the current Basic Group
- the sum of the numbers in Bytes No. 7 and No. 8 of the Entity Headers of all Entities for which there is an Entire Entity entry in the BAT of the current Basic Group,
- the value which is 1 less than the number in Bytes No. 7 and No. 8 of the Entity Header of the Entity for which there is a Start Part of Entity entry in the BAT of the current Basic Group, if such an entry exists,
- the number of Total Count of Entity entries in the BAT of the current Basic Group.

9.2.2.7 Separator 2 count field

This field shall be a 2-byte field. It shall specify in binary notation the number of Separator twos written since the LBOT including those in the current Basic Group.

9.2.2.8 Separator 1 count field

This field shall be a 4-byte field. It shall specify in binary notation the number of Separator ones written since the LBOT including those in the current Basic Group.

Copyright International Organization for Standardization
Provided by IHS under license with ISO
No reproduction or networking permitted without license from IHS
Not for Resale

9.2.2.9 Record count field

This field shall be a 4-byte field. It shall specify in binary notation the sum of the values in the Number of Records in the Current Basic Group fields of the GITs of all Basic Groups since LBOT, up to and including the current Basic Group.

9.2.2.10 Block Access Table count field

This field shall be a 2-byte field. It shall specify in binary notation the number of entries in the Block Access Table.

9.2.2.11 Group Number field

This field shall be a 2-byte field. It shall specify in binary notation the running number of the current Basic Group.

9.2.3 Block Access Table (BAT)

The BAT shall contain one or more entries for each Entity, Unprocessed Record and Separator Mark of the Basic Group. Entities and Unprocessed Records not entirely contained in the Basic Group shall also be identified by one or more entries. The first entry shall be written immediately before the Group Information Table, in byte positions 126 597 to 126 600. Each entry shall be a 4-byte field structured as follows.

<table>
<tr><td colspan="10">Entry of the Block Access Table</td></tr>
<tr><td colspan="8">Flag Byte</td><td colspan="2">Count</td></tr>
<tr><td colspan="8">1st byte</td><td>2nd byte</td><td>3rd byte</td><td>4th byte</td></tr>
<tr><td>b8</td><td>b7</td><td>b6</td><td>b5</td><td>b4</td><td>b3</td><td>b2</td><td>b1</td><td>(msb)</td><td></td><td>(lsb)</td></tr>
</table>

Figure 26 - Block Access Table

Depending on the setting of the Flag Byte, the 3-byte Count field shall express in binary notation a number not greater than 2^{24}-1 as specified below. This Standard specifies twelve settings of the Flag Byte. Other settings are prohibited by this Standard.

9.2.3.1 Settings of the Flag Byte

9.2.3.1.1 **0111X011** : Entire Entity entry

This entry relates to an Entity and shall specify that the Entity starts and ends in the current Basic Group. The Count field shall specify the number of bytes in the Entity.

9.2.3.1.2 **0101X010** : Start Part of Entity entry

This entry relates to an Entity and shall specify that the Entity starts in the current Basic Group and ends in a subsequent Basic Group. The Count field shall specify the number of bytes in the Partial Entity which is in the current Basic Group.

9.2.3.1.3 **0101X000** : Middle Part of Entity entry

This entry relates to an Entity and shall specify that the Entity starts in a previous Basic Group and ends in a subsequent Basic Group. The Count field shall specify the number of bytes in the Partial Entity which is in the current Basic Group.

Copyright International Organization for Standardization
Provided by IHS under license with ISO
No reproduction or networking permitted without license from IHS
Not for Resale

9.2.3.1.4 0111X000 : Last Part of Entity entry

This entry relates to an Entity and shall specify that the Entity starts in a previous Basic Group and ends in the current Basic Group. The Count field shall specify the number of bytes in the Partial Entity which is in the current Basic Group. This entry shall be immediately followed in the BAT of the current Basic Group by an entry for Total Count of Entity.

9.2.3.1.5 0001X001 : Total Count of Entity entry

This entry relates to the same Entity as that of the immediately preceding entry for Last Part of Entity. The Count field shall specify the total number of bytes in the Entity.

9.2.3.1.6 0110X011 : Entire Unprocessed Record entry

This entry relates to an Unprocessed Record and shall specify that the record starts and ends in the current Basic Group. The Count field shall specify the number of bytes of the record.

9.2.3.1.7 0100X010 : Start Part of Unprocessed Record entry

This entry relates to an Unprocessed Record and shall specify that the record starts in the current Basic Group and ends in a subsequent Basic Group. The Count field shall specify the number of bytes in that part of the record which is in the current Basic Group.

9.2.3.1.8 0100X000 : Middle Part of Unprocessed Record entry

This entry relates to an Unprocessed Record and shall specify that the record starts in a previous Basic Group and ends in a subsequent Basic Group. The Count field shall specify the number of bytes in that part of the record which is in the current Basic Group.

9.2.3.1.9 0110X000 : Last Part of Unprocessed Record entry

This entry relates to an Unprocessed Record and shall specify that the record starts in a previous Basic Group and ends in the current Basic Group. The Count field shall specify the number of bytes in that part of the record which is in the current Basic Group.

9.2.3.1.10 0000X001 : Total Count of Unprocessed Record entry

This entry relates to an Unprocessed Record and shall specify

- if this entry is preceded by a Last Part of Unprocessed Record entry (see 9.2.3.1.9), that the Unprocessed Record starts in a previous Basic Group and ends in the current Basic Group. The Count field shall specify the total number of bytes of the Unprocessed Record;
- if the last two entries of the BAT of the previous Basic Group are at Last Part of Unprocessed Record entry and a Skip entry, that the Unprocessed Record ends in that Basic Group and starts in a prior Basic Group. This entry shall be the first entry of the BAT of the current Basic Group. The Count field shall specify the total number of bytes of the Unprocessed Record.

9.2.3.1.11 0000X111 : Separator Mark entry

This entry shall specify that the record is a Separator record. The Count field shall specify the number zero if the record is a Separator 1 record and the number one if the record is a Separator 2 record.

9.2.3.1.12 1000X000 : Skip entry

There shall be a Skip entry as the last entry of the Block Access Table of each Basic Group. This entry indicates that the last byte of user data in the current Basic Group has been reached. The Count field shall

Copyright International Organization for Standardization
Provided by IHS under license with ISO
No reproduction or networking permitted without license from IHS
Not for Resale

specify the remaining number of bytes in the Basic Group. Thus the minimum number that can be specified by the Count field shall be the number of bytes of the BAT plus 32.

9.2.3.1.13 Count fields

The sum of the numbers specified in the Count fields of those of the types of entry in the following list which are present in the Block Access Table shall be 126632. The list comprises: Skip, Entire Unprocessed Record, Start Part of Unprocessed Record, Middle Part of Unprocessed Record, Last Part of Unprocessed Record, Entire Entity, Start Part of Entity, Middle Part of Entity, Last Part of Entity.

9.2.3.1.14 Bit b4 - AEWP

In each of the entries specified in 9.2.3.1.1 to 9.2.3.1.12 the fourth bit, the After Early Warning Point bit, is indicated as indifferent as far as the meaning of the entry is concerned. Its setting shall be as follows

- before EWP (see 14.8 and 15.1.2.4) it shall be set to ZERO;
- after EWP it shall be set to ONE in all following entries in the Index of the current and all following Basic Groups.

9.2.3.2 Valid sequences of entries of the Block Access Table

These are illustrated by the following chart, in which states and actions are described within rectangles, and the entries (as designated by the setting of the Flag Byte) are described within ellipses. The terms "spanned entity" and "spanned unprocessed record" designate respectively an Entity or Unprocessed Record which starts in one Basic Group and ends in a subsequent Basic Group.

Table 2 shows only those entries which are valid as the next entry to be encountered in each state or after each action. All other entries are invalid.

Note that a special case is permitted, for spanned Unprocessed Records only, in which the Total Count of Unprocessed Record entry may be placed as the first item in the Block Access Table of the subsequent Basic Group.

Copyright International Organization for Standardization
Provided by IHS under license with ISO
No reproduction or networking permitted without license from IHS
Not for Resale

Table 2 - Valid Sequences of Entries in the Block Access Table

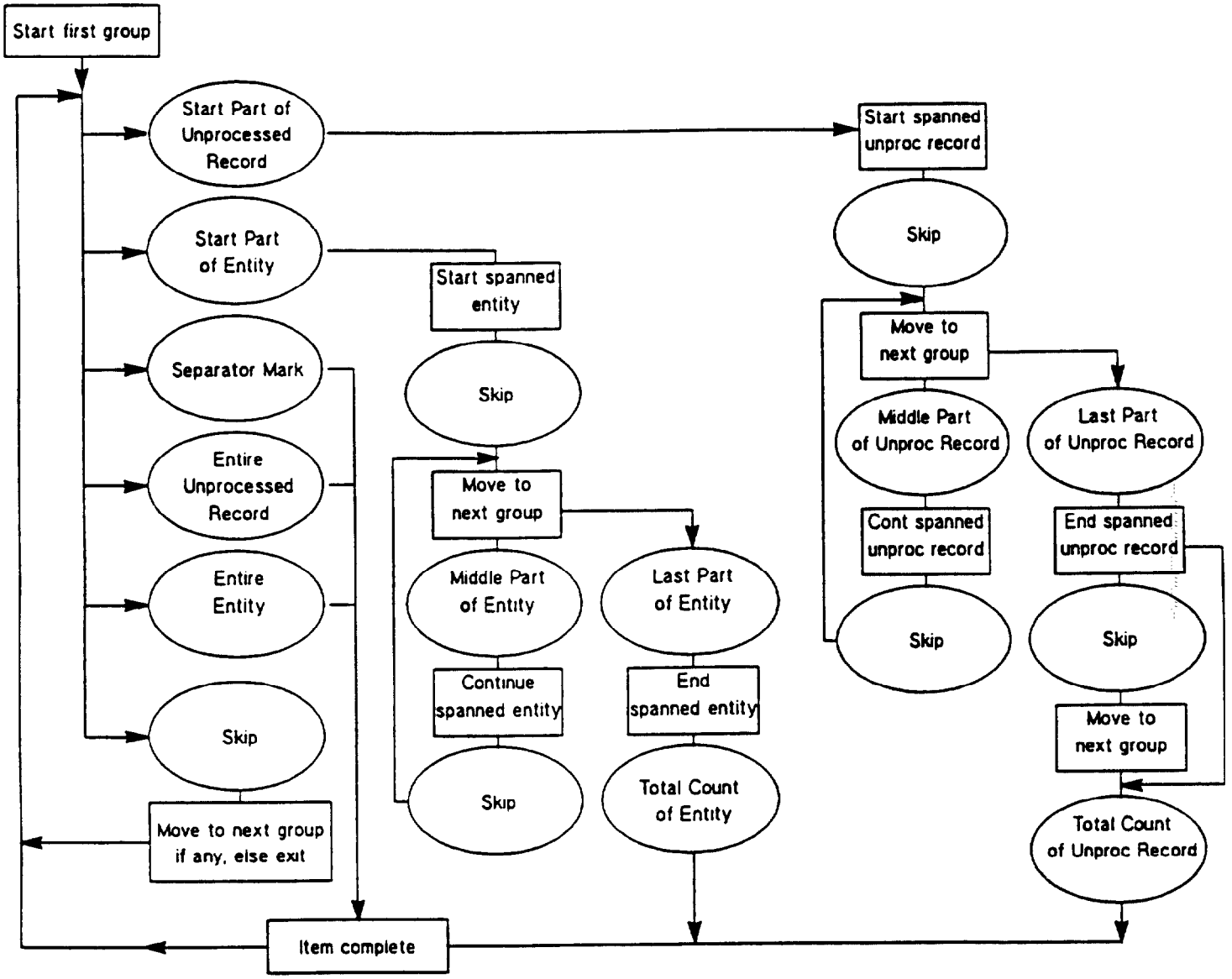

9.3 Sub-Groups

9.3.1 G1 Sub-Group

When a Basic Group has been completed, it shall be split into 22 G1 Sub-Groups of 5 756 bytes numbered from 0 to 5 755.

Copyright International Organization for Standardization
Provided by IHS under license with ISO
No reproduction or networking permitted without license from IHS
Not for Resale

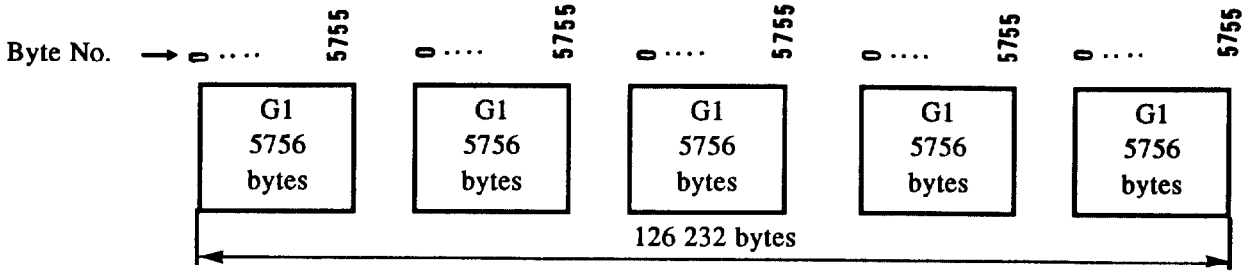

Figure 27 - G1 Sub-Groups

9.3.2 G2 Sub-Group - randomizing

The bytes of each G1 Sub-Group shall be submitted to an Exclusive OR operation together with a sequence of bits which is the output of the shift register shown in figure 28. Before each G1 Sub-Group, the shift register shall be set as shown.

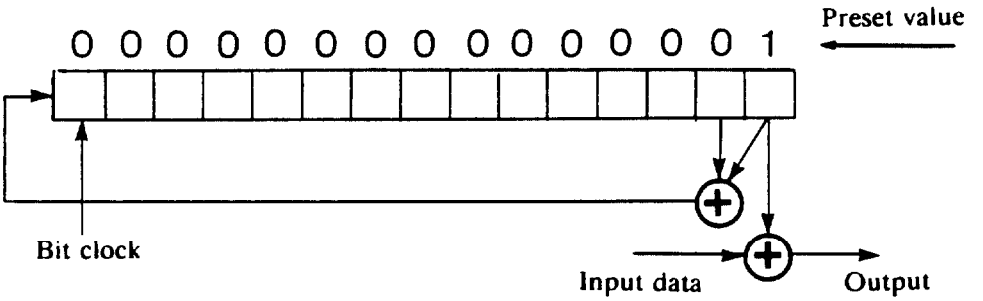

Figure 28 - Shift register

For each byte the least significant bit, i.e. bit b1 is input first. The logical operators are Exclusive ORs. The result of this operation is a G2 Sub-Group in which all bytes are numbered from D0 to D5 755. Their sequence is the same as before the randomizing operation, i.e. as in the G1 Sub-Group.

9.3.3 G3 Sub-Group

Each G2 Sub-Group of 5 756 bytes shall be re-arranged into a G3 Sub-Group of 5 824 bytes.

In a G3 Sub-Group the bytes of the G2 Sub-Group are ordered consecutively in rows of four called a word. These words are numbered consecutively from 1 to 1 439. They are preceded by a 4-byte Header forming word No. 0 and followed by 16 4-byte words numbered 1 440 to 1 455 all bytes of which are set to all ZEROs.

The bytes Dk of the G2 Sub-Group the numbers k of which equal 0 or 1 (mod 4) are grouped in a 2-byte channel A. The bytes Dk the numbers k of which equal 2 or 3 (mod 4) are grouped in a 2-byte channel B.

In each channel the bytes are allocated to a lower or an upper byte as follows:

Dk is allocated to the lower byte of channel A for k = 0 (mod 4)

Dk is allocated to the upper byte of channel A for k = 1 (mod 4)

Dk is allocated to the lower byte of channel B for k = 2 (mod 4)

Dk is allocated to the upper byte of channel B for k = 3 (mod 4)

Copyright International Organization for Standardization
Provided by IHS under license with ISO
No reproduction or networking permitted without license from IHS
Not for Resale

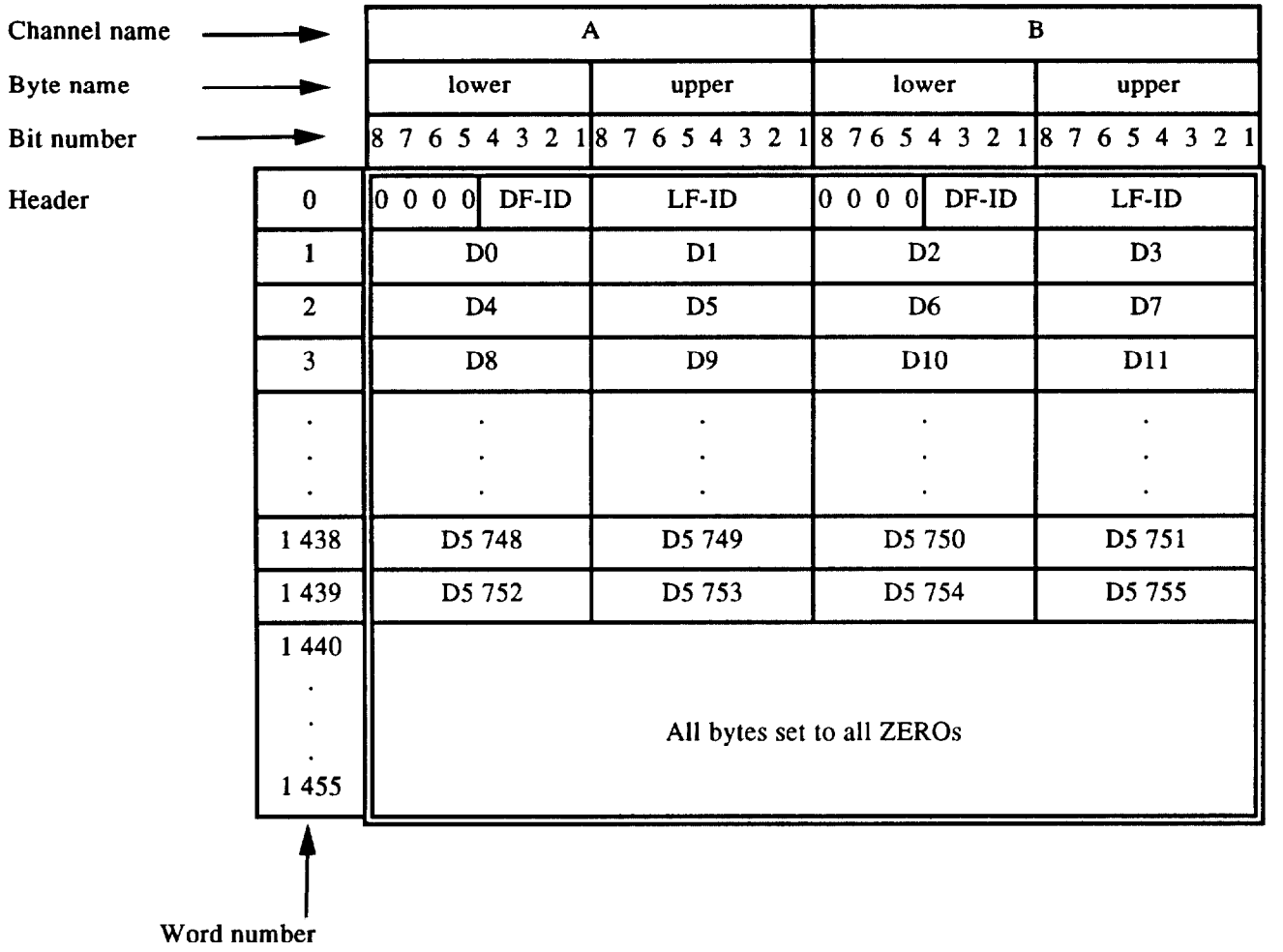

Figure 29 - G3 Sub-Group

9.3.3.1 Header

Word No. 0 constitutes a 6-field Header.

9.3.3.1.1 Data format ID (DF-ID)

In both channels, this field shall be a 4-bit field. It shall be set to 0000.

9.3.3.1.2 Bits 5-8 of the lower byte of both channels

These bits shall be set to ZERO.

9.3.3.1.3 Logical frame ID (LF-ID)

In both channels this field shall be an 8-bit field. Bits 6 to 1 shall express in binary notation the Logical Frame Number, which is the running number of the G1 Sub-Group.

- if bits 6 to 1 express a number in the range 1 to 21:
  - . bit 7 shall be set to ZERO, and
  - . bit 8 shall be set to ZERO

Copyright International Organization for Standardization
Provided by IHS under license with ISO
No reproduction or networking permitted without license from IHS
Not for Resale

- if bits 6 to 1 express the number 22:
  - . bit 7 shall be set to ZERO, and
  - . bit 8 shall be set to:
    - ♦ ZERO to indicate that there is a 23rd Sub-Group containing the check bytes of the ECC3 (see 14.5.3), or
    - ♦ ONE, to indicate that there is no such 23rd Sub-Group
- if bits 6 to 1 express the number 23
  - . bit 7 shall be set to ONE, and
  - . bit 8 shall be set to ONE

  thus indicating that the Sub-Group contains the check bytes of the ECC3, and that the Sub-Group is the last of the sequence.

9.3.3.1.4 Byte identification

Each byte of a G3 Sub-Group is now identified by

- its channel (A or B)
- its byte name (lower or upper)
- its word number (from 0 to 1455)

Thus, the following notation is introduced.

A_{il} indicates the byte identified by the lower byte of channel A in the i-th word.

A_{iu} indicates the byte identified by the upper byte of channel A in the i-th word.

B_{il} indicates the byte identified by the lower byte of channel B in the i-th word.

B_{iu} indicates the byte identified by the upper byte of channel B in the i-th word.

9.3.4 G4 Sub-Group

Each Sub-Group G3 shall be transformed into a Sub-Group G4 consisting of two twin arrays as follows.

A Sign, a Block Number and a Serial Number shall be allocated to each byte using the following formulae.

Sign: $(-1)^{a+i}$

Block number: $i(\mathrm{mod}\,52)+75(i(\mathrm{mod}\,2))+\mathrm{int}\frac{i}{832}$

Serial number: $2(u+\mathrm{int}\frac{i}{52})-\mathrm{int}\frac{i}{52}(\mathrm{mod}\,2)-32\,\mathrm{int}\frac{i}{832}$

where

int = indicates the integer part of the quotient

i = 0 to 1 455

a = 0 for the A_{iu} and A_{il} bytes

a = 1 for the B_{iu} and B_{il} bytes

Copyright International Organization for Standardization
Provided by IHS under license with ISO
No reproduction or networking permitted without license from IHS
Not for Resale

u = 0 for the A_{iu} and B_{iu} bytes

u = 1 for the A_{il} and B_{il} bytes

Processing a G3 Sub-Group in this way yields twin arrays PLUS and MINUS in which each byte is identified by its Block Number (from 0 to 127) and its Serial Number (from 0 to 31).

Array PLUS

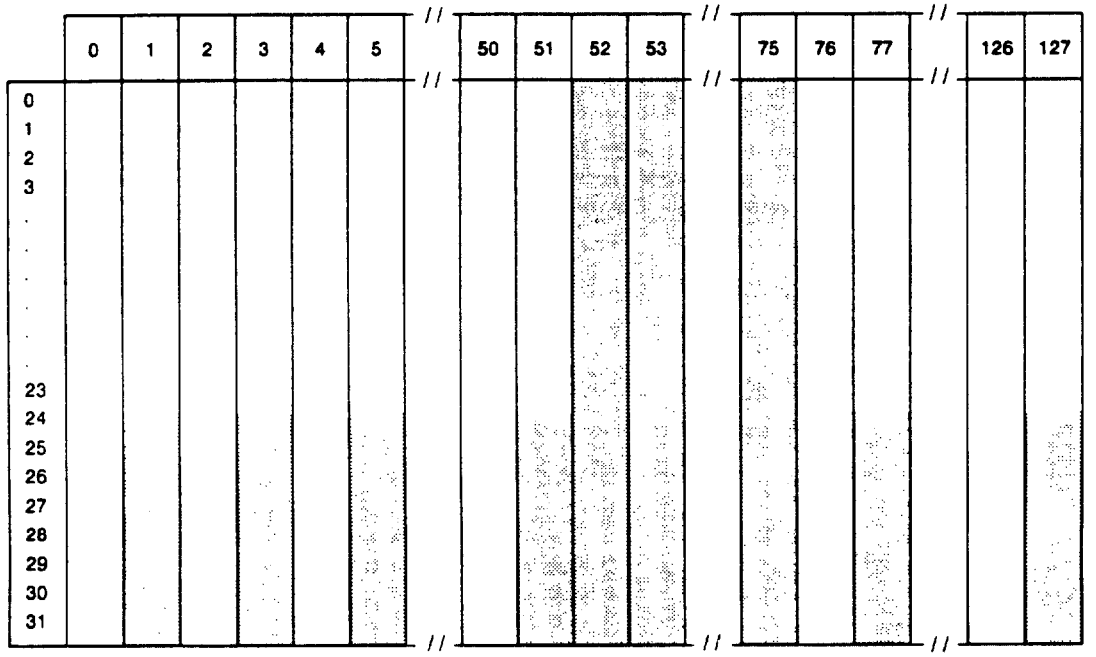

Array MINUS

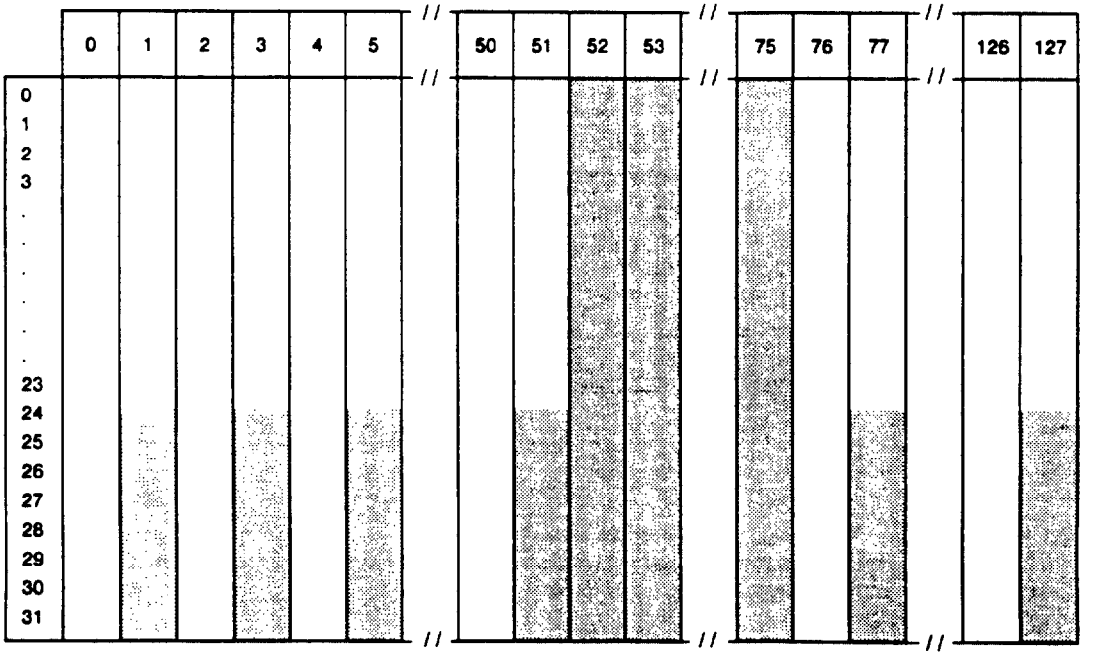

Figure 30 - Twin arrays of a G4 Sub-Group before C1 and C2 computation

Copyright International Organization for Standardization
Provided by IHS under license with ISO
No reproduction or networking permitted without license from IHS
Not for Resale

Applying the above formulae to the bytes of a G3 Sub-Group leaves a number of positions unoccupied in both arrays. These positions, shown shaded in figure 30, are:

- Serial Numbers 24 to 31 in all odd numbered Blocks with a Block Number 1 to 51 and 77 to 127,
- all Blocks with a Block Number from 52 to 75.

The bytes to be allocated to these positions shall be obtained by computing ECC bytes obtained from two error detection and correction codes C1 and C2 computed over the bytes already allocated into the two twin arrays.

The C2 bytes shall be computed for all Serial Numbers in each even-numbered Block with a Block Number from 52 to 74, and for Serial Numbers 0 to 23 in each odd-numbered Block with a Block Number from 53 to 75 from the bytes with the same Serial Number in all the other Blocks.

The C1 bytes shall then be computed for Serial Numbers 24 to 31 in all odd-numbered Blocks from all the bytes in the previous even-numbered Block and the bytes with a Serial Number from 0 to 23 in the odd-numbered Block. In Blocks with a Block Number from 53 to 75, these C1 bytes shall be computed from the C2 bytes previously computed.

These two computations yield the bytes for the byte positions indicated by the shaded portions of the two twin arrays of figure 30.

- C1 shall be a GF (2^8) Reed-Solomon Code (32, 28, 5)
- C2 shall be a GF (2^8) Reed-Solomon Code (32, 26, 7)

Calculation in a GF (2^8) is defined by

$$G(x) = x^8 + x^4 + x^3 + x^2 + 1$$

A primitive element α in GF (2^8) shall be:

$$\begin{array}{cccccccc} \alpha = (0 & 0 & 0 & 0 & 0 & 0 & 0 & 0) \\ \alpha^7 & \alpha^6 & \alpha^5 & \alpha^4 & \alpha^3 & \alpha^2 & \alpha^1 & \alpha^0 \end{array}$$

The interleave depth of C1 is two bytes, that of C2 is four blocks. The ECC bytes shall satisfy

$H_P \times V_P = 0$

$H_Q \times V_Q = 0$

The generator polynomials shall be

$$G_P(x) = \prod_{i=0}^{i=3} x - \alpha^i$$

$$G_Q(x) = \prod_{i=0}^{i=5} x - \alpha^i$$

$$H_P = \begin{bmatrix} 1 & 1 & 1 & 1 & ..... & 1 & 1 & 1 \\ \alpha^{31} & \alpha^{30} & \alpha^{29} & \alpha^{28} & ..... & \alpha^2 & \alpha & 1 \\ \alpha^{62} & \alpha^{60} & \alpha^{58} & \alpha^{56} & ..... & \alpha^4 & \alpha^2 & 1 \\ \alpha^{93} & \alpha^{90} & \alpha^{87} & \alpha^{84} & ..... & \alpha^6 & \alpha^3 & 1 \end{bmatrix}$$

Copyright International Organization for Standardization
Provided by IHS under license with ISO
No reproduction or networking permitted without license from IHS
Not for Resale

$$H_Q = \begin{bmatrix} 1 & 1 & 1 & 1 & ..... & 1 & 1 & 1 \\ \alpha^{31} & \alpha^{30} & \alpha^{29} & \alpha^{28} & ..... & \alpha^{2} & \alpha & 1 \\ \alpha^{62} & \alpha^{60} & \alpha^{58} & \alpha^{56} & ..... & \alpha^{4} & \alpha^{2} & 1 \\ \alpha^{93} & \alpha^{90} & \alpha^{87} & \alpha^{84} & ..... & \alpha^{6} & \alpha^{3} & 1 \\ \alpha^{124} & \alpha^{120} & \alpha^{116} & \alpha^{112} & ..... & \alpha^{8} & \alpha^{4} & 1 \\ \alpha^{155} & \alpha^{150} & \alpha^{145} & \alpha^{140} & ..... & \alpha^{10} & \alpha^{5} & 1 \end{bmatrix}$$

$$V_P = \begin{bmatrix} D_{2k,l} \\ D_{2k,l+2} \\ D_{2k,l+4} \\ D_{2k,l+6} \\ D_{2k,l+8} \\ D_{2k,l+10} \\ D_{2k,l+12} \\ D_{2k,l+14} \\ D_{2k,l+16} \\ D_{2k,l+18} \\ D_{2k,l+20} \\ D_{2k,l+22} \\ D_{2k,l+24} \\ D_{2k,l+26} \\ D_{2k,l+28} \\ D_{2k,l+30} \\ D_{2k+1,l} \\ D_{2k+1,l+2} \\ D_{2k+1,l+4} \\ D_{2k+1,l+6} \\ D_{2k+1,l+8} \\ D_{2k+1,l+10} \\ D_{2k+1,l+12} \\ D_{2k+1,l+14} \\ D_{2k+1,l+16} \\ D_{2k+1,l+18} \\ D_{2k+1,l+20} \\ D_{2k+1,l+22} \\ P_{2k+1,l+24} \\ P_{2k+1,l+26} \\ P_{2k+1,l+28} \\ P_{2k+1,l+30} \end{bmatrix} \qquad V_Q = \begin{bmatrix} D_{m,n} \\ D_{m+4,n} \\ D_{m+8,n} \\ D_{m+12,n} \\ D_{m+16,n} \\ D_{m+20,n} \\ D_{m+24,n} \\ D_{m+28,n} \\ D_{m+32,n} \\ D_{m+36,n} \\ D_{m+40,n} \\ D_{m+44,n} \\ D_{m+48,n} \\ Q_{m+52,n} \\ Q_{m+56,n} \\ Q_{m+60,n} \\ Q_{m+64,n} \\ Q_{m+68,n} \\ Q_{m+72,n} \\ D_{m+76,n} \\ D_{m+80,n} \\ D_{m+84,n} \\ D_{m+88,n} \\ D_{m+92,n} \\ D_{m+96,n} \\ D_{m+100,n} \\ D_{m+104,n} \\ D_{m+108,n} \\ D_{m+112,n} \\ D_{m+116,n} \\ D_{m+120,n} \\ D_{m+124,n} \end{bmatrix}$$

Copyright International Organization for Standardization
Provided by IHS under license with ISO
No reproduction or networking permitted without license from IHS
Not for Resale

where

$P_{i,j}$ = C1 bytes

$Q_{i,j}$ = C2 bytes

i = Block Number

j = Serial Number

For C1: $k = 0, 1, ..., 63$

$l = 0,1$

if $k = 26, 27, ...$ to 37, then D_{ij} in V_p is read as Q_{ij}

For C2: if $m = 0$ or 2, then $n = 0, 1, ..., 31$

if $m = 1$ or 3, then $n = 0, 1, ..., 23$

9.3.5 Main Data Block

Each 32-byte block of each array of a G4 Sub-Group shall be transformed into a 35-byte Main Data Block by the addition of a Header of three 8-bit bytes preceding the 32 bytes of the block:

- 2 bytes : Main ID, W1 and W2
- 1 byte : Main ID, parity.

9.3.5.1 Main ID

The Main ID bytes W1 and W2 shall have the following contents.

9.3.5.1.1 W1 byte

	b8	b7	b6	b5	b4	b3	b2	b1
Block with even Block numbers	Format ID		0	0	Frame number			
Block with odd Block numbers	0	0	0	0	0	0	0	0

Figure 31 - W1 byte

For all blocks of the G4 Sub-Group with an odd Block Number the W1 byte shall be set to all ZEROs.

For all blocks of the G4 Sub-Group with an even Block Number, the W1 byte shall be set as follows:

Bits 8 and 7 if the Block Number (mod 8) equals 0 then these bits, called Format ID, are set to 01, otherwise they are set to 00

Bits 6 and 5 shall be set to ZERO

Bits 4 to 1 shall specify in binary notation a Frame Number. This is a running number which shall be incremented (mod 16) between consecutive frames (see figure 46). Repetitions and discontinuities are allowed at an append point (see 14.5.6).

Copyright International Organization for Standardization
Provided by IHS under license with ISO
No reproduction or networking permitted without license from IHS
Not for Resale

9.3.5.1.2 W2 byte

b8	b7	b6	b5	b4	b3	b2	b1
0	Block Number of the Blocks of the G4 Sub-Group						

Figure 32 - W2 byte

Bit 8 shall be set to ZERO to indicate that the block is a Main Data Block.

Bits 7 to 1 shall specify in binary notation the Block Number from 0 to 127 of this Main Data Block.

9.3.5.2 Main ID parity

The Main ID Parity byte shall be set to (W1 ⊕ W2), where ⊕ is the Exclusive OR operator.

9.3.5.3 Summary of the structure of a Main Data Block

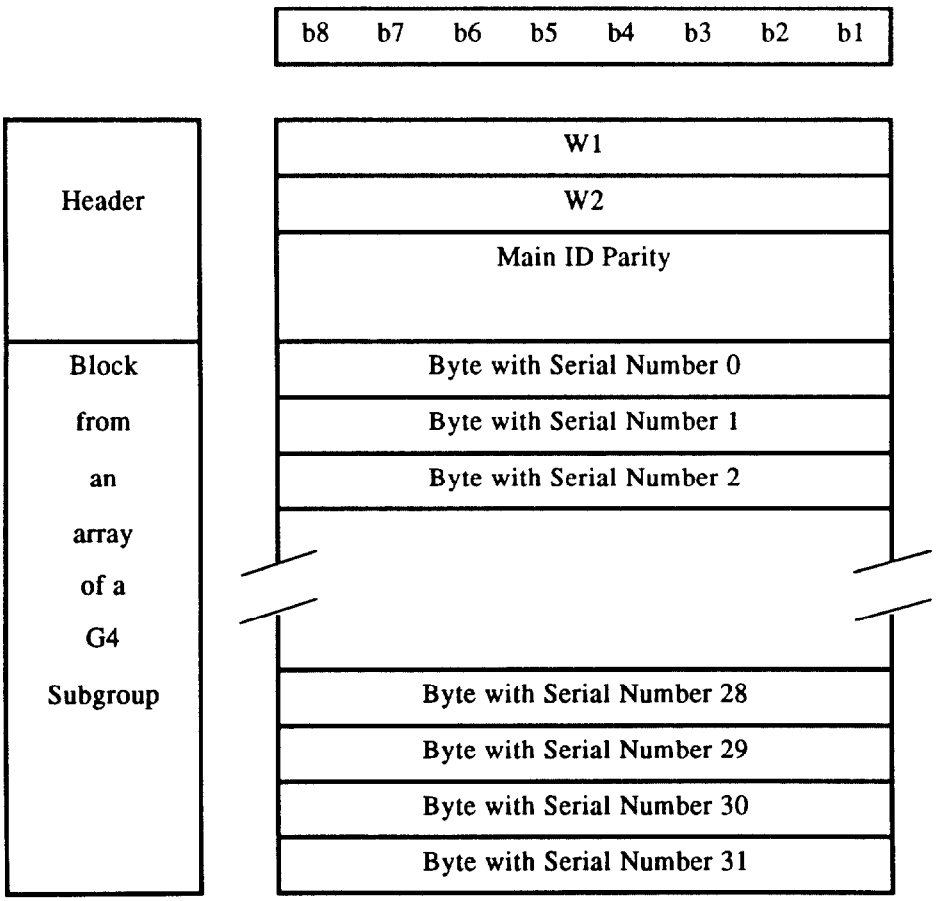

Figure 33 - Main data block

Copyright International Organization for Standardization
Provided by IHS under license with ISO
No reproduction or networking permitted without license from IHS
Not for Resale

9.3.5.4 Summary of the transformation of a Basic Group

Each Basic Group has been transformed into 22 G4 Sub-Groups. Each G4 Sub-Group consists of two arrays of 128 Blocks each. Each of these Blocks has been transformed into a Main Data Block. Thus a Basic Group is transformed into 22 x 2 x 128 = 5 632 Main Data Blocks before being recorded on the tape.

9.4 Sub-Data Area

The Sub-Data Area contains three types of information arranged in groups called Pack Items:

- in Pack Items No. 1 and 2, information about the Basic Group, viz.
  - . the Running Number of the Basic Group,
  - . the number of Separator 1's written since the LBOT
  - . the number of Separator 2's written since the LBOT
  - . the number of records written since the LBOT
- in Pack Items No. 3 and 4, information about the contents of the tracks,
- in Pack Items No. 5 to 8, log data on the history of the use of the tape (see 14.4.2).

Each Pack Item consists of eight 8-bit bytes numbered from 1 to 8, b8 being the most significant bit. In all Pack Items

- Bits 8 to 5 of byte No. 1 shall specify in binary notation the Pack Item Number,
- for all multiple-byte fields, the lowest numbered byte shall be the most significant and highest numbered byte the least significant,
- Byte No. 8 is called Parity. For each bit position the content shall be the sum (mod 2) of the corresponding bits of the other seven bytes.

9.4.1 Pack Item Number 1

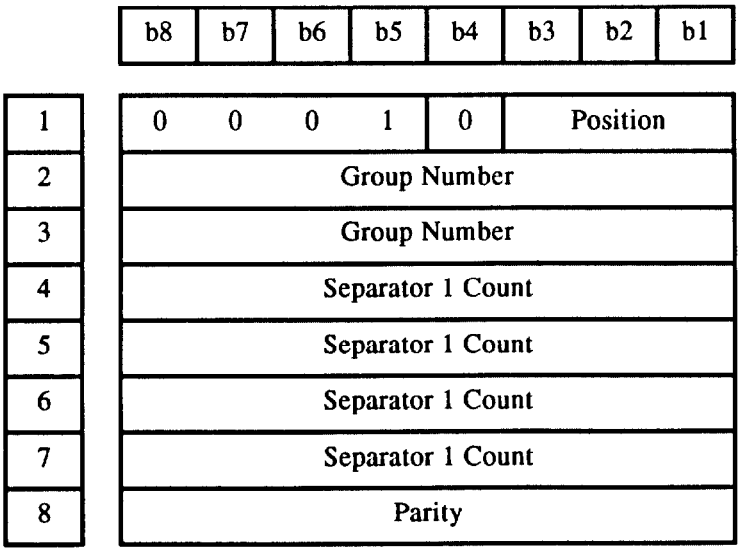

Figure 34 - Pack Item Number 1

Copyright International Organization for Standardization
Provided by IHS under license with ISO
No reproduction or networking permitted without license from IHS
Not for Resale

9.4.1.1 Byte No. 1

In byte No. 1

- b8 to b5 shall specify Pack Item Number 1
- b4 shall be set to ZERO
- b3 to b1 shall specify the position of the current recorded instance of this Basic Group in a sequence of contiguous, recorded instances of this Basic Group (see 14.5.4). The first recorded instance shall be indicated by 000, the second by 001, etc.

9.4.1.2 Bytes No. 2 and 3

These bytes shall specify the Group Number recorded in the Group Information Table (see 9.2.2).

9.4.1.3 Bytes No. 4 to No. 7

These bytes shall specify the Separator 1 Count recorded in the Group Information Table (see 9.2.2).

9.4.2 Pack Item Number 2

	b8	b7	b6	b5	b4	b3	b2	b1
1	0	0	1	0	0	Repetitions		
2	Separator 2 Count							
3	Separator 2 Count							
4	Record Count							
5	Record Count							
6	Record Count							
7	Record Count							
8	Parity							

Figure 35 - Pack Item Number 2

9.4.2.1 Byte No. 1

In byte No. 1

- b8 to b5 shall specify Pack Item Number 2
- b4 shall be set to ZERO
- b3 to b1 shall specify the number of repetitions of the Basic Group in a sequence of contiguous, recorded instances of this Basic Group, viz. the total number of its recorded instances less one (see 14.5.4).

9.4.2.2 Bytes No. 2 and 3

These bytes shall specify the Separator 2 Count recorded in the Group Information Table (see 9.2.2).

Copyright International Organization for Standardization
Provided by IHS under license with ISO
No reproduction or networking permitted without license from IHS
Not for Resale

9.4.2.3 Bytes No. 4 to No. 7

These bytes shall specify the Record Count recorded in the Group Information Table (see 9.2.2).

9.4.3 Pack Item Number 3

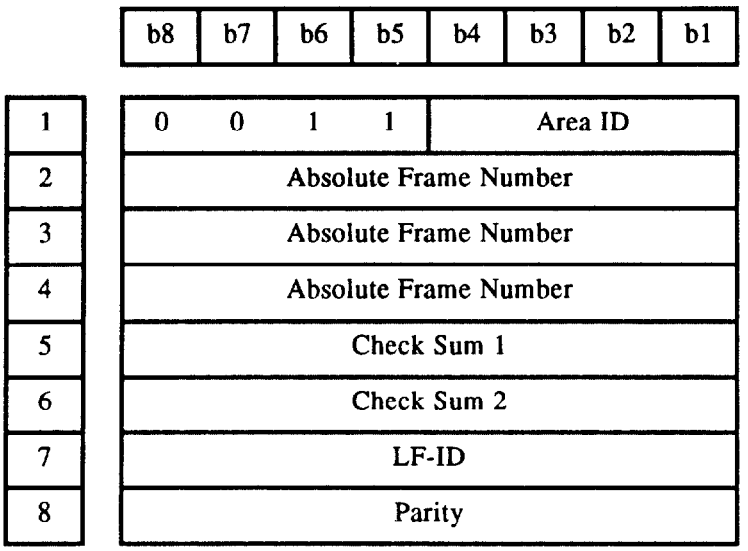

Figure 36 - Pack Item Number 3

9.4.3.1 Byte No. 1

In byte No. 1

- b8 to b5 shall specify Pack Item Number 3
- b4 to b1 shall be set according to 9.4.9.1.1.

9.4.3.2 Bytes No. 2 to No. 4

These bytes shall specify a running number, the Absolute Frame Number, of the current frame, starting with 1 for the first frame after the LBOT.

9.4.3.3 Bytes No. 5 to No. 7

9.4.3.3.1 Area ID set to X100 (see 9.4.9.1.1)

9.4.3.3.1.1 Byte No. 5

For each bit position of this byte the content shall be the sum (mod 2) of the corresponding bits of byte No. 7 of this Pack Item plus the corresponding bits of the bytes of the G1 Sub-Group identified by byte No. 7 having the indices

D_{8i+3}, D_{8i+5}, D_{5755}, where $i = 0, 1, 2, ..., 718$.

9.4.3.3.1.2 Byte No. 6

For each bit position of this byte the content shall be the sum (mod 2) of the corresponding bits of the bytes of the G1 Sub-Group identified by byte No. 7 of this Pack Item having the indices

D_{8i+2}, D_{8i+4}, D_{5754}, where $i = 0, 1, 2, ..., 718$.

Copyright International Organization for Standardization
Provided by IHS under license with ISO
No reproduction or networking permitted without license from IHS
Not for Resale

9.4.3.3.1.3 Byte No. 7

This byte shall have the same setting as the Logical Frame ID of the G1 Sub-Group (see 9.3.3.1.3) to which Pack Item Number 3 refers.

9.4.3.3.2 Area ID set to 0010

These bytes shall specify in binary notation the highest Absolute Frame Number within Partition 1 of a Partitioned Tape (see 15).

9.4.3.3.3 Area ID set to 1010

These bytes shall be set to all ONEs.

9.4.3.3.4 Area ID set to any other bit combination

These bytes shall be set to all ZEROs.

9.4.4 Pack Item Number 4

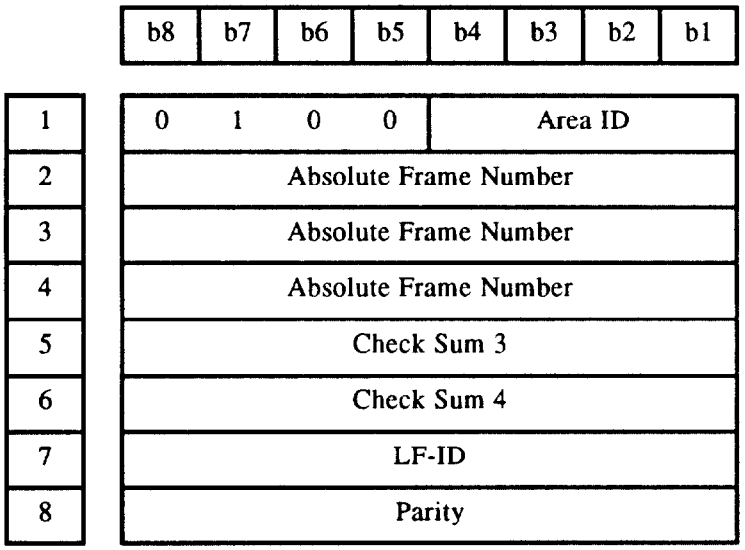

Figure 37 - Pack Item Number 4

9.4.4.1 Byte No. 1

In byte No. 1

- b8 to b5 shall specify Pack Item Number 4
- b4 to b1 shall be set according to 9.4.9.1.1.

9.4.4.2 Bytes No. 2 to No. 4

The number specified in these bytes shall be the same as that specified by bytes No. 2 to No. 4 in Pack Item Number 3.

Copyright International Organization for Standardization
Provided by IHS under license with ISO
No reproduction or networking permitted without license from IHS
Not for Resale

9.4.4.3 Bytes No. 5 to No. 7

9.4.4.3.1 Area ID set to X100 (see 9.4.9.1.1)

9.4.4.3.1.1 Byte No. 5

For each bit position of this byte the content shall be the sum (mod 2) of the corresponding bits of byte No. 7 of this Pack Item plus the corresponding bits of the bytes of the G1 Sub-Group identified by byte No. 7 having the indices

D_1, D_{8i-1}, D_{8i+1}, where $i = 1, 2, ..., 719$.

9.4.4.3.1.2 Byte No. 6

For each bit position of this byte the content shall be the sum (mod 2) of the corresponding bits of the bytes of the G1 Sub-Group identified by byte No. 7 of this Pack Item having the indices

D_0, D_{8i-2}, D_{8i}, where $i = 1, 2, ..., 719$.

9.4.4.3.1.3 Byte No. 7

This byte shall have the same setting as the Logical Frame ID of the G1 Sub-Group (see 9.3.3.1.3) to which Pack Item Number 4 refers.

9.4.4.3.2 Area ID set to 0010

These bytes shall specify in binary notation the highest Absolute Frame Number within Partition 1 of a Partitioned Tape.

9.4.4.3.3 Area ID set to 1010

These bytes shall be set to all ONEs.

9.4.4.3.4 Area ID set to any other bit combination

These bytes shall be set to all ZEROs.

9.4.5 Pack Item Number 5

	b8	b7	b6	b5	b4	b3	b2	b1
1	0	1	0	1	Recorded Data Groups			
2	Recorded Data Groups							
3	Recorded Data Groups							
4	Total Number of Recorded Data Groups							
5	Total Number of Recorded Data Groups							
6	Total Number of Recorded Data Groups							
7	Total Number of Recorded Data Groups							
8	Parity							

Figure 38 - Pack Item Number 5

Copyright International Organization for Standardization
Provided by IHS under license with ISO
No reproduction or networking permitted without license from IHS
Not for Resale

9.4.5.1 Byte No. 1

- b8 to b5 shall specify Pack Item Number 5
- b4 to b1 see 9.4.5.2

9.4.5.2 Bytes No. 2 and No. 3

Together with bits b4 to b1 of byte No. 1 these two bytes constitute a 20-bit field specifying the number of Recorded Data Groups (see 14.5.2 and 14.5.4) recorded on the tape between the last update but one and the last update of the log. Bit b4 of byte No. 1 is the most significant and bit b1 of byte No. 3 is the least significant bit.

9.4.5.3 Bytes No. 4 to No. 7

These bytes shall specify the number of Recorded Data Groups (see 14.5.2 and 14.5.4) recorded following the last initialization of the tape (see 14.9 and 15.5) and prior to the last update of the log.

9.4.6 Pack Item Number 6

	b8	b7	b6	b5	b4	b3	b2	b1
1	0	1	1	0	Recorded Data Groups Read			
2	Recorded Data Groups Read							
3	Recorded Data Groups Read							
4	Total Number of Recorded Data Groups Read							
5	Total Number of Recorded Data Groups Read							
6	Total Number of Recorded Data Groups Read							
7	Total Number of Recorded Data Groups Read							
8	Parity							

Figure 39 - Pack Item Number 6

9.4.6.1 Byte No. 1

- b8 to b5 shall specify Pack Item Number 6
- b4 to b1 see 9.4.6.2.

9.4.6.2 Bytes No. 2 and No. 3

Together with bits b4 to b1 of byte No. 1 these two bytes constitute a 20-bit field specifying the number of Recorded Data Groups (see 14.5.2 and 14.5.4) read successfully by a drive between the last update but one and the last update of the log. Bit b4 of byte No. 1 is the most significant and bit b1 of byte No. 3 is the least significant bit.

Copyright International Organization for Standardization
Provided by IHS under license with ISO
No reproduction or networking permitted without license from IHS
Not for Resale

9.4.6.3 Bytes No. 4 to No. 7

These bytes shall specify the number of Recorded Data Groups (see 14.5.2 and 14.5.4) read successfully following the last initialization of the tape (see 14.9 and 15.5) and prior to the last update of the log.

9.4.7 Pack Item Number 7

	b8	b7	b6	b5	b4	b3	b2	b1
1	0	1	1	1	0	0	0	0
2	Total Check-Read Failures							
3	Total Check-Read Failures							
4	Total Check-Read Failures							
5	Total Group Read Failures							
6	Total Group Read Failures							
7	Total Group Read Failures							
8	Parity							

Figure 40 - Pack Item Number 7

9.4.7.1 Byte No. 1

- b8 to b5 shall specify Pack Item Number 7
- b4 to b1 shall be set to ZERO.

9.4.7.2 Bytes No. 2 to No. 4

These bytes shall specify the total number of frames that have failed a Read-After-Write check (see annex L) following the last initialization of the tape (see 14.9 and 15.5) and prior to the last update of the log.

This number does not include the frames which are written between the original frame and its next rewritten occurrence.

9.4.7.3 Bytes No. 5 to No. 7

These bytes shall specify the number of times it has not been possible to read successfully all data in a Recorded Data Group with the use of C1 and C2 only, following the last initialization of the tape (see 14.9 and 15.5) and prior to the last update of the log. This number includes all unsuccessful attempts.

Copyright International Organization for Standardization
Provided by IHS under license with ISO
No reproduction or networking permitted without license from IHS
Not for Resale

9.4.8 Pack Item Number 8

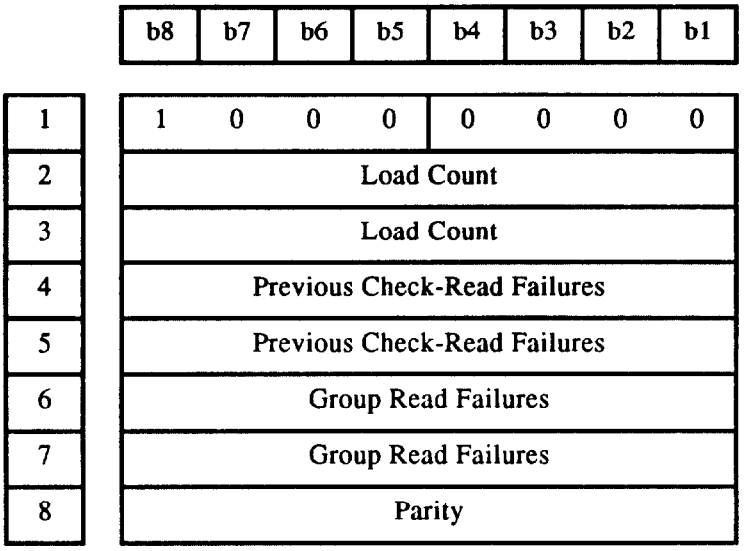

Figure 41 - Pack Item Number 8

9.4.8.1 Byte No. 1

- b8 to b5 shall specify Pack Item Number 8
- b4 to b1 shall be set to ZERO.

9.4.8.2 Bytes No. 2 and No. 3

These bytes shall specify the number of times the tape has been loaded following the last initialization of the tape (see 14.9 and 15.5) and prior to the last update of the log. One load consists of pulling the tape from its case, wrapping the tape around the drum, positioning the tape ready for use, unwrapping the tape and returning it into the case.

9.4.8.3 Bytes No. 4 and No. 5

These bytes shall specify the total number of frames that have failed a Read-After-Write check (see annex L) between the last update but one and the last update of the log.

This number does not include the frames which are written between the original frame and its next rewritten occurrence.

9.4.8.4 Bytes No. 6 and No. 7

These bytes shall specify the number of times it has not been possible to read successfully all data in a Recorded Data Group with the use of C1 and C2 only, between the last update but one and the last update of the log. This number includes all unsuccessful attempts.

9.4.9 Sub Data Block

A Sub Data Block shall consist of thirty-five 8-bit bytes:

- a 3-byte Header,
- three Pack Items,
- 8 bytes which are either Pack Items No. 3 or No. 4, or set to all ZEROs, or C1 bytes.

Copyright International Organization for Standardization
Provided by IHS under license with ISO
No reproduction or networking permitted without license from IHS
Not for Resale

There shall be 16 such Sub Data Blocks per track (see table 4) numbered sequentially. The Block Number is a running number allocated to each Sub Data Block within one track. In the Sub Zone 1 (see table 4) of a track these numbers run from 0 to 7, in the Sub Zone 2 they run from 8 to 15.

9.4.9.1 Header

The Header shall consist of

- 2 bytes: Sub ID, SW1 and SW2
- 1 byte: Sub ID, Parity

9.4.9.1.1 SW1 byte

	b8	b7	b6	b5	b4	b3	b2	b1
Even Block Number	Area ID				1	0	0	0
Odd Block Number	0	0	0	0	0	0	0	0

Figure 42 - SW1 byte

The 4-bit Area ID shall identify the current area of the tape (see 14). The settings of this field shall be as follows.

0000 : Device Area

X001 : Reference Area

X010 : System Area

X100 : Data Area

X101 : EOD Area

Other settings of this field are prohibited by this International Standard.

For a tape with a Single Data Space (see 15), bit X shall be set to ONE. For a tape with two partitions, bit X shall be set to ONE for Partition 0 and to ZERO for Partition 1.

9.4.9.1.2 SW2 byte

	b8	b7	b6	b5	b4	b3	b2	b1
Even Block Number	1	Pack ID			Block Number			
Odd Block Number	1	0	0	0	Block Number			

Figure 43 - SW2 byte

- b8 shall be set to ONE to indicate that the block is a Sub Data Block
- b7 to b5
  - on blocks with even Block Numbers these bits shall express in binary notation the number of Pack Items contained in the current Sub Data Block and the adjacent higher-numbered Sub Data Block. This number shall be either 6 or 7;

Copyright International Organization for Standardization
Provided by IHS under license with ISO
No reproduction or networking permitted without license from IHS
Not for Resale

. on blocks with odd Block Numbers these bits shall be set to 000.

- b4 to b1 shall specify in binary notation the Block Number from 0 to 15.

9.4.9.1.3 Sub ID Parity byte

The Sub ID Parity byte shall be set to (SW1 ⊕ SW2), where ⊕ is the Exclusive OR operator.

9.4.9.2 Data part of a Sub Data Block

The bytes following the Header shall be as follows:

- the first 24 bytes shall be three 8-byte Pack Items,
- the last eight bytes shall be either an 8-byte Pack Item or eight bytes set to all ZEROs, or eight bytes of C1 parity.

In Sub Data Blocks with an even Sub Data Block Number the last eight bytes shall be

- either all set to all ZEROs if the Pack ID is set to 6,
- or a Pack Item No. 3 or No. 4 if the Pack ID is set to 7.

In Sub Data Blocks with an odd Sub Data Block Number the last eight bytes shall be C1 parity bytes. They shall be computed over the last 32 bytes of the preceding even-numbered Sub Data Block and the 24 bytes in byte positions 4 to 27 of the Sub Data Block (i.e. the C1 parity is not computed over the Header bytes).

9.4.9.3 Summary of the structure of a Sub Data Block

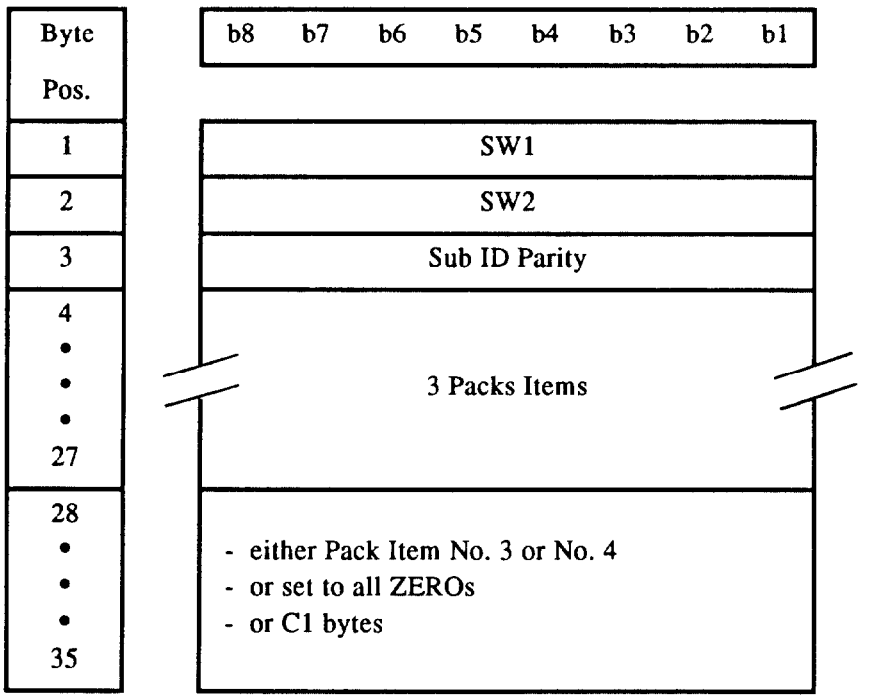

Figure 44 - Sub Data Block

9.4.9.4 Pack items location

The Pack Items are allocated group-wise to two areas of a track called Sub Zone 1 and Sub Zone 2 (see table 4). The grouping of the Pack Items and their allocation to Recorded Sub Data Blocks (see 12.2) depends on the

Copyright International Organization for Standardization
Provided by IHS under license with ISO
No reproduction or networking permitted without license from IHS
Not for Resale

setting of the Pack ID in the Header and on the location of the track in the tape layout (see 14 and figure 47), as denoted by the Area ID in the Header and the Absolute Frame Number (AFN) in Pack Items No. 3 and No. 4.

Pack Items with Sub Data Block Numbers from 0 to 7 are allocated to Sub Zone 1, Pack Items with Sub Data Block Numbers from 8 to 15 are allocated to Sub Zone 2.

In Table 3, the column "Contents" indicates the Pack Item Numbers of the Pack Items in the Recorded Sub Data Block. When the last eight bytes of a Recorded Sub Data Block are set to all ZEROs, this is denoted by (00); when these eight bytes are C1 parity bytes, this is denoted by C1.

The column "Tape Area" indicates the area of the tape in which the recorded Sub Data Blocks are recorded.

Table 3 - Pack Item location

Block Number	Pack ID	Area ID	n = AFN	Contents				Tape Area
even	6	X100	any	1	2	3	(00)	Data Area
		X010	70 < n < 96	5	7	3	(00)	System Log
			n < 71 or n > 95	3	3	3	(00)	Reference Area EOD Area
		X001	any					System Preamble
		X101						System Preamble
	7	X100	any	1	2	3	3 or 4	Data Area
		X010	70 < n < 96	5	7	3	3 or 4	System Log
			n < 71 or n > 95	3	3	3	3 or 4	Reference Area EOD Area
		X001	any					System Preamble
		X101						System Postamble
odd	6	X100	any	1	2	4	C1	Data Area
			70 < n < 96	6	8	4	C1	System Log
		X010	n < 71 or n > 95	4	4	4	C1	Reference Area EOD Area
		X001	any					System Preamble
		X101						System Postamble
	7	X100	any	1	2	4	C1	Data Area
		X010	70 < n < 96	6	8	4	C1	System Log
			n < 71 or n > 95	4	4	4	C1	Reference Area EOD Area
		X001	any					System Preamble
		X101						System Postamble

Copyright International Organization for Standardization
Provided by IHS under license with ISO
No reproduction or networking permitted without license from IHS
Not for Resale

10 Method of recording

The method of recording shall be

a ONE is represented by a flux transition at the beginning of a bit cell;

a ZERO is represented by the absence of flux transition in the bit cell.

10.1 Physical recording density

The maximum physical recording density shall be 3 002 ftpmm. The resulting nominal bit cell length is 0,333 µm.

10.2 Long-term average bit cell length

The long-term average bit cell length for each track shall be measured over its 128 Recorded Main Data Blocks (see 12.1). It shall be within ± 0,2 % of the nominal bit cell length.

10.3 Short-term average bit cell length

The short-term average bit cell length, referred to a particular bit cell, shall be the average of the preceding twenty bit cells. It shall be within ± 0,35 % of the long-term average bit cell length for the preceding track of the same azimuth.

10.4 Rate of change

The above defined short-term average bit cell length shall not change at a rate greater than 0,05 % per bit cell.

10.5 Bit shift

The maximum displacement of any ONEs zero crossing, exclusive of missing pulses, shall not deviate by more than 28 % from the expected nominal position defined by the short-term average bit cell length. See annex H for the method of measurement.

10.6 Read Signal Amplitude

The Average Signal Amplitude of an interchanged cartridge shall be

- at 83,4 ftpmm: between 60 % and 100 % of the nominal recorded level;
- at 333,6 ftpmm, 500,4 ftpmm, 1 001 ftpmm and 1 501 ftpmm: between 80 % and 118,9 % of the respective nominal recorded levels (annex F).

10.7 Maximum recorded levels

Recorded signals shall be erasable by overwriting. The limits imposed on the recorded levels for this reason are specified in annex F.

11 Track geometry

11.1 Track configuration

The helical track pattern is formed by the relationship between the direction of tape motion and the axis of rotation of a pair of heads, one of which has a positive azimuth angle and the other a negative azimuth angle. The direction of recording is away from the Tape Reference Edge. The track configuration is shown in figure 45.

Copyright International Organization for Standardization
Provided by IHS under license with ISO
No reproduction or networking permitted without license from IHS
Not for Resale

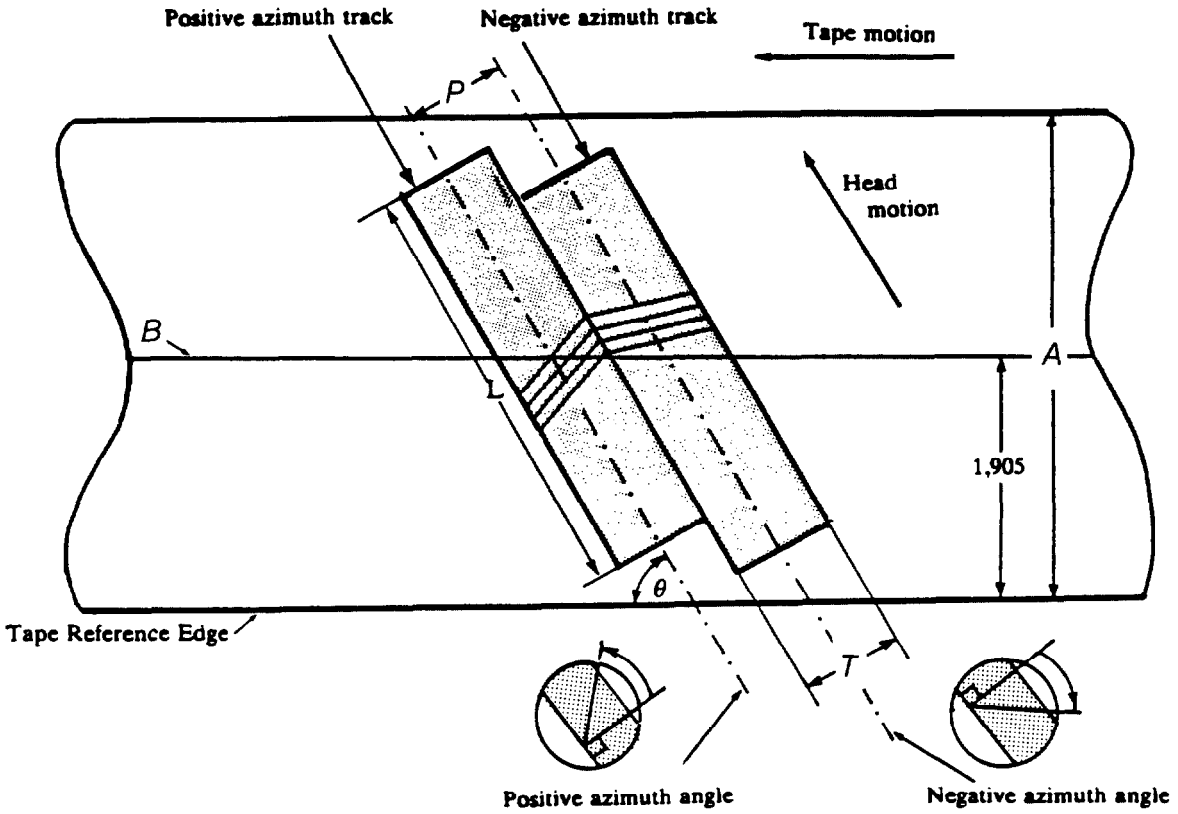

A : Tape width

L : Track length

P : Track pitch

T : Track width

B : Ideal tape centreline

θ : Track angle

Figure 45 - Track configuration (view on recording surface)

11.2 Average track pitch

The average track pitch, taken over any group of 30 consecutive tracks, shall be 13,591 µm ± 0,068 µm. The track pitch at a non-seamless append point (see 14.5.6.2) shall not be included in this average.

11.3 Variations of the track pitch

The change of track pitch between successive track pitches shall not exceed 2,0 %, excluding the effect of an appending operation (see 14.5.6).

11.4 Track width

The nominal track width is 13,591 µm.

The measured track width shall be 13,6 µm ± 2,2 µm.

Copyright International Organization for Standardization
Provided by IHS under license with ISO
No reproduction or networking permitted without license from IHS
Not for Resale

This requirement shall not apply at a non-seamless append point.

11.5 Track angle

The angle of each track with respect to the Tape Reference Edge shall be 6°22'59,5" ± 36,0".

11.6 Track edge linearity

The linearity of the leading edge of each track shall be within 8 µm, when measured according to annex K.

11.7 Track length

The length of each track shall be 23,501 mm ± 0,047 mm.

11.8 Ideal tape centreline

The ideal centreline of the tape is 1,905 mm from the Tape Reference Edge.

11.9 Azimuth angles

The positive azimuth angle shall be 20°0'59,5" ± 15'0,0".

The negative azimuth angle shall be 19°59'0,5" ± 15'0,0".

12 Recording of blocks on the tape

Each 8-bit byte of the Main Data Blocks and Sub Data Blocks shall be represented on the tape by a 10-bit pattern. Annex G specifies for each 8-bit byte the 10-bit pattern to be recorded. The bits of the 10-bit pattern are called Channel bits.

All information is recorded on the tape in units called Recorded Blocks. Each Recorded Block consists of 360 Channel bits. The different types of Recorded Block are defined in the following clauses.

12.1 Recorded Main Data Block

A Recorded Main Data Block shall consist of 360 Channel bits representing the 35 8-bit bytes of a Main Data Block preceded by a Sync field of 10 Channel bits with one of the following patterns:

a) 0100010001

b) 1100010001

Pattern a) shall be used for Q' = -1, DC = 0, Q = 1; pattern b) for Q' = 1, DC = 0, Q = 1 (see annex G). Either pattern may be used when there is no preceding pattern, and hence no value of Q'.

12.2 Recorded Sub Data Block

A Recorded Sub Data Block shall consist of 360 Channel bits representing the 35 8-bit bytes of a Sub Data Block preceded by a Sync field of 10 Channel bits. The Channel bit pattern of this Sync field shall be the same as that specified in 12.1 for Recorded Main Data Blocks.

12.3 Margin Blocks, Preamble Blocks and Postamble Blocks

These blocks shall have a length of 360 Channel bits consisting of the repeated Channel bit pattern 111.

12.4 Spacer Blocks

These blocks shall have a length of 360 Channel bits consisting of the repeated Channel bit pattern 100.

Copyright International Organization for Standardization
Provided by IHS under license with ISO
No reproduction or networking permitted without license from IHS Not for Resale

13 Format of a track

13.1 Track capacity

Each track shall consist of 196 Recorded Blocks. In the following description of the track layout ATF designates a particular type of Recorded Block specified in 13.3.

A track consists of seven zones, the names and contents of which are shown in table 4.

Table 4 - Format of a track

Sequence of recording ↓

Zone	Contents	Number of Blocks
Margin Zone 1	Margin Blocks	11
Sub Zone 1	Preamble Blocks Recorded Sub Data Blocks Postamble Blocks	2 8 1
ATF Zone 1	Spacer Blocks ATF Blocks Spacer Blocks	3 5 3
Main Zone	Preamble Blocks Recorded Main Data Blocks	2 128
ATF Zone 2	Spacer Blocks ATF Blocks Spacer Blocks	3 5 3
Sub Zone 2	Preamble Blocks Recorded Sub Data Blocks Postamble Blocks	2 8 1
Margin Zone 2	Margin Blocks	11

196

13.2 Positioning accuracy

The position of the start of the 99th block of a track, in the direction perpendicular to the Tape Reference Edge, shall be within 0,0267 mm from the ideal tape centreline. This is equivalent to 2 blocks along the track. The position of the start of a block is that of its first bit cell on the centreline of the track.

In addition, the positions of the starts of the 99th blocks of any pair of adjacent tracks shall not differ by more than 9,33 µm. This is equivalent to 0,7 blocks along the tracks.

13.3 Tracking scheme

Tracking is achieved by the automatic track finding (ATF) method. ATF Blocks are allocated to two zones of a track: the ATF Zone 1 and the ATF Zone 2 preceding and following the Main Zone, respectively. ATF Blocks are preceded and followed by three Spacer Blocks and consist of 360 Channel bits.

Each ATF Zone consists of a combination of four signals having different Channel bit patterns recorded at different physical recording densities. These signals are:

Copyright International Organization for Standardization
Provided by IHS under license with ISO
No reproduction or networking permitted without license from IHS
Not for Resale

ATF Pilot Signal f_1

Repeated pattern: 1 followed by 35 ZEROs

density: 83,4 ftpmm

ATF Sync Signal f_2 or f_3

Repeated pattern f_2: 100000000

density: 333,6 ftpmm

Repeated pattern f_3: 100000

density: 500,4 ftpmm

- ATF Sync Signal f_2 shall be recorded only on positive azimuth tracks.
- ATF Sync Signal f_3 shall be recorded only on negative azimuth tracks.
- ATF Sync Signals, whether f_2 or f_3, shall have a length of 180 Channel bits on even numbered frames and of 360 Channel bits on odd numbered frames.

ATF Space Signal f_4

Repeated pattern: 100

density: 100 1 ftpmm

The allocation of ATF signals to tracks is shown in figure 46. In this figure "spacer" stands for three Spacer Blocks and "Main Zone" for 130 recorded blocks. This allocation of ATF signals is repeated every four tracks and is dependent on the Frame Number (see 9.3.5.1.1).

NOTE 11 - An example of tracking error detection is as follows:

First the frequency and length of the ATF Sync Signal is detected. This is followed by sampling crosstalk from the ATF Pilot Signal of an adjacent track. A fixed period later, the crosstalk signal from the ATF Pilot Signal of the other adjacent track is sampled. The tracking error is the differ-ence between the levels of those two crosstalk signals.

Copyright International Organization for Standardization
Provided by IHS under license with ISO
No reproduction or networking permitted without license from IHS
Not for Resale

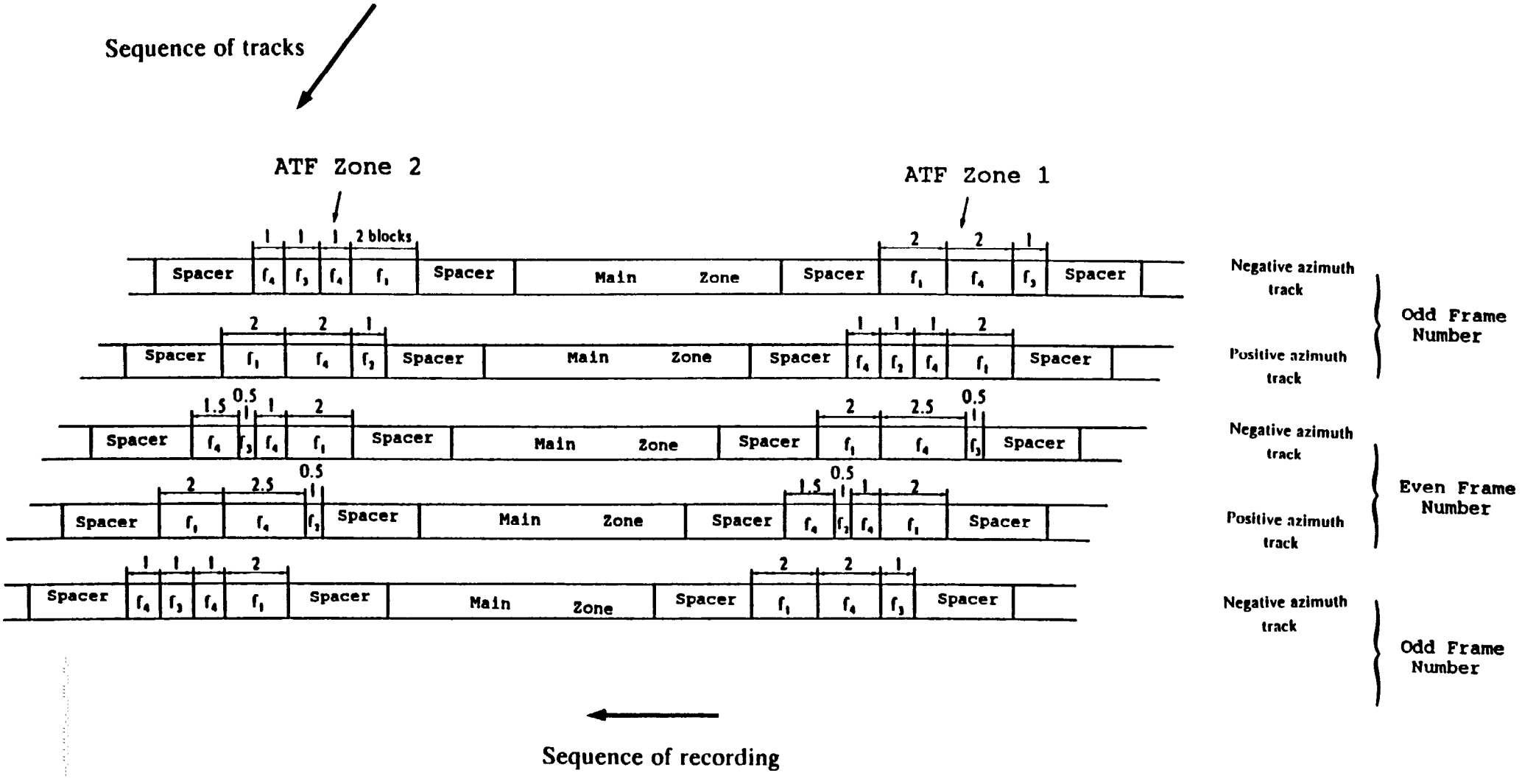

Figure 46 - ATF signals allocation

Copyright International Organization for Standardization
Provided by IHS under license with ISO
No reproduction or networking permitted without license from IHS
Not for Resale

14 Layout of a Single Data Space tape

A magnetic tape shall be recorded as a Single Data Space tape or as a Partitioned tape. The layout of a Single Data Space tape is specified in this clause, that of a Partitioned tape in clause 15.

The layout of the Single Data Space tape consists of six areas:

- the Device Area
- the Reference Area
- the System Area
- the Data Area
- the EOD Area
- the Post-EOD Area

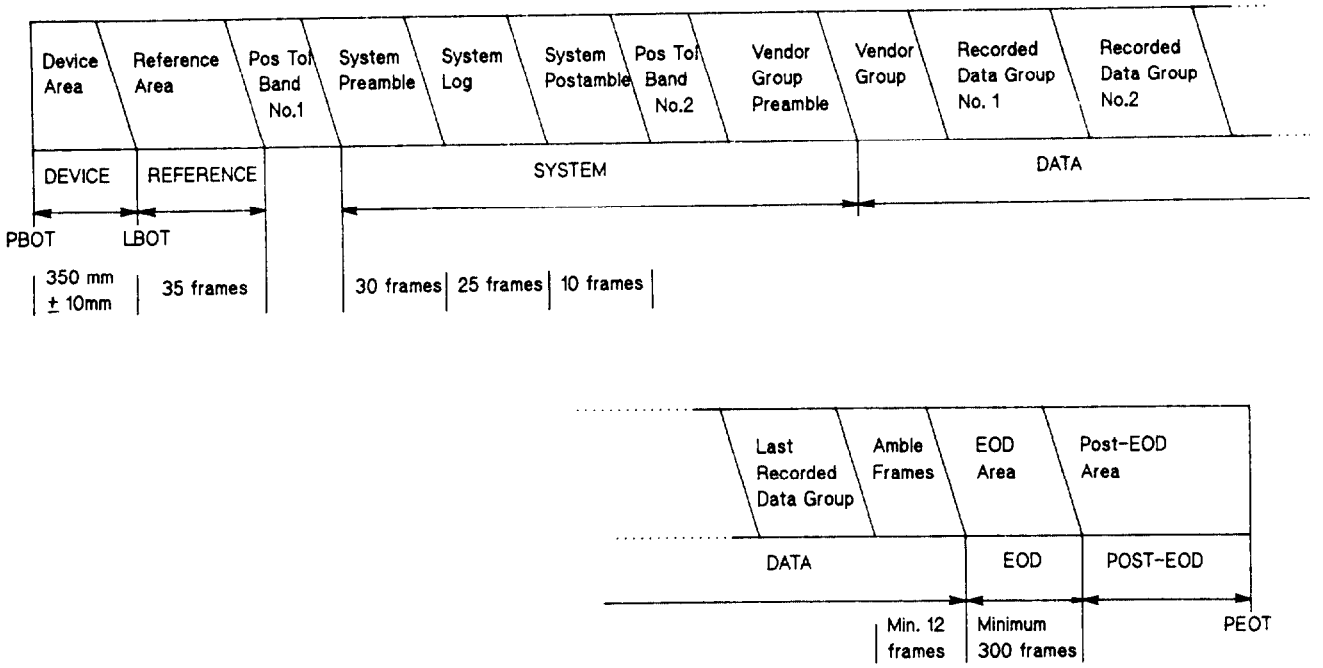

Figure 47- Layout of a Single Data Space tape

14.1 Device Area

This area shall be the first area on the magnetic tape and shall extend from PBOT to LBOT. It shall not be used for writing data for interchange. Its length, measured parallel to the Tape Reference Edge, from PBOT to the first bit of the first block of the first recorded track of the Reference Area, shall be 350 mm ± 10 mm. It shall consist of three zones : a spin-up zone, a test zone and a guard zone.

The first zone of the Device Area is a spin-up zone. It is the part of the tape which is wrapped around the drum when the tape is loaded into the drive.

The spin-up zone shall be followed by a test zone available for read/write purposes. The contents of these two zones are not specified by this International Standard. However, if a track in these zones complies with the track format of table 4 the Area ID field of the Sub Data Blocks shall be set to 0000.

Copyright International Organization for Standardization
Provided by IHS under license with ISO
No reproduction or networking permitted without license from IHS
Not for Resale

The test zone shall be followed by a guard zone of length 9 mm minimum, in which no recording is permitted.

14.2 Reference Area

This area shall consist of 35 Tape Management frames (see 16.3), of which the first starts at LBOT and has an Absolute Frame Number of 1. The Reference Area is used as the physical reference when updating the System Log.

14.3 Position tolerance band No. 1

This band shall have a nominal length equivalent to five frames, with a minimum length of zero and a maximum length of 10 frames. It is used to accommodate the positioning tolerances when updating the System Log. Discontinuities and repetitions of the Absolute Frame Number may occur in this band. The recorded signals may be ill-defined in this band.

14.4 System Area

This area shall consist of the System Preamble, System Log, System Postamble, Position Tolerance Band No. 2, and the Vendor Group Preamble.

14.4.1 System Preamble

The System Preamble shall consist of 30 Tape Management frames (see 16.3), having the Absolute Frame Numbers 41 to 70.

14.4.2 System Log

The System Log shall consist of 25 System Log frames (see 16.2), having the Absolute Frame Numbers 71 to 95.

NOTE 12 - The history data in the System Log cannot be relied upon to be always accurate, because drives cannot update the log if the Write-inhibit Hole is open. It may also be destroyed during initialization (see 14.9).

14.4.3 System Postamble

The System Postamble shall consist of 10 Tape Management frames, having the Absolute Frame Numbers 96 to 105.

NOTE 13 - It is recommended that the continuum comprising the System Preamble, System Log and System Postamble be written in a continuous motion when the System Log is updated.

14.4.4 Position Tolerance Band No. 2

This band shall have a nominal length equivalent to 15 frames. Its actual length depends on the actual length of the Position Tolerance Band No. 1 and on the actual position of the first frame of the Vendor Group Preamble, and hence may vary from 0 to 30 frames. Discontinuities and repetitions of the Absolute Frame Number may occur in this band. The recorded signals may be ill-defined in this band.

14.4.5 Vendor Group Preamble

The Vendor Group Preamble shall consist of 30 Tape Management frames having the Absolute Frame Numbers 121 to 150. The Vendor Group Preamble shall immediately precede the Vendor Group and be contiguous with it.

14.5 Data Area

This area shall consist of the Vendor Group and one or more Recorded Data Groups. A frame in the Data Area shall be either an Amble Frame (see 16.1) or, within a Recorded Data Group, a recorded representation of a Sub-Group. A Logical Frame Number is allocated to each frame. The Logical Frame Number of an Amble

Copyright International Organization for Standardization
Provided by IHS under license with ISO
No reproduction or networking permitted without license from IHS
Not for Resale

Frame is zero. The Logical Frame Number of a frame within a Recorded Data Group is the number of the Sub-Group it represents. It is expressed by bits 1 to 6 of the Logical Frame ID (see 9.3.2.1.3).

The last Recorded Data Group shall be followed by at least 12 Amble Frames.

14.5.1 Vendor Group

A Vendor Group is the recorded instance of Basic Group No. 0, the content of which is not specified by this International Standard (see annex M). The Vendor Group is formed from the bytes of that Basic Group by applying the operations described in 9.3 and 9.4 and recording the resulting frames. The first of these frames shall have the Absolute Frame Number 151.

In addition none or either or both of two further operations, namely ECC3 (see 14.5.3) and Repeated Frames (see 14.5.5) may be applied.

No unrecorded space or physical discontinuity or seam or Absolute Frame Number discontinuity or repetition may occur within a Vendor Group.

14.5.2 Recorded Data Group

Each Recorded Data Group is a recorded instance of a Basic Group, and is formed from the data sent from a host computer by applying the operations described in clause 9 and recording the resulting frames.

In addition, none or any combination of three further operations may be applied. These are ECC3 (see 14.5.3), Multiple Recorded Instances (see 14.5.4) and Repeated Frames (see 14.5.5). No unrecorded space or physical discontinuity or seam or Absolute Frame Number discontinuity or repetition may occur within a Recorded Data Group.

14.5.3 ECC3

The Error Correction Code 3 has the capability of correcting any two tracks which are bad in a Recorded Data Group. The ECC3 data is derived from the 22 G1 Sub-Groups of the Basic Group to form a 23rd G1 Sub-Group. It uses the following Reed-Solomon code:

$$GF(2^8)\ (46, 44, 3)$$

The calculation on $GF(2^8)$ is defined by the following polynomial:

$$G(x) = x^8 + x^4 + x^3 + x^2 + 1 \qquad \alpha = (00000010)$$

The parity check matrix is as follows:

Copyright International Organization for Standardization
Provided by IHS under license with ISO
No reproduction or networking permitted without license from IHS
Not for Resale

$$\begin{bmatrix} 1 & 1 & 1 & \ldots\ldots & 1 & 1 & 1 \\ \alpha^{45} & \alpha^{44} & \alpha^{43} & \ldots\ldots & \alpha^{2} & \alpha & 1 \end{bmatrix}$$

$$\begin{bmatrix} D_{8N + 2(M + 1) + L,1} \\ D_{8N + 6M + L\ \ \ ,1} \\ D_{8N + 2(M + 1) + L,2} \\ D_{8N + 6M + L\ \ \ ,2} \\ \vdots \\ D_{8N + 6M + L\ \ \ ,22} \\ P_{8N + 2(M + 1) + L,23} \\ Q_{8N + 6M + L\ \ \ ,24} \end{bmatrix}$$

N = 0, 1, 2, ..., 719
M = 0,1 (N = 0, ..., 718)
M = 0 (N = 719)
L = 0,1

$D_{x,y}$ x = User data byte number in a G1 Sub-Group

$P_{x,y}$ x = Parity byte number in the ECC3 G1 Sub-Group y = G1 Sub-Group number

$Q_{x,y}$ x = Parity byte number in the ECC3 G1 Sub-Group

The ECC3 G1 Sub-Group is transformed according to the procedure of 9.3 to form the Recorded Main Data Blocks of the two tracks of the ECC3 frame. As a result of this transformation, the *P* parity bytes are recorded in the first (i.e. positive azimuth) track of the ECC3 frame and the *Q* parity bytes are recorded in the second (i.e. negative azimuth) track of the ECC3 frame. The data recorded in the Sub Data Areas is obtained according to 9.4.

14.5.4 Multiple recorded instances

Each Basic Group, other than Basic Group No. 0, may be recorded in a sequence of contiguous instances. The maximum number of such instances shall be eight. Within a sequence of Recorded Data Groups which are derived from the same Basic Group the values of Frame Number (see 9.3.5.1.1), Position (see 9.4.1.1) and Absolute Frame Number (see 9.4.3.2 and 9.4.4.2) will be different. There will also be differences in the values of the Parity bytes computed from these. There may also be differences in the number of Repeated Frames (see 14.5.5) per Recorded Data Group in such a sequence.

14.5.5 Repeated frames

In the Data Area, a frame within a Recorded Data Group may be repeated by rewriting it further along the tape. The repeated frame may be written after zero, one, two, three, four or five other frames have been written. Each such sequence (i.e. the original or repeated frame and the one, two, three, four or five following frames) can be repeated multiple times, e.g. to allow skipping over bad areas on the tape. The maximum number of instances of a sequence shall be 128, i.e. the original and up to 127 repetitions.

Intermediate frames, i.e. those frames written between the original frame and its next occurrence shall start with the frame the Logical Frame Number of which is the next in the normal sequence, and shall follow the

Copyright International Organization for Standardization
Provided by IHS under license with ISO
No reproduction or networking permitted without license from IHS
Not for Resale

correct sequence thereafter. The correct sequence requires successive frames to have Logical Frame Numbers which increment by one until the last frame in the Recorded Data Group, or the ECC3 frame if present, after which they restart from zero (for an Amble Frame) or one (for the first frame of the next Recorded Data Group). Amble Frames are allowed in this sequence, provided the limit of five Intermediate Frames is not exceeded. The final occurrence of the repeated frame shall be followed by the Intermediate Frames written in the correct sequence.

14.5.6 Appending and overwriting

When new data is appended to data already recorded on tape, or existing data is overwritten by new data, the point at which recording may start shall be referenced to the last frame (Frame A in figure 48) of a Recorded Data Group. If Multiple Recorded Instances of the last group exist, the relevant Recorded Data Group is the last in the sequence. If Repeated Frames have been recorded, the relevant frame is the last repetition of the last frame. The smallest unit of appending or overwriting is a Recorded Data Group.

NOTE 14 - After overwriting commences, all data between the current recording point and PEOT is logically inaccessible.

The rules for appending and overwriting are identical. For simplicity, the following description refers only to appending.

Data may be appended to the tape by either the seamless or non-seamless methods. An appending operation may be described as seamless only if the appended tracks are placed so as to form a continuous sequence with the previous tracks. No track shall be partially overwritten to the point of being unreadable nor shall any gaps be left between tracks.

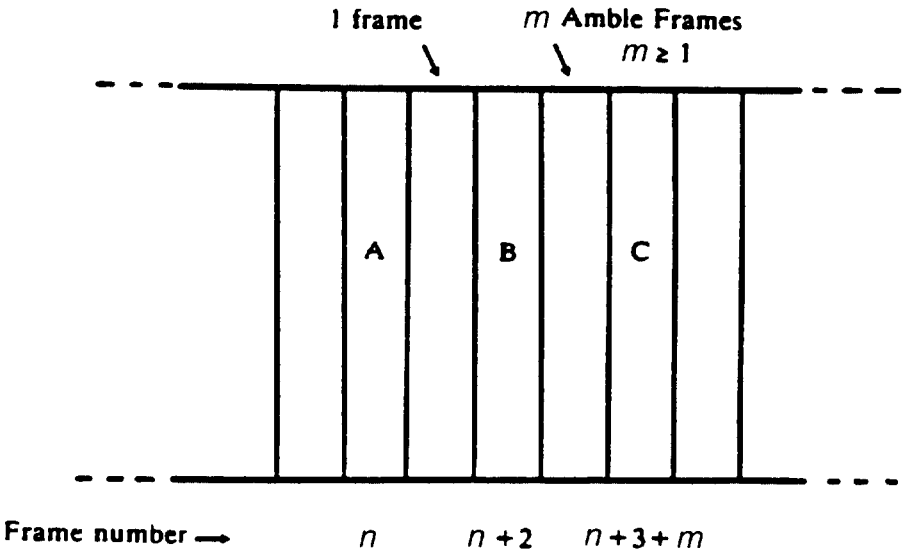

Figure 48 - Appending rules

The frames up to and including frame A on figure 48 contain information which is to be retained. The append starts with Amble Frames at frame B and the information at frame C.

14.5.6.1 Seamless appending rules

Rule 1. There shall be one frame between frame A and frame B, i.e. if frame A has an Absolute Frame Number (AFN) of n, then frame B shall have an AFN of n+2.

Copyright International Organization for Standardization
Provided by IHS under license with ISO
No reproduction or networking permitted without license from IHS
Not for Resale

Rule 2. The frame written between frames A and B shall be contiguous with frame A, i.e. no unrecorded space between A and B is permitted, nor is any discontinuity or repetition of AFNs, nor is any physical discontinuity. The Group Number of this frame shall be greater than that of Frame A, unless this frame is an Amble Frame (see 16.1), in which case its Group Number shall be equal to that of Frame A. The content of this frame shall be ignored.

Rule 3. There shall be a minimum of one Amble Frame between frames B and C, i.e. if frame B has an AFN of n+2, then frame C shall have an AFN of n+4 minimum. No unrecorded space, physical discontinuity, or AFN discontinuity or repetition is allowed between frames B and C.

Rule 4. The position of the first track of frame B (AFN = n+2), as measured along the length of the tape at the point shown in figure 49, shall be at a distance of x = 244,5 µm ± 40,0 µm from the first track of the frame with AFN = n+1.

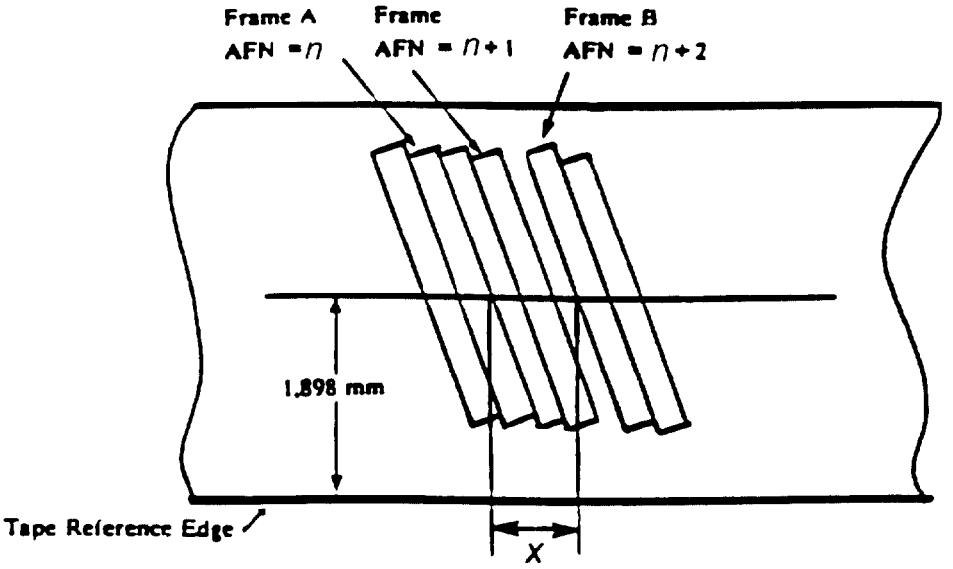

Figure 49 - Tolerance on seamless appending

14.5.6.2 Non-seamless appending rules

Rule 1. The distance between frame A and frame B shall be sufficient for a minimum of one and a maximum of 11 frames. No unrecorded space is permitted between frame A and frame B. One or more frames between frame A and frame B may be ill-defined, e.g., as a result of partial overwriting at an append point.

Rule 2. Discontinuities and repetitions of AFN are permitted between frame A and frame B, provided that, where frame A has an AFN of n,

- all frames have an AFN greater than n, and
- frame B has an AFN of n+2 minimum and n+12 maximum.

Rule 3. Amble Frames (see 16.1) between frame A and frame B shall have a value of Group Number which is equal to that of frame A. Other frames between frame A and frame B shall have a value of Group Number which is greater than that of frame A.

Rule 4. There shall be a minimum of 29 frames between frames B and C, i.e. if frame B has an AFN of n+2 ≤ n' ≤ n+12, then frame C shall have an AFN of n'+30 minimum. No unrecorded space, physical discontinuity or seam or AFN discontinuity or repetition is allowed between frames B and C.

Copyright International Organization for Standardization
Provided by IHS under license with ISO
No reproduction or networking permitted without license from IHS
Not for Resale

14.6 EOD Area

The Data Area shall be followed by an EOD Area.

It shall consist of Tape Management Frames, and shall start after the last Amble Frame in the sequence of Amble Frames which follows the last Recorded Data Group. If the length of tape between the last Amble Frame and PEOT is greater than or equal to 300 frames, the EOD Area shall consist of at least 300 frames. If the length of tape between the last Amble Frame and PEOT is less than 300 frames, the length of the EOD Area shall equal that length.

More than one EOD Area may exist on a tape. The EOD Area closest to LBOT shall be the only valid one for information interchange.

14.7 Post-EOD Area

If the end of the EOD Area is not coincident with PEOT, the EOD Area shall be followed by a Post-EOD Area which extends to PEOT. The contents of this Post-EOD Area are not defined for interchange.

14.8 Early Warning Point - EWP

For a new or bulk-erased tape the position of the EWP is calculated by the drive writing the tape. The calculation shall ensure that the EWP is not less than 500 mm before PEOT. Until data is recorded beyond the calculated EWP no indication of its position is recorded on the tape. When data is first recorded beyond the calculated EWP, the setting of the AEWP bit (see 9.2.3.1.14) changes from ZERO to ONE in the last Basic Group which is completely or partially recorded before that point. This changeover then denotes the position of the EWP when the tape is subsequently read.

For a tape containing data which is being overwritten, if the point at which overwriting commenced is before the EWP as defined prior to the commencement of overwriting, a new position of the EWP is calculated by the drive currently writing the tape. The calculation shall ensure that the EWP is not less than 500 mm before PEOT. When data is recorded beyond this calculated EWP, the setting of the AEWP bit (see 9.2.3.1.14) changes from ZERO to ONE in the last Basic Group which is completely or partially recorded before that point. This changeover then denotes the position of the EWP when the tape is subsequently read.

For a tape containing data which is being overwritten, if the AEWP bit changes from ZERO to ONE prior to the point at which overwriting commenced, the position of the EWP is denoted by that changeover, i.e. the AEWP bit is set to ONE in all overwriting groups.

14.9 Initialization

Initialization is a procedure which shall be carried out before the first use of a tape cartridge for recording user data (it may be also used at other times). The procedure ensures that there shall be no unrecorded space between LBOT and the end of the Vendor Group. The extent from LBOT to the end of the Vendor Group shall be written as a continuum in which the Position Tolerance Bands No. 1 and No. 2 shall have their nominal number of frames of 5 and 15 frames, respectively. The 5 Tape Management Frames in the Position Tolerance Band No. 1 shall have their Area ID set to the Reference Area ID (see 9.4.9.1.1).

If an initialization pass is performed on a recorded tape, it will destroy all data thereon, including the history data in the System Log(s).

NOTE 15 - The tape layout is such that a separate initialization pass on a new or bulk-erased tape is not necessary prior to the recording of the first Recorded Data Group. The Reference Area, System Area and Vendor Group can be recorded at a time immediately prior to the recording of the first Recorded Data Group.

Copyright International Organization for Standardization
Provided by IHS under license with ISO
No reproduction or networking permitted without license from IHS
Not for Resale

15 Layout of Partitioned tape

A Partitioned tape provides on one magnetic tape two independent partitions, each of which has a structure and properties similar to those of the recorded parts of a Single Data Space tape.

With the exception of the differences described hereafter, all of the foregoing descriptions of the recorded format shall apply to each partition of a Partitioned tape.

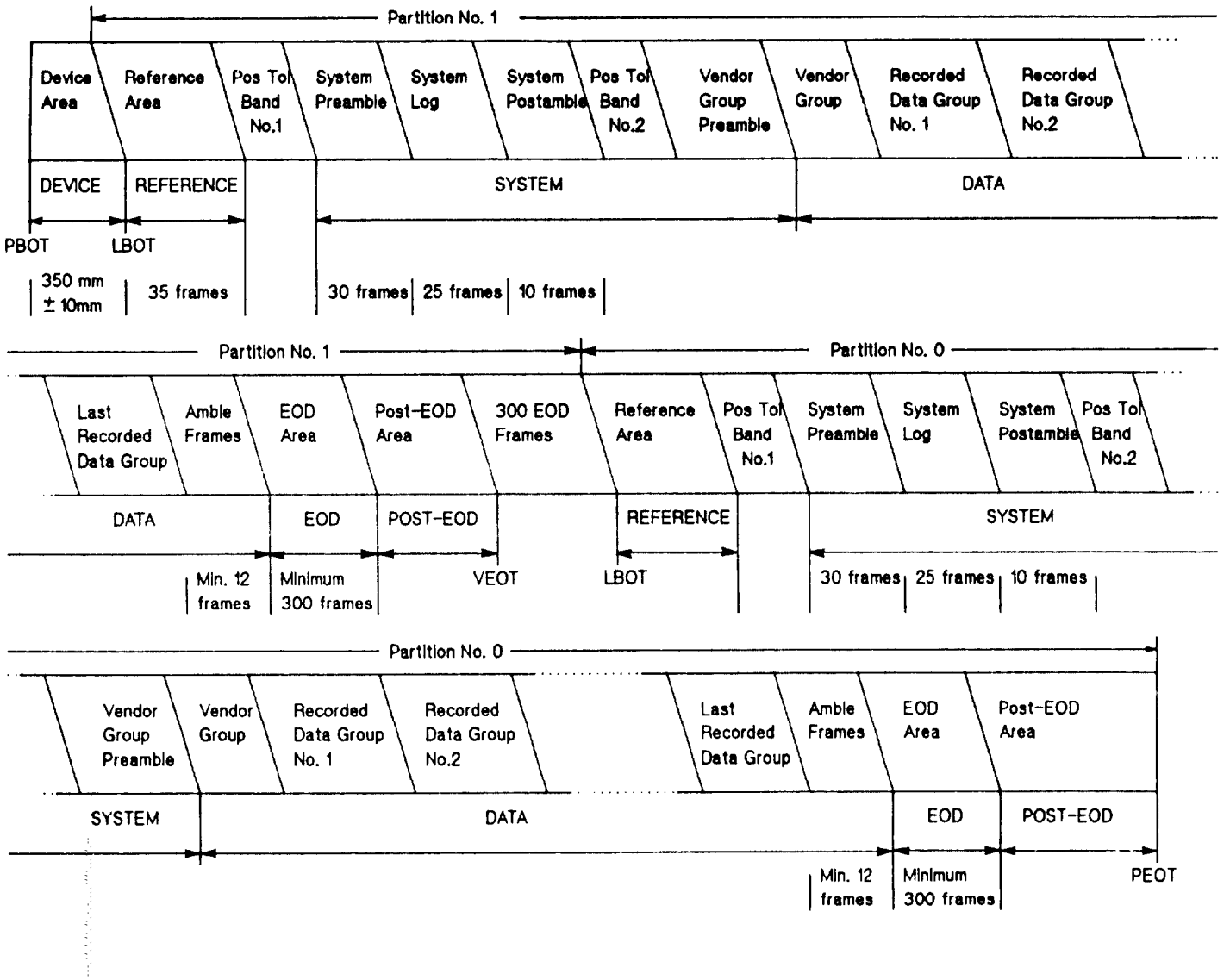

Figure 50 - Layout of a partitioned tape

15.1 Overall magnetic tape layout

The layout of a Partitioned tape shall consist of the Device Area, Partition 1 and Partition 0, which shall be located in that order from PBOT to PEOT.

Copyright International Organization for Standardization
Provided by IHS under license with ISO
No reproduction or networking permitted without license from IHS
Not for Resale

15.1.1 Device Area

This area shall be identical with that of a Single Data Space tape.

15.1.2 Partition 1

15.1.2.1 Size of Partition 1

The total number of frames in Partition 1 shall be recorded in bytes No. 5 to No. 7 of Pack Items No. 3 and No. 4 in the System Area of Partition 1.

15.1.2.2 System Log

The data fields in Pack Items No. 5, No. 6, No. 7 and No. 8 in the System Log shall contain the sums of the values of the appropriate parameters pertaining to each partition. This log is therefore a history of use of the entire tape.

15.1.2.3 Virtual End Of Tape (VEOT)

The VEOT shall be a reference point at a distance equivalent to 300 frames before the partition boundary. This reference point is intended for use in a manner identical with that of PEOT on a Single Data Space tape, i.e. no recording shall occur within Partition 1 beyond VEOT, except during initialization (see 15.5).

The space between VEOT and the partition boundary shall contain Tape Management Frames which are identical with those of the EOD Area of Partition 1.

NOTE 16 - After overwriting commences (see 14.5.6) in Partition 1, all data between the current recording point and VEOT is logically inaccessible. Data in Partition 0 is unaffected.

15.1.2.4 Partition 1 Early Warning Point - EWP

Within an empty Partition 1 (see 15.4) the position of the EWP is calculated by the drive writing the tape. The calculation shall ensure that the EWP is not less than 2045 frames before VEOT. Until data is recorded beyond the calculated EWP no indication of its position is recorded on the tape. When data is first recorded beyond the calculated EWP, the setting of the AEWP bit (see 9.2.3.1.14) changes from ZERO to ONE in the last Basic Group which is completely or partially recorded before that point. This changeover then denotes the position of the EWP when the tape is subsequently read.

For a Partition 1 containing data which is being overwritten, if the point at which overwriting commenced is before the EWP as defined prior to the commencement of overwriting, a new position of the EWP is calculated by the drive currently writing the tape. The calculation shall ensure that the EWP is not less than 2 045 frames before VEOT. When data is recorded beyond this calculated EWP, the setting of the AEWP bit (see 9.2.3.1.14) changes from ZERO to ONE in the last Basic Group which is completely or partially recorded before that point. This changeover then denotes the position of the EWP when the tape is subsequently read.

For a Partition 1 containing data which is being overwritten, if the AEWP bit changes from ZERO to ONE prior to the point at which overwriting commenced, the position of the EWP is denoted by that changeover, i.e. the AEWP bit is set to ONE in all overwriting groups in Partition 1.

NOTE 17 - The length of tape occupied by 2 045 frames is approximately 500 mm.

15.1.2.5 Post-EOD Area

If the end of the EOD Area occurs before VEOT, it shall be followed by a Post-EOD Area which extends to VEOT. This Post-EOD Area shall consist of recorded frames in which the Area ID (see 9.4.9.1.1) indicates Partition 1, but the contents of which are not otherwise specified for interchange.

Copyright International Organization for Standardization
Provided by IHS under license with ISO
No reproduction or networking permitted without license from IHS
Not for Resale

15.1.3 Partition 0

15.1.3.1 LBOT

The LBOT is the partition boundary. The first frame after this point shall have the Absolute Frame Number of one.

15.1.3.2 System Log

The Load Count fields (bytes No. 2 and No. 3 in Pack Item No. 8) shall be set to all ZEROs.

15.2 Area ID

The most significant bit of the Area ID (see 9.4.9.1.1) shall be set to ONE for Partition 0 and to ZERO for Partition 1.

15.3 System Area Pack Items No. 3 and No. 4

In the System Area of Partition 0, bytes No. 5 to No. 7 of Pack Items No. 3 and No. 4 shall be set to all ONEs.

15.4 Empty partitions

On a Partitioned tape, of which only one partition contains Recorded Data Groups, the other Partition shall be regarded as empty.

An empty Partition 1 shall contain

- a Reference Area
- a System Area
- a Data Area, comprising a Vendor Group and at least 35 Amble Frames
- a minimum of 2345 Tape Management Frames identical with those of the EOD Area of Partition 1.

The Vendor Group Preamble, the Data Area and the following Tape Management Frames shall form a continuum which extends to the partition boundary and in which no unrecorded space, physical discontinuity or seam or Absolute Frame Number discontinuity or repetition is permitted.

An empty Partition 0 shall contain

- a Reference Area
- a System Area
- a Data Area, comprising a Vendor Group and at least 35 Amble frames
- an EOD Area of length 300 frames minimum.

The Vendor Group Preamble, the Data Area and the EOD Area shall form a continuum in which no unrecorded space, physical discontinuity or seam or Absolute Frame Number discontinuity or repetition is permitted.

15.5 Initialization of Partitioned tapes

When a new or bulk-erased tape is to be used as a Partitioned tape, the recording of Recorded Data Groups starts in one partition, the other is empty. In order to define the position of the partition boundary, to ensure that the empty partition conforms to the requirements of 15.4, and to assist in efficient management of the tape position, it is convenient to perform an initialization pass prior to the first recording. Such initialization should write, as a continuum, empty Partitions 1 and 0 as defined above.

If an initialization pass is performed on a recorded tape, it may destroy all data thereon, including history data in the System Log(s).

Copyright International Organization for Standardization
Provided by IHS under license with ISO
No reproduction or networking permitted without license from IHS
Not for Resale

16 Housekeeping frames

Housekeeping frames shall not contain any user data, separators or Index. Data shall be recorded only in the Sub Data Area of each track, this data being dependent on the area of the magnetic tape where the housekeeping frame is recorded. The Recorded Main Data Blocks of each track shall be generated by forming a G1 Sub-Group in which each byte is set to all ZEROs and by applying the procedure of 9.3. The data recorded in the Sub Data Area is defined in 9.4.

There are three types of Housekeeping Frames, namely Amble Frames, System Log Frames and Tape Management Frames.

16.1 Amble Frames

Amble Frames are permitted only in the Data Area. Their Logical Frame Number shall be zero. The relevant data in their Sub Data Areas shall refer to the Basic Group which is represented by the preceding Recorded Data Group.

Amble Frames are not permitted within a Recorded Data Group, except within a run of Intermediate Frames (see 14.5.5), and are not permitted before the Vendor Group.

An Amble Frame shall be preceded only by another Amble Frame or the last frame of a Recorded Data Group, except at an append point (see 14.5.6.1 and 14.5.6.2).

16.2 System Log Frames

System Log Frames shall be recorded within the System Area and with Absolute Frame Numbers in the range 71 to 95. Log data on the history of the use of the tape shall be recorded in the Sub Data Area of each System Log Frame.

16.3 Tape Management Frames

Tape Management Frames shall be recorded only in

- the Reference Area;
- the System area, except in the System Log;
- the EOD Area;
- between VEOT and the partition boundary.

The Sub Data Area of a Tape Management Frame shall contain data only from Pack Items No. 3 and No. 4.

Copyright International Organization for Standardization
Provided by IHS under license with ISO
No reproduction or networking permitted without license from IHS
Not for Resale

Annex A

(normative)

Measurement of the light transmittance of the prisms

A.1 The following description outlines the measuring equipment and measuring method to be used for measuring the light transmittance of the prisms.

Transmittance is the ratio between the reading obtained from the measuring equipment with the cartridge in position and the reading obtained with a reference prism in position.

Transmittance of the cartridge prism:

$$\frac{P_c \text{ (Cartridge prism)}}{P_r \text{ (Reference prism)}} \times 100\ \%$$

A.2 Radiation source

An infra-red light-emitting diode (LED) with the following parameters shall be used:

Wavelength at peak emission: 850 nm ± 50 nm

Half-power bandwidth: ± 50 nm

A.3 Radiation receiver

A silicon photo diode shall be used. It shall be operated in the short-circuit mode.

A.4 Optical assembly

The optical assembly for testing the cartridge prisms shall be as shown in figure. A.2. All surfaces shall be matt black. Both optical systems shall be calibrated using the reference prism mounted as in figure A.1.

All measurements shall be made in a dark room.

A.5 Reference prism

Transmittance: 95 % for a wavelength of 850 nm ± 50 nm

Dimensions: see figure A.3

A.6 Measuring circuitry

As described in D.2.6; switch S to be in position 0.

Copyright International Organization for Standardization
Provided by IHS under license with ISO
No reproduction or networking permitted without license from IHS
Not for Resale

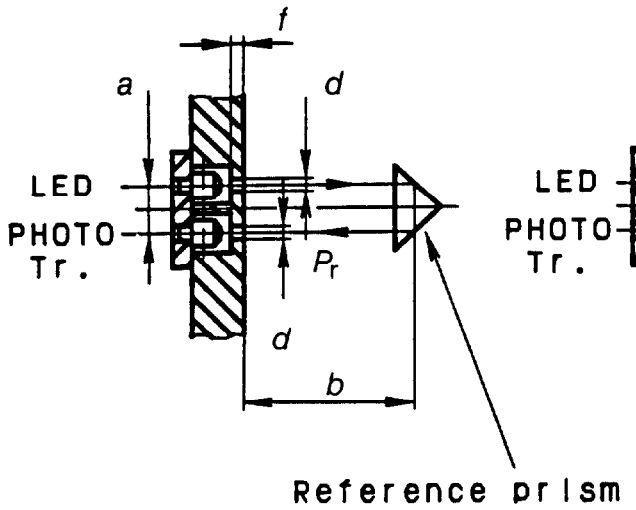

Figure A.1 - Reference prism

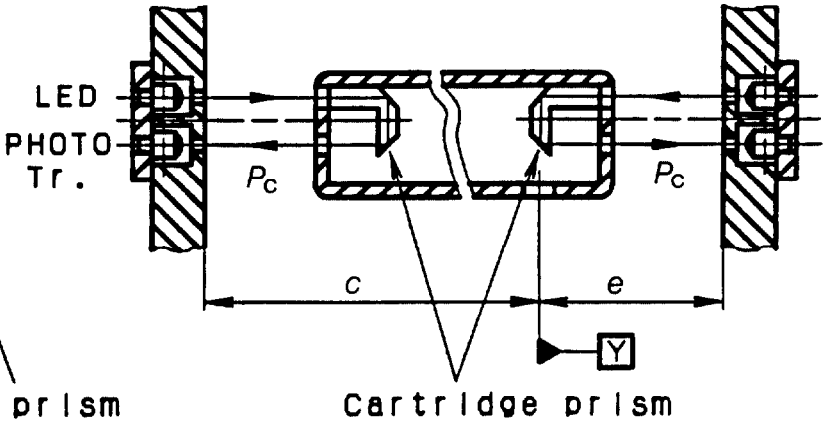

Figure A.2 - Cartridge prism

a = 3,75 mm d = 1,00 mm

b = 13,00 mm e = 13,20 mm

c = 64,20 mm f = 1,00 mm

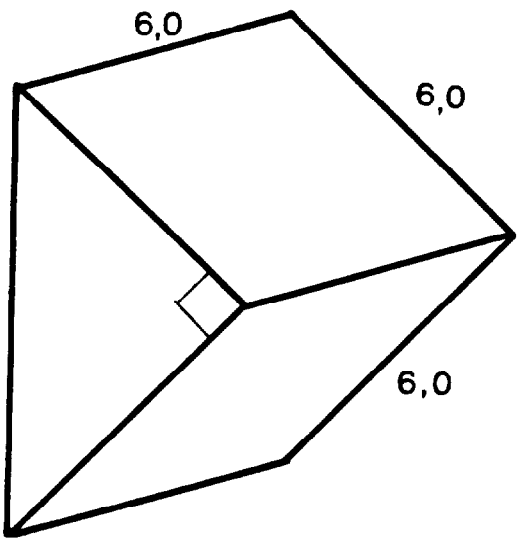

Figure A.3 - Perspective view of the reference prism

Copyright International Organization for Standardization
Provided by IHS under license with ISO
No reproduction or networking permitted without license from IHS
Not for Resale

Annex B

(informative)

Recognition holes

In future applications the case of the cartridge specified by this Standard may be loaded with different types of tape. In order to recognize these situations the following combinations of states of the Recognition Holes are recommended.

Table B.1 - Recognition holes

Hole No.	1	2	3	4	Type of tape
	0	0	1	0	Cleaning tape
	0	0	1	1	Pre-recorded 13 µm thick tape with wider tracks
	0	1	1	1	Pre-recorded 9,0 µm thick tape with wider tracks

1 = hole open
0 = hole closed

The remaining nine combinations are not yet allocated and should not be used.

Copyright International Organization for Standardization
Provided by IHS under license with ISO
No reproduction or networking permitted without license from IHS
Not for Resale

Annex C

(informative)

Means to open the lid

C.1 Figure C.1 shows the bottom side of the case. The two square areas defined by dimension a = 2 mm are the contact areas where the force opening the lid is to be applied.

C.2 Figure C.2 and C.3 show an example of implementation. The drive in which the cartridge is introduced has two pins positioned so that their ends lie below the two areas shown in figure C.1 when the cartridge is inserted. When the cartridge is then pushed downwards (figure C.2) the pins open the lid completely (figure C.3).

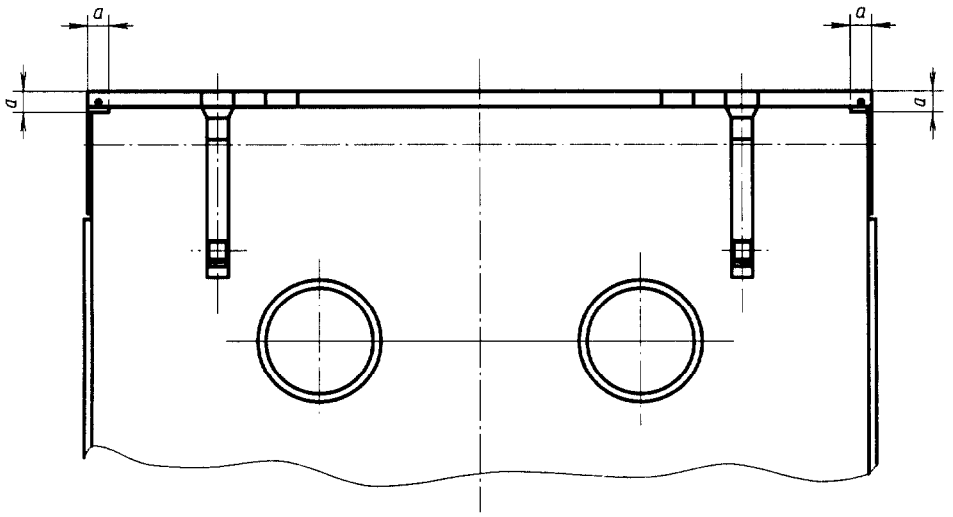

Figure C.1 - Bottom side of the case

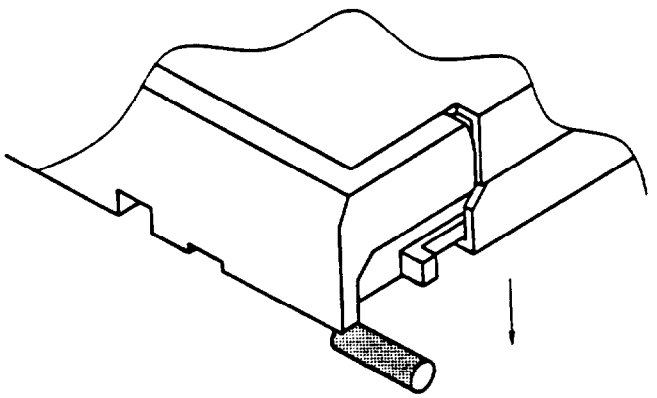

Figure C.2 - Intermediate position within the drive

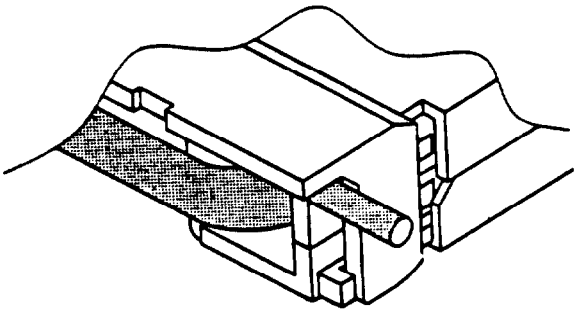

Figure C.3 - Final position within the drive

Copyright International Organization for Standardization
Provided by IHS under license with ISO
No reproduction or networking permitted without license from IHS
Not for Resale

Annex D

(normative)

Measurement of light transmittance of tape and leaders

D.1 Introduction

The following description outlines the general principle of the measuring equipment and measuring method to be applied when measuring the light transmittance of tape.

For the purpose of this International Standard "light transmittance" is defined by convention as the relationship between the reading obtained from the measuring equipment with the test piece inserted and the reading obtained when no test piece is present. The transmittance value is expressed as the percentage ratio of the two readings.

D.2 Description of the measuring equipment

The equipment shall consist of

- the radiation source;
- the radiation receiver;
- the measuring mask;
- the optical path;
- the measuring circuitry.

D.2.1 Radiation source

An infra-red light-emitting diode (LED) with the following parameters shall be used:

Wavelength at peak emission : 850 nm ± 50 nm

Half-power bandwidth : ± 50 nm

D.2.2 Radiation receiver

A flat silicon photo diode shall be used. It shall be operated in the short circuit mode.

D.2.3 Measuring mask

The measuring mask shall have a thickness of 2 mm and a circular aperture of diameter d such that the area is 80 % to 100 % of the active area of the photo diode.

The surface of the mask shall be matt black.

The test piece shall be held firmly against the mask to cover the aperture and to ensure that no ambient light leaks past.

D.2.4 Optical path (figure D.1)

The optical path shall be perpendicular to the mask. The distance from the emitting surface of the LED to the mask shall be

Copyright International Organization for Standardization
Provided by IHS under license with ISO
No reproduction or networking permitted without license from IHS
Not for Resale

$$L = \frac{d}{2 \tan \alpha}$$

where α is the angle where the relative intensity of the LED is equal to, or greater than, 95% of the maximum intensity of the optical axis.

D.2.5 Finish

The whole assembly shall be enclosed in a matt black case.

D.2.6 Measuring circuitry (figure D.2)

The components of the measuring circuitry are

E	: regulated power supply with variable output voltage
R	: current-limiting resistor
LED	: light-emitting diode
Di	: silicon photo diode
A	: operational amplifier
R_{f0}, R_{f1}	: feedback resistors
S	: gain switch
V	: voltmeter

The forward current of the LED, and consequently its radiation power, can be varied by means of the power supply E.

Di is operating in the short circuit mode.

The output voltage of the operational amplifier is given by

$V_0 = I_k \times R_f$ where I_k is the short-circuit current of Di.

The output voltage is therefore a linear function of the light intensity.

R_{f0} and R_{f1} shall be low temperature-drift resistors with an accuracy of 1 %. The following ratio applies

$$\frac{R_{f0}}{R_{f1}} = \frac{1}{20}$$

D.3 Measuring method

D.3.1 Set switch S to position 0.

D.3.2 With no test piece mounted vary the supply voltage of E until voltmeter V reads full scale (100 %).

D.3.3 Mount a leader or trailer tape on the mask. The reading of the voltmeter shall be in the range 60 % to 100 %.

D.3.4 Mount a test piece of magnetic tape on the mask. Set switch S to position 1. Full deflection of the voltmeter now represents a light transmittance of 5 %.

Copyright International Organization for Standardization
Provided by IHS under license with ISO
No reproduction or networking permitted without license from IHS
Not for Resale

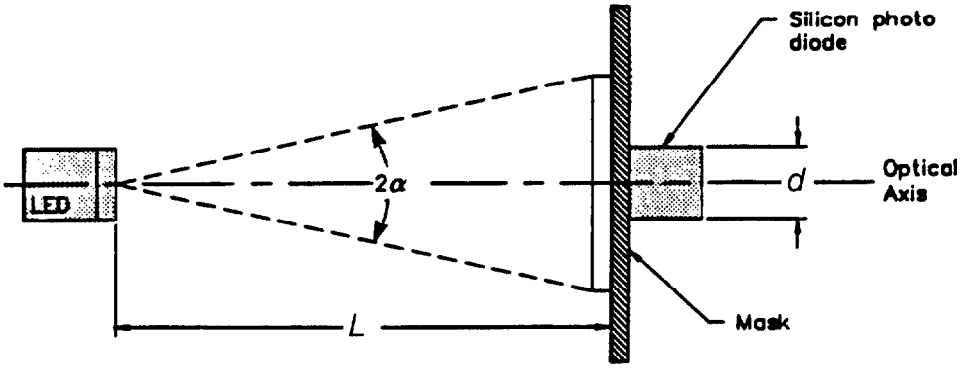

Figure D.1 - Optical arrangement

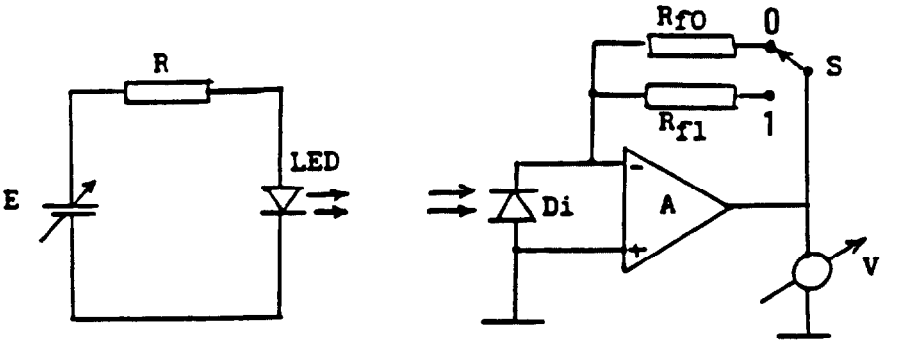

Figure D.2 - Measuring circuitry

Copyright International Organization for Standardization
Provided by IHS under license with ISO
No reproduction or networking permitted without license from IHS
Not for Resale

Annex E

(normative)

Measurement of Signal to Noise Ratio

The Signal-to-Noise Ratio shall be measured using a spectrum analyzer with a resolution bandwidth of 10 kHz.

Unless otherwise stated, the Test Conditions are those defined in clause 8 of this International Standard.

E.1 a.c. erase the tape to be tested.

E.2 Record the tape at 3 002 ftpmm.

E.3 Measure the Average Signal Amplitude (S_{tape}).

E.4 Measure the total noise level (N_{total}) at 3,7 MHz.

E.5 Measure the read channel noise level (N_{amp}) at 3,7 MHz without a tape loaded but with the motors running.

Tape noise: $N_{tape} = \sqrt{N_{total}^2 - N_{amp}^2}$

$\frac{N_{amp}}{N_{tape}}$ shall be less than 70 %.

The Signal-to-Noise Ratio is 20 lg $\frac{S_{tape}}{N_{tape}}$ in decibels

E.6 Take the average of at least 64 successive tests to determine the Signal-to-Noise Ratio for the tape (S/N_{tape}).

E.7 Repeat E.1 to E.6 for the Secondary Standard Reference Tape, to give S/N_{MSRT}.

The Signal-to-Noise Ratio Characteristic is

$$(S/N_{tape} - S/N_{MSRT}) \quad \text{in decibels}$$

Copyright International Organization for Standardization
Provided by IHS under license with ISO
No reproduction or networking permitted without license from IHS
Not for Resale

Annex F

(normative)

Method for determining the nominal and the maximum allowable recorded levels

The following tests shall be carried out under the conditions defined in clause 8 of this International Standard.

F.1 Method for determining the Nominal Recorded Level

F.1.1 Read the section of the Secondary Standard Amplitude Calibration Tape that has been recorded at 1 501 ftpmm. Note the read output and apply the appropriate calibration factor.

F.1.2 a.c. erase the Secondary Standard Reference Tape and record at 1 501 ftpmm, increasing the write current from a low value until the output on read equals, after applying the appropriate calibration factor, the value noted in F.1.1.

F.1.3 a.c. erase the interchange tape and record at 1 501 ftpmm with the current determined in F.1.2.

The read output from this tape is the Nominal Recorded Level for the physical recording density of 1 501 ftpmm.

F.1.4 Repeat F.1.1 to F.1.3 for the physical recording densities of 83,4 ftpmm, 333,6 ftpmm, 500,4 ftpmm and 1 001 ftpmm.

F.2 Method for determining the Maximum Allowable Recorded Level

F.2.1 a.c. erase the Secondary Standard Reference Tape and record at 1 501 ftpmm, increasing the write current until the output on read equals, after applying the appropriate calibration factor, 118,9 % of the value noted in F.1.1.

F.2.2 a.c. erase the interchange tape and record at 1 501 ftpmm with the current determined in F.2.1.

The read output from this tape is the Maximum Allowable Recorded Level for the physical recording density of 1 501 ftpmm.

F.2.3 Repeat F.2.1 and F.2.2 for the physical recording densities of 333,6 ftpmm, 500,4 ftpmm and 1 001 ftpmm.

Copyright International Organization for Standardization
Provided by IHS under license with ISO
No reproduction or networking permitted without license from IHS
Not for Resale

F.3 Limits for the recorded levels

As a history of excessive recording levels can impair the operation of the recording system used in this International Standard it is necessary to prescribe limits for the recording levels to which the tape has been subjected since the last bulk erasure and for the levels used when recording a tape for interchange. These levels are as follows:

At the physical recording density of 83,4 ftpmm:

- the Nominal Recorded Level.

At the physical recording densities of 333,6 ftpmm, 500,4 ftpmm, 1 001 ftpmm and 1 501 ftpmm:

- the Maximum Allowable Recorded Level.

NOTE - It is recommended that a tape to be used for interchange should not have been previously recorded at levels higher than its Nominal Recorded Levels at the physical recording densities of 333,6 ftpmm, 500,4 ftpmm, 1 001 ftpmm and 1 501 ftpmm.

Copyright International Organization for Standardization
Provided by IHS under license with ISO
No reproduction or networking permitted without license from IHS
Not for Resale

Annex G

(normative)

Representation of 8-bit bytes by 10-bit patterns

G.1 The 8-bit bytes are represented with the most significant bit to the left and the least significant bit to the right.

The 10-bit patterns are represented with the bit recorded first to the left and the bit recorded last to the right.

G.2 The magnetic recording system chosen requires that the d.c. level of the recorded signals be maintained near zero.

All 10-bit patterns are either balanced to zero or have a d.c. imbalance of 6:4 or 4:6.

Each 10-bit pattern is accompanied by an indicator Q which instructs the translator which of the two alternative patterns should be selected for the next 10-bit pattern in order to maintain the lowest d.c. level.

Q' is the d.c. information of the previous pattern.

Q is the d.c. information of the current pattern.

G.3 The left-hand column indicates the hexadecimal notation of the 8-bit byte for ease of search.

Copyright International Organization for Standardization
Provided by IHS under license with ISO
No reproduction or networking permitted without license from IHS
Not for Resale

		Q' = − 1			Q' = 1		
	8-bit byte	10-Channel bit pattern	DC	Q	10-Channel bit pattern	DC	Q
00	00000000	0101010101	0	1	0101010101	0	− 1
01	00000001	0101010111	0	− 1	0101010111	0	1
02	00000010	0101011101	0	− 1	0101011101	0	1
03	00000011	0101011111	0	1	0101011111	0	− 1
04	00000100	0101001001	0	− 1	0101001001	0	1
05	00000101	0101001011	0	1	0101001011	0	− 1
06	00000110	0101001110	0	1	0101001110	0	− 1
07	00000111	0101011010	0	1	0101011010	0	− 1
08	00001000	0101110101	0	− 1	0101110101	0	1
09	00001001	0101110111	0	1	0101110111	0	− 1
0A	00001010	0101111101	0	1	0101111101	0	− 1
0B	00001011	0101111111	0	− 1	0101111111	0	1
0C	00001100	0101101001	0	1	0101101001	0	− 1
0D	00001101	0101101011	0	− 1	0101101011	0	1
0E	00001110	0101101110	0	− 1	0101101110	0	1
0F	00001111	0101111010	0	− 1	0101111010	0	1
10	00010000	1101010010	0	1	1101010010	0	− 1
11	00010001	0100010010	2	− 1	1100010010	− 2	− 1
12	00010010	0101010010	0	− 1	0101010010	0	1
13	00010011	0101110010	0	1	0101110010	0	− 1
14	00010100	1101110001	2	1	0101110001	− 2	1
15	00010101	1101110011	2	− 1	0101110011	− 2	− 1
16	00010110	1101110110	2	− 1	0101110110	− 2	− 1
17	00010111	1101110010	0	− 1	1101110010	0	1
18	00011000	0101100101	2	− 1	1101100101	− 2	− 1
19	00011001	0101100111	2	1	1101100111	− 2	1
1A	00011010	0101101101	2	1	1101101101	− 2	1
1B	00011011	0101101111	2	− 1	1101101111	− 2	− 1
1C	00011100	0101111001	2	1	1101111001	− 2	1
1D	00011101	0101111011	2	− 1	1101111011	− 2	− 1
1E	00011110	0101111110	2	− 1	1101111110	− 2	− 1
1F	00011111	0101101010	2	− 1	1101101010	− 2	− 1
20	00100000	0111010101	0	− 1	0111010101	0	1
21	00100001	0111010111	0	1	0111010111	0	− 1
22	00100010	0111011101	0	1	0111011101	0	− 1
23	00100011	0111011111	0	− 1	0111011111	0	1
24	00100100	1111010001	2	1	0111010001	− 2	1
25	00100101	1111010011	2	− 1	0111010011	− 2	− 1
26	00100110	1111010110	2	− 1	0111010110	− 2	− 1
27	00100111	0111011010	0	− 1	0111011010	0	1
28	00101000	0111110101	0	1	0111110101	0	− 1
29	00101001	0111110111	0	− 1	0111110111	0	1
2A	00101010	0111111101	0	− 1	0111111101	0	1
2B	00101011	0111111111	0	1	0111111111	0	− 1
2C	00101100	0111101001	0	− 1	0111101001	0	1
2D	00101101	0111101011	0	1	0111101011	0	− 1
2E	00101110	0111101110	0	1	0111101110	0	− 1
2F	00101111	0111111010	0	1	0111111010	0	− 1
30	00110000	0111010010	0	1	0111010010	0	− 1
31	00110001	1110010010	2	− 1	0110010010	− 2	− 1
32	00110010	1111010010	0	− 1	1111010010	0	1
33	00110011	1111110010	0	1	1111110010	0	− 1
34	00110100	0111110001	2	1	1111110001	− 2	1
35	00110101	0111110011	2	− 1	1111110011	− 2	− 1
36	00110110	0111110110	2	− 1	1111110110	− 2	− 1
37	00110111	0111110010	0	− 1	0111110010	0	1

Copyright International Organization for Standardization
Provided by IHS under license with ISO
No reproduction or networking permitted without license from IHS
Not for Resale

		Q' = – 1			Q' = 1		
	8-bit byte	10 Channel bit pattern	DC	Q	10 Channel bit pattern	DC	Q
38	00111000	0111000101	2	– 1	1111000101	– 2	– 1
39	00111001	0111000111	2	1	1111000111	– 2	1
3A	00111010	0111001101	2	1	1111001101	– 2	1
3B	00111011	0111001111	2	– 1	1111001111	– 2	– 1
3C	00111100	0111011001	2	1	1111011001	– 2	1
3D	00111101	0111011011	2	– 1	1111011011	– 2	– 1
3E	00111110	0111011110	2	– 1	1111011110	– 2	– 1
3F	00111111	0111001010	2	– 1	1111001010	– 2	– 1
40	01000000	0100010101	2	1	1100010101	– 2	1
41	01000001	0100010111	2	– 1	1100010111	– 2	– 1
42	01000010	0100011101	2	– 1	1100011101	– 2	– 1
43	01000011	0100011111	2	1	1100011111	– 2	1
44	01000100	0101010001	2	1	1101010001	– 2	1
45	01000101	0101010011	2	– 1	1101010011	– 2	– 1
46	01000110	0101010110	2	– 1	1101010110	– 2	– 1
47	01000111	0100011010	2	1	1100011010	– 2	1
48	01001000	0100110101	2	– 1	1100110101	– 2	– 1
49	01001001	0100110111	2	1	1100110111	– 2	1
4A	01001010	0100111101	2	1	1100111101	– 2	1
4B	01001011	0100111111	2	– 1	1100111111	– 2	– 1
4C	01001100	0100101001	2	1	1100101001	– 2	1
4D	01001101	0100101011	2	– 1	1100101011	– 2	– 1
4E	01001110	0100101110	2	– 1	1100101110	– 2	– 1
4F	01001111	0100111010	2	– 1	1100111010	– 2	– 1
50	01010000	0100100101	0	– 1	0100100101	0	1
51	01010001	0100100111	0	1	0100100111	0	– 1
52	01010010	0100101101	0	1	0100101101	0	– 1
53	01010011	0100101111	0	– 1	0100101111	0	1
54	01010100	0100111001	0	1	0100111001	0	– 1
55	01010101	0100111011	0	– 1	0100111011	0	1
56	01010110	0100111110	0	– 1	0100111110	0	1
57	01010111	0100101010	0	– 1	0100101010	0	1
58	01011000	0110100101	0	1	0110100101	0	– 1
59	01011001	0110100111	0	– 1	0110100111	0	1
5A	01011010	0110101101	0	– 1	0110101101	0	1
5B	01011011	0110101111	0	1	0110101111	0	– 1
5C	01011100	0110111001	0	– 1	0110111001	0	1
5D	01011101	0110111011	0	1	0110111011	0	– 1
5E	01011110	0110111110	0	1	0110111110	0	– 1
5F	01011111	0110101010	0	1	0110101010	0	– 1
60	01100000	0010010101	0	– 1	0010010101	0	1
61	01100001	0010010111	0	1	0010010111	0	– 1
62	01100010	0010011101	0	1	0010011101	0	– 1
63	01100011	0010011111	0	– 1	0010011111	0	1
64	01100100	1010010001	2	1	0010010001	– 2	1
65	01100101	1010010011	2	– 1	0010010011	– 2	– 1
66	01100110	1010010110	2	– 1	0010010110	– 2	– 1
67	01100111	0010011010	0	– 1	0010011010	0	1
68	01101000	0010110101	0	1	0010110101	0	– 1
69	01101001	0010110111	0	– 1	0010110111	0	1
6A	01101010	0010111101	0	– 1	0010111101	0	1
6B	01101011	0010111111	0	1	0010111111	0	– 1
6C	01101100	0010101001	0	– 1	0010101001	0	1
6D	01101101	0010101011	0	1	0010101011	0	– 1
6E	01101110	0010101110	0	1	0010101110	0	– 1
6F	01101111	0010111010	0	1	0010111010	0	– 1

Copyright International Organization for Standardization
Provided by IHS under license with ISO
No reproduction or networking permitted without license from IHS
Not for Resale

	8-bit byte	Q' = −1: 10 Channel bit pattern	DC	Q	Q' = 1: 10-Channel bit pattern	DC	Q
70	01110000	0010010010	0	1	0010010010	0	−1
71	01110001	1011010010	2	−1	0011010010	−2	−1
72	01110010	1010010010	0	−1	1010010010	0	1
73	01110011	1010110010	0	1	1010110010	0	−1
74	01110100	0010110001	2	1	1010110001	−2	1
75	01110101	0010110011	2	−1	1010110011	−2	−1
76	01110110	0010110110	2	−1	1010110110	−2	−1
77	01110111	0010110010	0	−1	0010110010	0	1
78	01111000	0011100101	0	1	0011100101	0	−1
79	01111001	0011100111	0	−1	0011100111	0	1
7A	01111010	0011101101	0	−1	0011101101	0	1
7B	01111011	0011101111	0	1	0011101111	0	−1
7C	01111100	0011111001	0	−1	0011111001	0	1
7D	01111101	0011111011	0	1	0011111011	0	−1
7E	01111110	0011111110	0	1	0011111110	0	−1
7F	01111111	0011101010	0	1	0011101010	0	−1
80	10000000	1010010101	0	1	1010010101	0	−1
81	10000001	1010010111	0	−1	1010010111	0	1
82	10000010	1010011101	0	−1	1010011101	0	1
83	10000011	1010011111	0	1	1010011111	0	−1
84	10000100	1010001001	0	−1	1010001001	0	1
85	10000101	1010001011	0	1	1010001011	0	−1
86	10000110	1010001110	0	1	1010001110	0	−1
87	10000111	1010011010	0	1	1010011010	0	−1
88	10001000	1010110101	0	−1	1010110101	0	1
89	10001001	1010110111	0	1	1010110111	0	−1
8A	10001010	1010111101	0	1	1010111101	0	−1
8B	10001011	1010111111	0	−1	1010111111	0	1
8C	10001100	1010101001	0	1	1010101001	0	−1
8D	10001101	1010101011	0	−1	1010101011	0	1
8E	10001110	1010101110	0	−1	1010101110	0	1
8F	10001111	1010111010	0	−1	1010111010	0	1
90	10010000	1100100101	0	1	1100100101	0	−1
91	10010001	1100100111	0	−1	1100100111	0	1
92	10010010	1100101101	0	−1	1100101101	0	1
93	10010011	1100101111	0	1	1100101111	0	−1
94	10010100	1100111001	0	−1	1100111001	0	1
95	10010101	1100111011	0	1	1100111011	0	−1
96	10010110	1100111110	0	1	1100111110	0	−1
97	10010111	1100101010	0	1	1100101010	0	−1
98	10011000	1010100101	2	−1	0010100101	−2	−1
99	10011001	1010100111	2	1	0010100111	−2	1
9A	10011010	1010101101	2	1	0010101101	−2	1
9B	10011011	1010101111	2	−1	0010101111	−2	−1
9C	10011100	1010111001	2	1	0010111001	−2	1
9D	10011101	1010111011	2	−1	0010111011	−2	−1
9E	10011110	1010111110	2	−1	0010111110	−2	−1
9F	10011111	1010101010	2	−1	0010101010	−2	−1
A0	10100000	1011010101	2	1	0011010101	−2	1
A1	10100001	1011010111	2	−1	0011010111	−2	−1
A2	10100010	1011011101	2	−1	0011011101	−2	−1
A3	10100011	1011011111	2	1	0011011111	−2	1
A4	10100100	1011001001	2	−1	0011001001	−2	−1
A5	10100101	1011001011	2	1	0011001011	−2	1
A6	10100110	1011001110	2	1	0011001110	−2	1
A7	10100111	1011011010	2	1	0011011010	−2	1

Copyright International Organization for Standardization
Provided by IHS under license with ISO
No reproduction or networking permitted without license from IHS
Not for Resale

	8-bit byte	Q' = −1: 10-Channel bit pattern	DC	Q	Q' = 1: 10 Channel bit pattern	DC	Q
A8	10101000	1011110101	2	−1	0011110101	−2	−1
A9	10101001	1011110111	2	1	0011110111	−2	1
AA	10101010	1011111101	2	1	0011111101	−2	1
AB	10101011	1011111111	2	−1	0011111111	−2	−1
AC	10101100	1011101001	2	1	0011101001	−2	1
AD	10101101	1011101011	2	−1	0011101011	−2	−1
AE	10101110	1011101110	2	−1	0011101110	−2	−1
AF	10101111	1011111010	2	−1	0011111010	−2	−1
B0	10110000	1101110101	0	1	1101110101	0	−1
B1	10110001	1101110111	0	−1	1101110111	0	1
B2	10110010	1101111101	0	−1	1101111101	0	1
B3	10110011	1101111111	0	1	1101111111	0	−1
B4	10110100	1101101001	0	−1	1101101001	0	1
B5	10110101	1101101011	0	1	1101101011	0	−1
B6	10110110	1101101110	0	1	1101101110	0	−1
B7	10110111	1101111010	0	1	1101111010	0	−1
B8	10111000	1011100101	0	−1	1011100101	0	1
B9	10111001	1011100111	0	1	1011100111	0	−1
BA	10111010	1011101101	0	1	1011101101	0	−1
BB	10111011	1011101111	0	−1	1011101111	0	1
BC	10111100	1011111001	0	1	1011111001	0	−1
BD	10111101	1011111011	0	−1	1011111011	0	1
BE	10111110	1011111110	0	−1	1011111110	0	1
BF	10111111	1011101010	0	−1	1011101010	0	1
C0	11000000	1110010101	2	1	0110010101	−2	1
C1	11000001	1110010111	2	−1	0110010111	−2	−1
C2	11000010	1110011101	2	−1	0110011101	−2	−1
C3	11000011	1110011111	2	1	0110011111	−2	1
C4	11000100	1110001001	2	−1	0110001001	−2	−1
C5	11000101	1110001011	2	1	0110001011	−2	1
C6	11000110	1110001110	2	1	0110001110	−2	1
C7	11000111	1110011010	2	1	0110011010	−2	1
C8	11001000	1110110101	2	−1	0110110101	−2	−1
C9	11001001	1110110111	2	1	0110110111	−2	1
CA	11001010	1110111101	2	1	0110111101	−2	1
CB	11001011	1110111111	2	−1	0110111111	−2	−1
CC	11001100	1110101001	2	1	0110101001	−2	1
CD	11001101	1110101011	2	−1	0110101011	−2	−1
CE	11001110	1110101110	2	−1	0110101110	−2	−1
CF	11001111	1110111010	2	−1	0110111010	−2	−1
D0	11010000	1101000101	2	−1	0101000101	−2	−1
D1	11010001	1101000111	2	1	0101000111	−2	1
D2	11010010	1101001101	2	1	0101001101	−2	1
D3	11010011	1101001111	2	−1	0101001111	−2	−1
D4	11010100	1101011001	2	1	0101011001	−2	1
D5	11010101	1101011011	2	−1	0101011011	−2	−1
D6	11010110	1101011110	2	−1	0101011110	−2	−1
D7	11010111	1101001010	2	−1	0101001010	−2	−1
D8	11011000	1110100101	0	−1	1110100101	0	1
D9	11011001	1110100111	0	1	1110100111	0	−1
DA	11011010	1110101101	0	1	1110101101	0	−1
DB	11011011	1110101111	0	−1	1110101111	0	1
DC	11011100	1110111001	0	1	1110111001	0	−1
DD	11011101	1110111011	0	−1	1110111011	0	1
DE	11011110	1110111110	0	−1	1110111110	0	1
DF	11011111	1110101010	0	−1	1110101010	0	1

Copyright International Organization for Standardization
Provided by IHS under license with ISO
No reproduction or networking permitted without license from IHS
Not for Resale

		Q' = – 1			Q' = 1		
	8-bit byte	10 Channel bit pattern	DC	Q	10 Channel bit pattern	DC	Q
E0	11100000	1111010101	0	1	1111010101	0	– 1
E1	11100001	1111010111	0	– 1	1111010111	0	1
E2	11100010	1111011101	0	– 1	1111011101	0	1
E3	11100011	1111011111	0	1	1111011111	0	– 1
E4	11100100	1111001001	0	– 1	1111001001	0	1
E5	11100101	1111001011	0	1	1111001011	0	– 1
E6	11100110	1111001110	0	1	1111001110	0	– 1
E7	11100111	1111011010	0	1	1111011010	0	– 1
E8	11101000	1111110101	0	– 1	1111110101	0	1
E9	11101001	1111110111	0	1	1111110111	0	– 1
EA	11101010	1111111101	0	1	1111111101	0	– 1
EB	11101011	1111111111	0	– 1	1111111111	0	1
EC	11101100	1111101001	0	1	1111101001	0	– 1
ED	11101101	1111101011	0	– 1	1111101011	0	1
EE	11101110	1111101110	0	– 1	1111101110	0	1
EF	11101111	1111111010	0	– 1	1111111010	0	1
F0	11110000	1101010101	0	– 1	1101010101	0	1
F1	11110001	1101010111	0	1	1101010111	0	– 1
F2	11110010	1101011101	0	1	1101011101	0	– 1
F3	11110011	1101011111	0	– 1	1101011111	0	1
F4	11110100	1101001001	0	1	1101001001	0	– 1
F5	11110101	1101001011	0	– 1	1101001011	0	1
F6	11110110	1101001110	0	– 1	1101001110	0	1
F7	11110111	1101011010	0	– 1	1101011010	0	1
F8	11111000	1111100101	2	– 1	0111100101	– 2	– 1
F9	11111001	1111100111	2	1	0111100111	– 2	1
FA	11111010	1111101101	2	1	0111101101	– 2	1
FB	11111011	1111101111	2	– 1	0111101111	– 2	– 1
FC	11111100	1111111001	2	1	0111111001	– 2	1
FD	11111101	1111111011	2	– 1	0111111011	– 2	– 1
FE	11111110	1111111110	2	– 1	0111111110	– 2	– 1
FF	11111111	1111101010	2	– 1	0111101010	– 2	– 1

Copyright International Organization for Standardization
Provided by IHS under license with ISO
No reproduction or networking permitted without license from IHS
Not for Resale

Annex H

(normative)

Measurement of bit shift

The tape to be measured shall have been written by the tape drive used for data interchange.

The tape shall have been written in any mode compatible with system operation.

H.1 Reading equipment

The tape shall be read on any drive which supports a track linearity within 6,0 µm when measured according to annex K.

There are no absolute requirements placed on the output voltage of the head. However, the head design, the rotary transformer, the pre-amplifier and the head-to-tape speed shall be chosen so as to avoid problems due to a low signal-to-noise ratio.

- **Read Head**

Gap length	0,25 µm ± 0,03 µm
Track width	20 µm ± 2 µm
Angle of the head gap	The gap in the head of positive azimuth shall make an angle of + 20° 0' ± 12' with the axis of the scanner. The gap in the head of negative azimuth shall make an angle of - 20°0' ± 12' with the axis of the scanner.

- **Read Channel**

The overall frequency response of the head, the rotary transformer and the pre-amplifier, when tested with a wire placed close and parallel to the read gap, shall be within 2 dB in amplitude response and within 5° in phase response, of the transfer function specified below, over the frequency range corresponding to 1/94 of the ONEs frequency to 1,5 times the ONEs frequency.

NOTE - The transfer function is defined with the first-order low frequency cut-off point related to the coupling time-constant at the input to the pre-amplifier, and the second-order high frequency cut-off point related to the inductance and capacitance of the head, rotary transformer and pre-amplifier.

$$G(S) = \frac{KS^2\omega_c^2}{\omega_a(S+\omega_b)(S^2+\frac{\omega_c}{Q}S+\omega_c^2)}$$

where:

$K \geq 1$

$\omega_i = 2\pi f_i$

f_a = ONEs frequency

Copyright International Organization for Standardization
Provided by IHS under license with ISO
No reproduction or networking permitted without license from IHS
Not for Resale

$f_b \leq 1/94$ of the ONEs frequency
$f_c \geq 1{,}5$ times the ONEs frequency
$0{,}7 \leq Q \leq 1{,}0$

Equalizer

The equalizer connected to the output of the pre-amplifier shall have the following characteristic.

$$G(S) = \frac{K\omega_L^4 S\,(S-\omega_P)(S^2-\omega_N^2)}{(S+\omega_H)(S+\omega_P)(S^2+\frac{\omega_N}{Q_N}S+\omega_N^2)(S^2+\frac{\omega_L}{Q_1}S+\omega_L^2)(S^2+\frac{\omega_L}{Q_2}S+\omega_L^2)}$$

where:

$K \geq 5$
$\omega_i = 2\pi f_i$
f_H = 1/200 of the ONEs frequency
f_P = 2/3 of the ONEs frequency
f_N = 1/4 of the ONEs frequency
f_L = ONEs frequency
$Q_N = 0{,}12$
$Q_1 = 2{,}0$
$Q_2 = 0{,}5$

H.2 Measurement

The average bit cell length (L) is obtained from any pair of reference zero crossings (RZC) located on either side of the test zero crossing (TZC). A reference zero crossing is a ONE zero crossing with at least two adjacent ONE zero crossings on each side. The bits on either side of these ONE zero crossings can be either ZEROs or ONEs.

The RZCs shall not be more than 40 bit cells apart in order to keep the maximum error due to the rate of change below 2 %.

The requirements for bit shift specified in 10.5 shall be met for any pattern of ZEROs and ONEs in the bit cells between the TZC and the RZCs.

Copyright International Organization for Standardization
Provided by IHS under license with ISO
No reproduction or networking permitted without license from IHS
Not for Resale

H.3 Data analysis

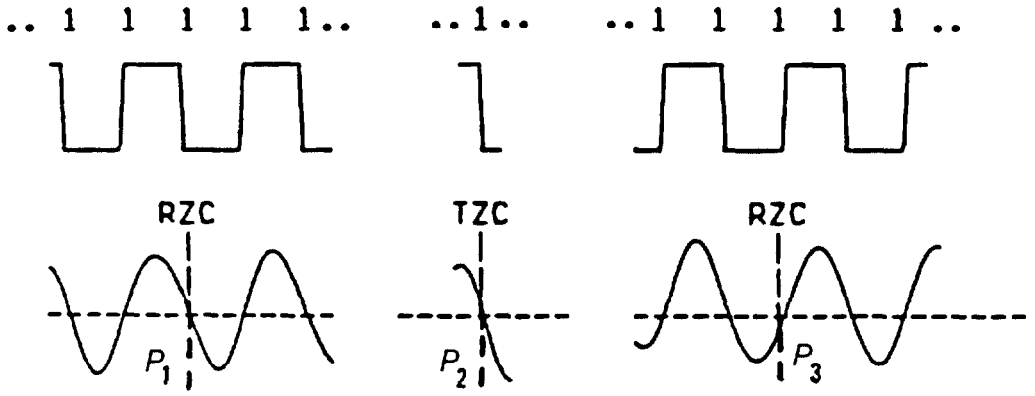

if n is the number of bit cells between reference zero crossings, the average bit cell length is

$$L = \frac{P_3 - P_1}{n}$$

where

P_n is the position of the n-th ONE zero crossing.

If there are m bit intervals between the first reference zero crossing and the test zero crossing, then

$$\text{Bit shift in percent} = \frac{|\, mL - (P_2 - P_1) \,|}{L} \times 100$$

--`,,```,,,,````-`-`,,`,,`,`,,`---
Copyright International Organization for Standardization
Provided by IHS under license with ISO
No reproduction or networking permitted without license from IHS
Not for Resale

Annex J

(informative)

Recommendations for transportation

J.1 Environment

It is recommended that during transportation the cartridges are kept within the following conditions:

temperature : - 40 °C to 45 °C

relative humidity : 5 % to 80 %

wet bulb temperature : 26 °C max.

There shall be no condensation in or on the cartridge.

J.2 Hazards

Transportation of recorded cartridges involves three basic potential hazards.

J.2.1 Impact loads and vibration

The following recommendations should minimize damage during transportation.

a) Avoid mechanical loads that would distort the cartridge shape.

b) Avoid dropping the cartridge more than 1 m.

c) Cartridges should be fitted into a rigid box containing adequate shock-absorbent material.

d) The final box must have a clean interior and a construction that provides sealing to prevent the ingress of dirt and water.

e) The orientation of the cartridges within the final box should be such that the axes of the tape reels are horizontal.

f) The final box should be clearly marked to indicate its correct orientation.

J.2.2 Extremes of temperature and humidity

i) Extreme changes in temperature and humidity should be avoided whenever possible.

ii) Whenever a cartridge is received it should be conditioned in the operating environment for a period of at least 24 h.

J.2.3 Effects of stray magnetic fields

A nominal spacing of not less than 80 mm should exist between the cartridge and the outer surface of the shipping container. This should minimize the risk of corruption.

Copyright International Organization for Standardization
Provided by IHS under license with ISO
No reproduction or networking permitted without license from IHS
Not for Resale

Annex K

(normative)

Method of measuring track edge linearity

K.1 Procedure

In order to measure the track edge linearity the following procedure shall be followed.

a) Identify the intersection of the track edge with a line parallel to the Tape Reference Edge and at a distance d = 1,898 mm from it.

b) Place a rectangular box of 8 µm x 20,88 mm centred on this intersection, and with its longitudinal axis at an angle $\alpha = 6°22'59,5''$ with the Tape Reference Edge.

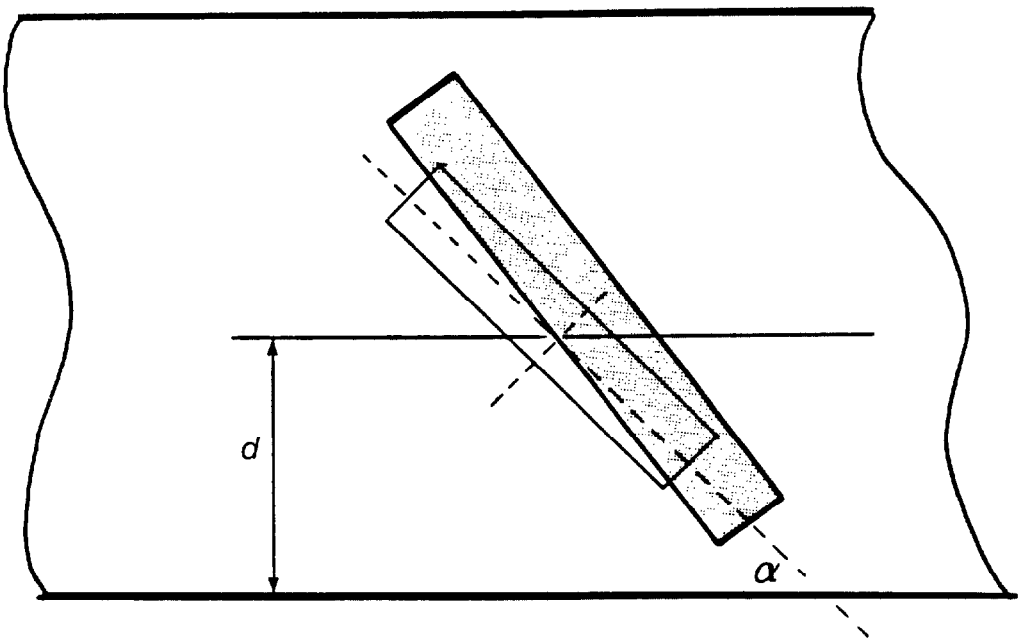

Figure K.1 - Track edge linearity

K.2 Requirement

The track edge shall intersect the short sides of the box only.

Copyright International Organization for Standardization
Provided by IHS under license with ISO
No reproduction or networking permitted without license from IHS
Not for Resale

Annex L

(informative)

Read-After-Write

Read-After-Write (RAW) is a technique by which a frame is read immediately after being written, examined to determine if it was written successfully, and re-written if not. The unit of RAW is a frame. The RAW technique is applicable only in the Data Area of a tape, and is not applied to Amble Frames. Where RAW is applicable, it may be applied or not applied to individual frames, regardless of whether or not it is applied to other frames. When a frame is identified, during a Read-After-Write check, as having been unsuccessfully written, it is rewritten further along the tape, i.e. the original frame is not overwritten by the re-written frame.

The primary intent of the RAW check is the detection of frames containing errors of significant size and/or quantity, e.g. as caused by non-trivial media defects. Consequently, where RAW is applied it is not necessary that all channel bits be read correctly to avoid a re-write. Instead, the minimum requirement needs to be only that the quality of the recording and the quantity of correctly decoded data is such that the data of the entire frame is recoverable with sufficient margin for reliable data interchange.

The actual performance of a frame against this requirement can be assessed in a number of ways, for example by measuring the length, severity and/or distribution of missing pulses, counting the number of errors detected by C1 and/or C2, comparing written and read checksums, comparing written and read data on a sampled or full time basis.

Where a frame has been rewritten multiple instances of it will exist. It is possible that a subsequent read will successfully recover data from more than one instance of a frame. In such case, it is recommended that the last successfully recovered instance be used, since previous ones may have been considered unsuccessfully written.

Copyright International Organization for Standardization
Provided by IHS under license with ISO
No reproduction or networking permitted without license from IHS
Not for Resale

Annex M

(informative)

Example of the content of a Basic Group No. 0

Byte Position	Field Name	Description of Contents
1-128	Name of Manufacturer	Name of the manufacturer of the drive that initialized or wrote the partition.
129-160	Model Number	Model number or identifier of the drive that initialized or wrote the partition.
161-192	Serial Number	Serial number assigned to the drive.
193-224	Revision number	Revision numbers of drive components: 193-200 Sub-assembly 1 201-208 Sub-assembly 2 209-216 Sub-assembly 3 217-224 Sub-assembly 4
225-256	Host Interface Type and Address	Type of host interface, e.g. SCSI and connection address. 225-240 Host Interface Type 241-256 Address
257-272	Date and Time YYMMDDHHMMSS	Date and time the partition was initialized 257-258 YY year = 1980 + YY 259-260 MM month 261-262 DD day 263-264 HH hour 265-266 MM minutes 267-268 SS seconds
273-400	Tape Label or Identifier	An indicator of the partition's content.
401-5756	Reserved	All bytes set to (00)
5757-126632	Manufacturer's data	Not specified

Figure M.1 - Example of a Basic Group No. 0

All entries in byte positions 1 to 400 are followed by (00) and the remainder of the field is padded with (00).

Copyright International Organization for Standardization
Provided by IHS under license with ISO
No reproduction or networking permitted without license from IHS
Not for Resale

Annex N

(informative)

Registration of algorithms

It is expected that algorithms which are registered by the scheme in ISO/IEC 11576 will be allocated identifiers in the range 2 to 2^{32}-1, except that the number 255 will not be used as an identifier.

In the format specified by this International Standard, a single byte in the entity header specifies the algorithm identifier. Therefore, this format supports only those registered algorithms which have an identifier in the range 2 to 254.

The value 255 in the algorithm identifier field in the entity header indicates that the algorithm used is not registered.

Cartridges that were written prior to the registration of compression algorithms may have an identifier value set to 000 instead of the registered value for the algorithm that was applied when the cartridge was actually written.

Copyright International Organization for Standardization
Provided by IHS under license with ISO
No reproduction or networking permitted without license from IHS
Not for Resale

UDC 681.327.636

Descriptors: data processing, information interchange, data recording, magnetic recording, data storage devices, magnetic tapes, magnetic tape cartridges, specifications, dimensions, formats, interchangeability.

Price based on 102 pages

--`,,```,,,,````-`-`,,`,,`,`,,`---

Copyright International Organization for Standardization
Provided by IHS under license with ISO
No reproduction or networking permitted without license from IHS

Not for Resale